KX450F

Motorcycle
Service Manual

Kawasaki

Quick Reference Guide

General Information	1
Periodic Maintenance	2
Fuel System (DFI)	3
Cooling System	4
Engine Top End	5
Clutch	6
Engine Lubrication System	7
Engine Removal/Installation	8
Crankshaft/Transmission	9
Wheels/Tires	10
Final Drive	11
Brakes	12
Suspension	13
Steering	14
Frame	15
Electrical System	16
Appendix	17

This quick reference guide will assist you in locating a desired topic or procedure.

- Bend the pages back to match the black tab of the desired chapter number with the black tab on the edge at each table of contents page.
- Refer to the sectional table of contents for the exact pages to locate the specific topic required.

Kawasaki

KX450F

Motorcycle Service Manual

All rights reserved. No parts of this publication may be reproduced, stored in a retrieval system, or transmitted in any form or by any means, electronic mechanical photocopying, recording or otherwise, without the prior written permission of Quality Assurance Division/Motorcycle & Engine Company/Kawasaki Heavy Industries, Ltd., Japan.

No liability can be accepted for any inaccuracies or omissions in this publication, although every possible care has been taken to make it as complete and accurate as possible.

The right is reserved to make changes at any time without prior notice and without incurring an obligation to make such changes to products manufactured previously. See your Motorcycle dealer for the latest information on product improvements incorporated after this publication.

All information contained in this publication is based on the latest product information available at the time of publication. Illustrations and photographs in this publication are intended for reference use only and may not depict actual model component parts.

© 2015 Kawasaki Heavy Industries, Ltd.

First Edition (0) : May 22, 2015

LIST OF ABBREVIATIONS

A	ampere(s)	in.	inch(es)
ABDC	after bottom dead center	KDS	Kawasaki Diagnostic System
AC	alternating current	km/h	kilometers per hour
Ah	ampere hour	L	liter(s)
ATDC	after top dead center	lb	pound(s)
BBDC	before bottom dead center	LED	Light Emitting Diode
BDC	bottom dead center	m	meter(s)
BTDC	before top dead center	min	minute(s)
°C	degree(s) Celsius	mph	miles per hour
cmHg	centimeters of mercury	N	newton(s)
CPU	Central Processing Unit	oz	ounce(s)
cu in	cubic inch(es)	Pa	pascal(s)
DC	direct current	PS	horsepower
DFI	Digital Fuel Injection	psi	pound(s) per square inch
ECU	Electronic Control Unit	qt	quart(s)
F	farad(s)	r	revolution
°F	degree(s) Fahrenheit	rpm	revolution(s) perminute
ft	foot, feet	s	second(s)
g	gram(s)	TDC	top dead center
gal	gallon(s)	V	volt(s)
h	hour(s)	W	watt(s)
HP	horsepower(s)	Ω	ohm(s)

COUNTRY AND AREA CODES

AU	Australia	EUR	Europe
BR	Brazil	US	United States
CA	Canada		

Foreword

This manual is designed primarily for use by trained mechanics in a properly equipped shop. However, it contains enough detail and basic information to make it useful to the owner who desires to perform his own basic maintenance and repair work. A basic knowledge of mechanics, the proper use of tools, and workshop procedures must be understood in order to carry out maintenance and repair satisfactorily. Whenever the owner has insufficient experience or doubts his ability to do the work, all adjustments, maintenance, and repair should be carried out only by qualified mechanics.

In order to perform the work efficiently and to avoid costly mistakes, read the text, thoroughly familiarize yourself with the procedures before starting work, and then do the work carefully in a clean area. Whenever special tools or equipment are specified, do not use makeshift tools or equipment. Precision measurements can only be made if the proper instruments are used, and the use of substitute tools may adversely affect safe operation.

To get the longest life out of your vehicle:

- Follow the Periodic Maintenance Chart in the Service Manual.
- Be alert for problems and non-scheduled maintenance.
- Use proper tools and genuine Kawasaki Motorcycle parts. Special tools, gauges, and testers that are necessary when servicing Kawasaki motorcycles are introduced by the Service Manual. Genuine parts provided as spare parts are listed in the Parts Catalog.
- Follow the procedures in this manual carefully. Don't take shortcuts.
- Remember to keep complete records of maintenance and repair with dates and any new parts installed.

How to Use This Manual

In this manual, the product is divided into its major systems and these systems make up the manual's chapters. The Quick Reference Guide shows you all of the product's system and assists in locating their chapters. Each chapter in turn has its own comprehensive Table of Contents.

For example, if you want stick coil information, use the Quick Reference Guide to locate the Electrical System chapter. Then, use the Table of Contents on the first page of the chapter to find the Stick Coil section.

Whenever you see symbols, heed their instructions! Always follow safe operating and maintenance practices.

⚠ DANGER

DANGER indicates a hazardous situation which, if not avoided, will result in death or serious injury.

⚠ WARNING

WARNING indicates a hazardous situation which, if not avoided, could result in death or serious injury.

NOTICE

NOTICE is used to address practices not related to personal injury.

This manual contains four more symbols which will help you distinguish different types of information.

NOTE

○*NOTE indicates information that may help or guide you in the operation or service of the vehicle.*

- Indicates a procedural step or work to be done.

○Indicates a procedural sub-step or how to do the work of the procedural step it follows. It also precedes the text of a NOTE.

★Indicates a conditional step or what action to take based on the results of the test or inspection in the procedural step or sub-step it follows.

In most chapters an exploded view illustration of the system components follows the Table of Contents. In these illustrations you will find the instructions indicating which parts require specified tightening torque, oil, grease or a locking agent during assembly.

General Information

Table of Contents

Before Servicing 1-2
Model Identification..... 1-7
General Specifications..... 1-8
Unit Conversion Table 1-10

Before Servicing

Before starting to perform an inspection service or carry out a disassembly and reassembly operation on a motorcycle, read the precautions given below. To facilitate actual operations, notes, illustrations, photographs, cautions, and detailed descriptions have been included in each chapter wherever necessary. This section explains the items that require particular attention during the removal and reinstallation or disassembly and reassembly of general parts.

Especially note the following:

Edges of Parts

Lift large or heavy parts wearing gloves to prevent injury from possible sharp edges on the parts.

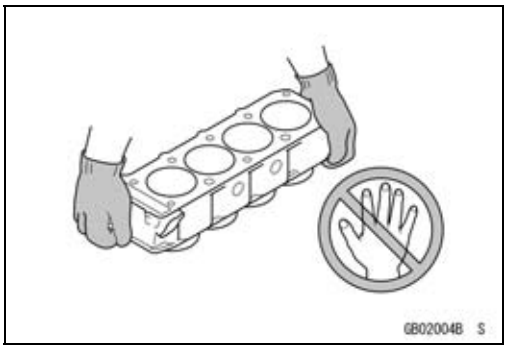

Solvent

Use a high flash-point solvent when cleaning parts. High flash-point solvent should be used according to directions of the solvent manufacturer.

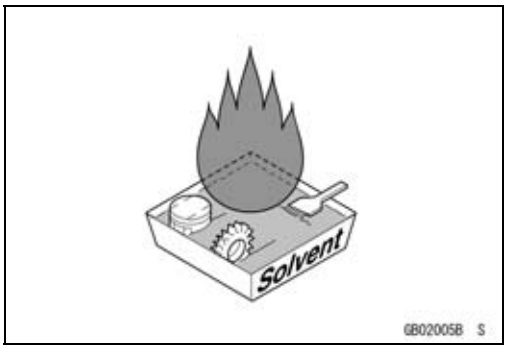

Cleaning Vehicle before Disassembly

Clean the vehicle thoroughly before disassembly. Dirt or other foreign materials entering into sealed areas during vehicle disassembly can cause excessive wear and decrease performance of the vehicle.

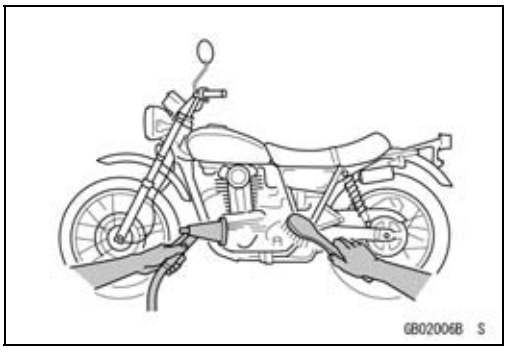

Arrangement and Cleaning of Removed Parts

Disassembled parts are easy to confuse. Arrange the parts according to the order the parts were disassembled and clean the parts in order prior to assembly.

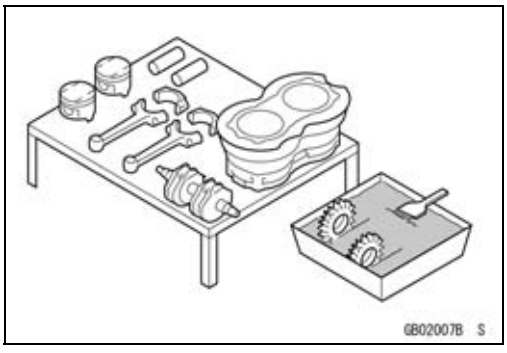

Before Servicing

Storage of Removed Parts

After all the parts including subassembly parts have been cleaned, store the parts in a clean area. Put a clean cloth or plastic sheet over the parts to protect from any foreign materials that may collect before re-assembly.

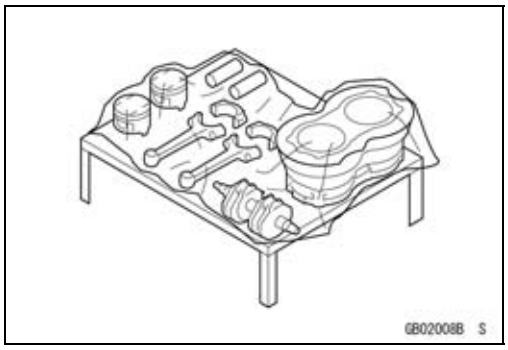

Inspection

Reuse of worn or damaged parts may lead to serious accident. Visually inspect removed parts for corrosion, discoloration, or other damage. Refer to the appropriate sections of this manual for service limits on individual parts. Replace the parts if any damage has been found or if the part is beyond its service limit.

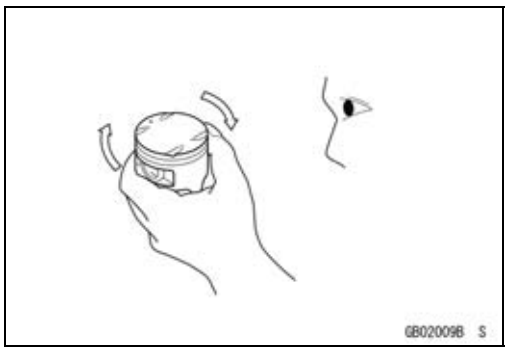

Replacement Parts

Replacement parts must be KAWASAKI genuine or recommended by KAWASAKI. Gaskets, O-rings, oil seals, grease seals, circlips, cotter pins or self-locking nuts must be replaced with new ones whenever disassembled.

If there is a different replacement instruction in any other part of this manual for the specific part, follow it.

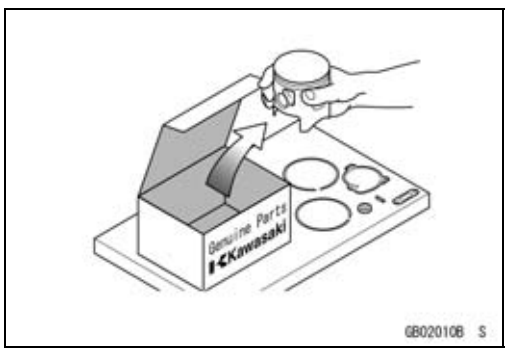

Assembly Order

In most cases assembly order is the reverse of disassembly, however, if assembly order is provided in this Service Manual, follow the procedures given.

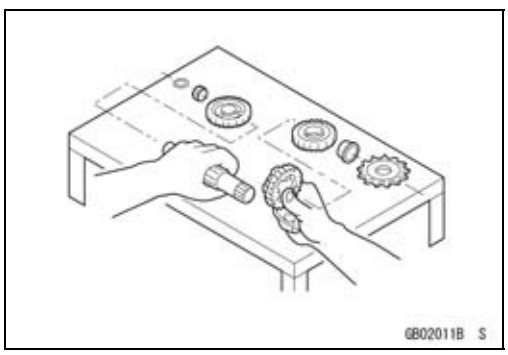

Tightening Sequence

Generally, when installing a part with several bolts, nuts, or screws, start them all in their holes and tighten them to a snug fit. Then tighten them according to the specified sequence to prevent case warpage or deformation which can lead to malfunction. Conversely when loosening the bolts, nuts, or screws, first loosen all of them by about a quarter turn and then remove them. If the specified tightening sequence is not indicated, tighten the fasteners alternating diagonally.

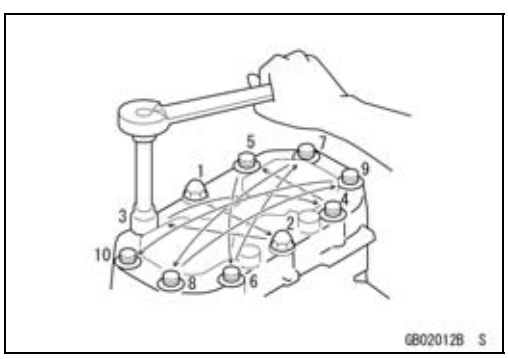

Before Servicing

Tightening Torque

Incorrect torque applied to a bolt, nut, or screw may lead to serious damage. Tighten fasteners to the specified torque using a good quality torque wrench.

All of the tightening torque values are for use with dry, solvent - cleaned threads unless otherwise indicated. If a fastener which should have dry, clean threads gets contaminated with lubricant, etc., applying even the specified torque could damage it.

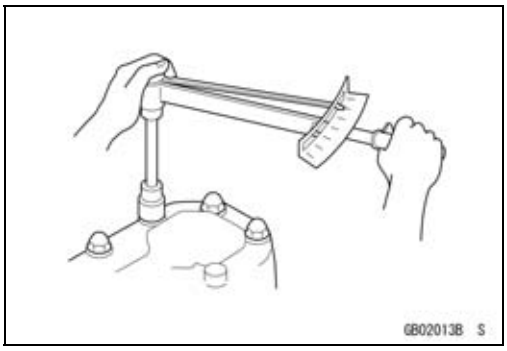

Force

Use common sense during disassembly and assembly, excessive force can cause expensive or hard to repair damage. When necessary, remove screws that have a non -permanent locking agent applied using an impact driver. Use a plastic-faced mallet whenever tapping is necessary.

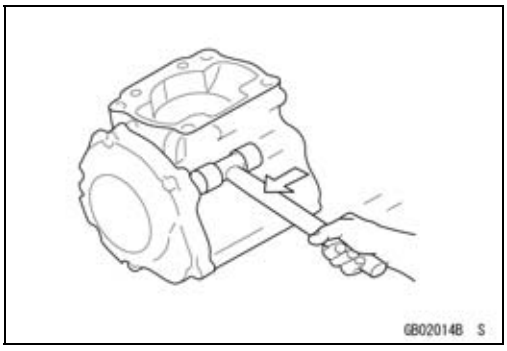

Gasket, O-ring

Hardening, shrinkage, or damage of both gaskets and O-rings after disassembly can reduce sealing performance. Remove old gaskets and clean the sealing surfaces thoroughly so that no gasket material or other material remains. Install new gaskets and replace used O-rings when re-assembling.

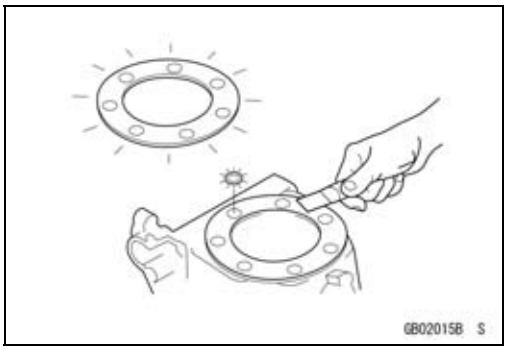

Liquid Gasket, Non-permanent Locking Agent

For applications that require Liquid Gasket or a Non-permanent Locking Agent, clean the surfaces so that no oil residue remains before applying liquid gasket or non-permanent locking agent. Do not apply them excessively. Excessive application can clog oil passages and cause serious damage.

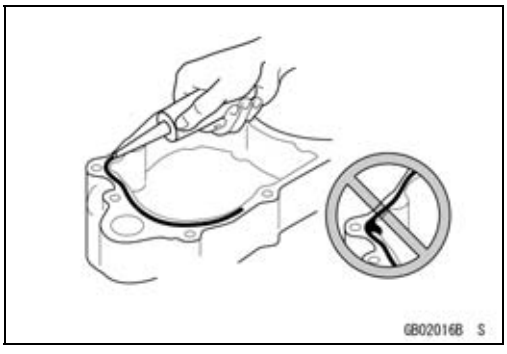

Press

For items such as bearings or oil seals that must be pressed into place, apply small amount of oil to the contact area. Be sure to maintain proper alignment and use smooth movements when installing.

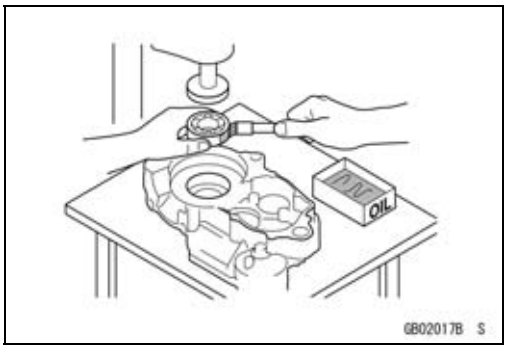

Before Servicing

Ball Bearing and Needle Bearing

Do not remove pressed ball or needle unless removal is absolutely necessary. Replace with new ones whenever removed. Press bearings with the manufacturer and size marks facing out. Press the bearing into place by putting pressure on the correct bearing race as shown.

Pressing the incorrect race can cause pressure between the inner and outer race and result in bearing damage.

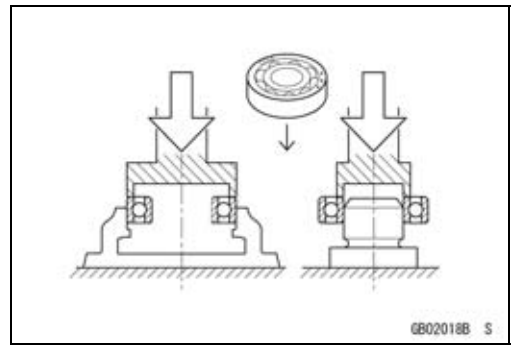

Oil Seal, Grease Seal

Do not remove pressed oil or grease seals unless removal is necessary. Replace with new ones whenever removed. Press new oil seals with manufacture and size marks facing out. Make sure the seal is aligned properly when installing.

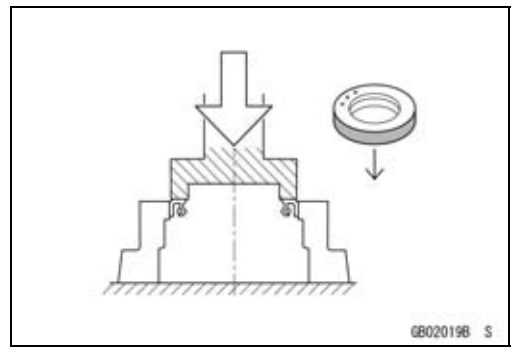

Apply specified grease to the lip of seal before installing the seal.

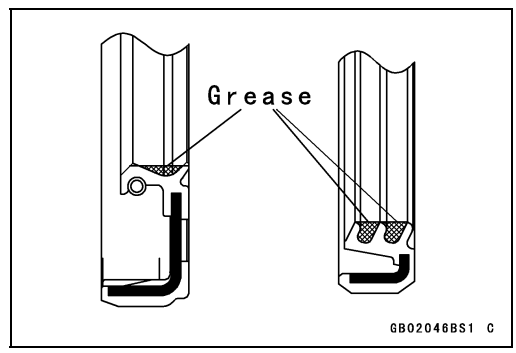

Circlips, Cotter Pins

Replace circlips or cotter pins that were removed with new ones. Take care not to open the clip excessively when installing to prevent deformation.

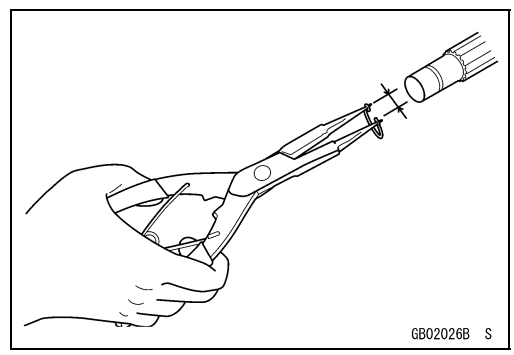

Lubrication

It is important to lubricate rotating or sliding parts during assembly to minimize wear during initial operation. Lubrication points are called out throughout this manual, apply the specific oil or grease as specified.

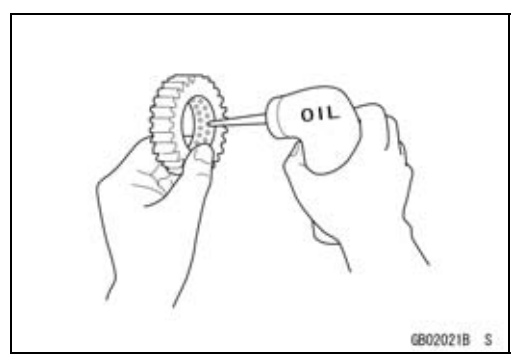

Before Servicing

Direction of Engine Rotation

When rotating the crankshaft by hand, the free play amount of rotating direction will affect the adjustment. Rotate the crankshaft to positive direction (clockwise viewed from output side).

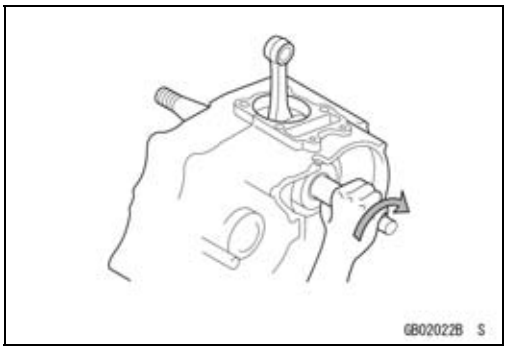

Electrical Leads

A two-color lead is identified first by the primary color and then the stripe color. Unless instructed otherwise, electrical leads must be connected to those of the same color.

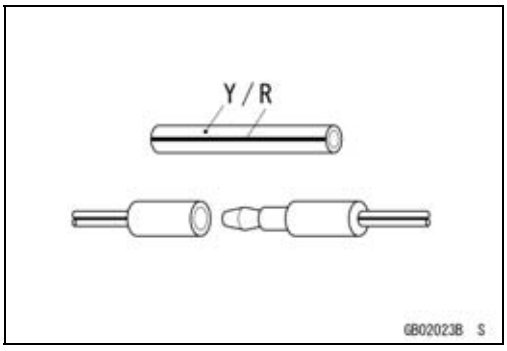

Instrument

Use a meter that has enough accuracy for an accurate measurement. Read the manufacture's instructions thoroughly before using the meter. Incorrect values may lead to improper adjustments.

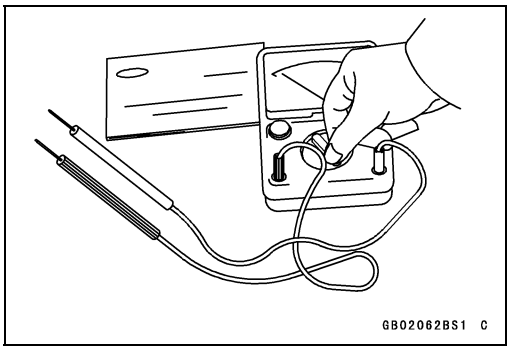

Model Identification

KX450HG Left Side View

KX450HG Right Side View

Frame Number

Engine Number

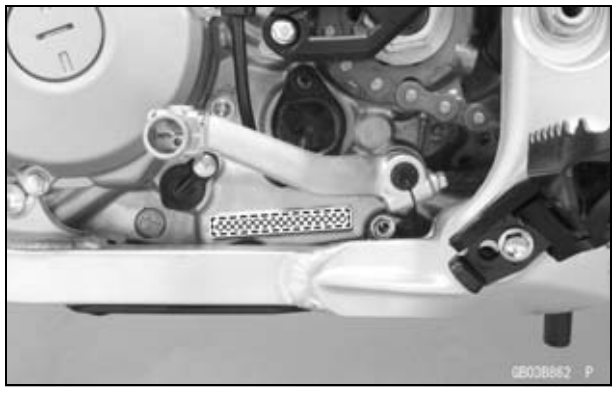

General Specifications

Items	KX450HG
Dimensions	
Overall Length	2 195 mm (86.42 in.)
Overall Width	820 mm (32.3 in.)
Overall Height	1 290 mm (50.79 in.)
Wheelbase	1 495 mm (58.86 in.)
Road Clearance	345 mm (13.6 in.)
Seat Height	960 mm (37.8 in.)
Curb Mass:	108.7 kg (239.7 lb)
Front	52 kg (115 lb)
Rear	56.7 kg (125 lb)
Fuel Tank Capacity	6.3 L (1.7 US gal)
Engine	
Type	4-stroke, single cylinder, DOHC 4valve
Cooling System	Liquid-cooled
Bore and Stroke	96.0 × 62.1 mm (3.78 × 2.44 in.)
Displacement	449 cm³ (27.4 cu in.)
Compression Ratio	12.8:1
Fuel System	FI (Fuel Injection), KEIHIN ϕ43
Fuel Type:	
Minimum Octane Rating:	
Research Octane Number (RON)	95
Antiknock Index (RON + MON)/2	90
Starting System	Primary kick
Ignition System	Digital DC-CDI
Timing Advance	Electronically advanced
Ignition Timing	BTDC 10° @2 000 r/min (rpm)
Spark Plug:	
Standard:	NGK CPR8EB-9
Terminal	Solid post
Option:	NGK CPR9EB-9
Terminal	Solid post
Valve Timing:	
Intake:	
Open	BTDC 38°
Close	ABDC 66°
Duration	284°
Exhaust:	
Open	BBDC 66°
Close	ATDC 38°
Duration	284°
Lubrication System	Forced lubrication (semi-dry sump)
Engine Oil:	
Type	API SG, SH, SJ, SL or SM with JASO MA, MA1 or MA2
Viscosity	SAE 10W-40

General Specifications

Items	KX450HG
Capacity	1.0 L (1.1 US qt)
Drive Train	
Primary Reduction System:	
Type	Gear
Reduction Ratio	2.727 (60/22)
Clutch Type	Wet multi disc, Manual
Transmission:	
Type	5-speed, constant mesh, return shift
Gear Ratios:	
1st	1.750 (28/16)
2nd	1.412 (24/17)
3rd	1.188 (19/16)
4th	1.000 (19/19)
5th	0.875 (21/24)
Final Drive System:	
Type	Chain drive
Reduction Ratio	3.846 (50/13)
Overall Drive Ratio	9.178 @Top gear
Frame	
Type	Tubular, semi-double cradle
Steering Angle	42° to either side
Caster (Rake Angle)	28.0°
Trail	125 mm (4.92 in.)
Front Wheel:	
Tire Size	80/100-21 51M
Tire Make/Type	BRIDGESTONE M403, Tube type
Rim Size	21 × 1.60
Rear Wheel:	
Tire Size	120/80-19 63M
Tire Make/Type	BRIDGESTONE M404, Tube type
Rim Size	19 × 2.15
Front Suspension:	
Type	Telescopic fork (upside-down)
Wheel Travel	310 mm (12.2 in.)
Rear Suspension:	
Type	Swingarm (New Uni-trak)
Wheel Travel	315 mm (12.4 in.)
Brake Type:	
Front and Rear	Single disc
Effective Disc Diameter:	
Front	241 mm (9.49 in.)
Rear	215 mm (8.46 in.)

Specifications are subject to change without notice, and may not apply to every country.

Unit Conversion Table

Prefixes for Units:

Prefix	Symbol	Power
mega	M	× 1 000 000
kilo	k	× 1 000
centi	c	× 0.01
milli	m	× 0.001
micro	μ	× 0.000001

Units of Mass:

kg	×	2.205	=	lb
g	×	0.03527	=	oz

Units of Volume:

L	×	0.2642	=	gal (US)
L	×	0.2200	=	gal (IMP)
L	×	1.057	=	qt (US)
L	×	0.8799	=	qt (IMP)
L	×	2.113	=	pint (US)
L	×	1.816	=	pint (IMP)
mL	×	0.03381	=	oz (US)
mL	×	0.02816	=	oz (IMP)
mL	×	0.06102	=	cu in.

Units of Force:

N	×	0.1020	=	kg
N	×	0.2248	=	lb
kg	×	9.807	=	N
kg	×	2.205	=	lb

Units of Length:

km	×	0.6214	=	mile
m	×	3.281	=	ft
mm	×	0.03937	=	in.

Units of Torque:

N·m	×	0.1020	=	kgf·m
N·m	×	0.7376	=	ft·lb
N·m	×	8.851	=	in·lb
kgf·m	×	9.807	=	N·m
kgf·m	×	7.233	=	ft·lb
kgf·m	×	86.80	=	in·lb

Units of Pressure:

kPa	×	0.01020	=	kgf/cm²
kPa	×	0.1450	=	psi
kPa	×	0.7501	=	cmHg
kgf/cm²	×	98.07	=	kPa
kgf/cm²	×	14.22	=	psi
cmHg	×	1.333	=	kPa

Units of Speed:

km/h	×	0.6214	=	mph

Units of Power:

kW	×	1.360	=	PS
kW	×	1.341	=	HP
PS	×	0.7355	=	kW
PS	×	0.9863	=	HP

Units of Temperature:

$$\frac{9(°C+40)}{5} - 40 = °F \qquad \frac{5(°F+40)}{9} - 40 = °C$$

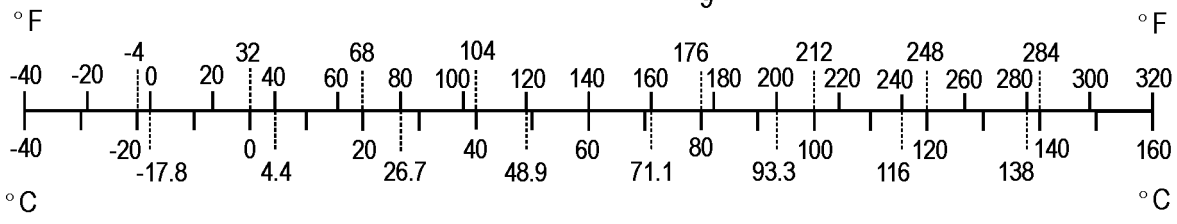

Periodic Maintenance

Table of Contents

Periodic Maintenance Chart 2-3
Torque and Locking Agent 2-5
Specifications 2-11
Special Tools and Sealant 2-14
Periodic Maintenance Procedures 2-15
  Fuel System (DFI) 2-15
    Fuel Hose and Connections Inspection 2-15
    Throttle Grip (Throttle Cable) Free Play Inspection 2-15
    Throttle Grip (Throttle Cable) Free Play Adjustment 2-15
    Throttle Body Cleaning 2-16
    Fuel Hose Replacement 2-16
    Idle Speed Inspection 2-17
    Idle Speed Adjustment 2-18
    Air Cleaner Element Cleaning and Inspection 2-18
    Fuel Tank Cleaning 2-20
  Cooling System 2-20
    Coolant Level Inspection 2-21
    Coolant Deterioration Inspection 2-21
    Water Hoses and Connections Inspection 2-22
  Engine Top End 2-22
    Valve Clearance Inspection 2-22
    Valve Clearance Adjustment 2-23
    Cylinder Head Warp Inspection 2-25
    Cylinder Wear Inspection 2-25
    Piston/Cylinder Clearance Inspection 2-26
    Piston, Piston Ring and Piston Pin Replacement 2-26
    Exhaust System Inspection 2-26
    Silencer Wool Replacement 2-26
  Clutch 2-27
    Clutch Operation Inspection 2-27
    Clutch Plates Inspection 2-28
  Engine Lubrication System 2-29
    Engine Oil Change 2-29
    Oil Filter Change 2-30
    Breather Hose Inspection 2-31
  Crankshaft/Transmission 2-31
    Crankshaft Inspection 2-31
  Wheels/Tires 2-32
    Air Pressure Inspection/Adjustment 2-32
    Tires Inspection 2-33
    Spoke Tightness Inspection 2-33
    Rim Runout Inspection 2-33
    Wheel Bearing Inspection 2-34
  Final Drive 2-34
    Drive Chain Wear Inspection 2-34
    Drive Chain Slack Inspection 2-35
    Rear Axle Nut Inspection 2-36
    Drive Chain Slack Adjustment 2-36
    Drive Chain Lubrication 2-36
    Sprocket Wear Inspection 2-37

Rear Sprocket Warp (Runout) Inspection 2-37
Brakes 2-37
Brake Lever and Pedal Adjustment 2-37
Brake Fluid Level Inspection 2-39
Brake Fluid Change 2-40
Brake Pad Wear Inspection 2-43
Brake Master Cylinder Cup and Dust Cover Replacement 2-43
Brake Caliper Fluid Seal and Dust Seal Replacement 2-44
Brake Hoses and Connections Inspection 2-48
Brake Hose Replacement 2-48
Suspension 2-49
Front Fork Inspection 2-49
Front Fork Oil Change 2-50
Rear Shock Absorber Inspection 2-68
Rear Shock Absorber Oil Change 2-68
Swingarm and Uni-Trak Linkage Inspection 2-73
Swingarm and Uni-Trak Linkage Pivot Lubrication 2-73
Steering 2-73
Steering Inspection 2-73
Steering Adjustment 2-74
Steering Stem Bearing Lubrication 2-75
Frame 2-75
Frame Inspection 2-75
Electrical System 2-76
Spark Plug Cleaning and Inspection 2-76
Spark Plug Replacement 2-77
General Lubrication and Cable Inspection 2-77
Lubrication 2-77
Cable Inspection 2-78
Nut, Bolt, and Fastener Tightness Inspection 2-78
Tightness Inspection 2-78

Periodic Maintenance Chart

The maintenance must be done in accordance with this chart to keep the motorcycle in good running condition.

	FREQUENCY / OPERATION	Each race or 2.5 hr	Every 3 races or 7.5 hr	Every 6 races or 15 hr	Every 12 races or 30 hr	See Page
ENGINE	Spark plug - clean and inspect †	●				2-76
	Spark plug - replace		●			2-77
	Clutch - inspect	●				2-27
	Clutch plates - inspect †	●				2-28
	Throttle cable - inspect and adjust	●				2-15
	Air cleaner element - clean	●				2-18
	Air cleaner element - replace	If damaged				2-18
	Throttle body assy - inspect and adjust	●				2-16
	Engine oil - change			●		2-29
	Piston and piston ring - replace			●		2-26
	Cylinder head, cylinder - inspect			●		2-25
	Piston pin - replace				●	2-26
	Valve clearance - inspect †			●		2-23
	Oil filter - replace			●		2-30
	Exhaust system - inspect †	●				2-26
	Silencer wool - replace		●			2-26
	Kick pedal and shift pedal - clean	●				–
	Engine sprocket - inspect †	●				2-37
	Coolant level - inspect	●				2-21
	Water hoses and connections - inspect †	●				2-22
	Crankshaft - inspect			●		2-31
	Breather hose - inspect	●				2-31
CHASSIS	Brake - adjust †	●				2-37
	Brake pad wear - inspect †	●				2-43
	Brake fluid level - inspect †	●				2-39
	Brake fluid - change	Every 2 years				2-40
	Brake master cylinder cup and dust cover - replace	Every 2 years				2-43
	Brake caliper fluid seal and dust seal - replace	Every 2 years				2-44
	Brake hoses - replace	Every 4 years				2-48
	Brake hoses, connections - inspect †	●				2-48
	Spoke tightness and rim runout - inspect †	●				2-33
	Wheel bearing - inspect †	●				2-34
	Frame - inspect	●				2-75
	Rear axle nut- inspect †	●				2-36
	Drive chain wear - inspect †	●				2-34
	Drive chain - inspect and adjust	●				2-35, 2-36

Periodic Maintenance Chart

	FREQUENCY / OPERATION	Each race or 2.5 hr	Every 3 races or 7.5 hr	Every 6 races or 15 hr	Every 12 races or 30 hr	See Page
CHASSIS	Drive chain - lubricate	●				2-36
	Wheels/tires - inspect	●				2-33
	Rear sprocket - inspect †	●				2-37
	Front fork - clean and inspect	●				2-49
	Front fork oil - change			●		2-50
	Rear shock absorber oil - change			●		2-68
	Cable - inspect	●				2-78
	Fuel hose - replace	Every 5 years				2-16
	Fuel hose, connections - inspect †	●				2-15
	Fuel system - clean		●			2-20
	Steering play - inspect †	●				2-73
	Steering stem bearing - lubricate			●		2-75
	Rear shock absorber - inspect	●				2-68
	Swingarm and Uni-Trak linkage pivots - lubricate		●			2-73
	Swingarm and Uni-Trak linkage pivots - inspect †		●			2-73
	Nuts, bolts, fasteners - inspect †	●				2-78
	General lubrication - perform	●				2-77

†: Replace, add, adjust, clean or torque if necessary.

Torque and Locking Agent

Tighten all bolts and nuts to the proper torque using an accurate torque wrench. If insufficiently tightened, a bolt or nut may become damaged, strip an internal thread, or break and then fall out. The following table lists the tightening torque for the major bolts and nuts, and the parts requiring use of a non-permanent locking agent or silicone grease etc. All of the values are for use with dry solvent - cleaned threads unless otherwise indicated.

When checking the tightening torque of the bolts and nuts, first loosen the bolt or nut by half a turn and then tighten to specified torque.

Letters used in the “Remarks” column mean:

AL: Tighten the two clamp bolts alternately two times to ensure even tightening torque.
G: Apply grease.
L: Apply a non-permanent locking agent.
Lh: Left-hand Threads
MO: Apply molybdenum disulfide oil solution.
(mixture of the engine oil and molybdenum disulfide grease in a weight ratio 10:1)
R: Replacement Parts
S: Follow the specified tightening sequence.
Si: Apply silicone grease (ex. PBC grease).
T: First, tighten the stem locknut with 55 N·m (5.6 kgf·m, 41 ft·lb) of torque, then loosen it and retighten it with 5.0 N·m (0.51 kgf·m, 49 in·lb) of torque.

Fastener	Torque			Remarks
	N·m	kgf·m	ft·lb	
Fuel System (DFI)				
Intake Air Pressure Sensor Bracket Screw	3.4	0.35	30 in·lb	
Delivery Pipe Joint Screw	3.4	0.35	30 in·lb	
Delivery Pipe Screws	3.4	0.35	30 in·lb	
Accelerator Cable Bolt	3.0	0.31	27 in·lb	
Decelerator Cable Bolt Locknut	3.0	0.31	27 in·lb	
Idle Adjusting Screw Assy	2.1	0.21	19 in·lb	
Throttle Sensor Mounting Screw	3.4	0.35	30 in·lb	
Throttle Pulley Cover Bolt	4.0	0.41	35 in·lb	
Throttle Cable Housing Screws	3.8	0.39	34 in·lb	
Air Cleaner Duct Clamp Bolt	2.0	0.20	18 in·lb	
Intake Air Temperature Sensor Bolt	3.3	0.34	29 in·lb	L
Air Cleaner Duct Screws	1.2	0.12	11 in·lb	
Air Cleaner Element Wing Bolt (for reference)	1.2	0.12	11 in·lb	
Air Cleaner Housing Screws	1.2	0.12	11 in·lb	
Fuel Tank Bolt	8.0	0.82	71 in·lb	
Diagnostic Connector Bracket Bolt	5.0	0.51	44 in·lb	
ECU Bracket Bolts	8.0	0.82	71 in·lb	
Vehicle-down Sensor Bracket Bolt	7.0	0.71	62 in·lb	
Ignition Coil Bolts	8.0	0.82	71 in·lb	
Fuel Pump Bolts	10	1.0	89 in·lb	L, S
Water Temperature Sensor	12	1.2	106 in·lb	
Capacitor Bracket Bolts	8.0	0.82	71 in·lb	
Gear Position Switch Screws	3.0	0.31	27 in·lb	
Cooling System				
Radiator Mounting Bolts	10	1.0	89 in·lb	

Torque and Locking Agent

Fastener	Torque			Remarks
	N·m	kgf·m	ft·lb	
Radiator Screen Bolts	10	1.0	89 in·lb	
Air Bleeder Screw	1.6	0.16	14 in·lb	
Water Hose Fitting Bolts	10	1.0	89 in·lb	
Water Pump Cover Bolt (L = 70 mm)	12	1.2	106 in·lb	
Water Pump Cover Bolts (L = 25 mm)	10	1.0	89 in·lb	
Coolant Drain Bolt	7.0	0.71	62 in·lb	
Water Pump Impeller Bolt	10	1.0	89 in·lb	
Engine Top End				
Cylinder Head Cover Bolts	10	1.0	89 in·lb	
Cylinder Head Bolts (M10)	59	6.0	44	MO, S
Camshaft Cap Bolts	10	1.0	89 in·lb	MO, S
Camshaft Sprocket Bolts	12	1.2	106 in·lb	L
Plug	20	2.0	15	L
Oil Line Plug	3.0	0.31	27 in·lb	L
Cylinder Head Bolts (M6)	12	1.2	106 in·lb	S
Water Hose Fitting Bolts	10	1.0	89 in·lb	
Cylinder Bolt	12	1.2	106 in·lb	S
Throttle Body Assy Holder Screws	10	1.0	89 in·lb	L
Throttle Body Assy Clamp Bolt	2.0	0.20	18 in·lb	
Camshaft Chain Tensioner Mounting Bolts	10	1.0	89 in·lb	
Camshaft Chain Tensioner Cap Bolt	5.0	0.51	44 in·lb	
Rear Camshaft Chain Guide Bolt	15	1.5	11	
Lower Camshaft Chain Guide Bolt	7.0	0.71	62 in·lb	
Exhaust Pipe Holder Nuts	15	1.5	11	S
Exhaust Pipe Cover Bolts	12	1.2	106 in·lb	S
Muffler Clamp Bolt	11	1.1	97 in·lb	S
Muffler Mounting Bolts	21	2.1	15	S
Muffler Cover Bolts	10	1.0	89 in·lb	L
Clutch				
Clutch Lever Clamp Bolts	4.0	0.41	35 in·lb	AL
Clutch Hub Nut	100	10.2	73.8	R
Clutch Spring Bolts	9.0	0.92	80 in·lb	
Oil Filter Cap Bolts	12	1.2	106 in·lb	
Clutch Cover Bolts	12	1.2	106 in·lb	
Oil Filler Plug	3.5	0.36	31 in·lb	
Right Engine Cover Bolts	12	1.2	106 in·lb	
Engine Lubrication System				
Oil Filter Cap Bolts	12	1.2	106 in·lb	
Oil Filler Plug	3.5	0.36	31 in·lb	
Oil Pump Idle Gear Shaft Retainer Screw	6.0	0.61	53 in·lb	L
Oil Pump Bolts	10	1.0	89 in·lb	
Piston Oil Nozzle Bolt	7.0	0.71	62 in·lb	L
Nozzle	3.0	0.31	27 in·lb	

Torque and Locking Agent

Fastener	Torque			Remarks
	N·m	kgf·m	ft·lb	
Oil Screen Bolt	10	1.0	89 in·lb	
Engine Oil Drain Bolt	20	2.0	15	
Engine Removal/Installation				
Middle Engine Bracket Nuts	30	3.1	22	R, S
Middle Engine Mounting Nut	50	5.1	37	R, S
Upper Engine Mounting Bolts	50	5.1	37	S
Upper Engine Bracket Bolts	30	3.1	22	S
Lower Engine Mounting Nut	50	5.1	37	R, S
Swingarm Pivot Shaft Nut	100	10.2	73.8	R, S
Crankshaft/Transmission				
Primary Gear Nut	100	10.2	73.8	Lh, R
Crankcase Bearing Retainer Screws (M6)	15	1.5	11	L
Breather Plate Bolts	7	0.71	62 in·lb	
Piston Oil Nozzle Bolt	7	0.71	62 in·lb	L
Crankcase Bearing Retainer Screws (M8)	25	2.5	18	L
Nozzle	3	0.31	27 in·lb	
Balancer Weight Mounting Nut	52	5.3	38	
Crankcase Bolts (M6, L= 50 mm)	12	1.2	106 in·lb	S
Crankcase Bolts (M7)	15	1.5	11	S
Crankcase Bolts (M6, L= 85 mm)	12	1.2	106 in·lb	S
Engine Oil Drain Bolt	20	2.0	15	
Kick Pedal Bolt	35	3.6	26	L
Ratchet Guide Bolt	9.0	0.92	80 in·lb	
Ratchet Plate Bolt	10	1.0	89 in·lb	S
Ratchet Plate Screw	15	1.5	11	L, S
Gear Positioning Lever Nut	9.0	0.92	80 in·lb	
Shift Drum Cam Bolt	24	2.4	18	L
Shift Pedal Bolt	10	1.0	89 in·lb	
Wheels/Tires				
Spoke Nipples	3.9	0.40	35 in·lb	
Front Axle Clamp Bolts	23	2.3	17	AL, S
Front Axle Nut	80	8.2	59	S
Rear Axle Nut	110	11.2	81.1	
Bead Protector Nut	6.0	0.61	53 in·lb	
Final Drive				
Upper Chain Guide Roller Bolt	20	2.0	15	
Lower Chain Guide Roller Nut	8.0	0.82	71 in·lb	R
Chain Slipper Screws	2.5	0.25	22 in·lb	L
Engine Sprocket Cover Bolts	5.0	0.51	44 in·lb	
Engine Sprocket Nut	70	7.1	52	
Chain Guide Plate Bolt	8.0	0.82	71 in·lb	
Chain Guide Plate Nuts	8.0	0.82	71 in·lb	
Chain Adjuster Locknut	15	1.5	11	

Torque and Locking Agent

Fastener	Torque			Remarks
	N·m	kgf·m	ft·lb	
Rear Sprocket Nuts	35	3.6	26	R, S
Brakes				
Brake Lever Pivot Bolt	5.9	0.60	52 in·lb	Si
Brake Lever Pivot Bolt Locknut	5.9	0.60	52 in·lb	
Front Master Cylinder Clamp Bolts	9.0	0.92	80 in·lb	S
Front Brake Reservoir Cap Screws	1.5	0.15	13 in·lb	
Brake Hose Banjo Bolts	25	2.5	18	
Front Brake Hose Clamp Bolt	7.0	0.71	62 in·lb	
Caliper Bleed Valve	8.0	0.82	71 in·lb	
Front Caliper Mounting Bolts	25	2.5	18	
Brake Pad Pin	17	1.7	13	
Front Brake Disc Mounting Bolts	10	1.0	89 in·lb	L, S
Rear Master Cylinder Mounting Bolts	10	1.0	89 in·lb	
Rear Brake Reservoir Cap Bolts	1.5	0.15	13 in·lb	
Rear Master Cylinder Push Rod Locknut	17	1.7	13	
Rear Brake Hose Clamp Screws	2.5	0.25	22 in·lb	
Rear Brake Disc Mounting Bolts	23	2.3	17	L, S
Brake Pad Pin Plug	2.5	0.25	22 in·lb	
Rear Caliper Holder Shaft	27	2.8	20	Si
Caliper Guard Bolts	6.0	0.61	53 in·lb	
Rear Brake Disc Guard Bolts	6.0	0.61	53 in·lb	
Brake Pedal Bolt	25	2.5	18	L, G
Suspension				
Front Fork Clamp Bolts (Upper)	23	2.3	17	AL
Front Brake Hose Clamp Bolt (Stem Base)	3.0	0.31	27 in·lb	
Air Pressure Relief Screw	1.3	0.13	12 in·lb	
Base Valve Assembly	30	3.1	22	
Cylinder Units	76	7.7	56	
Front Fork Clamp Bolts (Lower)	23	2.3	17	AL
Plug Bolt	45	4.6	33	
Adjuster Assembly (to Piston Rod)	28	2.9	21	
Adjuster Assembly (to Axle Holder)	69	7.0	51	L
Sealing Bolt (to Piston Rod)	28	2.9	21	
Sealing Bolt (to Axle Holder)	69	7.0	51	L
Fork Protector Bolts	4.0	0.41	35 in·lb	
Rear Shock Absorber Nut (Upper)	40	4.1	30	R
Rear Shock Absorber Nut (Lower)	35	3.6	26	R
Tie-rod Mounting Nuts	60	6.1	44	R
Rocker Arm Pivot Nut	60	6.1	44	R
Swingarm Pivot Shaft Nut	100	10.2	73.8	R
Gas Reservoir Damping Adjuster Assembly	29.5	3.01	21.8	
Piston Rod Locknut	37	3.8	27	R

Torque and Locking Agent

Fastener	Torque			Remarks
	N·m	kgf·m	ft·lb	
Steering				
Handlebar Clamp Bolts	25	2.5	18	AL
Steering Stem Head Nut	100	10.2	73.8	
Front Fork Clamp Bolts (Upper)	23	2.3	17	AL
Steering Stem Nut	5.0	0.51	44 in·lb	T
Handlebar Holder Nuts	35	3.6	26	R
Front Brake Hose Clamp Bolt (Stem Base)	3.0	0.31	27 in·lb	
Front Fork Clamp Bolts (Lower)	23	2.3	17	AL
Frame				
Number Plate Bolt	8.0	0.82	71 in·lb	
Radiator Shroud Bolts	7.0	0.71	62 in·lb	
Right Engine Guard Bolt	8.0	0.82	71 in·lb	
Seat Bolts	25	2.5	18	
Side Cover Bolts	7.0	0.71	62 in·lb	
Footpeg Bracket Bolts (Upper)	35	3.6	26	L
Footpeg Bracket Bolts (Lower)	17	1.7	13	L
Rear Frame Mounting Bolts	35	3.6	26	
Rear Fender Bolts (Rear)	8.0	0.82	71 in·lb	
Rear Fender Bolts (Front)	7.0	0.71	62 in·lb	
Rear Flap Screws	1.2	0.12	11 in·lb	
Front Fender Bolts	8.0	0.82	71 in·lb	
Lower Engine Guard Bolts	7.0	0.71	62 in·lb	
Electrical System				
Diagnostic Connector Bracket Bolt	5.0	0.51	44 in·lb	
ECU Bracket Bolts	8.0	0.82	71 in·lb	
Engine Stop Switch Clamp Screw	1.2	0.12	11 in·lb	
Launch Control Mode Button Clamp Screw	1.2	0.12	11 in·lb	
Regulator/Rectifier Nuts	8.0	0.82	71 in·lb	R
Connector Bracket Bolt	8.0	0.82	71 in·lb	
Vehicle-down Sensor Bracket Bolt	7.0	0.71	62 in·lb	
Regulator/Rectifier Bracket Bolts	8.0	0.82	71 in·lb	
Ignition Coil Bolts	8.0	0.82	71 in·lb	
Spark Plug	13	1.3	115 in·lb	
Capacitor Bracket Bolts	8.0	0.82	71 in·lb	
Magneto Cover Bolts	10	1.0	89 in·lb	
Timing Inspection Cap	3.5	0.36	31 in·lb	
Flywheel Nut Cap	3.5	0.36	31 in·lb	
Crankshaft Sensor Bolts	7.0	0.71	62 in·lb	
Stator Coil Bolts	10	1.0	89 in·lb	L
Flywheel Nut	80	8.2	59	

Torque and Locking Agent

Basic Torque for General Fasteners

Threads diameter (mm)	Torque		
	N·m	kgf·m	ft·lb
5	3.4 ~ 4.9	0.35 ~ 0.50	30 ~ 43 in·lb
6	5.9 ~ 7.8	0.60 ~ 0.80	52 ~ 69 in·lb
8	14 ~ 19	1.4 ~ 1.9	10.0 ~ 13.5
10	25 ~ 34	2.6 ~ 3.5	19.0 ~ 25
12	44 ~ 61	4.5 ~ 6.2	33 ~ 45
14	73 ~ 98	7.4 ~ 10.0	54 ~ 72
16	115 ~ 155	11.5 ~ 16.0	83 ~ 115
18	165 ~ 225	17.0 ~ 23.0	125 ~ 165
20	225 ~ 325	23 ~ 33	165 ~ 240

Specifications

Item	Standard	Service Limit
Fuel System		
Throttle Grip Free Play	2 ~ 3 mm (0.08 ~ 0.12 in.)	– – –
Idle Speed	2 000 ±50 r/min (rpm)	– – –
Air Cleaner Element Oil	High-quality foam air filter oil	– – –
Cooling System		
Coolant:		
Type (Recommended)	Permanent type antifreeze	– – –
Color	Green	– – –
Mixed Ratio	Soft water 50%, coolant 50%	– – –
Freezing Point	–35°C (–31°F)	– – –
Total Amount	1.1 L (1.2 US qt)	– – –
Engine Top End		
Valve Clearance:		
Exhaust	0.17 ~ 0.22 mm (0.0067 ~ 0.0087 in.)	– – –
Intake	0.10 ~ 0.15 mm (0.0039 ~ 0.0059 in.)	– – –
Cylinder Head Warp	– – –	0.05 mm (0.002 in.)
Cylinder Inside Diameter (see text)	96.025 ~ 96.037 mm (3.7805 ~ 3.7810 in.)	96.12 mm (3.784 in.)
Piston/Cylinder Clearance	0.045 ~ 0.067 mm (0.0018 ~ 0.0026 in.)	– – –
Clutch		
Clutch Lever Free Play	8 ~ 13 mm (0.31 ~ 0.51 in.)	– – –
Friction Plate Thickness	2.92 ~ 3.08 mm (0.115 ~ 0.121 in.)	2.7 mm (0.11 in.)
Friction Plate Warp	0.15 mm (0.0059 in.) or less	0.3 mm (0.012 in.)
Steel Plate Warp	0.20 mm (0.0079 in.) or less	0.3 mm (0.012 in.)
Engine Lubrication System		
Engine Oil:		
Type	Castrol “POWER1 Racing 4T” 5W-40 or API SG, SH, SJ, SL or SM with JASO MA, MA1 or MA2	– – –
Viscosity	SAE 10W-30, 10W-40 or 10W-50	– – –
Capacity	0.8 L (0.8 US qt) (when filter is not removed)	– – –
	0.9 L (1.0 US qt) (when filter is remove)	– – –
	1.0 L (1.1 US qt) (when engine is completely dry)	– – –
Crankshaft/Transmission		
Connecting Rod Big End Side Clearance	0.25 ~ 0.35 mm (0.0098 ~ 0.0138 in.)	0.6 mm (0.02 in.)

Specifications

Item	Standard	Service Limit
Wheels/Tires		
Rim Runout (with tire installed):		
Axial	TIR 1.0 mm (0.04 in.) or less	TIR 2.0 mm (0.08 in.)
Radial	TIR 1.0 mm (0.04 in.) or less	TIR 2.0 mm (0.08 in.)
Tires Air Pressure (Front/Rear)	100 kPa (1.02 kgf/cm², 14.5 psi)	– – –
Standard Tire:		
Front:		
Size	80/100-21 51M	– – –
Make	BRIDGESTONE	– – –
Type	M403, Tube	– – –
Rear:		
Size	120/80-19 63M	– – –
Make	BRIDGESTONE	– – –
Type	M404, Tube	– – –
Final Drive		
Drive Chain Slack	52 ~ 58 mm (2.0 ~ 2.3 in.)	– – –
Drive Chain 20-link Length	317.5 ~ 318.2 mm (12.50 ~ 12.53 in.)	323 mm (12.7 in.)
Rear Sprocket Warp (Runout)	TIR 0.4 mm (0.016 in.) or less	TIR 0.5 mm (0.020 in.)
Brakes		
Brake Fluid Type:		
Front	DOT3 or DOT4	– – –
Rear	DOT3 or DOT4	– – –
Brake Pad Lining Thickness:		
Front	4.0 mm (0.16 in.)	1 mm (0.04 in.)
Rear	6.4 mm (0.25 in.)	1 mm (0.04 in.)
Suspension		
Front Fork		
Air Pressure (Right Front Fork):		
Inner Chamber	(US, CA, AU) 1 200 kPa (12.24 kgf/cm², 174 psi) (EUR, BR) 1 100 kPa (11.21 kgf/cm², 160 psi)	(Adjustable Range) 600 ~ 1 400 kPa (6.11 ~ 14.28 kgf/cm², 87.0 ~ 203 psi)
Outer Chamber	100 kPa (1.02 kgf/cm², 14.5 psi)	(Adjustable Range) 0 ~ 130 kPa (0 ~ 1.33 kgf/cm², 0 ~ 18.9 psi)
Balance Chamber	(US, CA, AU) 1 400 kPa (14.28 kgf/cm², 203 psi) (EUR, BR) 1 200 kPa (12.24 kgf/cm², 174 psi)	(Adjustable Range) 530 ~ 1 500 kPa (5.40 ~ 15.30 kgf/cm², 76.9 ~ 218 psi)

Specifications

Item	Standard	Service Limit
Suspension Oil	Kawasaki SS-19 or equivalent	– – –
Amount:		
Left Front Fork:		
Cylinder Unit	310 mL (10.5 US oz.)	– – –
Outer Tube	345 mL (11.7 US oz.)	(Adjustable Range) 300 ~398 mL (10.1 ~13.5US oz.)
Right Front Fork:		
Cylinder Unit	50 mL (1.69 US oz.)	– – –
Outer Tube	270 mL (9.13 US oz.)	– – –
Balance Chamber	5 mL (0.17 US oz.)	– – –
Rear Shock Absorber		
Suspension Oil	Kawasaki SS-25 or equivalent	– – –
Amount	Approximately 380 mL (12.8 US oz.)	– – –
Electrical System		
Spark Plug Gap	0.8 ~ 0.9 mm (0.03 ~ 0.04 in.)	– – –

Special Tools and Sealant

Inside Circlip Pliers:
57001-143

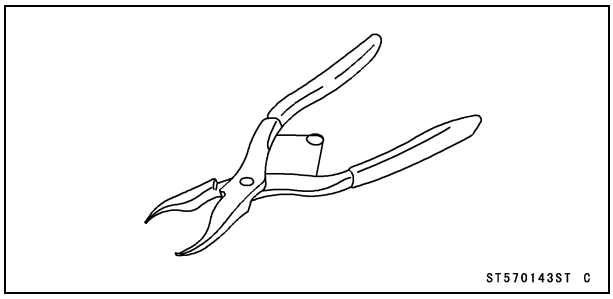

Steering Stem Nut Wrench:
57001-1100

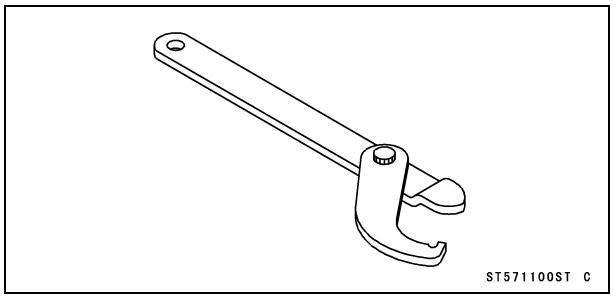

Jack:
57001-1238

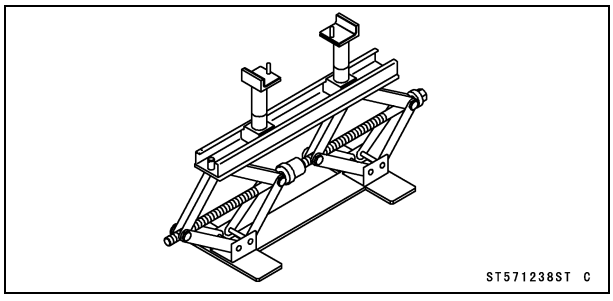

Spark Plug Wrench, Hex 16:
57001-1262

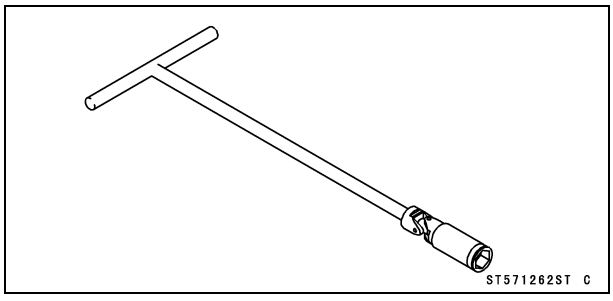

Fork Oil Level Gauge:
57001-1290

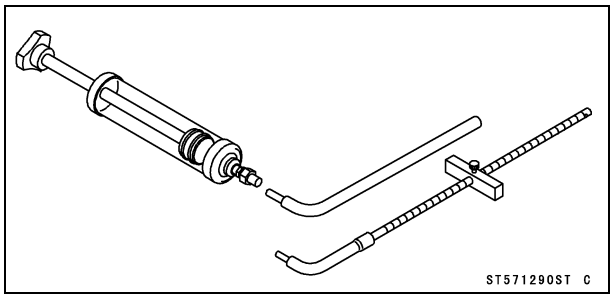

Filler Cap Driver:
57001-1454

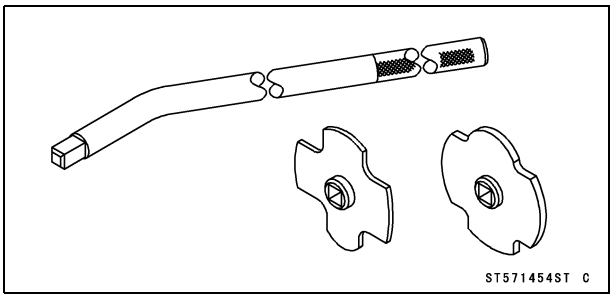

Jack Attachment:
57001-1608

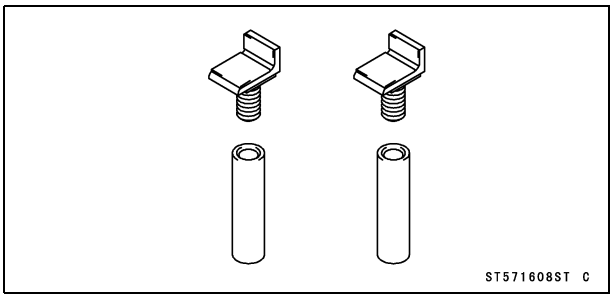

Top Plug Wrench, 50 mm:
57001-1645

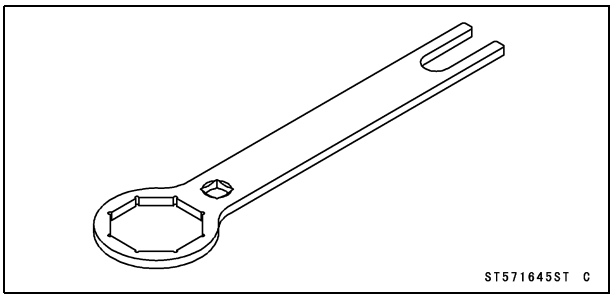

Top Plug Wrench, 36 mm:
57001-1810

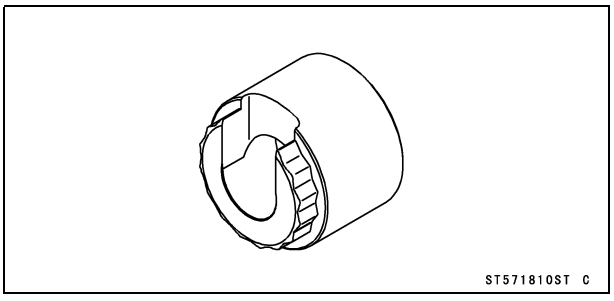

Liquid Gasket, TB1215:
92104-1065

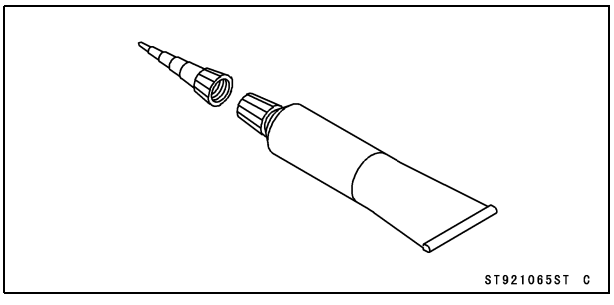

Periodic Maintenance Procedures

Fuel System (DFI)

Fuel Hose and Connections Inspection

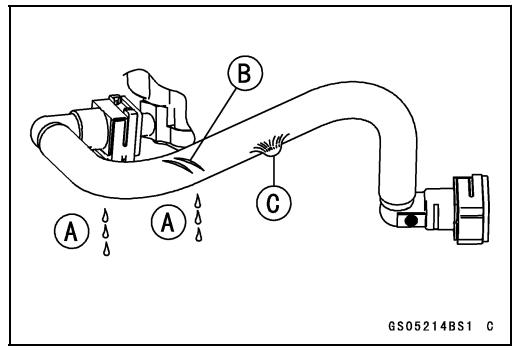

○If the motorcycle is not properly handled, the high pressure inside the fuel line can cause fuel to leak [A] or the hose burst. Remove the fuel tank (see Fuel Tank Removal in the Fuel System (DFI) chapter) and check the fuel hose.

★Replace the fuel hose if any fraying, cracks [B] or bulges [C] are noticed.

- Check that the fuel hose is routed according to Cable, Wire, and Hose Routing section in the Appendix chapter.
- When installing the fuel hose, avoid sharp bending, kinking, flattening or twist, and run the fuel hose with a minimum of bending so that fuel flow will not be obstructed.

★Replace the hose if it has been sharply bent or kinked.

Throttle Grip (Throttle Cable) Free Play Inspection

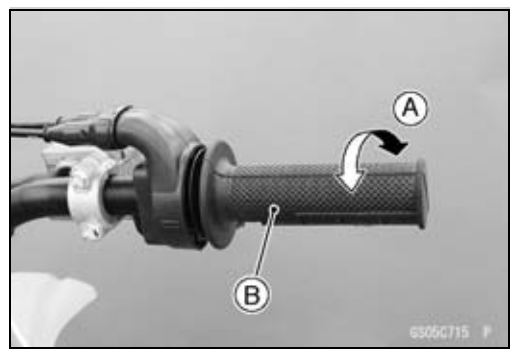

- Check the throttle grip free play [A] by lightly turning the throttle grip [B] back and forth.

Throttle Grip Free Play
Standard: 2 ~ 3 mm (0.08 ~ 0.12 in.)

★If the free play is improper, adjust the throttle cable.

- Check that the throttle grip moves smoothly from full open to close, and the throttle closes quickly and completely in all steering positions by the return spring.

★If the throttle grip does not return properly, check the throttle cable routing, grip free play, and cable damage. Then lubricate the throttle cable.

- Run the engine at the idle speed, and turn the handlebar all the way to the right and left to ensure that the idle speed does not change.

★If the idle speed increase, check the throttle cable free play and the cable routing.

Throttle Grip (Throttle Cable) Free Play Adjustment

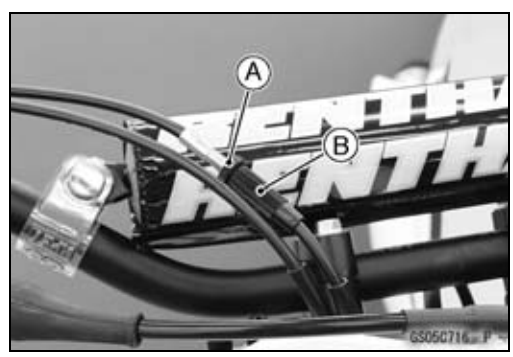

- Loosen the locknut [A] at the upper end of the throttle cable.
- Turn the throttle cable adjuster [B] to obtain the specified play.
- Tighten the locknut.

★If the throttle grip free play cannot be adjusted with the adjuster, replace the throttle cables.

- Turn the handlebar from side to side while idling the engine. If idle speed varies, the throttle cable may be poorly routed or it may be damaged.

⚠ WARNING

Operation with improperly adjusted, incorrectly routed or damaged cables could result in an unsafe riding condition. Follow the service manual to make sure to correct any of these conditions.

Periodic Maintenance Procedures

Throttle Body Cleaning

- Check the throttle bore for cleanliness as follows.

○Remove the throttle body assy (see Throttle Body Assy Removal in the Fuel System (DFI) chapter).

○Check the throttle valve [A] and the throttle bore [B] for carbon deposits by opening the throttle valve.

★If any carbon accumulates, wipe the carbon off the throttle bore and the throttle valve, using a lint-free cloth penetrated with a high flash-point solvent.

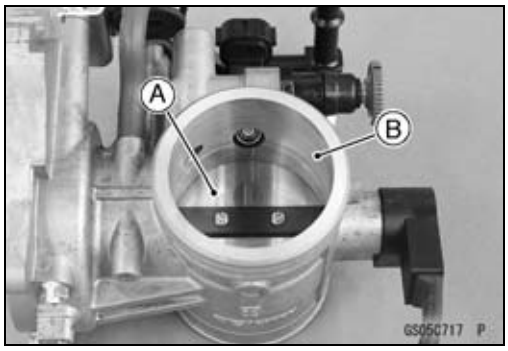

Fuel Hose Replacement

- Remove the fuel tank (see Fuel Tank Removal in the Fuel System (DFI) chapter).
- Be sure to place a piece of cloth around each fuel hose joint.
- Wipe off the dirt of the surface [A] around the connection using a cloth or a soft brush.

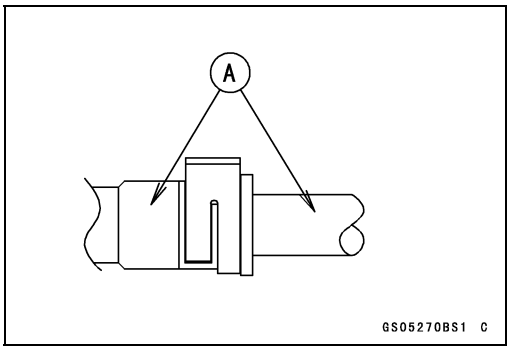

When removing with flat tip screwdriver

- Insert the flat tip screwdriver [A] into slit on the joint lock [B].
- Turn the driver to disconnect the joint lock.

When removing with fingers

- Open and push up [C] the joint lock with your fingers.

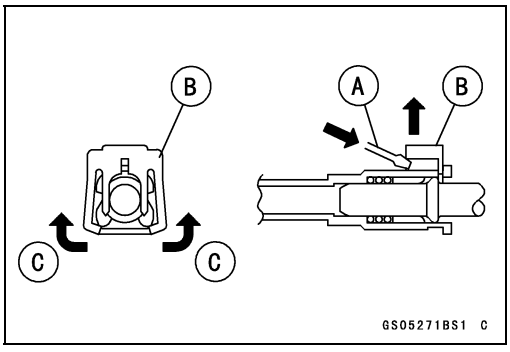

NOTICE

Prying or excessively widening the joint lock ends for fuel hose removal will permanently deform the joint lock, resulting in a loose or incomplete lock that may allow fuel to leak and create the potential for a fire explosion. To prevent fire or explosion from a damaged joint lock, do not pry or excessively widen the joint lock ends when removing the fuel hose. The joint lock has a retaining edge that locks around the housing.

- Pull the fuel hose joint [A] out of the delivery pipe.

⚠ WARNING

Fuel is flammable and explosive under certain conditions and can cause severe burns. Be prepared for fuel spillage; any spilled fuel must be completely wiped up immediately. When the fuel hose is disconnected, fuel spills out from the hose and the pipe. Cover the hose connection with a clean shop towel to prevent fuel spillage.

- Clean the delivery pipe.
- Cover the delivery pipe with the vinyl bag to keep it clean.

Periodic Maintenance Procedures

- Remove the vinyl bag on the pipe.
- Check that there are no flaws, burrs, and adhesion of foreign materials on the delivery pipe [A].

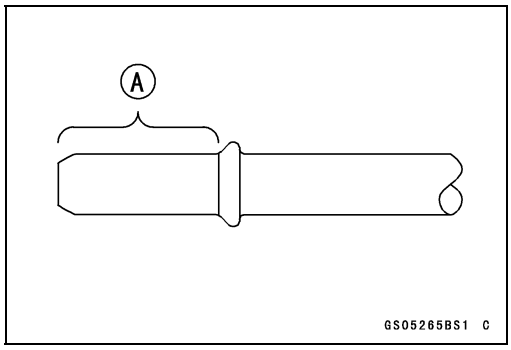

- Replace the fuel hose with a new one.
- Run the fuel hose correctly (see Cable, Wire, and Hose Routing section in the Appendix chapter).
- Insert the fuel hose joint [A] straight onto the delivery pipe [B] until the hose joint clicks.
- Push the joint lock [C].

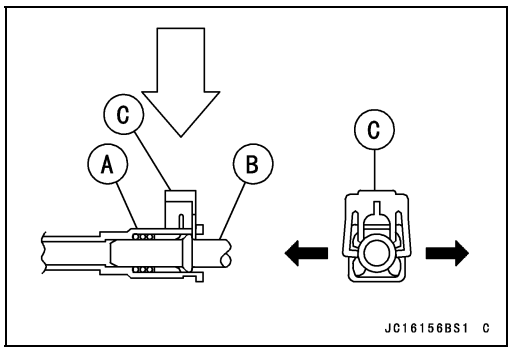

- Push and pull the fuel hose joint [A] back and forth [B] more than two times and make sure it is locked and does not come off.

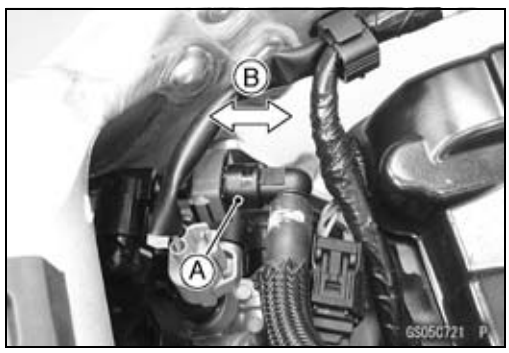

⚠ WARNING

Leaking fuel can cause a fire or explosion resulting in severe burns. Make sure the fuel hose joint is installed correctly on the delivery pipe and that it doesn't leak.

★If it comes off, reinstall the hose joint.
- Install the removed parts (see appropriate chapters).
- Start the engine and check the fuel hose for leaks.

Idle Speed Inspection

NOTICE

This motorcycle is designed for competition use only. Therefore, the radiator does not incorporate a coolant reserve tank or cooling fan. Prolonged idling of the engine with no airflow through the radiator can cause coolant loss and engine overheating resulting in possible engine damage. Any riding conditions that increase engine temperature will further reduce idling time before coolant loss occurs. These conditions include high ambient temperature, sandy or muddy terrain, or other conditions causing high engine loads at low speeds. Furthermore, warming the engine up excessively before operation, or leaving idling with the hot engine temperature after operation results in the engine overheating, too.

Periodic Maintenance Procedures

- Start the engine and warm it up thoroughly.
- With the engine idling, turn the handlebar to both sides [A].

★If handlebar movement changes the idle speed, the throttle cable may be improperly adjusted or incorrectly routed, or it may be damaged. Be sure to correct any of these conditions before riding (see Cable, Wire, and Hose Routing section in the Appendix chapter).

⚠ WARNING

Operation with improperly adjusted, incorrectly routed or damaged cables could result in an unsafe riding condition. Follow the service manual to make sure to correct any of these conditions.

- Check the idle speed, using the engine revolution tester [A] for high accuracy.

★If the idle speed is out of specified range, adjust it.

Idle Speed:
Standard: 2 000 ±50 r/min (rpm)

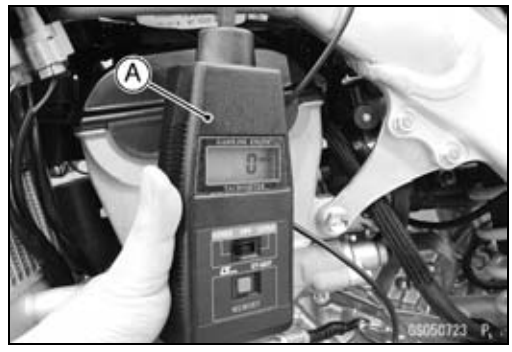

Idle Speed Adjustment

- Start the engine and warm it up thoroughly.
- Turn the idle adjusting screw [A] until the idle speed is correct.
  To increase idle speed [B]
  To decrease idle speed [C]
- Open and close the throttle a few times to make sure that the idle speed is within the specified range. Readjust if necessary.

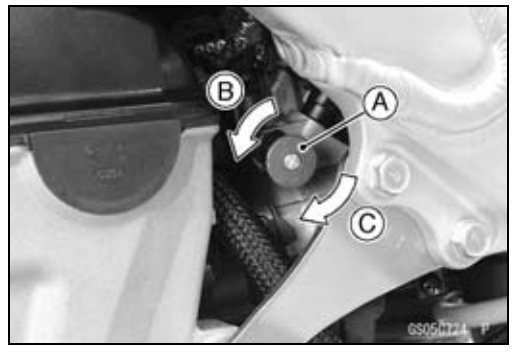

Air Cleaner Element Cleaning and Inspection

NOTE

○*In dusty areas, the element should be cleaned more frequently than recommended interval.*
○*After riding through rain or on muddy roads, the element should be cleaned immediately.*
○*Since repeated cleaning opens the pores of the element, replace it with a new one in accordance with the Periodic Maintenance Chart. Also, if there is a break in the element material or any other damage to the element, replace the element with a new one.*

⚠ WARNING

Gasoline and low flash-point solvents can be flammable and/or explosive and cause severe burns. Clean the element in a well-ventilated area, and take care that there is no spark or flame anywhere near the working areas. Do not use gasoline or low flash-point solvents to clean the element.

Periodic Maintenance Procedures

- Remove:
  Seat (see Seat Removal in the Frame chapter)
  Wing Bolt [A]
  Air Cleaner Element [B]
- Stuff a clean, lint-free towel into the air cleaner duct so no dirt is allowed to enter the throttle body assy.
- Wipe out the inside of the air cleaner housing with a clean damp towel.

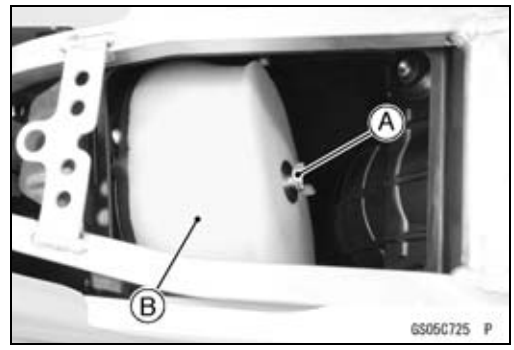

NOTICE
Check inside of the inlet tract and throttle body assy for dirt. If dirt is present, clean the intake tract and throttle body assy thoroughly. You may also need to replace the element and seal the housing and intake tract.

- Separate the element [A] from the frame [B].

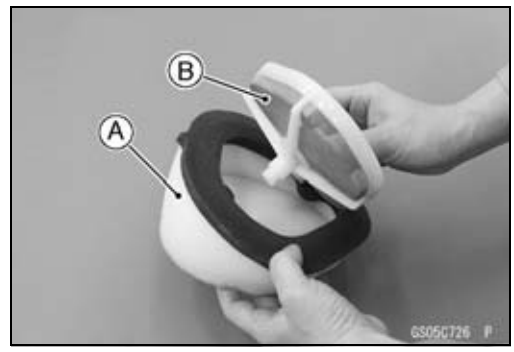

- Clean the element [A] in a bath of a high flash-point solvent using a soft bristle brush.
- Rinse the element with clean water to remove all traces of cleaning solution.

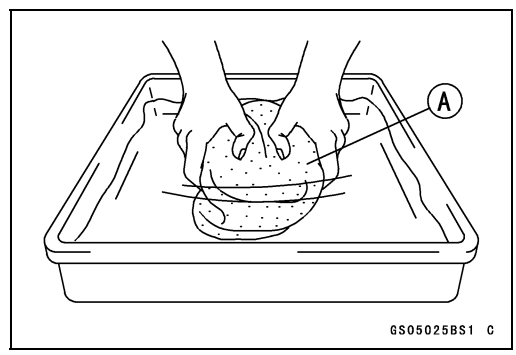

- Squeeze it dry in a clean towel [A]. Do not wring the element or blow it dry; the element can be damaged.
- Check all parts of the element for visible damage.

★If any parts of the element are damaged, replace them.

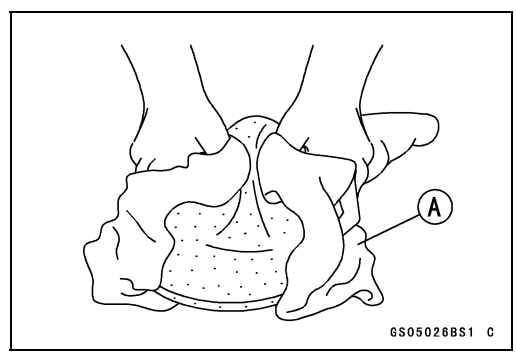

- After cleaning, saturate the element with a high-quality foam-air-filter oil, squeeze out the excess oil, then wrap it in a clean towel and squeeze it as dry as possible.

○Be careful not to tear the sponge filter.

- Assemble the element.
- Remove the towel from the air cleaner duct.

- Apply grease to all connections and screw holes in the air cleaner housing and intake tract.
- Install the element onto its frame, and coat the element lip and lip seat with a thick layer of grease [A] to assure a complete seal.

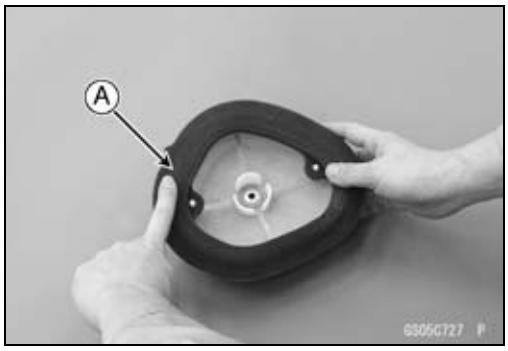

- Install the air cleaner element so that its tab [A] faces upward and its grooves [B] align with the frame [C] on the air cleaner housing.
- Tighten the wing bolt.

  Torque - Air Cleaner Element Wing Bolt (for reference): 1.2 N·m (0.12 kgf·m, 11 in·lb)
- Install the seat (see Seat Installation in the Frame chapter).

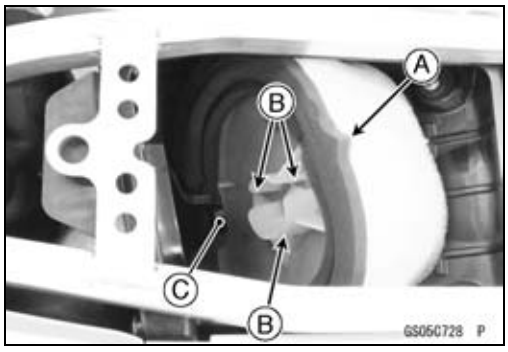

Fuel Tank Cleaning

⚠ WARNING

Gasoline and low flash-point solvents can be flammable and/or explosive and cause severe burns. Clean the tank in a well-ventilated area, and take care that there are no sparks or flame anywhere near the working area. Do not use gasoline or low flash-point solvents to clean the tank.

- Remove the fuel tank and drain the fuel (see Fuel Tank Removal in the Fuel System (DFI) chapter).
- Remove the fuel pump (see Fuel Pump Removal in the Fuel System (DFI) chapter).
- Pour some high flash-point solvent into the fuel tank and shake the tank to remove dirt and fuel deposits.
- Drain the solvent out of the tank.
- Dry the tank with compressed air.
- Install the fuel pump (see Fuel Pump Installation in the Fuel System (DFI) chapter).
- Install the fuel tank (see Fuel Tank Installation in the Fuel System (DFI) chapter).

Cooling System

⚠ WARNING

Coolant can be extremely hot and cause severe burns, is toxic and very slippery. Do not remove the radiator cap or attempt to change the coolant when the engine is hot; allow it cool completely. Immediately wipe any spilled coolant from tires, frame, engine or other painted parts. Do not ingest coolant.

Periodic Maintenance Procedures

Coolant Level Inspection

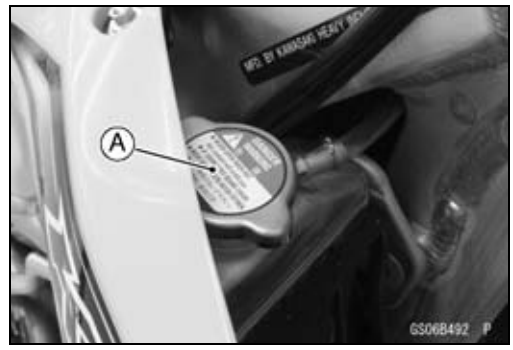

NOTE

○*Check the level when the engine is cold (room or ambient temperature).*

- Lean the motorcycle slightly until the radiator cap is level to the ground so that the radiator cap is located uppermost in order to exhaust the air accumulated in the radiator.
- Remove the radiator cap [A].

NOTE

○*Remove the radiator cap in two steps. First turn the cap counterclockwise to the first stop and wait there for a few seconds. Then push down and turn it further in the same direction and remove the cap.*

- Check the coolant level. The coolant level [A] should be at the bottom of the filler neck [B].

★If the coolant level is low, add coolant through the filler opening to the bottom of the filler neck. Install the cap.

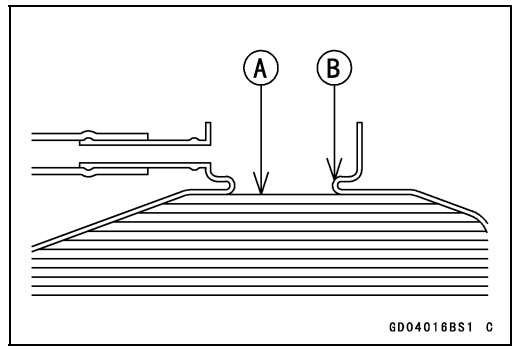

Recommended Coolant

Permanent type antifreeze (soft water and ethylene glycol plus corrosion and rust inhibitor chemicals for aluminum engines and radiators)

Water and Coolant Mixture Ratio

Soft Water: 50%

Coolant: 50%

Freezing Point: –35°C (–31°F)

Total Amount: 1.1 L (1.2 US qt)

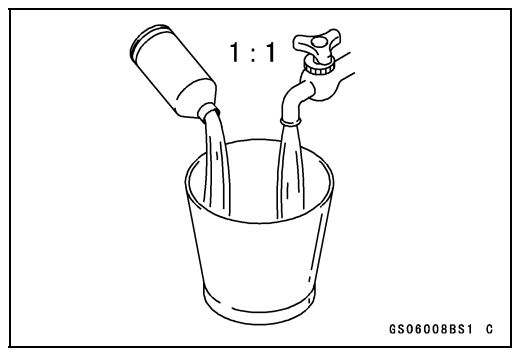

NOTICE
For refilling, add the specified mixture of coolant and soft water. Adding water alone dilutes the coolant and degrades its anticorrosion properties. The diluted coolant can attack the aluminum engine parts. In an emergency, soft water alone can be added. But the diluted coolant must be returned to the correct mixture ratio within a few days.

Coolant Deterioration Inspection

- Visually inspect the coolant.

★If whitish cotton-like wafts are observed, aluminum parts in the cooling system are corroded. If the coolant is brown, iron or steel parts are rusting. In either case, flush the cooling system.

★If the coolant gives off an abnormal smell, check for a cooling system leak. It may be caused by exhaust gas leaking into the cooling system.

Periodic Maintenance Procedures

Water Hoses and Connections Inspection

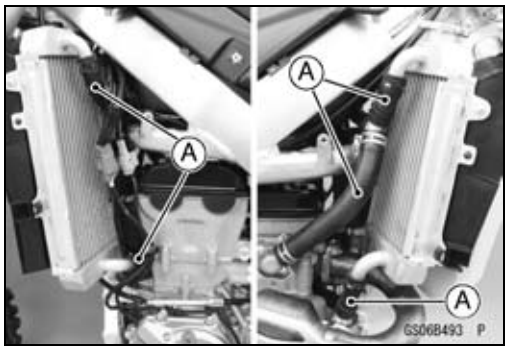

- Remove the radiator shrouds (see Radiator Shroud Removal in the Frame chapter).

○The high pressure inside the water hoses [A] can cause coolant to leak [B] or the hose to burst if the line is not properly maintained. Visually inspect the hoses for signs of deterioration. Squeeze the hoses. A hose should not be hard and brittle, nor should it be soft or swollen.

★Replace the hose if any fraying, cracks [C] or bulges [D] are noticed.

- Check that the hoses are securely connected and clamps are installed correctly.

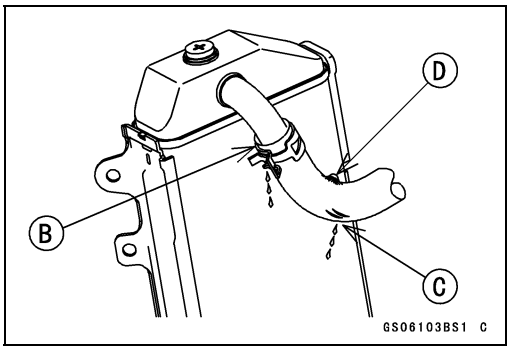

Engine Top End

Valve Clearance Inspection

NOTE

○*Valve clearance must be checked and adjusted when the engine is cold (at room temperature).*

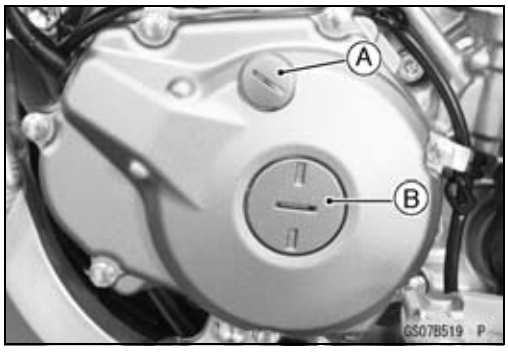

- Remove:
  Cylinder Head Cover (see Cylinder Head Cover Removal in the Engine Top End chapter)
  Timing Inspection Cap [A]
  Flywheel Nut Cap [B]

Special Tool - Filler Cap Driver: 57001-1454

- Bring the piston to the TDC of its compression stroke to inspect the valve clearance (the position at the end of the compression stroke), when the cam lobe faces outside of the camshaft.

○Place a wrench over the flywheel nut and turn it counterclockwise to align the TDC mark [A] with the center of the grooves [B] of the inspection hole.

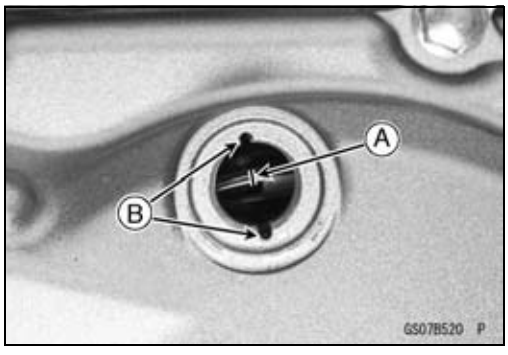

Periodic Maintenance Procedures

- Using a thickness gauge [A], measure the clearance between each cam lobe and valve lifter for all 4 valves.

○For the purpose of adjusting the valve clearances, record the measured values.

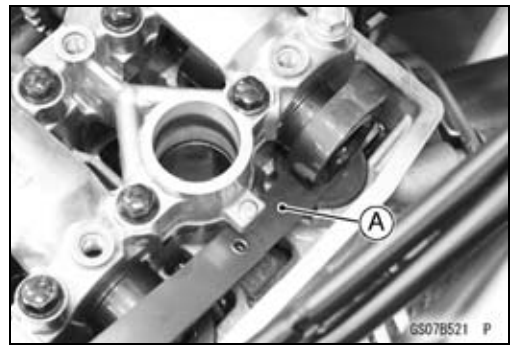

Valve Clearance
Standard:

Exhaust	**0.17 ~ 0.22 mm (0.0067 ~ 0.0087 in.)**
Intake	**0.10 ~ 0.15 mm (0.0039 ~ 0.0059 in.)**

★If the valve clearance is not within the specified range, adjust it.

Valve Clearance Adjustment

- Remove:
  Camshaft Caps [A] (see Camshaft Removal in the Engine Top End chapter)
  Camshafts [B] (see Camshaft Removal in the Engine Top End chapter)
- Remove the valve lifters [C] of the applicable valve.
- Remove the shims [D].

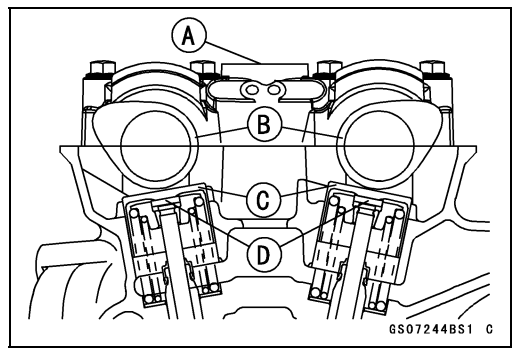

NOTE

○*Mark and record the locations of the valve lifters and shims so that they can be reinstalled in their original positions.*

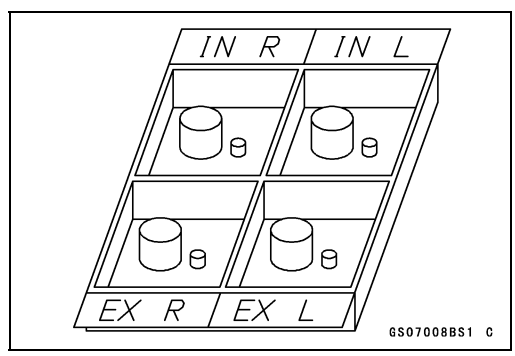

- Clean the shim to remove any dust or oil.
- Measure the thickness of the removed shim [A].
- Select a new shim thickness calculation as follows.
  a + b – c = d
  [a] Present Shim Thickness
  [b] Measured Valve Clearance
  [c] Specified Valve Clearance (Mean Value)
  Exhaust 0.195 mm
  Intake 0.125 mm
  [d] Replace Shim Thickness

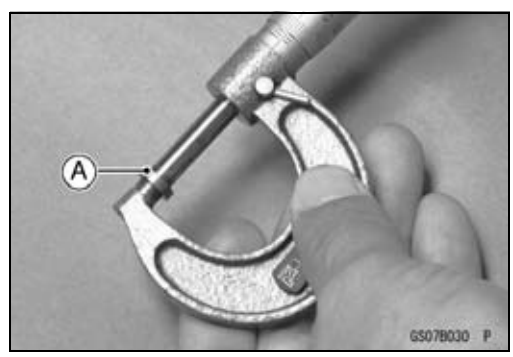

Example (Intake):
2.60 + 0.31 – 0.125 = 2.785 mm

○Exchange the shims for the 2.800 size shim.

NOTICE
Do not use the shims for another models. This could cause wear of the valve stem end and the valve stem damage.

Adjustment Shims

Thick-ness	P/No.	Mark	Thick-ness	P/No.	Mark
2.00	92025-1870	0	2.55	92025-1881	55
2.05	92025-1871	5	2.575	92025-1985	58
2.10	92025-1872	10	2.60	92025-1882	60
2.15	92025-1873	15	2.625	92180-1059	63
2.20	92025-1874	20	2.65	92025-1883	65
2.25	92025-1875	25	2.675	92180-1194	68
2.30	92025-1876	30	2.70	92025-1884	70
2.35	92025-1877	35	2.725	92180-1195	73
2.375	92180-1058	38	2.75	92025-1885	75
2.40	92025-1878	40	2.775	92180-1196	78
2.425	92025-1982	43	2.80	92025-1886	80
2.45	92025-1879	45	2.85	92025-1887	85
2.475	92025-1983	48	2.90	92025-1888	90
2.50	92025-1880	50	2.95	92025-1889	95
2.525	92025-1984	53	3.00	92025-1890	00

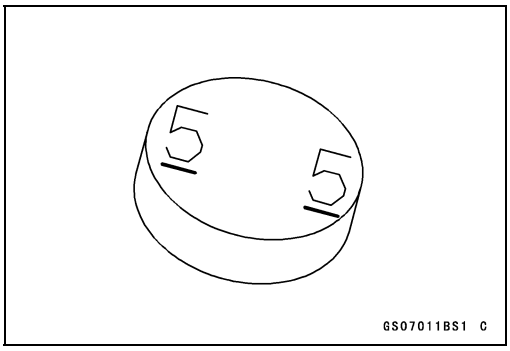

NOTE

○*Be sure to remeasure the clearance after selecting a shim. The clearance can be out of the specified range because of the shim tolerance.*
○*If there is no valve clearance, use a shim that is a few sizes smaller, and remeasure the valve clearance.*

- Install the shim.
○Turn the marked side [A] to upside.
○Apply engine oil to the shim to keep the shim in place during camshaft installation.

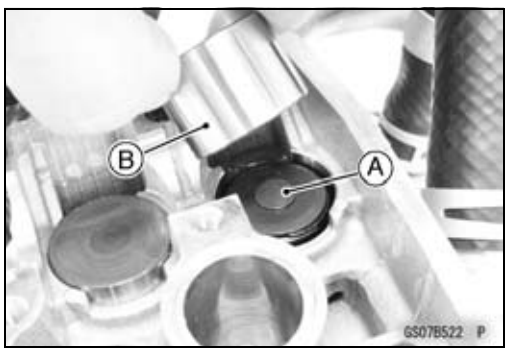

NOTICE

Do not put shim stock under the shim. This may cause the shim to pop out at high rpm, causing extensive engine damage.
Do not grind the shim. This may cause it to fracture, causing extensive engine damage.

- Apply engine oil to the valve lifter [B] surface and install the lifter.
- Install:
  Camshafts (see Camshaft Installation in the Engine Top End chapter)
  Camshaft Caps (see Camshaft Installation in the Engine Top End chapter)
- Recheck the valve clearance and readjust if necessary.
- Install the removed parts (see appropriate chapters).

Periodic Maintenance Procedures

Cylinder Head Warp Inspection

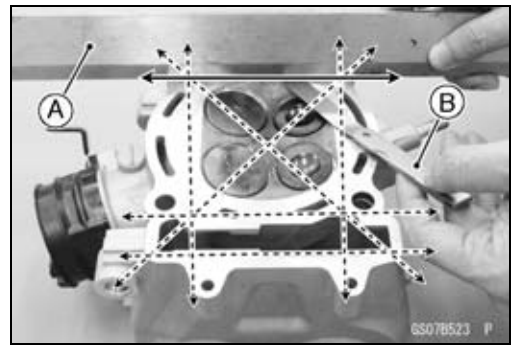

- Remove the cylinder head (see Cylinder Head Removal in the Engine Top End chapter).
- Lay a straightedge [A] across the lower surface of the head at several different points, and measure warp by inserting a thickness gauge [B] between the straightedge and head.

Cylinder Head Warp
Service Limit: 0.05 mm (0.0020 in.)

★If warp exceeds the service limit, repair the mating surface. Replace the cylinder head if the mating surface is badly damaged.

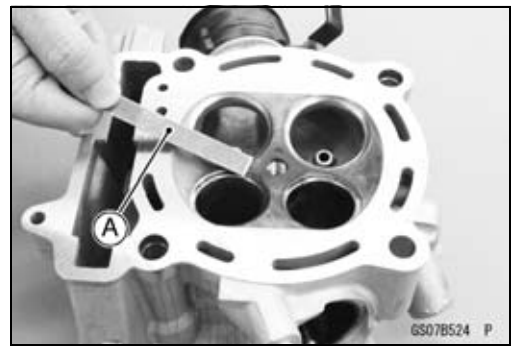

- Remove the valves (see Valve Removal in the Engine Top End chapter).
- Scrape the carbon out of the combustion chamber and exhaust port with a scraper [A] or a suitable tool.
- Clean the cylinder head, using high flash-point solvent.
- Blow out any particles which may obstruct the oil passage in the cylinder head using compressed air.
- Install the valves (see Valve Installation in the Engine Top End chapter).

Cylinder Wear Inspection

NOTE

○*Measure the cylinder inside diameter when the cylinder is cold (at room temperature).*

- Visually inspect the inside of the cylinder for scratches and abnormal wear.

★If the cylinder is damaged or badly worn, replace it with a new one.

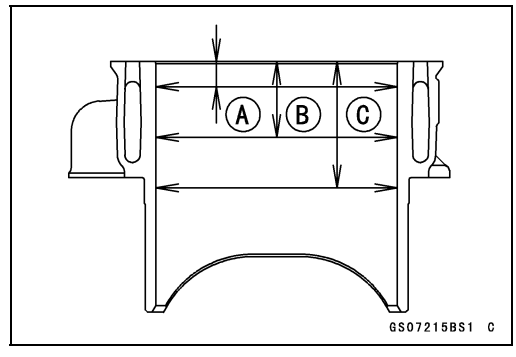

- Take a side-to-side and a front-to-back measurement as shown (total 6 measurements).

○The cylinder wear is uneven in different places.

10 mm (0.39 in.) [A]
30 mm (1.2 in.) [B]
50 mm (2.0 in.) [C]

Cylinder Inside Diameter

Standard:	**96.025 ~ 96.037 mm (3.7805 ~ 3.7810 in.), and less than 0.01 mm (0.0004 in.) difference between any two measurements.**
Service Limit:	**96.12 mm (3.784 in.), or more than 0.05 mm (0.002 in.) difference between any two measurements.**

★If any of the cylinder inside diameter measurements exceeds the service limit, the cylinder must be replaced with a new one.

○Since the PLATING cylinder cannot be bored or honed.

Piston/Cylinder Clearance Inspection

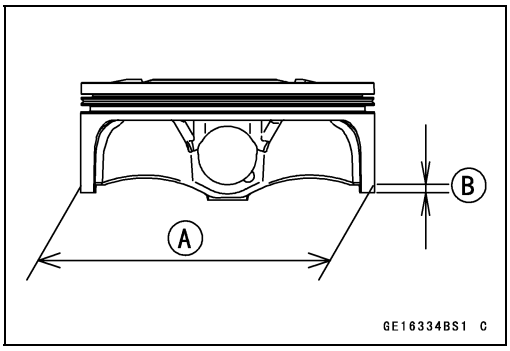

The piston/cylinder clearance is measured whenever a piston or cylinder is replaced with a new one. The standard piston/cylinder clearance must be adhered to whenever the cylinder is replaced.

If only a piston is replaced, the clearance may exceed the standard slightly. But it must be within the standard, in order to avoid piston seizure.

The most accurate way to find the piston clearance is by making separate piston and cylinder diameter measurements and then computing the difference between the two values. Measure the outside diameter [A] of the piston 7.5 mm (0.30 in.) [B] up from the bottom of the piston at a right angle to the direction of the piston pin, and measure the cylinder diameter at the very bottom of the cylinder.

Piston/Cylinder Clearance
Standard: 0.045 ~ 0.067 mm (0.0018 ~ 0.0026 in.)

Piston, Piston Ring and Piston Pin Replacement

- Refer to the Cylinder and Piston section in the Engine Top End chapter.

Exhaust System Inspection

- The exhaust system, in particular the muffler body, is designed to reduce exhaust noise and conduct the exhaust gases away from the rider while minimizing power loss. If carbon has built up inside the muffler body, exhaust efficiency is reduced, causing engine performance to drop.

★If the muffler body is badly damaged, dented, cracked or rusted, replace it.

★If the exhaust noise becomes too loud or engine performance drops, replace the silencer wool.

Silencer Wool Replacement

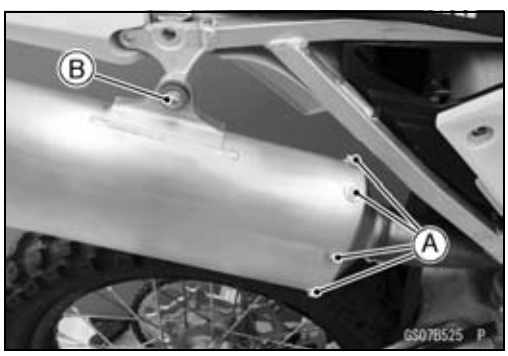

- Remove:
  Right Side Cover (see Side Cover Removal in the Frame chapter)
  Muffler Cover Bolts [A]
  Muffler Mounting Bolt [B]

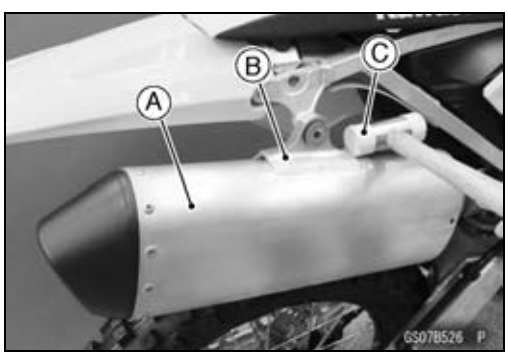

- Remove the muffler cover [A].

○Tap the bracket [B] with a plastic hammer [C] to separate the cover and pipe.

Periodic Maintenance Procedures

- Remove the silencer wool [A] and discard it.

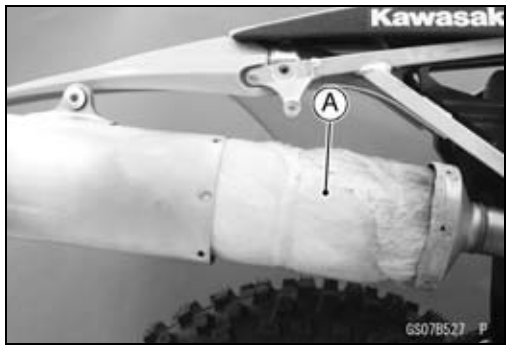

- Using a high flash-point solvent, clean off any oil or dirt that may be on the liquid gasket coating area. Dry them with a clean cloth.
- Apply liquid gasket to the mating surface [A].

  Sealant - Liquid Gasket, TB1215: 92104-1065

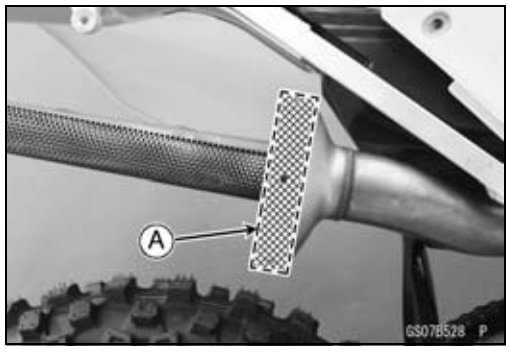

- Replace the silencer wool with a new one and install it.
- Install the muffler cover [A].
- Apply a non-permanent locking agent to the muffler cover bolts [B], and tighten them.

  Torque - Muffler Cover Bolts: 10 N·m (1.0 kgf·m, 89 in·lb)
- Tighten:

  Torque - Muffler Mounting Bolt [C]: 21 N·m (2.1 kgf·m, 15 ft·lb)
- Install:

  Right Side Cover (see Side Cover Installation in the Frame chapter)

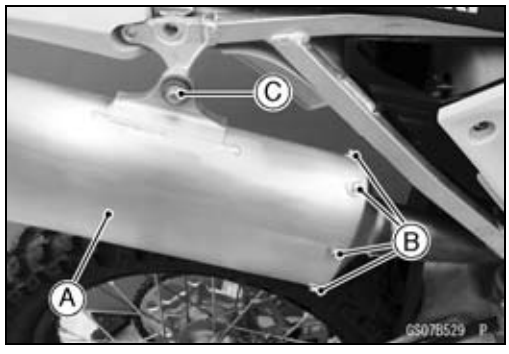

Clutch

Clutch Operation Inspection

Clutch Lever (Clutch Cable) Free Play Inspection

- Slide the clutch cable adjuster cover [A] out of place.
- Check that the clutch cable upper end [B] is fully seated in the adjusting bolt [C].
- Install the adjuster cover to original position.

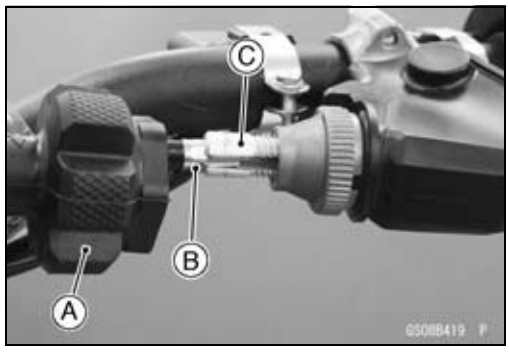

- Pull the clutch lever [A] lightly, and check the flee play [B].

Clutch Lever Free Play
Standard: 8 ~ 13 mm (0.31 ~ 0.51 in.)

★If the play is too wide, the clutch may not release fully. If the play is too narrow, the clutch may not engage fully. In either case, adjust it.

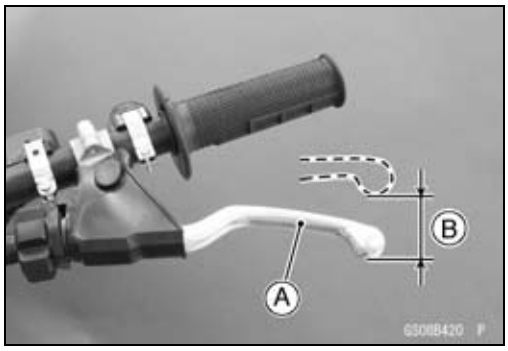

Clutch Lever (Clutch Cable) Free Play Adjustment

- Turn the clutch cable adjuster [A] so that the clutch lever will have **8 ~ 13 mm (0.31 ~ 0.51 in.)** of play.

NOTICE
Be sure that the outer cable end at the clutch lever is fully seated in the adjuster at the clutch lever, or it could slip into the place later, creating enough cable play to prevent clutch disengagement.

★If the free play can not be adjusted with the clutch cable adjuster, use the adjusting nut.

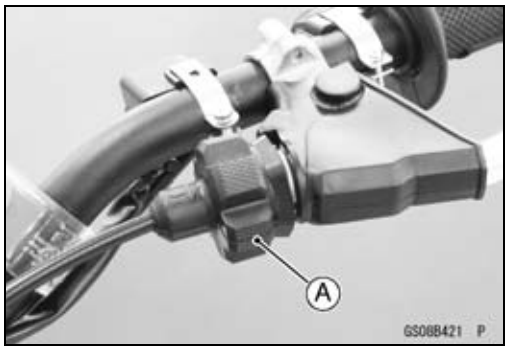

- Turn the adjusting nut [A] at the clutch cable lower end so that clutch lever has **8 ~ 13 mm (0.31 ~ 0.51 in.)** of play.
- Tighten the locknut, and start the engine and check that the clutch does not slip and that it release properly.

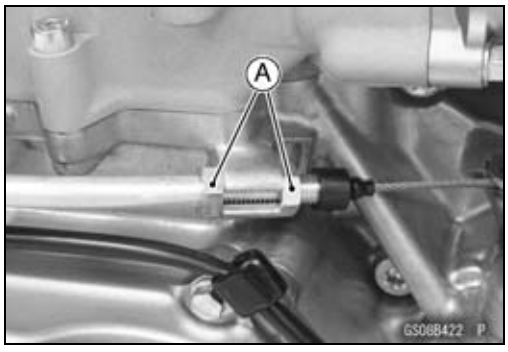

Clutch Plates Inspection

- Remove the clutch plates (see Clutch Removal in the Clutch chapter).
- Visually inspect the friction and steel plates to see if they show signs of seizure, uneven wear or any other damage.

★If any plates show signs of damage, replace the friction plates and steel plates as a set.

- Measure the thickness of the friction plate [A] at several points with vernier calipers.

Friction Plate Thickness
Standard: 2.92 ~ 3.08 mm (0.115 ~ 0.121 in.)
Service Limit: 2.7 mm (0.11 in.)

★If they have worn past the service limit, replace them with new ones.

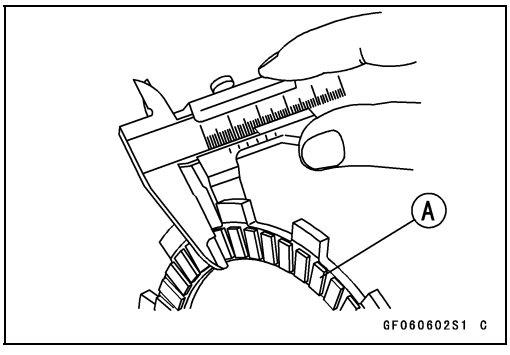

Periodic Maintenance Procedures

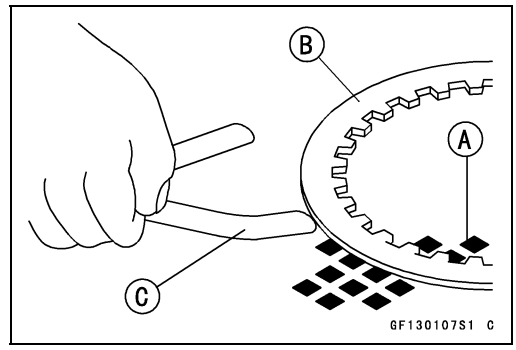

- Place each friction plate or steel plate on a surface plate [A].
- Measure the gap between the surface plate and each friction plate or steel plate [B] with a thickness gauge [C]. The gap is the amount of friction or steel plate warp.

Friction and Steel Plates Warp

Standard:

Friction Plate	**0.15 mm (0.0059 in.) or less**
Steel Plate	**0.20 mm (0.0079 in.) or less**

Service Limit:

Friction Plate	**0.3 mm (0.012 in.)**
Steel Plate	**0.3 mm (0.012 in.)**

★If any plate is warped over the service limit, replace it with a new one.

Engine Lubrication System

⚠ WARNING

Vehicle operation with insufficient, deteriorated, or contaminated engine oil will cause accelerated wear and may result in engine seizure, accident, and injury. Check the oil level before each use and change the oil and filter according to the periodic maintenance chart.

Engine Oil Change

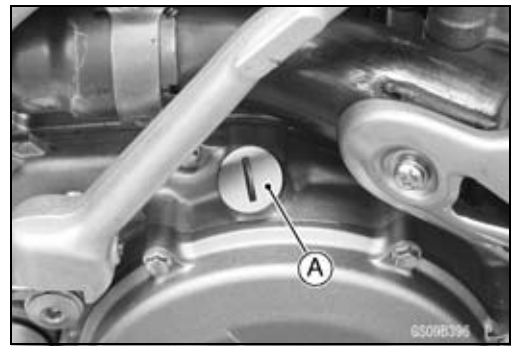

- Warm up the engine thoroughly so that the oil will pick up any sediment and drain easily. Then stop the engine.
- Place an oil pan beneath the engine.
- Remove the oil filler cap [A].

Special Tool - Filler Cap Driver: 57001-1454

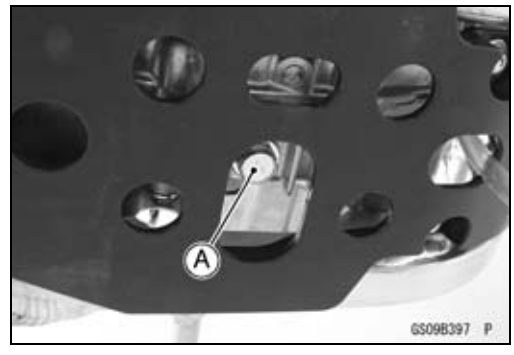

- Remove the engine oil drain bolt [A] from the bottom of the engine, and let the oil drain completely.

NOTE

○*Hold the motorcycle upright so that the oil may drain completely.*

- Replace the drain bolt gaskets with new ones.
- Install the drain bolts with the gaskets.
- Tighten:

Torque - Engine Oil Drain Bolt: 20 N·m (2.0 kgf·m, 15 ft·lb)

Periodic Maintenance Procedures

- Pour in the specified type and amount of oil.

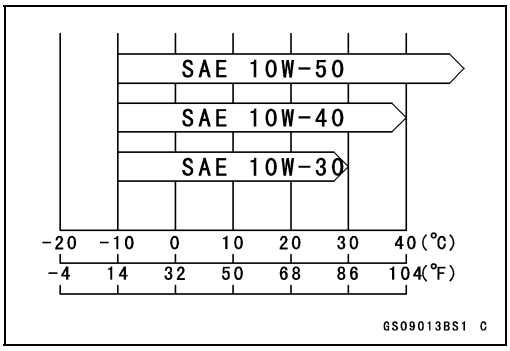

Recommended Engine Oil

Type:	**Castrol "POWER1 Racing 4T" 5W-40 or API SG, SH, SJ, SL or SM with JASO MA, MA1 or MA2**
Viscosity:	**SAE 10W-30, 10W-40 or 10W-50**
Capacity:	**0.8 L (0.8 US qt) (when filter is not removed)**
	0.9 L (1.0 US qt) (when filter is removed)
	1.0 L (1.1 US qt) (when engine is completely dry)

NOTE

○*Do not add any chemical additive to the oil. Oils fulfilling the above requirements are fully formulated and provide adequate lubrication for both the engine and the clutch.*
○*The oil viscosity may need to be changed to accommodate atmospheric conditions in your riding area.*

- Check the oil level (see Oil Level Inspection in the Engine Lubrication System chapter).
- Replace the oil filler plug O-ring with a new one.
- Apply grease to the O-ring.
- Tighten:

Special Tool - Filler Cap Driver: 57001-1454

Torque - Oil Filler Plug: 3.5 N·m (0.36 kgf·m, 31 in·lb)

Oil Filter Change

- Drain:
  Engine Oil (see Engine Oil Change)
- Remove:
  Oil Filter Cap Bolts [A]
  Oil Filter Cap [B]
  Spring

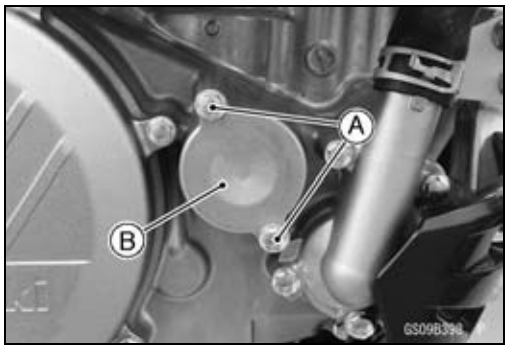

- Remove the oil filter [A].

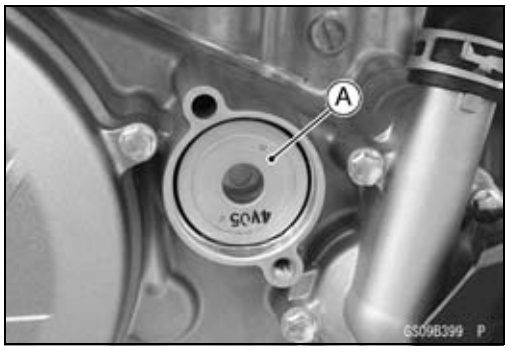

Periodic Maintenance Procedures

- Replace the oil filter [A] with a new one.
- Apply grease to the grommet [B].
- Install the oil filter so that grommet faces engine side.

NOTICE
Inside out installation stop oil flow, causing engine seizure.

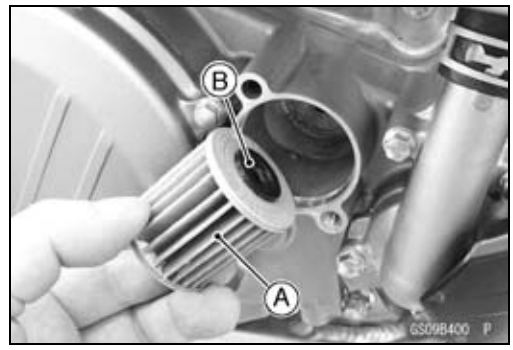

- Replace the oil filter cap O-ring [A] with a new one.
- Apply grease to the O-ring.
- Install:
  Spring [B]
  Oil Filter Cap [C]
- Tighten:

  Torque - Oil Filter Cap Bolts: 12 N·m (1.2 kgf·m, 106 in·lb)
- Pour the specified engine oil (see Engine Oil Change).

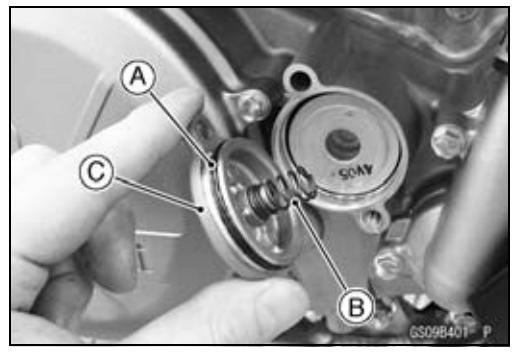

Breather Hose Inspection

- Be certain that the breather hose [A] is routed without being flattened or kinked and is connected correctly.

★If it is not, correct it.

- Inspect the breather hose for damage or signs of deterioration.

○This hose should not be hard and brittle, nor should be soft swollen.

★Replace it if any damage is noticed.

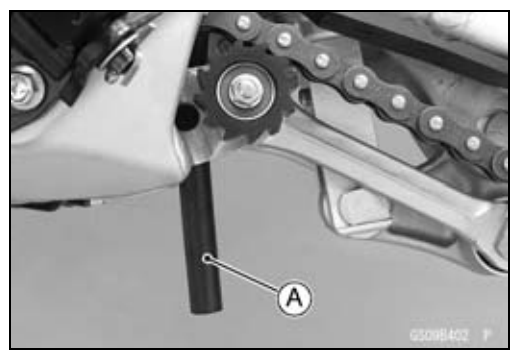

Crankshaft/Transmission

Crankshaft Inspection

- Remove:
  Cylinder Head (see Cylinder Head Removal in the Engine Top End chapter)
  Cylinder (see Cylinder Removal in the Engine Top End chapter)
  Piston (see Piston Removal in the Engine Top End chapter)
- Make sure that the crankshaft rotate [A] smoothly (in the neutral position).

★If the crankshaft will not turn smoothly, check the connecting rod big end side clearance.

★If the connecting rod big end side clearance is good, check the bearings (see Bearing Inspection in the Crankshaft/Transmission chapter).

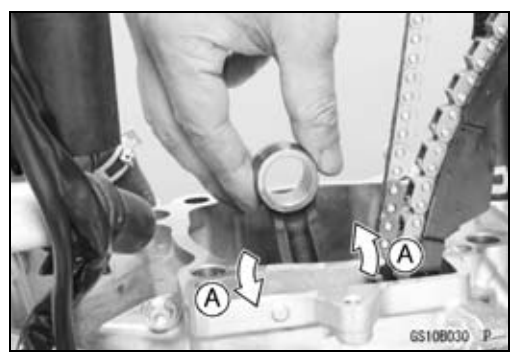

Connecting Rod Big End Side Clearance

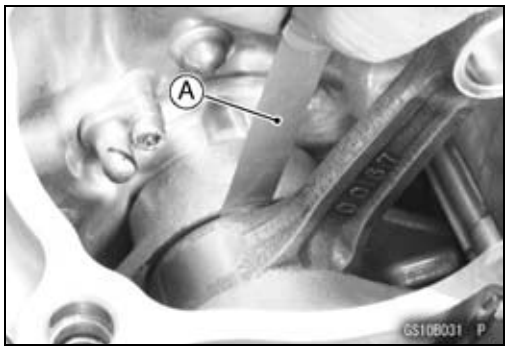

- Measure the connecting rod big end side clearance at right side of big end using a thickness gauge [A].

Connecting Rod Big End Side Clearance
Standard: 0.25 ~ 0.35 mm (0.0098 ~ 0.0138 in.)
Service Limit: 0.6 mm (0.02 in.)

★If the clearance exceeds the service limit, replace the crankshaft assembly or reassemble the crankshaft.

- Make sure that the crankshaft rotates smoothly after assembling the engine.

Wheels/Tires

Air Pressure Inspection/Adjustment

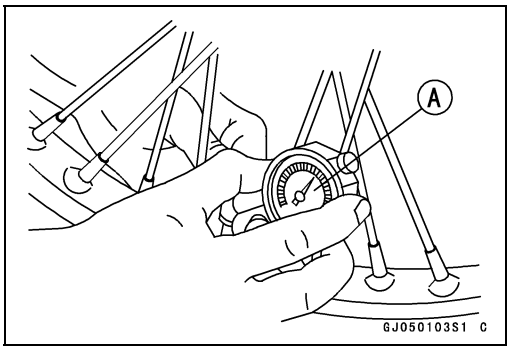

- Using an air pressure gauge [A], measure the air pressure when the tires are cold.
- Adjust the tire air pressure to suit track conditions and rider preference, but do not stray too far from the recommended pressure.

Track Condition	Tire Pressure
When the track is wet, muddy, sandy or slippery, reduce the tire pressure to increase the tire tread surface on the ground.	80 kPa (0.8 kgf/cm², 12 psi) ↑
When the track is pebbly or hard, increase the tire pressure to prevent damage or punctures, through the tires will skid more easily.	↓ 100 kPa (1.0 kgf/cm², 14 psi)

Periodic Maintenance Procedures

Tires Inspection

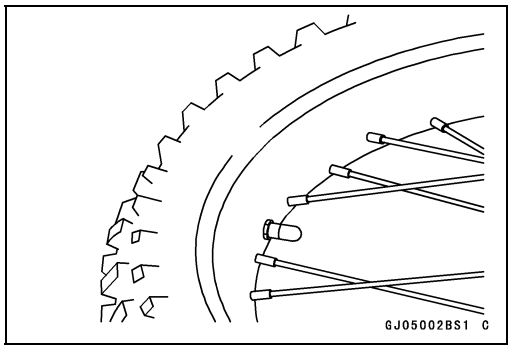

- Remove any imbedded stones or other foreign particles from the tread.

★Repair or replace with a new one if necessary.

- Visually inspect the tire for cracks and cuts.

★Replace the tire, if any damage are noticed.

○Swelling or high spots indicate internal damage, requiring tire replacement.

⚠ WARNING

Some replacement tires may adversely affect handling and cause an accident resulting in serious injury or death. To ensure proper handling and stability, use only the recommended standard tires for replacement, inflated to the standard pressure.

NOTE

○*Check and balance the wheel when a tire is replaced with a new one.*

Standard Tire

Front:

Size	**80/100-21 51M**
Make	**BRIDGESTONE**
Type	**M403, Tube**

Rear:

Size	**120/80-19 63M**
Make	**BRIDGESTONE**
Type	**M404, Tube**

Spoke Tightness Inspection

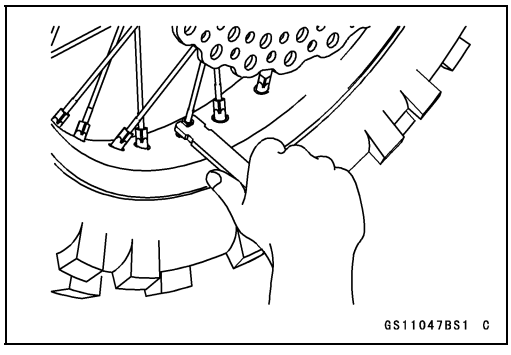

- Check that all the spokes are tightened evenly.

★If spoke tightness is uneven or loose, tighten the spoke nipples evenly.

Torque - Spoke Nipples: 3.9 N·m (0.40 kgf·m, 35 in·lb)

- Check the rim runout (see Rim Runout Inspection).

⚠ WARNING

A missing spoke places an additional load on the other spokes, which will eventually cause other spokes to break, creating the potential for an accident resulting in serious injury or death. Immediately replace any broken spoke(s).

Rim Runout Inspection

- Place the jack under the frame so that the front/rear wheel off the ground.

Special Tools - Jack: 57001-1238
Jack Attachment: 57001-1608

- Inspect the rim for cracks, dents, bending, or warping.

★If there is any damage to the rim, it must be replaced.

- Set a dial gauge against the side of the rim, and rotate the rim to measure the axial runout [A].
○The difference between the highest and lowest dial readings is the amount of runout.
- Set a dial gauge against the outer circumference of the rim, and rotate the rim to measure radial runout [B].

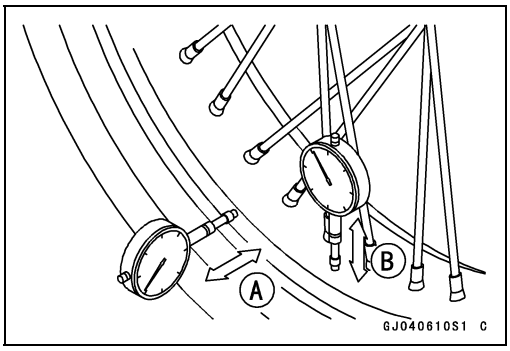

Rim Runout (with tire installed)

Standard:

Axial	**TIR 1.0 mm (0.04 in.) or less**
Radial	**TIR 1.0 mm (0.04 in.) or less**

Service Limit:

Axial	**TIR 2.0 mm (0.08 in.)**
Radial	**TIR 2.0 mm (0.08 in.)**

★If rim runout exceeds the service limit, check the wheel bearings first.
★If the problem is not due to the bearings, loosen some spokes and tighten others within the standard torque.

Wheel Bearing Inspection

- Raise the front/rear wheel off the ground using the jack.

Special Tools - Jack: 57001-1238
Jack Attachment: 57001-1608

- Rotate [A] the wheel lightly, and check for roughness, binding or noise.
★If any damage is found, replace the hub bearing.

- Turn the handlebar until the handlebar does not move to either side (front wheel).
- The wheel edge is moved [A] to one direction gripping the edge of the wheel by both hands and the play of the wheel bearing is checked.
★If the play is found, replace the bearing.

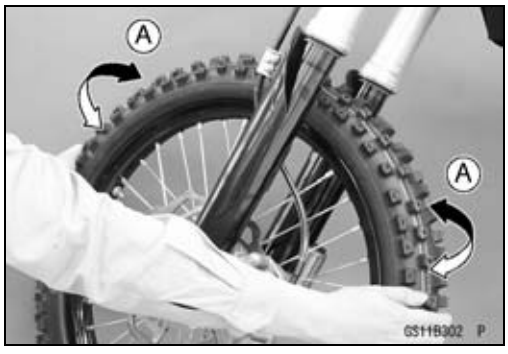

Final Drive

Drive Chain Wear Inspection

- Rotate the rear wheel to inspect the drive chain for damaged rollers, and loose pins and links.
★If there is any irregularity, replace the drive chain.
★Lubricate the drive chain if it appears dry.
Bushing [A]
Roller [B]
Pin [C]
Pin Link [D]
Roller Link [E]

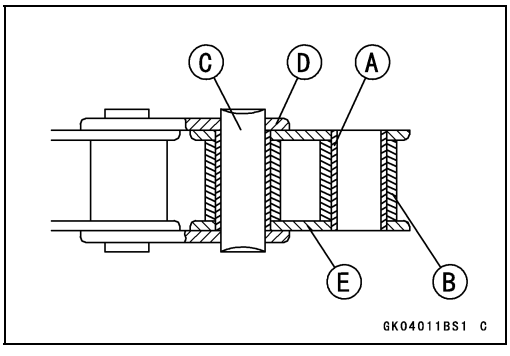

Periodic Maintenance Procedures

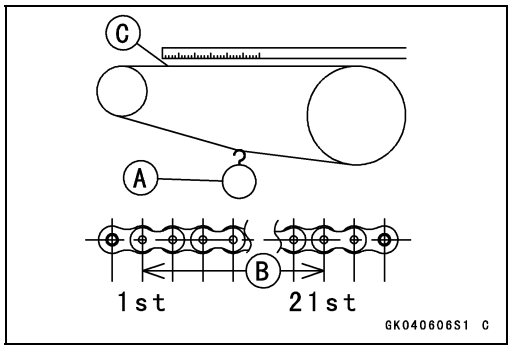

- Stretch the chain taut by hanging a 98 N (10 kg, 20 lb) weight [A] on the chain.
- Measure the length of 20 links [B] on the straight part [C] of the chain from the pin center of the 1st pin to the pin center of the 21st pin. Since the chain may wear unevenly, take measurements at several places.

Chain 20-link Length
Standard: 317.5 ~ 318.2 mm (12.50 ~ 12.53 in.)
Service Limit: 323 mm (12.7 in.)

★If any measurements exceed the service limit, replace the chain. Also, replace the front and rear sprockets when the drive chain is replaced.

⚠ WARNING

A chain that breaks or jumps off the sprockets could snag on the engine sprocket or lock the rear wheel, severely damaging the motorcycle and causing it to go out of control. Inspect the chain for damage and proper adjustment before each ride. If chain wear exceeds the service limit, replace it with the standard chain.

Standard Chain
Make: DAIDO
Type: DID 520DMA4
Link: 114 Links

Drive Chain Slack Inspection

- Using the jack, raise the rear wheel until the rear shock absorber stretched fully.

Special Tools - Jack: 57001-1238
Jack Attachment: 57001-1608

- Check the wheel alignment (see Wheel Alignment Inspection in the Final Drive chapter), and adjust it if necessary (see Wheel Alignment Adjustment in the Final Drive chapter).

NOTE

○*Clean the drive chain if it is dirty, and lubricate it if it appears dry.*

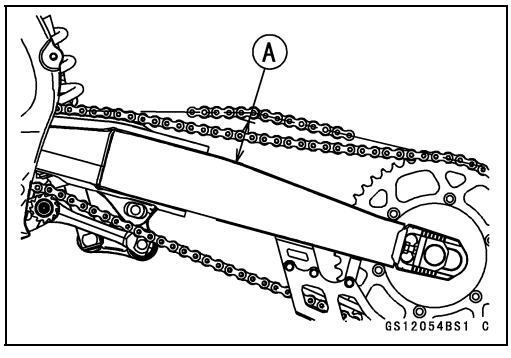

- Rotate the rear wheel to find the position where the chain is tightest (because it wears unevenly).
- Measure the space (chain slack) [A] between the bottom of the chain and the swingarm as shown in the figure.

Chain Slack
Standard: 52 ~ 58 mm (2.0 ~ 2.3 in.)

★If the drive chain slack exceeds the standard, adjust it.

Rear Axle Nut Inspection

- Visually inspect the rear axle nut for deformation or damage at the friction ring [A] and caulking [B]. If it is deformed or damaged, replace the axle nut with a new one.

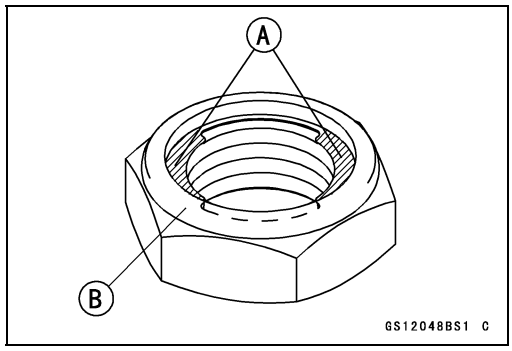

Drive Chain Slack Adjustment

- Loosen the rear axle nut [A].
- Loosen the left and right chain adjuster locknuts [B].

★If the chain is too tight, back out the left and right chain adjusting bolts [C] evenly, and push the wheel forward until the chain is too loose.

★If the chain is too loose, turn both chain adjusting bolts evenly until the drive chain has the correct amount of slack. To keep the chain and wheel properly aligned, the notch on the left chain adjuster should align with the same swingarm mark [D] as the right chain adjuster notch [E].

- Check the wheel alignment (see Wheel Alignment Inspection in the Final Drive chapter).

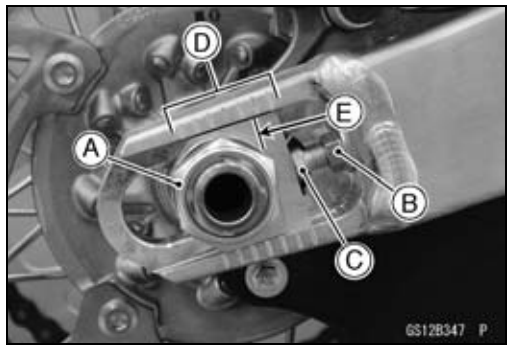

⚠ WARNING

Misalignment of the wheel will result in abnormal wear and may result in an unsafe riding condition. Be sure the wheel is properly aligned.

- Tighten both chain adjuster locknuts.

  Torque - Chain Adjuster Locknut: 15 N·m (1.5 kgf·m, 11 ft·lb)

- Inspect the rear axle nut (see Rear Axle Nut Inspection).
- Tighten:

  Torque - Rear Axle Nut: 110 N·m (11.2 kgf·m, 81.1 ft·lb)

- Rotate the wheel, measure the chain slack again at the tightest position, and readjust if necessary.

- Check the rear brake effectiveness.

NOTE

○*In wet and muddy conditions, mud sticks to the chain and sprockets resulting in an overly tight chain, and the chain may break. To prevent this, adjust the chain to 62 ~ 68 mm (2.4 ~ 2.7 in.) of slack whenever necessary.*

Drive Chain Lubrication

○The chain should be lubricated with a lubricant which will both prevent the exterior from rusting and also absorb shock and reduce friction in the interior of the chain.

★If the chain is especially dirty, it should be washed in diesel oil or kerosene, and afterward soaked in a heavy oil. Shake the chain while it is in the oil so that oil will penetrate into the inside of each roller.

- An effective, good quality lubricant specially formulated for chains is best for regular chain lubrication.

Periodic Maintenance Procedures

- If a special lubricant is not available, a heavy oil such as SAE90 is preferred to a lighter oil because it will stay on the chain longer and provide better lubrication.
- Apply oil to the sides of the rollers so that oil will penetrate into the rollers and bushings.
- Wipe off any excess oil.
  Oil Applied Area [A]

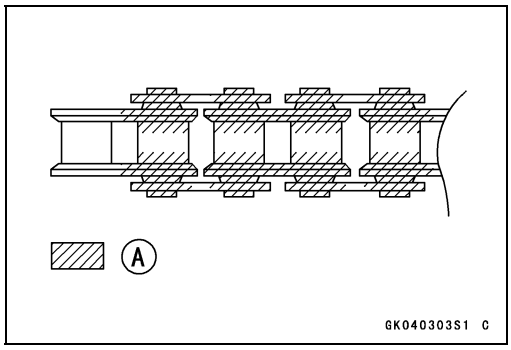

Sprocket Wear Inspection

- Visually inspect the front and rear sprocket teeth for wear and damage.

★If they are worn as illustrated or damaged, replace the sprocket, and inspect the drive chain wear.
  Worn Tooth (Engine Sprocket) [A]
  Worn Tooth (Rear Sprocket) [B]
  Direction of Rotation [C]

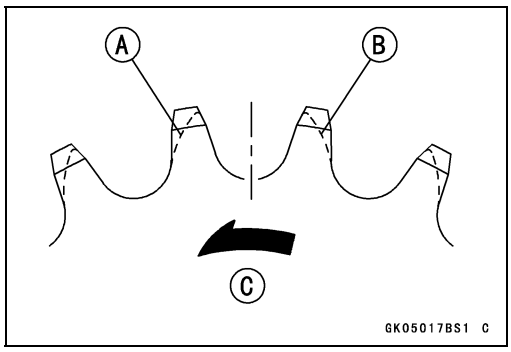

NOTE

○*If a sprocket requires replacement, the chain is probably worn also. When replacing a sprocket, inspect the chain.*

Rear Sprocket Warp (Runout) Inspection

- Using the jack, raise the rear wheel off the ground.

Special Tools - Jack: 57001-1238
Jack Attachment: 57001-1608

- Set a dial gauge [A] against the rear sprocket [B] near the teeth as shown.
- Rotate [C] the rear wheel slowly to measure the sprocket warp (runout).

○The difference between the highest and lowest dial gauge readings is the amount of warp (runout).

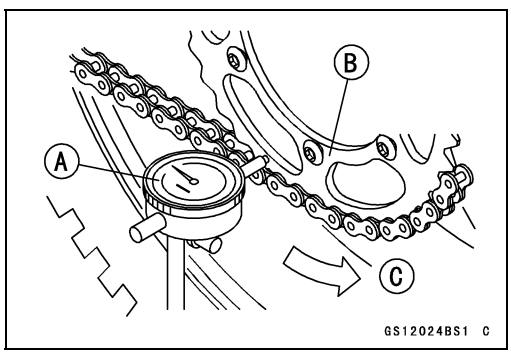

Rear Sprocket Warp (Runout)

Standard:	**TIR 0.4 mm (0.016 in.) or less**
Service Limit:	**TIR 0.5 mm (0.020 in.)**

★If the runout exceeds the service limit, replace the rear sprocket.

Brakes

Brake Lever and Pedal Adjustment

- Slide the dust cover [A].
- Adjust the brake lever to suit you.

○Loosen the adjuster locknut [B] and turn the adjuster [C] to either side.

- After adjustment, tighten the locknut.

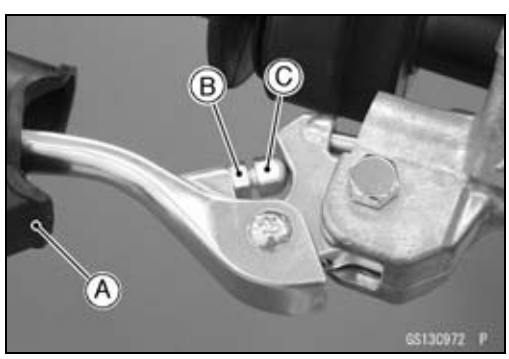

Periodic Maintenance Procedures

- Measure the length [A] indicated in the figure.

Rear Master Cylinder Push Rod Length
Standard: 68.5 ±1 mm (2.70 ±0.04 in.)

★If it is not within the standard, adjust the push rod in the master cylinder as follows.

NOTE

○*Usually it is not necessary to adjust the pedal position, but always adjust it when the master cylinder is disassembled or pedal position is incorrect.*

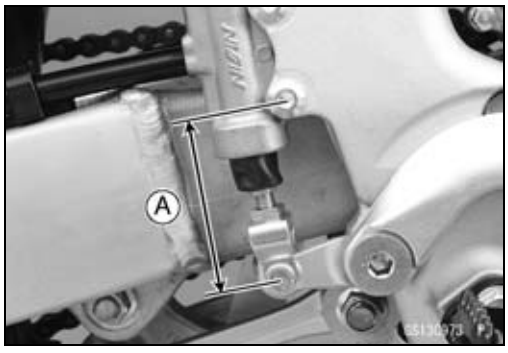

- Loosen the push rod locknut [A].
- Turn the adjusting bolt [B] to obtain the specified length.
- Tighten the locknut.

Torque - Rear Master Cylinder Push Rod Locknut: 17 N·m (1.7 kgf·m, 13 ft·lb)

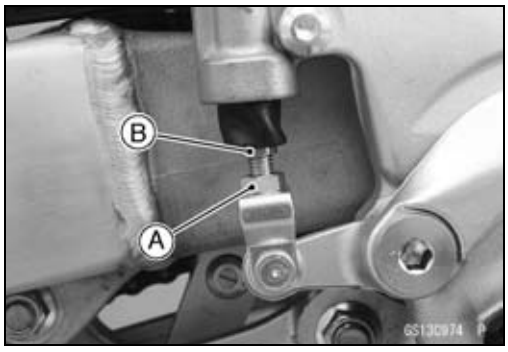

Periodic Maintenance Procedures

Brake Fluid Level Inspection

- Check the brake fluid level in the front or rear brake reservoir [A] and the front or rear reservoir must be kept above the lower level line [B].

NOTE

○*Hold the reservoir horizontal when checking brake fluid level.*

NOTICE

Brake fluid quickly damages painted plastic surfaces; any spilled fluid should be completely washed away immediately.

★If the fluid level in front or rear reservoir is lower than the lower level line, fill the reservoir to the upper level line.

- Inside the reservoir is stopped end showing the upper level line [C].

⚠ WARNING

Mixing brands and types of brake fluid can reduce the brake system's effectiveness and cause an accident resulting in injury or death. Do not mix two brands of brake fluid. Change the brake fluid in the brake line completely if the brake fluid must be refilled but the type and brand of the brake fluid that is already in the reservoir are unidentified.

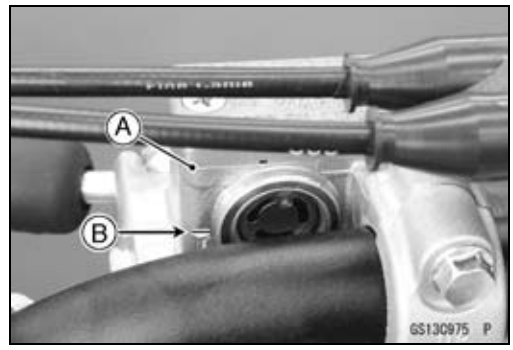

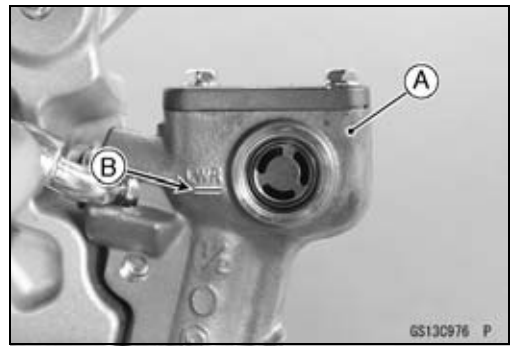

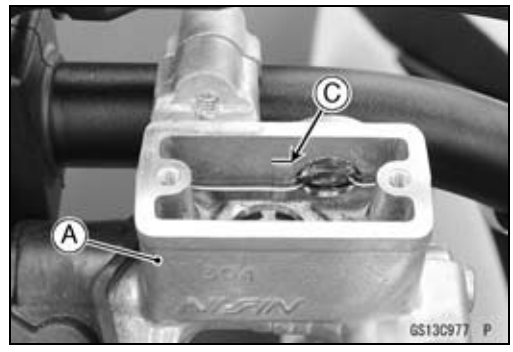

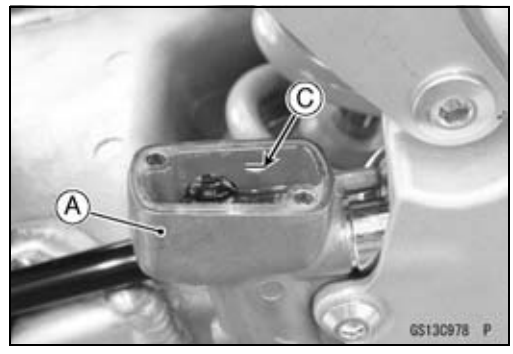

Periodic Maintenance Procedures

Brake Fluid Change

⚠ WARNING

When working with the disc brake, observe the precautions listed below.

- **Never reuse old brake fluid.**
- **Do not use fluid from a container that has been left unsealed or that has been open for a long time.**
- **Do not mix two types and brands of fluid for use in the brake. This lowers the brake fluid boiling point and could cause the brake to be ineffective. It may also cause the rubber brake parts to deteriorate.**
- **Don't leave the reservoir cap off for any length of time to avoid moisture contamination of the fluid.**
- **Don't change the fluid in the rain or when a strong wind is blowing.**
- **Except for the disc pads and disc, use only disc brake fluid, isopropyl alcohol, or ethyl alcohol for cleaning of the brake parts. Do not use any other fluid for cleaning these parts. Gasoline, engine oil, or any other petroleum distillate will cause deterioration of the rubber parts. Oil spilled on any part will be difficult to wash off completely and will eventually deteriorate the rubber used in the disc brake.**
- **When handling the disc pads or disc, be careful that no disc brake fluid or any oil gets on them. Clean off any fluid or oil that inadvertently gets on the pads or disc with a high flash-point solvent. Do not use one which will leave an oily residue. Replace the pads with new ones if they cannot be cleaned satisfactorily.**
- **Brake fluid quickly damages painted surfaces; any spilled fluid should be completely wiped up immediately.**
- **If any of the brake line fittings or the bleed valve is opened at any time, the AIR MUST BE BLED FROM THE BRAKE LINE.**

Recommended Disc Brake Fluid

Type:

Front and Rear	**DOT3 or DOT4**

Periodic Maintenance Procedures

NOTE

○*The procedure to change the front brake fluid is as follows. Changing the rear brake fluid is the same as for the front brake.*

NOTICE

Brake fluid quickly damages painted plastic surfaces; any spilled fluid should be completely washed away immediately.

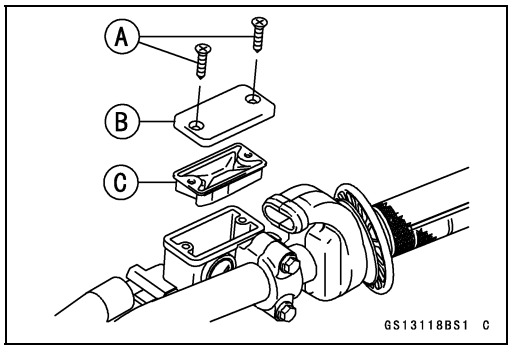

- Level the brake fluid reservoir.
- Remove:
  Front Brake Reservoir Cap Screws [A]
  Reservoir Cap [B]
  Diaphragm [C]

- Remove the rubber cap [A] from the bleed valve [B] on the caliper.

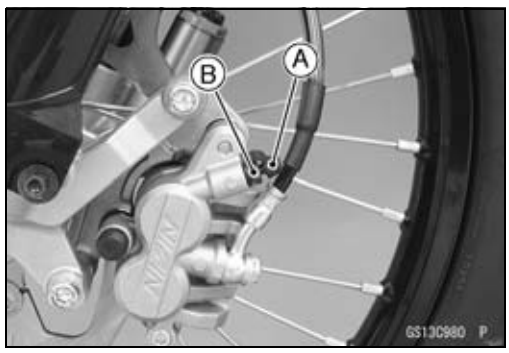

- Attach a clear plastic hose [A] to the bleed valve, and run the other end of the hose into a container.
- Fill the reservoir with fresh specified brake fluid.

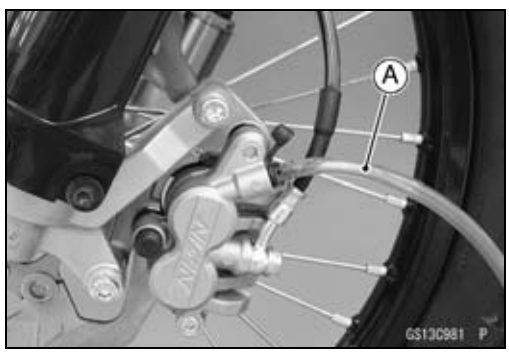

Periodic Maintenance Procedures

- Change the brake fluid as follows:

○Repeat this operation until fresh brake fluid comes out from the plastic hose or the color of the fluid changes.

1. Open the bleed valve [A].
2. Apply the brake and hold it [B].
3. Close the bleed valve [C].
4. Release the brake [D].

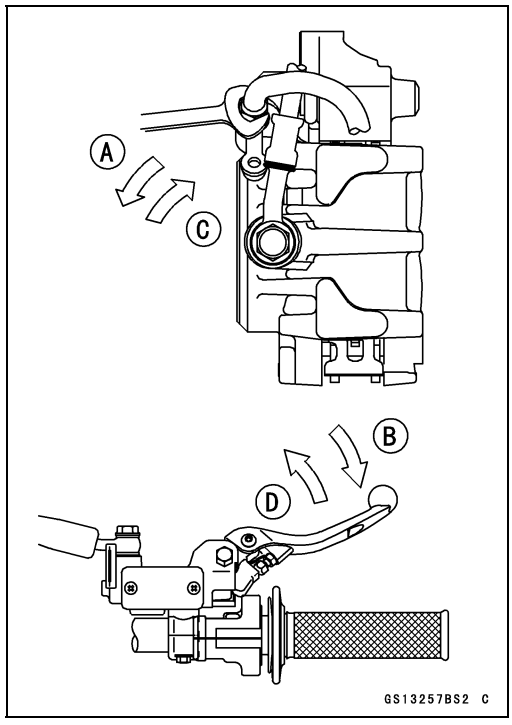

⚠ WARNING

Mixing brands and types of brake fluid can reduce the brake system's effectiveness and cause an accident resulting in injury or death. Do not mix two brands of brake fluid. Change the brake fluid in the brake line completely if the brake fluid must be refilled but the type and brand of the brake fluid that is already in the reservoir are unidentified.

NOTE

○*The fluid level must be checked often during the changing operation and replenished with fresh brake fluid. If the fluid in the reservoir runs out any time during the changing operation, the brakes will need to be bled since air will have entered the brake line.*

- Remove the clear plastic hose.
- Install the diaphragm and reservoir cap.
- Tighten:

Torque - Front Brake Reservoir Cap Screws: 1.5 N·m (0.15 kgf·m, 13 in·lb)
Rear Brake Reservoir Cap Bolts: 1.5 N·m (0.15 kgf·m, 13 in·lb)

- Tighten the bleed valve, and install the rubber cap.

Torque - Caliper Bleed Valve: 8.0 N·m (0.82 kgf·m, 71 in·lb)

- After changing the fluid, check the brake for good braking power, no brake drag, and no fluid leakage.

★If necessary, bleed the air from the lines (see Brake Line Bleeding in the Brakes chapter).

Periodic Maintenance Procedures

Brake Pad Wear Inspection

- Remove:
  Front Brake Caliper (see Caliper Removal in the Brakes chapter)
- Check the lining thickness and condition of the brake pads in each caliper.

NOTE

○*It is able to check with the pads installed.*

★If either pad is damaged, replace both pads in the caliper as a set.

Brake Pad Lining Thickness

Standard:	
Front	**4.0 mm (0.16 in.)**
Rear	**6.4 mm (0.25 in.)**
Service Limit:	
Front	**1 mm (0.04 in.)**
Rear	**1 mm (0.04 in.)**

★If the lining thickness [A] of either pad is less than the service limit [B], replace both pads in the caliper as a set.
Front Pad [C]
Rear Pad [D]

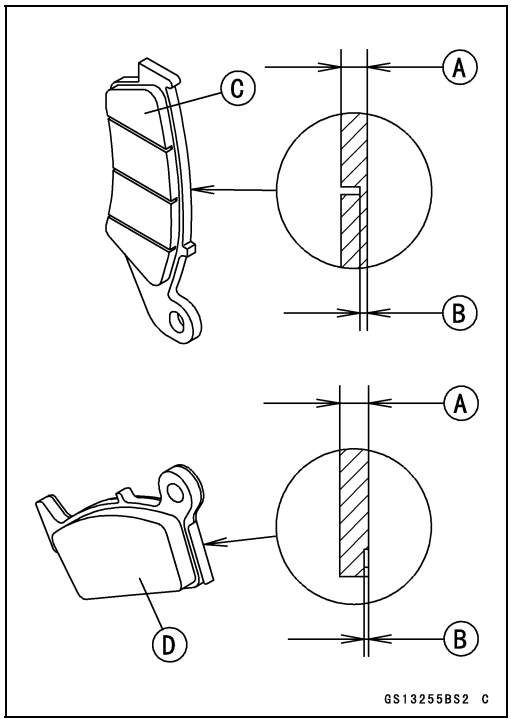

Brake Master Cylinder Cup and Dust Cover Replacement

Front Master Cylinder Disassembly

- Remove the front master cylinder (see Front Master Cylinder Removal in the Brakes chapter).
- Remove the reservoir cap and diaphragm, and pour the brake fluid into a container.
- Remove the locknut and pivot bolt, and remove the brake lever.
- Pull the push rod [A] and dust cover [B] out of place, and remove the circlip [C].

  Special Tool - Inside Circlip Pliers: 57001-143
- Remove the washer [D].
- Remove the piston assy [E] (include primary and secondary cups).

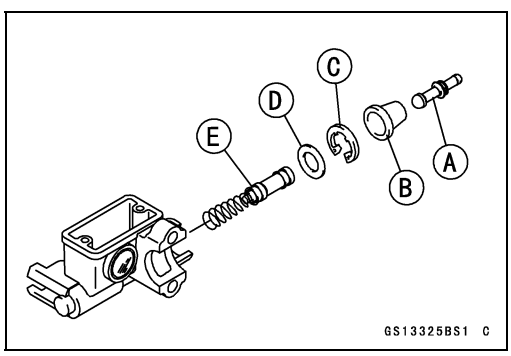

Rear Master Cylinder Disassembly

- Remove the rear master cylinder (see Rear Master Cylinder Removal in the Brakes chapter).

NOTE

○*Do not remove the push rod clevis since removal requires brake pedal position adjustment.*

- Remove the reservoir cap and diaphragm, and pour the brake fluid into a container.

- Slide the dust cover [A] on the push rod [B] out of place, and remove the circlip [C].

  Special Tool - Inside Circlip Pliers: 57001-143
- Pull out the push rod.
- Remove the piston assy [D] (include primary and secondary cups).

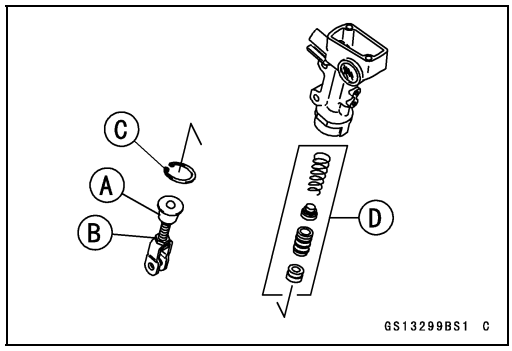

Assembly
- Before assembly, clean all parts including the master cylinder with brake fluid or alcohol.

NOTICE
Except for the disc pads and disc, use only disc brake fluid, isopropyl alcohol, or ethyl alcohol for cleaning of the brake parts. Do not use any other fluid for cleaning of these parts. Gasoline, engine oil, or any other petroleum distillate will cause deterioration of the rubber parts. Oil spilled on any part will be difficult to wash off completely, and will eventually deteriorate the rubber used in the disc brake.

- Apply brake fluid to the removed parts and to the inner wall of the cylinder.
- Take care not to scratch the piston assy and the inner wall of the cylinder.
- Replace the circlip with a new one and install it.

  Special Tool - Inside Circlip Pliers: 57001-143
- Apply silicone grease (ex. PBC grease) to the following parts.
  Brake Lever Pivot Bolt (Front)
  Brake Lever Contact (Front)
  Push Rod Contact
  Dust Covers
- Tighten:

  Torque - Brake Lever Pivot Bolt: 5.9 N·m (0.60 kgf·m, 52 in·lb)
  Brake Lever Pivot Bolt Locknut: 5.9 N·m (0.60 kgf·m, 52 in·lb)

Brake Caliper Fluid Seal and Dust Seal Replacement

Front Caliper Disassembly
- Remove:
  Front Caliper (see Caliper Removal in the Brakes chapter)
  Brake Pads (see Brake Pad Removal in the Brakes chapter)

Periodic Maintenance Procedures

- Separate the caliper holder [A] from the caliper [B].
- Remove the anti-rattle springs [C].

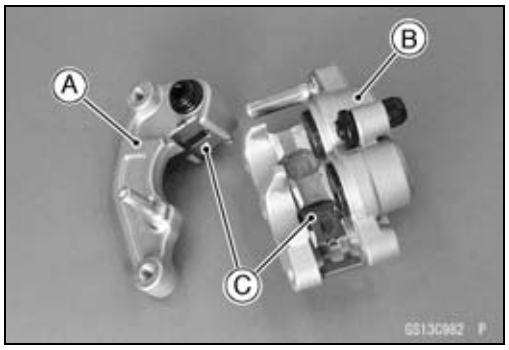

- Using compressed air, remove the pistons. One way to remove the pistons is as follows.

○Cover the caliper opening with a clean heavy cloth [A].

○Remove the pistons by lightly applying compressed air [B] to the hose joint opening.

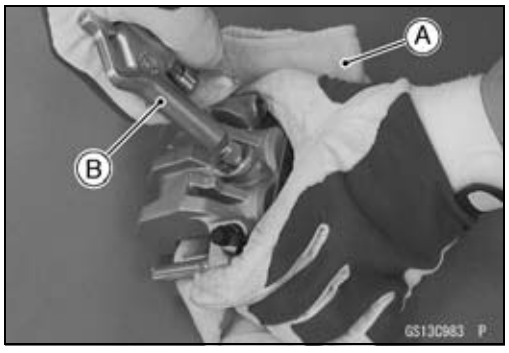

⚠ WARNING

The piston in the brake caliper can crush hands and fingers. Never place your hand or fingers in front of the piston.

- Pull out the pistons [A] by hand.
- Remove the dust seals [B] and fluid seals [C] on each cylinder.

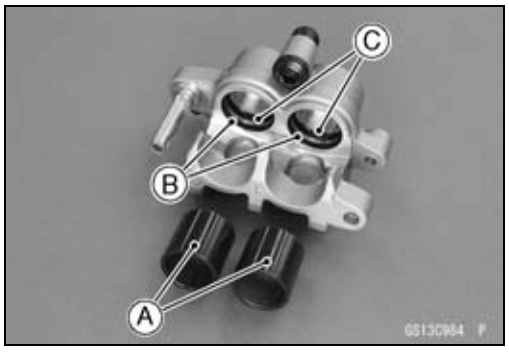

Rear Caliper Disassembly

- Remove:
  Rear Caliper (see Caliper Removal in the Brakes chapter)
  Brake Pads (see Brake Pad Removal in the Brakes chapter)

- Separate the caliper holder [A] from the caliper [B].
- Remove the anti-rattle springs [C].

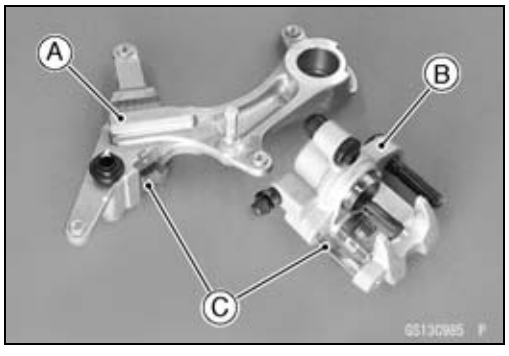

Periodic Maintenance Procedures

- Using compressed air, remove the piston.
  - ○Cover the caliper opening with a clean heavy cloth [A].
  - ○Remove the piston by lightly applying compressed air [B] to the hose joint opening.

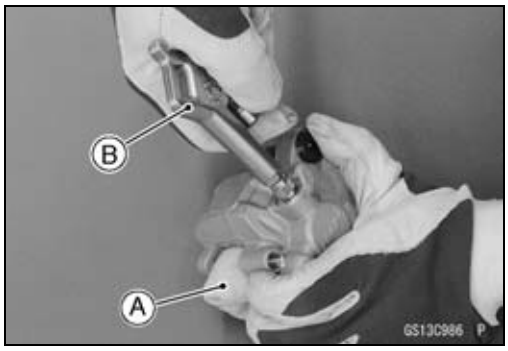

⚠ WARNING

The piston in the brake caliper can crush hands and fingers. Never place your hand or fingers in front of the piston.

- Pull out the piston [A] by hand.
- Remove the dust seal [B] and fluid seal [C].

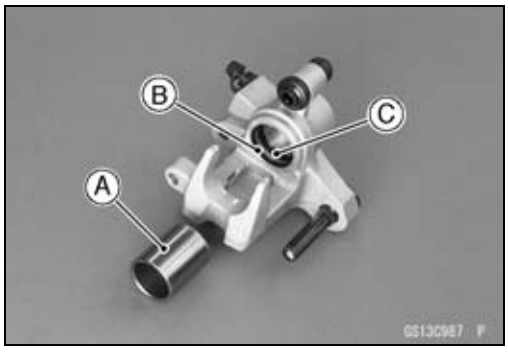

Caliper Assembly

- Clean the caliper parts except for the pads.

NOTICE

For cleaning of the parts, use only disc brake fluid, isopropyl alcohol, or ethyl alcohol.

★If you removed the bleed valve, install the bleed valve and rubber cap.

Torque - Caliper Bleed Valve: 8.0 N·m (0.82 kgf·m, 71 in·lb)

- Replace the fluid seal(s) [A] with new ones.
  - ○Apply silicone grease to the fluid seal(s), and install them into the cylinder(s) by hand.
- Replace the dust seal(s) [B] with new ones.
  - ○Apply brake fluid to the dust seal(s), and install them into the cylinder(s) by hand.
- Apply brake fluid to the outside of the piston(s) [C], and push them into each cylinder by hand.

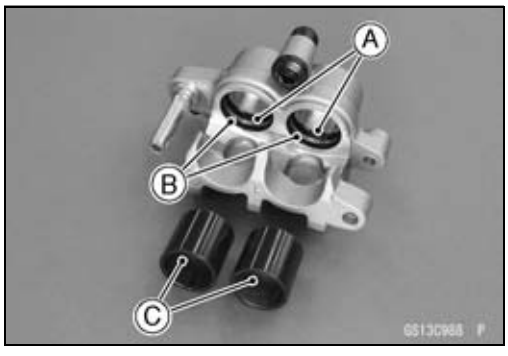

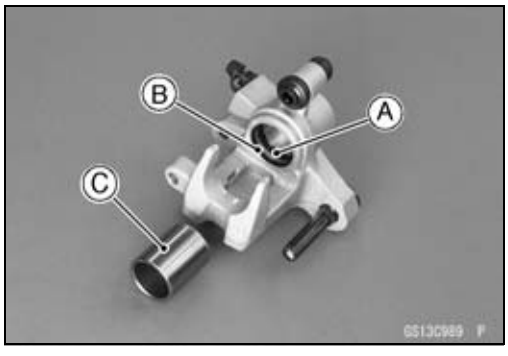

Periodic Maintenance Procedures

- Install the anti-rattle springs [A] as shown.

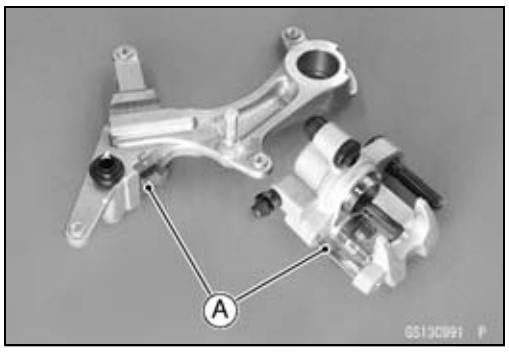

- Replace the friction boot [A] and dust boot [B] if they are damaged.
- Apply a thin coat of silicone grease to the caliper holder shafts [C] and holder holes.
- Assemble the caliper and caliper holder.

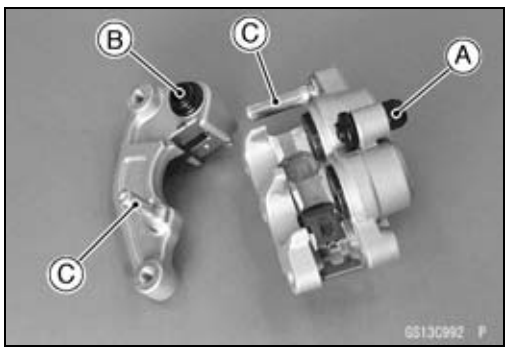

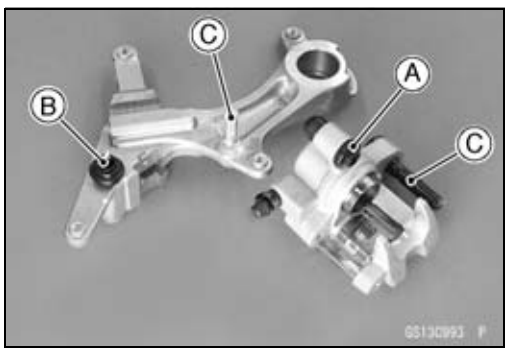

- Install the brake pads (see Brake Pad Installation in the Brakes chapter).
- Install the calipers (see Caliper Installation in the Brakes chapter).
- Wipe up any spilled brake fluid on the caliper with wet cloth.

Brake Hoses and Connections Inspection

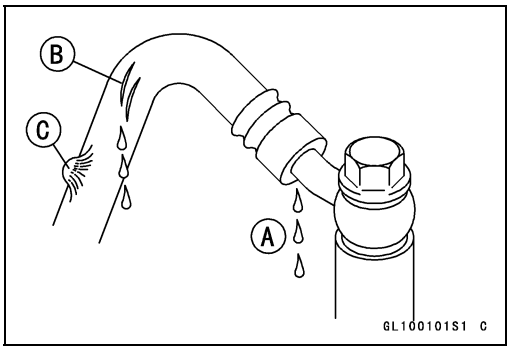

- Inspect the brake hose and fittings for deterioration, cracks and signs of leakage.

○The high pressure inside the brake line can cause fluid to leak [A] or the hose to burst if the line is not properly maintained. Bend and twist the rubber hose while examining it.

★Replace the hose if any cracks [B] or bulges [C] are noticed.

★Tighten any loose fittings.

Brake Hose Replacement

NOTICE
Brake fluid quickly damages painted surfaces; any spilled fluid should be completely washed away immediately.

Front Brake Hose

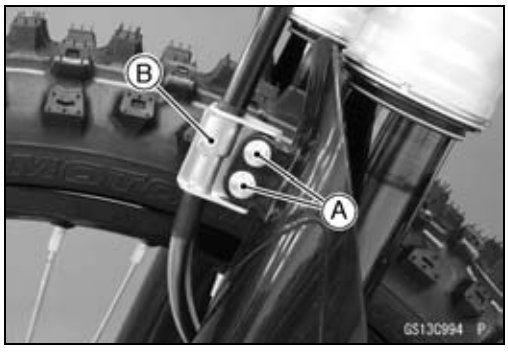

- Remove:
  Front Brake Hose Clamp Bolts [A]
  Front Brake Hose Clamps [B]

Rear Brake Hose

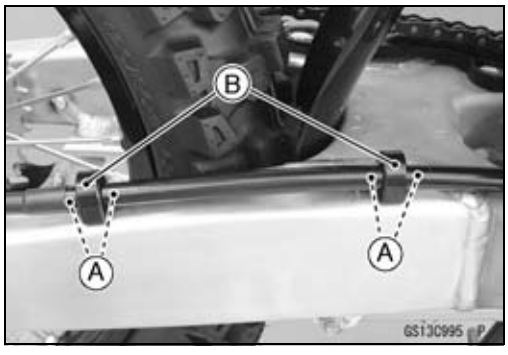

- Remove:
  Rear Brake Hose Clamp Screws [A]
  Rear Brake Hose Clamp [B]

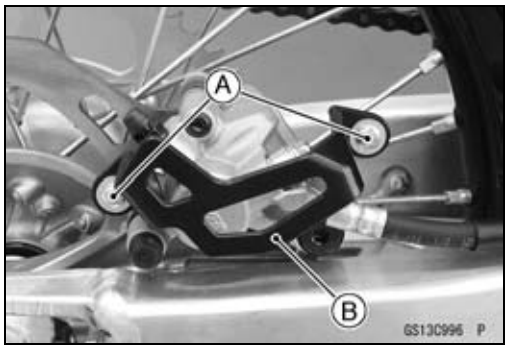

- Remove:
  Rear Caliper Guard Bolts [A]
  Rear Caliper Guard [B]

Periodic Maintenance Procedures

- Remove:
  Rear Master Cylinder Mounting Bolts [A]

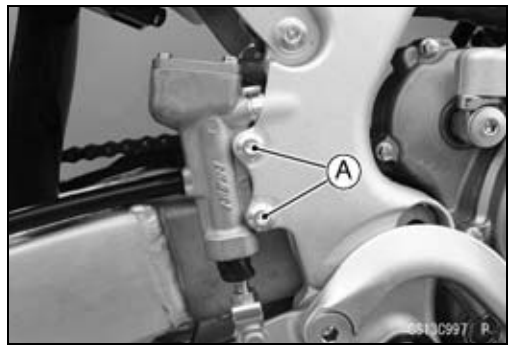

- Remove the front/rear brake hose banjo bolts [A] and washers [B].
- Replace the washers with new ones.

○When removing the brake hose, take care not to spill the brake fluid on the painted or plastic parts.

○When removing the brake hose, temporarily secure the end of the brake hose to some high place to keep fluid loss to a minimum.

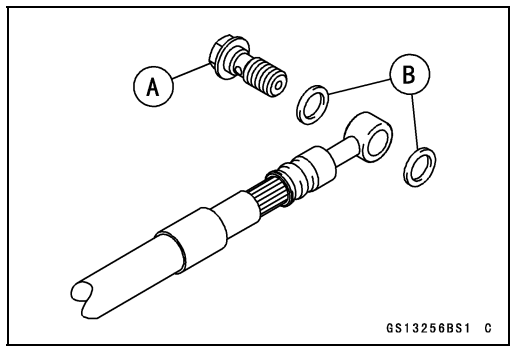

- When installing the hoses, avoid sharp bending, kinking, flattening or twisting, and run the hoses according to Cable, Wire, and Hose Routing section in the Appendix chapter.
- Tighten:

Torque - Brake Hose Banjo Bolts: 25 N·m (2.5 kgf·m, 18 ft·lb)

- Install the removed parts (see appropriate chapters).
- Bleed the brake line after installing the brake hose (see Brake Line Bleeding in the Brakes chapter).

Suspension

Front Fork Inspection

- Visually inspect the front fork for oil leakage, scoring or scratches on the outer surface of the inner tubes [A].
- Holding the brake lever, pump the front fork down and up manually to check for smooth operation.

★If the fork shown damages or oil leak, replace the damaged parts.

★If the fork rattles, inspect the oil level or tightening torque.

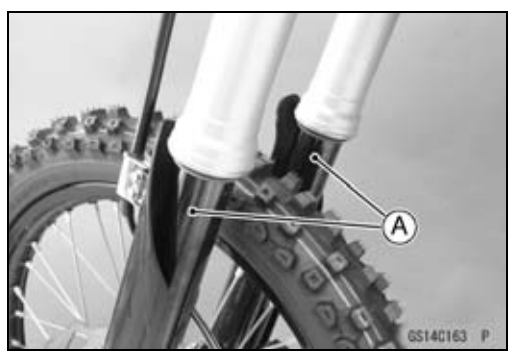

NOTICE
If the inner tube is badly bent or creased, replace it. Excessive bending, followed by subsequent straightening, can weaken the inner tube.

Front Fork Oil Change

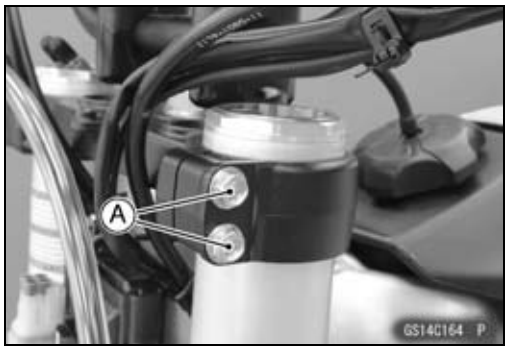

- Remove:
  Number Plate (see Number Plate Removal in the Frame chapter)
  Front Wheel (see Front Wheel Removal in the Wheels/Tires chapter)
- Loosen the front fork clamp bolts (upper) [A].

NOTE

○*Set rebound and compression damping setting to the softest settings before disassembly to minimize damping forces that can hinder disassembly. Record the setting before turning the adjuster.*

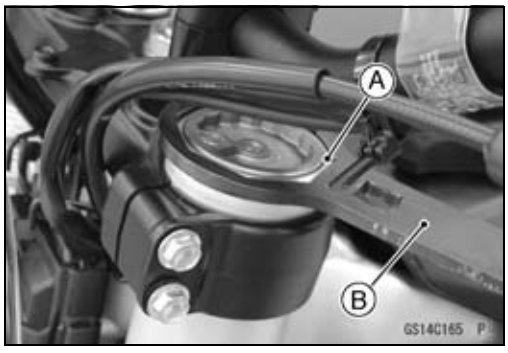

- Turn the handlebar to one side, and loosen the cylinder unit [A].

Special Tool - Top Plug Wrench, 50 mm [B]: 57001-1645

NOTE

○*Do not remove the cylinder unit.*

- Remove:
  Front Fork (see Front Fork Removal in the Suspension chapter)

- Thoroughly clean the fork before disassembly.

NOTICE
Be careful not scratch the inner tube and not to damage the dust seal. **Avoid scratching or damaging the inner tube or the dust seal. Use a mild detergent and sponge out dirt with plenty of water.**

Left Front Fork

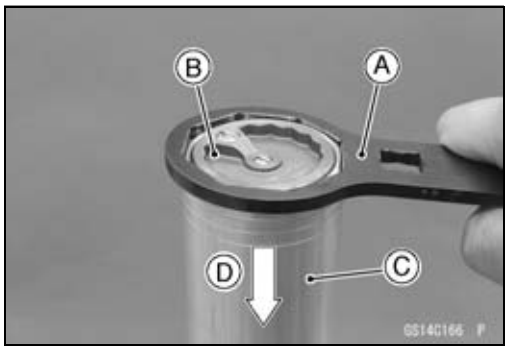

- Using the top plug wrench [A], remove the cylinder unit [B] from the outer tube [C] and slowly slide down [D] the outer tube.

Special Tool - Top Plug Wrench, 50 mm: 57001-1645

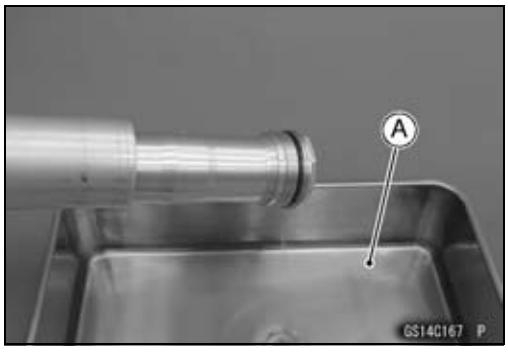

- Place an oil pan under the front fork and drain the fork oil [A].

NOTE

○*Pump the outer tube several times to drain the fork oil.*

Periodic Maintenance Procedures

- Raise the outer tube and temporarily install the cylinder unit [A] to the outer tube [B] with the top plug wrench [C].

  Special Tool - Top Plug Wrench, 50 mm: 57001-1645

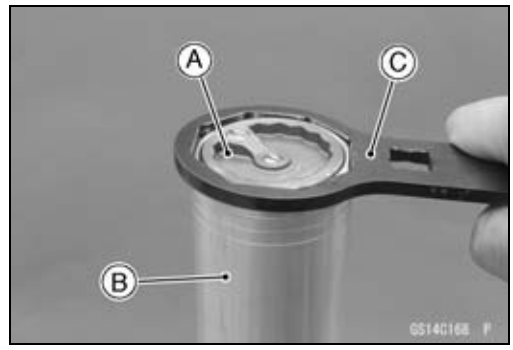

- Hold the axle holder [A] with a vise.

○Protect the axle holder with a soft jaw or heavy cloth when using a vise.

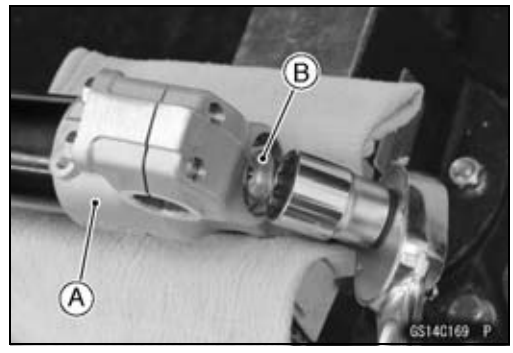

⚠ WARNING

Clamping the axle holder too tight can damage it which will affect riding stability.
Do not clamp the axle holder too tight.

- Loosen the adjuster assembly [B] completely.

NOTE

○*When removing the rebound adjuster assembly, do not use an impact wrench.*

- Compress the outer tube by hands and remove the adjuster assembly from the axle holder part so that the locknut appears about 20 ~ 30 mm (0.79 ~ 1.18 in.)

- Hold the locknut [A] with a wrench [B] and remove the adjuster assembly [C].

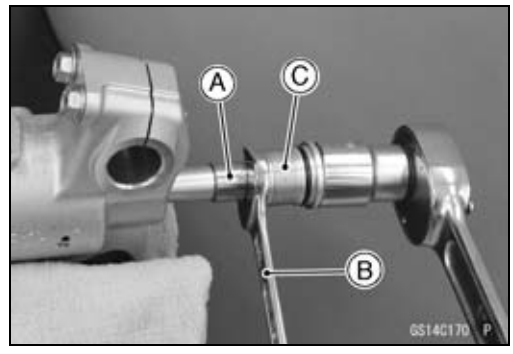

- Remove the push rod [A].

NOTICE

Removing the locknut and pushing the piston rod thread into the cylinder unit will damage the oil seal.
Do not remove the locknut from the piston rod.

- Remove the fork leg from the vise.

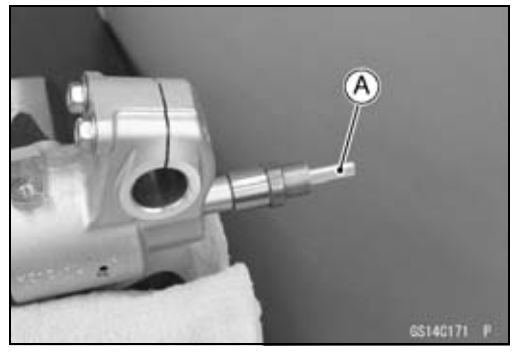

Periodic Maintenance Procedures

- Remove the cylinder unit [A] with the top plug wrench [B].

  Special Tool - Top Plug Wrench, 50 mm: 57001-1645

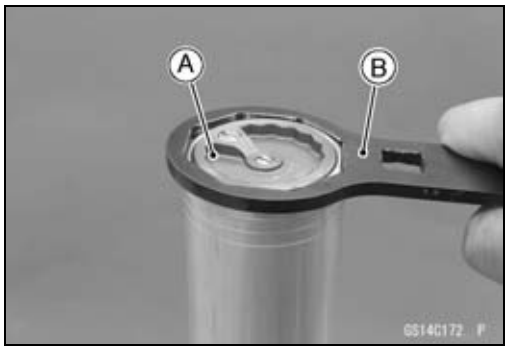

- Remove the cylinder unit [A] from the outer tube [B].

NOTICE
Do not make the piston rod contact to the outer tube. The piston rod could be damage. Disassembling the cylinder unit can lead to trouble. Do not disassemble the cylinder unit.

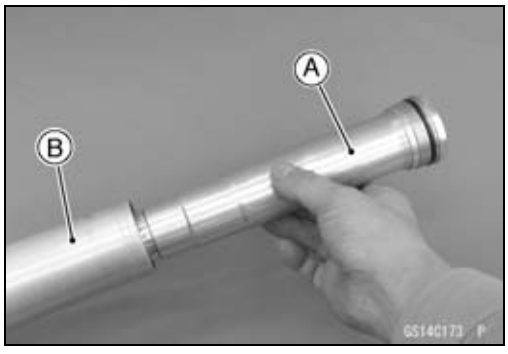

- Hold the front fork at the inverted position for more than 20 minutes to allow the fork oil to fully drain.

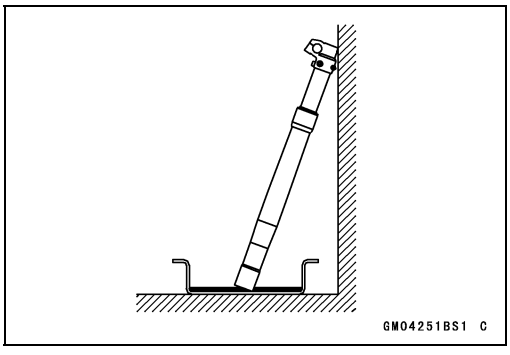

- Holding the top plug wrench (57001-1645) [A] with a vise, loosen the base valve assembly [B] using the top plug wrench (57001-1810) [C].

  Special Tools - Top Plug Wrench, 50 mm: 57001-1645
  Top Plug Wrench, 36 mm: 57001-1810

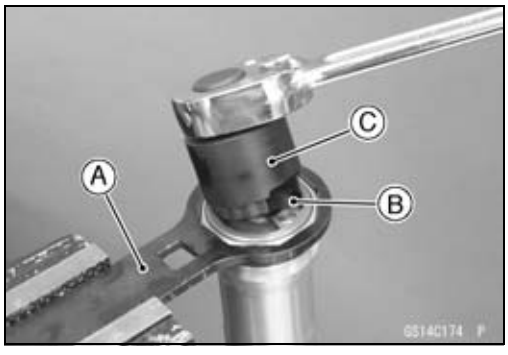

- Remove the base valve assembly [A] from the cylinder unit [B].

NOTE

○*Slowly compress the piston rod until it stops so that the base valve assembly can be removed easily.*

NOTICE
Be careful not to damage the bushing of the base valve assembly. **Disassembling the base valve assembly can lead to trouble.** **Do not disassemble the base valve assembly.**

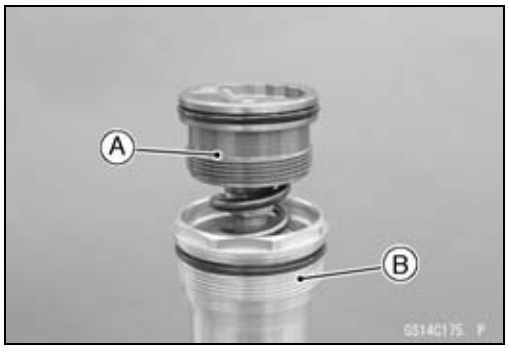

Periodic Maintenance Procedures

- Drain the fork oil [A] from the cylinder unit [B] by pumping the piston rod several times.

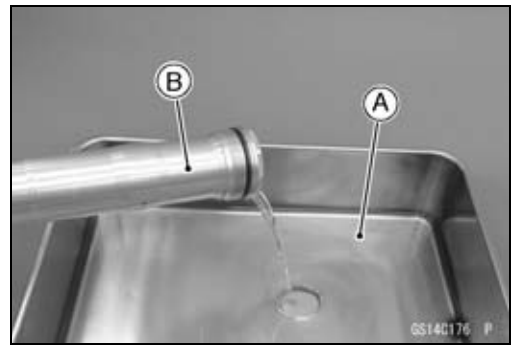

- Clean the threads [A] of cylinder unit and base valve assembly.

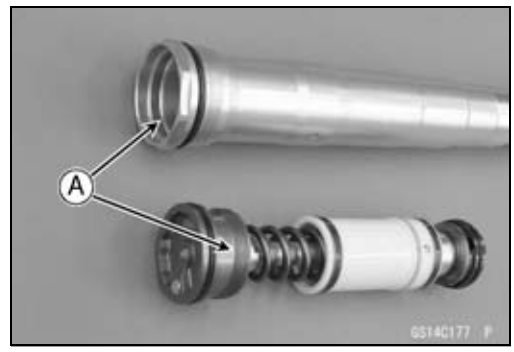

- With the piston rod in fully stretched, pour 310 mL (10.5 US oz.) of fork oil [A] into the cylinder unit [B].

  Suspension Oil - SS-19 (1 L): 44091-0009

NOTE

○*Plug the two oil holes [C] on the cylinder unit with fingers.*

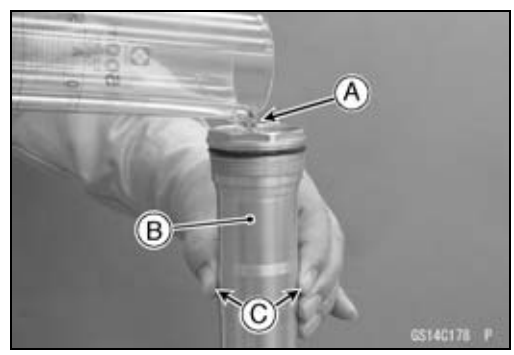

- Pump the piston rod [A] slowly several times to expel air.

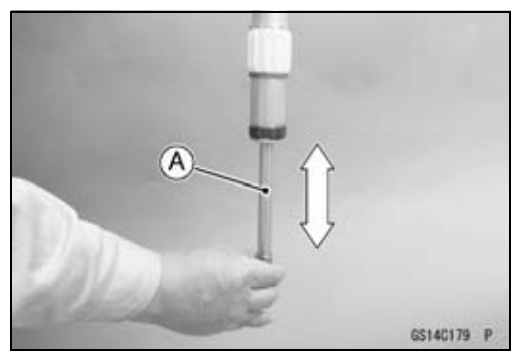

- With the piston rod fully stretched, check the oil level in the cylinder unit.

○Measure the oil level [A] from the top surface [B] in the cylinder unit using a suitable gauge.

Fork Cylinder Unit Oil Level
Standard: 132 ~ 140 mm (5.20 ~ 5.51 in.)

NOTE

○*Fork oil level may also be measured using the fork oil level gauge.*

Special Tool - Fork Oil Level Gauge: 57001-1290

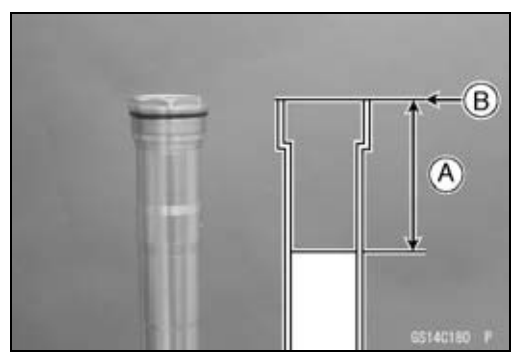

Periodic Maintenance Procedures

- Replace the O-rings [A] on the base valve assembly with new ones.
- Apply specified fork oil to the O-rings and bushings [B].

NOTICE
Do not damage the bushings when assembling the base valve.

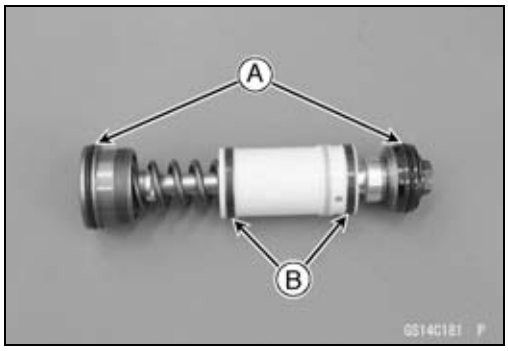

- With the piston rod [A] appear about 20 mm (0.79 in.) from fully compressed, gently install the base valve assembly [B] slowly to the cylinder unit [C].

NOTE

○*Plug the oil holes [D] on the left front fork cylinder unit with finger.*
○*While pulling the piston rod, install the base valve assembly slowly and pushing down it fully.*

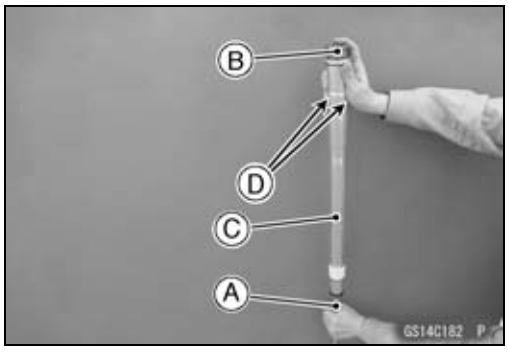

- Hold the top plug wrench (57001-1645) [A] with a vise.
- Holding the cylinder unit [B] with the top plug wrench (57001-1645), torque the base valve assembly [C] to the specified torque. With the top plug wrench (57001-1810) [D].

Special Tools - Top Plug Wrench, 50 mm: 57001-1645
Top Plug Wrench, 36 mm: 57001-1810

Torque - Base Valve Assembly: 30 N·m (3.1 kgf·m, 22 ft·lb)

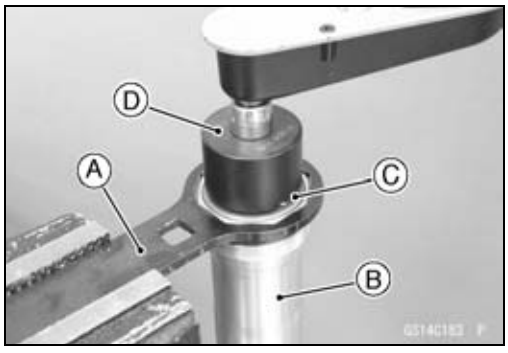

NOTE

○*Check if the locknut is completely screwed on to the piston rod.*

- Protect the piston rod end [A] with a heavy cloth [B] to prevent piston rod thread damage.
- Hold the cylinder unit at the upright position and slowly pump the piston rod several times about 100 mm (3.94 in.).
- Drain the extra oil off the cylinder unit by pumping the piston rod to full stroke.

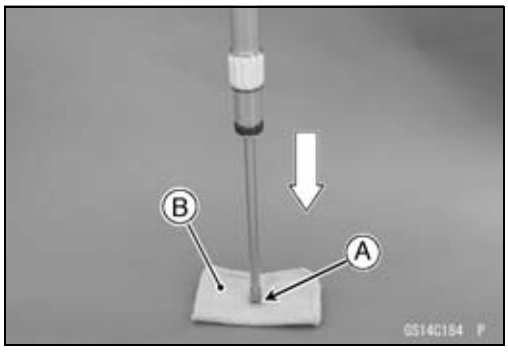

NOTICE
Be careful not to bend or damage the piston rod when the piston rod is stroked. Service carefully because oil flows out from the oil hole of the cylinder unit.

NOTE

○*Set the compression damping force setting to the softest.*
○*Check the piston rod sliding surface for damage.*
○*Apply fork oil to the piston rod sliding surface.*

Periodic Maintenance Procedures

- Drain the extra oil from the cylinder unit oil hole [A].
- Blow out the extra oil from the oil hole of the cylinder unit with the compressed air [B] blow to the oil hole.
- Wipe the oil off completely from the cylinder unit.

NOTE

○*If you cannot use compressed air, remove the air pressure relief screw of the base valve assembly. Upside down the cylinder unit for more than 10 minutes and drain the oil from the cylinder unit.*

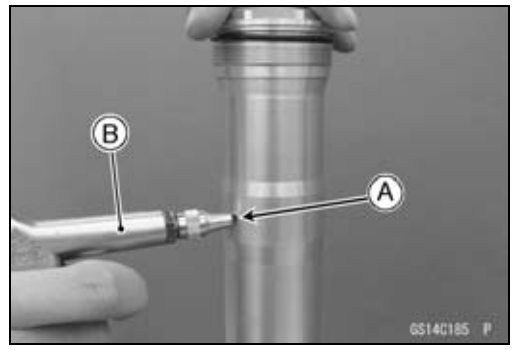

- Protect the piston rod end with a heavy cloth to prevent damage.
- Check the piston rod for smooth operation.

○Pump the piston rod [A] to full stroke [B] by pushing down the cylinder unit [C].

★If the piston rod operation is not smooth, check the piston rod for bend or damage.

- Hold the cylinder unit on level ground while piston rod is full stroked by your hand.
- Release the piston rod, then check that the piston rod extends to maximum.

★If the piston rod does not extend to maximum, bleed the air in the cylinder unit again.

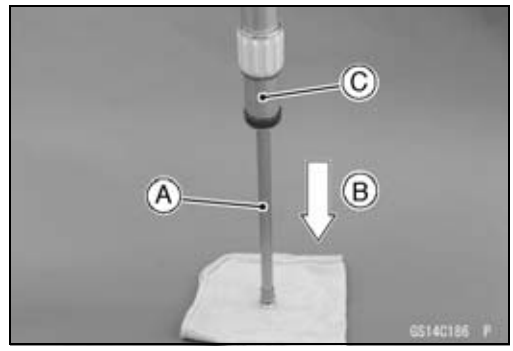

NOTICE
Be careful not to bend or damage the piston rod when the piston rod is stroked.

- Wipe the fork oil off completely from the cylinder unit [A].
- Compress the piston rod [B] to **200 ~ 250 mm (7.87 ~ 9.84 in.)** [C] and hold the left front fork cylinder unit upright position for 10 minutes.
- There should be no oil leak from the cylinder unit.

★If oil leaks from the cylinder unit, replace the cylinder unit assembly.

- Hold the cylinder unit on level ground and release the piston rod then check the piston rod extend to maximum.

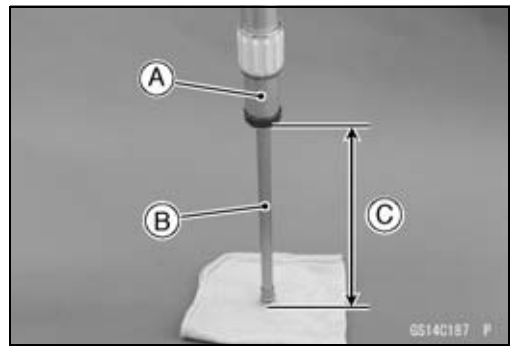

- Tighten the locknut [A] fully so that the piston rod thread protrudes 10 ~ 12 mm (0.39 ~ 0.47 in.) [B].

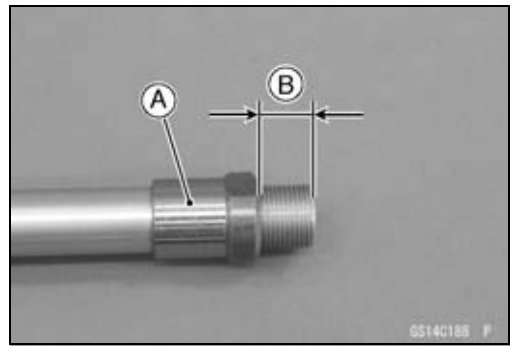

Periodic Maintenance Procedures

- Completely wipe off the fork oil from the cylinder unit [A].
- Insert the cylinder unit to the outer tube [B].

NOTICE
Do not make the piston rod contact to the outer tube. The piston rod could be damage.

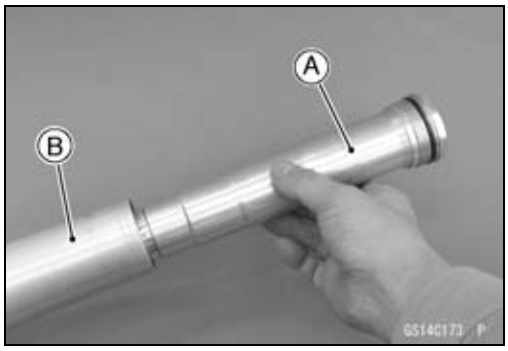

- Temporarily tighten the cylinder unit [A] by using the top plug wrench [B].

  Special Tool - Top Plug Wrench, 50 mm: 57001-1645

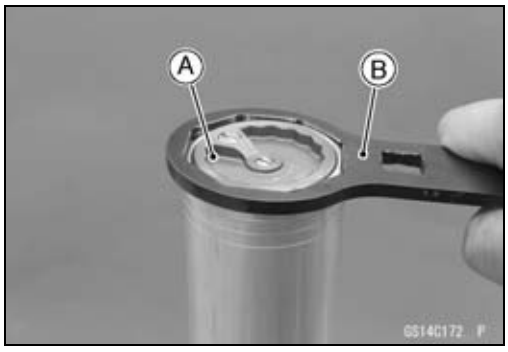

- Hold the axle holder with a vise.

○Protect the axle holder with a soft jaw or heavy cloth when using a vise.

⚠ WARNING
Clamping the axle holder too tight can damage it which will affect riding stability. **Do not clamp the axle holder too tight.**

- Replace the O-ring [A] on the adjuster assembly [B] with a new one and apply teflon grease to the O-ring.
- Insert the push rod [C] into the piston rod.
- Install the adjuster assembly to the push rod.

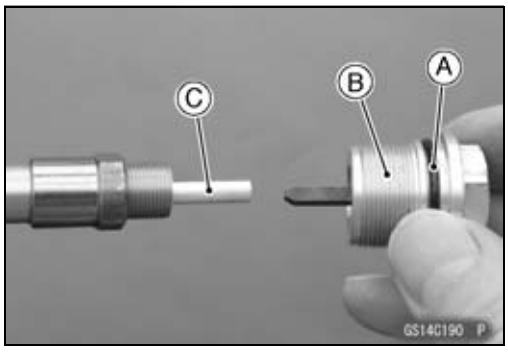

- Slowly turn the adjuster assembly [A] clockwise until resistance is felt and check the clearance between the locknut [B] and adjuster assembly for more than 1 mm (0.04 in.) [C].

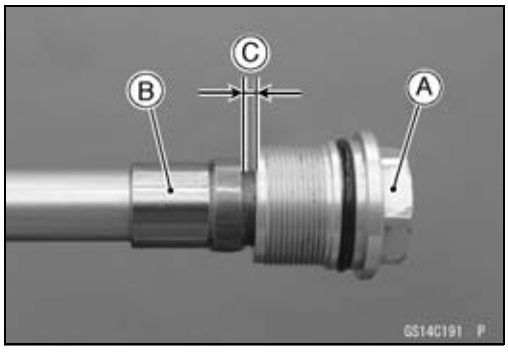

Periodic Maintenance Procedures

- Turn the locknut [A] counterclockwise until it contacts with the adjuster assembly [B].
- With the locknut held immovable using a wrench [C], tighten the adjuster assembly to the specified torque.

Torque - Adjuster Assembly (to Piston Rod): 28 N·m (2.9 kgf·m, 21 ft·lb)

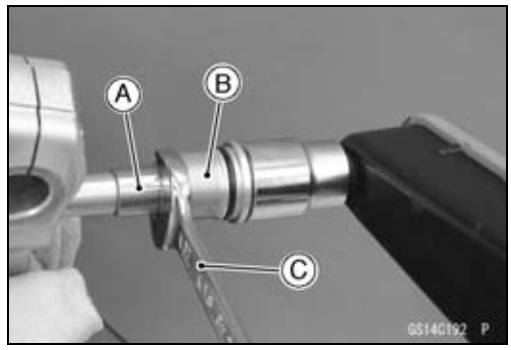

NOTICE
When tightening the locknut, the threads of the axle holder do not touch the piston rod. If the piston rod is scratched, it is possible to the damage in the cylinder unit.

- Apply a non-permanent locking agent to the adjuster assembly [A].
- Tighten the adjuster assembly.

Torque - Adjuster Assembly (to Axle Holder): 69 N·m (7.0 kgf·m, 51 ft·lb)

- Remove the fork leg from the vise.

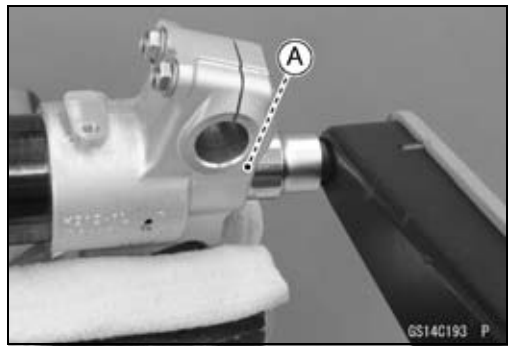

- Using the top plug wrench, remove the cylinder unit from the outer tube and slowly slide down the outer tube [A].

Special Tool - Top Plug Wrench, 50 mm: 57001-1645

- Pour the specified amount of fork oil [B] into the outer tube.

Suspension Oil - SS-19 (1 L): 44091-0009

Outer Tube Oil Amount

Standard:	**345 mL (11.7 US oz.)**
Adjustable Range:	**300 ~ 398 mL (10.1 ~ 13.5 US oz.)**

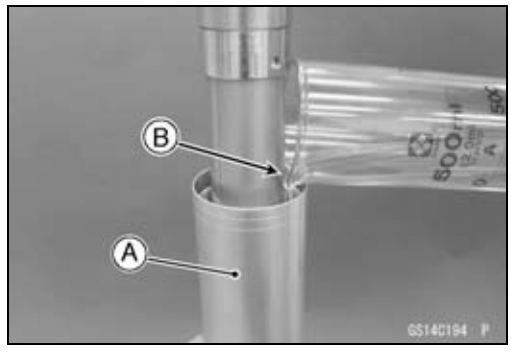

- Replace the O-ring on the cylinder unit [A] with a new one and apply teflon grease to the O-ring.
- Raise the outer tube [B] and temporarily install the cylinder unit to the outer tube with the top plug wrench [C].

Special Tool - Top Plug Wrench, 50 mm: 57001-1645

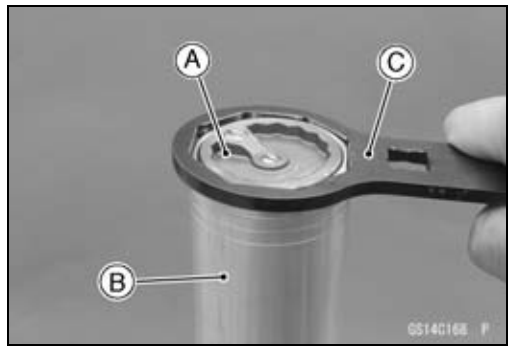

Right Front Fork

- Remove the air valve caps [A].

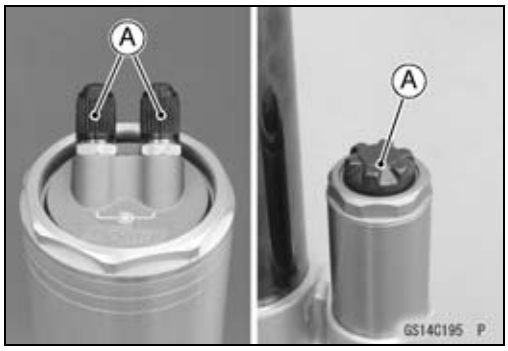

- Set the front fork upright state.
- Bleed air by pushing down the air valves in the order of balance chamber air valve [A], outer chamber air valve [B] and inner chamber air valve [C].

NOTE

○*First, bleed air in a balance chamber.*
○*The oil may spout from the air valve.*

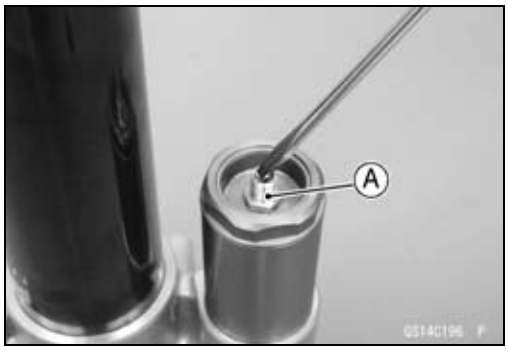

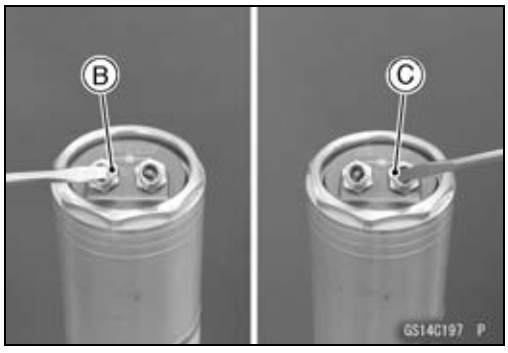

- Press the chamber cap [A] and remove the circlip [B].

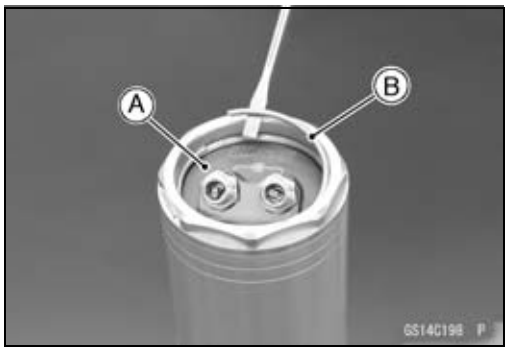

- Cover the chamber cap [A] with the clean cloth [B], and then hold the clean cloth to the outer tube with the tape.
- Pumping the outer tube several times to remove the chamber cap.

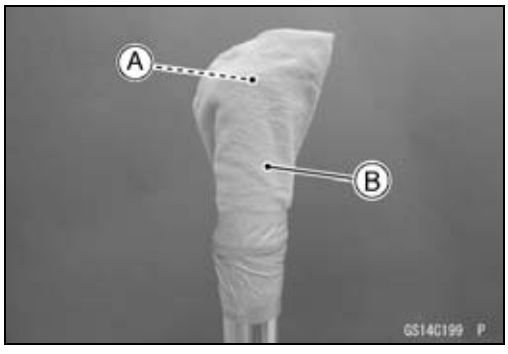

⚠ WARNING

Pressure within the chamber can push the chamber cap out with great force, creating the potential for injury. To avoid injury, point the chamber cap away from your body when pumping the outer tube and cover it with a cloth as shown.

Periodic Maintenance Procedures

- Place the a drain pan under the front fork and drain fork oil [A] so that the oil hole [B] positions upward for the oil spout from the oil hole.

NOTE

○*Pump the outer tube several times to drain the fork oil.*

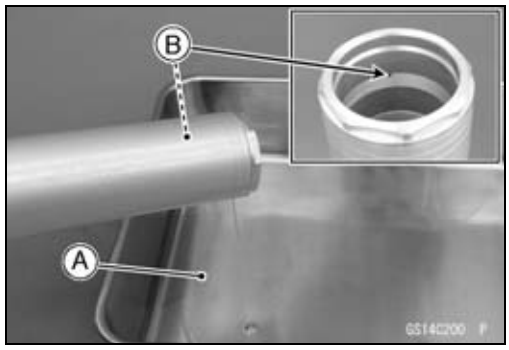

- Using the top plug wrench [A], remove the cylinder unit [B] from the outer tube [C] and slowly slide down [D] the outer tube.

Special Tool - Top Plug Wrench, 50 mm: 57001-1645

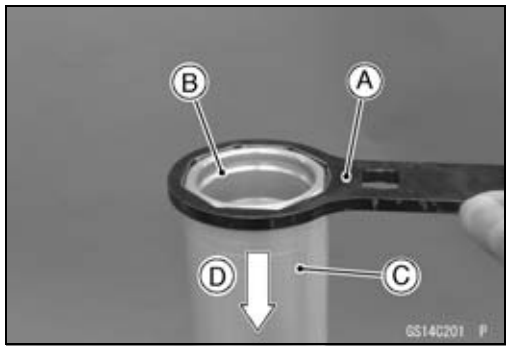

- Place the drain pan under the front fork and drain fork oil [A].

NOTE

○*Pump the outer tube several times to drain the fork oil.*

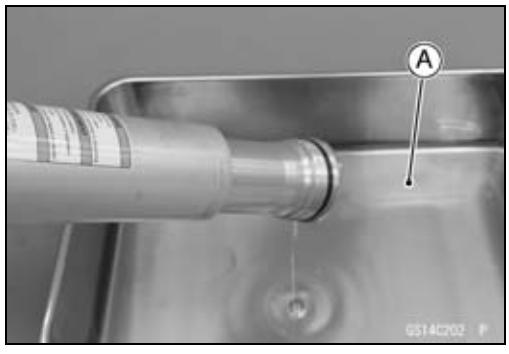

- Temporarily install the cylinder unit [A] to the outer tube [B] using the top plug wrench [C].

Special Tool - Top Plug Wrench, 50 mm: 57001-1645

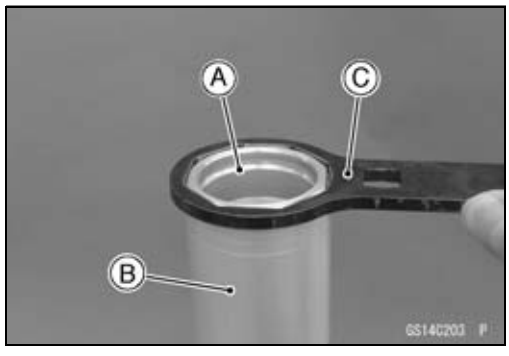

- Hold the axle holder with a vise, remove the plug bolt [A].

○Protect the axle holder with a soft jaw or heavy cloth when using a vise.

⚠ WARNING

Clamping the axle holder part too tight can damage it which will affect riding stability. Do not clamp the axle holder part too tight.

- Place the drain pan under the front fork and drain fork oil [A].

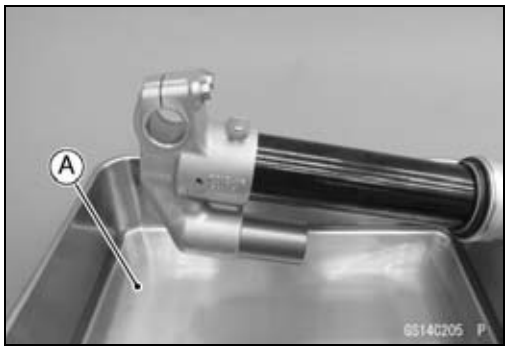

- Hold the axle holder with a vise.

○Protect the axle holder with a soft jaw or heavy cloth when using a vise.

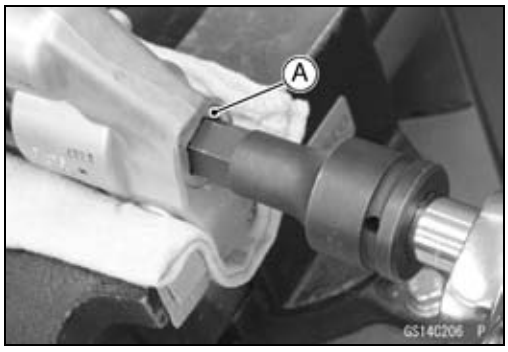

⚠ WARNING

Clamping the axle holder part too tight can damage it which will affect riding stability. Do not clamp the axle holder part too tight.

- Loosen the sealing bolt [A] completely.

NOTE

○*When removing the sealing bolt, do not force to loosen it at once using an impact wrench.*

- Compress the outer tube by hand and remove the sealing bolt from the axle holder part so that the locknut [A] appears about 20 ~ 30 mm (0.79 ~ 1.18 in.).
- Hold the locknut with a wrench [B] and remove the sealing bolt [C].

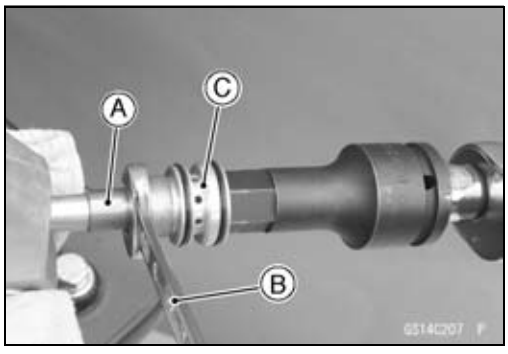

NOTICE

Removing the locknut and pushing the piston rod thread into the cylinder unit will damage the oil seal. Do not remove the locknut from the piston rod.

- Remove the fork leg with a vise.
- Loosen the cylinder unit [A] with the top plug wrench [B].

Special Tool - Top Plug Wrench, 50 mm: 57001-1645

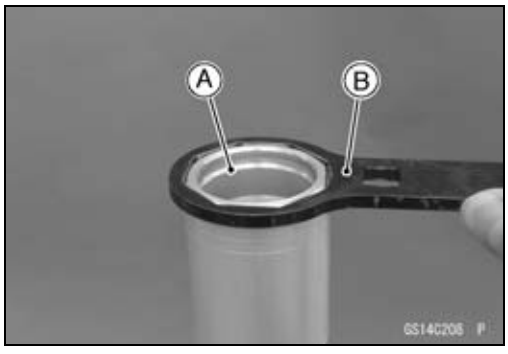

Periodic Maintenance Procedures

- Remove the cylinder unit [A] from the outer tube [B].

NOTICE
Do not make the piston rod contact to the outer tube. The piston rod could be damage. Disassembling the cylinder unit can cause internal damage. Do not disassemble the cylinder unit.

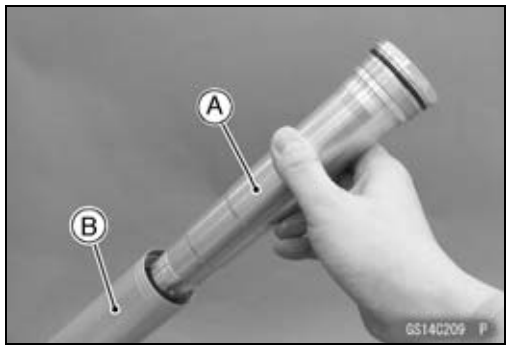

- Drain the fork oil [A] from the cylinder unit by pumping the piston rod [B] more than 10 times.

NOTE

○*Service carefully because oil flies out from the oil hole of the cylinder unit.*

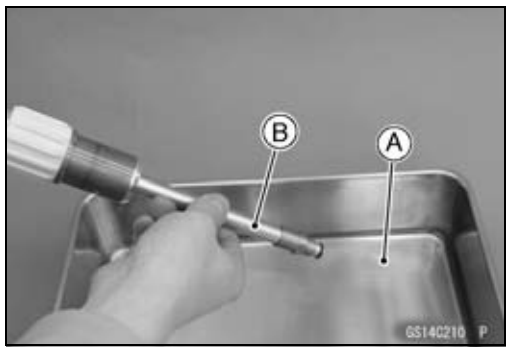

- Hold the front fork at the inverted position for more than 20 minutes to allow the fork oil to fully drain.

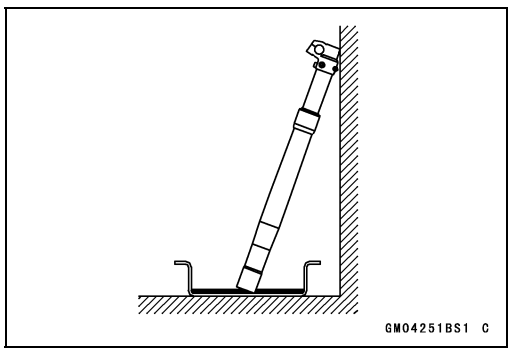

- With the piston rod fully stretched, pour the fork oil [A] of 50 mL (1.69 US oz.) into the cylinder unit [B].

Suspension Oil - SS-19 (1 L): 44091-0009

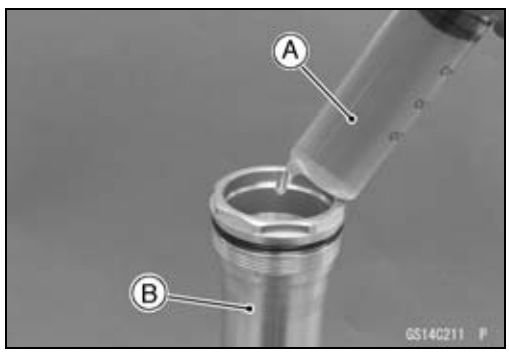

- Replace the O-rings [A] on the chamber cap [B] and cylinder unit [C] with new ones.
- Apply teflon grease to the O-rings on the chamber cap.
- Install the chamber cap to the cylinder unit.

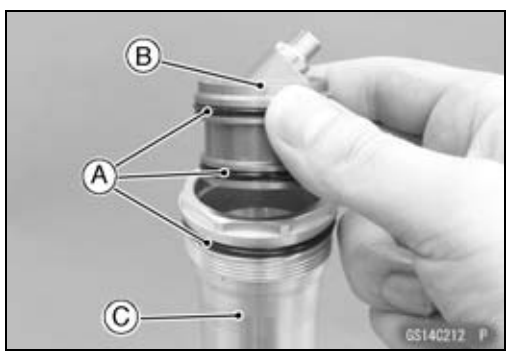

- Replace the circlip [A] with a new one and install the circlip in the groove in the cylinder unit [B].

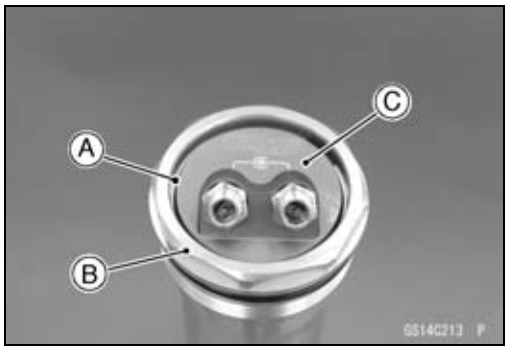

⚠ WARNING

If the circlip is damaged or not correctly installed in the groove in the cylinder unit, the chamber cap may come out of the front fork when injecting the air pressure or riding the motorcycle. This could cause a crash resulting in serious injury or death. When the circlip is removed, replace it with a new one and correctly install it in the groove.

- Pumping the cylinder unit and fit the chamber cap [C] to the circlip.

- With the piston rod fully stretched, inject the air of specified pressure to the inner chamber by using the suitable air pump [A].
  Inner Chamber Air Valve [B]

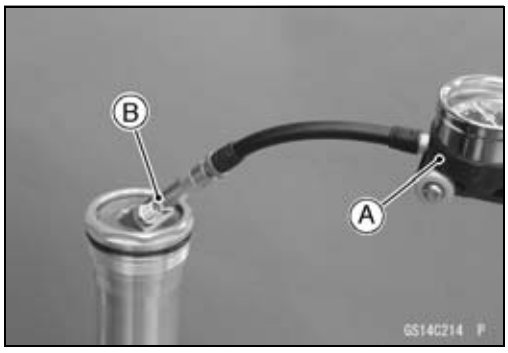

⚠ WARNING

Rapid pressurization of the cylinder unit can damage it and eject the piston rod with great force, creating the potential for injury. To avoid injury and damaging the piston rod, do not pressurize the cylinder unit quickly with compressed air; use a manually operated air pump.

Inner Chamber Air Pressure

Standard:	**(US, CA, AU) 1 200 kPa (12.24 kgf/cm², 174 psi)**
	(EUR, BR) 1 100 kPa (11.21 kgf/cm², 160 psi)
Adjustable Range:	**600 ~ 1 400 kPa (6.11 ~ 14.28 kgf/cm², 87.0 ~ 203 psi)**

- Measure the cylinder unit length [A].

★If it is not within the standard, replace the cylinder unit.

Cylinder Unit Length

Standard: 950.5 ~ 952.5 mm (37.42 ~ 37.50 in.)

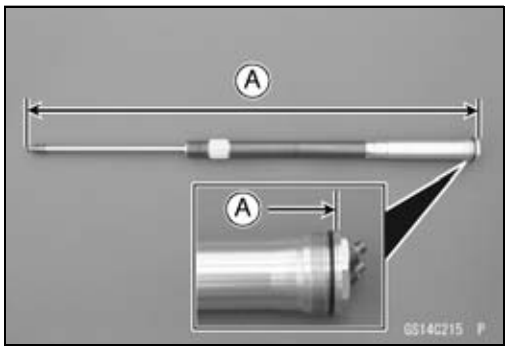

Periodic Maintenance Procedures

- Insert the cylinder unit [A] to the outer tube [B].

NOTICE
Do not make the piston rod contact to the outer tube. The piston rod could be damage.

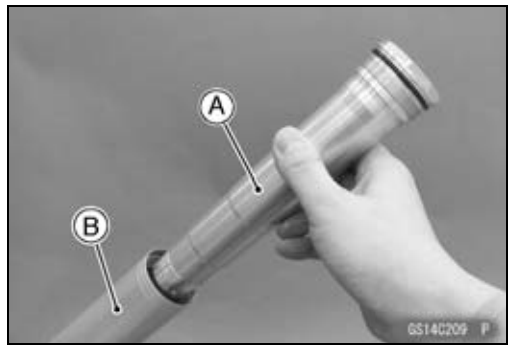

- Temporarily install the cylinder unit [A] to the outer tube [B] using the top plug wrench [C].

  Special Tool - Top Plug Wrench, 50 mm: 57001-1645

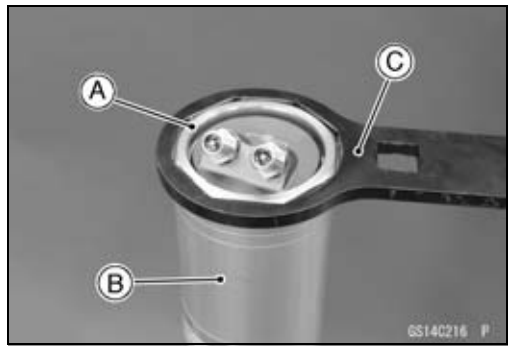

- Hold the axle holder with a vise.

○Protect the axle holder with a soft jaw or heavy cloth when using a vise.

⚠ WARNING
Clamping the axle holder part too tight can damage it which will affect riding stability. Do not clamp the axle holder part too tight.

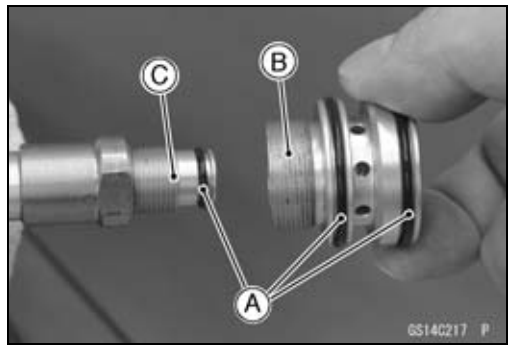

- Replace the O-rings [A] on the sealing bolt [B] and piston rod [C] with new ones and apply teflon grease to the O -rings.

- Tighten the lock nut [A] fully.
- Slowly turn the sealing bolt [B] clockwise until resistance is felt and check the clearance [C] between the locknut and sealing bolt for more than 1.5 mm (0.059 in.).

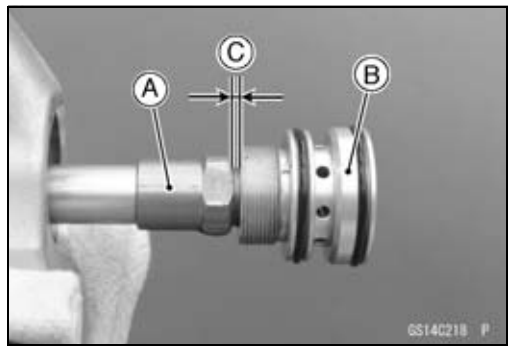

Periodic Maintenance Procedures

- Turn the locknut [A] counterclockwise until it contacts with the sealing bolt [B].
- With the locknut held immovable using a wrench [C], tighten the sealing bolt to the specified torque.

  Torque - Sealing Bolt (to Piston Rod): 28 N·m (2.9 kgf·m, 21 ft·lb)

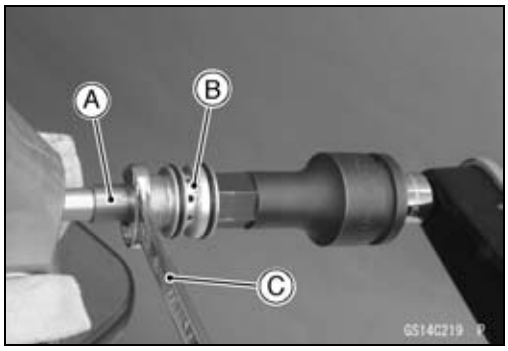

NOTICE
When tightening the locknut, the threads of the axle holder do not touch the piston rod. If the piston rod is scratched, it is possible to the damage in the cylinder unit.

- Apply a non-permanent locking agent to the threads of the sealing bolt [A] and tighten the sealing bolt into the front fork.

  Torque - Sealing Bolt (to Axle Holder): 69 N·m (7.0 kgf·m, 51 ft·lb)

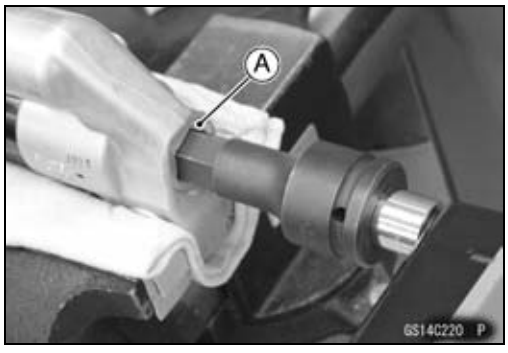

- Remove the cylinder unit [A] from the outer tube [B] using the top plug wrench [C].

  Special Tool - Top Plug Wrench, 50 mm: 57001-1645

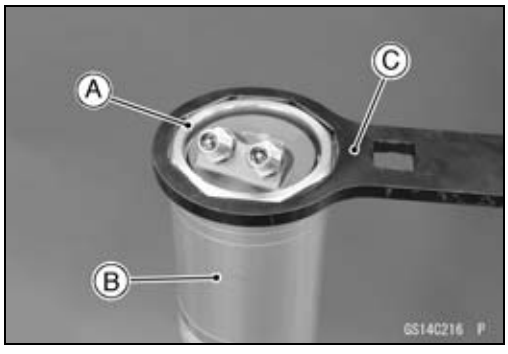

- Pour the fork oil [A] of 270 mL (9.13 US oz.) into the outer tube [B].

  Suspension Oil - SS-19 (1 L): 44091-0009

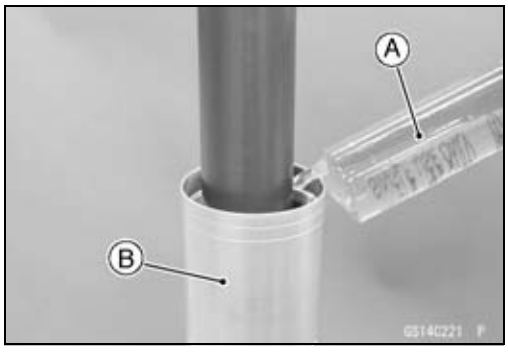

Periodic Maintenance Procedures

- Temporarily install the cylinder unit [A] to the outer tube [B] using the top plug wrench [C].

  Special Tool - Top Plug Wrench, 50 mm: 57001-1645

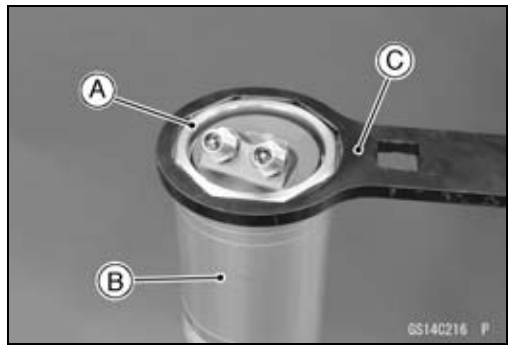

- Inject the air of specified pressure to the outer chamber by using a suitable air pump [A].
  Outer Chamber Air Valve [B]

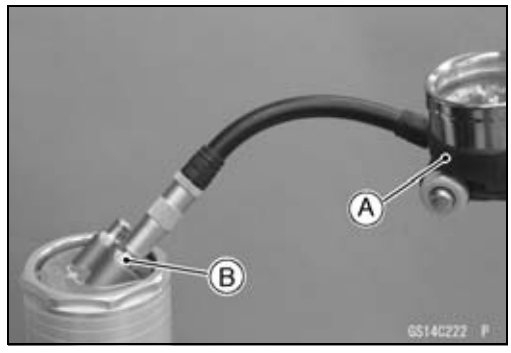

NOTICE
Rapid pressurization of the front fork can damage it. To avoid damaging the front fork, do not pressurize the front fork quickly with compressed air; use a manually operated air pump.

Outer Chamber Air Pressure

Standard:	**100 kPa (1.02 kgf/cm², 14.5 psi)**
Adjustable Range:	**0 ~ 130 kPa (0 ~ 1.33 kgf/cm², 0 ~ 18.9 psi)**

- Pour the fork oil [A] of 5 mL (0.17 US oz.) into the balance chamber [B].

  Suspension Oil - SS-19 (1 L): 44091-0009

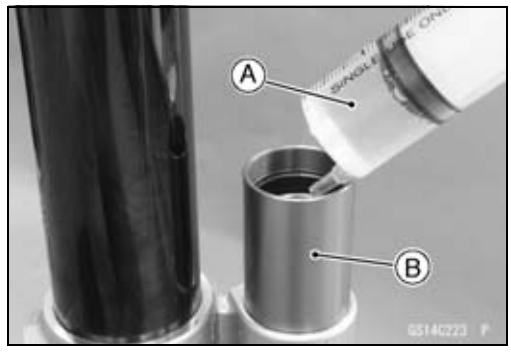

- Hold the axle holder with a vise.

○Protect the axle holder with a soft jaw or heavy cloth when using a vise.

⚠ WARNING
Clamping the axle holder part too tight can damage it which will affect riding stability. Do not clamp the axle holder part too tight.

Periodic Maintenance Procedures

- Replace the O-ring [A] on the plug bolt with a new one.
- Apply teflon grease to the O-ring on the plug cap.

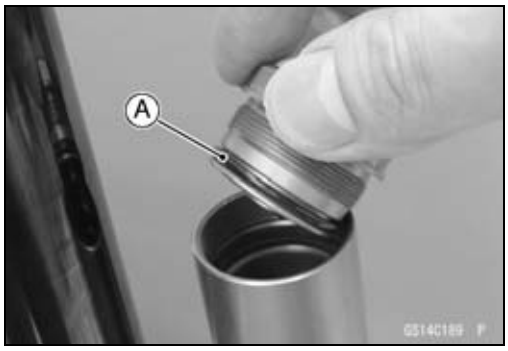

- Tighten the plug bolt [A] to the specified torque.

  Torque - Plug Bolt: 45 N·m (4.6 kgf·m, 33 ft·lb)

- Inject the air of specified pressure to the balance chamber by using a suitable air pump [A].
  Balance Chamber Air Valve [B]

NOTICE
Rapid pressurization of the front fork can damage it. To avoid damaging the front fork, do not pressurize the front fork quickly with compressed air; use a manually operated air pump.

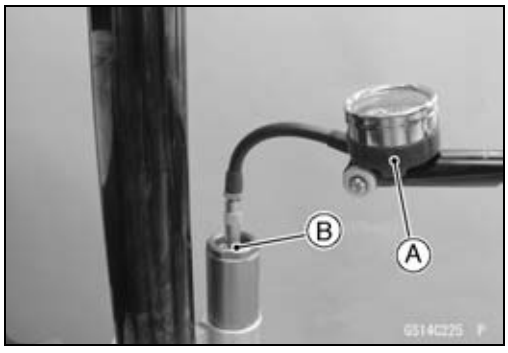

Balance Chamber Air Pressure

Standard:	**(US, CA, AU) 1 400 kPa (14.28 kgf/cm², 203 psi)**
	(EUR, BR) 1 200 kPa (12.24 kgf/cm², 174 psi)
Adjustable Range:	**530 ~ 1 500 kPa (5.40 ~ 15.30 kgf/cm², 76.9 ~ 218 psi)**

- Install the Air valve cap.
- Confirm the stroke of the front forks.
- Install the front forks to the motorcycle (see Front Fork Installation in the Suspension chapter).

○Temporarily tighten the front fork clamp bolts.

- After installing the front fork, tighten the cylinder unit [A].

  Special Tool - Top Plug Wrench, 50 mm [B]: 57001-1645

  Torque - Cylinder Unit: 76 N·m (7.7 kgf·m, 56 ft·lb)

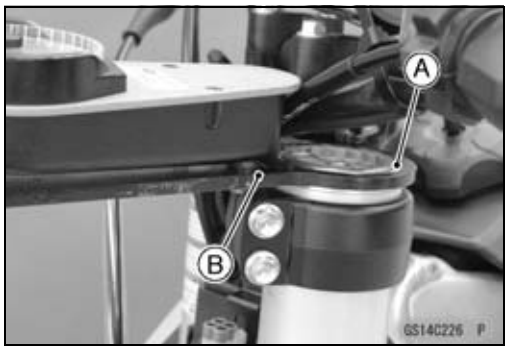

Periodic Maintenance Procedures

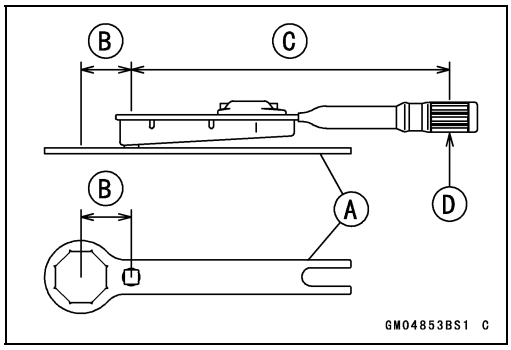

NOTE

○*The cylinder unit torque is specified to 76 N·m (7.7 kgf·m, 56 ft·lb) however, when you use the top plug wrench, 50 mm (special tool: 57001-1645) [A], reduce the torque to 90% of the specified value [67 N·m (6.8 kgf·m, 49 ft·lb)] due to the distance [B] between the center of the square hole, where the torque wrench is fitted, and that of the octagonal hole of the wrench.*

○*This torque value [67 N·m (6.8 kgf·m, 49 ft·lb)] is applicable when you use a torque wrench whose length [C] gives leverage of approximately 310 mm (12.2 in.) between the grip point [D] to the center of the coupling square.*

○*To obtain the correct tightening torque with your torque wrench, you need to calculate as follows.*

Formula:
a × b ÷ (b + c) = d
[a] Specified torque
[b] Length from center of square hole to grip point
[c] Offset = 44 mm
[d] Tightening torque

For an example:
76 N·m × 310 ÷ (310 + 44) = 67 N·m

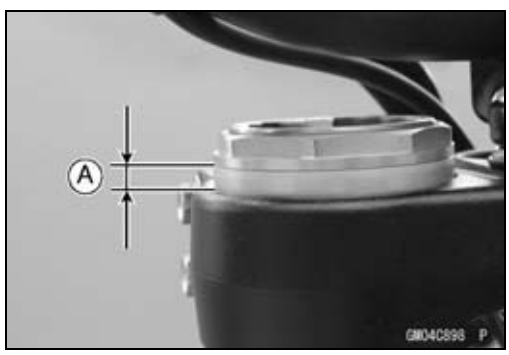

- Install the fork so that the distance [A] between the top end of the outer tube and the upper surface of the steering stem head is specified dimension.

  Standard: 5 mm (0.2 in.)

- Tighten:

  Torque - Front Fork Clamp Bolts (Upper): 23 N·m (2.3 kgf·m, 17 ft·lb)
  Front Fork Clamp Bolts (Lower): 23 N·m (2.3 kgf·m, 17 ft·lb)

NOTE

○*Tighten the two clamp bolts alternately two times to ensure even tightening torque.*

- Run the cables and hose according to the Cable, Wire, and Hose Routing section in the Appendix chapter.
- Install the fork protector and front brake hose clamps.
- Tighten:

  Torque - Fork Protector Bolts: 7.0 N·m (0.71 kgf·m, 62 in·lb)
  Front Brake Hose Clamp Bolts: 7.0 N·m (0.71 kgf·m, 62 in·lb)

- Install the removed parts (see appropriate chapters).

- Install the removed parts (see appropriate chapters).
- Adjust the compression and rebound damping force adjusters (see Compression Damping Adjustment and Rebound Damping Adjustment in the Suspension chapter).

Rear Shock Absorber Inspection

- Bounce [A] the rear of the motorcycle up and down and check for smooth suspension stroke.
- Remove the rear frame (see Rear Frame Removal in the Frame chapter).
- Check for a broken or collapsed spring.
- Check the shock for a bent shaft or oil leaks.

★If the shock does not smoothly or damaged, replace or repair defective parts.

Rear Shock Absorber Oil Change

The oil should be changed in the rear shock absorber at least once per racing season. The frequency for best performance must be based upon riding conditions and rider ability.

- Remove the rear shock absorber (see Rear Shock Absorber Removal in the Suspension chapter).
- Remove the shock absorber spring (see Rear Shock Absorber Spring Replacement in the Suspension chapter).

- Insert a suitable tool to center [A] of the reservoir cap, and release the nitrogen gas completely (keep the suitable tool inserted).

○For instructions on how to use the tool, follow the operation manual provided by the manufacturer.

⚠ WARNING

The shock contains high-pressure nitrogen gas that when suddenly released can eject oil and internal shock parts at high velocity, causing serious injury. To avoid injury, do not point a suitable tool toward your face or body when releasing nitrogen gas pressure since an oil mist is often released with the nitrogen. Always release nitrogen gas pressure before disassembling the rear shock absorber to prevent explosive separation of parts.

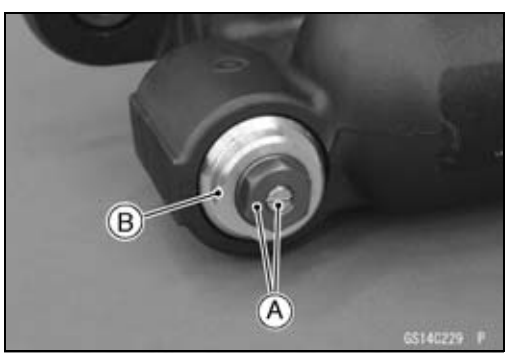

- Adjust the gas reservoir damping adjusters [A] to the softest position.
- Remove the adjuster assembly [B] and pump the rear shock to drain the oil.

Periodic Maintenance Procedures

- Using the hand press, push the reservoir cap [A].
- Remove:
  Circlip [B]

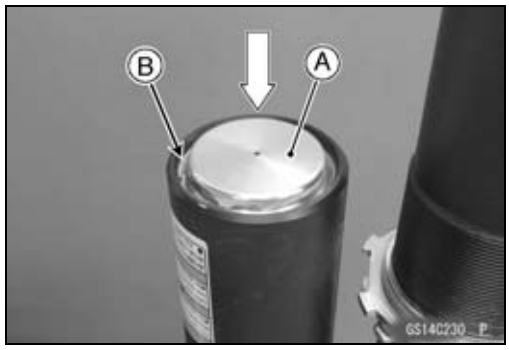

- Using the flat tip screwdrivers [A], remove the reservoir cap [B] with the bladder.

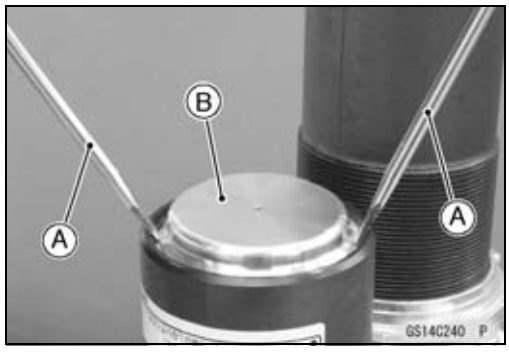

- Hold the lower portion of the rear shock absorber in a vise with soft jaws or heavy cloth.
- Tap [A] the hole [B] in the stopper [C] with suitable tools [D] to free the stopper from the rear shock body.

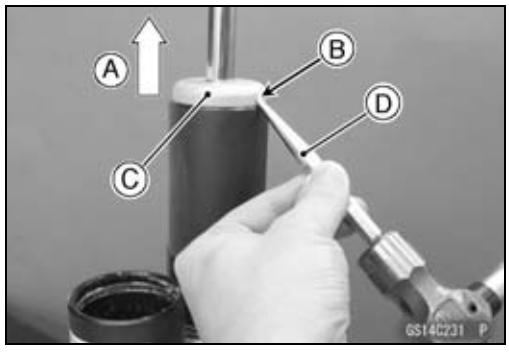

- Slide up the stopper of the piston rod, then lightly tap around the seal with a suitable rod and mallet, and push the seal assembly [A] 10 mm (0.39 in.) down [B].

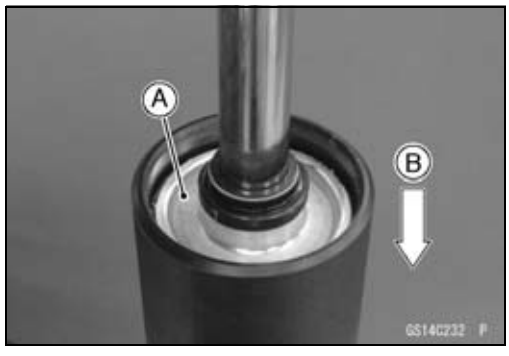

- Remove the circlip [A].
- Wrap a heavy cloth around the rear shock body and piston rod to prevent the oil diffusion.
- Lightly move the piston rod [B] back and forth, and pull out the piston rod assembly.
- Drain the oil.

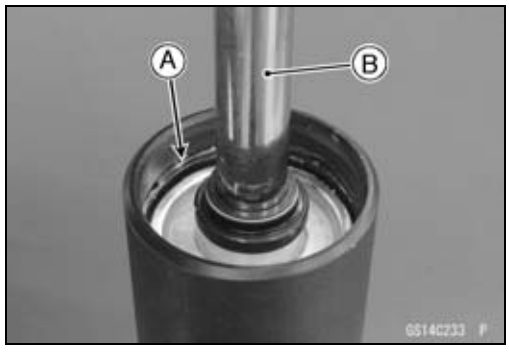

Periodic Maintenance Procedures

- Replace the O-ring [A] with a new one.
- Visually inspect the piston [B] and oil seal assembly [C].

★If the piston and oil seal assembly are badly scored, rusty or damaged, replace them.

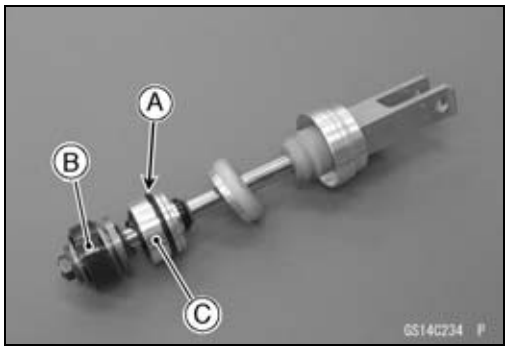

- Check the bladder [A] for sign of damage or crack.

★If necessary, replace it with a new one.

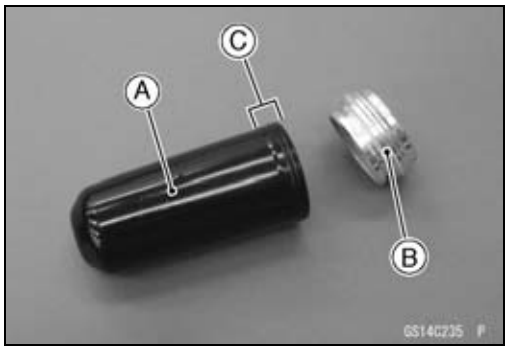

NOTICE
Do not use a damaged or partially collapsed bladder, because it may burst, gently reducing rear shock performance.

- Replace the gas reservoir cap [B] with a new one.
- Apply grease to the lip [C] of the bladder and install the reservoir cap.

- Temporarily install the gas reservoir damping adjuster assembly [A].
- Pour the rear shock oil of about 20 mL (0.68 US oz.) into the gas reservoir [B].
- Pour the rear shock oil of about 360 mL (12.2 US oz.) into the rear shock body [C].

Suspension Oil - SS-25 (1 L): 45024-0001

- Tilt the rear shock body slightly.
- Bleed the air by tapping the rear shock body several time.
- Hold the upper portion of the rear shock absorber in a vise with soft jaws or heavy cloth.

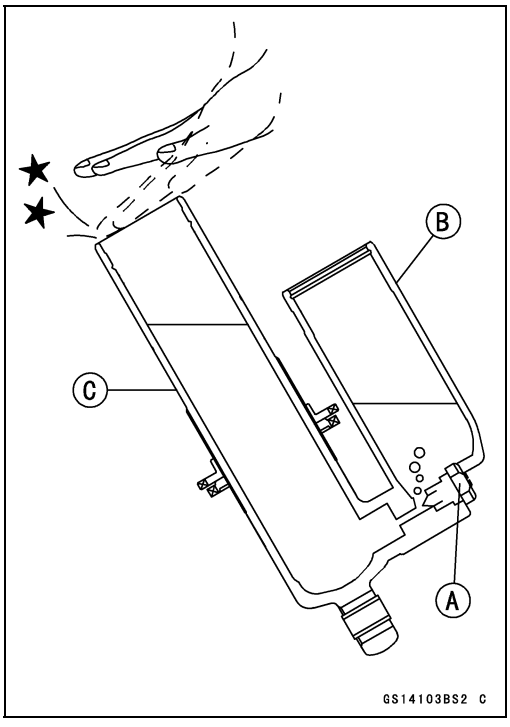

- Push the gas reservoir cap assembly [A] into the gas reservoir slowly until it just clears the circlip groove. Wipe out any spilled oil.
- Replace the circlip with a new one.

⚠ WARNING
Pressurized nitrogen gas can explode out of the shock reservoir cap if a weakened, deformed or flawed circlip is used, allowing oil and internal parts to burst out of the reservoir with great force and cause serious injury. To avoid injury, always use a new circlip whenever the shock is reassembled.

- Mount the circlip in the groove in the gas reservoir.

Periodic Maintenance Procedures

- Apply shock absorber oil to the bushing and O-ring of the piston rod assembly.
- Insert the piston end [A] of the piston rod assembly into the rear shock body [B] slowly. Do not insert the seal assembly [C] yet.
- Purge the air from rear shock body by slowly pumping the piston rod assembly in and out.

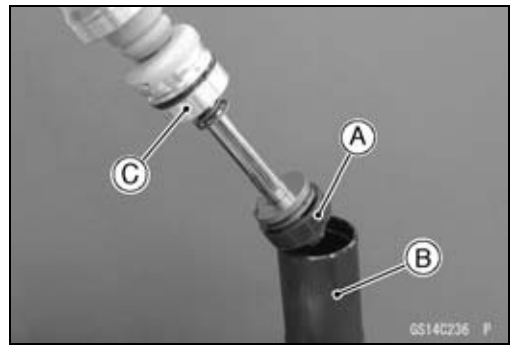

- Push the seal assembly into the rear shock body until it just clears the circlip groove.
- Replace the circlip with a new one.
- Fit the circlip [A] into the groove in the rear shock body [B].
- Pull up the piston rod assembly [C] against the circlip.

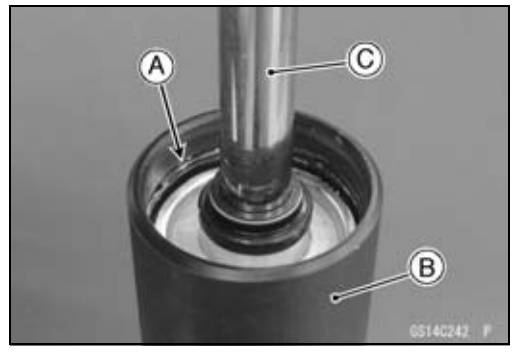

⚠ WARNING

If the circlip is not a certain fit in the groove in the rear shock body, the piston rod assembly may come out of the rear shock body when injecting the nitrogen gas or riding the motorcycle. This could cause a crash resulting in serious injury or death. When the circlip is removed, replace it with a new one and correctly install it in the groove.

- Force the stopper [A] into the rear shock body by lightly tapping around the edge of the stopper with a plastic mallet.
- Fully extend the piston rod assembly.

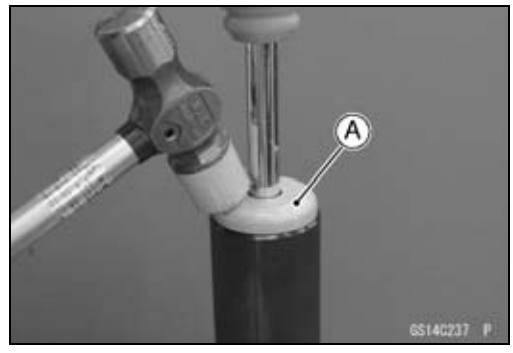

- Remount the upper portion of the shock absorber in a vise with soft jaws or heavy cloth.
- Remove the gas reservoir damping adjuster assembly.
- Fill the specified oil [A] into the damping adjuster assembly hole.

  Suspension Oil - SS-25 (1 L): 45024-0001

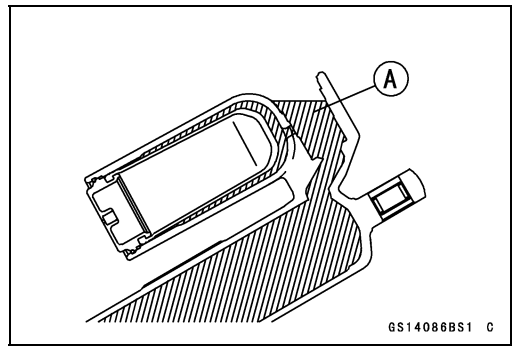

Periodic Maintenance Procedures

- Purge the air from between the gas reservoir [A] and rear shock body [B] by slowly pumping the piston rod [C] in and out.

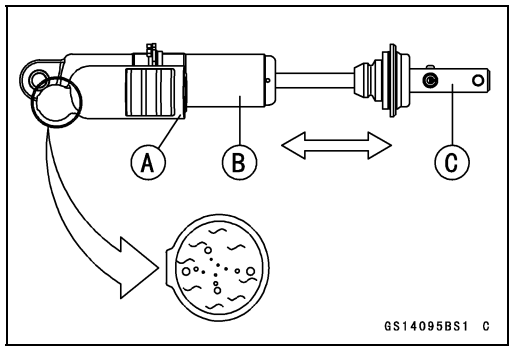

- Add the specified oil up to the damping adjuster assembly hole neck [A].

NOTE

○*Hold the adjuster assembly hole facing up and turn the shock absorber to bleed the air from the reservoir completely.*

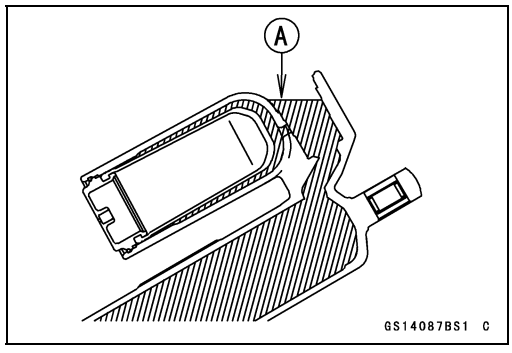

- Fully extend the piston rod assembly.
- Inject the nitrogen gas to a pressure of **50 kPa (0.5 kgf/cm², 7 psi)** through the valve on the gas reservoir.
- Check the rear shock body and gas reservoir for oil and gas leaks.

★If there are leaks, reassemble the related parts.

- Replace the O-rings [A] with new ones and apply shock absorber oil.
- Install the gas reservoir damping adjuster assembly [B] slowly.
- Tighten:

Torque - Gas Reservoir Damping Adjuster Assembly: 29.5 N·m (3.01 kgf·m, 21.8 ft·lb)

- Wipe off all oil from the shock absorber body and piston rod.

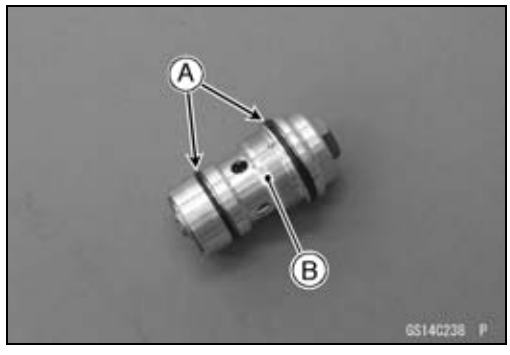

- Inject the nitrogen gas up to the **980 kPa (10.0 kgf/cm², 142 psi)** pressure.

⚠ WARNING

High pressure gas is dangerous and can explode, causing serious injury. To avoid injury, have a qualified mechanic pressurize the shock reservoir with nitrogen gas only. Do not use air or other gases, since they may cause premature wear, rust, fire hazard or substandard performance.

- Install the spring (see Rear Shock Absorber Spring Replacement).
- Install the rear shock absorber (see Rear Shock Absorber Installation in the Suspension chapter).
- Adjust the spring preload (see Spring Preload Adjustment in the Suspension chapter).
- Install the removed parts (see appropriate chapters).

Periodic Maintenance Procedures

Swingarm and Uni-Trak Linkage Inspection

- Check the uni-trak component parts for wear periodically, or whenever excessive play is suspected.
- Using the jack under the frame, raise the rear wheel off the ground.

Special Tools - Jack: 57001-1238
Jack Attachment: 57001-1608

- Pump the seat down and up [A] 4 or 5 times, and inspect the smooth stroke.

★If the uni-trak linkage does not smooth stroke or noise is found, inspect the uni-trak linkage bearings.

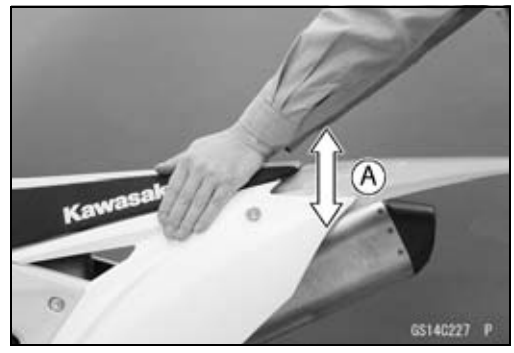

- Push and pull on the swingarm [A] to check for wear.

★A small amount of play on the swingarm is normal and no corrective action is needed. However, if excessive play is felt, remove the uni-trak parts from the frame and check for wear.

Swingarm and Uni-Trak Linkage Pivot Lubrication

- Refer to the Swingarm Bearing Installation and Rocker Arm Bearing Installation in the Suspension chapter.

Steering

Steering Inspection

- Using the jack, raise the front wheel off the ground.

Special Tools - Jack: 57001-1238
Jack Attachment: 57001-1608

- With the front wheel pointing straight ahead, alternately nudge each end of the handlebar.

○The front wheel should swing fully to left and right from the force of gravity until the fork hits the stop.

★If the steering binds or catches before the stop, check the routing of the cables, hoses, and harnesses.

★If the steering feels tight, adjust or lubricate the steering.

- Feel for steering looseness by pushing and pulling [A] the forks.

★If you feel looseness, adjust the steering.

Steering Adjustment

- Using the jack, raise the front wheel off the ground.

Special Tools - Jack: 57001-1238
Jack Attachment: 57001-1608

- Remove:
  Number Plate (see Number Plate Removal in the Frame chapter)
  Handlebar Pad [A]

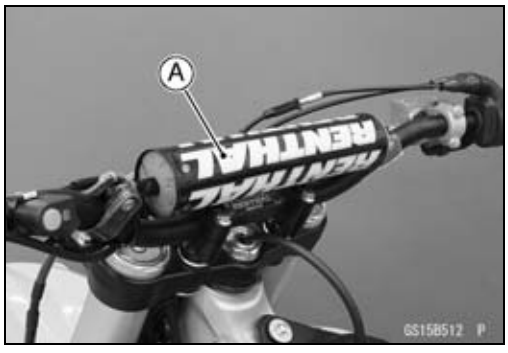

- Remove:
  Handlebar Clamp Bolts [A]
  Handlebar Clamps [B]
  Handlebar [C]

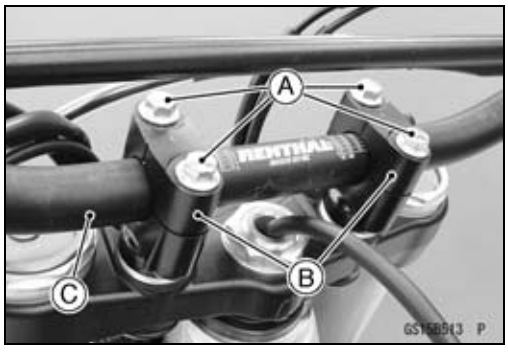

- Loosen the front fork clamp bolts (upper) [A] on both sides.
- Remove the steering stem head nut [B] and washer [C].
- Remove the steering stem head [D].

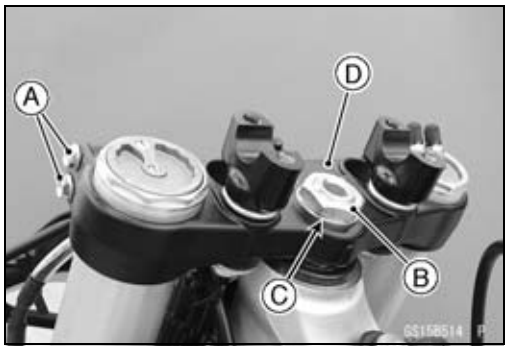

Periodic Maintenance Procedures

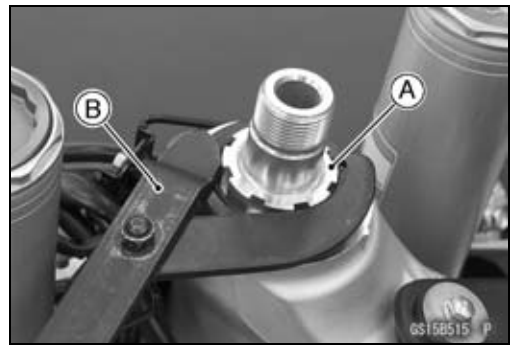

- Turn the steering stem nut [A] with the steering stem nut wrench [B] to obtain the proper adjustment.

★If the steering is too tight, loosen the stem nut a fraction of a turn; if the steering is too loose, tighten the nut a fraction of a turn.

Special Tool - Steering Stem Nut Wrench: 57001-1100

NOTE

○*Turn the nut 1/8 turn at a time maximum.*

- Install the steering stem head and washer.
- Tighten:

Torque - Steering Stem Head Nut: 100 N·m (10.2 kgf·m, 73.8 ft·lb)
Front Fork Clamp Bolts (Upper): 23 N·m (2.3 kgf·m, 17 ft·lb)

NOTE

○*Tighten the two clamp bolts alternately two times to ensure even tightening torque.*

- Check the steering again.

★If the steering is too tight or too loose, repeat the adjustment as mentioned above.

- Install the removed parts (see appropriate chapters).

Steering Stem Bearing Lubrication

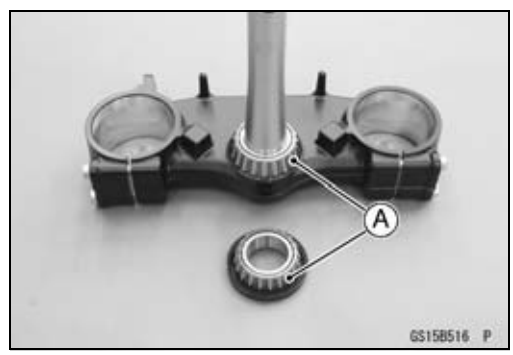

- Remove the steering stem (see Steering Stem, Stem Bearing Removal in the Steering chapter).
- Using a high flash-point solvent, wash the upper and lower tapered rollers in the cages, and wipe the upper and lower outer races, which are press-fitted into the frame head pipe, clean off grease and dirt.
- Visually inspect the outer races and rollers.

★Replace the bearing assemblies if they show wear or damage.

- Pack the upper and lower tapered roller bearings [A] in the cages with grease, and apply a light coat of grease to the upper and lower outer races.
- Install the steering stem (see Steering Stem, Stem Bearing Installation in the Steering chapter).
- Adjust the steering (see Steering Adjustment).

Frame

Frame Inspection

- Clean the frame with steam cleaner.
- Visually inspect the frame and rear frame for cracks, dents, bending, or warp.

★If there is any damage to the frame, replace it.

⚠ WARNING

A repaired frame may fail in use, possibly causing an accident resulting in injury or death. If the frame is bent, dented, cracked, or warped, replace it.

Electrical System

Spark Plug Cleaning and Inspection

- Remove:
  Seat (see Seat Removal in the Frame chapter)
  Fuel Tank (see Fuel Tank Removal in the Fuel System (DFI) chapter)
  Spark Plug Cap

NOTICE
When removing the spark plug cap, do not pull the lead. The lead could be broken off or damaged the wires inside.

- Clean the plug hole [A], using the compressed air [B].

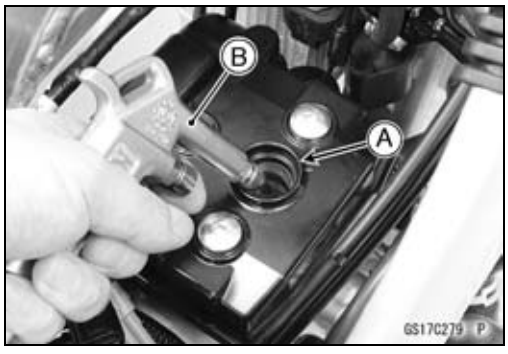

- Remove the spark plug [A], using the spark plug wrench.
  Special Tool - Spark Plug Wrench, Hex 16 [B]: 57001-1262
- The plug may also be cleaned using a high flash-point solvent and a nonmetal brush (nylon etc.).

★If the spark plug electrodes are corroded or damaged, or if the insulator is cracked, replace the plug. Use the standard spark plug.

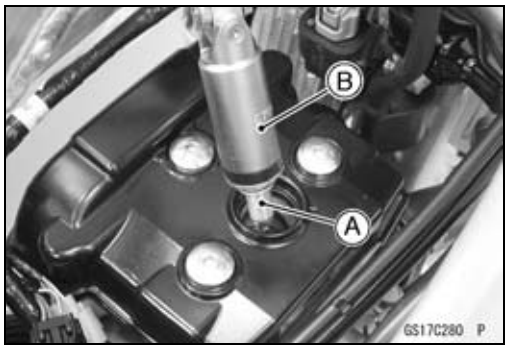

- Measure the gap [A] with a wire-type thickness gauge.

★If the gap is incorrect, carefully bend the side electrode [B] with a suitable tool to obtain the correct gap.

Spark Plug Gap
Standard: 0.8 ~ 0.9 mm (0.03 ~ 0.04 in.)

- Install the spark plug, using the spark plug wrench.
  Special Tool - Spark Plug Wrench, Hex 16: 57001-1262
- Tighten:
  Torque - Spark Plug: 13 N·m (1.3 kgf·m, 115 in·lb)

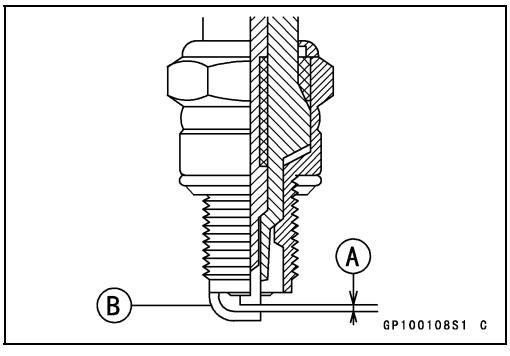

Periodic Maintenance Procedures

- Fit the spark plug cap [A] so that it is aligned with the line [B] on the cylinder head cover.
- Pull up the plug cap to make sure the installation of the spark plug cap.
- Install the removed parts (see appropriate chapters).

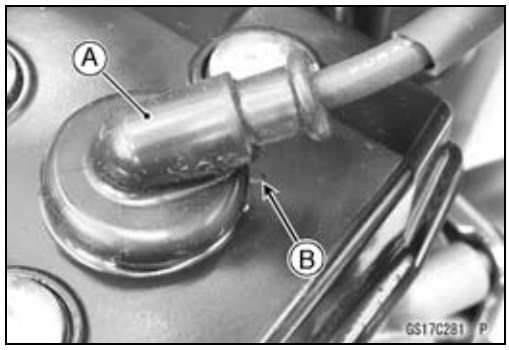

Spark Plug Replacement

- Refer to the Spark Plug Cleaning and Inspection.

General Lubrication and Cable Inspection

Lubrication

- Before lubricating each part, clean off any rusty spots with rust remover and wipe off any grease, oil, dirt, or grime.
- Lubricate the points listed below with indicated lubricant.

NOTE

○*Whenever the vehicle has been operated under wet or rainy conditions, or especially after using a high-pressure water spray, perform the general lubrication.*

Points: Lubricate with Grease.
Clutch Inner Cable Upper and Lower Ends [A]
Throttle Inner Cable Upper End
Brake Lever Pivot Bolt
Clutch Lever Pivot Bolt
Brake Pedal Bolt

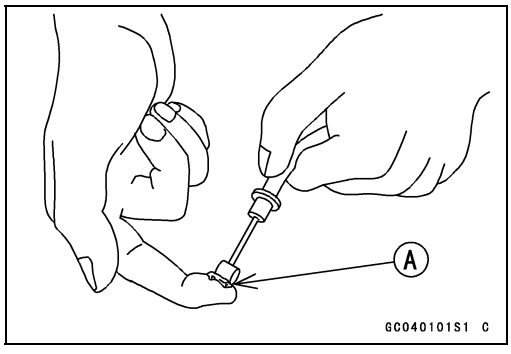

Cables: Lubricate with Rust Inhibitor.
Throttle Inner Cables
Clutch Inner Cable

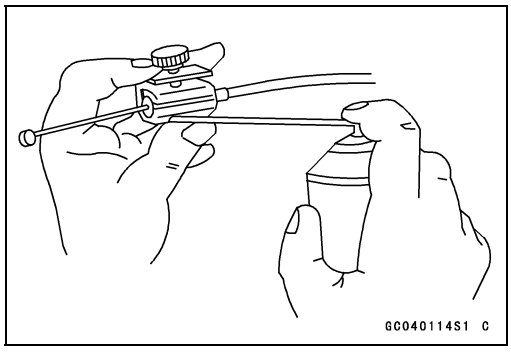

Pivots: Lubricate with engine oil.
Rear Master Cylinder Joint Pin

Cable Inspection

- With the cable disconnected at the both ends, the cable should move freely [A] within the cable housing.

★If cable movement is not free after lubricating, if the cable is frayed [B], or if the cable housing is kinked [C], replace the cable.

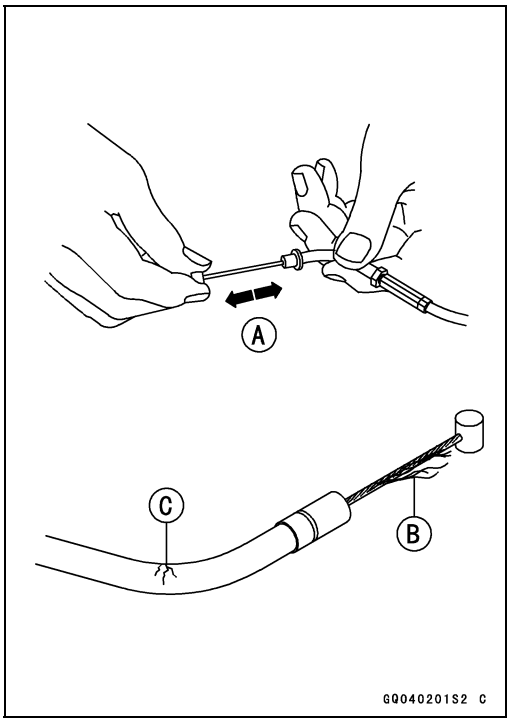

Nut, Bolt, and Fastener Tightness Inspection

Tightness Inspection

- Check the tightness of the bolts and nuts listed here in accordance with the Periodic Maintenance Chart. Also, check to see that each cotter pin is in place and in good condition.

NOTE

○*For the engine fasteners, check the tightness of them when the engine is cold (at room temperature).*

Periodic Maintenance Procedures

★If there are loose fasteners, retighten them to the specified torque following the specified tightening sequence. Refer to the Torque and Locking Agent section in this chapter for torque specifications. For each fastener, first loosen it by 1/2 turn, then tighten it.

★If cotter pins are damaged, replace them with new ones.

Nut, Bolt and Fastener to be checked

Wheels:
- Spoke Nipples
- Front Axle Nut
- Front Axle Clamp Bolts
- Rear Axle Nut Cotter Pin
- Rear Axle Nut

Final Drive:
- Chain Adjuster Locknut
- Rear Sprocket Nuts

Brakes:
- Front Master Cylinder Clamp Bolts
- Brake Lever Pivot Bolt Locknut
- Front Caliper Mounting Bolts
- Brake Pedal Bolt
- Rear Master Cylinder Push Rod Cotter Pin
- Rear Master Cylinder Mounting Bolts
- Rear Caliper Holder Shaft

Suspension:
- Front Fork Clamp Bolts
- Rear Shock Absorber Nuts
- Swingarm Pivot Shaft Nut
- Uni-Trak Link Nuts

Steering:
- Steering Stem Head Nut
- Handlebar Clamp Bolts

Engine:
- Throttle Cable Adjuster Locknut(s)
- Engine Mounting Bolts, Nuts
- Engine Bracket Bolts, Nuts
- Shift Pedal Bolt
- Muffler Mounting Bolts
- Exhaust Pipe Holder Nuts
- Muffler Pipe Clamp Bolt
- Clutch Cable Adjuster Locknut
- Clutch Lever Pivot Bolt Locknut
- Kick Pedal Bolt

Others:
- Footpeg Cotter Pins
- Rear Frame Mounting Bolts
- Front Fender Bolts

Fuel System (DFI)

Table of Contents

Exploded View 3-4
Specifications 3-8
Special Tools and Sealant 3-9
DFI System 3-10
DFI Parts Location 3-13
DFI Servicing Precautions 3-15
  DFI Servicing Precautions 3-15
Troubleshooting the DFI System 3-16
    Outline 3-16
  Inquiries to Rider 3-19
DFI System Troubleshooting Guide 3-21
Self-Diagnosis 3-25
    Self-diagnosis Outline 3-25
    Self-diagnosis Procedures 3-25
    How to Read Service Codes 3-28
    How to Erase Service Codes 3-28
    Service Code Table 3-29
    Backups 3-30
Throttle Sensor (Service Code 11) 3-31
    Throttle Sensor Replacement 3-31
    Throttle Sensor Input Voltage Inspection 3-33
    Throttle Sensor Output Voltage Inspection 3-34
    Throttle Sensor Resistance Inspection 3-35
Intake Air Pressure Sensor (Service Code 12) 3-37
    Intake Air Pressure Sensor Removal 3-37
    Intake Air Pressure Sensor Installation 3-37
    Intake Air Pressure Sensor Input Voltage Inspection 3-38
    Intake Air Pressure Sensor Output Voltage Inspection 3-39
Intake Air Temperature Sensor (Service Code 13) 3-43
    Intake Air Temperature Sensor Removal/Installation 3-43
    Intake Air Temperature Sensor Output Voltage Inspection 3-43
    Intake Air Temperature Sensor Resistance Inspection 3-44
Water Temperature Sensor (Service Code 14) 3-46
    Water Temperature Sensor Removal/Installation 3-46
    Water Temperature Sensor Output Voltage Inspection 3-46
    Water Temperature Sensor Resistance Inspection 3-48
Crankshaft Sensor (Service Code 21) 3-49
    Crankshaft Sensor Removal/Installation 3-49
    Crankshaft Sensor Resistance Inspection 3-49
    Crankshaft Sensor Peak Voltage Inspection 3-49
Gear Position Switch (Service Code 25) 3-50
    Gear Position Switch Removal 3-50
    Gear Position Switch Installation 3-50
    Gear Position Switch Inspection 3-51
Vehicle-down Sensor (Service Code 31) 3-52
    Vehicle-down Sensor Removal 3-52
    Vehicle-down Sensor Installation 3-52
    Vehicle-down Sensor Input Voltage Inspection 3-53
    Vehicle-down Sensor Output Voltage Inspection 3-54
Fuel Injector (Service Code 41) 3-56

Fuel Injector Removal 3-56
Fuel Injector Installation 3-56
Fuel Injector Audible Inspection 3-57
Fuel Injector Resistance Inspection 3-57
Fuel Injector Power Supply Voltage Inspection 3-58
Fuel Injector Output Voltage Inspection 3-59
Injector Fuel Line Inspection 3-59
Fuel Pump (Service Code 46) 3-61
Fuel Pump Removal 3-61
Fuel Pump Installation 3-61
Fuel Pump Operation Inspection 3-62
Fuel Pump Operating Voltage Inspection 3-62
Pressure Regulator Removal 3-63
Fuel Filter Cleaning 3-63
Ignition Coil (Service Code 51) 3-65
Ignition Coil Removal/Installation 3-65
Ignition Coil Primary Peak Voltage Inspection 3-65
Orange FI Warning Indicator Light (LED) 3-66
Orange FI Warning Indicator Light (LED) Inspection 3-66
ECU 3-68
ECU Identification 3-68
ECU Removal 3-68
ECU Installation 3-68
ECU Power Supply Inspection 3-69
Fuel Line 3-71
Fuel Pressure Inspection 3-71
Fuel Flow Rate Inspection 3-72
Throttle Grip and Cable 3-74
Throttle Grip (Throttle Cable) Free Play Inspection 3-74
Throttle Grip (Throttle Cable) Free Play Adjustment 3-74
Throttle Cable Replacement 3-74
Throttle Cable Lubrication 3-75
Throttle Cable Inspection 3-76
Throttle Body Assy 3-77
Idle Speed Inspection 3-77
Throttle Bore Cleaning 3-77
Throttle Body Assy Removal 3-77
Throttle Body Assy Installation 3-78
Throttle Body Assy Disassembly 3-78
Throttle Body Assy Assembly 3-79
Air Cleaner 3-81
Air Cleaner Housing Removal 3-81
Air Cleaner Housing Installation 3-81
Element Removal/Installation 3-81
Element Cleaning and Inspection 3-81
Fuel Tank 3-82
Fuel Tank Removal 3-82
Fuel Tank Installation 3-84
Fuel Tank Cleaning 3-84

This page intentionally left blank.

Exploded View

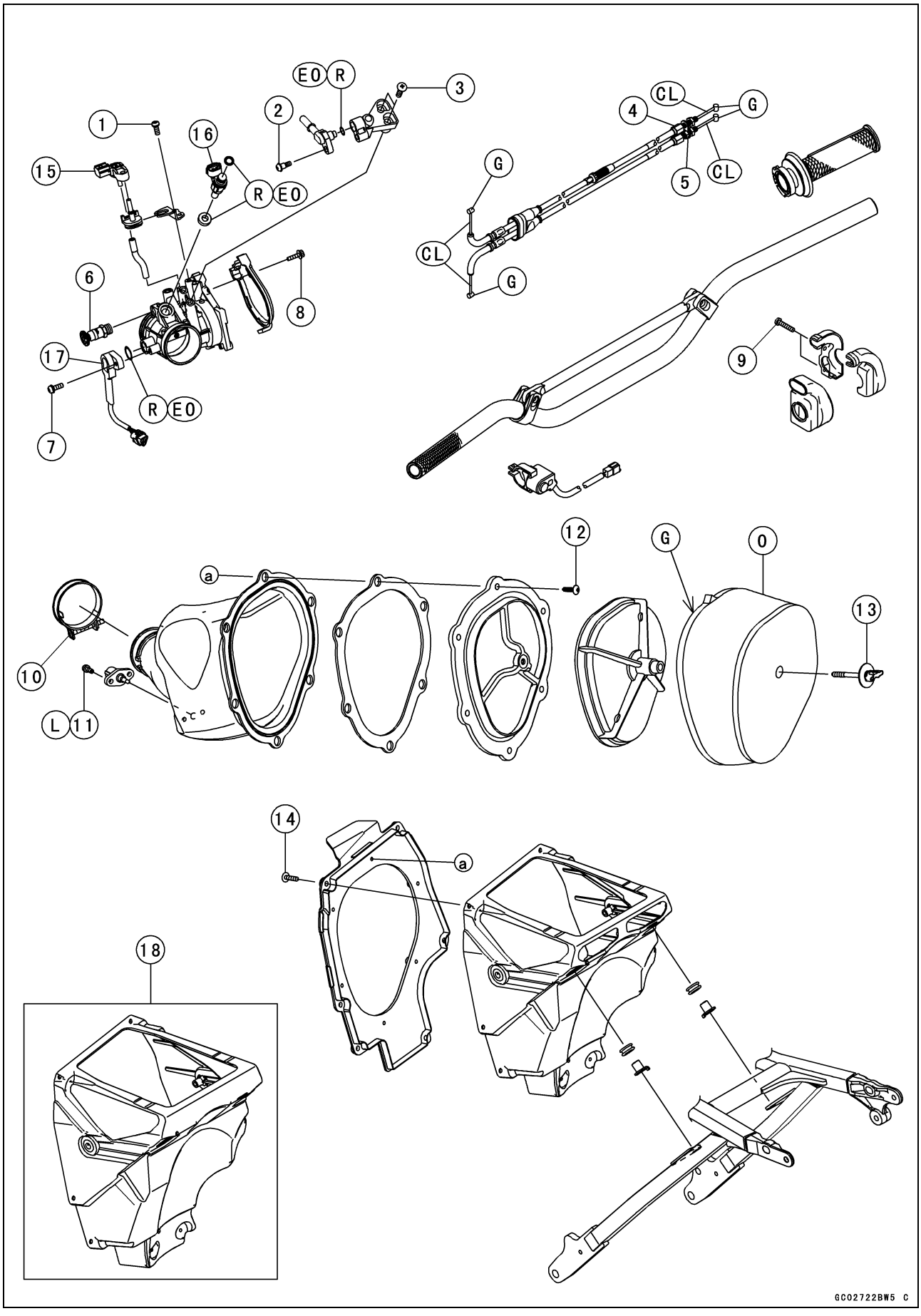

Exploded View

No.	Fastener	Torque			Remarks
		N·m	kgf·m	ft·lb	
1	Intake Air Pressure Sensor Bracket Screw	3.4	0.35	30 in·lb	
2	Delivery Pipe Joint Screw	3.4	0.35	30 in·lb	
3	Delivery Pipe Screws	3.4	0.35	30 in·lb	
4	Accelerator Cable Bolt	3.0	0.31	27 in·lb	
5	Decelerator Cable Bolt Locknut	3.0	0.31	27 in·lb	
6	Idle Adjusting Screw Assy	2.1	0.21	19 in·lb	
7	Throttle Sensor Mounting Screw	3.4	0.35	30 in·lb	
8	Throttle Pulley Cover Bolt	4.0	0.41	35 in·lb	
9	Throttle Cable Housing Screws	3.8	0.39	34 in·lb	
10	Air Cleaner Duct Clamp Bolt	2.0	0.20	18 in·lb	
11	Intake Air Temperature Sensor Bolt	3.3	0.34	29 in·lb	L
12	Air Cleaner Duct Screws	1.2	0.12	11 in·lb	
13	Air Cleaner Element Wing Bolt (for reference)	1.2	0.12	11 in·lb	
14	Air Cleaner Housing Screws	1.2	0.12	11 in·lb	

15. Intake Air Pressure Sensor
16. Fuel Injector
17. Throttle Sensor
18. Other than US and CA Models

CL: Apply cable lubricant.
EO: Apply engine oil.
G: Apply grease.
L: Apply a non-permanent locking agent.
O: Apply high-quality foam air filter oil.
R: Replacement Parts

Exploded View

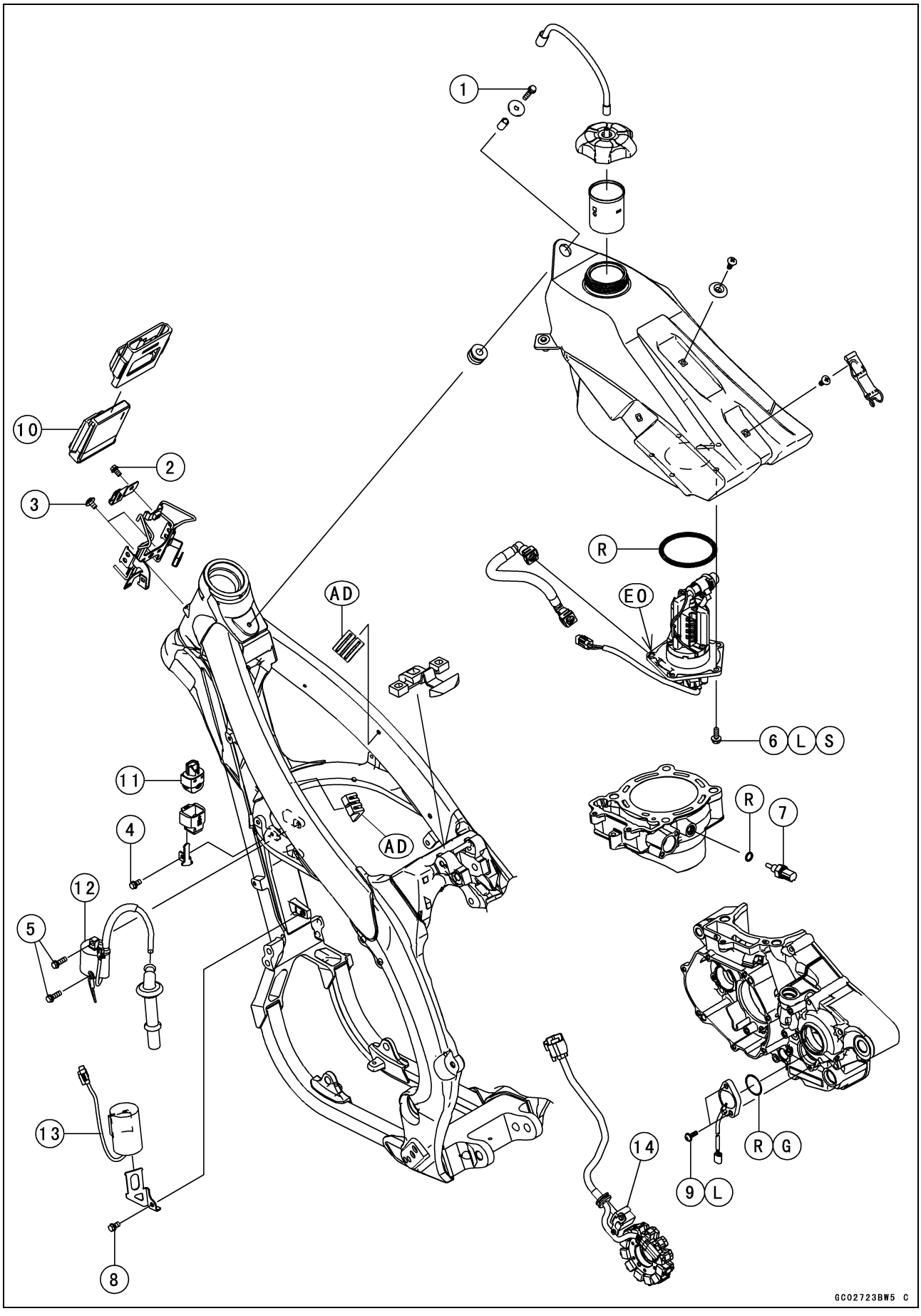

Exploded View

No.	Fastener	Torque			Remarks
		N·m	kgf·m	ft·lb	
1	Fuel Tank Bolt	8.0	0.82	71 in·lb	
2	Diagnostic Connector Bracket Bolt	5.0	0.51	44 in·lb	
3	ECU Bracket Bolts	8.0	0.82	71 in·lb	
4	Vehicle-down Sensor Bracket Bolt	7.0	0.71	62 in·lb	
5	Ignition Coil Bolts	8.0	0.82	71 in·lb	
6	Fuel Pump Bolts	10	1.0	89 in·lb	L, S
7	Water Temperature Sensor	12	1.2	106 in·lb	
8	Capacitor Bracket Bolts	8.0	0.82	71 in·lb	
9	Gear Position Switch Screws	3.0	0.31	27 in·lb	

10. ECU
11. Vehicle-down Sensor
12. Ignition Coil
13. Capacitor
14. Crankshaft Sensor

AD: Apply adhesive.
EO: Apply engine oil.
G: Apply grease.
S: Follow the specified tightening sequence.
L: Apply a non-permanent locking agent.
R: Replacement Parts

Specifications

Item	Standard
Digital Fuel Injection System	
Idle Speed	2 000 ±50 r/min (rpm)
Throttle Body Assy:	
Throttle Valve	Single throttle valve
Bore	ϕ43 mm (1.7 in.)
ECU:	
Make	KEIHIN
Type	Digital memory type, with built in IC igniter, sealed with resin
Fuel Pressure	294 kPa (3.0 kgf/cm², 43 psi) with engine idling
Fuel Pump:	
Type	Wesco pump
Discharge	33 mL (1.1 US oz.) or more for 3 seconds
Fuel Injector:	
Type	EAT821
Nozzle Type	Fine atomizing type with 4 holes
Resistance	About 11.5 ~ 12.5 Ω @20°C (68°F)
Throttle Sensor:	
Input Voltage	DC 4.75 ~ 5.25 V
Output Voltage	DC 0.57 ~ 0.63 V at idle throttle opening
	DC 3.555 ~ 3.985 V at full throttle opening (for reference)
Resistance	4 ~ 6 kΩ
Intake Air Pressure Sensor:	
Input Voltage	DC 4.75 ~ 5.25 V
Output Voltage	DC 3.80 ~ 4.20 V at standard atmospheric pressure (101.32 kPa, 76 cmHg)
Intake Air Temperature Sensor:	
Output Voltage	About DC 2.28 ~ 3.43 V @20°C (68°F)
Resistance	0.909 ~ 1.363 kΩ @40°C (104°F)
	0.124 ~ 0.186 kΩ @100°C (212°F)
Water Temperature Sensor:	
Output Voltage	About DC 2.80 ~ 2.97 V @20°C (68°F)
Resistance	see text
Gear Position Switch:	
Resistance	see text
Vehicle-down Sensor:	
Detection Angle	More than 60 ~ 70° for each bank
Input Voltage	DC 4.75 ~ 5.25 V
Output Voltage	With sensor tilted 60 ~ 70° or more right or left: DC 0.65 ~ 1.35 V
	With sensor arrow mark pointed up: DC 3.55 ~ 4.45 V
Throttle Grip and Cables	
Throttle Grip Free Play	2 ~ 3 mm (0.08 ~ 0.12 in.)

Special Tools and Sealant

Oil Pressure Gauge, 5 kgf/cm²:
57001-125

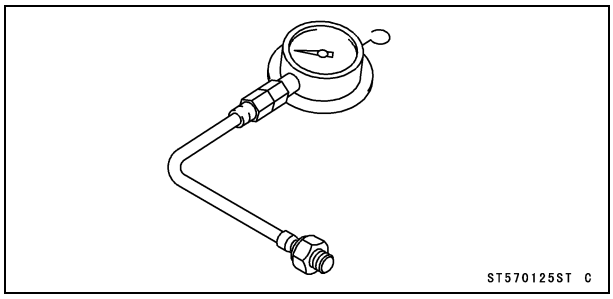

Fuel Pressure Gauge Adapter:
57001-1593

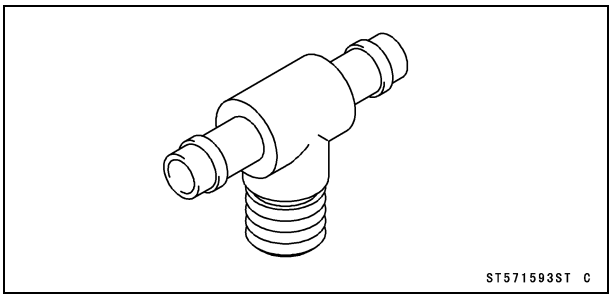

Fork Oil Level Gauge:
57001-1290

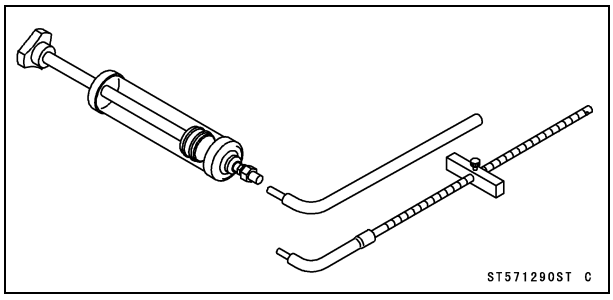

Fuel Hose:
57001-1607

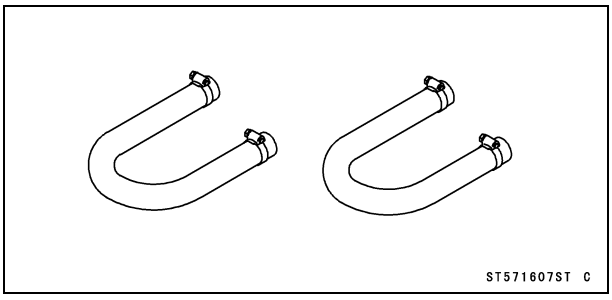

Vacuum Gauge:
57001-1369

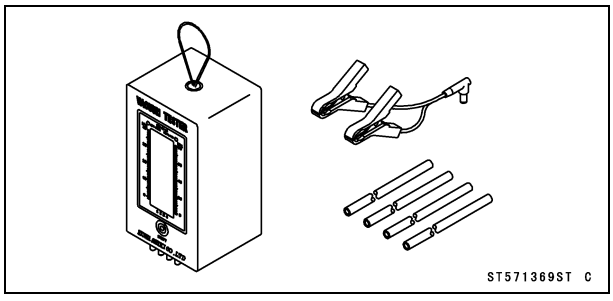

Measuring Adapter:
57001-1700

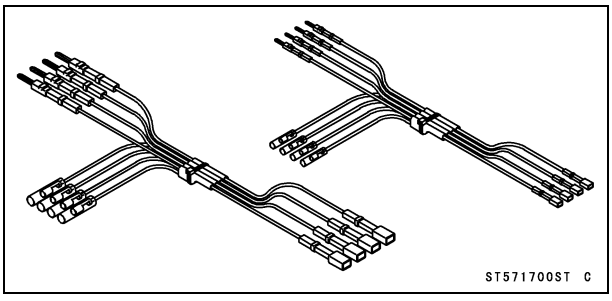

Filler Cap Driver:
57001-1454

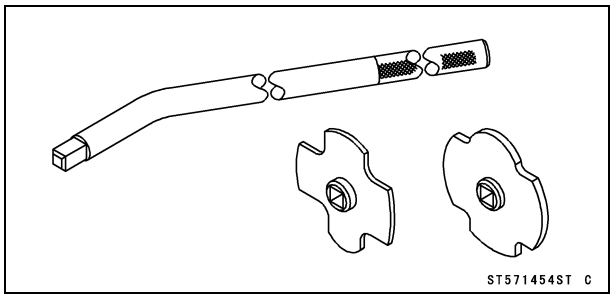

Liquid Gasket, TB1211:
56019-120

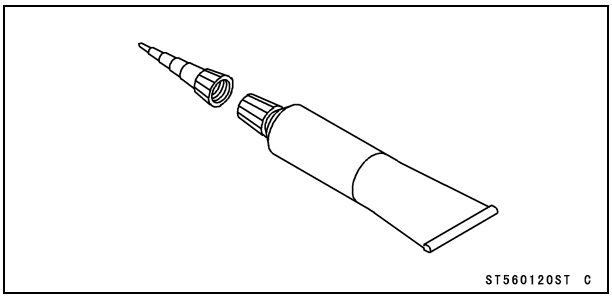

Needle Adapter Set:
57001-1457

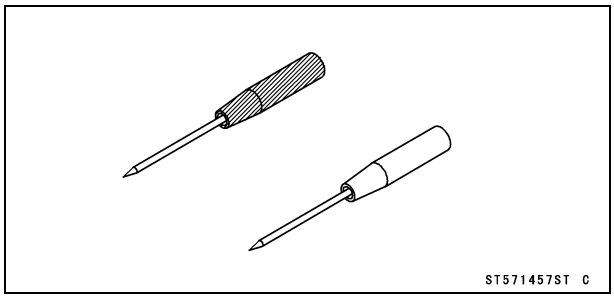

DFI System

DFI System

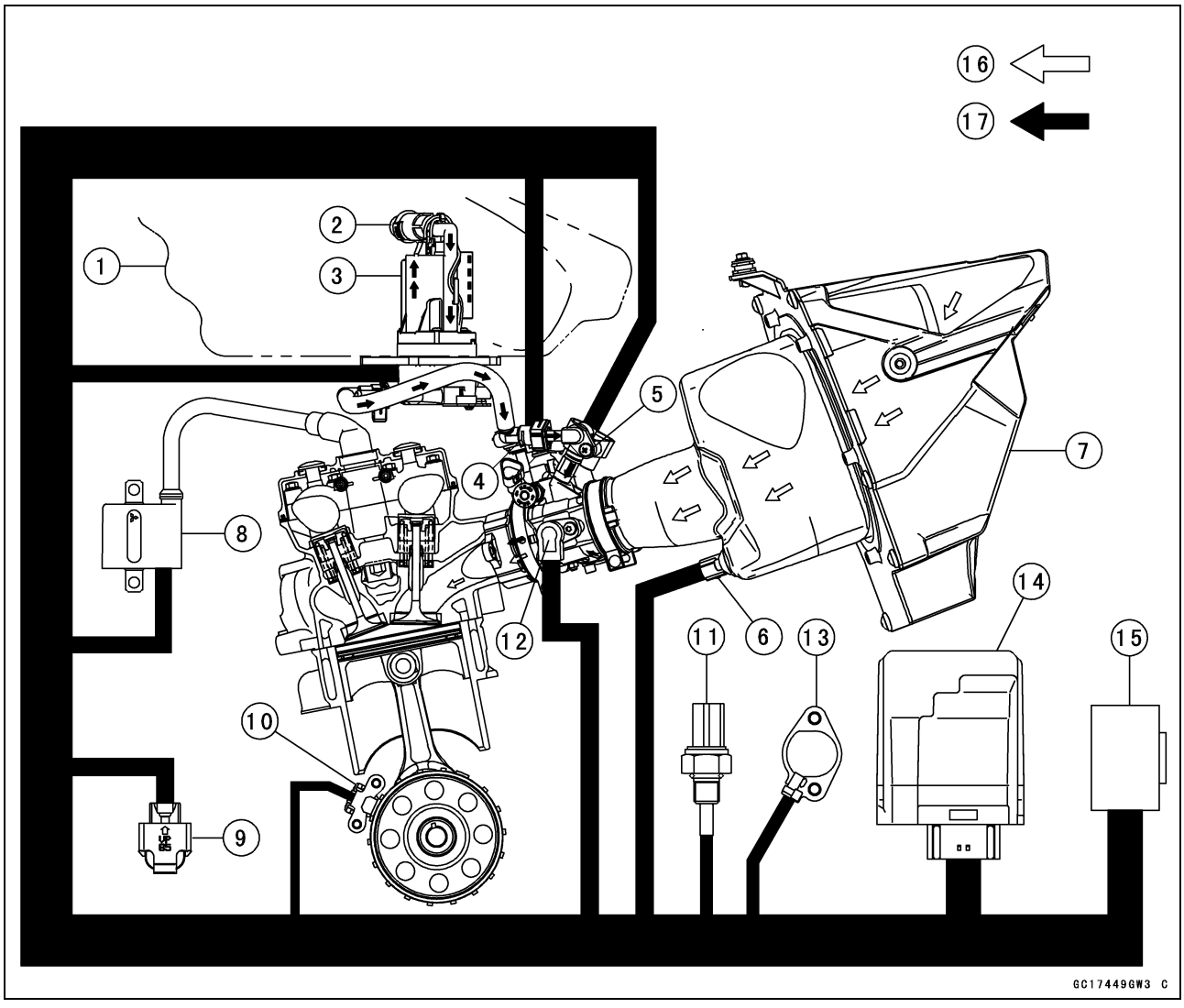

1. Fuel Tank
2. Pressure Regulator
3. Fuel Pump
4. Intake Air Pressure Sensor
5. Fuel Injector
6. Intake Air Temperature Sensor
7. Air Cleaner Housing
8. Ignition Coil
9. Vehicle-down Sensor
10. Crankshaft Sensor
11. Water Temperature Sensor
12. Throttle Sensor
13. Gear Position Switch
14. ECU
15. Capacitor
16. Air Flow
17. Fuel Flow

DFI System

DFI System Wiring Diagram

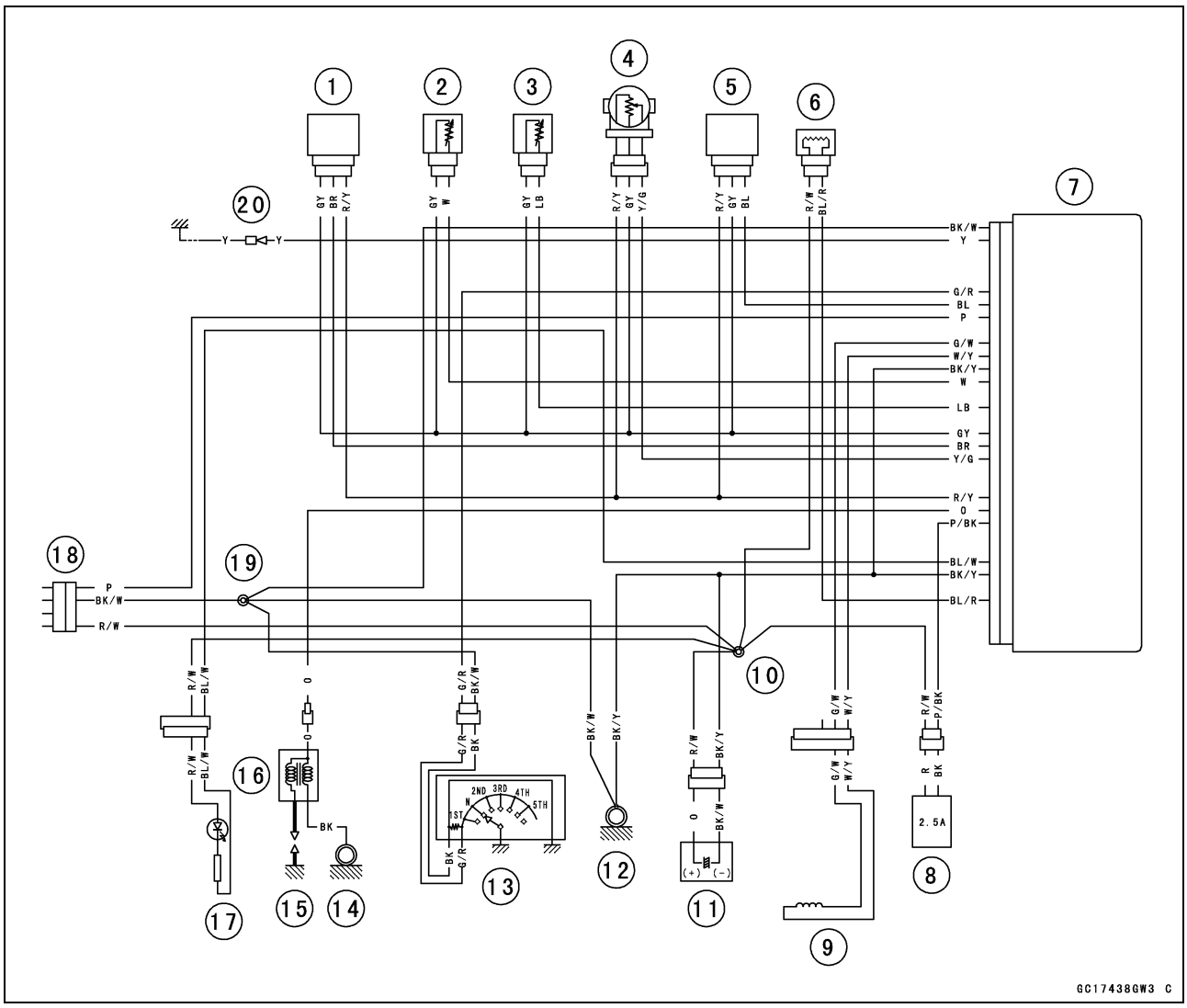

Part Names

1. Vehicle-down Sensor
2. Water Temperature Sensor
3. Intake Air Temperature Sensor
4. Throttle Sensor
5. Intake Air Pressure Sensor
6. Fuel Injector
7. ECU
8. Fuel Pump
9. Crankshaft Sensor
10. Water-proof Joint 1
11. Capacitor
12. Frame Ground 1
13. Gear Position Switch
14. Frame Ground 2
15. Spark Plug
16. Ignition Coil
17. Orange Launch Control Mode/FI Warning Indicator Light (LED)
18. Kawasaki Diagnostic System Connector
19. Water-proof Joint 2
20. Self-diagnosis Terminal

○Color Codes:

BK: Black	GY: Gray	PU: Purple
BL: Blue	LB: Light Blue	R: Red
BR: Brown	LG: Light Green	V: Violet
CH: Chocolate	O: Orange	W: White
DG: Dark Green	P: Pink	Y: Yellow
G: Green		

DFI System

Terminal Numbers of ECU Connectors

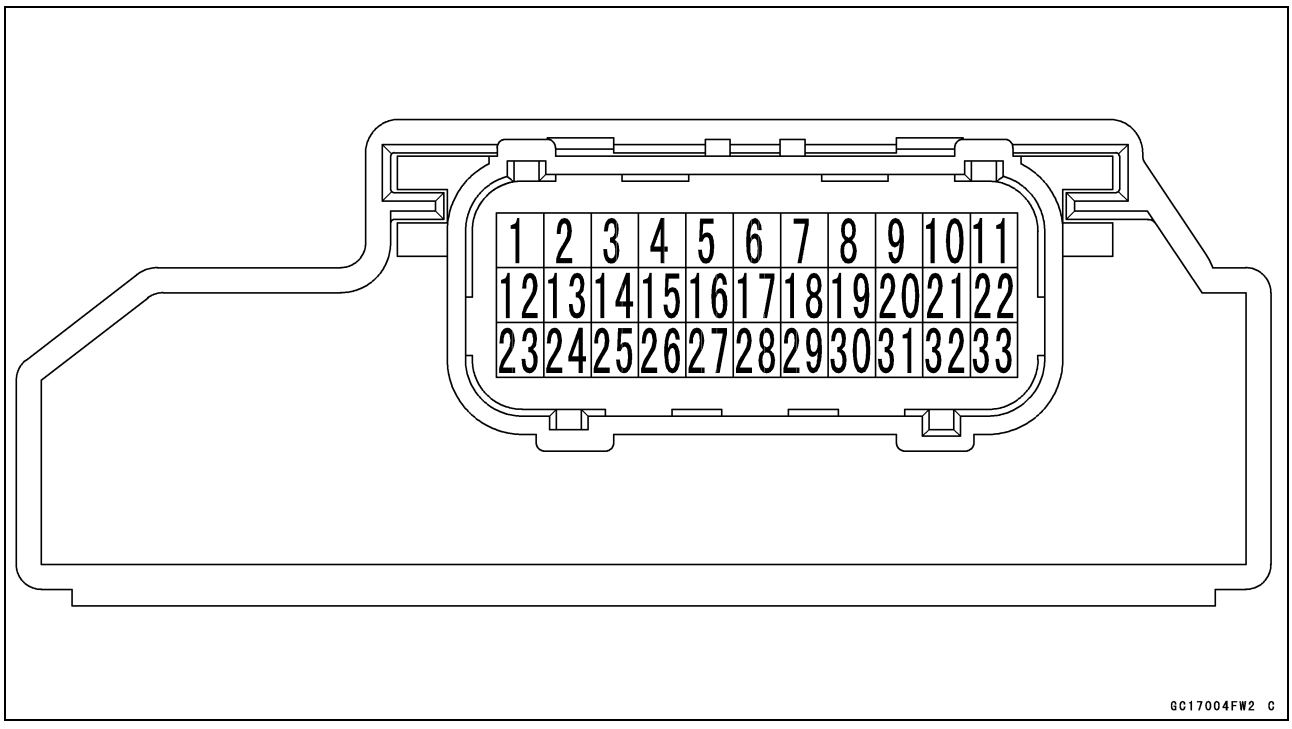

Terminal Names

1. Power Supply to ECU
2. Unused
3. DFI Setting Data Selection 1
4. Fuel Injector
5. Unused
6. Ground for ECU
7. Orange Launch Control Mode/FI Warning Indicator Light (LED)
8. Unused
9. Unused
10. Fuel Pump
11. Ignition Coil
12. Power Supply to Sensors
13. External Communication Line
14. External Communication Line
15. Throttle Sensor
16. Vehicle-down Sensor
17. Ground for Sensors
18. Unused
19. Intake Air Temperature Sensor
20. Unused
21. Water Temperature Sensor
22. Ground for ECU
23. Crankshaft Sensor (–)
24. Crankshaft Sensor (+)
25. Unused
26. External Communication Line (*KDS)
27. Intake Air Pressure Sensor
28. Gear Position Switch
29. DFI Setting Data Selection 2
30. Engine Stop Switch
31. Launch Control Mode Button
32. Self-diagnosis Terminal
33. Ground for Control System

*: KDS (Kawasaki Diagnostic System)

DFI Parts Location

Kawasaki Diagnostic System Connector [A]
ECU [B]
Self-diagnosis Terminal [C]

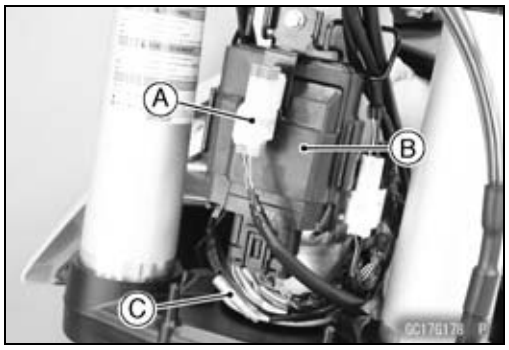

Orange Launch Control Mode/FI Warning Indicator Light (LED) [A]

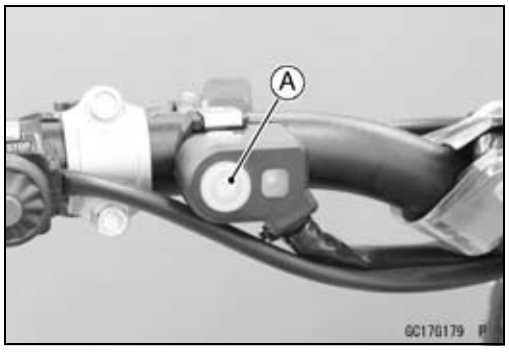

Water Temperature Sensor [A]

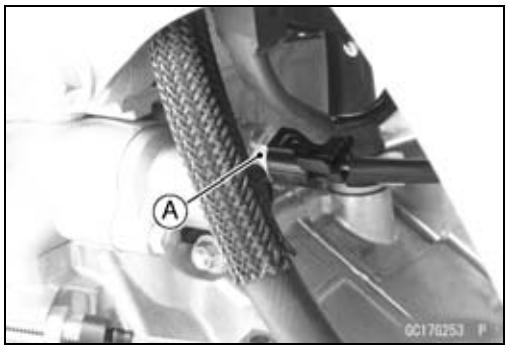

Crankshaft Sensor [A]

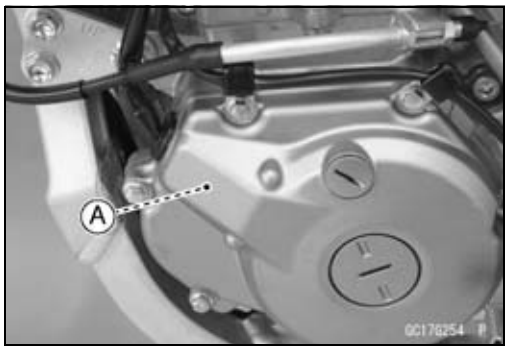

Vehicle-down Sensor [A]
Capacitor [B]
Ignition Coil [C]

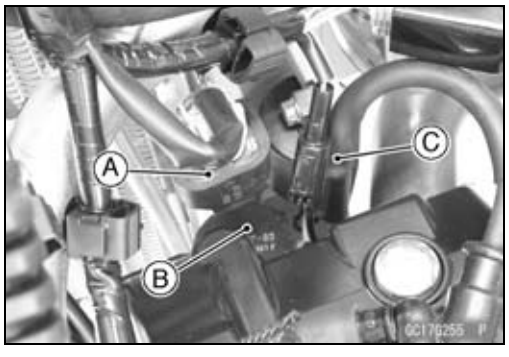

DFI Parts Location

Intake Air Pressure Sensor [A]
Fuel Pump [B]

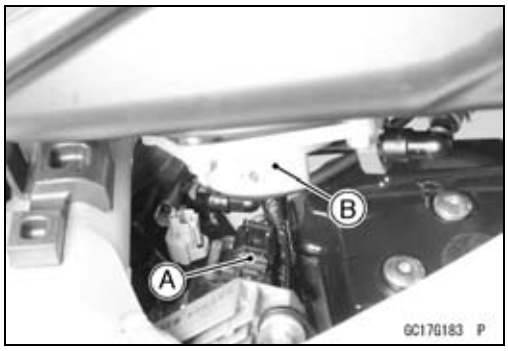

Fuel Injector [A]
Throttle Sensor [B]
Throttle Body Assy [C]

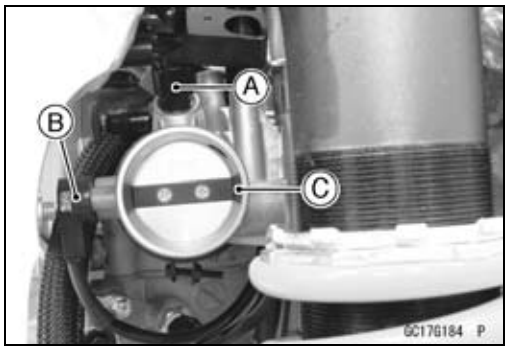

Intake Air Temperature Sensor [A]

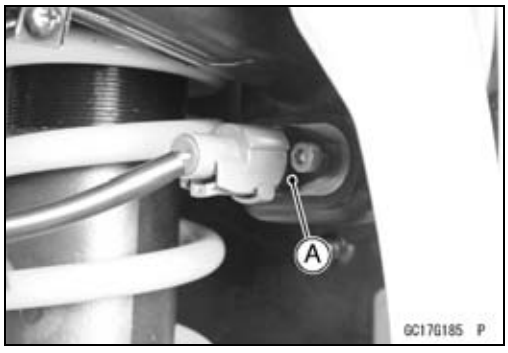

DFI Servicing Precautions

There are a number of important precautions that should be followed servicing the DFI system.

○Connect these connectors until they click [A].
○Never any of the DFI electrical connectors are disconnected. The ECU memorizes service codes.

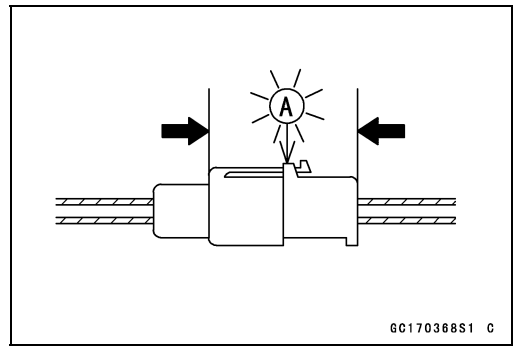

○Do not spray water on the electrical parts, DFI parts, connectors, leads and wiring.
○When the fuel hose is disconnected, do not start the engine. The fuel pump will operate and fuel will spout from the fuel hose.
○Do not operate the fuel pump if it is completely dry. This is to prevent pump seizure.
○Before removing the fuel system parts, blow the outer surfaces of these parts clean with compressed air.
○When the fuel hose is disconnected, fuel may spout out by residual pressure in the fuel line. Cover the hose joint with a piece of clean cloth to prevent fuel spillage.
○When installing the fuel hose, avoid sharp bending, kinking, flattening or twisting, and run the fuel hose with a minimum of bending so that the fuel flow will not be obstructed.
○Run the hose according to the Cable, Wire, and Hose Routing section in the Appendix chapter.
○To prevent corrosion and deposition in the fuel system, do not add any fuel antifreeze chemicals to fuel.

○If the motorcycle is not properly handled, the high pressure inside the fuel line can cause fuel to leak or the hose to burst. Remove the fuel tank (see Fuel Tank Removal) and check the fuel hose [A].
★Replace the fuel hose if any fraying, cracks or bulges are noticed.

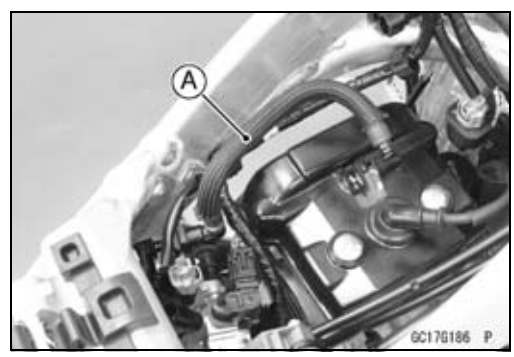

○To maintain the correct fuel/air mixture (F/A), there must be no intake air leaks in the DFI system. Be sure to install the oil filler plug [A] after filling the engine oil.

Special Tool - Filler Cap Driver: 57001-1454

Torque - Oil Filler Plug: 3.5 N·m (0.36 kgf·m, 31 in·lb)

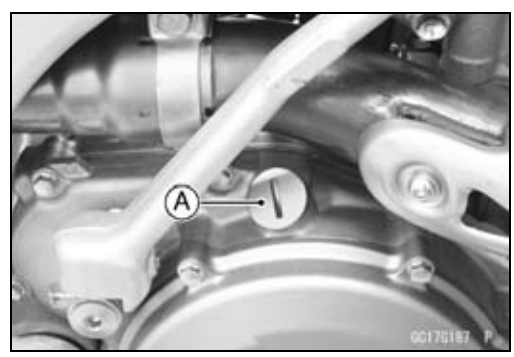

Troubleshooting the DFI System

Outline

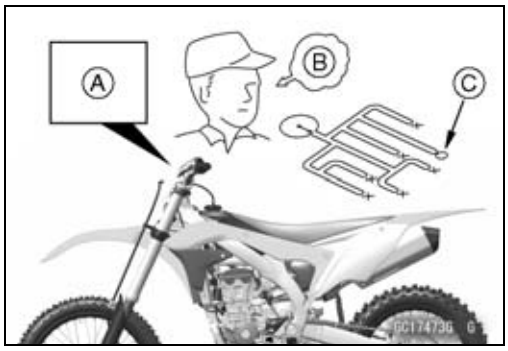

When an abnormality in the system occurs, the orange FI warning indicator light (LED) goes on to alert the rider. In addition, the condition of the problem is stored in the memory of the ECU (Electronic Control Unit). With the engine stopped and turned in the self-diagnosis mode, the service code [A] is indicated by the number of times the orange FI warning indicator light (LED) blinks.

When due to a malfunction, the orange FI warning indicator light (LED) remains lit, ask the rider about the conditions [B] under which the problem occurred and try to determine the cause [C].

- First, conduct a self-diagnosis inspection and then a non-self-diagnosis inspection. The non-self-diagnosis items are not indicated by the orange FI warning indicator light (LED). Don't rely solely on the DFI self-diagnosis function, use common sense.

★ If the orange FI warning indicator light (LED) goes on by kicking the kick pedal about 10 times, these parts are broken.

Even when the DFI system is operating normally, the orange FI warning indicator light (LED) may light up under strong electrical interference. No repair needed.

When the orange FI warning indicator light (LED) goes on and the motorcycle is brought in for repair, check the service codes.

When the repair has been done, the light doesn't go on. But the service codes stored in memory are not erased to preserve the problem history, and the light can display the codes in the self-diagnosis mode. The problem history is referred when solving unstable problems.

Much of the DFI system troubleshooting work consists of confirming continuity of the wiring. The DFI parts are assembled and adjusted with precision, and it is impossible to disassemble or repair them.

Troubleshooting the DFI System

- When checking the DFI parts, use a digital meter which can be read two decimal place voltage or resistance.

○The DFI part connectors [A] have seals [B], including the ECU. When measuring the input or output voltage with the connector joined, use the needle adapter set [C]. Insert the needle adapter inside the seal until the needle adapter reaches the terminal.

Special Tool - Needle Adapter Set: 57001-1457

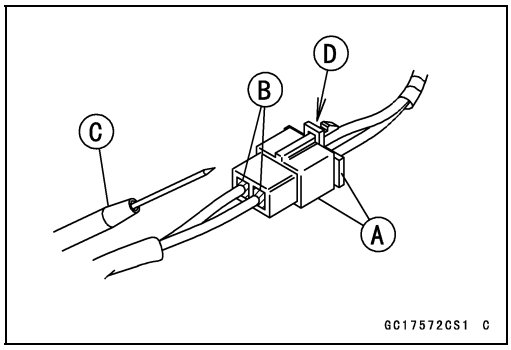

NOTICE
Insert the needle adapter straight along the terminal in the connector to prevent short-circuit between terminals.

- Make sure that measuring points are correct in the connector, noting the position of the lock [D] and the lead color before measurement. Do not reverse connections of a digital meter.
- Be careful not to short-circuit the leads of the DFI or electrical system parts by contact between adapters.
- Connect the power supply harness (option P/No. 26011 -0246) and the battery to the capacitor lead connector, and measure the voltage with the connector joined.

NOTICE
Incorrect, reverse connection or short circuit by needle adapters could damage the DFI or electrical system parts.

○After measurement, remove the needle adapters and apply sealant to the seals [A] of the connector [B] for waterproofing.

Sealant - Liquid Gasket, TB1211: 56019-120

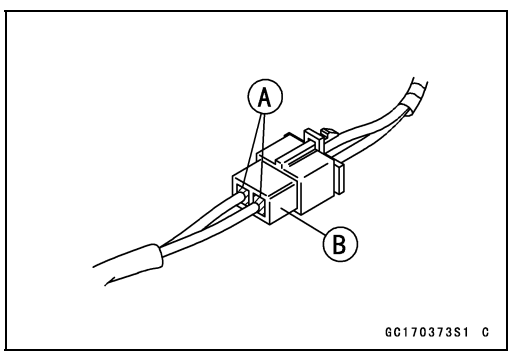

- Always check the connected battery condition before replacing the DFI parts. A fully charged battery is a must for conducting accurate tests of the DFI system.
- Trouble may involve one or in some cases all items. Never replace a defective part without determining what CAUSED the problem. If the problem was caused by some other item or items, they too must be repaired or replaced, or the new replacement part will soon fail again.
- Measure coil winding resistance when the DFI part is cold (at room temperature).
- Make sure all connectors in the circuit are clean and tight, and examine leads for signs of burning, fraying, short, etc. Deteriorated leads and bad connections can cause reappearance of problems and unstable operation of the DFI system.

★If any wiring is deteriorated, replace the wiring.

Troubleshooting the DFI System

- Pull each connectors [A] apart and inspect it for corrosion, dirt, and damage.

★If the connector is corroded or dirty, clean it carefully. If it is damaged, replace it. Connect them securely.

- Check the wiring for continuity.

○Use the wiring diagram to find the ends of the lead which is suspected of being a problem.

○Connect a digital meter between the ends of the leads.

○Set the digital meter, and read the digital meter.

★If the tester does not read 0 Ω, the lead is defective. Replace the lead or the main harness.

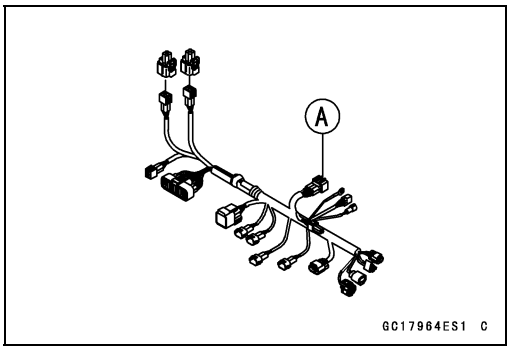

○If both ends of a harness [A] are far apart, ground [B] the one end [C], using a jumper lead [D] and check the continuity between the end [E] and the ground [F]. This enables to check a long harness for continuity. If the harness is open, repair or replace the harness.

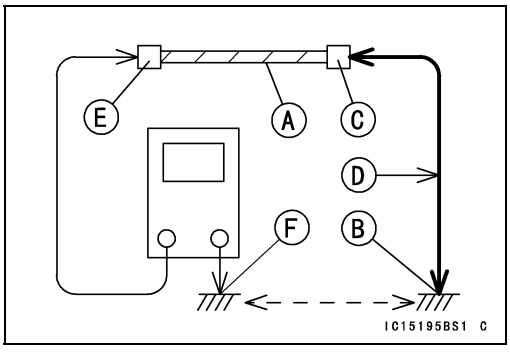

○When checking a harness [A] for short circuit, open one end [B] and check the continuity between the other end [C] and ground [D]. If there is continuity, the harness has a short circuit to ground, and it must be repaired or replaced.

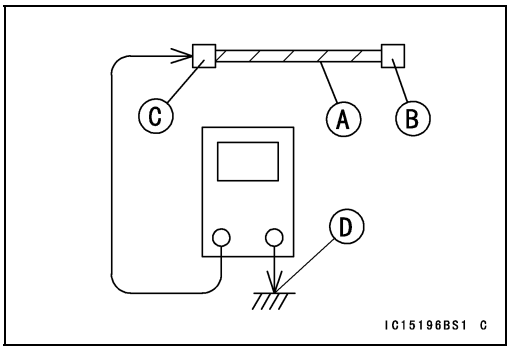

- Narrow down suspicious locations by repeating the continuity tests from the ECU connectors.

★If no abnormality is found in the wiring or connectors, the DFI parts are the next likely suspects. Check the part, starting with input and output voltages. However, there is no way to check the ECU itself.

★If an abnormality is found, replace the affected DFI part.

★If no abnormality is found in the wiring, connectors, and DFI parts, replace the ECU.

Troubleshooting the DFI System

DFI Diagnosis Flow Chart

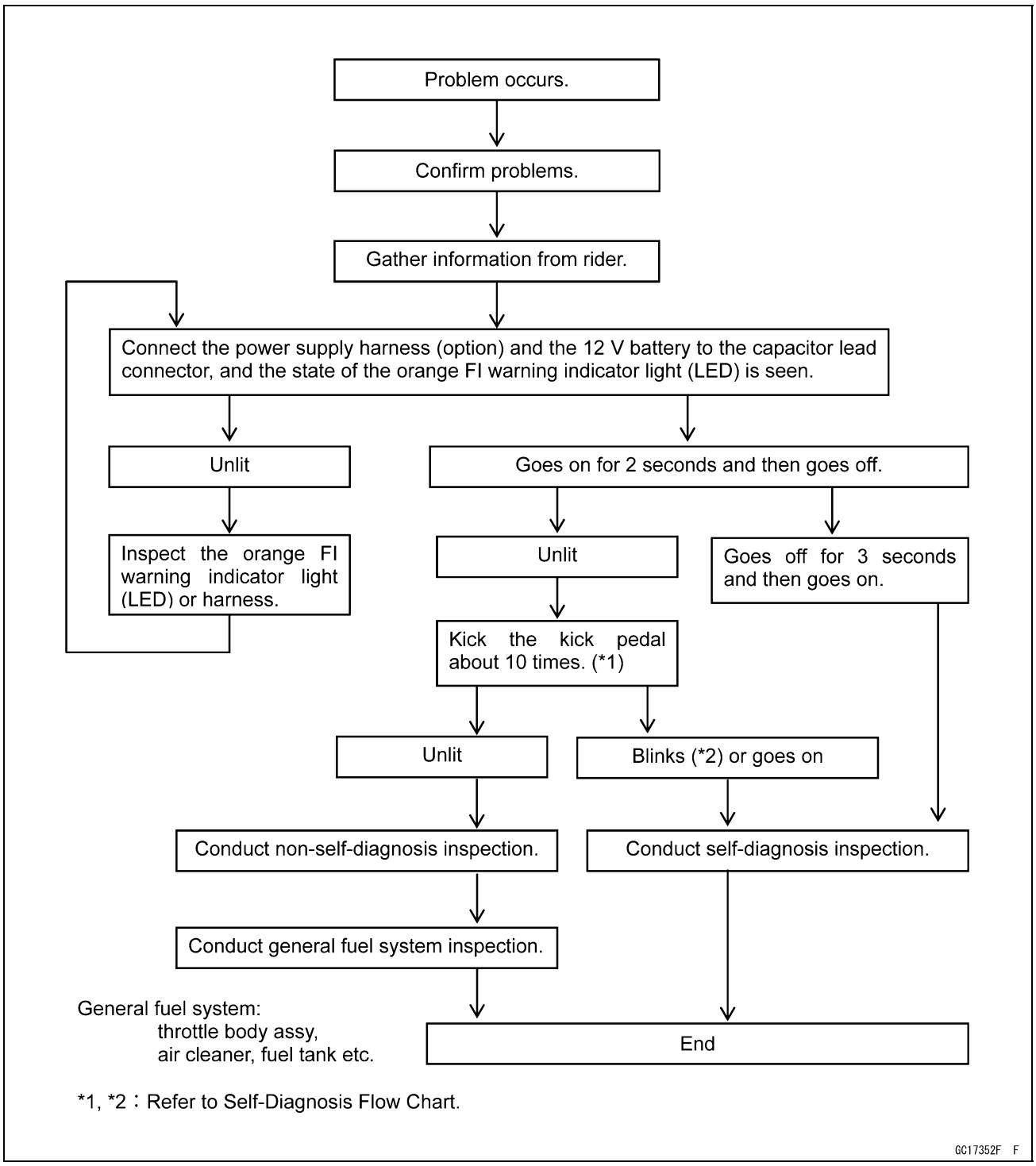

Inquiries to Rider

○Each rider reacts to problems in different ways, so it is important to confirm what kind of symptoms the rider has encountered.

○Try to find out exactly what problem occurred under exactly what conditions by asking the rider; knowing this information may help you reproduce the problem.

○The following sample diagnosis sheet will help prevent you from overlooking any areas, and will help you decide if it is a DFI system problem, or a general engine problem.

Troubleshooting the DFI System

Sample Diagnosis Sheet

Rider name		**Model**
Engine No.		**Frame No.**
Date problem occurred		
Environment when problem occurred.		
Weather	☐ fine, ☐ cloudy, ☐ rain, ☐ snow, ☐ always, ☐ other:	
Temperature	☐ hot, ☐ warm, ☐ cold, ☐ very cold, ☐ always	
Problem frequency	☐ chronic, ☐ often, ☐ once	
Altitude	☐ normal, ☐ high (about 1 000 m or more)	
Motorcycle conditions when problem occurred.		
Orange FI warning indicator light (LED)	☐ lights up immediately after starting the engine, and goes off after 2 seconds (with engine running) (normal).	
	☐ lights up for 2 seconds immediately after starting the engine, and goes off for 3 seconds, and then keeps going on. (with engine running) (DFI problem)	
	☐ unlights (light, ECU or its wiring fault).	
	☐ sometimes lights up (probably wiring fault).	
Starting difficulty	☐ no cranking.	☐ no spark.
	☐ no fuel flow (☐ no fuel in tank, ☐ no fuel pump sound).	
	☐ engine flooded (do not crank engine with throttle opened, which promotes engine flooding).	
	☐ other:	
Engine stops	☐ right after starting.	☐ when moving off.
	☐ when opening throttle grip.	☐ when stopping the motorcycle.
	☐ when closing throttle grip.	☐ when cruising.
	☐ other:	
Poor running at low speed	☐ very low fast idle speed.	
	☐ very low idle speed, ☐ very high idle speed, ☐ rough idle speed.	
	☐ spark plug loose (tighten it).	
	☐ spark plug dirty, broken, or gap maladjusted (adjust it).	
	☐ backfiring.	☐ afterfiring.
	☐ hesitation when acceleration.	☐ engine oil viscosity too high.
	☐ brake dragging.	☐ clutch slipping.
	☐ engine overheating.	
	☐ other:	
Poor running or no power at high speed	☐ spark plug loose (tighten it).	☐ spark plug incorrect (replace it).
	☐ spark plug dirty, broken, or gap maladjusted (remedy it).	
	☐ knocking (fuel poor quality or incorrect).	☐ engine overheating.
	☐ brake dragging.	☐ engine oil level too high.
	☐ clutch slipping.	☐ engine oil viscosity too high.
	☐ other:	

DFI System Troubleshooting Guide

NOTE

○*This is not an exhaustive list, giving every possible cause for each problem listed. It is meant simply as a rough guide to assist the troubleshooting for some of the more common difficulties in DFI system.*

○*The ECU may be involved in the DFI electrical and ignition system troubles. If these parts and circuits are checked out good, be sure to check the ECU for ground and power supply. If the ground and power supply are checked good, replace the ECU.*

Engine Won't Turn Over

Symptoms or Possible Causes	Actions (chapter)
Gear position switch trouble	Inspect (see chapter 3).
Vehicle-down sensor OFF	Reinstall (see chapter 3).
Crankshaft sensor trouble	Inspect (see chapter 16).
Ignition coil shorted or not in good contact	Inspect or Reinstall (see chapter 16).
Ignition coil trouble	Inspect (see chapter 16).
Spark plug dirty, broken or gap maladjusted	Inspect and replace (see chapter 2).
Spark plug incorrect	Replace it with correct plug (see chapter 2).
ECU ground and power supply trouble	Inspect (see chapter 3).
ECU trouble	Inspect (see chapter 3, 16).
No or little fuel in tank	Supply fuel (see Owner's Manual).
Fuel Injector trouble	Inspect and replace (see chapter 3).
Fuel pump not operating	Inspect (see chapter 3).
Fuel filter or pump screen clogged	Inspect and replace fuel pump (see chapter 3).
Fuel pressure regulator trouble	Inspect fuel pressure and replace fuel pump (see chapter 3).
Fuel line clogged	Inspect and repair (see chapter 3).

Poor Running at Low Speed

Symptoms or Possible Causes	Actions (chapter)
Spark weak:	
Ignition coil shorted or not in good contact	Inspect or Reinstall (see chapter 16).
Ignition coil trouble	Inspect (see chapter 16).
Spark plug dirty, broken or gap maladjusted	Inspect and replace (see chapter 2).
Spark plug incorrect	Replace it with correct plug (see chapter 2).
ECU trouble	Inspect (see chapter 3, 16).
Fuel/air mixture incorrect:	
Little fuel in tank	Supply fuel (see Owner's Manual).
Air cleaner clogged, poorly sealed, or missing	Clean element or inspect sealing (see chapter 3).
Air cleaner duct loose	Reinstall (see chapter 3).
Throttle body assy holder loose	Reinstall (see chapter 3).
Fuel injector dust seal damage	Replace (see chapter 3).
Fuel injector O-ring damage	Replace (see chapter 3).
Fuel filter or pump screen clogged	Inspect and replace fuel pump (see chapter 3).
Fuel pressure regulator trouble	Inspect fuel pressure and replace fuel pump (see chapter 3).
Fuel line clogged	Inspect and repair (see chapter 3).
Intake air pressure sensor trouble	Inspect (see chapter 3).

DFI System Troubleshooting Guide

Symptoms or Possible Causes	Actions (chapter)
Water temperature sensor trouble	Inspect (see chapter 3).
Intake air temperature sensor trouble	Inspect (see chapter 3).
Throttle sensor trouble	Inspect (see chapter 3).
Unstable (rough) idling:	
Fuel pressure too low or too high	Inspect (see chapter 3).
Fuel injector trouble	Inspect (see chapter 3).
Throttle sensor trouble	Inspect (see chapter 3).
Intake air pressure sensor trouble	Inspect (see chapter 3).
Water temperature sensor trouble	Inspect (see chapter 3).
Intake air temperature sensor trouble	Inspect (see chapter 3).
Engine stalls easily:	
Spark plug dirty, broken or gap maladjusted	Inspect and replace (see chapter 2).
Ignition coil trouble	Inspect (see chapter 16).
Throttle sensor trouble	Inspect (see chapter 3).
Intake air pressure sensor trouble	Inspect (see chapter 3).
Water temperature sensor trouble	Inspect (see chapter 3).
Intake air temperature sensor trouble	Inspect (see chapter 3).
Fuel pump trouble	Inspect (see chapter 3).
Fuel injector trouble	Inspect (see chapter 3).
Fuel pressure too low or too high	Inspect (see chapter 3).
Fuel pressure regulator trouble	Inspect fuel pressure and replace fuel pump (see chapter 3).
Fuel line clogged	Inspect and repair (see chapter 3).
Poor acceleration:	
Fuel pressure too low	Inspect (see chapter 3).
Water or foreign matter in fuel	Change fuel. Inspect and clean fuel system (see chapter 3).
Fuel filter or pump screen clogged	Inspect and replace fuel pump (see chapter 3).
Fuel pump trouble	Inspect (see chapter 3).
Fuel injector trouble	Inspect (see chapter 3).
Throttle sensor trouble	Inspect (see chapter 3).
Intake air pressure sensor trouble	Inspect (see chapter 3).
Water temperature sensor trouble	Inspect (see chapter 3).
Intake air temperature sensor trouble	Inspect (see chapter 3).
Spark plug dirty, broken or gap maladjusted	Inspect and replace (see chapter 2).
Ignition coil trouble	Inspect (see chapter 16).
Stumble:	
Fuel pressure too low	Inspect (see chapter 3).
Fuel injector trouble	Inspect (see chapter 3).
Throttle sensor trouble	Inspect (see chapter 3).
Intake air pressure sensor trouble	Inspect (see chapter 3).
Water temperature sensor trouble	Inspect (see chapter 3).
Intake air temperature sensor trouble	Inspect (see chapter 3).

DFI System Troubleshooting Guide

Symptoms or Possible Causes	Actions (chapter)
Surge:	
Unstable fuel pressure	Fuel pressure regulator trouble (Inspect and replace fuel pump) or kinked fuel line (Inspect and replace fuel pump) (see chapter 3).
Fuel injector trouble	Inspect (see chapter 3).
Water temperature sensor trouble	Inspect (see chapter 3).
Backfiring when deceleration:	
Spark plug dirty, broken or gap maladjusted	Inspect and replace (see chapter 16).
Fuel pressure too low	Inspect (see chapter 3).
Fuel pump trouble	Inspect (see chapter 3).
Throttle sensor trouble	Inspect (see chapter 3).
Intake air pressure sensor trouble	Inspect (see chapter 3).
Water temperature sensor trouble	Inspect (see chapter 3).
Intake air temperature sensor trouble	Inspect (see chapter 3).
After fire:	
Spark plug burned or gap maladjusted	Replace (see chapter 16).
Fuel injector trouble	Inspect (see chapter 3).
Intake air pressure sensor trouble	Inspect (see chapter 3).
Water temperature sensor trouble	Inspect (see chapter 3).
Intake air temperature sensor trouble	Inspect (see chapter 3).
Other:	
Intermittent any DFI fault and its recovery	Check that DFI connectors are clean and tight, and examine leads for signs of burning or fraying (see chapter 3).

Poor Running or No Power at High Speed

Symptoms or Possible Causes	Actions (chapter)
Firing incorrect:	
Ignition coil shorted or not in good contact	Inspect or Reinstall (see chapter 16).
Ignition coil trouble	Inspect (see chapter 16).
Spark plug dirty, broken or gap maladjusted	Inspect and replace (see chapter 2).
Spark plug incorrect	Replace it with correct plug (see chapter 2).
ECU trouble	Inspect (see chapter 3, 16).
Fuel/air mixture incorrect:	
Air cleaner clogged, poorly sealed, or missing	Clean element or inspect sealing (see chapter 3).
Air cleaner housing loose	Reinstall (see chapter 3).
Throttle body assy holder loose	Reinstall (see chapter 3).
Fuel injector dust seal damage	Replace (see chapter 3).
Water or foreign matter in fuel	Change fuel. Inspect and clean fuel system (see chapter 3).
Fuel injector O-ring damage	Replace (see chapter 3).
Fuel injector clogged	Inspect and repair (see chapter 3).
Fuel line clogged	Inspect and repair (see chapter 3).
Fuel pump trouble	Inspect (see chapter 3).
Intake air pressure sensor trouble	Inspect (see chapter 3).

DFI System Troubleshooting Guide

Symptoms or Possible Causes	Actions (chapter)
Water temperature sensor trouble	Inspect (see chapter 3).
Intake air temperature sensor trouble	Inspect (see chapter 3).
Throttle sensor trouble	Inspect (see chapter 3).
Knocking:	
Fuel poor quality or incorrect	Fuel change (Use gasoline recommended in the Owner's Manual).
Spark plug incorrect	Replace it with correct plug (see chapter 2).
Ignition coil trouble	Inspect (see chapter 16).
ECU trouble	Inspect (see chapter 3, 16).
Intake air pressure sensor trouble	Inspect (see chapter 3).
Water temperature sensor trouble	Inspect (see chapter 3).
Intake air temperature sensor trouble	Inspect (see chapter 3).
Miscellaneous:	
Throttle valve will not fully open	Inspect throttle cables and lever linkage (see chapter 3).
Engine overheating - Water temperature sensor or crankshaft sensor trouble	(see Overheating of Troubleshooting Guide in chapter 17)
Exhaust Smokes Excessively:	
(Black smokes)	
Air cleaner element clogged	Clean element (see chapter 3).
Fuel pressure too high	Inspect (see chapter 3).
Fuel injector trouble	Inspect (see chapter 3).
Water temperature sensor trouble	Inspect (see chapter 3).
Intake air temperature sensor trouble	Inspect (see chapter 3).
(Brown smoke)	
Air cleaner housing loose	Reinstall (see chapter 3).
Fuel pressure too low	Inspect (see chapter 3).
Water temperature sensor trouble	Inspect (see chapter 3).
Intake air temperature sensor trouble	Inspect (see chapter 3).

Self-Diagnosis

Self-diagnosis Outline

The self-diagnosis system has three modes and can be switched to another mode by grounding the self-diagnosis terminal.

User Mode

The ECU connected orange FI warning indicator light (LED) goes on when DFI system and ignition system parts are faulty. In case of serious troubles, the ECU stops the injection/ignition operation.

Dealer Mode 1

The orange FI warning indicator light (LED) emits service code(s) to show the problem(s) which the DFI system, and ignition system has at the moment of diagnosis.

Dealer Mode 2

The orange FI warning indicator light (LED) emits service code(s) to show the problem(s) which the DFI system, and ignition system had in the past.

Self-diagnosis Procedures

- Disconnect the capacitor lead connector (green) [A].

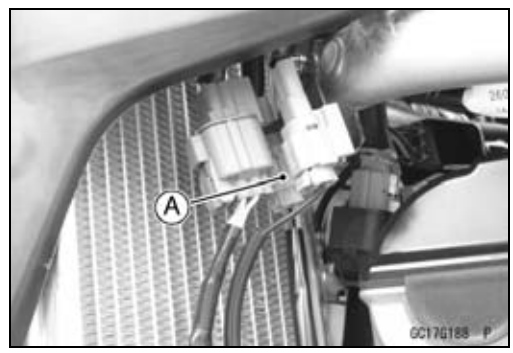

- Connect the power supply harness (option P/No. 26011 -0246) [A] to the capacitor lead connector [B] of the main harness.
- Connect the power supply harness (option P/No. 26011 -0246) to the 12 V battery [C] as shown.
- The orange FI warning indicator light (LED) will go on for 2 seconds for bulb inspection when the ECU activates.

★If the orange FI warning indicator light (LED) does not go on, inspect the orange FI warning indicator light (LED) (see Orange FI Warning Indicator Light (LED) Inspection).

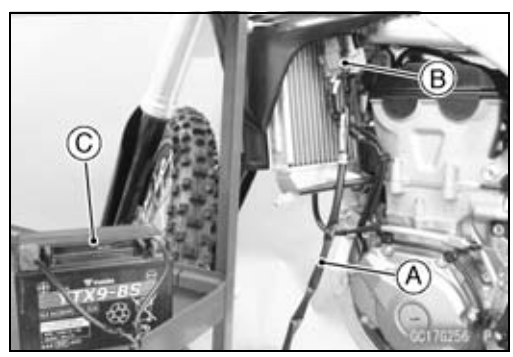

NOTE

○*Use a fully charged battery when conducting self-diagnosis. Otherwise, the light blinks very slowly or doesn't blink.*

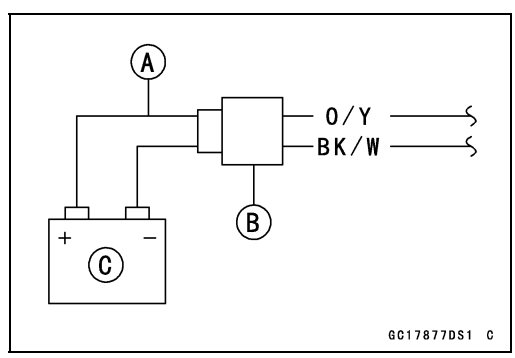

Self-Diagnosis

- Disconnect the self-diagnosis terminal [A] from the cover [B].
- Connect an auxiliary lead [C] for grounding to the self -diagnosis terminal.

NOTE

○*Keep the self-diagnosis terminal grounded during self -diagnosis.*

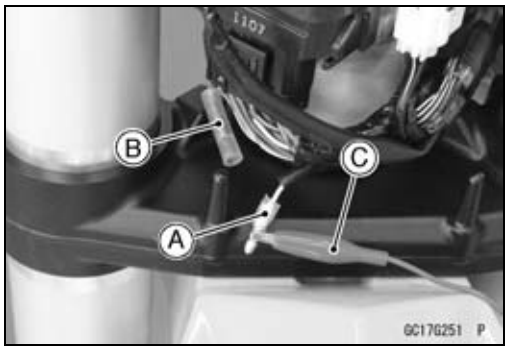

- To enter the self-diagnosis dealer mode 1, ground the self -diagnosis terminal [A] for more than 2 seconds [B], and then keep it grounded continuously [C].
  Ground [D]
  Open [E]
- Count the blinks of the light to read the service code.

○Keep the terminal ground until you finish reading the service code.

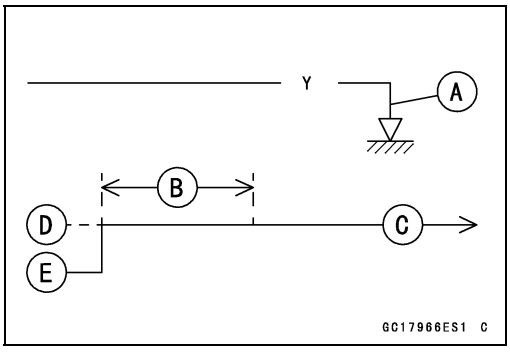

- To enter the self-diagnosis dealer mode 2, ground the self-diagnosis terminal [A] and open it, and then ground the self-diagnosis terminal more than 3 times within 3 seconds [B], and then keep it grounded continuously [C].
  Ground [D]
  Open [E]
- Count the blinks of the light to read the service code.

○Keep the terminal ground until you finish reading the service code.

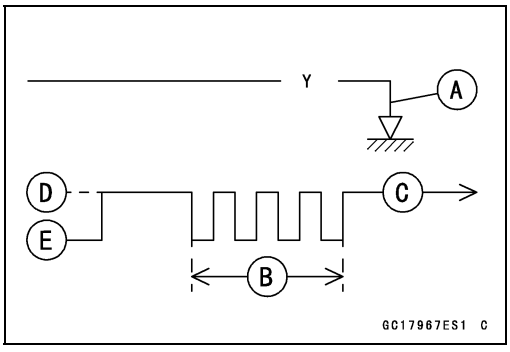

Self-Diagnosis

Self-Diagnosis Flow Chart

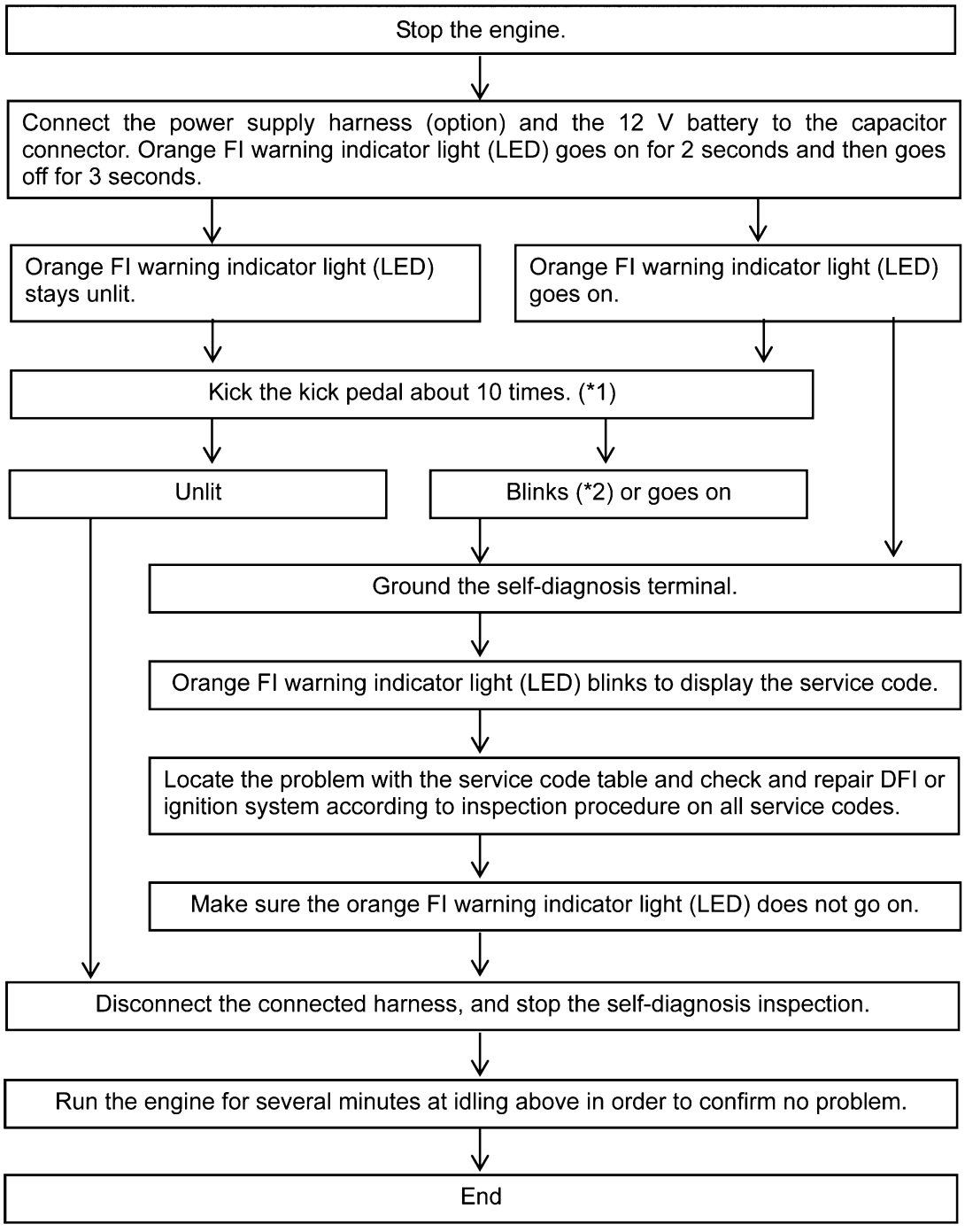

*1: When the engine is rotated, there are parts (crankshaft sensor, fuel injector and ignition coil) by which ECU recognizes the fault. Kick for that.

*2: The blink (0.16 seconds cycle) is warning of impossible starting. The warning of impossible starting displays when connecting the battery and kicked. The starting becomes impossible when the crankshaft sensor, fuel injector, ignition coil, fuel pump and vehicle-down sensor are fault.

GC17353F F

Self-Diagnosis

How to Read Service Codes

○Service codes are shown by a series of long and short blinks of the orange FI warning indicator light (LED) as shown below.

○Read 10th digit and unit digit as the orange FI warning indicator light (LED) blinks.

○When there are a number of problems, all the service codes can be stored and the display will begin starting from the lowest number service code in the numerical order. Then after completing all codes, the display is repeated until the self-diagnosis terminal is open.

○If there is no problem no code and the orange FI warning indicator light (LED) blinks with cycle of 0.5 seconds.

○For example, if two problems occurred in the order of 21, 12, the service codes are displayed from the lowest number in the order listed.

(12 → 21) → (12 → 21) → · · · (repeated)

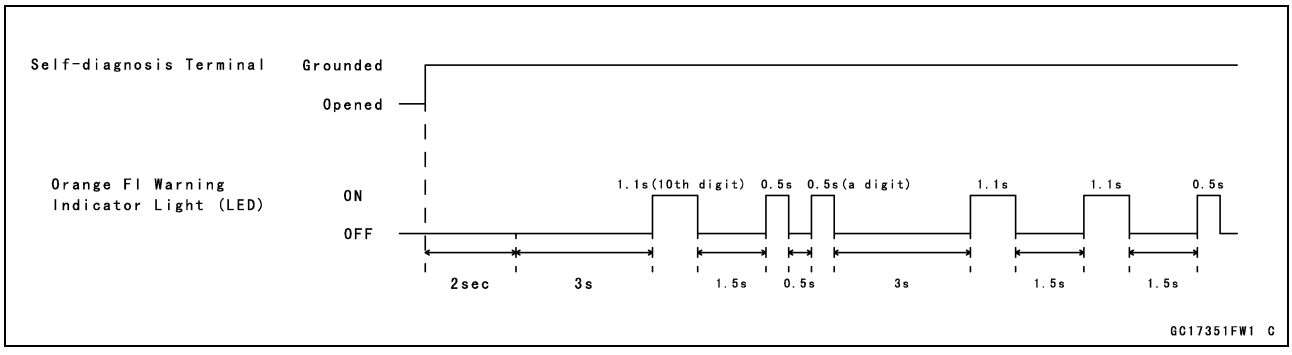

○If the problem is with the following parts, the ECU cannot memorize these problems, the orange FI warning indicator light (LED) doesn't go on, and no service codes can be displayed.

ECU Power Source Wiring and Ground Wiring (see ECU Power Supply Inspection)

How to Erase Service Codes

○Even if the battery or the ECU are disconnected, or the problem is solved, all service codes remain in the ECU.

○The service codes stored in memory of the ECU cam be erased using Kawasaki Diagnostic System (KDS Ver.3).

Self-Diagnosis

Service Code Table

Service Codes	Orange FI Warning Indicator Light (LED)	Problems
11	ON OFF	Throttle sensor malfunction, wiring open or short
12		Intake air pressure sensor malfunction, wiring open or short
13		Intake air temperature sensor malfunction, wiring open or short
14		Water temperature sensor malfunction, wiring open or short
21		Crankshaft sensor malfunction, wiring open or short
25		Gear position switch malfunction, wiring open or short
31		Vehicle-down sensor malfunction, wiring open or short
41		Fuel injector malfunction, wiring open or short
46		Fuel pump malfunction, wiring open or short
51		Ignition coil malfunction, wiring open or short

Notes:

○The ECU may be involved in these problems. If all the parts and circuits checked out good, be sure to check the ECU for ground and power supply. If the ground and power supply are checked good, replace the ECU.

○When no service code is displayed, the electrical parts of the DFI system has no fault, and the mechanical parts of the DFI system and the engine are suspect.

Self-Diagnosis

Backups

○The ECU takes the following measures to prevent engine damage when the DFI or the ignition system parts have troubles.

Service Codes	Parts	Output Signal Usable Range or Criteria	Backups by ECU
11	Throttle Sensor	Throttle Sensor Output Voltage 0.391 ~ 4.512 V	If the throttle sensor system fails (the signal is out of the usable range, wiring short or open), the ECU locks ignition timing into the closed throttle position and sets the DFI in the D-J method (1). Also, the throttle sensor system and intake air pressure fails, the ECU locks ignition timing into the closed throttle position and sets the DFI in the α-N method (2).
12	Intake Air Pressure Sensor	Intake Air Pressure Output Voltage 0.352 ~ 4.824 V	If the intake air pressure sensor system fails (the signal is out of the usable range, wiring short or open), the ECU sets the DFI in the α - N method. Conduct ignition and injection operations whenever crank rotates by 360 degrees.
13	Intake Air Temperature Sensor	Intake Air Temperature Output Voltage 0.117 ~ 4.922 V	ECU sets the intake air temperature at 26°C.
14	Water Temperature Sensor	Water Temperature Output Voltage 0.195 ~ 4.902 V	ECU sets the water temperature at 80°C.
21	Crankshaft Sensor	Crankshaft sensor must send 18 signals (output signal) to the ECU at the one cranking.	If the crankshaft sensor generates other than 18 signals, the engine stops by itself.
25	Gear Position Switch	Gear Position Sensor Output Voltage 0.469 ~ 4.727 V	If the gear position switch fails, the ECU sets the low (1st) gear position.
31	Vehicle-down Sensor	Vehicle-down Sensor Output Voltage 0.371 ~ 4.395 V	If the vehicle-down sensor system fails, the ECU shuts off the fuel system and the ignition system. ECU does not backup.
41	Fuel Injector	In succession pulse is input to ECU.	If the injector break down, wiring short or open, the ECU stops the signal input to injector and the fuel delivery to cylinder is stopped.
46	Fuel Pump	Supply Voltage 6 ~ 15 V	If the pump fails, wiring short or open, the ECU stops the pump operations.
51	Ignition Coil	Send signals (output voltage) continuously to the ECU.	If the ignition coil fails, the ECU shuts off the signal to the ignition coil.

Note:

(1) D-J Method: The DFI control method from medium to heavy engine load. When the engine load is light like at idling or low speed, the ECU determines the injection quantity by calculating from the throttle vacuum (intake air pressure sensor output voltage) and engine speed (crankshaft sensor output voltage). This method is called D-J method.

(2) α-N Method: As the engine speed increases, and the engine load turns middle to heavy, the ECU determines the injection quantity by calculating from the throttle opening (main throttle sensor output voltage) and the engine speed. This method is called α-N method.

Throttle Sensor (Service Code 11)

The throttle sensor is a rotating variable resistor that change output voltage according to throttle operating. The ECU senses this voltage change and determines fuel injection quantity, and ignition timing according to engine rpm, and throttle opening.

Input Terminal [A]
Output Terminal [B]
Ground Terminal [C]

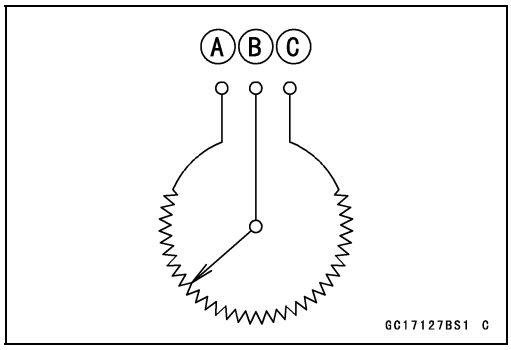

Throttle Sensor Replacement

NOTICE
Never drop the throttle sensor [A], especially on a hard surface. Such a shock to the throttle sensor can damage it.

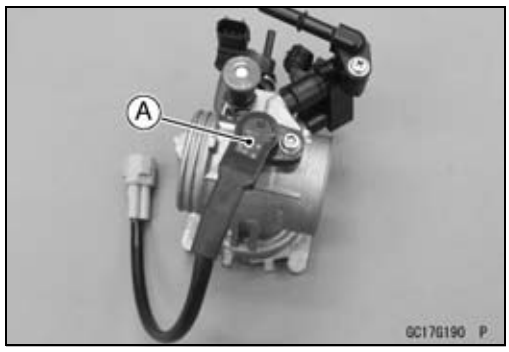

NOTE

○*These procedures are explained on the assumption that the intake and exhaust systems of the engine are in good condition.*

○*When adjusting the throttle sensor, use a digital voltage meter which can be read the third decimal place. The DC voltage accuracy must be less than ±0.05% reading and ±4 digits at DC 1 V.*

○*Read the manufacture's instructions thoroughly before using the meter, incorrect values may cause improper adjustments.*

- Remove the throttle body assy (see Throttle Body Assy Removal).

- Check the paint on the stop screw [A] and make sure that the stop screw has not been adjusted. If stop screw has been adjusted, throttle body assy has to be replaced. Don't tamper with stop screw.

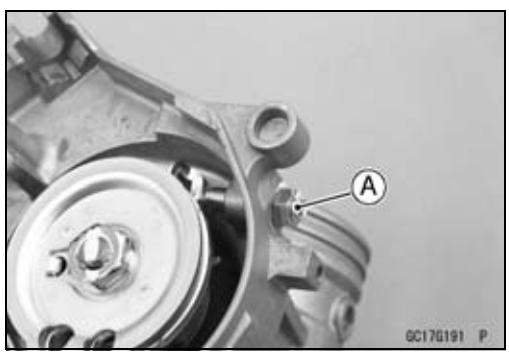

- Remove:
  Throttle Sensor Mounting Screw [A]
  Throttle Sensor [B]

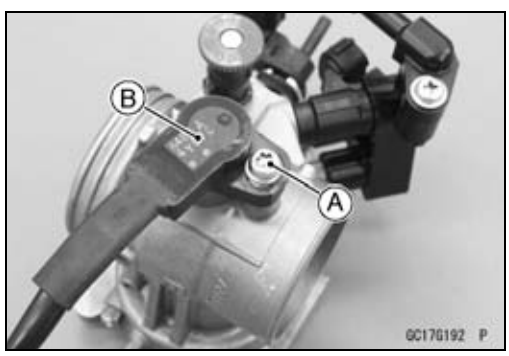

Throttle Sensor (Service Code 11)

- Replace:
  Throttle Sensor Mounting Screw [A]
  Throttle Sensor [B]
  O-ring [C]
- Apply engine oil to the new O-ring, and install it to the new throttle sensor.

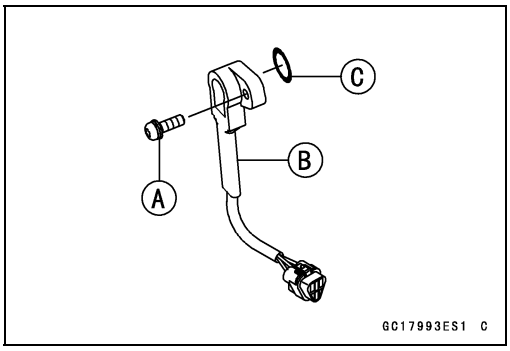

- Engage the inner rotor groove [A] with the throttle shaft [B].

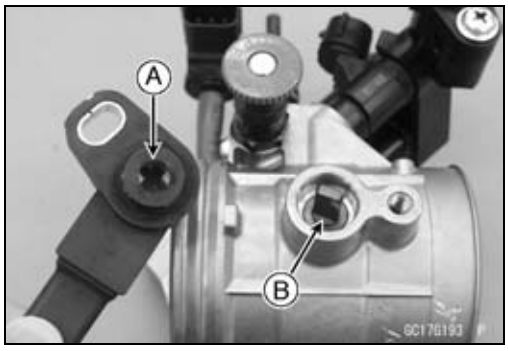

- Insert the throttle sensor [A] into the throttle body.

○Set the throttle sensor to the throttle body assy as shown.

- Turn the throttle sensor counterclockwise [B] until the mounting holes align.
- Tighten the throttle sensor mounting screw lightly.

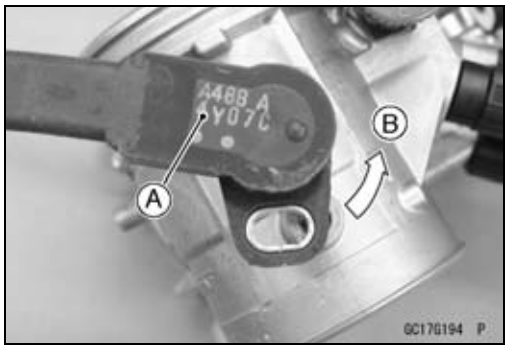

- Connect the measuring adapter [A] between the main harness [B] and the throttle sensor [C].

  Special Tool - Measuring Adapter: 57001-1700

- Connect a digital meter [D] to the measuring adapter leads.

  Throttle Sensor Output Voltage
  Connections to Adapter:
  Digital Meter (+) → W (sensor Y) lead
  Digital Meter (–) → BK (sensor BK) lead

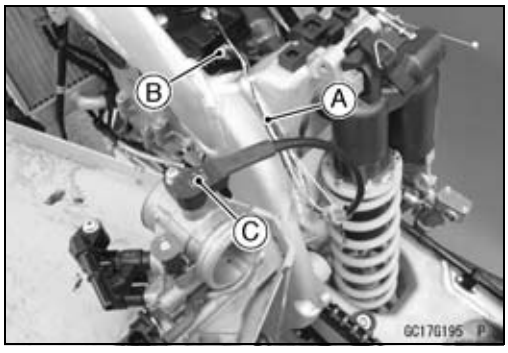

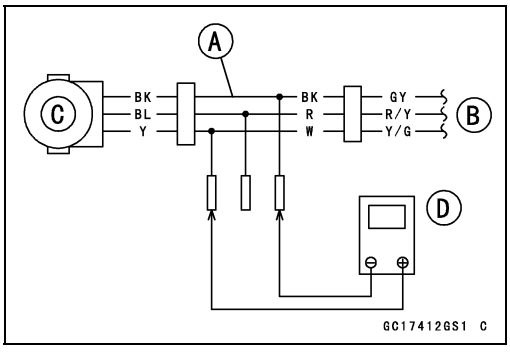

- Refer to the Self-diagnosis Procedures, connect the 12 V battery to the main harness.

Throttle Sensor (Service Code 11)

- Adjust the sensor position so that the output voltage is within the specified voltage range.

Throttle Sensor Output Voltage
Standard: DC 0.57 ~ 0.63 V

★If the input voltage reading shows other than 5 V, calculate a valid output voltage range as follows:

Example:
In the case of an input voltage of 4.75 V
0.57 × 4.75 ÷ 5.00 = 0.54 V
0.63 × 4.75 ÷ 5.00 = 0.60 V
Thus, the valid range is 0.54 ~ 0.60 V.

- Once the sensor is properly adjusted, tighten the throttle sensor mounting screw.

Torque - Throttle Sensor Mounting Screw: 3.4 N·m (0.35 kgf·m, 30 in·lb)

NOTE

○*Take care not to vary the output voltage when tightening the throttle sensor screw.*

- Turn the throttle from closed to full open more than 2 times, and measure the output voltage.

★If the output voltage is not within the specified range, readjust the sensor.

- Install the throttle body assy (see Throttle Body Assy Installation).

Throttle Sensor Input Voltage Inspection

NOTE

○*Be sure the battery is fully charged.*

- Remove:
  Air Cleaner Housing (see Air Cleaner Housing Removal)
- Disconnect the throttle sensor connector and connect the measuring adapter [A] between these connectors.
  Main Harness [B]
  Throttle Sensor [C]

Special Tool - Measuring Adapter: 57001-1700

- Connect a digital meter [D] to the measuring adapter leads.

Throttle Sensor Input Voltage
Connections to Adapter:
Digital Meter (+) → R (sensor BL) lead
Digital Meter (–) → BK (sensor BK) lead

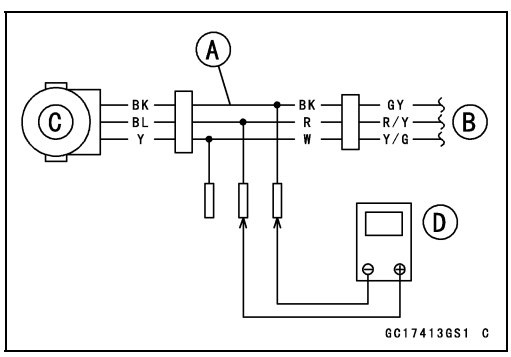

- Refer to the Self-diagnosis Procedures, connect the 12 V battery to the main harness.

Throttle Sensor (Service Code 11)

- Measure the input voltage with the engine stopped and with the connector joined.

Input Voltage
Standard: DC 4.75 ~ 5.25 V

- Disconnect the power supply harness.

★If the reading is within the standard, check the output voltage (see Throttle Sensor Output Voltage Inspection).

★If the reading is out of the standard, remove the ECU and check the wiring for continuity between the main harness connectors.

○Disconnect the ECU and sensor connectors.

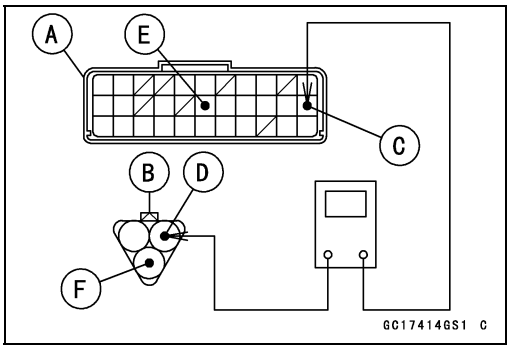

Wiring Continuity Inspection
ECU Connector [A] ←→
Throttle Sensor Connector [B]
R/Y lead [C] (ECU terminal 12) ←→ R/Y lead [D]
GY lead [E] (ECU terminal 17) ←→ GY lead [F]

★If the wiring is good, check the ECU for its ground and power supply (see ECU Power Supply Inspection).

★If the ground and power supply are good, replace the ECU (see ECU Removal/Installation).

Throttle Sensor Output Voltage Inspection

- Measure the throttle sensor output voltage in the same way as input voltage inspection. Note the following.

○Disconnect the throttle sensor connector and connect the measuring adapter [A] between these connectors.
Main Harness [B]
Throttle Sensor [C]
Digital Meter [D]

Special Tool - Measuring Adapter: 57001-1700

Throttle Sensor Output Voltage
Connections to Adapter:
Digital Meter (+) → W (sensor Y) lead
Digital Meter (–) → BK (sensor BK) lead

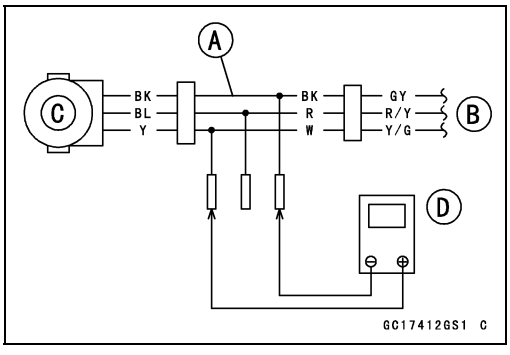

- Start the engine and warm it up thoroughly.
- Check the idle speed to ensure the throttle opening is correct.

Idle Speed
Standard: 2 000 ±50 r/min (rpm)

★If the idle speed is out of the specified range, adjust it (see Idle Speed Adjustment in the Periodic Maintenance chapter).

Throttle Sensor (Service Code 11)

- Measure the output voltage with the engine stopped, and with the connector joined.
- Refer to the Self-diagnosis Procedures, connect the 12 V battery to the main harness.

Output Voltage
Standard: DC 0.57 ~ 0.63 V at idle throttle opening
DC 3.555 ~ 3.985 V at full throttle opening (for reference)

NOTE

○*Open the throttle, confirm the output voltage will be rise.*
○*The standard voltage refers to the value when the voltage reading at the Input Voltage Inspection shows 5 V exactly.*
○*When the input voltage reading shows other than 5 V, derive a voltage range as follows.*
Example:
In the case of a input voltage of 4.75 V.
0.57 × 4.75 ÷ 5.00 = 0.54 V
0.63 × 4.75 ÷ 5.00 = 0.60 V
Thus, the valid range is 0.54 ~ 0.60 V

- Disconnect the power supply harness.

★If the reading is out of the standard, check the throttle sensor resistance (see Throttle Sensor Resistance Inspection).

★If the reading is within the standard, remove the ECU and check the wiring for continuity between the main harness connectors.
○Disconnect the ECU and sensor connectors.

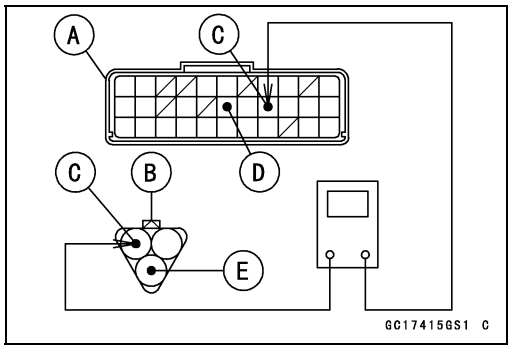

Wiring Continuity Inspection
ECU Connector [A] ←→
Throttle Sensor Connector [B]
Y/G lead [C] (ECU terminal 15) ←→ Y/G lead
GY lead [D] (ECU terminal 17) ←→ GY lead [E]

★If the wiring is good, check the ECU for its ground and power supply (see ECU Power Supply Inspection).
★If the ground and power supply are good, replace the ECU (see ECU Removal/Installation).

Throttle Sensor Resistance Inspection

- Disconnect the throttle sensor connector.
- Connect a digital meter [A] to the throttle sensor connector [B].
- Measure the throttle sensor resistance.

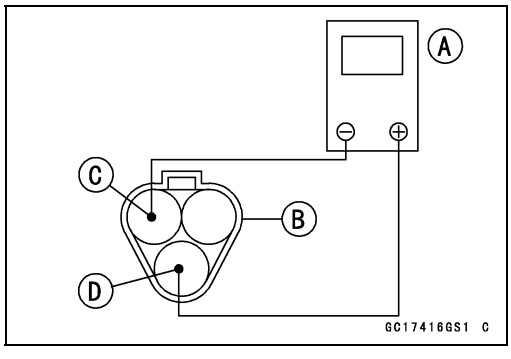

Throttle Sensor Resistance
Connections:
BL lead [C] ← → BK lead [D]

Standard: 4 ~ 6 kΩ

★If the reading is out of the standard, replace the throttle sensor (see Throttle Sensor Replacement).
★If the reading is within the standard, but the problem still exists, replace the ECU (see ECU Removal/Installation).

Throttle Sensor (Service Code 11)

Throttle Sensor Circuit

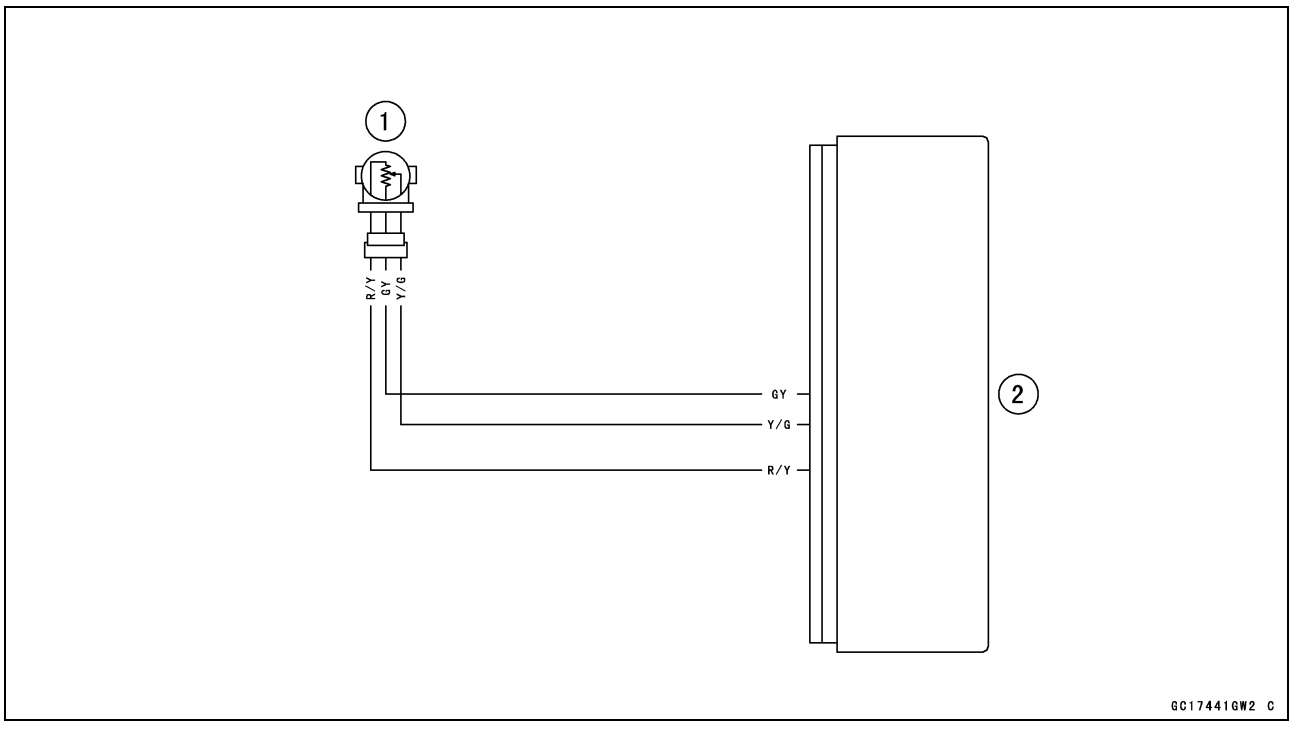

1. Throttle Sensor
2. ECU

Intake Air Pressure Sensor (Service Code 12)

Intake Air Pressure Sensor Removal

NOTICE
Never drop the intake air pressure sensor, especially on a hard surface. Such a shock to the sensor can damage it.

- Remove:
  Fuel Tank (see Fuel Tank Removal)
  Fuel Hose (see Fuel Hose Replacement in the Periodic Maintenance chapter)
  Intake Air Pressure Sensor Connector [A]
- Slide the rubber damper [B] to outside [C] and remove it with the intake air pressure sensor [D] from the plate [E].

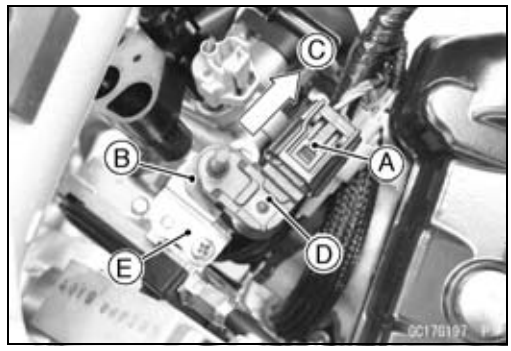

- Disconnect the vacuum hose [A] from the intake air pressure sensor [B].
- Remove the intake air pressure sensor from the rubber damper [C].

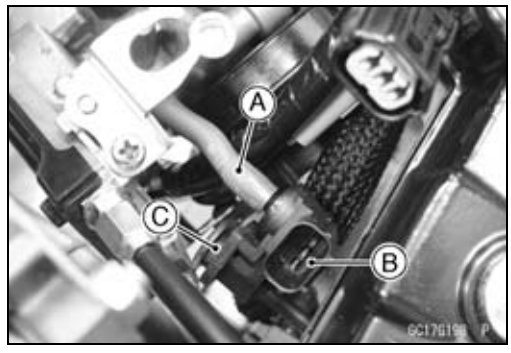

Intake Air Pressure Sensor Installation

- Assemble the intake air pressure sensor [A] and rubber damper [B] as shown.

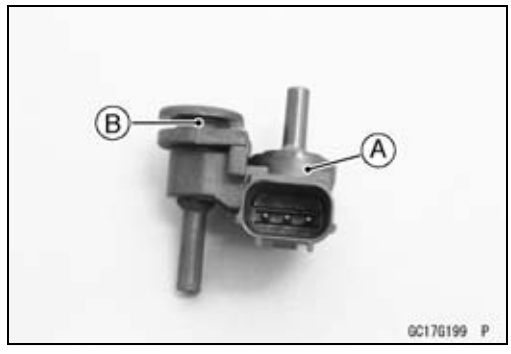

- Connect the vacuum hose to the intake air pressure sensor [A].
- Install the intake air pressure sensor to the plate [B].
- Connect the intake air pressure sensor connector [C].

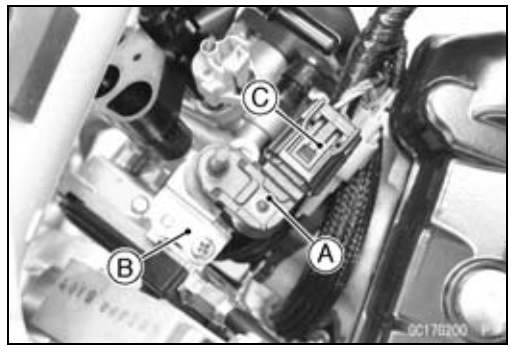

Intake Air Pressure Sensor (Service Code 12)

Intake Air Pressure Sensor Input Voltage Inspection

NOTE

○*Be sure the battery is fully charged.*

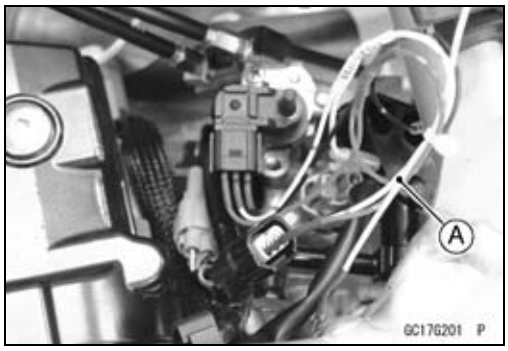

- Disconnect the intake air pressure sensor connector and connect the measuring adapter [A] between these connectors.
  Main Harness [B]
  Intake Air Pressure Sensor [C]

Special Tool - Measuring Adapter: 57001-1700

- Connect a digital meter [D] to the measuring adapter leads.

Intake Air Pressure Sensor Input Voltage
Connections to Adapter:
Digital Meter (+) → R (sensor R/Y) lead
Digital Meter (–) → BK (sensor GY) lead

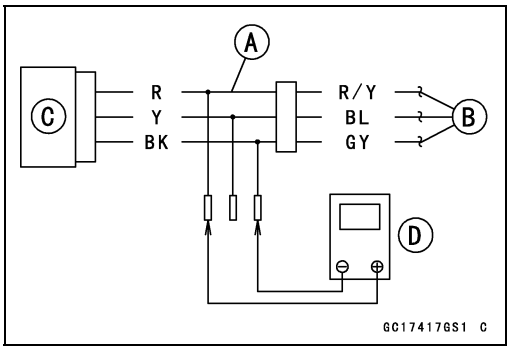

- Refer to the Self-diagnosis Procedures, connect the 12 V battery to the main harness.
- Measure the input voltage with the engine stopped and with the connector joined.

Input Voltage
Standard: DC 4.75 ~ 5.25 V

- Disconnect the power supply harness.

★If the reading is within the standard, check the output voltage (see Intake Air Pressure Sensor Output Voltage Inspection).

★If the reading is out of the standard, remove the ECU and check the wiring for continuity between the main harness connectors.

○Disconnect the ECU and sensor connectors.

Wiring Continuity Inspection
ECU Connector [A] ←→
Intake Air Pressure Sensor Connector [B]
R/Y lead [C] (ECU terminal 12)
GY lead [D] (ECU terminal 17)

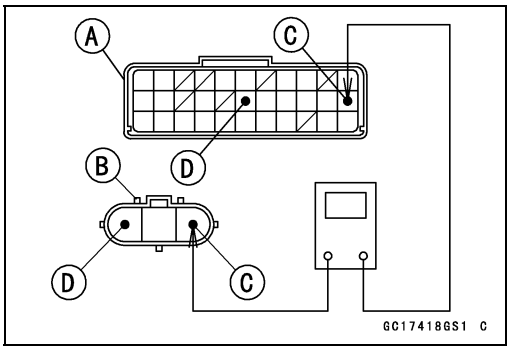

★If the wiring is good, check the ECU for its ground and power supply (see ECU Power Supply Inspection).

★If the ground and power supply are good, replace the ECU (see ECU Removal/Installation).

Intake Air Pressure Sensor (Service Code 12)

Intake Air Pressure Sensor Output Voltage Inspection

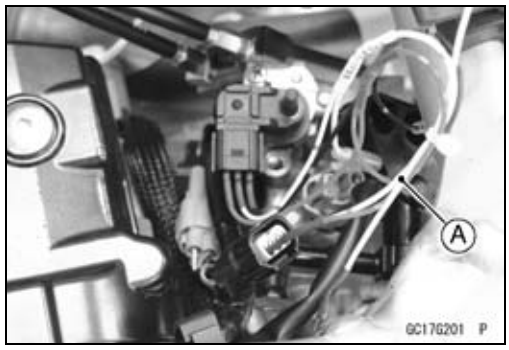

- Measure the intake air pressure sensor output voltage in the same way as input voltage inspection. Note the following.

○Disconnect the intake air pressure sensor connector and connect the measuring adapter [A] between these connectors.
Main Harness [B]
Intake Air Pressure Sensor [C]
Digital Meter [D]

Special Tool - Measuring Adapter: 57001-1700

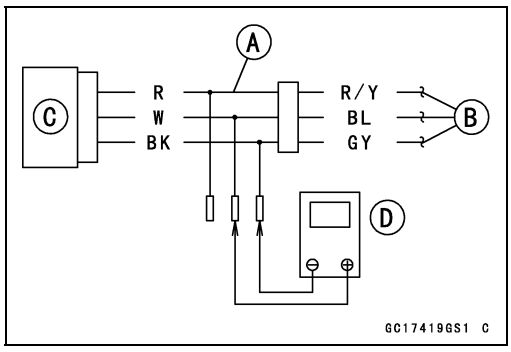

Intake Air Pressure Sensor Output Voltage
Connections to Adapter:
Digital Meter (+) → W (sensor BL) lead
Digital Meter (–) → BK (sensor GY) lead

- Measure the output voltage with the engine stopped, and with the connector joined.
- Refer to the Self-diagnosis Procedures, connect the 12 V battery to the main harness.

Output Voltage
Standard: **DC 3.80 ~ 4.20 V at standard atmospheric pressure (101.32 kPa, 76 cmHg)**

NOTE

○*The output voltage changes according to local atmospheric pressure.*

- Disconnect the power supply harness.

★If the reading is out of the usable range, replace the sensor.

★If the reading is within the usable range, remove the ECU and check the wiring for continuity between the main harness connectors.

○Disconnect the ECU and sensor connectors.

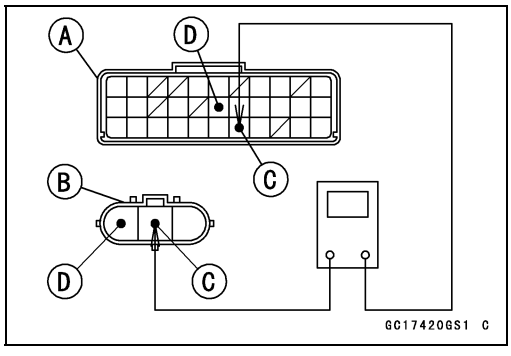

Wiring Continuity Inspection
ECU Connector [A] ←→
Intake Air Pressure Sensor Connector [B]
BL lead [C] (ECU terminal 27)
GY lead [D] (ECU terminal 17)

Intake Air Pressure Sensor (Service Code 12)

★If the wiring is good, check the sensor for various vacuum.
- Remove the intake air pressure sensor [A] and disconnect the vacuum hose from the sensor.
- Connect an auxiliary hose [B] to the intake air pressure sensor.
- Temporarily install the intake air pressure sensor.
- Connect a digital meter [C], vacuum gauge [D], the fork oil level gauge [E] and the measuring adapter to the intake air pressure sensor.

Special Tools - Fork Oil Level Gauge: 57001-1290
Vacuum Gauge: 57001-1369
Measuring Adapter: 57001-1700

Intake Air Pressure Sensor Output Voltage Connections to Adapter:

Digital Meter (+) → W (sensor BL) lead

Digital Meter (–) → BK (sensor GY) lead

- Refer to the Self-diagnosis Procedures, connect the 12 V battery to the main harness.
- Measure the intake air pressure sensor output voltage from various vacuum readings, while pulling the handle of the fork oil level gauge.

○Check the intake air pressure sensor output voltage, using the following formula and chart.

Suppose:
Pg: Vacuum Pressure (Gauge) of Throttle Body
Pl: Local Atmospheric Pressure (Absolute) measured by a barometer
Pv: Vacuum Pressure (Absolute) of Throttle Body
Vv: Sensor Output Voltage (V)

then
Pv = Pl – Pg

For example, suppose the following data is obtained:
Pg = 8 cmHg (Vacuum Gauge Reading)
Pl = 70 cmHg (Barometer Reading)
Vv = 3.2 V (Digital Meter Reading)

then
Pv = 70 – 8 = 62 cmHg (Absolute)

Plot this Pv (62 cmHg) at a point [1] on the chart and draw a vertical line through the point. Then, you can get the usable range [2] of the sensor output voltage.
Usable range = 3.08 ~ 3.48 V
Plot Vv (3.2 V) on the vertical line. → Point [3].

Results: In the chart, Vv is within the usable range and the sensor is normal.

★If the reading is out of the usable range, replace the sensor.
★If the reading is within the usable range, check the ECU for its ground and power supply (see ECU Power Supply Inspection).
★If the ground and power supply are good, replace the ECU (see ECU Removal/Installation).

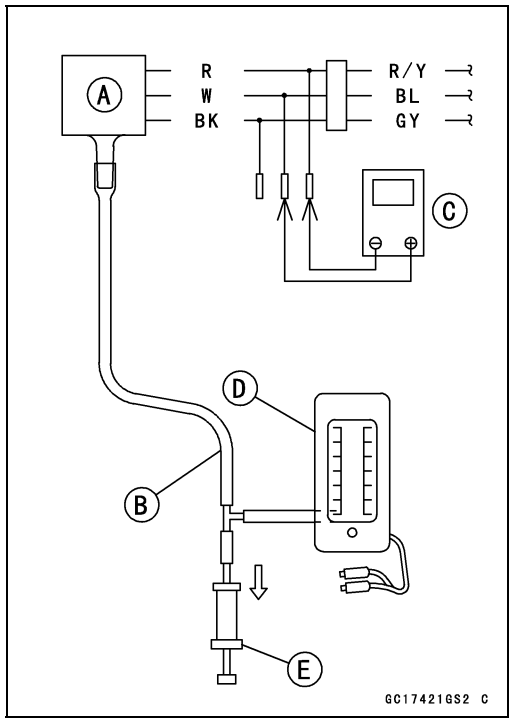

Intake Air Pressure Sensor (Service Code 12)

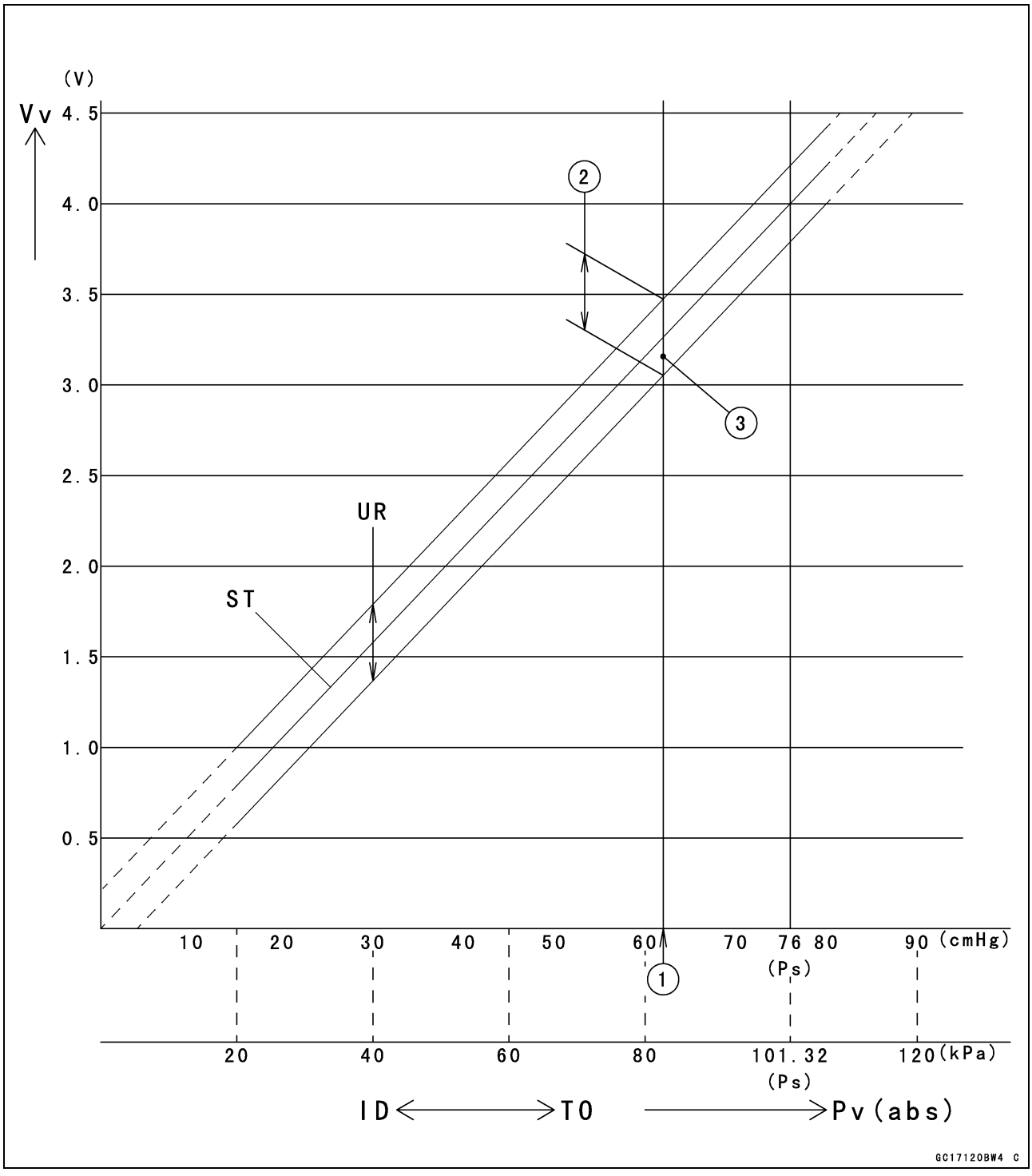

ID: Idling
Ps: Standard Atmospheric Pressure (Absolute)
Pv: Throttle Vacuum Pressure (Absolute)
ST: Standard of Sensor Output Voltage (V)
TO: Throttle Full Open
UR: Usable Range of Sensor Output Voltage (V)
Vv: Intake Air Pressure Sensor Output Voltage (V) (Digital Meter Reading)

Intake Air Pressure Sensor (Service Code 12)

Intake Air Pressure Sensor Circuit

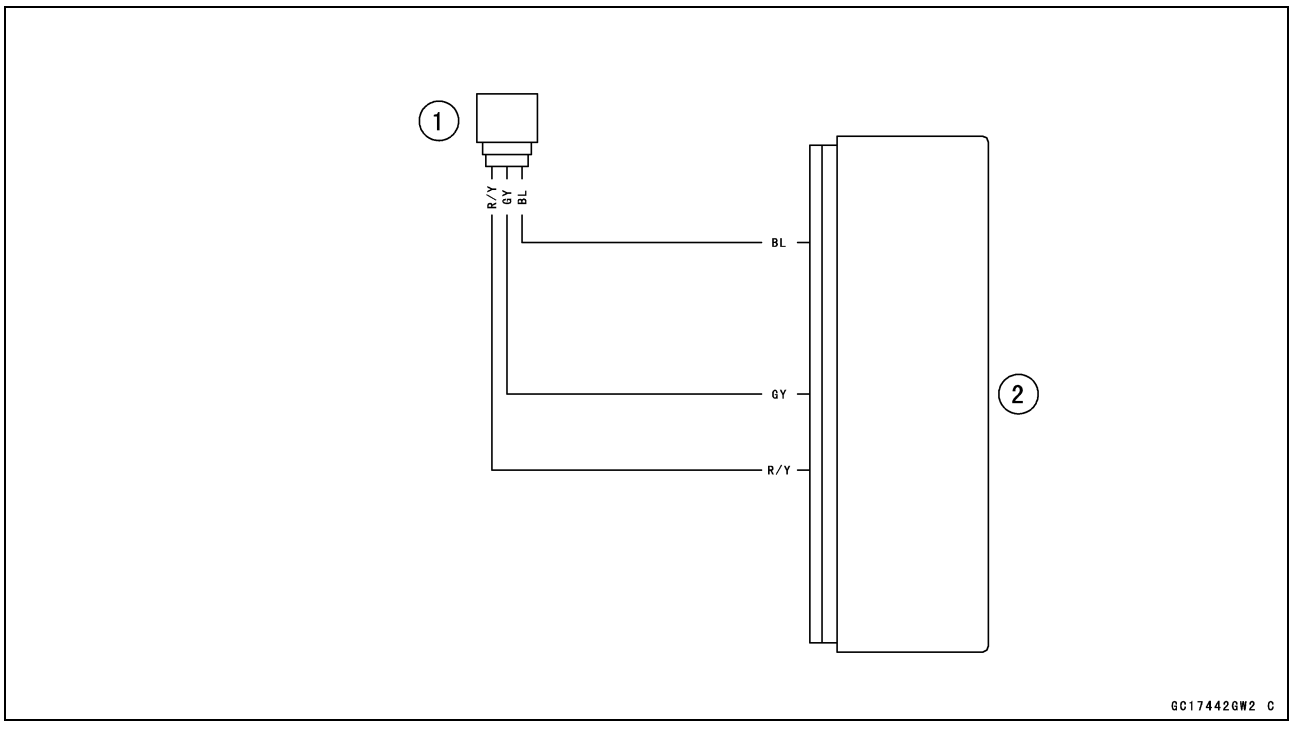

1. Intake Air Pressure Sensor
2. ECU

Intake Air Temperature Sensor (Service Code 13)

Intake Air Temperature Sensor Removal/Installation

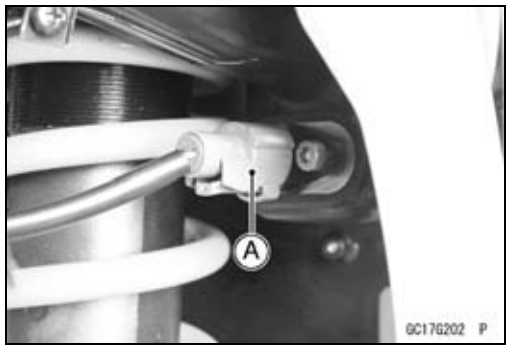

NOTICE

Never drop the intake air temperature sensor, especially on a hard surface. Such a shock to the sensor can damage it.

- Remove the seat (see Seat Removal in the Frame chapter).
- Disconnect the connector [A].

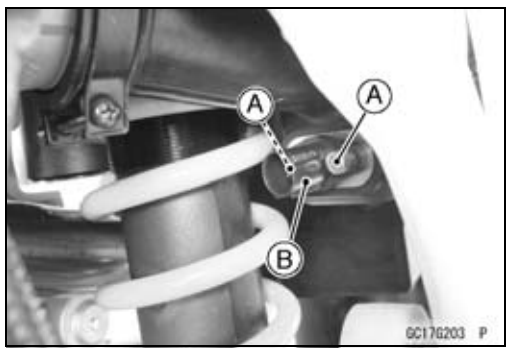

- Remove the intake air temperature sensor bolts [A].
- Pull out the intake air temperature sensor [B].

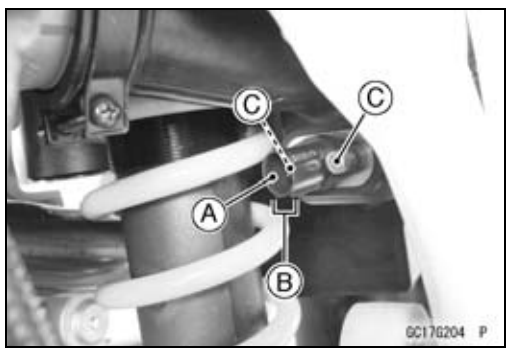

- Put the intake air temperature sensor [A] into the air cleaner housing.

○Face the locks [B] to the bottom.

- Apply a non-permanent locking agent to the threads of the intake air temperature sensor bolts [C].
- Tighten:

Torque - Intake Air Temperature Sensor Bolts: 3.3 N·m (0.34 kgf·m, 29 in·lb)

- Connect the sensor connector.
- Install the removed parts (see appropriate chapters).

Intake Air Temperature Sensor Output Voltage Inspection

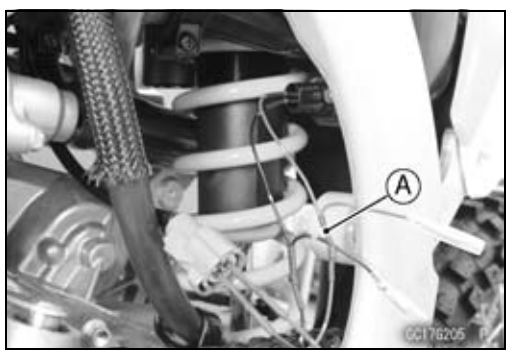

NOTE

○*Be sure the battery is fully charged.*

- Remove the seat (see Seat Removal in the Frame chapter).
- Disconnect the intake air temperature sensor connector and connect the measuring adapter [A] between these connectors.

  Main Harness [B]
  Intake Air Temperature Sensor [C]

Special Tool - Measuring Adapter: 57001-1700

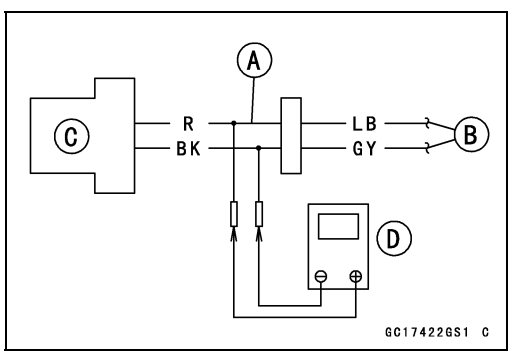

- Connect a digital meter [D] to the measuring adapter leads.

Intake Air Temperature Sensor Output Voltage Connections to Adapter:

Digital Meter (+) → R (sensor LB) lead

Digital Meter (–) → BK (sensor GY) lead

- Refer to the Self-diagnosis Procedures, connect the 12 V battery to the main harness.

Intake Air Temperature Sensor (Service Code 13)

- Measure the output voltage with the engine stopped and the connector joined.

Output Voltage
Standard: About DC 2.28 ~ 3.43 V @20°C (68°F)

NOTE

○*The output voltage changes according to the intake air temperature.*

- Disconnect the power supply harness.

★If the reading is within the standard, check the ECU for its ground, and power supply (see ECU Power Supply Inspection).
★If the ground and power supply are good, replace the ECU (see ECU Removal/Installation).

★If the reading is out of the standard, remove the ECU and check the wiring for continuity between the main harness connectors.
○Disconnect the ECU and sensor connectors.

Wiring Continuity Inspection
ECU Connector [A] ←→
Intake Air Temperature Sensor Connector [B]
LB lead [C] (ECU terminal 19)
GY lead [D] (ECU terminal 17)

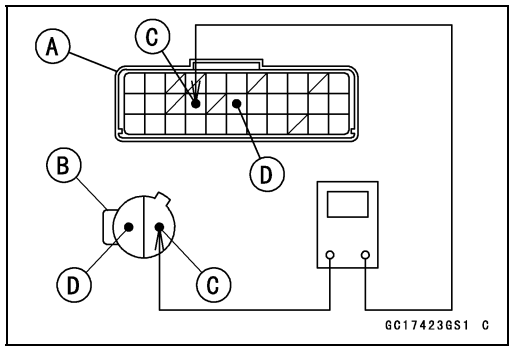

★If the wiring is good, check the intake air temperature sensor resistance (see Intake Air Temperature Sensor Resistance Inspection).

Intake Air Temperature Sensor Resistance Inspection

- Remove the intake air temperature sensor (see Intake Air Temperature Sensor Removal/Installation).
- Suspend the sensor [A] in a container of machine oil so that the heat-sensitive portion is submerged.
- Suspend a thermometer [B] with the heat-sensitive portions [C] located in almost the same depth.

NOTE

○*The sensor and thermometer must not touch the container side or bottom.*

- Place the container over a source of heat and gradually raise the temperature of the oil while stirring the oil gently for even temperature.
- Using a digital meter, measure the internal resistance of the sensor.

Intake Air Temperature Sensor Resistance
Standard: 0.909 ~ 1.363 kΩ @40°C (104°F)
0.124 ~ 0.186 kΩ @100°C (212°F)

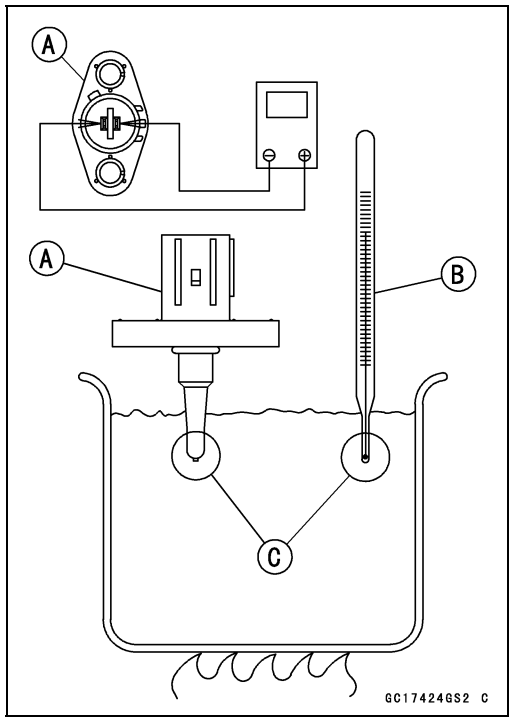

★If the reading is out of the standard, replace the sensor.
★If the reading is within the standard, but the problem still exists, replace the ECU (see ECU Removal/Installation).

Intake Air Temperature Sensor (Service Code 13)

Intake Air Temperature Sensor Circuit

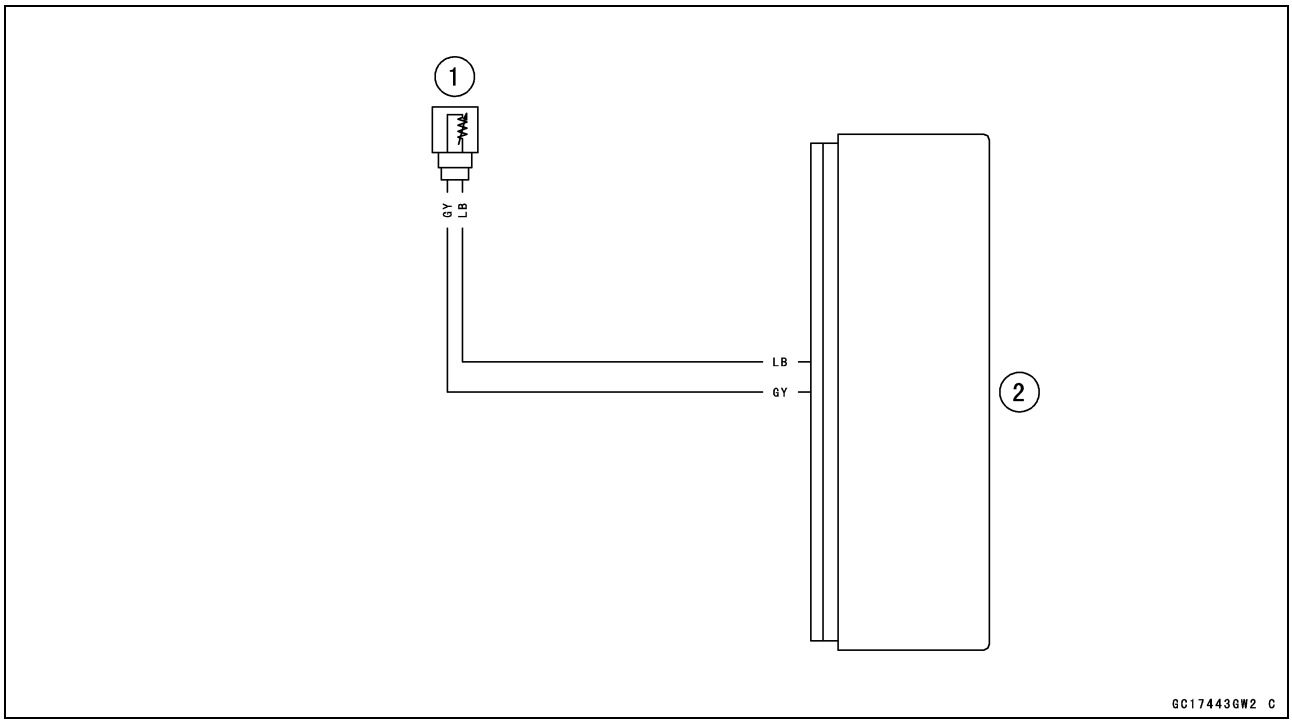

1. Intake Air Temperature Sensor
2. ECU

Water Temperature Sensor (Service Code 14)

Water Temperature Sensor Removal/Installation

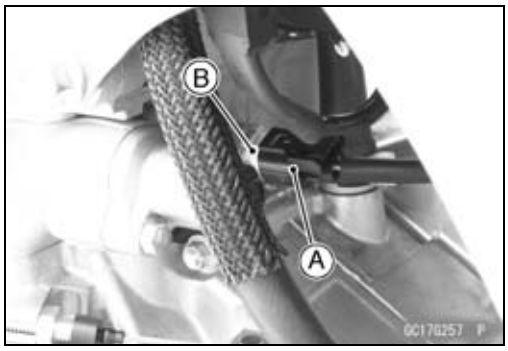

NOTICE
Never drop the water temperature sensor, especially on a hard surface. Such a shock to the sensor can damage it.

- Drain the coolant (see Coolant Draining in the Cooling System chapter).
- Disconnect the water temperature sensor connector [A].
- Remove:
  Water Temperature Sensor [B]
- Replace the O-ring with a new one.
- Install the new O-ring to the water temperature sensor.
- Tighten:

  Torque - Water Temperature Sensor: 12 N·m (1.2 kgf·m, 106 in·lb)

- Fill the engine with coolant and bleed the air from the cooling system (see Coolant Filling in the Cooling System chapter).

Water Temperature Sensor Output Voltage Inspection

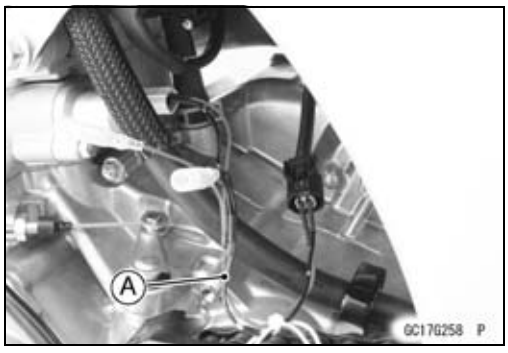

NOTE

○*Be sure the battery is fully charged.*

- Disconnect the water temperature sensor connector and connect the measuring adapter [A] between these connectors.
  Main Harness [B]
  Water Temperature Sensor [C]

  Special Tool - Measuring Adapter: 57001-1700

- Connect a digital meter [D] to the measuring adapter leads.

  Water Temperature Sensor Output Voltage Connections to Adapter:

  Digital Meter (+) → R (sensor W) lead

  Digital Meter (–) → BK (sensor GY) lead

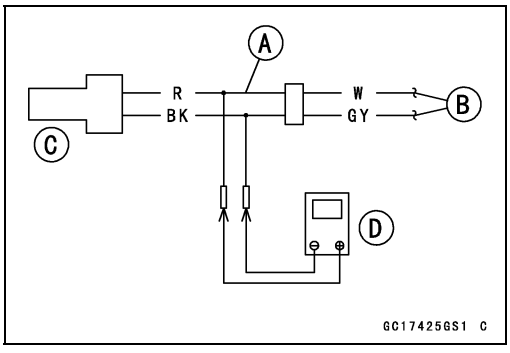

Water Temperature Sensor (Service Code 14)

- Refer to the Self-diagnosis Procedures, connect the 12 V battery to the main harness.
- Measure the output voltage with the engine stopped and the connector joined.

Output Voltage
Standard: About DC 2.80 ~ 2.97 V @20°C (68°F)

NOTE

○*The output voltage changes according to the coolant temperature in the engine.*

- Disconnect the power supply harness.

★If the reading is within the standard, check the ECU for its ground, and power supply (see ECU Power Supply Inspection).

★If the ground and power supply are good, replace the ECU (see ECU Removal/Installation).

★If the reading is out of the standard, remove the ECU and check the wiring for continuity between the main harness connectors.

○Disconnect the ECU and sensor connectors.

Wiring Continuity Inspection
ECU Connector [A] ←→
Water Temperature Sensor Connector [B]
W lead [C] (ECU terminal 21)
GY lead [D] (ECU terminal 17)

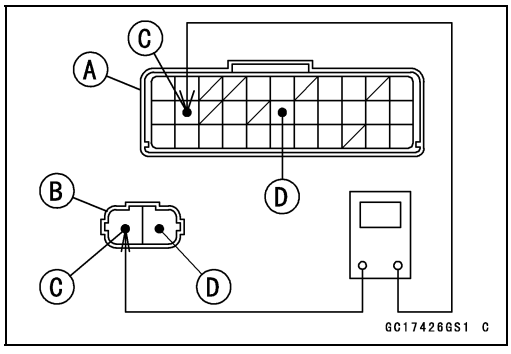

★If the wiring is good, check the water temperature sensor resistance (see Water Temperature Sensor Resistance Inspection).

Water Temperature Sensor (Service Code 14)

Water Temperature Sensor Resistance Inspection

- Remove the water temperature sensor (see Water Temperature Sensor Removal/Installation).
- Suspend the sensor [A] in a container of machine oil so that the heat-sensitive portion and threaded portion are submerged.
- Suspend a thermometer [B] with the heat-sensitive portions [C] located in almost the same depth.

NOTE

○*The sensor and thermometer must not touch the container side or bottom.*

- Place the container over a source of heat and gradually raise the temperature of the oil while stirring the oil gently for even temperature.
- Using a digital meter, measure the internal resistance of the sensor.

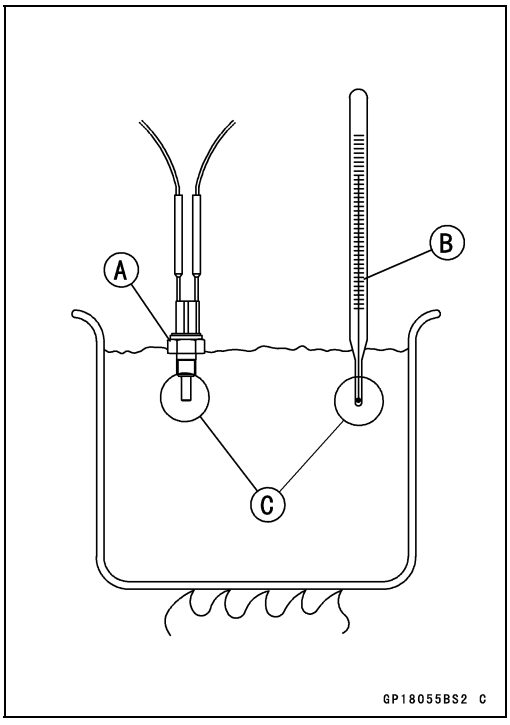

Water Temperature Sensor Resistance

Temperature	Resistance (kΩ)
−20°C (−4°F)	*18.80 ±2.37
0°C (32°F)	*(about 6.544)
40°C (104°F)	1.136 ±0.095
100°C (212°F)	0.153 ±0.0070

*: Reference Information

★If the reading is out of the range, replace the sensor.
★If the reading is within the standard, but the problem still exists, replace the ECU (see ECU Removal/Installation).

Water Temperature Sensor Circuit

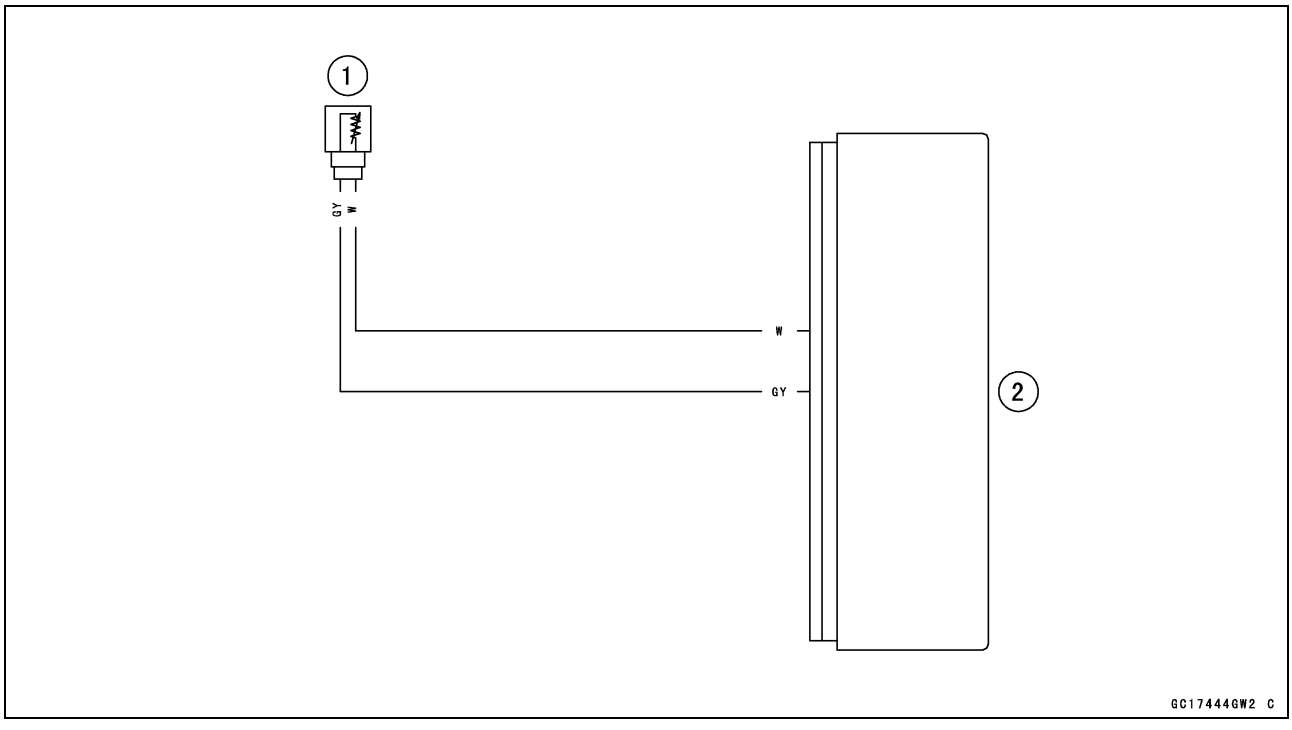

1. Water Temperature Sensor
2. ECU

Crankshaft Sensor (Service Code 21)

The crankshaft sensor has no power source, and when the engine stops, the crankshaft sensor generates no signals.

Crankshaft Sensor Removal/Installation

- Refer to the Stator Coil Removal/Installation in the Electrical System chapter.

Crankshaft Sensor Resistance Inspection

- Refer to the Crankshaft Sensor Inspection in the Electrical System chapter.

★If the reading is within the standard, check the peak voltage (see Crankshaft Sensor Peak Voltage Inspection).

Crankshaft Sensor Peak Voltage Inspection

- Refer to the Crankshaft Sensor Peak Voltage Inspection in the Electrical System chapter.

★If the reading is within the standard, remove the ECU and check the wiring for continuity between the main harness connectors.

○Disconnect the ECU and sensor connectors.

Wiring Continuity Inspection

ECU Connector [A] ←→

Crankshaft Sensor Connector [B]

G/W lead [C] (ECU terminal 24)

W/Y lead [D] (ECU terminal 23)

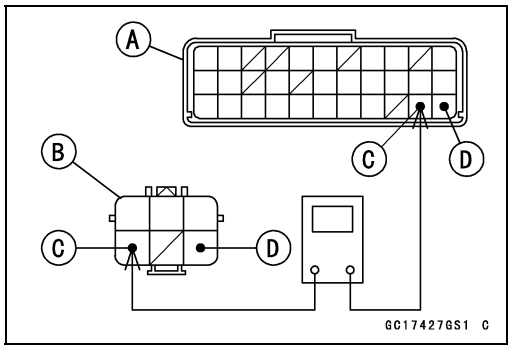

★If the wiring is good, check the ECU for its ground and power supply (see ECU Power Supply Inspection).

★If the ground and power supply are good, replace the ECU (see ECU Removal/Installation).

Crankshaft Sensor Circuit

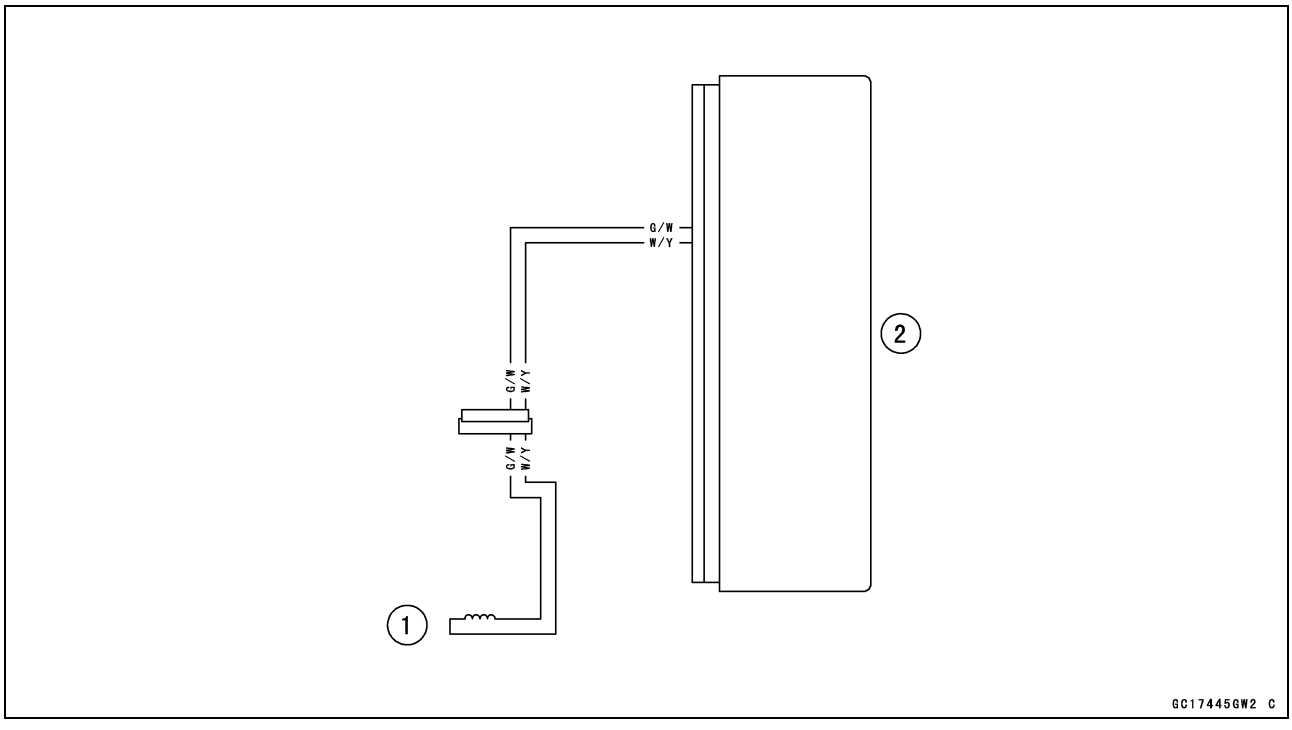

1. Crankshaft Sensor
2. ECU

Gear Position Switch (Service Code 25)

Gear Position Switch Removal

- Remove:
  Shift Pedal (External Shift Mechanism Removal in the Crankshaft/Transmission chapter)
  Gear Position Switch Connector [A] (Gray, 2-pin)
- Open the clamp [B].

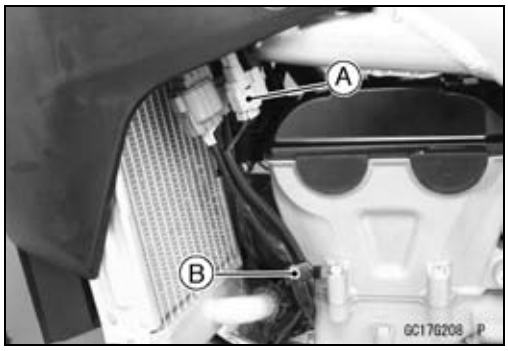

- Open the clamps [A].

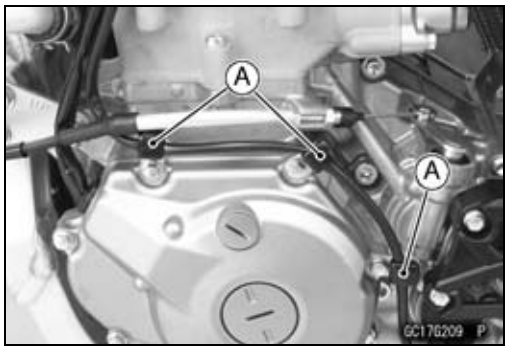

- Remove:
  Screws [A]
  Gear Position Switch [B]

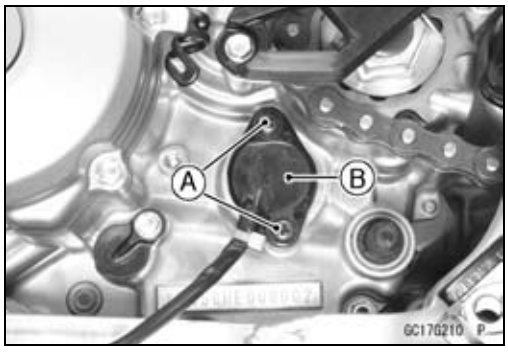

- Remove:
  O-ring [A]
  Gear Position Switch Fingers [B]
  Springs [C]

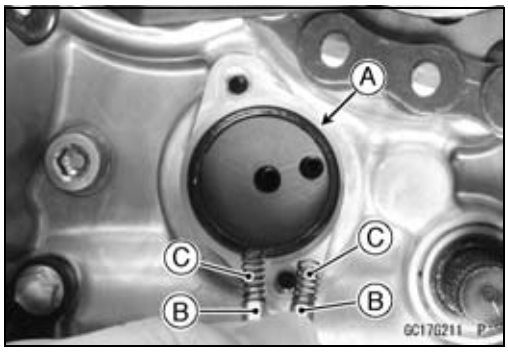

Gear Position Switch Installation

- Install the spring [A] on the switch finger [B].
- Insert the switch finger so that the small diameter [C] is toward the shift drum.
- Replace the O-ring [D] with a new one, and apply grease to it.
- Clean the contact points on the position switch.
- Install the gear position switch so that the lead side faces downward.
- Tighten:

  Torque - Gear Position Switch Screws: 3.0 N·m (0.31 kgf·m, 27 in·lb)

- Install the removed parts (see appropriate chapters).

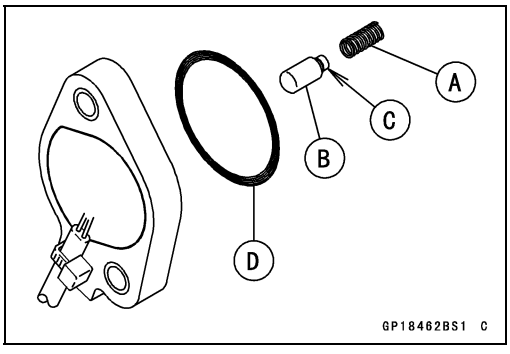

Gear Position Switch (Service Code 25)

Gear Position Switch Inspection

NOTE

○*Be sure the transmission mechanism is good condition.*

- Disconnect the gear position switch lead connector [A] (Gray, 2-pin).

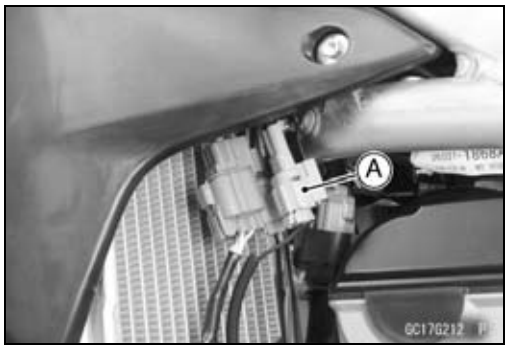

- Set a digital meter [A] and connect it to the terminals in the gear position switch lead connector [B] and ground.
  [C] Internal Circuit

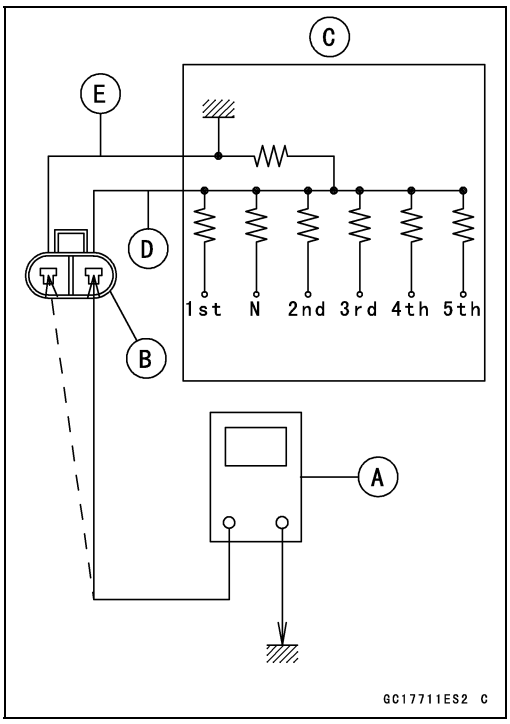

Gear Position Switch Resistance

Gear Position	Connections	
	G/R Lead [D] - Ground	BK Lead [E] - Ground
Neutral	1.43 ~ 1.58 kΩ	about 0 Ω
1st	2.23 ~ 2.46 kΩ	about 0 Ω
2nd	0.95 ~ 1.06 kΩ	about 0 Ω
3rd	644 ~ 711 Ω	about 0 Ω
4th	410 ~ 453 Ω	about 0 Ω
5th	241 ~ 266 Ω	about 0 Ω

★If the digital meter reading is not as specified, replace the gear position switch with a new one.

Gear Position Switch Circuit

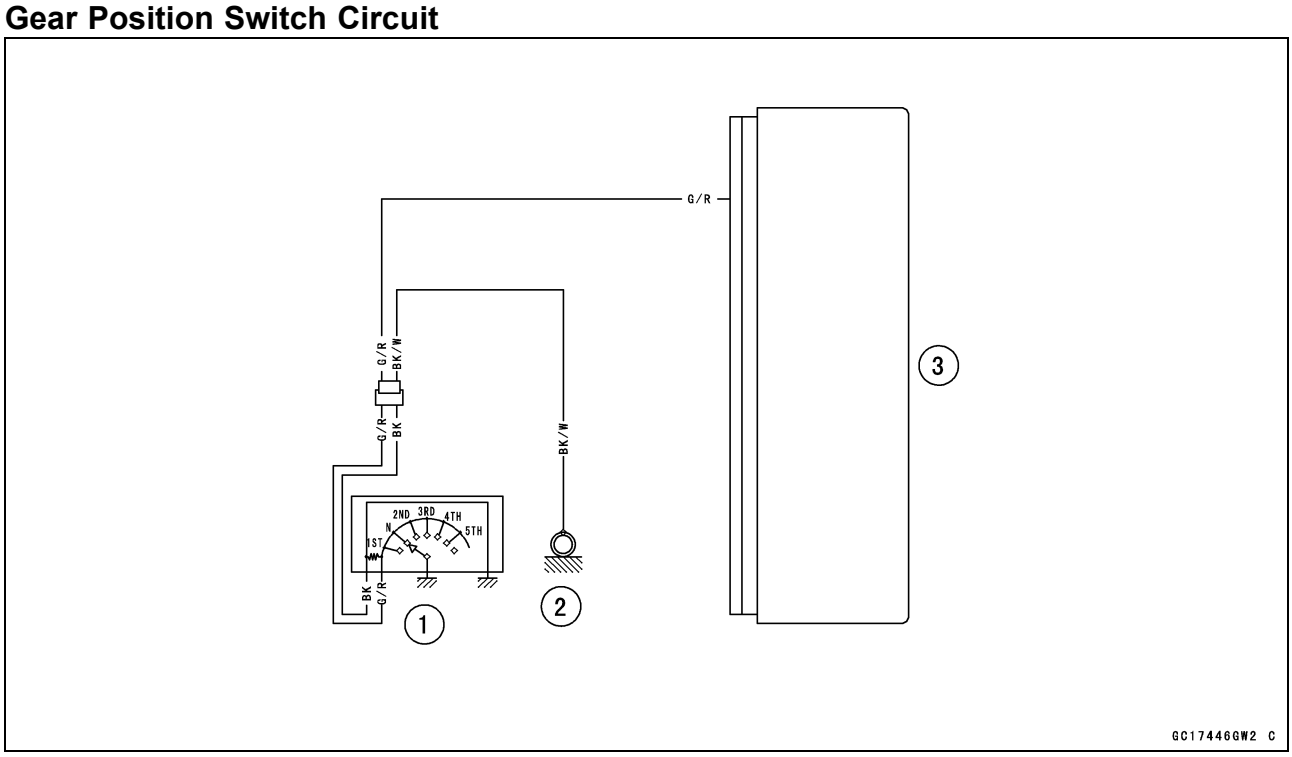

1. Gear Position Switch
2. Frame Ground 1
3. ECU

Vehicle-down Sensor (Service Code 31)

This sensor has a weight [A] with two magnets inside, and sends a signal to the ECU. But when the motorcycle banks 60 ~ 70° or more to either side (in fact falls down), the weight turns and the signal changes. The ECU senses this change, and stops the fuel pump relay, the fuel injectors and the ignition system.

Hall IC [B]

When the motorcycle overturned, the engine stops after 6 seconds if the engine speed is 1 300 r/min (rpm) or more.

Vehicle-down Sensor [A]
Ground Terminal [B]: GY
Output Terminal [C]: BR
Power Source Terminal [D]: R/Y

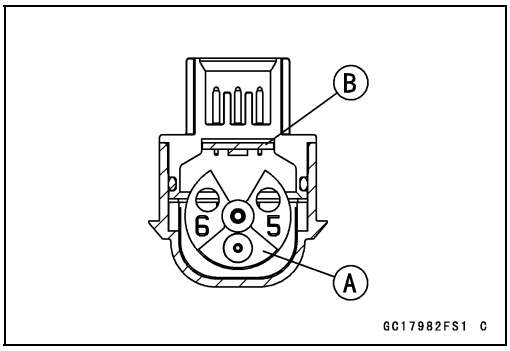

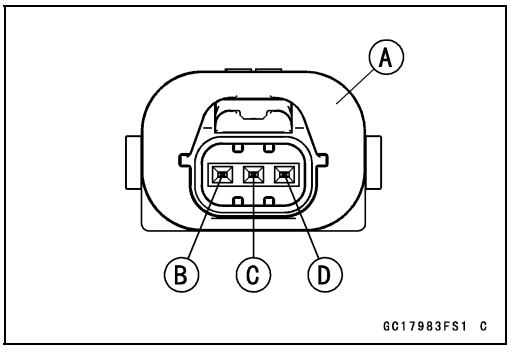

Vehicle-down Sensor Removal

NOTICE

Never drop the vehicle-down sensor especially on a hard surface. Such a shock to the sensor can damage it.

- Remove the vehicle-down sensor [A] from the bracket.
- Disconnect the connector [B].

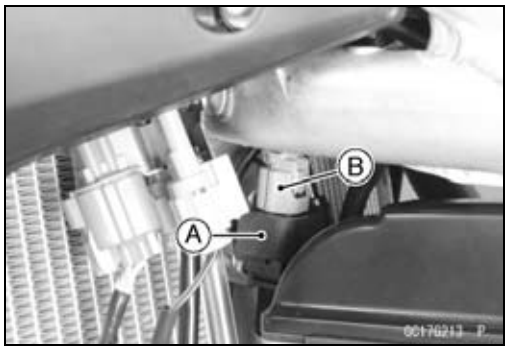

Vehicle-down Sensor Installation

- Connect the vehicle-down sensor connector.
- The UP mark [A] of the sensor should face upward.

⚠ WARNING

Incorrect installation of the vehicle-down sensor could cause sudden loss of engine power. The rider could lose balance during certain riding situations for an accident resulting in injury or death. Ensure that the vehicle-down sensor is held in place by the sensor bracket.

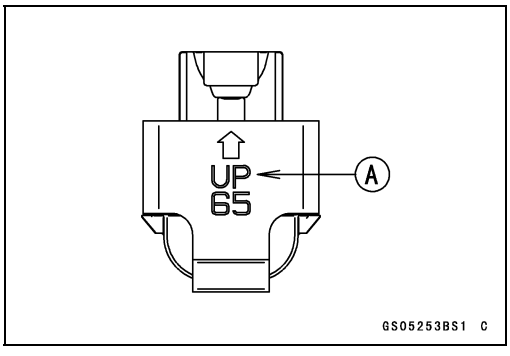

Vehicle-down Sensor (Service Code 31)

Vehicle-down Sensor Input Voltage Inspection

NOTE

○*Be sure the battery is fully charged.*

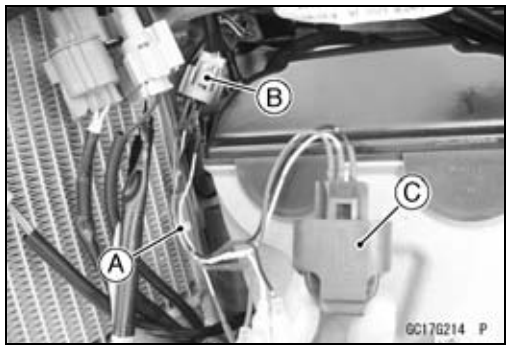

- Disconnect the vehicle-down sensor connector and connect the measuring adapter [A] between these connectors.
  Main Harness [B]
  Vehicle-down Sensor [C]

  Special Tool - Measuring Adapter: 57001-1700

- Connect a digital meter [D] to the measuring adapter leads.

  Vehicle-down Sensor Input Voltage
  Connections to Adapter:
  Digital Meter (+) → R (sensor R/Y) lead
  Digital Meter (–) → BK (sensor GY) lead

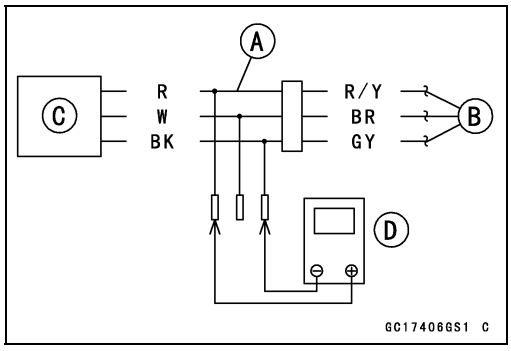

- Refer to the Self-diagnosis Procedures, connect the 12 V battery to the main harness.

- Measure the input voltage with the engine stopped and with the connector joined.

  Input Voltage
  Standard: DC 4.75 ~ 5.25 V

★If the reading is within the standard, check the output voltage (see Vehicle-down Sensor Output Voltage Inspection).

★If the reading is out of the standard, remove the ECU and check the wiring for continuity between the main harness connectors.

○Disconnect the ECU and sensor connectors.

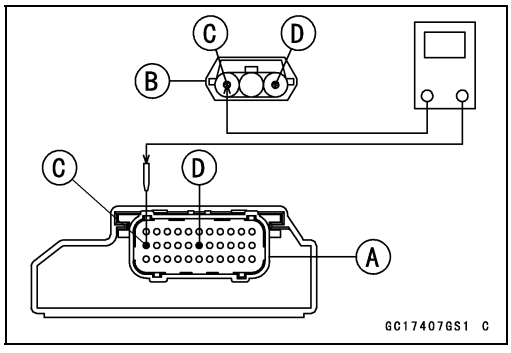

Wiring Continuity Inspection
ECU Connector [A] ←→
Vehicle-down Sensor Connector [B]
R/Y lead [C] (ECU terminal 12)
GY lead [D] (ECU terminal 17)

★If the wring is good, check the ECU for its ground and power supply (see ECU Power Supply Inspection).

★If the ground and power supply are good, replace the ECU (see ECU Removal/Installation).

Vehicle-down Sensor (Service Code 31)

Vehicle-down Sensor Output Voltage Inspection

- Remove the vehicle-down sensor, and connect the measuring adapter [A].

  Special Tool - Measuring Adapter: 57001-1700

  Main Harness [B]
  Vehicle-down Sensor [C]

- Connect a digital meter [D] to the harness adapter leads.

  Vehicle-down Sensor Output Voltage Connections to Adapter:

  Digital Meter (+) → W (sensor BR) lead

  Digital Meter (–) → BK (sensor GY) lead

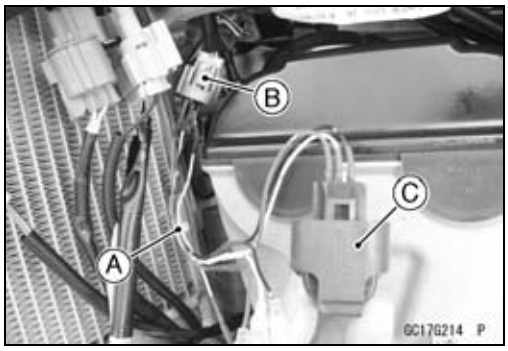

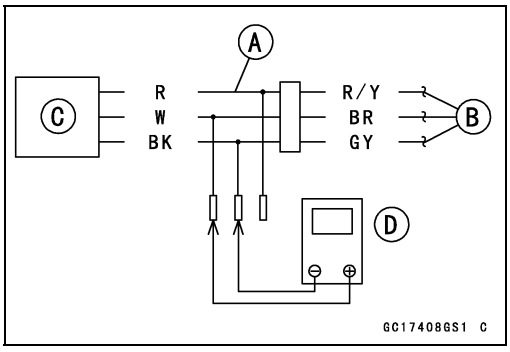

- Hold the vehicle-down sensor vertically.
- Refer to the Self-diagnosis Procedures, connect the 12 V battery to the main harness.
- Measure the output voltage with the engine stopped, and with the connector joined.

○Tilt the sensor 60 ~ 70° or more [A] right or left, then hold the sensor almost vertical the sensor with the arrow mark pointed up [B].

Output Voltage

Standard: With sensor tilted 60 ~ 70° or more right or left: DC 0.65 ~ 1.35 V

With sensor arrow mark pointed up: DC 3.55 ~ 4.45 V

★If the reading is out of the standard, replace the sensor.

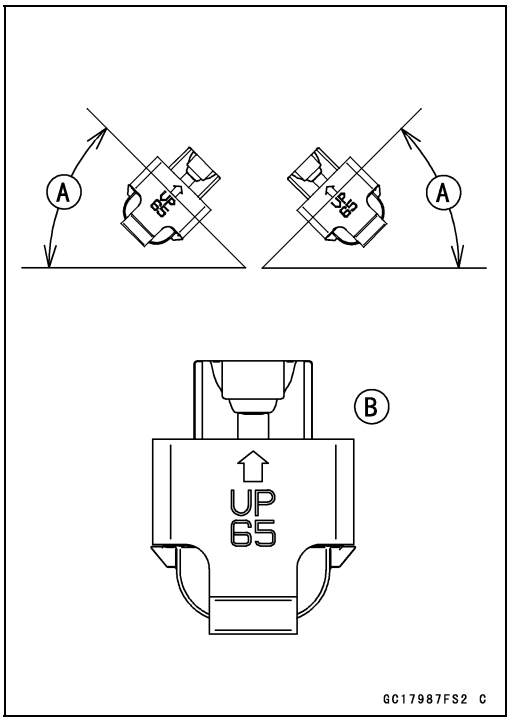

Vehicle-down Sensor (Service Code 31)

★If the reading is within the standard, remove the ECU and check the wiring for continuity between the main harness connectors.

○Disconnect the ECU and sensor connectors.

Wiring Continuity Inspection

ECU Connector [A] ←→

Vehicle-down Sensor Connector [B]

BR lead [C] (ECU terminal 16)

GY lead [D] (ECU terminal 17)

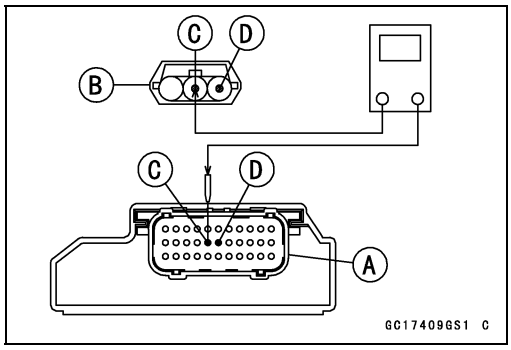

★If the wiring is good, check the ECU for its ground and power supply (see ECU Power Supply Inspection).

★If the ground and power supply are good, replace the ECU (see ECU Removal/Installation).

Vehicle-down Sensor Circuit

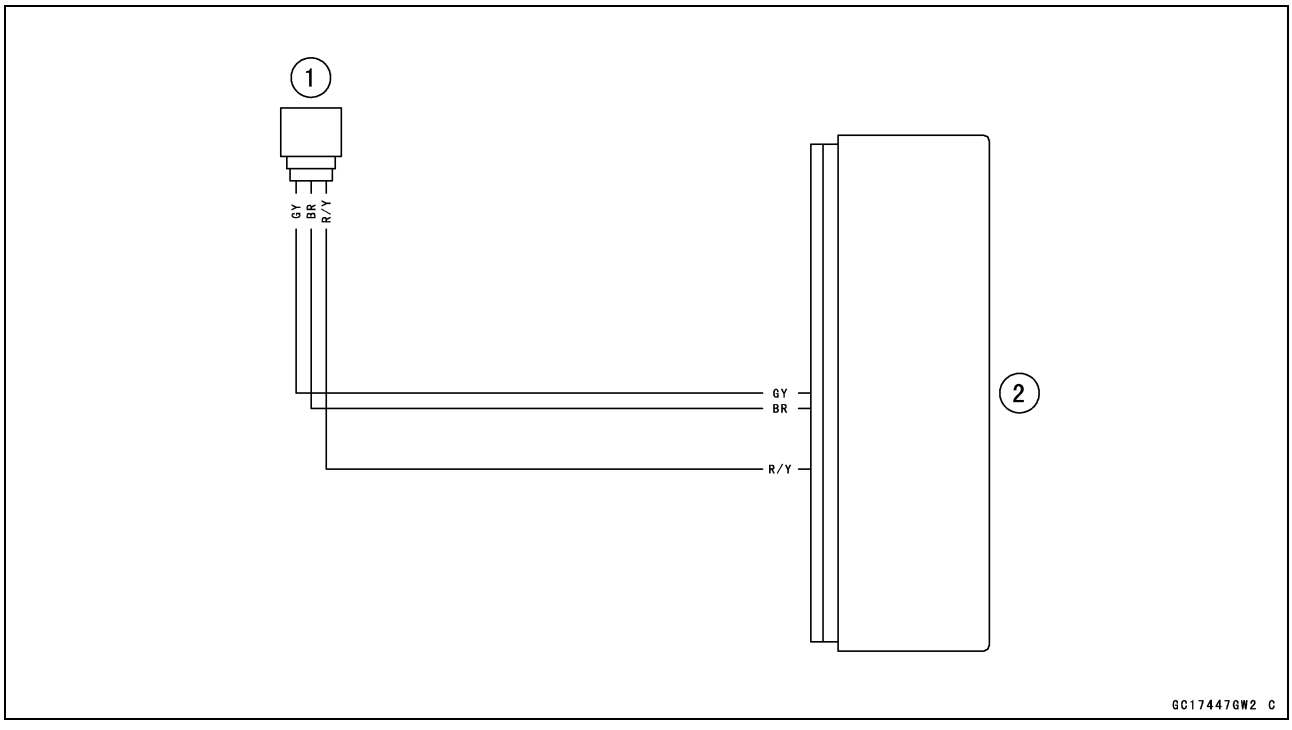

1. Vehicle-down Sensor
2. ECU

Fuel Injector (Service Code 41)

NOTICE
Never drop the fuel injector, especially on a hard surface. Such a shock to the injector can damage it.

Fuel Injector Removal

- Remove:
  Air Cleaner Housing (see Air Cleaner Housing Removal)
  Fuel Tank (see Fuel Tank Removal)
  Fuel Hose (see Fuel Hose Replacement in the Periodic Maintenance chapter)
- Remove the throttle body assy with the throttle cable installed (see Throttle Body Assy Removal).
- Remove the delivery pipe screws [A].
- Remove the delivery pipe assy [B].

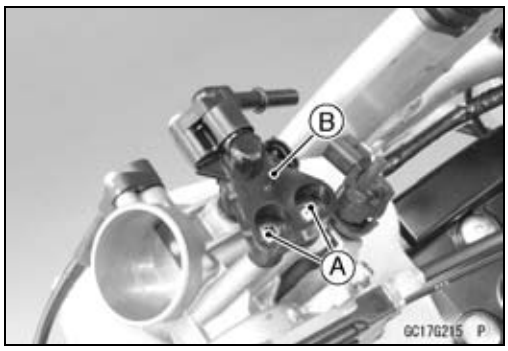

NOTE

○*Do not damage the insertion portions of the injector when they are pulled out from the throttle body.*

- Separate the injector [A] and the delivery pipe [B].

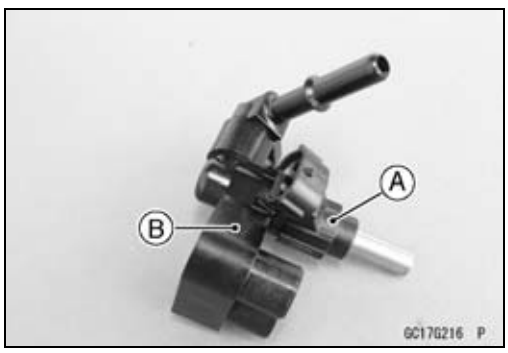

Fuel Injector Installation

- Replace the O-ring [A] and dust seal [B] with a new one.
- Apply engine oil to the O-ring and dust seal.

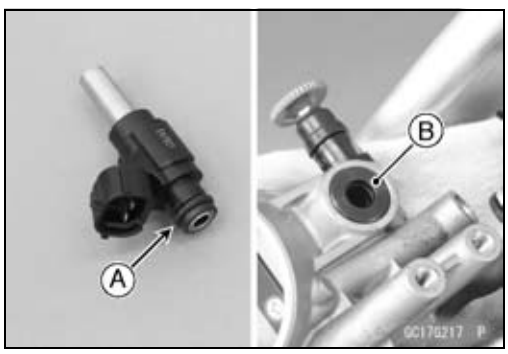

- Assemble the delivery pipe [A] and the fuel injector [B].

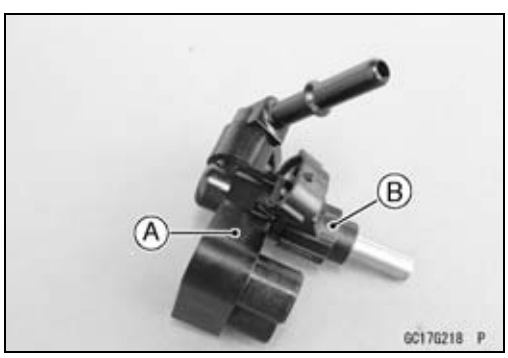

Fuel Injector (Service Code 41)

- Install the delivery pipe assy [A].
- Tighten the delivery pipe screws [B].

Torque - Delivery Pipe Screws: 3.4 N·m (0.35 kgf·m, 30 in·lb)

- Install the removed parts (see appropriate chapters).

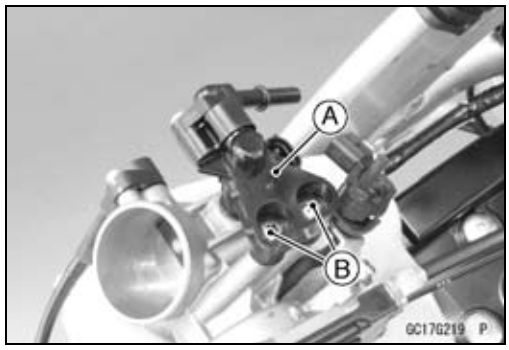

Fuel Injector Audible Inspection

- Start the engine, and let it idle.
- Apply the tip of a screwdriver [A] to the fuel injector [B].
- Put the grip end into your ear, and listen whether the fuel injector is clicking or not.

○A sound scope can also be used.
○The click interval becomes shorter as the engine speed rises.
★If the injector click at a regular intervals, the injector is normal.

- Stop the engine.

★If fuel injector dose not click, check the fuel injector resistance (see Fuel Injector Resistance Inspection).

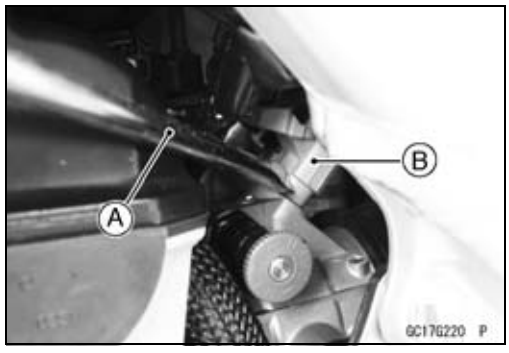

Fuel Injector Resistance Inspection

- Remove:
  Fuel Tank (see Fuel Tank Removal)
  Fuel Injector Connector [A]

- Connect a digital meter [A] to the injector terminals.
- Measure the fuel injector resistance.

Fuel Injector Resistance
Connections: R/W terminal ←→ BL/R terminal

Standard: About 11.5 ~ 12.5 Ω @20°C (68°F)

★If the reading is out of the standard, replace the injector.
★If the reading is within the standard, check the power supply voltage (see Fuel Injector Power Supply Voltage Inspection).

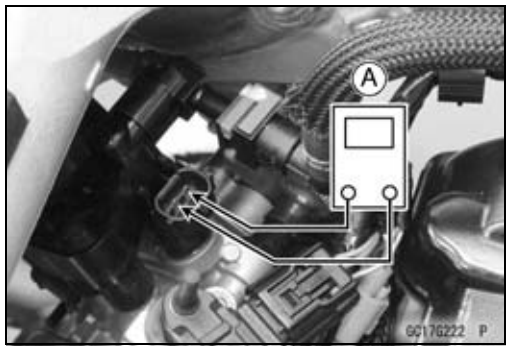

Fuel Injector (Service Code 41)

Fuel Injector Power Supply Voltage Inspection

NOTE

○*Be sure the battery is fully charged.*

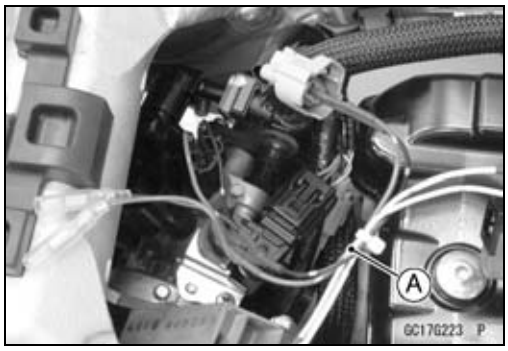

- Disconnect the injector connector and connect the measuring adapter [A] between these connectors.
  Main Harness [B]
  Fuel Injector [C]

Special Tool - Measuring Adapter: 57001-1700

- Connect a digital meter [D] to the measuring adapter lead.

Fuel Injector Power Supply Voltage
Connect the Adapter:
Digital Meter (+) → R (injector R/W) lead
Digital Meter (–) → Battery (–) Terminal

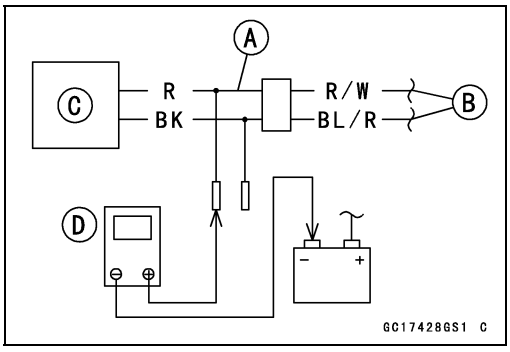

- Refer to the Self-diagnosis Procedures, connect the 12 V battery to the main harness.
- Measure the power supply voltage with the engine stopped.

Power Supply Voltage
Standard: Battery Voltage

★If the voltage is out of the standard, check the power supply wiring (see Fuel Injector Circuit).
★If the reading is within the standard, check the output voltage (see Fuel Injector Output Voltage Inspection).

Fuel Injector (Service Code 41)

Fuel Injector Output Voltage Inspection

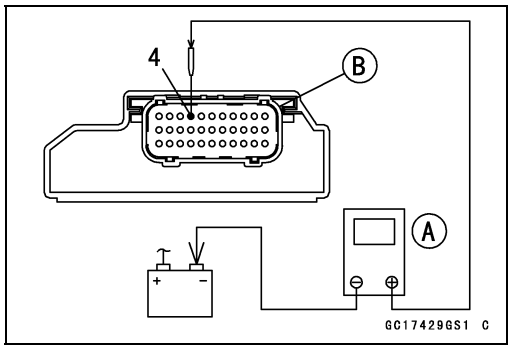

NOTE

○*Be sure the battery is fully charged.*

- Remove the ECU (see ECU Removal).

○Do not disconnect the ECU connector.

- Refer to the Self-diagnosis Procedures, connect the 12 V battery to the main harness.
- Using the needle adapter set, connect a digital meter [A] to the ECU connector [B].

Special Tool - Needle Adapter Set: 57001-1457

Fuel Injector Output Voltage
Connections to ECU Connector:
Digital Meter (+) → BL/R lead (ECU Terminal 4)
Digital Meter (–) → Battery (–) Terminal

- Measure the output with the engine stopped with the connector jointed.

Output Voltage
Standard: Battery Voltage

- Disconnect the power supply harness.

★If the reading is within the standard, check the ECU for its ground and power supply (see ECU Power Supply Inspection)

★If the ground and power supply are good, replace the ECU (see ECU Removal/Installation).

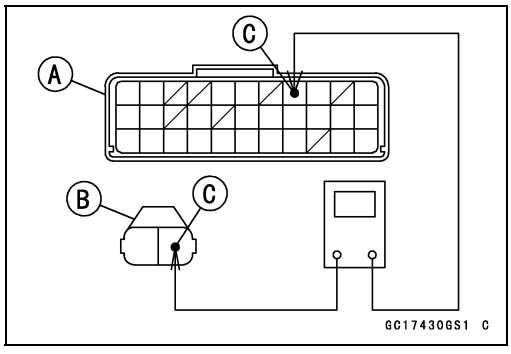

★If the reading is out of the standard, remove the ECU and check the wiring for continuity between the main harness connectors.

○Disconnect the ECU and the fuel injector connector.

Wiring Continuity Inspection
ECU Connector [A] ← → Fuel Injector Connector [B]
BL/R lead [C] (ECU terminal 4)

★If the wiring good, check the ECU ground and power supply (see ECU Power Supply Inspection).

★If the ground and power supply are good, replace the ECU (see ECU Removal/Installation).

Injector Fuel Line Inspection

- Remove:
  Fuel Tank (see Fuel Tank Removal)
  Fuel Hose (see Fuel Hose Replacement in the Periodic Maintenance chapter)

○Place a piece of cloth around the fuel outlet pipe of fuel pump and the delivery pipe of throttle body assy.

Fuel Injector (Service Code 41)

- Check the injector fuel line for leakage as follows:
  - ○Connect a commercially available vacuum/pressure pump [A] to the delivery pipe [B] with the fuel hose [C].
  - ○Hold both ends with the clamps [D].
- Apply a soap and water solution to the areas [E] as shown.
- Watching the pressure gauge, squeeze the pump lever [F], and build up the pressure until the pressure reaches the maximum pressure.

Fuel Line Maximum Pressure
Standard: 300 kPa (3.06 kgf/cm², 44 psi)

NOTICE
During pressure testing, do not exceed the maximum pressure for which the system is designed.

- ○Watch the gauge for at least 6 seconds.
- ★If the pressure holds steady, the fuel line is good.
- ★If the pressure drops at once, or if bubbles are found in the area, the fuel line is leaking. Replace the delivery pipe assy, injector and related parts.
- ○Repeat the leak test, and check the fuel line for no leakage.

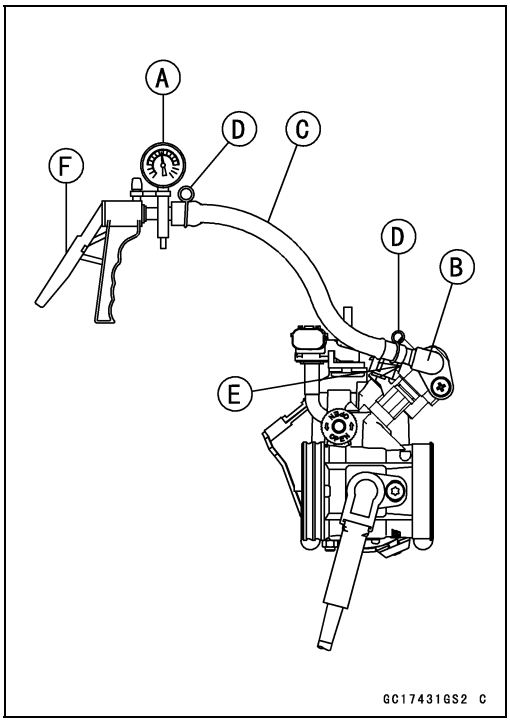

- Install:
  Fuel Hose (see Fuel Hose Replacement in the Periodic Maintenance chapter)
  Fuel Tank (see Fuel Tank Installation)
- Start the engine, check the fuel leakage.

Fuel Injector Circuit

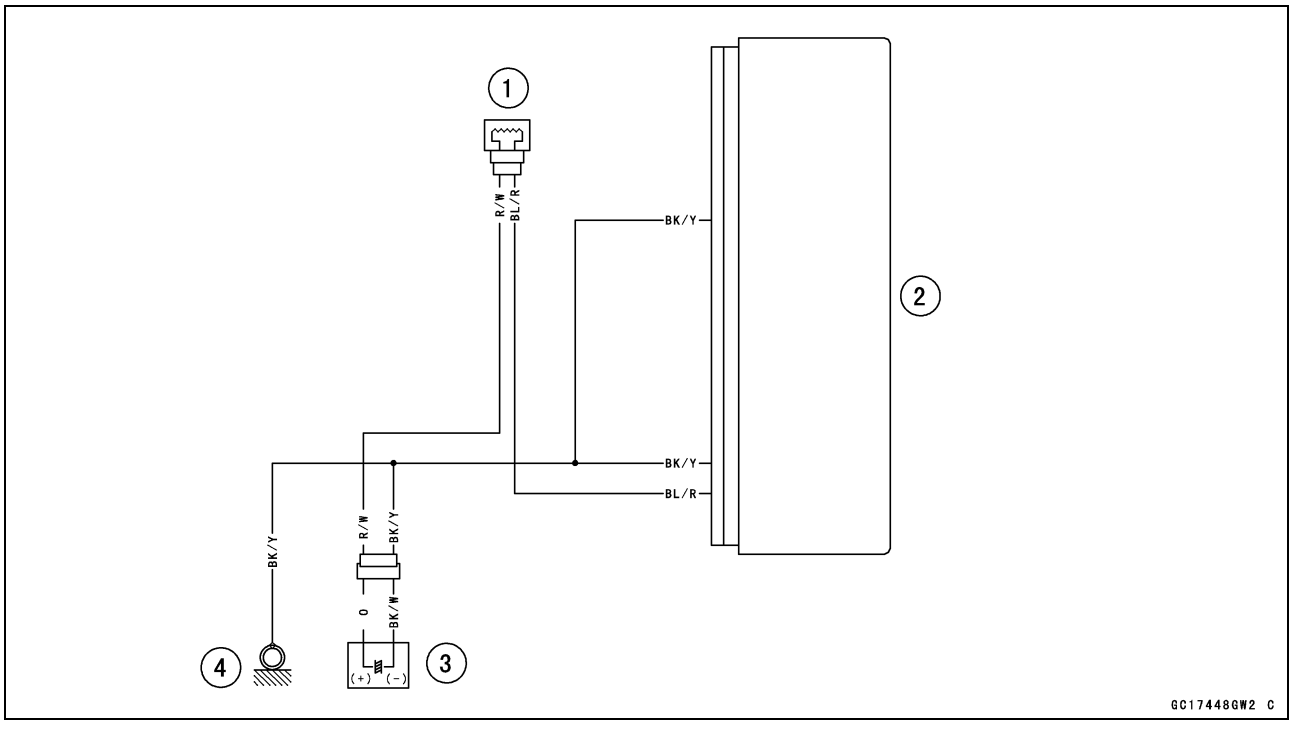

1. Fuel Injector
2. ECU
3. Capacitor
4. Frame Ground 1

Fuel Pump (Service Code 46)

Fuel Pump Removal

⚠ WARNING

Gasoline is extremely flammable and can be explosive under certain conditions. Always stop the engine and do not smoke. Make sure the area is well-ventilated and free from any source of flame or sparks; this includes any appliance with a pilot light.

NOTICE

Never drop the fuel pump, especially on a hard surface. Such a shock to the pump can damage it.

- Draw the fuel out from the fuel tank with a commercially available electric pump.
- Remove the fuel tank (see Fuel Tank Removal).

○Be careful of fuel spillage from the fuel tank since fuel still remains in the fuel tank and fuel pump. Plug the fuel pipe of the fuel tank.

- Turn the fuel tank upside down.
- Loosen the fuel pump bolts evenly following the specified loosening sequence [1 ~ 5], and remove the fuel pump [A].

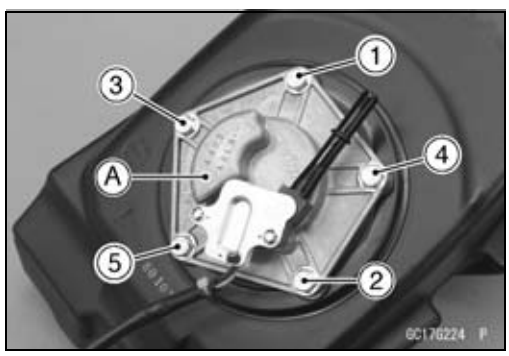

NOTICE

Do not pull the leads of the fuel pump. If they are pulled, the lead terminals may be damaged.

- Discard the fuel pump O-ring [A].

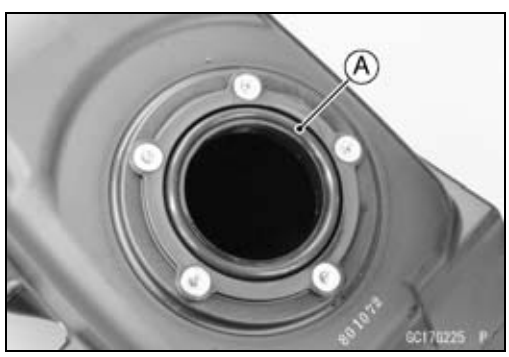

Fuel Pump Installation

- Remove the dirt or dust from the fuel pump [A] by lightly applying compressed air.
- Replace the fuel pump O-ring with a new one.

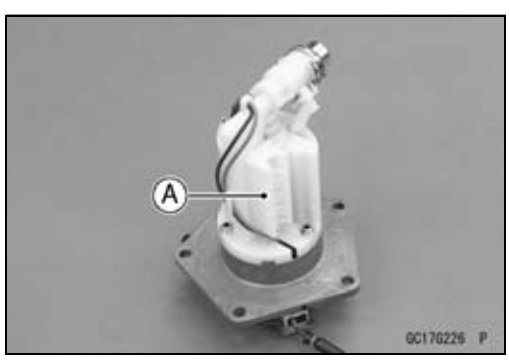

Fuel Pump (Service Code 46)

- Install the fuel pump [A] to the fuel tank.
- Apply a non-permanent locking agent to the threads of the fuel pump bolts.
- Gradually tighten the fuel pump bolts evenly following the specified tightening sequence [1 ~ 6].

  Torque - Fuel Pump Bolts: 10 N·m (1.0 kgf·m, 89 in·lb)
- Install the removed parts (see appropriate chapters).

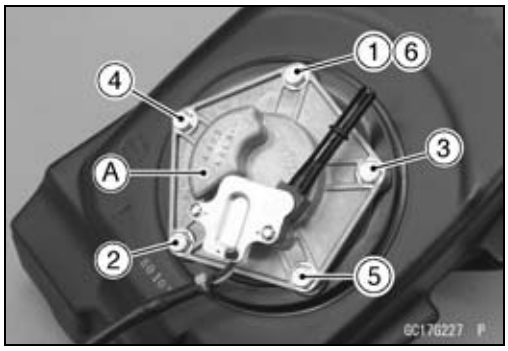

Fuel Pump Operation Inspection

NOTE

○*Be sure the battery is fully charged.*

- Refer to the Self-diagnosis Procedures, connect the 12 V battery to the main harness.
- Make sure that the fuel pump operates (make light sounds) for 5 seconds, and then stops.
- Disconnect the power supply harness.

★If the pump does not operate as described above, check the operating voltage (see Fuel Pump Operating Voltage Inspection).

Fuel Pump Operating Voltage Inspection

NOTE

○*Be sure the battery is fully charged.*

- Remove the left radiator shroud (see Radiator Shroud Removal in the Frame chapter).
- Disconnect the fuel pump lead connector and connect the measuring adapter [A] between these connectors.
  Main Harness [B]
  Fuel Pump [C]

  Special Tool - Measuring Adapter: 57001-1700
- Connect a digital meter [D] to the measuring adapter leads.

  Fuel Pump Operating Voltage
  Connections to Adapter:
  Digital Meter (+) → R (pump R) lead
  Digital Meter (–) → BK (pump BK) lead

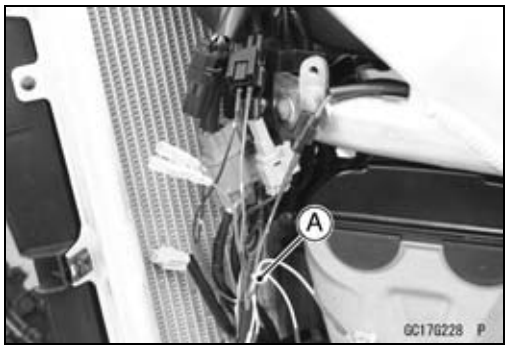

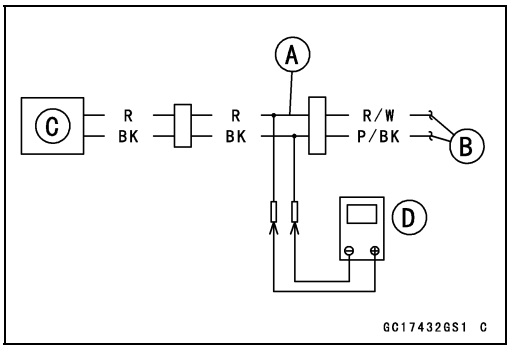

- Refer to the Self-diagnosis Procedures, connect the 12 V battery to the main harness.

Fuel Pump (Service Code 46)

- Measure the operating voltage with engine stopped and with the connector joined.

Operating Voltage
Standard: Battery Voltage

★If the reading is not battery voltage, check the wiring for continuity (see Fuel Pump Circuit).
★If the wiring is good, check the ECU for its ground and power supply (see ECU Power Supply Inspection).
★If the ground and power supply are good, replace the ECU (see ECU Removal/Installation).
★If the reading is in specification, but the fuel pump does not operate, replace the fuel pump (see Fuel Pump Removal/Installation).

Pressure Regulator Removal

○The pressure regulator [A] is built into the fuel pump and can not be removed.

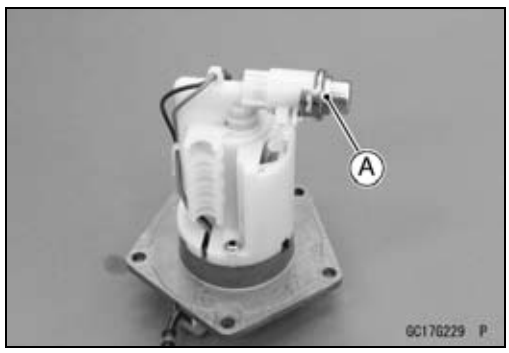

Fuel Filter Cleaning

○The fuel filter [A] is built into the pump and can not be cleaned or checked.
★If the fuel filter is suspected of clogging or being damaged, replace it with the fuel pump as a set.

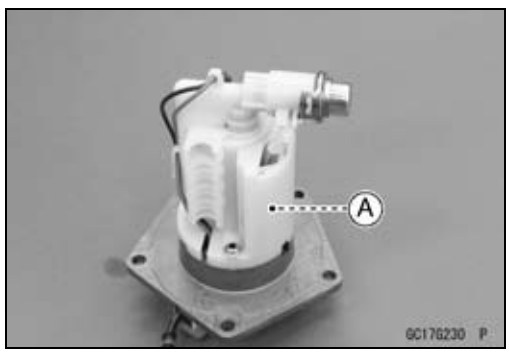

Fuel Pump (Service Code 46)

Fuel Pump Circuit

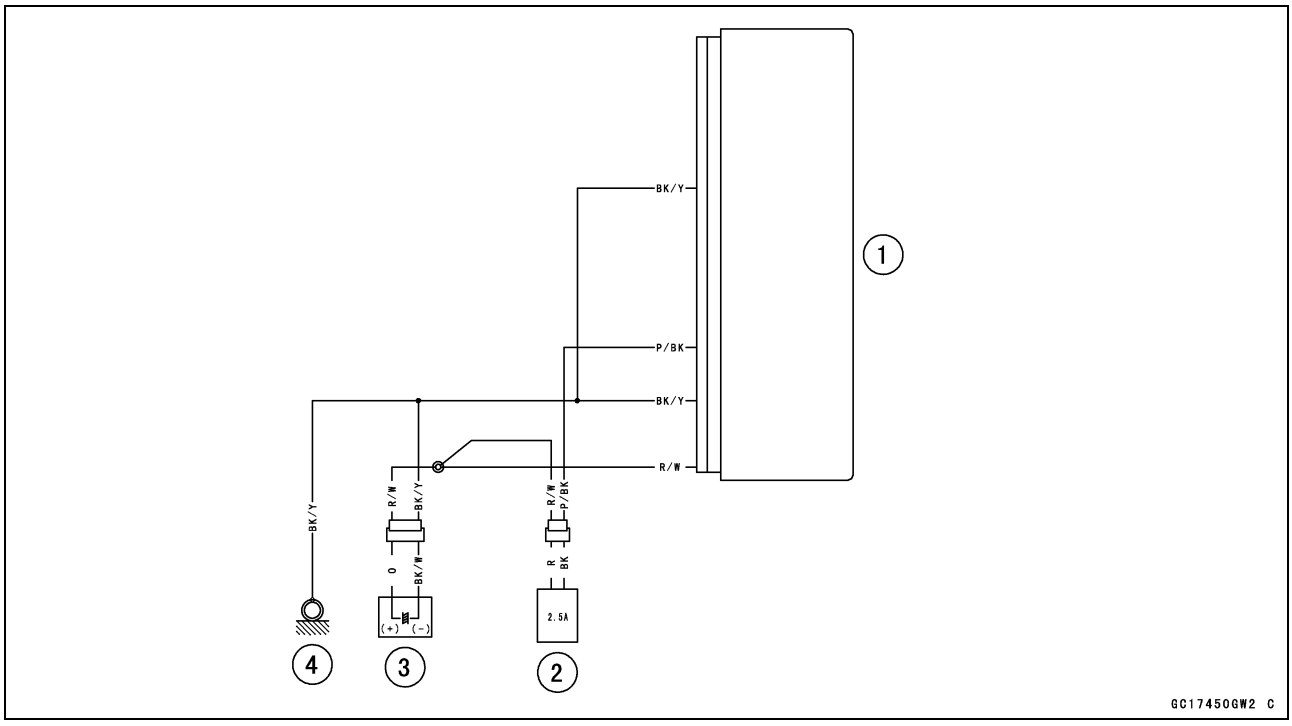

1. ECU
2. Fuel Pump
3. Capacitor
4. Frame Ground 1

Ignition Coil (Service Code 51)

Ignition Coil Removal/Installation

- Refer to the Ignition Coil Removal/Installation in the Electrical System chapter.

Ignition Coil Primary Peak Voltage Inspection

- Refer to the Ignition Coil Primary Peak Voltage Check in the Electrical System chapter.

★If the peak voltage is mach lower than standard, check the wiring for continuity (see Ignition Coil Circuit).

★If the wiring is good, check the ECU for its ground and power supply (see ECU Power Supply Inspection).

★If the ground and power supply are good, replace the ECU (see ECU Removal/Installation).

Ignition Coil Circuit

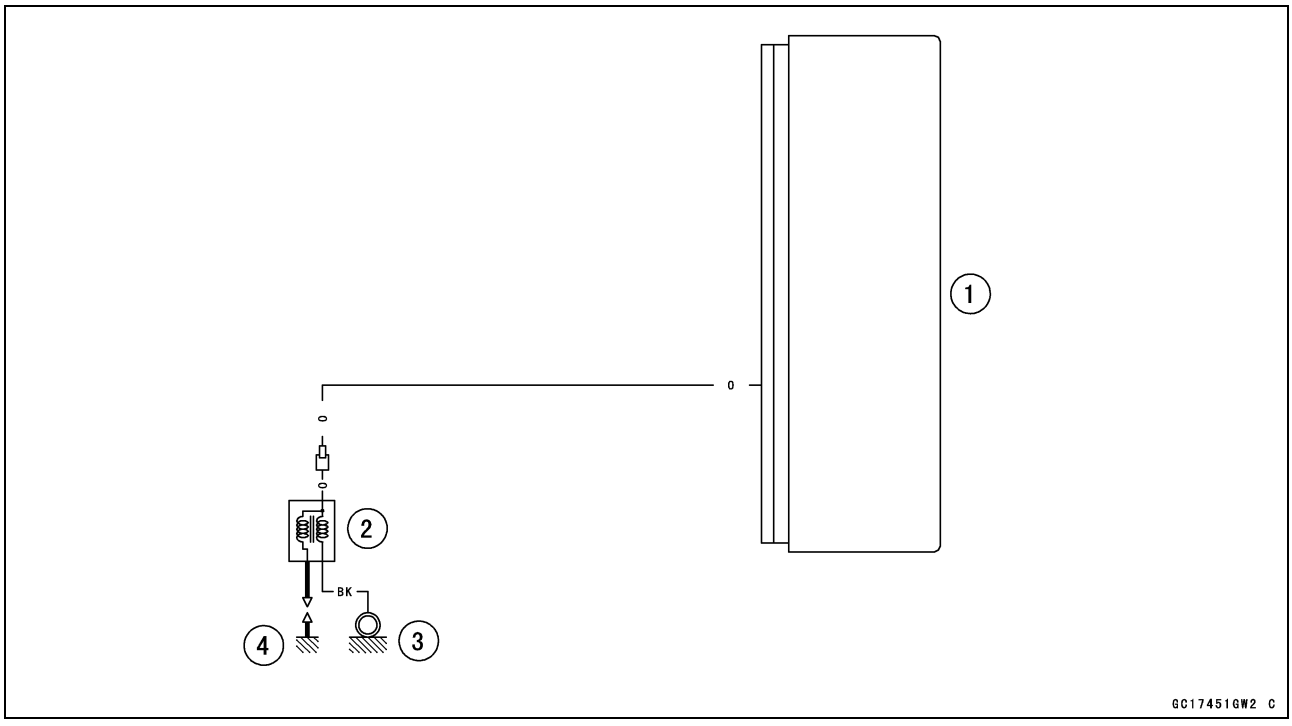

1. ECU
2. Ignition Coil
3. Frame Ground 2
4. Spark Plug

Orange FI Warning Indicator Light (LED)

Orange FI Warning Indicator Light (LED) Inspection

NOTE

○*Be sure the battery is fully charged.*

- Refer to the Self-diagnosis Procedures, connect the 12 V battery to the main harness.
- Confirm that the orange FI warning indicator light (LED) goes on for 2 seconds when the battery connected to the main harness.

★If the orange FI warning indicator light (LED) does not go on, check the wiring for continuity between the main harness.

○Disconnect the capacitor and the launch control mode button connectors.

Wiring Continuity Inspection
Capacitor Connector [A] ←→
Launch Control Mode Button Connector [B]
O/Y lead [C] ←→ R/W lead [D]

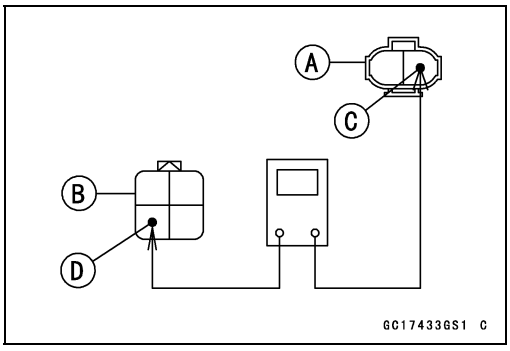

○Disconnect the ECU connector.

Wiring Continuity Inspection
ECU Connector [A] ←→
Launch Control Mode Button Connector [B]
BL/W lead (ECU Terminal 7) [C]

★If the wiring is good, check the orange FI warning indicator light (LED).

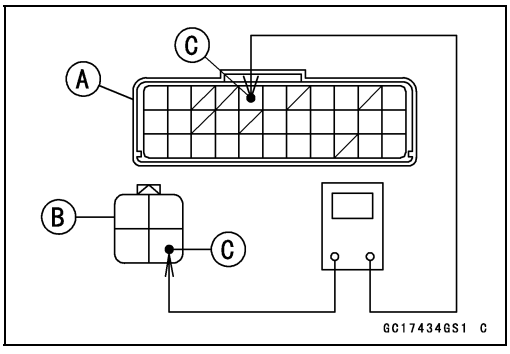

- Connect the 12 V battery [A] to the launch control mode button connector [B] as shown in the figure.

★If the orange FI warning indicator light (LED) does not go on, replace the launch control mode button.

★If the orange FI warning indicator light (LED) goes on, check the ECU for its ground and power supply (see ECU Power Supply Inspection).

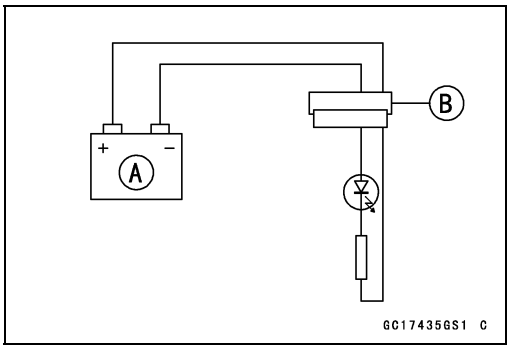

Orange FI Warning Indicator Light (LED)

Orange FI Warning Indicator Light (LED) Circuit

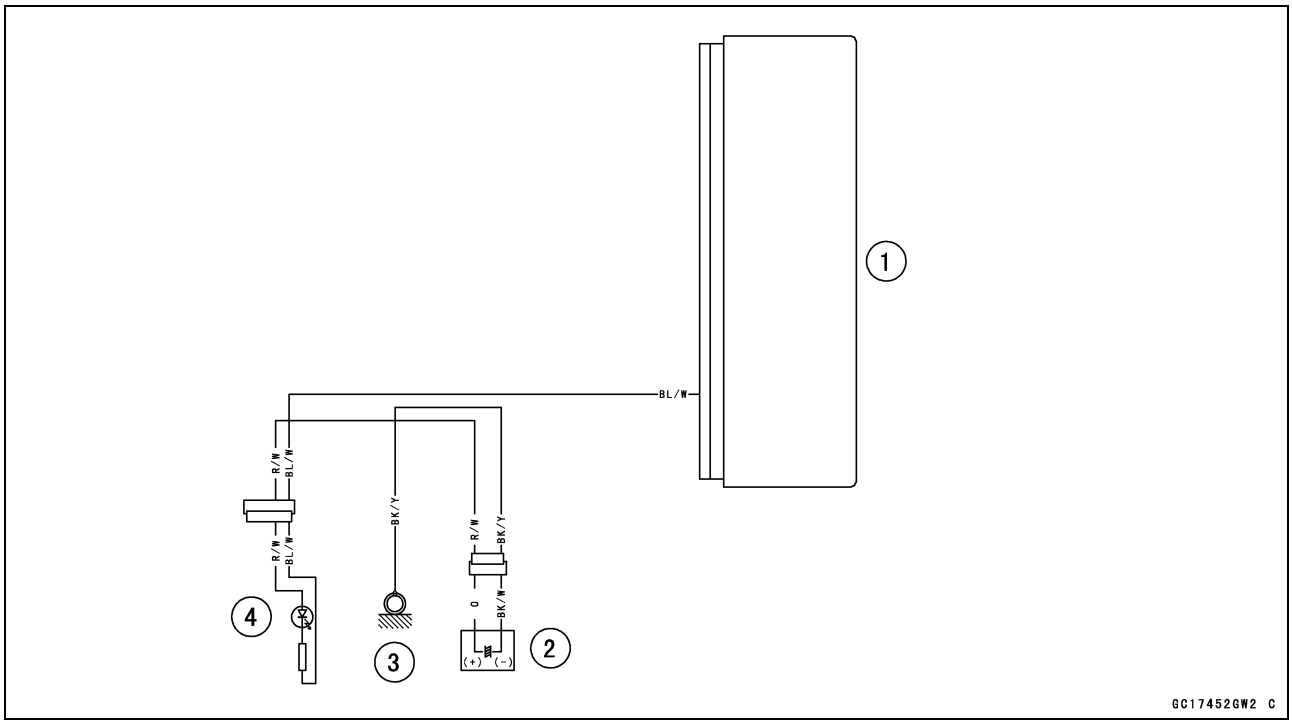

1. ECU
2. Capacitor
3. Frame Ground 1
4. Orange FI Warning Indicator Light (LED)

ECU

ECU Identification

○Most countries have their own regulations, so each ECU has different characteristic. So, do not confuse ECU with each other and use only the ECU for your model. Otherwise, the motorcycle cannot clear the regulation.

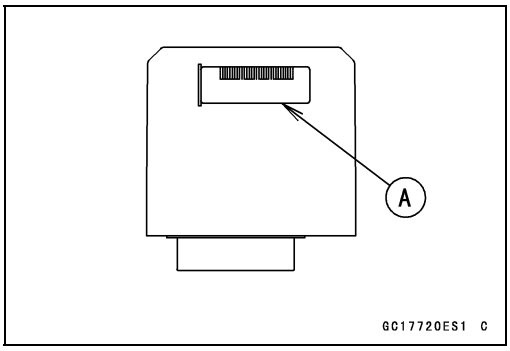

ECU Identification

Part Number [A]	Specification
21175-1106	US, CA
21175-1107	AU, EUR
21175-1108	BR

ECU Removal

NOTICE
Never drop the ECU, especially on a hard surface. Such a shock to the ECU can damage it.

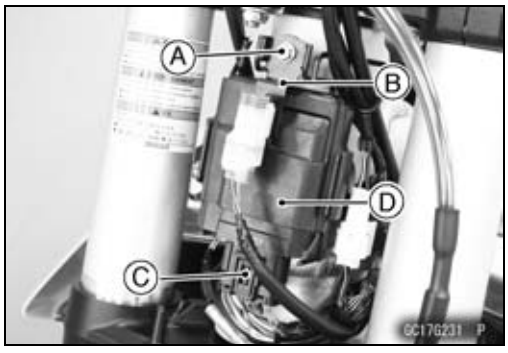

- Remove:
  Number Plate (see Number Plate Removal in the Frame chapter)
  Diagnostic Connector Bracket Bolt [A]
  Connector Bracket [B]
- Disconnect the ECU connector [C].
- Pull the ECU [D] together with rubber protector.

ECU Installation

- Install the ECU [A] to the rubber protector [B].

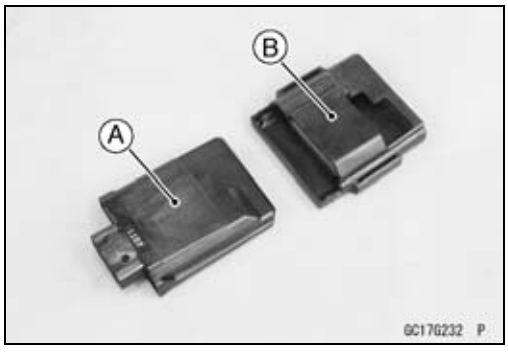

- Insert the slits [A] of the rubber protector to the ECU bracket.
- Connect the ECU connector [B].
- Install the connector bracket.
- Tighten:

  Torque - Diagnostic Connector Bracket Bolt: 5.0 N·m (0.51 kgf·m, 44 in·lb)

- Install the number plate (see Number Plate Installation in the Frame chapter).

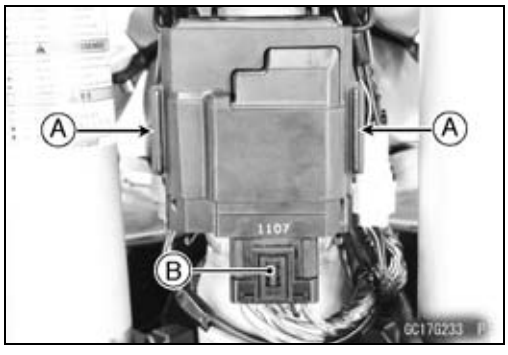

ECU

ECU Power Supply Inspection

- Remove the number plate (see Number Plate Removal in the Frame chapter).
- Visually inspect the ECU connector.

★If the connector is clogged with mud or dust, blow it off with compressed air.

- Remove the ECU (see ECU Removal).
- Visually inspect the terminals [A] of the ECU connectors.

★If the terminals of the main harness connector are damaged, replace the main harness.

★If the terminals of the ECU connector are damaged, replace the ECU.

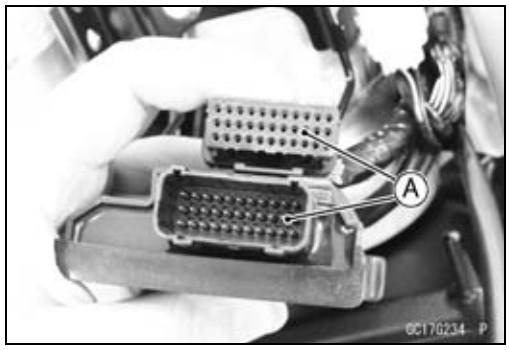

- Disconnect the capacitor lead connector [A].

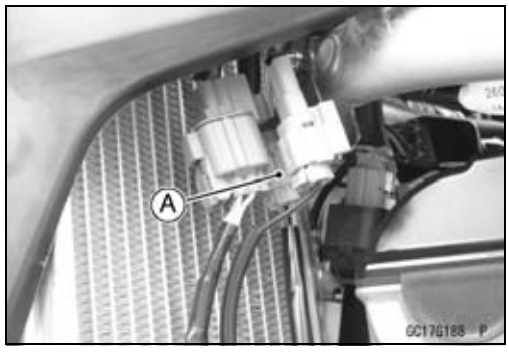

- Set a digital meter [A] and check the following wiring for continuity.

ECU Grounding Inspection
Capacitor Connector [B] (BK/Y lead) ←→
ECU Connector [C]
BK/Y lead [D] (ECU Terminal 6)
BK/Y lead [E] (ECU Terminal 22)
BK/W lead [F] (ECU Terminal 33)
Criteria: 0 Ω

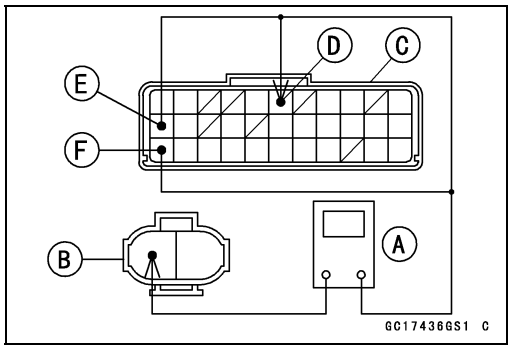

★If no continuity, check the connector or main harness, and repair or replace them if necessary.

★If the wiring is good, check the power supply voltage of the ECU.

NOTE

○*Be sure the battery is fully charged.*

- Connect the ECU connector.
- Refer to the Self-diagnosis Procedures, connect the 12 V battery to the main harness.

ECU

- Connect a digital meter [A] to the ECU connector [B] with the needle adapter set.

  Special Tool - Needle Adapter Set: 57001-1457

  ECU Power Supply Inspection

  Connections:

  Digital Meter (+) → R/W lead (ECU Terminal 1)

  Digital Meter (–) → Battery (–) Terminal

  Standard:

  When battery is not connected: DC 0 V

  When battery is connected: Battery Voltage

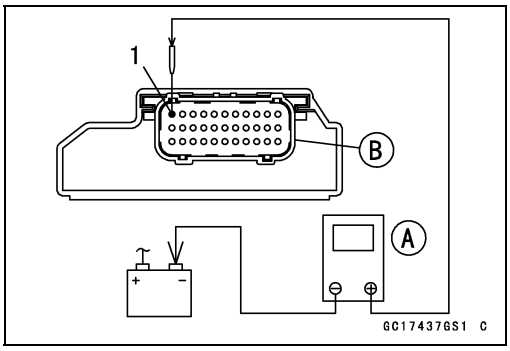

★If the reading is out of the specification, check the following.

Power Supply Wiring (see ECU Power Supply Circuit)

★If the wiring is good, replace the ECU (see ECU Removal/Installation).

ECU Power Supply Circuit

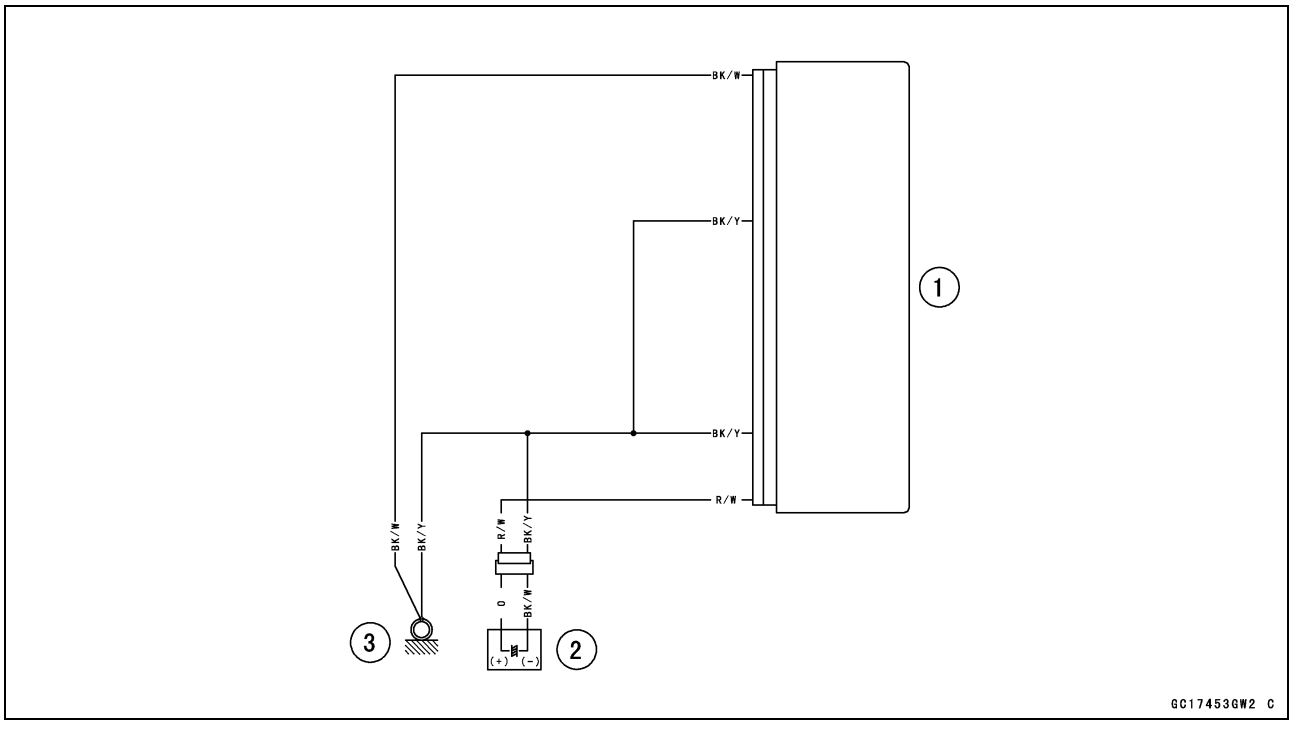

1. ECU
2. Capacitor
3. Frame Ground 1

Fuel Line

Fuel Pressure Inspection

NOTE

○*Be sure the battery is fully charged.*

- Remove:
  Fuel Tank (see Fuel Tank Removal)
  Fuel Hose (see Fuel Hose Replacement in the Periodic Maintenance chapter)

○Be sure to place a piece of cloth around the fuel outlet pipe of the fuel pump and the delivery pipe of the throttle body assy.

⚠ WARNING

Fuel is flammable and explosive under certain conditions and can cause severe burns. Be prepared for fuel spillage; any spilled fuel must be completely wiped up immediately. When the fuel hose is disconnected, fuel spills out from the hose and the pipe because of residual pressure. Cover the hose connection with a piece of clean cloth to prevent fuel spillage.

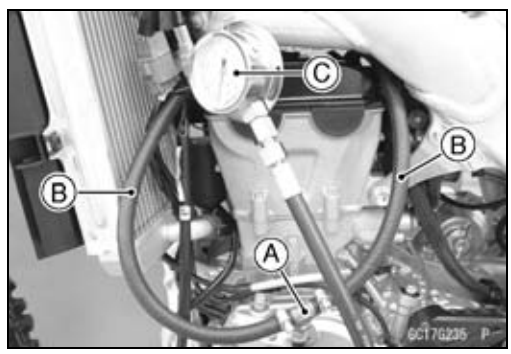

- Install the fuel pressure gauge adapter [A] and fuel hoses (Special Tool: 57001-1607) [B] between the fuel pump and the throttle body assy.
- Secure the fuel hoses with the clamps.
- Connect the pressure gauge [C] to the fuel pressure gauge adapter.

Special Tools - Oil Pressure Gauge, 5 kgf/cm²: 57001-125
Fuel Pressure Gauge Adapter: 57001-1593
Fuel Hose: 57001-1607

⚠ WARNING

Fuel is extremely flammable and can be explosive under certain conditions resulting in serious injury or death. Do not try to start the engine with the fuel hoses disconnected.

- Connect the fuel pump lead connector.
- Refer to the Self-diagnosis Procedures, connect the 12 V battery to the main harness.

NOTE

○*Inspect the fuel leakage from the connected portion of the special tools.*

NOTICE

Do not drive the fuel pump without the fuel in the fuel tank. If the fuel pump is driven without the fuel, it may be damaged.

Fuel Line

- Start the engine, and let it idle.
- Measure the fuel pressure with the engine idling.

Fuel Pressure
Standard: 294 kPa (3.0 kgf/cm², 43 psi) with engine idling

NOTE

○*The gauge needle will fluctuate. Read the pressure at the average of the maximum and minimum indications.*

- Stop the engine.

★If the fuel pressure is much higher than specified, replace the fuel pump because the fuel pressure regulator in the fuel pump have been clogged or stuck.

★If the fuel pressure is much lower than specified, check the following.
Fuel Line Leakage (see Injector Fuel Line Inspection)
Amount of Fuel Flow (see Fuel Flow Rate Inspection)

- After above checks, measure the fuel pressure again.
- Remove the fuel pressure gauge, hoses and adapter.
- Install the removed parts (see appropriate chapters).
- Start the engine and check for fuel leakage.

Fuel Flow Rate Inspection

⚠ WARNING

Gasoline is extremely flammable and can be explosive under certain conditions. Always stop the engine and do not smoke. Make sure the area is well-ventilated and free from any source of flame or sparks; this includes any appliance with a pilot light.

NOTE

○*Be sure the battery is fully charged.*

- Wait until the engine cools down.
- Prepare the fuel hose (Special Tool: 57001-1607) and a measuring cylinder.

Special Tool - Fuel Hose: 57001-1607

- Remove the fuel tank bolt and tank mounting band (see Fuel Tank Removal).

Fuel Line

- Open the fuel tank cap [A] to lower the pressure in the tank.
- Disconnect the fuel hose from the fuel pump (see Fuel Tank Removal).

○Be sure to place a piece of cloth around the fuel outlet pipe of the fuel pump.

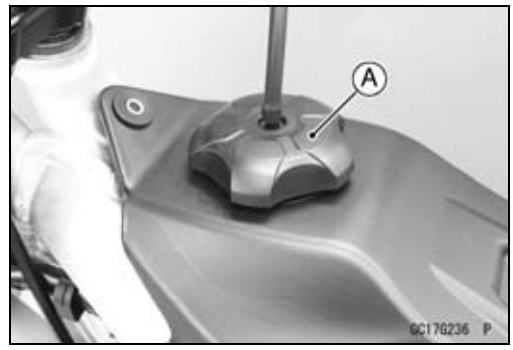

⚠ WARNING

Fuel is flammable and explosive under certain conditions and can cause severe burns. Be prepared for fuel spillage; any spilled fuel must be completely wiped up immediately. When the fuel hose is disconnected, fuel spills out from the hose and the pipe because of residual pressure. Cover the hose connection with a piece of clean cloth to prevent fuel spillage.

- Connect the prepared fuel hose [A] to the fuel outlet pipe.
- Secure the fuel hose with a clamp.
- Insert the fuel hose into the measuring cylinder [B].

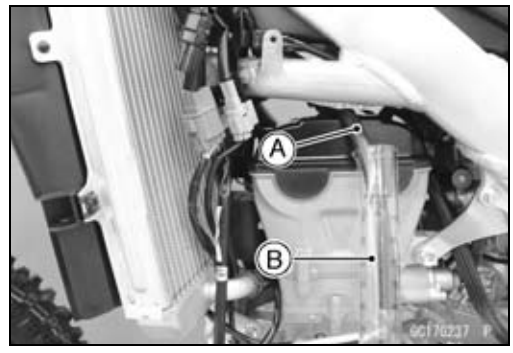

⚠ WARNING

Wipe off spilled out fuel immediately.
Be sure to hold the measuring cylinder vertical.

- Close the fuel tank cap.

- Refer to the Self-diagnosis Procedures, connect the 12 V battery to the main harness.

○Then the fuel pump operates and fuel is discharged.

NOTICE

Do not operate the fuel pump without fuel in the fuel tank. If the fuel pump is driven without fuel, it may be damaged.

- Measure the discharge for 3 seconds.

○Repeat this operation several times.

Amount of Fuel Flow
Standard: 33 mL (1.1 US oz.) or more for 3 seconds

★If the fuel flow is much less than the specified, replace the fuel pump (see Fuel Pump Removal/Installation).

- Install the fuel tank (see Fuel Tank Installation).
- Start the engine and check for fuel leakage.

Throttle Grip and Cable

If the throttle grip has excessive free play due to cable stretch or misadjustment, there will be a delay in throttle response. Also, the throttle valve may not open fully at full throttle. On the other hand, if the throttle grip has no play, the throttle will be hard to control, and the idle speed will be erratic. Check the throttle grip play periodically in accordance with the Periodic Maintenance Chart, and adjust the play if necessary.

The throttle cable routing is shown in Cable, Wire, and Hose Routing section in the Appendix chapter.

Throttle Grip (Throttle Cable) Free Play Inspection

- Refer to the Throttle Grip Free Play Inspection in the Periodic Maintenance chapter.

Throttle Grip (Throttle Cable) Free Play Adjustment

- Refer to the Throttle Grip Free Play Adjustment in the Periodic Maintenance chapter.

Throttle Cable Replacement

- Remove the front master cylinder (see Front Master Cylinder Removal in the Brakes chapter).
- Slide out the dust covers [A].
- Remove:
  Throttle Cable Housing Screws [B]
  Throttle Cable Housings [C]

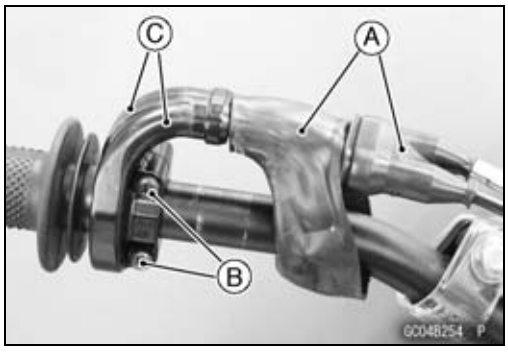

- Free the tips [A] from the grip [B].

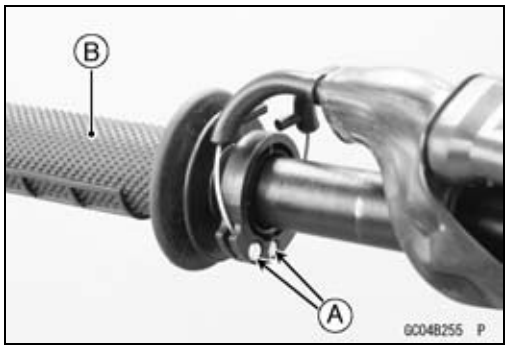

- Remove:
  Throttle Body Assy (see Throttle Body Assy Removal)
  Throttle Pulley Cover Bolts [A]
  Throttle Pulley Cover [B]

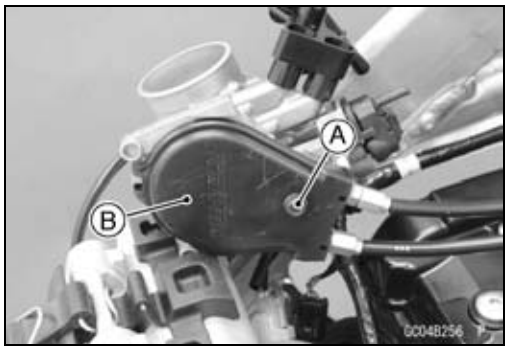

Throttle Grip and Cable

- Loosen:
  Decelerator Cable Bolt Locknut [A]
  Accelerator Cable Bolt [B]
- Take the cables [C] off the throttle body assy.
- Free the throttle cable tips [D] from the pulley.
- Remove the throttle cables.

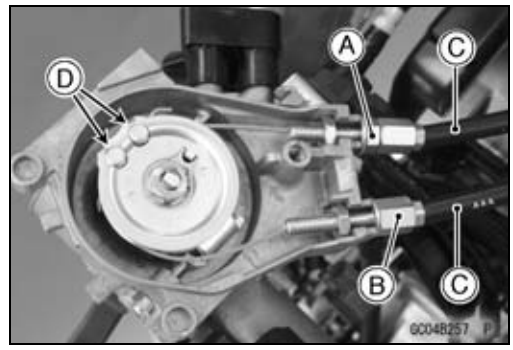

- Lubricate the throttle cables (see Lubrication in the Periodic Maintenance chapter).
- Apply grease to the throttle cable tips.
- Install:
  Throttle Cable Tips
  Throttle Cable Holders [A]

○The bent side [B] of the holders faces inside as shown.

- Tighten:

Torque - Accelerator Cable Bolt [C]: 3.0 N·m (0.31 kgf·m, 27 in·lb)
Decelerator Cable Bolt Locknut [D]: 3.0 N·m (0.31 kgf·m, 27 in·lb)

2 ±1 mm (0.08 ±0.04 in.) [E]

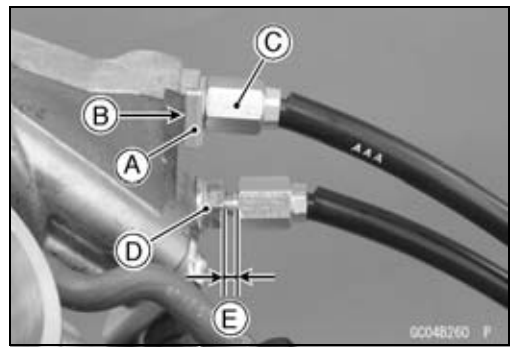

- Insert the projection [A] of the throttle body to the hole [B] of throttle pulley cover, and install the throttle pulley cover.
- Tighten:

Torque - Throttle Pulley Cover Bolts [C]: 4.0 N·m (0.41 kgf·m, 35 in·lb)

- Install the removed parts (see appropriate chapters).

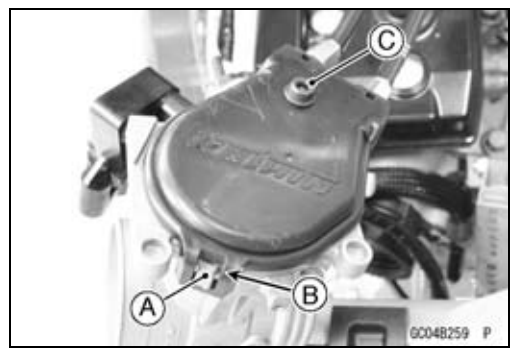

- Install the throttle cables in accordance with the Cable, Wire, and Hose Routing section in the Appendix chapter.
- After the installation, adjust each cable properly (see Throttle Grip Free Play Adjustment in the Periodic Maintenance chapter).

⚠ WARNING

Operation with an improperly adjusted, incorrectly routed or damaged cables could result in an unsafe riding condition. Follow the service manual to make sure to correct any of these conditions.

Throttle Cable Lubrication

- Whenever the throttle cable is removed or in accordance with the Periodic Maintenance Chart, lubricate the these cables (see Lubrication in the Periodic Maintenance chapter).

○Apply a thin coating of grease to the cable upper end.
○Use a commercially available pressure cable lubricator to lubricate these cables.

Throttle Grip and Cable

Throttle Cable Inspection

- Refer to the Cable Inspection in the Periodic Maintenance chapter.

Throttle Body Assy

Idle Speed Inspection

- Refer to the Idle Speed Inspection in the Periodic Maintenance chapter.

Throttle Bore Cleaning

- Refer to the Throttle Body Cleaning in the Periodic Maintenance chapter.

Throttle Body Assy Removal

⚠ WARNING

Gasoline is extremely flammable and can be explosive under certain conditions. Always stop the engine and do not smoke. Make sure the area is well-ventilated and free from any source of flame or sparks; this includes any appliance with a pilot light.

NOTICE

Never drop the throttle body assy, especially on a hard surface. Such a shock to the throttle body assy can damage it.

- Remove:
  Fuel Tank (see Fuel Tank Removal)
  Fuel Hose (see Fuel Hose Replacement in the Periodic Maintenance chapter)
  Air Cleaner Housing (see Air Cleaner Housing Removal)

- Disconnect:
  Intake Air Pressure Sensor Connector [A]
  Throttle Sensor Connector [B]
  Fuel Injector Connector [C]

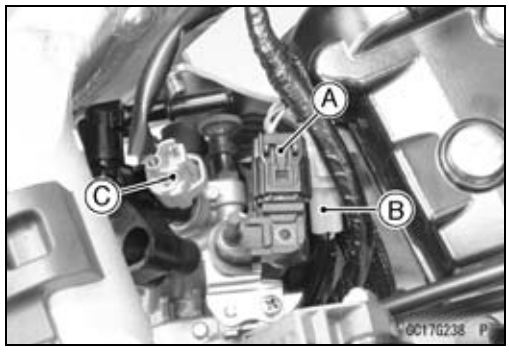

- Loosen the throttle body assy clamp bolt [A].

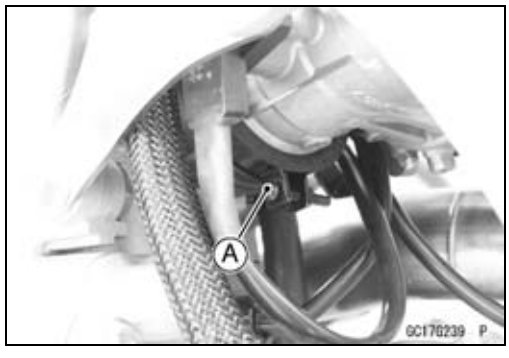

Throttle Body Assy

- Take the throttle body assy [A] off the engine as shown.
- Remove the throttle cable lower ends (see Throttle Cable Replacement).

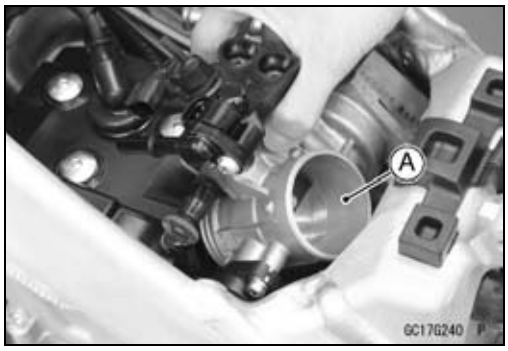

Throttle Body Assy Installation

- Install the throttle body assy.
- Tighten:

Torque - Throttle Body Assy Clamp Bolt: 2.0 N·m (0.20 kgf·m, 18 in·lb)

○Engage the projection [A] and the hollow [B].

- Install the removed parts (see appropriate chapters).

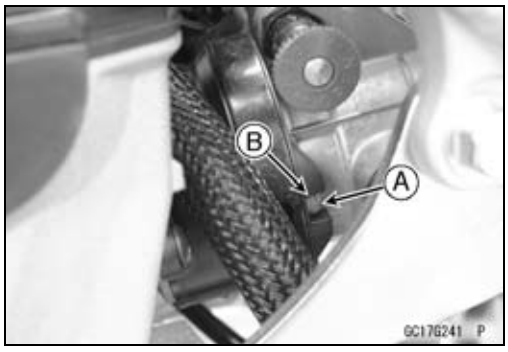

NOTE

○*For easily starting the engine, connect the 12 V battery to the main harness (see Self-diagnosis Procedures).*

○*When the battery is connected, the fuel pump is driven and the pressure of the fuel line increases.*

Throttle Body Assy Disassembly

- Remove:
  Throttle Body Assy (see Throttle Body Assy Removal)
  Intake Air Pressure Sensor Bracket Screw [A]
  Intake Air Pressure Sensor Bracket [B]
  Intake Air Pressure Sensor [C]
- Disconnect the vacuum hose [D].

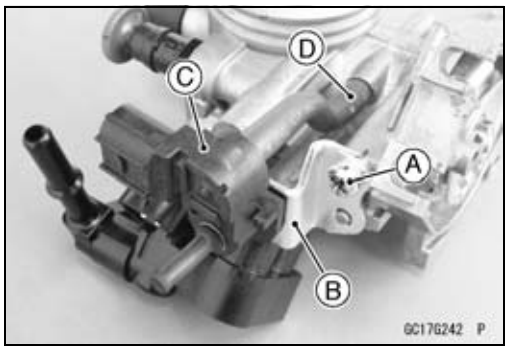

- Remove:
  Delivery Pipe Screws [A]
  Delivery Pipe [B] with Fuel Injector [C]

NOTE

○*Do not damage the insertion portion of the fuel injector when it is pulled out from the throttle body.*

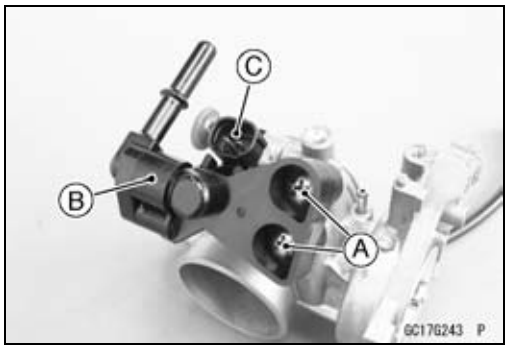

NOTICE
Never drop the fuel injector, especially on a hard surface. Such a shock to the injector can damage it.

Throttle Body Assy

- Separate the injector [A] and the delivery pipe [B].

NOTE

○*Do not damage the insertion portion of the fuel injector when it is pulled out from the delivery pipe.*

NOTICE
Never drop the fuel injector, especially on a hard surface. Such a shock to the injector can damage it.

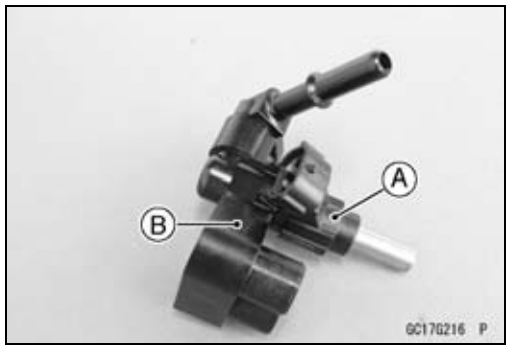

- Remove:
  Delivery Pipe Joint Screw [A]
  Delivery Pipe [B]
  Joint [C]

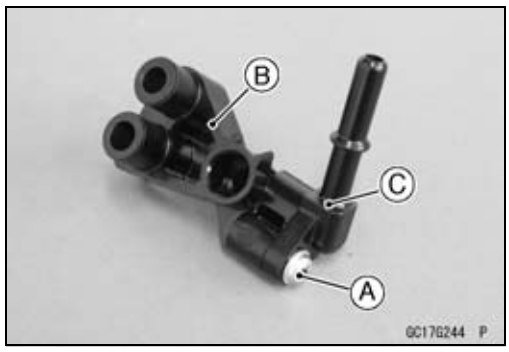

- Remove:
  Idle Adjusting Screw Assy [A]

NOTE

○*If necessary, refer to the Throttle Sensor Replacement and remove the throttle sensor [B].*

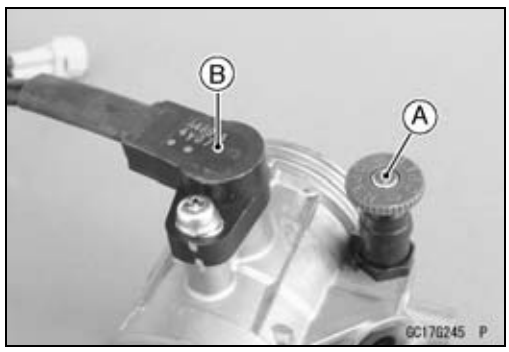

Throttle Body Assy Assembly

NOTE

○*If necessary, refer to the Throttle Sensor Replacement and install the throttle sensor.*

- Tighten the idle adjusting screw assy [A].

Torque - Idle Adjusting Screw Assy: 2.1 N·m (0.21 kgf·m, 19 in·lb)

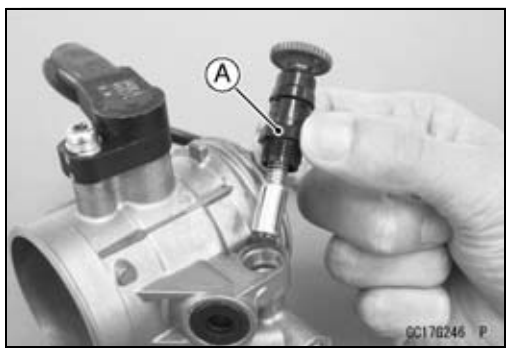

- Replace the O-ring [A] with a new one.
- Apply engine oil to the new O-ring.
- Install the O-ring and the joint [B] to the delivery pipe [C], and tighten the delivery pipe joint screw.

Torque - Delivery Pipe Joint Screw: 3.4 N·m (0.35 kgf·m, 30 in·lb)

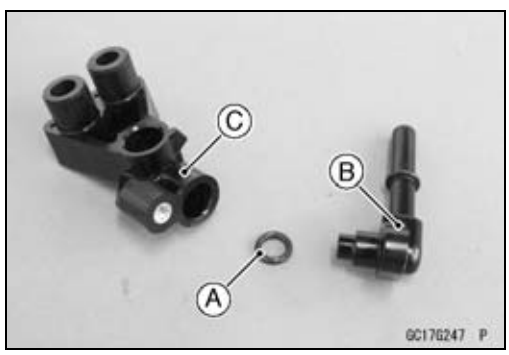

Throttle Body Assy

- Replace the fuel injector O-ring [A] and the dust seal [B] with new ones.
- Apply engine oil to the O-ring and dust seal.

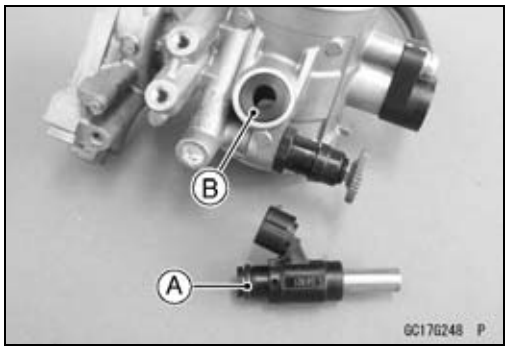

- Install the fuel injector [A] to the delivery pipe [B].

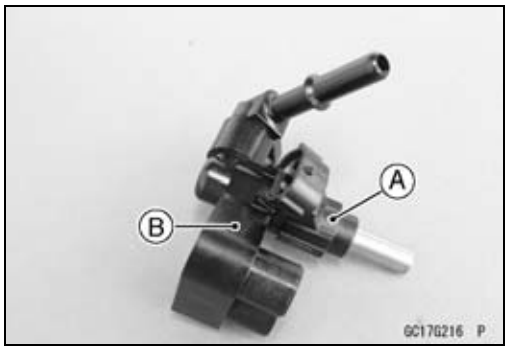

- Install the delivery pipe assy [A].
- Tighten the delivery pipe screws [B].

Torque - Delivery Pipe Screws: 3.4 N·m (0.35 kgf·m, 30 in·lb)

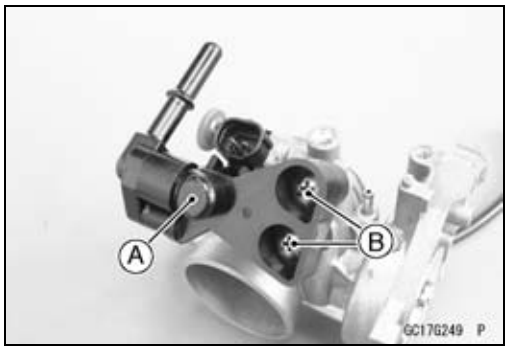

- Install the plate [A].

○Fit the hole [B] and the projection [C].

- Install the vacuum hose [D].
- Tighten the intake air pressure sensor bracket screw.

Torque - Intake Air Pressure Sensor Bracket Screw: 3.4 N·m (0.35 kgf·m, 30 in·lb)

- Install the removed parts (see appropriate chapters).

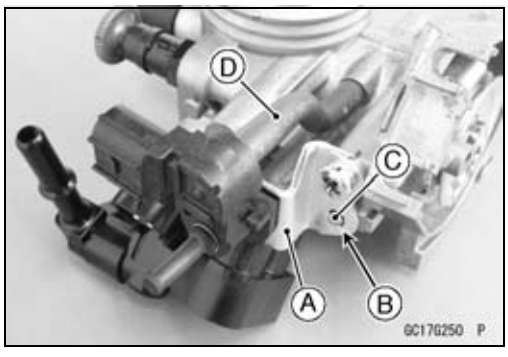

Air Cleaner

Air Cleaner Housing Removal

- Remove:
  Rear Frame (Rear Frame Removal in the Frame chapter)
  Rear Flap (Rear Flap Removal in the Frame chapter)
- Loosen the air cleaner duct clamp bolt [A].
- Remove the air cleaner housing [B].

Air Cleaner Housing Installation

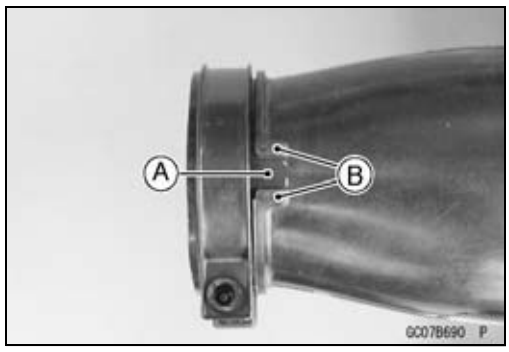

- Position the claw [A] on the air cleaner duct clamp between the projections [B].
- Install the air cleaner housing.

  Torque - Air Cleaner Duct Clamp Bolt: 2.0 N·m (0.20 kgf·m, 18 in·lb)

- Install the removed parts (see appropriate chapters).

Element Removal/Installation

- Refer to the Air Cleaner Element Cleaning and Inspection in the Periodic Maintenance chapter.

Element Cleaning and Inspection

- Refer to the Air Cleaner Element Cleaning and Inspection in the Periodic Maintenance chapter.

Fuel Tank

Fuel Tank Removal

⚠ WARNING

Gasoline is extremely flammable and can be explosive under certain conditions. Always stop the engine and do not smoke. Make sure the area is well-ventilated and free from any source of flame or sparks; this includes any appliance with a pilot light.

- Remove:
  Seat (see Seat Removal in the Frame chapter)
  Radiator Shroud (see Radiator Shroud Removal in the Frame chapter)
  Band [A]
  Fuel Tank Bolt [B]

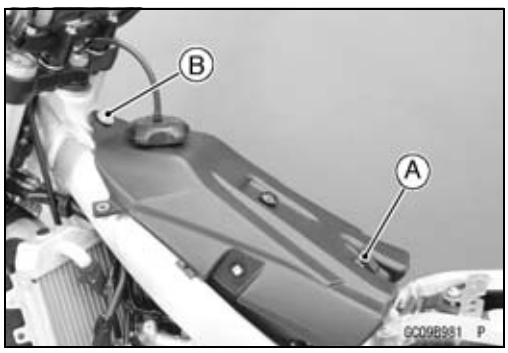

- Draw the fuel out from the fuel tank with a commercially available pump [A].
  ○Use a soft plastic hose [B] as a pump intake hose in order to insert the hose smoothly.
  ○Put the hose through the fill opening [C] into the tank and draw the fuel out.

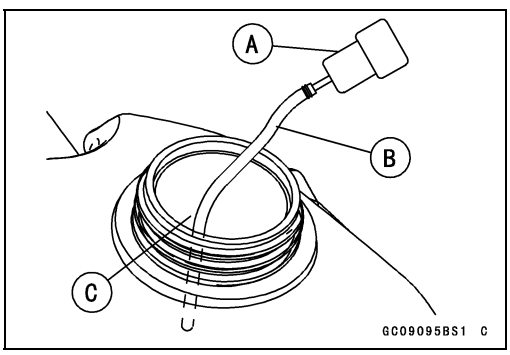

⚠ WARNING

Spilled fuel is flammable and can be explosive under certain conditions. The fuel can not be removed completely from the fuel tank. Be careful for remained fuel spillage.

- Lift up the fuel tank, and remove the fuel pump lead connector [A].

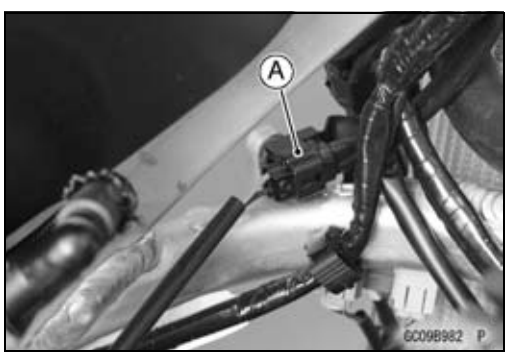

- Be sure to place a piece of cloth around the fuel hose joint.
- Wipe off the dirt of the surface [A] around the connection using a cloth or a soft brush.

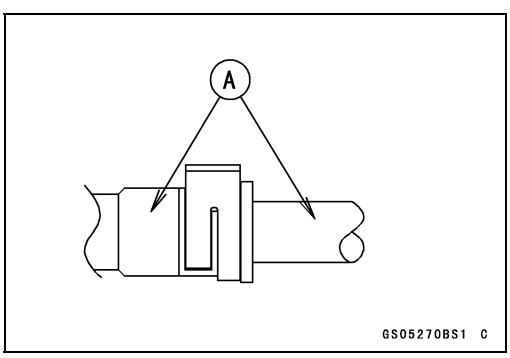

Fuel Tank

When removing with flat tip screwdriver:
- Insert the flat tip screwdriver [A] into the slit [B] on the joint lock.
- Turn the driver to disconnect the joint lock.

When removing with fingers:
- Open and push up [C] the joint lock with your fingers.

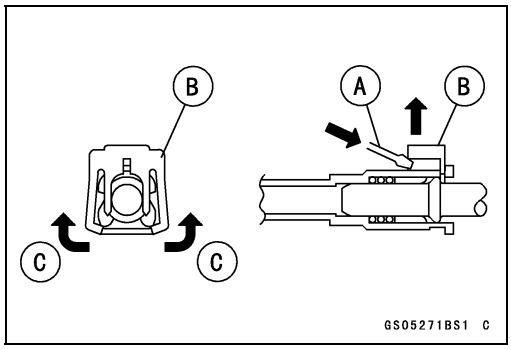

NOTICE

Prying or excessively widening the joint lock ends for fuel hose removal will permanently deform the joint lock, resulting in a loose or incomplete lock that may allow fuel to leak and create the potential for a fire explosion. To prevent fire or explosion from a damaged joint lock, do not pry or excessively widen the joint lock ends when removing the fuel hose. The joint lock has a retaining edge that locks around the housing.

- Pull [A] the fuel hose joint out of the fuel outlet pipe [B].

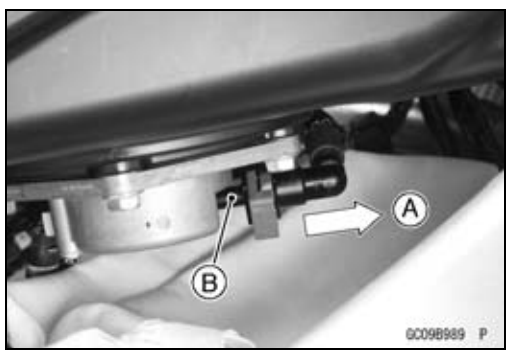

⚠ WARNING

Fuel is flammable and explosive under certain conditions and can cause severe burns. Be prepared for fuel spillage; any spilled fuel must be completely wiped up immediately. When the fuel hose is disconnected, fuel spills out from the hose and the pipe because of residual pressure. Cover the hose connection with a piece of clean cloth to prevent fuel spillage.

- Close the fuel tank cap.
- Remove the fuel tank, and place a it on a flat surface.

○Do not apply the load to the fuel outlet pipe of the fuel pump.

⚠ WARNING

Gasoline is extremely flammable and can be explosive under certain conditions, creating the potential for serious burns. Store the fuel tank in an area which is well-ventilated and free from any source of flame or sparks. Do not smoke in this area. Place the fuel tank on a flat surface and plug the fuel pipes to prevent fuel leakage.

- Clean the pipe [A].
- Cover the pipe and hose joint [B] with the vinyl bags [C] to keep them clean.

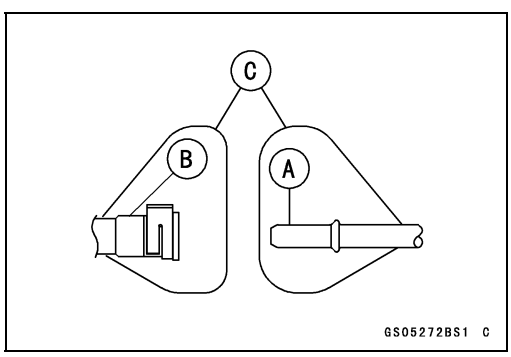

Fuel Tank Installation

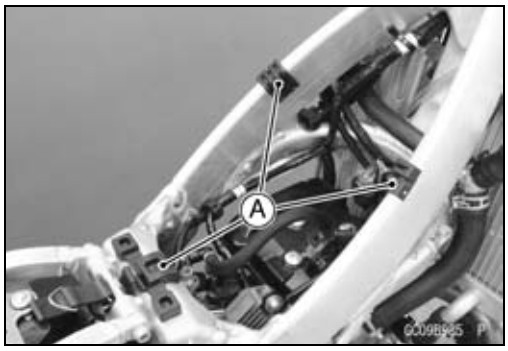

- Note the above WARNING (see Fuel Tank Removal).
- Run the hoses correctly (see Cable, Wire, and Hose Routing section in the Appendix chapter).
- Check that the dampers [A] are in place on the frame.

★If the dampers are damaged or deteriorated, replace it.

○Using a high flash-point solvent, clean any oil or dirt that may be on the adhesive cement coating area. Dry them with a clean cloth.

★If necessary, apply adhesive cement to the underside of the dampers, and stick them.

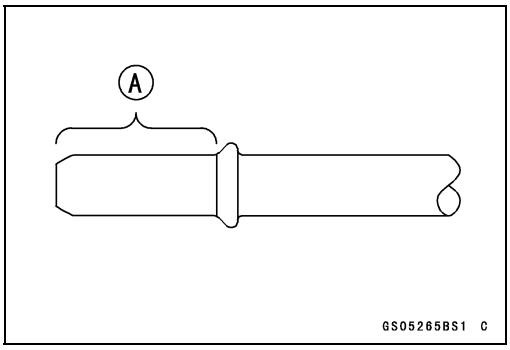

- Remove the vinyl bags on the pipe and hose joint.
- Check that there are no flaws, burrs, and adhesion of foreign materials on fuel outlet pipe [A].
- Check the joint lock for deformation and wear.
- If the joint lock is deformed, replace the fuel hose with a new one.
- Apply engine oil to the fuel outlet pipe lightly.

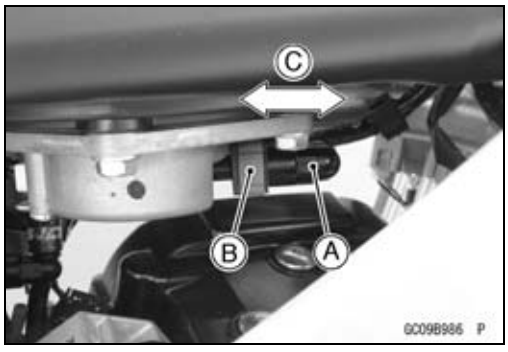

- Insert the fuel hose joint [A] straight onto the fuel outlet pipe until the hose joint clicks.
- Push the joint lock [B].
- Push and pull [C] the fuel hose joint back and forth more than two times, and make sure it is locked and does not come off.

⚠ WARNING

Leaking fuel can cause a fire or explosion resulting in serious burns. Make sure the hose joint is installed correctly on the delivery pipe by sliding the joint.

★If it comes off, reinstall the hose joint.

- Connect the fuel pump lead connector.
- Tighten the fuel tank mounting bolt.

Torque - Fuel Tank Bolt: 8.0 N·m (0.82 kgf·m, 71 in·lb)

- Hook the band to the fuel tank.

- Install the removed parts (see appropriate chapters).

○Insert the fuel tank breather hose into the steering stem hole.

NOTE

○*For easily starting the engine, connect the 12 V battery to the main harness (see Self-diagnosis Procedures).*

○*When the battery is connected, the fuel pump is driven and the pressure of the fuel line increases.*

Fuel Tank Cleaning

- Refer to the Fuel Tank Cleaning in the Periodic Maintenance chapter.

Cooling System

Table of Contents

Exploded View 4-2
Specifications 4-4
Special Tools 4-5
Coolant 4-6
- Coolant Level Inspection 4-6
- Coolant Deterioration Inspection 4-6
- Coolant Draining 4-6
- Coolant Filling 4-7
- Air Bleeding 4-8
- Cooling System Pressure Testing 4-8
- Cooling System Flushing 4-9

Water Pump 4-10
- Water Pump Cover Removal 4-10
- Water Pump Cover Installation 4-10
- Impeller Removal 4-10
- Impeller Installation 4-11
- Water Pump Inspection 4-11
- Oil Seal and Bearing Removal 4-11
- Oil Seal and Bearing Installation 4-12

Radiator 4-13
- Radiator Removal 4-13
- Radiator Installation 4-14
- Radiator Inspection 4-14
- Radiator Cap Inspection 4-15
- Filler Neck Inspection 4-15
- Water Hoses and Overflow Hose Inspection 4-15
- Water Hoses and Overflow Hose Installation 4-15

Exploded View

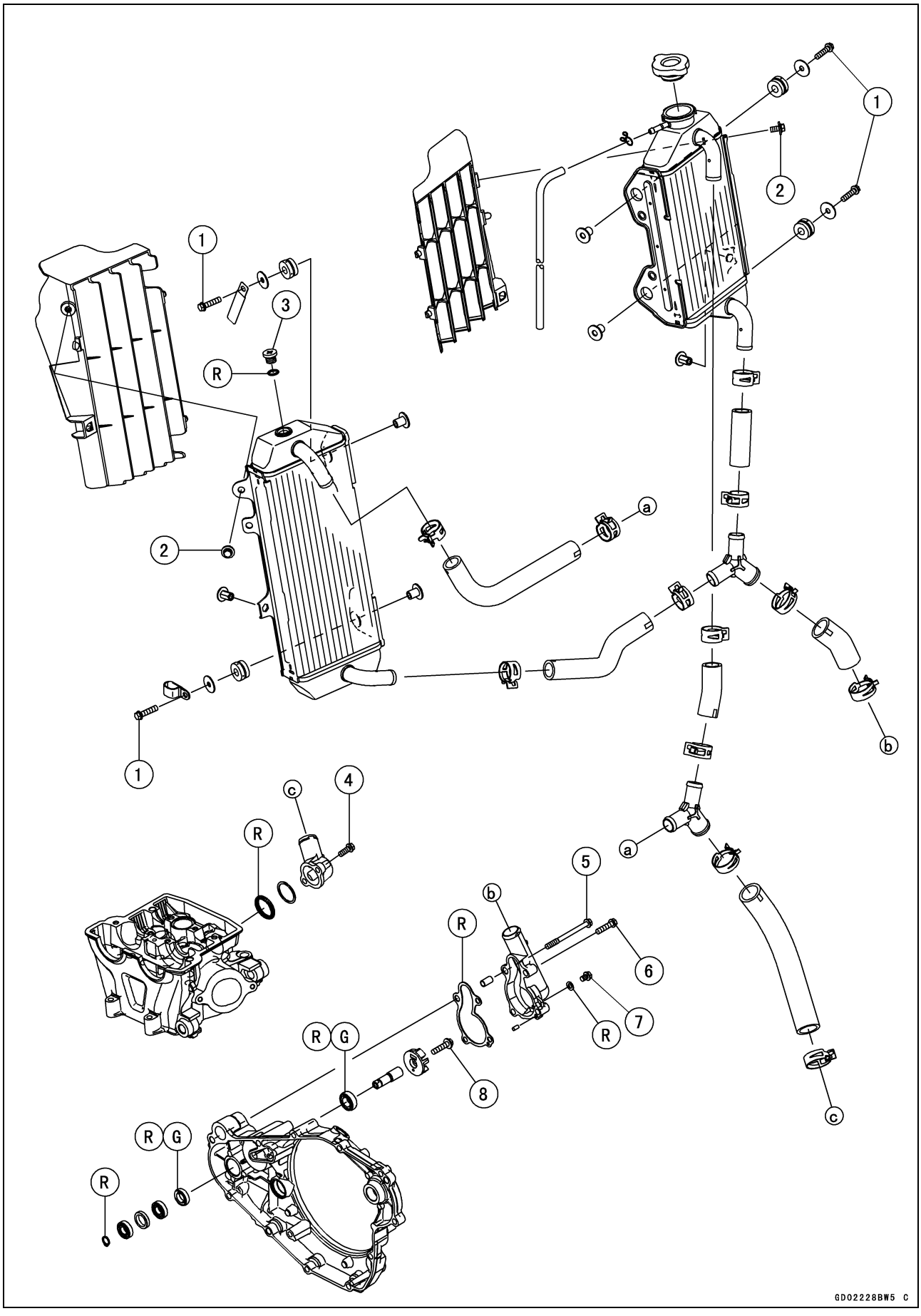

Exploded View

No.	Fastener	Torque			Remarks
		N·m	kgf·m	ft·lb	
1	Radiator Mounting Bolts	10	1.0	89 in·lb	
2	Radiator Screen Bolts	10	1.0	89 in·lb	
3	Air Bleeder Screw	1.6	0.16	14 in·lb	
4	Water Hose Fitting Bolts	10	1.0	89 in·lb	
5	Water Pump Cover Bolt (L = 70 mm)	12	1.2	106 in·lb	
6	Water Pump Cover Bolts (L = 25 mm)	10	1.0	89 in·lb	
7	Coolant Drain Bolt	7.0	0.71	62 in·lb	
8	Water Pump Impeller Bolt	10	1.0	89 in·lb	

G: Apply grease.
R: Replacement Parts

Specifications

Item	Standard
Recommended Coolant	
Type	Permanent type antifreeze (soft water and ethylene glycol plus corrosion and rust inhibitor chemicals for aluminum engines and radiators)
Color	Green
Mixed Ratio	Soft water 50%, coolant 50%
Freezing Point	–35°C (–31°F)
Total Amount	1.1 L (1.2 US qt)
Radiator	
Radiator Cap Relief Pressure	107.9 ~ 137.3 kPa (1.10 ~ 1.40 kgf/cm², 15.6 ~ 19.9 psi)

Special Tools

Outside Circlip Pliers:
57001-144

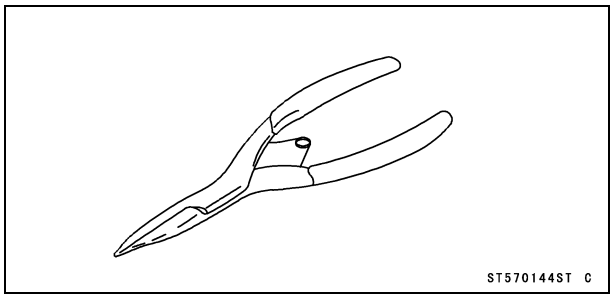

Bearing Driver Set:
57001-1129

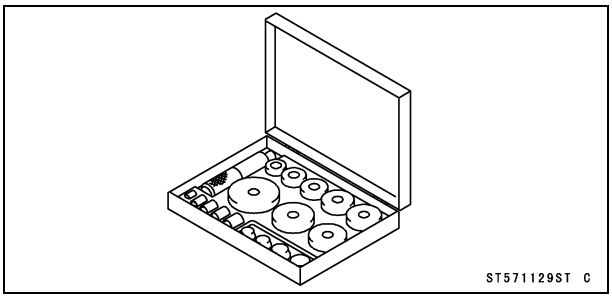

Coolant

Coolant Level Inspection

- Refer to the Coolant Level Inspection in the Periodic Maintenance chapter.

Coolant Deterioration Inspection

- Refer to the Coolant Deterioration Inspection in the Periodic Maintenance chapter.

Coolant Draining

⚠ WARNING

Coolant can be extremely hot and cause severe burns, is toxic and very slippery. Do not remove the radiator cap or attempt to change the coolant when the engine is hot; allow it cool completely. Immediately wipe any spilled coolant from tires, frame, engine or other painted parts. Do not ingest coolant.

NOTICE

The coolant should be changed periodically to ensure long engine life.

- Remove the radiator cap [A].

NOTE

○*Remove the radiator cap in two steps. First turn the cap counterclockwise to the first stop and wait there for a few seconds. Then push down and turn it further in the same direction and remove the cap.*

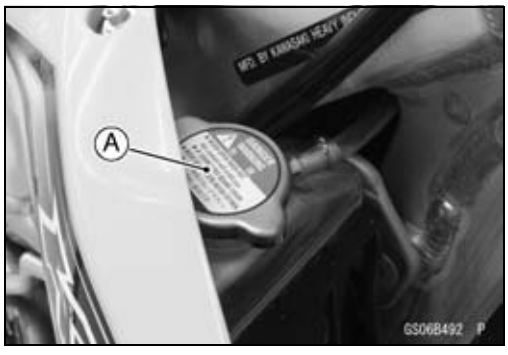

- Place a container under the coolant drain bolt [A].
- Remove the drain bolt to drain the coolant.
- Inspect the old coolant (see Coolant Deterioration Inspection in the Periodic Maintenance chapter).

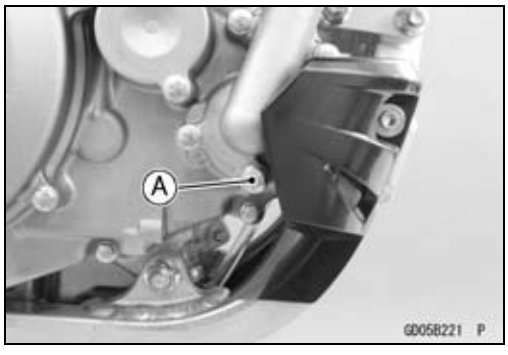

Coolant

Coolant Filling

NOTICE
Use coolant containing corrosion inhibitors made specifically for aluminum engines and radiators in accordance with the instruction of the manufacture's. Soft or distilled water must be used with the antifreeze (see below for antifreeze) in the cooling system. If hard water is used in the system, it causes scale accumulation in the water passages, and considerably reduces the efficiency of the cooling system.

Recommended Coolant

Type:	**Permanent type antifreeze (soft water and ethylene glycol plus corrosion and rust inhibitor chemicals for aluminum engines and radiators)**
Color:	**Green**
Mixed Ratio:	**Soft water 50%, coolant 50%**
Freezing Point:	**−35°C (−31°F)**
Total Amount	**1.1 L (1.2 US qt)**

- Replace the drain bolt gasket with a new one.
- Tighten:

Torque - Coolant Drain Bolt: 7.0 N·m (0.71 kgf·m, 62 in·lb)

- Fill the radiator up to the bottom of the radiator filler neck [A] with coolant [B].

○Lean the motorcycle slightly so that the filler neck is located uppermost in order to exhaust the air accumulated in the radiator.

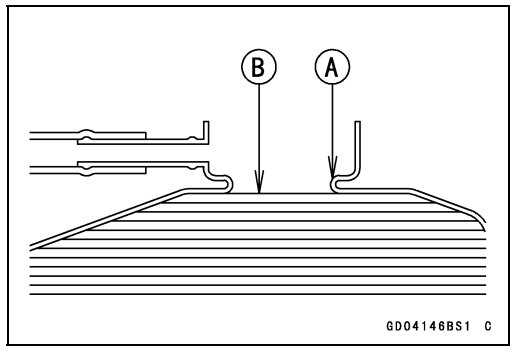

NOTE

○*Pour in the coolant slowly so that it can expel the air from the engine and radiator.*

- Loosen the air bleeder screw [A] on the top of the left radiator until the coolant begins to flow out from the air bleeder screw hole.
- Replace the O-ring of the air bleeder screw with a new one.
- Tighten:

Torque - Air Bleeder Screw: 1.6 N·m (0.16 kgf·m, 14 in·lb)

- Install the radiator cap.

NOTE

○*The radiator cap must be installed in two steps. First turn the cap clockwise to the first stop. Then push down on it and turn it the rest of the way.*

- Check the cooling system for leaks.

Coolant

Air Bleeding

- Start the engine, warm up the engine thoroughly, and then stop the engine.
- Wait until the engine cools down.
- Remove the radiator cap.
- Check the coolant level (see Coolant Level Inspection in the Periodic Maintenance chapter).

★If the coolant level is low, add coolant up to the bottom of the filler neck.

- Loosen the air bleeder screw on the top of the left radiator until the coolant begins to flow out from the air bleeder screw hole.
- Tighten:

Torque - Air Bleeder Screw: 1.6 N·m (0.16 kgf·m, 14 in·lb)

- Install the radiator cap.
- Check the cooling system for leaks.

Cooling System Pressure Testing

NOTICE
During pressure testing, do not exceed the pressure for which the system is designed to work. The maximum pressure is 137.3 kPa (1.40 kgf/cm², 19.9 psi).

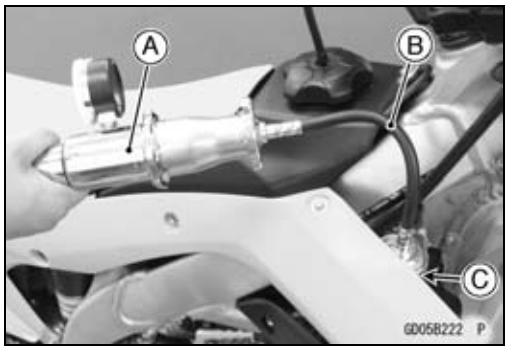

- Remove the radiator cap, and install a cooling system pressure tester [A] and adapter [B] on the radiator filler neck [C].

NOTE

○*Wet the adapter cap sealing surfaces with water or coolant to prevent pressure leaks.*

- Build up pressure in the system carefully until the pressure reaches 137.3 kPa (1.40 kgf/cm², 19.9 psi).
- Watch the gauge for at least 6 seconds.

★If the pressure holds steady, the cooling system is all right.

★If the pressure drops and no external source is found, check for internal leaks. Check the cylinder head gasket for leaks.

- Remove the pressure tester, replenish the coolant, and install the radiator cap.

Coolant

Cooling System Flushing

Over a period of time, the cooling system accumulates rust, scale, and lime in the water jacket and radiator. When this accumulation is suspected or observed, flush the cooling system. If this accumulation is not removed, it will clog up the water passages and considerably reduce the efficiency of the cooling system.

- Drain the cooling system (see Coolant Draining).
- Fill the cooling system with fresh water mixed with a flushing compound.

NOTICE
Avoid the use of a flushing compound which is harmful to the aluminum engine and radiators. Carefully follow the instructions supplied by the manufacture of the cleaning product.

- Warm up the engine, and run it at normal operating temperature for about 10 minutes.
- Stop the engine, and drain the cooling system after the coolant cools down.
- Fill the system with fresh water.
- Warm up the engine and drain the system after the coolant cools down.
- Repeat the previous two steps once more.
- Fill the system with a permanent type coolant, and bleed the air from the system (see Air Bleeding).

Water Pump

Water Pump Cover Removal

- Drain the coolant (see Coolant Draining).
- Remove the right engine guard (see Engine Guard Removal in the Frame chapter).
- Remove the water pump cover bolts [A].

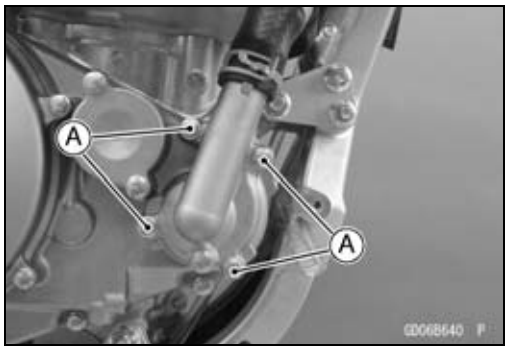

- Remove the water pump cover [A].
- Slide the clamp and disconnect the water hose [B].

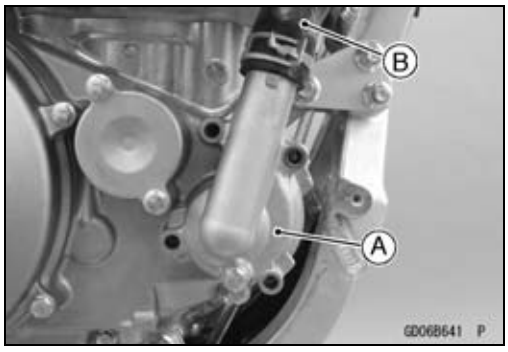

Water Pump Cover Installation

- Replace the water pump cover gasket [A] with a new one.
- Check to see that the dowel pins [B] are in place in the mating surface of the right engine cover.

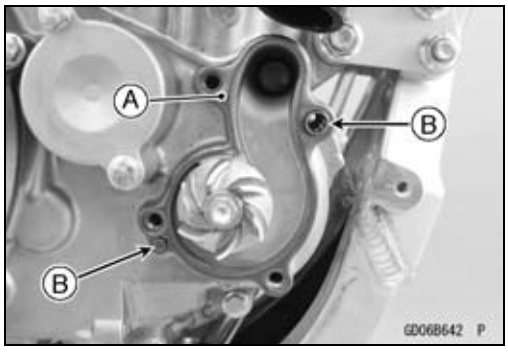

- Install the water hose (see Cable, Wire, and Hose Routing section in the Appendix chapter).
- Install the water pump cover [A].
- Tighten:

  Torque - Water Pump Cover Bolts (L = 25 mm) [B]: 10 N·m (1.0 kgf·m, 89 in·lb)
  Water Pump Cover Bolt (L = 70 mm) [C]: 12 N·m (1.2 kgf·m, 106 in·lb)

- Fill the coolant (see Coolant Filling).
- Bleed the air from the cooling system (see Air Bleeding).

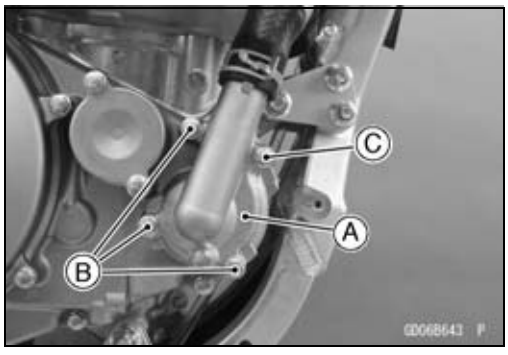

Impeller Removal

- Remove:
  Water Pump Cover (see Water Pump Cover Removal)
  Impeller Bolt [A]
  Impeller [B]

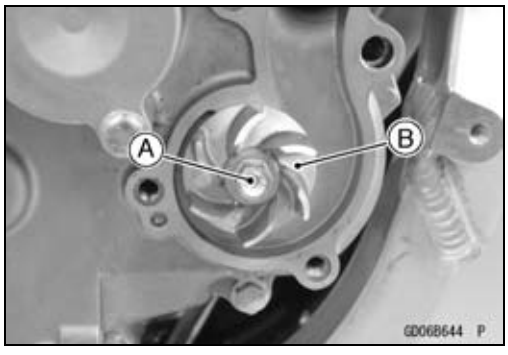

Water Pump

Impeller Installation

- Install:
  Impeller [A]
- Tighten:

Torque - Water Pump Impeller Bolt [B]: 10 N·m (1.0 kgf·m, 89 in·lb)

- Install:
  Water Pump Cover (see Water Pump Cover Installation)

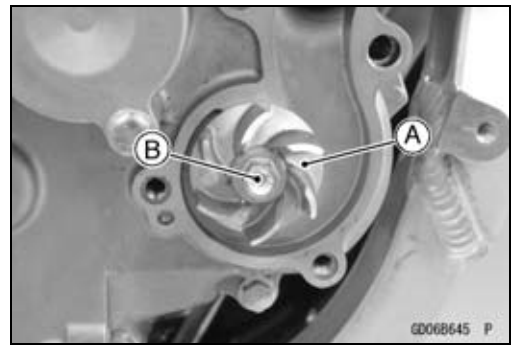

Water Pump Inspection

- Visually check the impeller [A].

★If the surface is corroded, or if the blades [B] are damaged, replace the impeller.

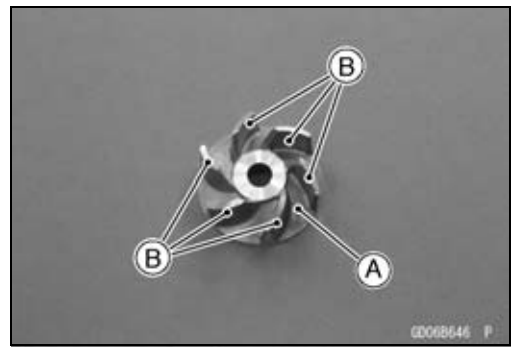

- Check the drainage outlet passage [A] at the bottom of the right engine cover for coolant leaks.
- If a coolant leak or ooze is found, start the engine and check if the coolant leaks continuously.

○When coolant does not continuously leak, it is normal.

★If the oil seal (outside) is damaged, the coolant continuously leaks through the drainage outlet passage. Replace the oil seal (outside).

★If the oil seal (inside) is damaged, engine oil leaks through the drainage outlet passage. Replace the oil seal (inside).

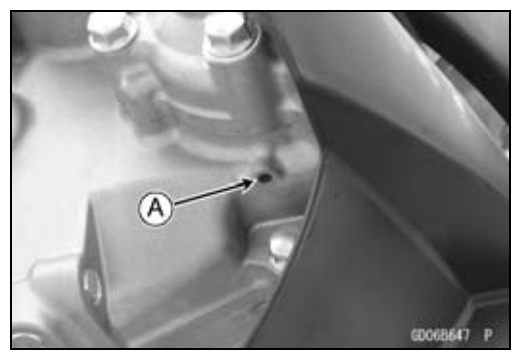

Oil Seal and Bearing Removal

- Remove:
  Impeller (see Impeller Removal)
  Right Engine Cover (see Right Engine Cover Removal in the Clutch chapter)
  Circlip [A]
  Water Pump Shaft [B]

Special Tool - Outside Circlip Pliers: 57001-144

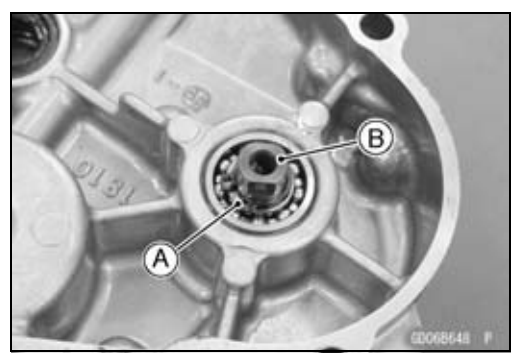

- Insert a bar [A] into the water pump shaft hole from the outside of the right engine cover, and remove the ball bearing [B] by tapping [C] evenly around the bearing inner race.
- Remove the spacer [D].
- Remove the ball bearing [E] and oil seal [F] from the right engine cover in the same way.

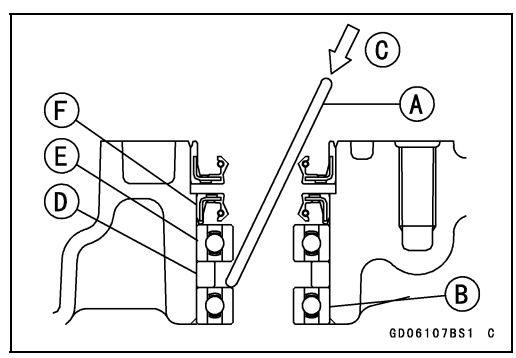

- Insert a bar [A] into the water pump shaft hole from the inside of the right engine cover, and remove the oil seal [B] by tapping [C] evenly around the seal lips.

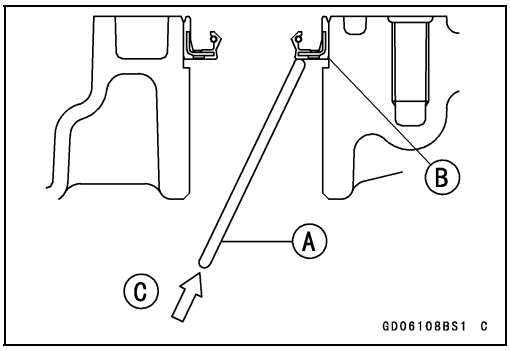

Oil Seal and Bearing Installation

NOTICE
If the oil seal or ball bearing is removed, replace all of them with new ones at the same time

- Replace the oil seals with new ones.
- Apply plenty of grease to the oil seal lips.
- Press in the new oil seal [A] using a bearing driver set from the outside of the right engine cover so that the seal bottom surface is flush with the end face [B] of the right engine cover.
- Press in the new oil seal [C] using a bearing driver set from the outside of the right engine cover so that the oil seal surface is flush [D] with the surface of the right engine cover.

  Special Tool - Bearing Driver Set: 57001-1129

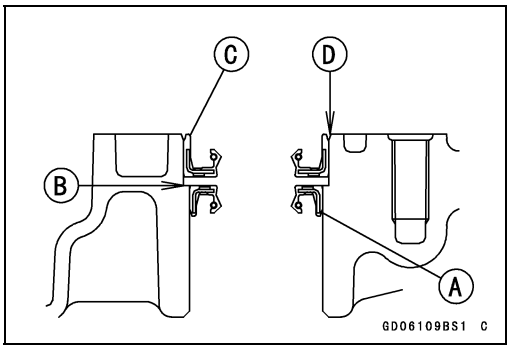

- Press the ball bearings [A] together with the spacer [B] into the hole until the face of the bearing is even [C] with the end of the hole.

  Special Tool - Bearing Driver Set: 57001-1129
- Install the water pump shaft.
- Replace the circlip with a new one.
- Fit the circlip into the groove of the water pump shaft securely.

  Special Tool - Outside Circlip Pliers: 57001-144
- Install the removed parts (see appropriate chapters).

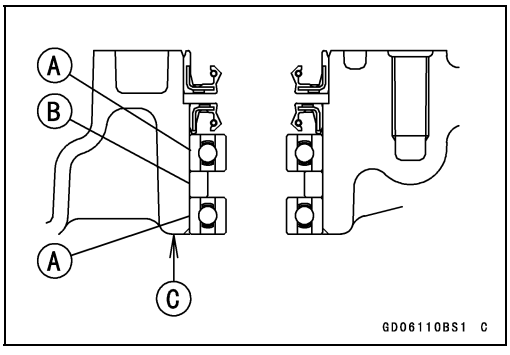

Radiator

Radiator Removal

- Drain the coolant (see Coolant Draining).
- Remove:
  Radiator Shrouds (see Radiator Shroud Removal in the Frame chapter)

- Slide the clamps and disconnect the water hoses [A].
- Remove:
  Bolt [B]
  Left Radiator Screen [C]

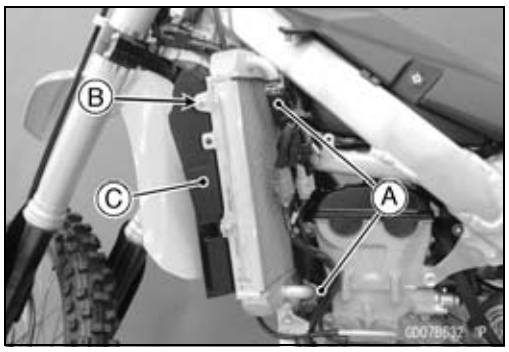

- Remove:
  Radiator Mounting Bolts [A], Clutch Cable Clamps and Washers
  Left Radiator [B]

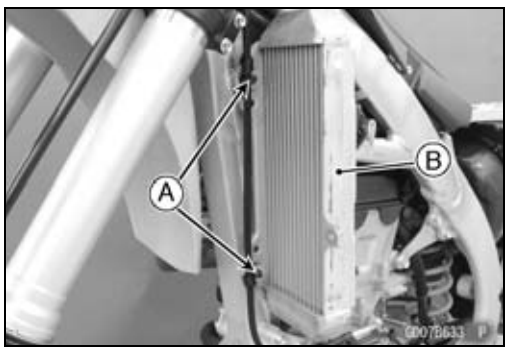

- Slide the clamps and disconnect the water hoses [A].
- Remove:
  Bolt [B]
  Right Radiator Screen [C]

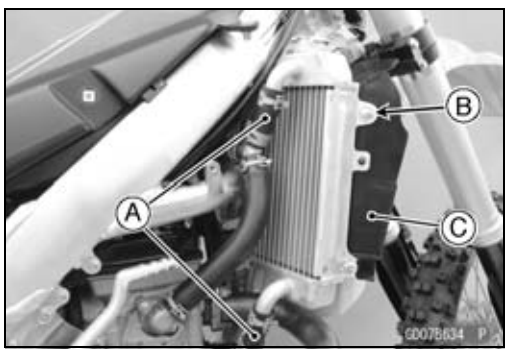

- Slide the clamp and disconnect the radiator overflow hose [A].
- Remove:
  Radiator Mounting Bolts [B] and Washers
  Right Radiator [C]

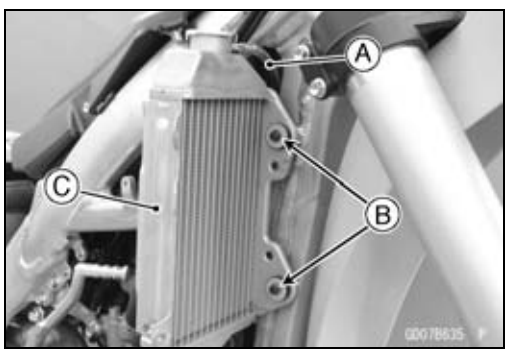

Radiator

Radiator Installation

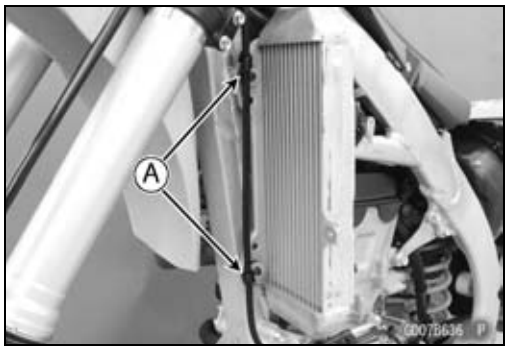

- Run the clutch cable correctly (see Cable, Wire, and Hose Routing section in the Appendix chapter).
- Install:
  Radiators
  Washers
  Clutch Cable Clamps [A] (Left Side)
- Tighten:

  Torque - Radiator Mounting Bolts: 10 N·m (1.0 kgf·m, 89 in·lb)

- Run the hoses correctly (see Cable, Wire, and Hose Routing section in the Appendix chapter).

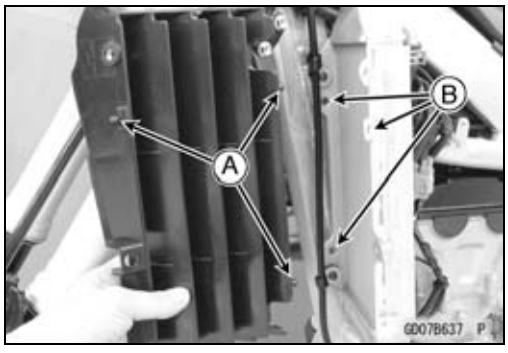

- Install the radiator screens on both sides.

○Fit the projections [A] and the holes [B].

- Tighten:

  Torque - Radiator Screen Bolts: 10 N·m (1.0 kgf·m, 89 in·lb)

- Fill the coolant (see Coolant Filling).
- Install the removed parts (see appropriate chapters).

Radiator Inspection

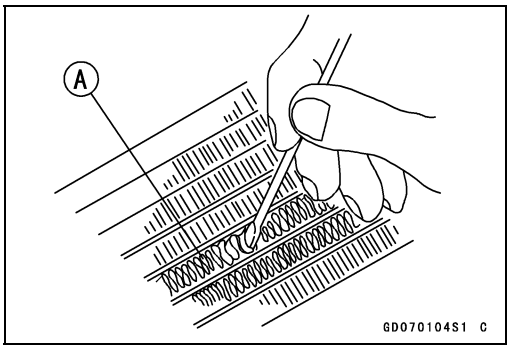

- Check the radiator core.

★If there are obstructions to air flow, remove them.

★If the corrugated fins [A] are deformed, carefully straighten them with the standard tip screwdriver.

NOTICE
Do not tear the radiator tubes while straightening the fins.

★If the air passages of the radiator core are blocked more than 20% by unremovable obstructions or irreparably deformed fins, replace the radiator with a new one.

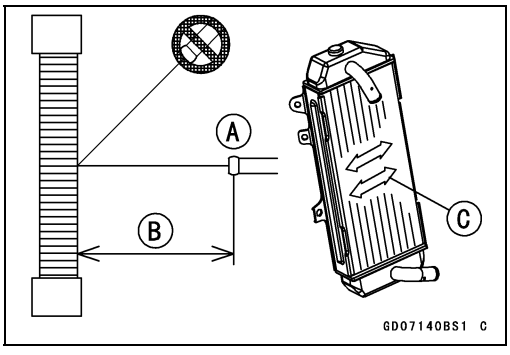

NOTICE
When cleaning the radiator with steam cleaner, be careful of the following to prevent radiator damage. Keep the steam gun [A] away more than 0.5 m (1.64 ft) [B] from the radiator core. Hold the steam gun perpendicular to the core surface. Run the steam gun following the core fin direction [C].

Radiator

Radiator Cap Inspection

- Check the condition of the valve spring [A], and the top and bottom valve seals [B] of the radiator cap.

★If any one of them shows visible damage, replace the cap.

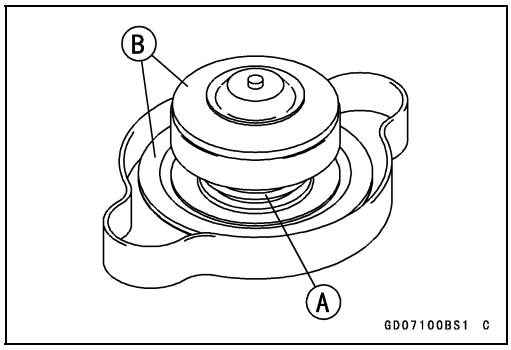

- Wet the top and bottom valve seals with water or coolant to prevent pressure leaks.
- Install the cap [A] on a cooling system pressure tester [B].
- Watching the pressure gauge, slowly pump the pressure tester to build up the pressure. The gauge hand must remain within the relief pressure range in the table below at least 6 seconds. Continue to pump the tester until the relief valve opens, indicated by the gauge hand flicking downward. The relief valve must open within the specified range.

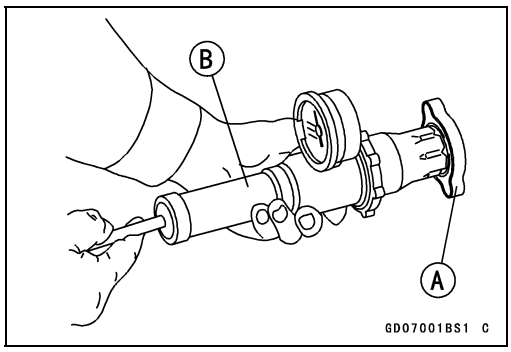

Radiator Cap Relief Pressure
Standard: 107.9 ~ 137.3 kPa (1.10 ~ 1.40 kgf/cm², 15.6 ~ 19.9 psi)

★If the cap cannot hold the pressure, or if the relief pressure is too high or too low, replace the cap with a new one.

Filler Neck Inspection

- Check the radiator filler neck for signs of damage.
- Check the condition of the top and bottom sealing seats [A] in the filler neck. They must be smooth and clean for the radiator cap to function properly.

Water Hoses and Overflow Hose Inspection

- Refer to the Water Hoses and Connections Inspection in the Periodic Maintenance chapter.

Water Hoses and Overflow Hose Installation

- Install the water hoses or overflow hose being careful to follow the performed bends (see Cable, Wire, and Hose Routing section in the Appendix chapter). Avoid sharp bending, kinking, flattening, or twisting.
- Install the hose clamps securely.

Engine Top End

Table of Contents

Exploded View 5-2
Specifications 5-6
Special Tools and Sealant 5-9
Cylinder Head Cover 5-12
Cylinder Head Cover Removal 5-12
Cylinder Head Cover Installation . 5-12
Camshaft Chain Tensioner 5-14
Camshaft Chain Tensioner Removal 5-14
Camshaft Chain Tensioner Installation 5-14
Camshafts 5-16
Camshaft Removal 5-16
Camshaft Installation 5-17
Camshaft Chain Removal 5-19
Camshaft Chain Installation 5-20
Camshaft and Camshaft Cap Wear Inspection 5-20
Camshaft Runout Inspection..... 5-20
Cam Wear Inspection 5-21
Cylinder Head 5-22
Cylinder Compression Measurement 5-22
Cylinder Head Removal 5-22
Cylinder Head Installation 5-24
Cylinder Head Cleaning 5-25
Cylinder Head Warp Inspection ... 5-25
Valves 5-26
Valve Clearance Inspection 5-26
Valve Clearance Adjustment..... 5-26
Valve Removal 5-26
Valve Installation 5-27
Valve Guide Removal 5-27
Valve Guide Installation 5-28
Valve/Valve Guide Clearance Measurement (Wobble Method) 5-29
Valve Seat Inspection 5-29
Valve Seat Repair 5-30
Cylinder and Piston 5-34
Cylinder Removal..... 5-34
Piston Removal..... 5-34
Cylinder and Piston Installation.... 5-34
Cylinder Wear Inspection..... 5-36
Piston Wear Inspection 5-36
Piston/Cylinder Clearance Inspection..... 5-36
Piston Ring/Ring Groove Clearance Inspection 5-37
Piston Ring Groove Width Inspection..... 5-37
Piston Ring Thickness Inspection 5-37
Piston Ring End Gap Measurement 5-38
Piston, Piston Pin, Connecting Rod Wear Inspection..... 5-38
Throttle Body Holder..... 5-39
Throttle Body Assy Holder Removal 5-39
Throttle Body Assy Holder Installation 5-39
Muffler..... 5-40
Muffler Body Removal..... 5-40
Exhaust Pipe Removal..... 5-40
Muffler Installation..... 5-40
Silencer Wool Replacement..... 5-41

Exploded View

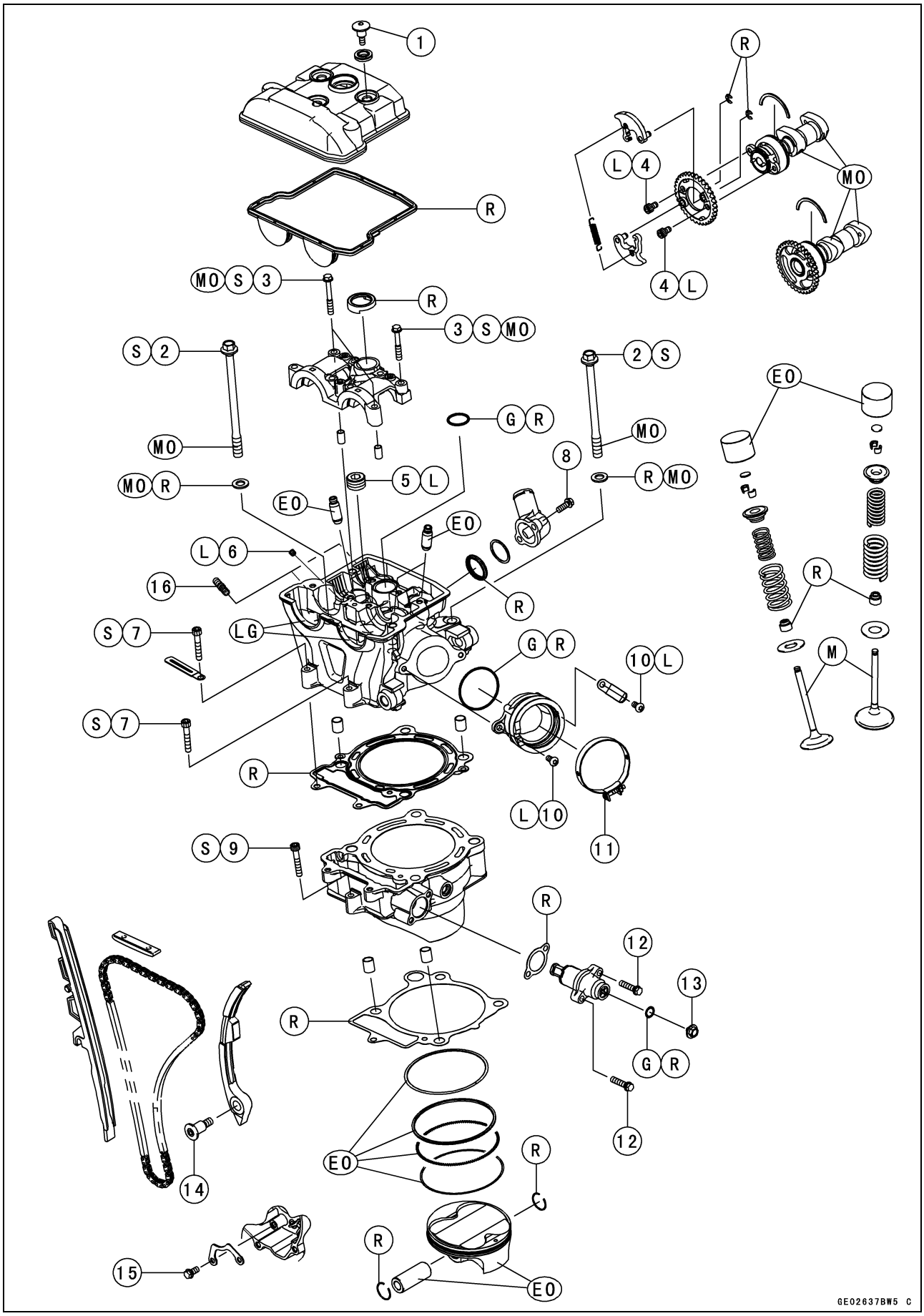

Exploded View

No.	Fastener	Torque			Remarks
		N·m	kgf·m	ft·lb	
1	Cylinder Head Cover Bolts	10	1.0	89 in·lb	
2	Cylinder Head Bolts (M10)	59	6.0	44	MO, S
3	Camshaft Cap Bolts	10	1.0	89 in·lb	MO, S
4	Camshaft Sprocket Bolts	12	1.2	106 in·lb	L
5	Plug	20	2.0	15	L
6	Oil Line Plug	3.0	0.31	27 in·lb	L
7	Cylinder Head Bolts (M6)	12	1.2	106 in·lb	S
8	Water Hose Fitting Bolts	10	1.0	89 in·lb	
9	Cylinder Bolt	12	1.2	106 in·lb	S
10	Throttle Body Assy Holder Screws	10	1.0	89 in·lb	L
11	Throttle Body Assy Clamp Bolt	2.0	0.20	18 in·lb	
12	Camshaft Chain Tensioner Mounting Bolts	10	1.0	89 in·lb	
13	Camshaft Chain Tensioner Cap Bolt	5.0	0.51	44 in·lb	
14	Rear Camshaft Chain Guide Bolt	15	1.5	11	
15	Lower Camshaft Chain Guide Bolt	7.0	0.71	62 in·lb	

16. Face the round end outward.
EO: Apply engine oil.
G: Apply grease.
L: Apply a non-permanent locking agent.
LG: Apply liquid gasket.
M: Apply molybdenum disulfide grease.
MO: Apply molybdenum disulfide oil solution.
(mixture of the engine oil and molybdenum disulfide grease in a weight ratio 10:1)
R: Replacement Parts
S: Follow the specified tightening sequence.

Exploded View

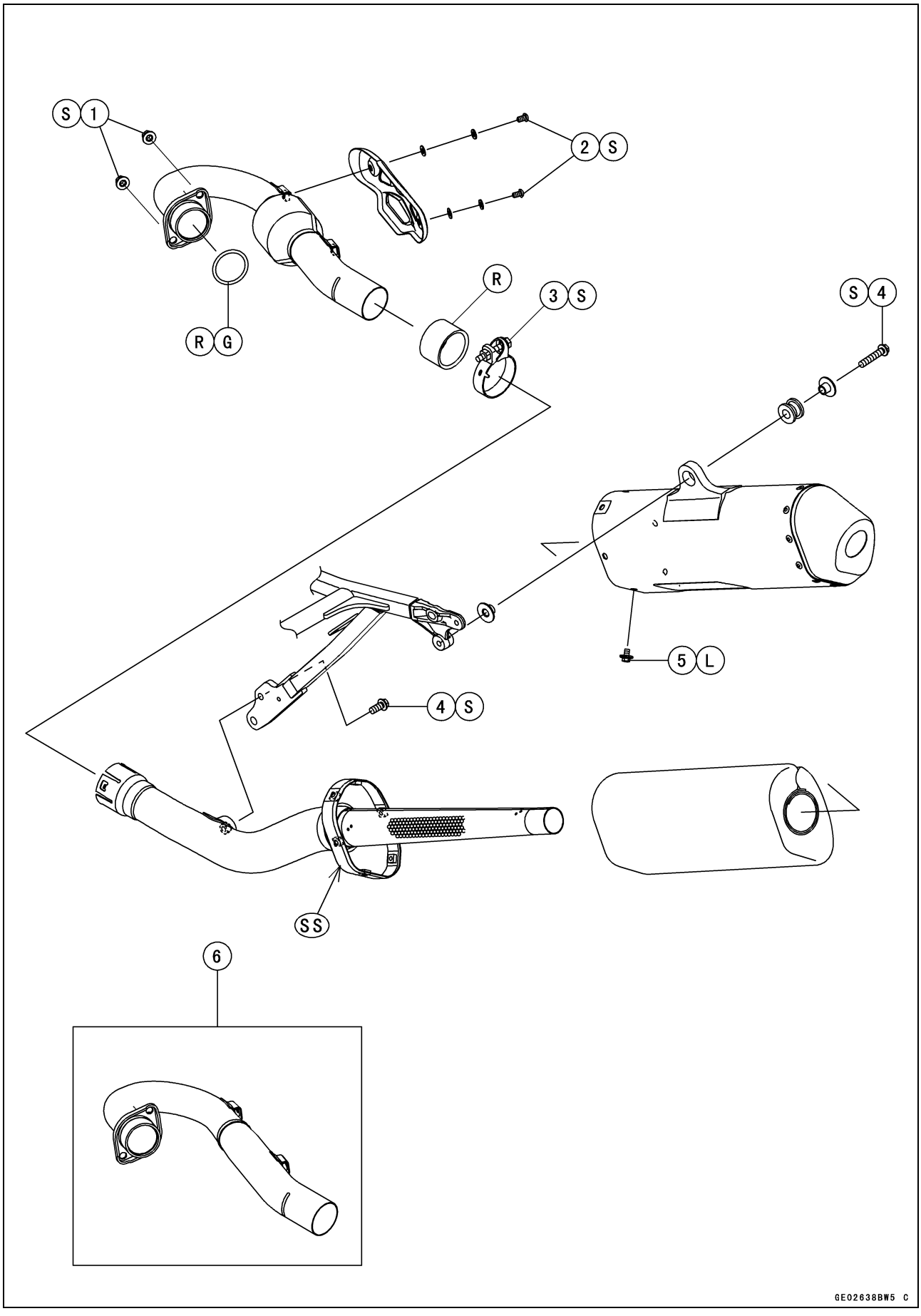

Exploded View

No.	Fastener	Torque			Remarks
		N·m	kgf·m	ft·lb	
1	Exhaust Pipe Holder Nuts	15	1.5	11	S
2	Exhaust Pipe Cover Bolts	12	1.2	106 in·lb	S
3	Muffler Clamp Bolt	11	1.1	97 in·lb	S
4	Muffler Mounting Bolts	21	2.1	15	S
15	Muffler Cover Bolts	10	1.0	89 in·lb	L

6. Other than US and CA Models
G: Apply grease.
L: Apply a non-permanent locking agent.
R: Replacement Parts
S: Follow the specified tightening sequence.
SS: Apply silicone sealant.

Specifications

Item	Standard	Service Limit
Camshafts		
Cam Height:		
Exhaust	36.943 ~ 37.057 mm (1.4544 ~ 1.4589 in.)	36.84 mm (1.450 in.)
Intake	37.743 ~ 37.857 mm (1.4859 ~ 1.4904 in.)	37.64 mm (1.482 in.)
Camshaft Journal/Camshaft Cap Clearance	0.020 ~ 0.062 mm (0.0008 ~ 0.0024 in.)	0.15 mm (0.0059 in.)
Camshaft Journal Diameter	22.959 ~ 22.980 mm (0.9039 ~ 0.9047 in.)	22.93 mm (0.9028 in.)
Camshaft Journal Inside Diameter	23.000 ~ 23.021 mm (0.9055 ~ 0.9063 in.)	23.08 mm (0.9087 in.)
Camshaft Runout	TIR 0.02 mm (0.0008 in.) or less	TIR 0.1 mm (0.004 in.)
Cylinder Head		
Cylinder Compression	(Usable Range) 420 ~ 698 kPa (4.28 ~ 7.12 kgf/cm², 60.9 ~ 101 psi) at 5 times	– – –
Cylinder Head Warp	– – –	0.05 mm (0.002 in.)
Valves		
Valve Clearance:		
Exhaust	0.17 ~ 0.22 mm (0.0067 ~ 0.0087 in.)	– – –
Intake	0.10 ~ 0.15 mm (0.0039 ~ 0.0059 in.)	– – –
Valve Stem Bend	TIR 0.01 mm (0.0004 in.) or less	TIR 0.05 mm (0.002 in.)
Valve Stem Diameter:		
Exhaust	5.455 ~ 5.470 mm (0.2148 ~ 0.2154 in.)	5.44 mm (0.214 in.)
Intake	5.465 ~ 5.480 mm (0.2152 ~ 0.2157 in.)	5.45 mm (0.215 in.)
Valve Guide Inside Diameter:		
Exhaust	5.500 ~ 5.512 mm (0.2165 ~ 0.2170 in.)	5.58 mm (0.220 in.)
Intake	5.500 ~ 5.512 mm (0.2165 ~ 0.2170 in.)	5.58 mm (0.220 in.)
Valve/Valve Guide Clearance (Wobble Method):		
Exhaust	0.08 ~ 0.15 mm (0.0031 ~ 0.0059 in.)	0.32 mm (0.013 in.)
Intake	0.05 ~ 0.12 mm (0.0020 ~ 0.0047 in.)	0.30 mm (0.012 in.)
Valve Seat Cutting Angle	32°, 45°, 55°	– – –

Specifications

Item	Standard	Service Limit
Valve Seating Surface:		
Outside Diameter:		
Exhaust	30.4 ~ 30.6 mm (1.197 ~ 1.205 in.)	– – –
Intake	35.4 ~ 35.6 mm (1.394 ~ 1.402 in.)	– – –
Width:		
Exhaust	0.8 ~ 1.2 mm (0.03 ~ 0.05 in.)	– – –
Intake	0.5 ~ 1.0 mm (0.02 ~ 0.04 in.)	– – –
Valve Spring Free Length:		
Exhaust:		
Outer	38.9 mm (1.53 in.)	37.5 mm (1.48 in.)
Inner	35.7 mm (1.41 in.)	34.2 mm (1.35 in.)
Intake:		
Outer	39.3 mm (1.55 in.)	37.8 mm (1.49 in.)
Inner	36.0 mm (1.42 in.)	34.5 mm (1.36 in.)
Cylinder, Piston		
Cylinder Inside Diameter	96.025 ~ 96.037 mm (3.7805 ~ 3.7810 in.)	96.12 mm (3.784 in.)
Piston Diameter	95.970 ~ 95.980 mm (3.7783 ~ 3.7787 in.)	95.82 mm (3.772 in.)
Piston/Cylinder Clearance	0.045 ~ 0.067 mm (0.0018 ~ 0.0026 in.)	– – –
Piston Ring/Ring Groove Clearance:		
Top	0.040 ~ 0.080 mm (0.0016 ~ 0.0032 in.)	0.18 mm (0.0071 in.)
Piston Ring Groove Width:		
Top	0.83 ~ 0.85 mm (0.033 ~ 0.034 in.)	0.93 mm (0.037 in.)
Piston Ring Thickness:		
Top	0.77 ~ 0.79 mm (0.030 ~ 0.031 in.)	0.70 mm (0.028 in.)
Piston Ring End Gap:		
Top	0.23 ~ 0.33 mm (0.0091 ~ 0.0130 in.)	0.6 mm (0.02 in.)
Oil	0.15 ~ 0.50 mm (0.0059 ~ 0.0197 in.)	0.8 mm (0.03 in.)
Piston Pin Diameter	18.991 ~ 19.000 mm (0.7477 ~ 0.7480 in.)	18.96 mm (0.7465 in.)
Piston Pin Hole Diameter	19.004 ~ 19.010 mm (0.7482 ~ 0.7484 in.)	19.08 mm (0.7512 in.)
Connecting Rod Small End Inside Diameter	19.019 ~ 19.030 mm (0.7488 ~ 0.7492 in.)	19.07 mm (0.7508 in.)

Specifications

Valve Stem Diameter

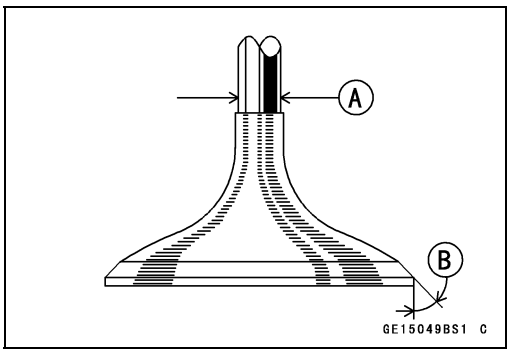

Valve Stem Diameter [A]
45° [B]

Valve Stem Bend

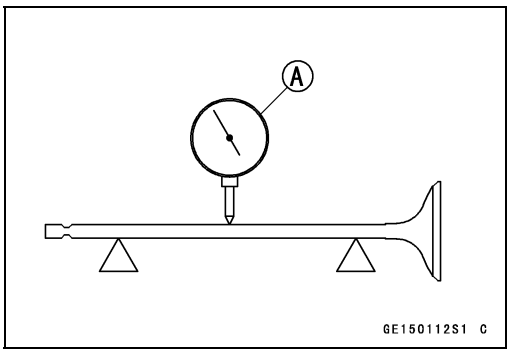

Dial Gauge [A]

Special Tools and Sealant

Compression Gauge, 20 kgf/cm²:
57001-221

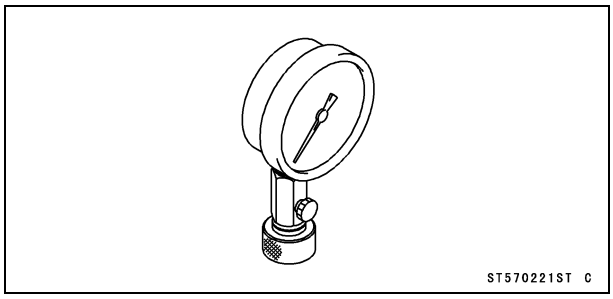

Valve Spring Compressor Assembly:
57001-241

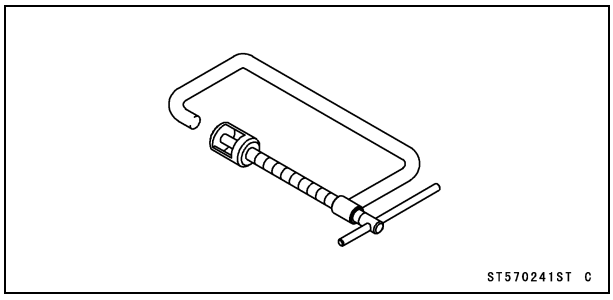

Valve Guide Arbor, ϕ5.5:
57001-1021

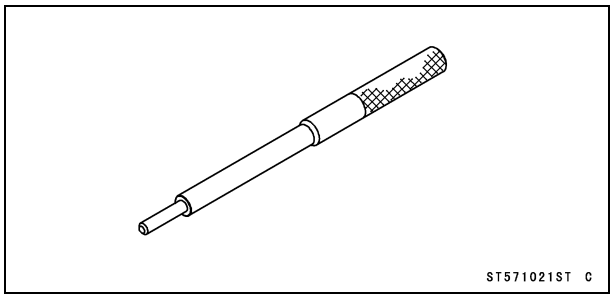

Valve Guide Reamer, ϕ5.5:
57001-1079

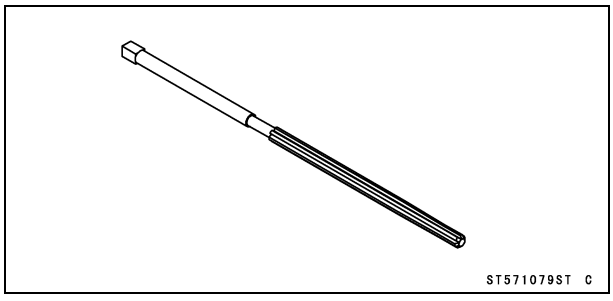

Piston Ring Compressor Grip:
57001-1095

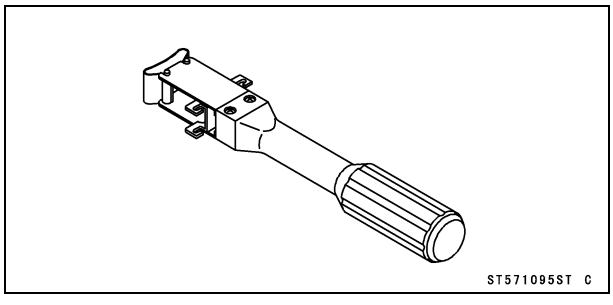

Valve Seat Cutter, 45° - ϕ35:
57001-1116

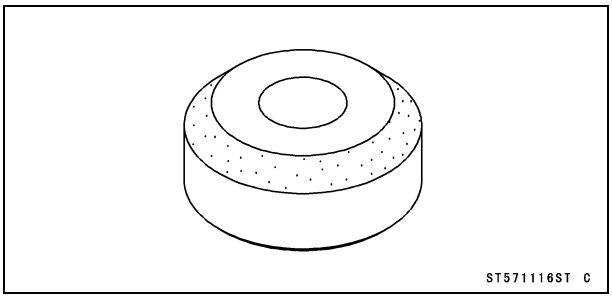

Valve Seat Cutter, 32° - ϕ35:
57001-1121

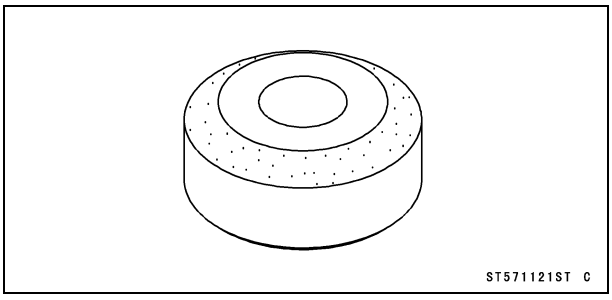

Valve Seat Cutter, 32° - ϕ38.5:
57001-1122

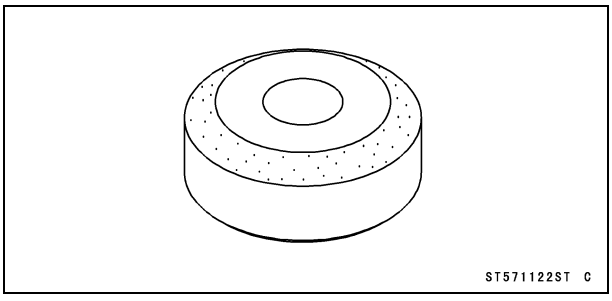

Valve Seat Cutter Holder, ϕ5.5:
57001-1125

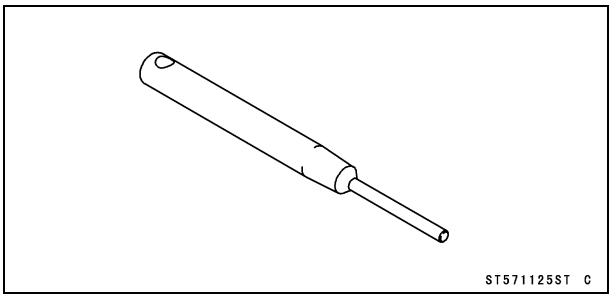

Valve Seat Cutter Holder Bar:
57001-1128

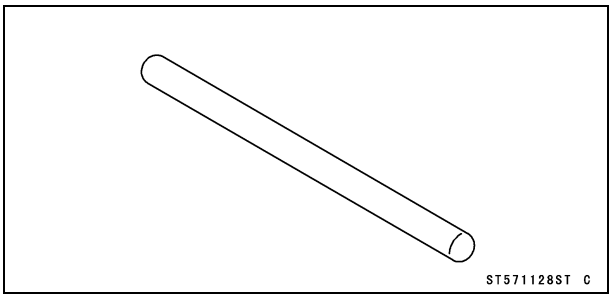

Special Tools and Sealant

Valve Seat Cutter, 55° - ϕ35:
57001-1247

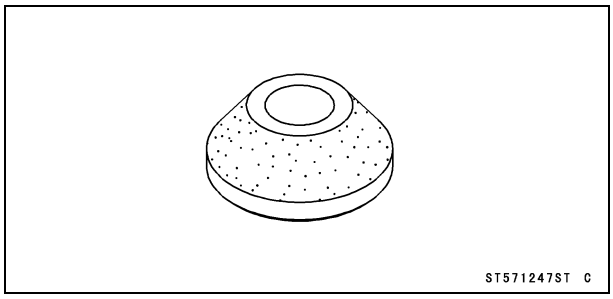

Compression Gauge Adapter, M10 × 1.0:
57001-1317

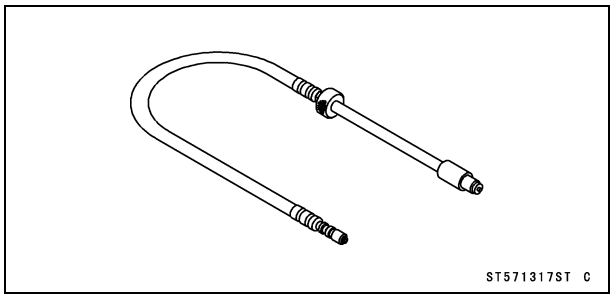

Piston Ring Compressor Belt, ϕ95 ~ ϕ108:
57001-1358

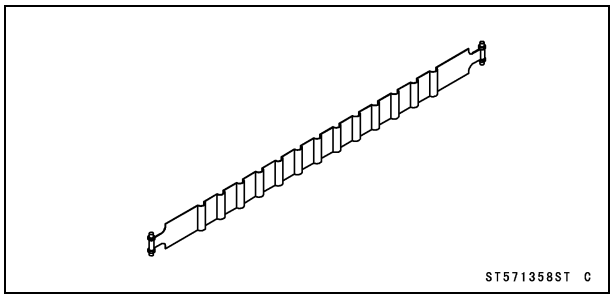

Filler Cap Driver:
57001-1454

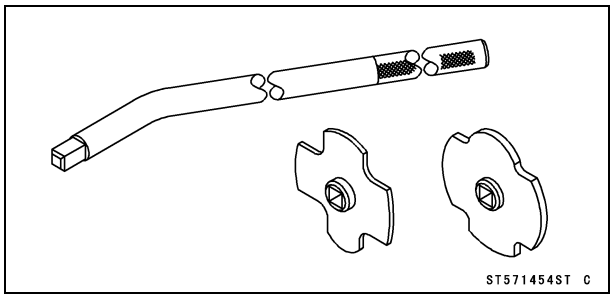

Valve Seat Cutter, 45° - ϕ40:
57001-1496

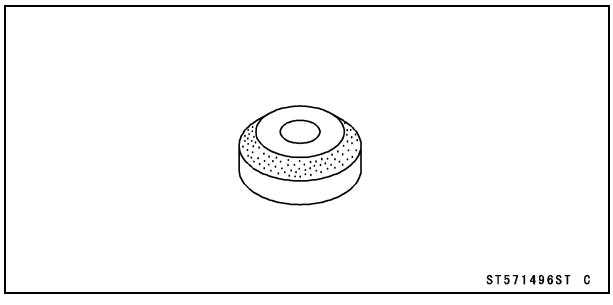

Valve Seat Cutter, 55° - ϕ38.5:
57001-1497

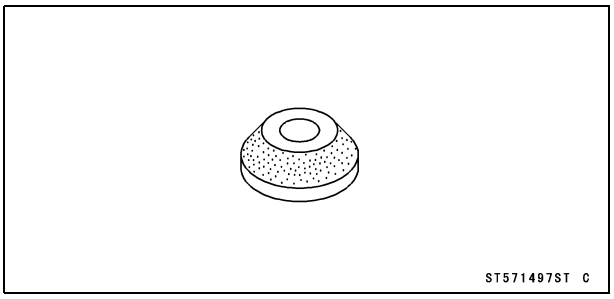

Valve Guide Driver:
57001-1564

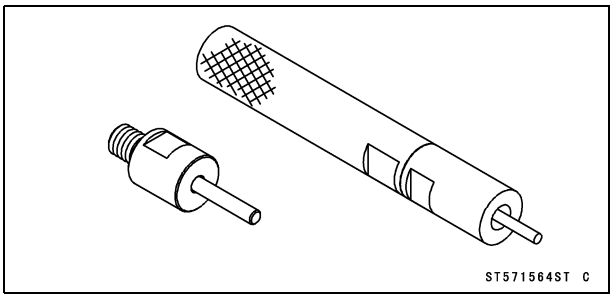

Piston Pin Puller:
57001-1568

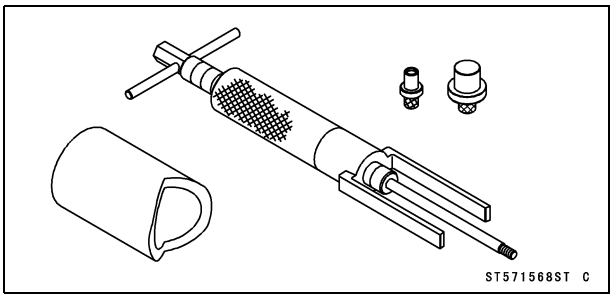

Valve Spring Compressor Adapter, ϕ24:
57001-1586

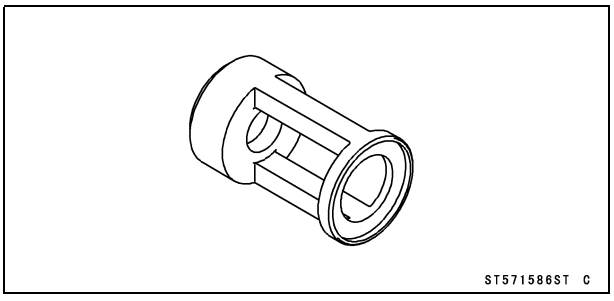

Valve Guide Driver Attachment D:
57001-1659

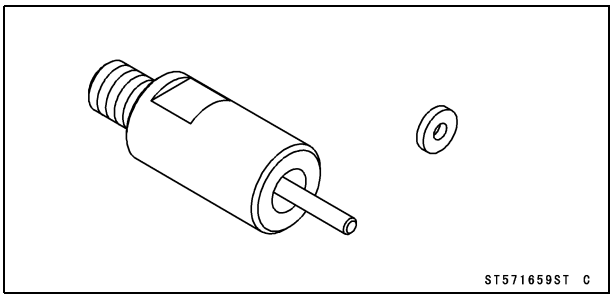

Special Tools and Sealant

Valve Guide Driver Attachment, G:
57001-1728

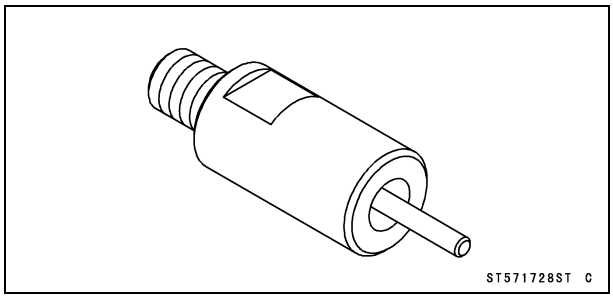

Liquid Gasket, TB1216B:
92104-1064

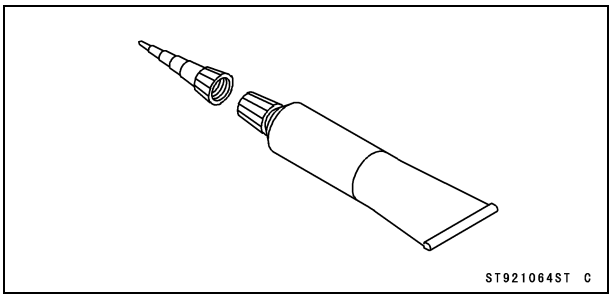

Cylinder Head Cover

Cylinder Head Cover Removal

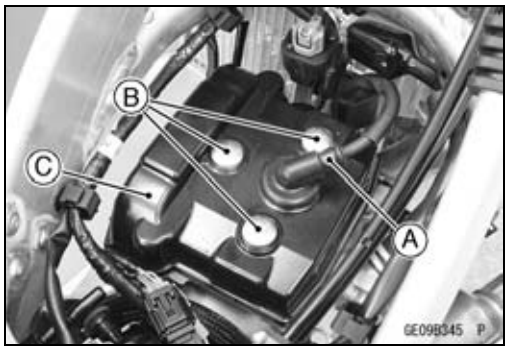

- Remove:
  Fuel Tank (see Fuel Tank Removal in the Fuel System (DFI) chapter)
  Fuel Hose (see Fuel Hose Replacement in the Periodic Maintenance chapter)
  Spark Plug Cap [A]
  Cylinder Head Cover Bolts [B] and Washers
  Cylinder Head Cover [C]

NOTICE

When removing the spark plug cap, do not pull the lead. The lead could be broken off or damaged the wires inside.

Cylinder Head Cover Installation

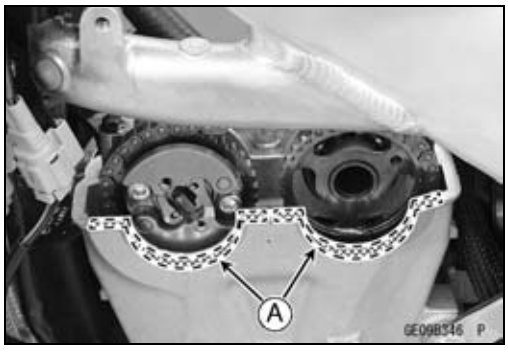

- Using a high flash-point solvent, clean off any oil or dirt that may be on the liquid gasket coating area. Dry them with a clean cloth.
- Apply liquid gasket [A] to the cylinder head as shown in the figure.

Sealant - Liquid Gasket, TB1216B: 92104-1064

NOTE

○*Make the application finish within 20 minutes when the liquid gasket (TB1216B) to the mating surface of the cylinder head cover is applied.*

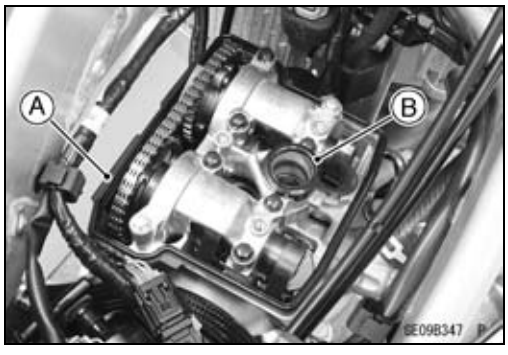

- Replace the cylinder head cover gasket [A] and spark plug hole gasket [B] with new ones.
- Install the cylinder head cover gasket and spark plug hole gasket.

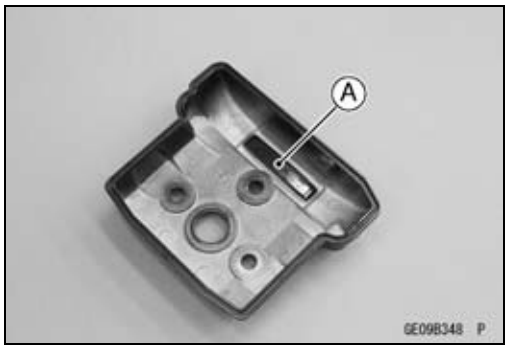

- Make sure that the upper chain guide [A] is bottomed.

NOTICE

Unless the upper chain guide is bottomed, the camshaft chain could push the cylinder head cover upward, leading to an oil leak.

- Install the cylinder head cover.

Cylinder Head Cover

- Install the cylinder head cover bolt washers with the metal side [A] upwards.
- Tighten:

  Torque - Cylinder Head Cover Bolts [B]: 10 N·m (1.0 kgf·m, 89 in·lb)

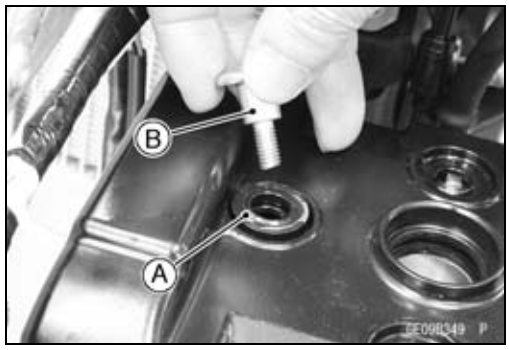

- Install the spark plug cap [A] so that it is aligned with the line [B] on the cylinder head cover.

○Pull up the spark plug cap lightly to make sure of the installation of the spark plug cap.

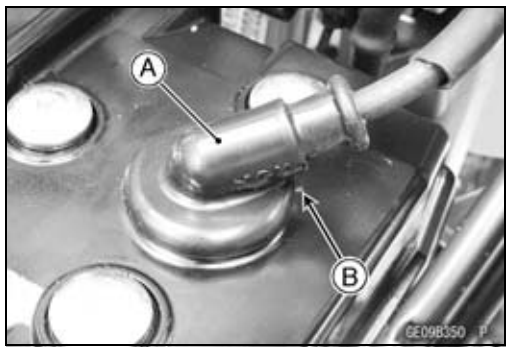

Camshaft Chain Tensioner

Camshaft Chain Tensioner Removal

NOTICE

This is a non-return type camshaft chain tensioner. The push rod does not return to its original position once it moves out to take up camshaft chain slack. Observe all the rules listed below:
When removing the tensioner, do not take out the mounting bolts only halfway. Retightening the mounting bolts from this position could damage the tensioner and the camshaft chain. Once the bolts are loosened, the tensioner must be removed and reset as described in "Camshaft Chain Tensioner Installation".
Do not turn over the crankshaft while the tensioner is removed. This could upset the camshaft chain timing and damage the valves.

- Loosen the camshaft chain tensioner cap bolt [A].
- Remove the camshaft chain tensioner mounting bolts [B] and take off the camshaft chain tensioner body [C].

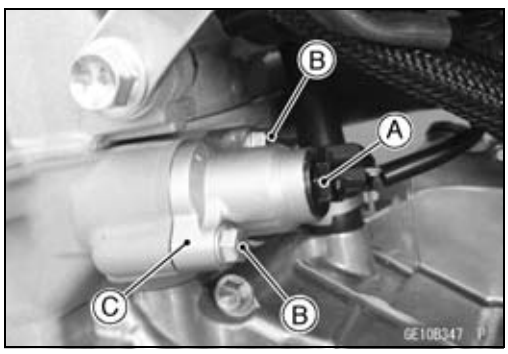

Camshaft Chain Tensioner Installation

- Remove the camshaft chain tensioner cap bolt and O -ring.
- While compressing the push rod [A], turn it clockwise with a suitable screwdriver [B] until the rod stops.

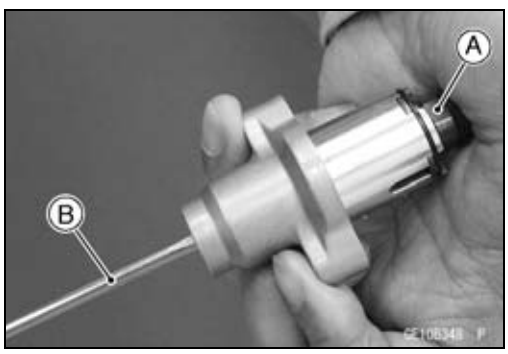

NOTICE

Do not turn the rod counterclockwise at installation. This could detach the rod and the tensioner cannot be reinstalled.

- Hold the rod in position with a suitable push rod holder plate [A].
  3.5 mm (0.14 in.) [B]
  7 mm (0.28 in.) [C]
  12 mm (0.47 in.) [D]
  8.5 mm (0.33 in.) [E]

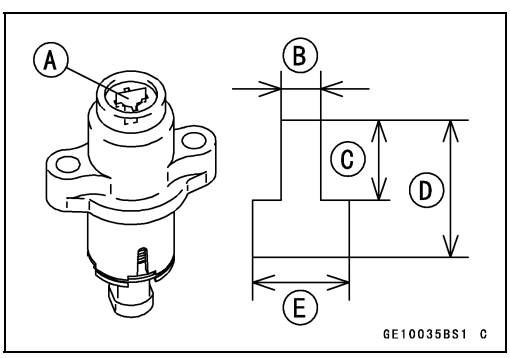

Camshaft Chain Tensioner

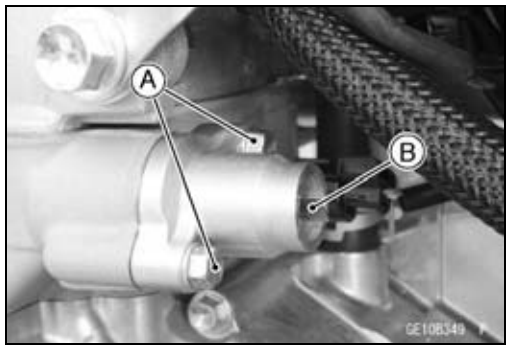

- Replace the chain tensioner gasket with a new one.
- Install the chain tensioner body.
- Tighten:

  Torque - Camshaft Chain Tensioner Mounting Bolts [A]: 10 N·m (1.0 kgf·m, 89 in·lb)

- Take out the holder plate [B].
- Replace the O-ring with a new one.
- Apply grease to the O-ring.
- Install the O-ring and tighten the camshaft chain tensioner cap bolt.

  Torque - Camshaft Chain Tensioner Cap Bolt: 5.0 N·m (0.51 kgf·m, 44 in·lb)

Camshafts

Camshaft Removal

- Remove:
  Cylinder Head Cover (see Cylinder Head Cover Removal)
  Timing Inspection Cap [A]
  Flywheel Nut Cap [B]

Special Tool - Filler Cap Driver: 57001-1454

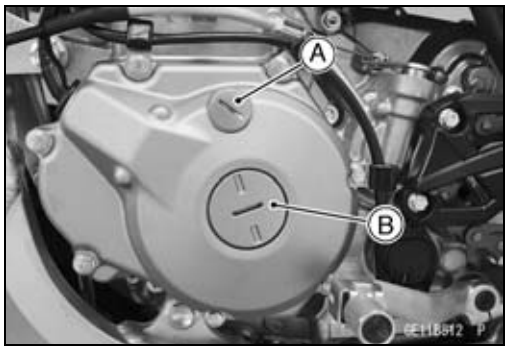

- Bring the piston to the TDC of the compression stroke.

○Place a wrench over the flywheel nut and turn it counter-clockwise to align the TDC mark [A] with the center of the grooves [B] of the inspection hole.

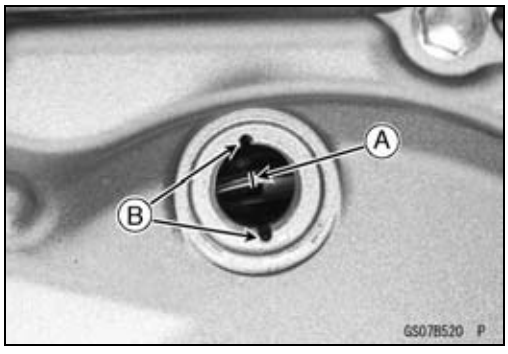

- Remove:
  Camshaft Chain Tensioner (see Camshaft Chain Tensioner Removal)
- Loosen the camshaft cap bolts gradually and evenly as shown sequence [1 ~ 8], and remove them.
- Remove the camshaft cap [A].

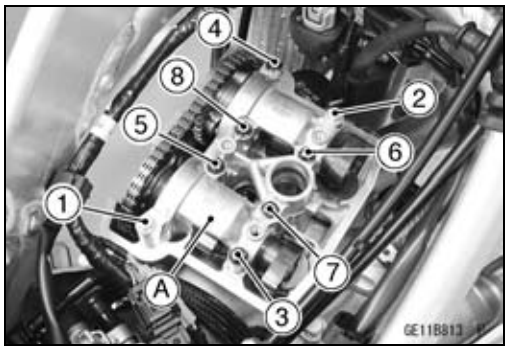

- Remove:
  Positioning Rings [A]
- Disengage the camshafts [B] from camshaft chain [C].

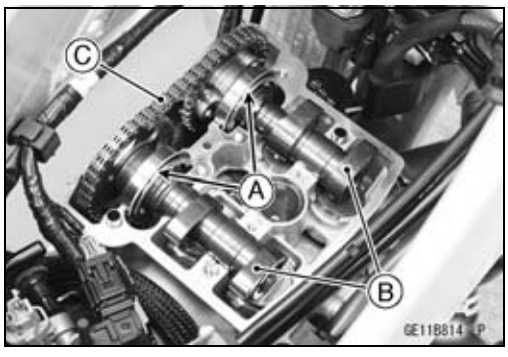

- Staff a clean cloth into the camshaft chain tunnel to keep any parts from dropping into the crankcase.

NOTICE
Always strain the camshaft chain while turning the crankshaft when the camshafts removed. **This avoids kinking the chain on the lower (crankshaft) sprocket. A kinked chain could damage both the chain and the sprocket.**

Camshafts

- While holding the exhaust camshaft with a vise, remove the camshaft sprocket bolts [A].
- Remove:
  Auto-Decompressor [B] (with Sprocket)

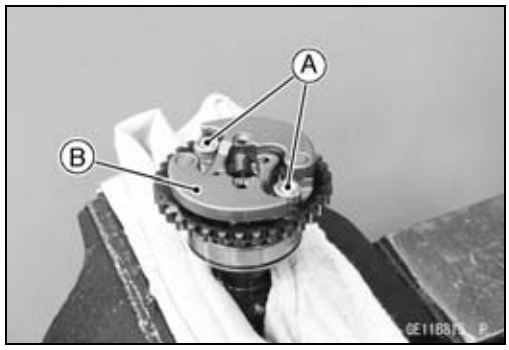

- Remove:
  Circlips [A]

Camshaft Installation

- Assemble the auto-decompressor weights [A] and spring [B] to install it to the sprocket [C].
- Replace the circlips [D] with new ones.
- Install the circlips so that the opening [E] face to the outside.
- Fit the recess [F] of the weights and projections [G] of the camshaft.
- Apply a non-permanent locking agent to the threads of the camshaft sprocket bolts [H].
- Tighten:

  Torque - Camshaft Sprocket Bolts: 12 N·m (1.2 kgf·m, 106 in·lb)

- Apply molybdenum disulfide oil solution to the ball bearing, all cam and journal surfaces of the camshafts.

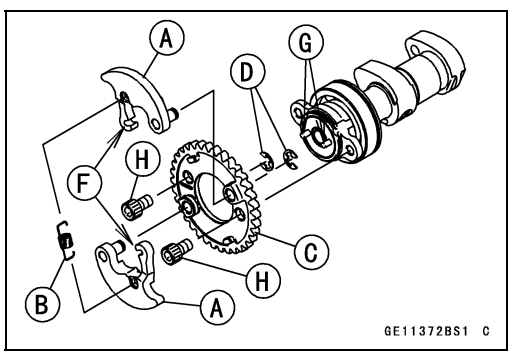

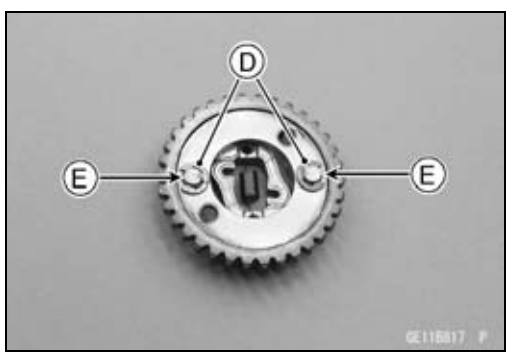

- Bring the piston to the TDC of the compression stroke.
- ○Place a wrench over the flywheel nut and turn it counterclockwise to align the TDC mark [A] with the center of the grooves [B] of the inspection hole.

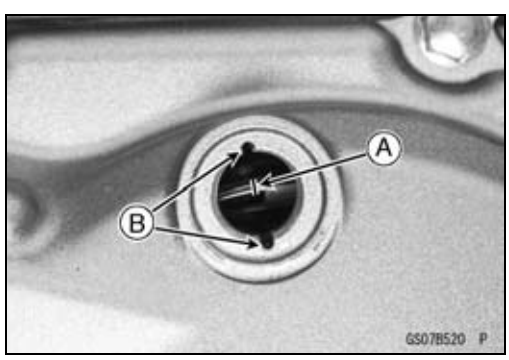

Camshafts

- Engage the camshaft chain with the camshaft sprockets.
  - ○Align the timing mark on the sprocket with the cylinder head upper surface as shown.
  - ○Starting with the timing mark on the front of the exhaust sprocket, count to the 1st pin. Feed the exhaust camshaft thought the chain and align the 29th pin with the timing mark on the intake camshaft sprocket.

NOTE

○*Strain the exhaust-side of the chain while installing the camshaft.*

○*In this figure, tension is not applied to the chain.*

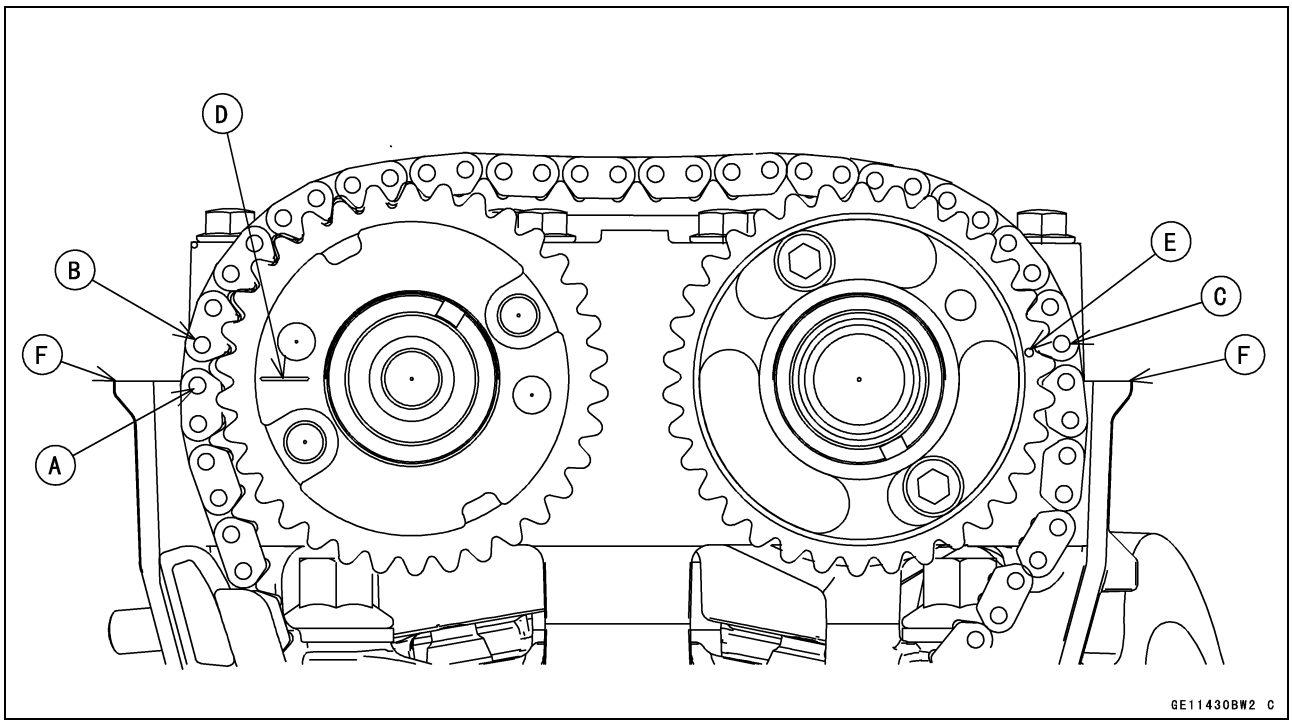

1st Pin [A]	Timing Mark (Exhaust) [D]
2nd Pin [B]	Punch Mark (Intake) [E]
29th Pin [C]	Cylinder Head Upper Surface [F]

NOTE

○*After the installation of the camshaft cap and chain tensioner, confirm the punch mark of the intake camshaft gear aligns with the cylinder head upper surface.*

- Plug the oil passage and camshaft chain tunnel with a clean cloth for prevent the any parts from dropping in the crankcase.
- Be sure to install the positioning rings [A] and dowel pins [B].
- Replace the O-ring [C] with a new one, and apply grease it.

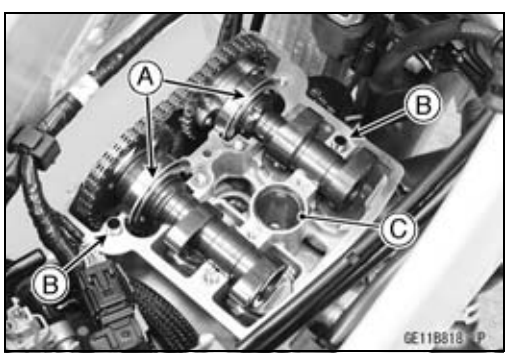

Camshafts

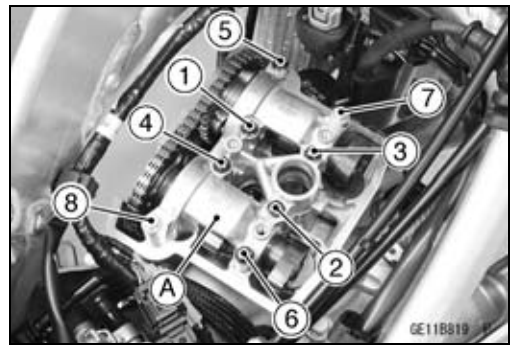

- Install the camshaft cap [A].
- Apply molybdenum disulfide oil to the threads of the camshaft cap bolts.
- Tighten all camshaft cap bolts evenly and lightly, and then tighten them with specified torque.

○Follow the numbers [1 ~ 8] of tightening sequence on the camshaft cap.

Torque - Camshaft Cap Bolts: 10 N·m (1.0 kgf·m, 89 in·lb)

- Install the camshaft chain tensioner (see Camshaft Chain Tensioner Installation).
- Check the camshaft timing.

○Confirm the timing mark and punch mark align with the cylinder head upper surface.

★If the timing mark and punch mark do not align with the cylinder head upper surface, reinstall the camshafts.

○Turn the crankshaft slowly.

★If the crankshaft does not turn smoothly, the timing is different. Stop turning immediately.

NOTICE
The improper camshaft chain timing may damage the valves.

- Install:
  Cylinder Head Cover (see Cylinder Head Cover Installation)
- Replace the timing inspection cap and flywheel nut cap O-rings with new ones.
- Apply grease to the O-rings.
- Tighten:

Torque - Timing Inspection Cap: 3.5 N·m (0.36 kgf·m, 31 in·lb)
Flywheel Nut Cap: 3.5 N·m (0.36 kgf·m, 31 in·lb)

Special Tool - Filler Cap Driver: 57001-1454

Camshaft Chain Removal

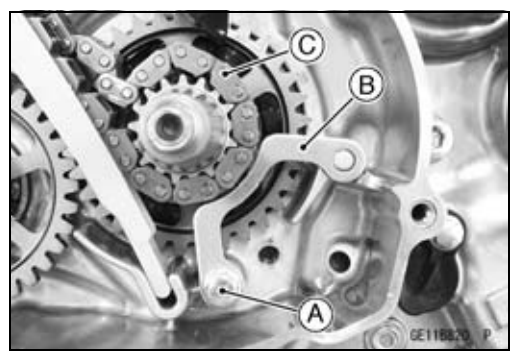

- Remove:
  Camshafts (see Camshaft Removal)
  Flywheel (see Flywheel Removal in the Electrical System chapter)
  Lower Camshaft Chain Guide Bolt [A]
  Lower Camshaft Chain Guide [B]
- Disengage the camshaft chain [C] from the crankshaft.

Camshafts

Camshaft Chain Installation

- Engage the camshaft chain to the crankshaft.
- Install the lower camshaft chain guide.
- Tighten:

Torque - Lower Camshaft Chain Guide Bolt: 7.0 N·m (0.71 kgf·m, 62 in·lb)

- Install:
  Flywheel (see Flywheel Installation in the Electrical System chapter)
  Camshafts (see Camshaft Installation)

Camshaft and Camshaft Cap Wear Inspection

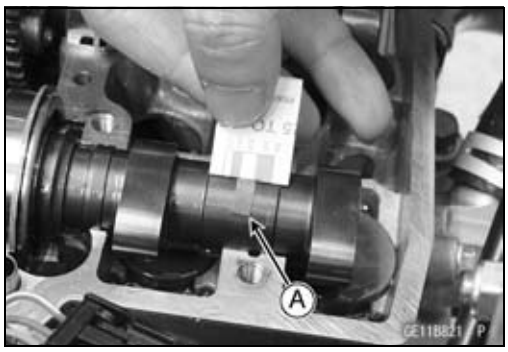

- Remove:
  Camshaft Cap (see Camshaft Removal)
- Cut the strips of plastigage (press gauge) to journal width. Place a strip on each journal parallel to the camshaft installed in the correct position.
- Tighten the camshaft cap bolts to the specified torque (see Camshaft Installation).

NOTE

○*Do not turn the camshaft when the plastigage is between the journal and camshaft cap.*

- Remove the camshaft cap again, measure each clearance between the camshaft journal and the camshaft cap using plastigage [A].

Camshaft Journal/Camshaft Cap Clearance
Standard: 0.020 ~ 0.062 mm (0.0008 ~ 0.0024 in.)
Service Limit: 0.15 mm (0.0059 in.)

★If any clearance exceeds the service limit, measure the diameter of each camshaft journal with a micrometer.

Camshaft Journal Diameter
Standard: 22.959 ~ 22.980 mm (0.9039 ~ 0.9047 in.)
Service Limit: 22.93 mm (0.9028 in.)

★If the camshaft journal diameter is less than the service limit, replace the camshaft with a new one, and measure the clearance again.
★If the clearance still remains out of the service limit, replace the cylinder head unit.

Camshaft Runout Inspection

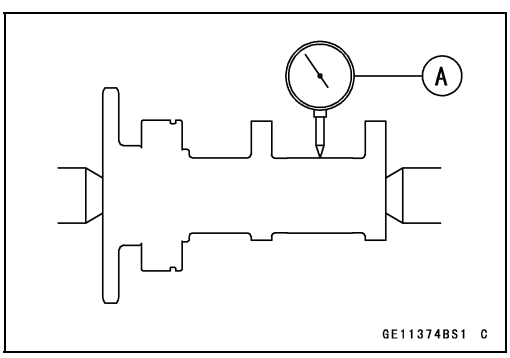

- Remove the camshafts (see Camshaft Removal).
- Set the camshaft in a camshaft alignment jig or on V blocks.
- Measure the runout with a dial gauge [A] at the specified place as shown.

★If the runout exceeds the service limit, replace the camshaft.

Camshaft Runout
Standard: TIR 0.02 mm (0.0008 in.) or less
Service Limit: TIR 0.1 mm (0.004 in.)

Camshafts

Cam Wear Inspection

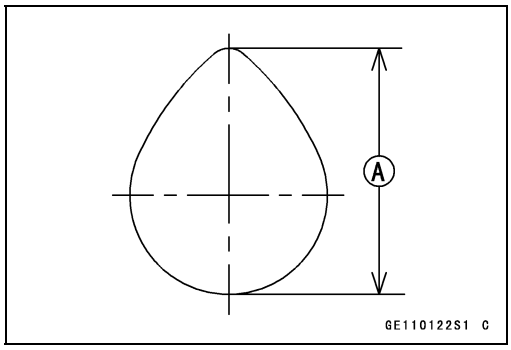

- Remove the camshafts (see Camshaft Removal).
- Measure the height [A] of each cam with a micrometer.

★If the cams are worn down past the service limit, replace the camshaft.

Cam Height

Standard:

Exhaust	**36.943 ~ 37.057 mm (1.4544 ~ 1.4589 in.)**
Intake	**37.743 ~ 37.857 mm (1.4859 ~ 1.4904 in.)**

Service Limit:

Exhaust	**36.84 mm (1.450 in.)**
Intake	**37.64 mm (1.482 in.)**

Cylinder Head

Cylinder Compression Measurement

- Warm up the engine thoroughly.
- Stop the engine.
- Remove:
  Fuel Tank (see Fuel Tank Removal in the Fuel System (DFI) chapter)
  Spark Plug (see Spark Plug Cleaning and Inspection in the Periodic Maintenance chapter)

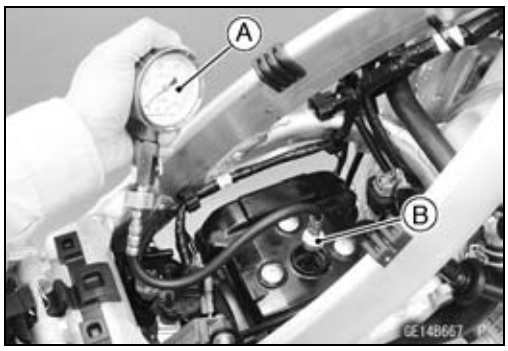

- Attach the compression gauge [A] and compression gauge adapter [B] firmly into the spark plug hole.
- Measure the compression pressure.

○With the throttle fully open, turn the engine over sharply with the kickstarter several times until the compression gauge stops rising; the compression is the highest reading obtainable.

Special Tools - Compression Gauge, 20 kgf/cm²: 57001-221
Compression Gauge Adapter, M10 × 1.0: 57001-1317

Cylinder Compression
Usable Range: 420 ~ 698 kPa (4.28 ~ 7.12 kgf/cm², 60.9 ~ 101 psi) at 5 times

- Install the removed parts (see appropriate chapters).

★If the compression pressure is not within the usable range, check the following table.

Problem	Diagnosis	Remedy (Action)
The cylinder compression is higher than the usable range.	Carbon accumulation on piston and in cylinder head (combustion chamber) is suspected due to damaged valve stem or piston oil rings.	Remove the carbon deposits and replace damaged parts if necessary.
	Incorrect cylinder head gasket thickness	Replace the gasket with a standard one.
	Damaged auto-decompressor spring or decompressor do not move smoothly.	Replace the spring or auto-decompressor.
The cylinder compression is lower than the usable range.	Exhaust gas leakage around cylinder head.	Replace the damaged gasket and inspect cylinder head warp.
	Incorrect seating surface of valve	Repair seating surface if possible.
	Valve clearance is too narrow.	Adjust the valve clearance.
	Piston/cylinder clearance is too wide.	Replace the piston and/or cylinder.
	Piston seizure	Inspect the cylinder and piston; repair or replace them if necessary.
	Bad condition of piston ring and/or piston ring grooves	Replace the piston and/or the piston rings.
	Auto-decompressor do not move smoothly.	Replace the auto-decompressor.

Cylinder Head Removal

- Remove:
  Cylinder Head Cover (see Cylinder Head Cover Removal)
  Camshafts (see Camshaft Removal)
  Exhaust Pipe (see Exhaust Pipe Removal)

Cylinder Head

- Clear the breather hose [A].

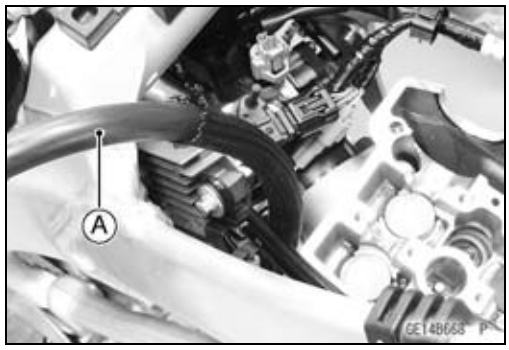

- Remove (Both Sides):
  Upper Engine Bracket [A] (see Engine Removal in the Engine Removal/Installation chapter)
- Remove:
  Cylinder Head Bolts (M6) [B]
  Clamp [C]
- Loosen:
  Cylinder Bolt [D]
  Throttle Body Assy Clamp Bolt [E]

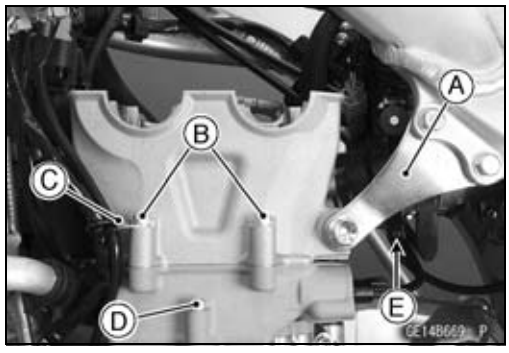

- Slide the clamp [A] and disconnect the water hose [B].

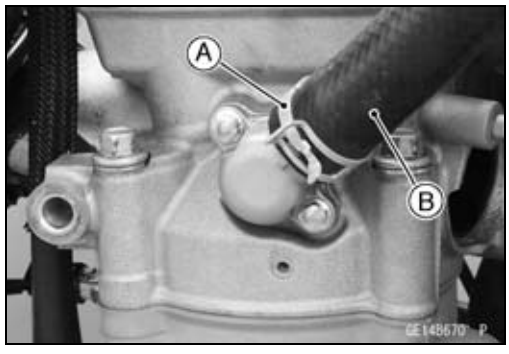

- Remove the cylinder head bolts (M10) [A].

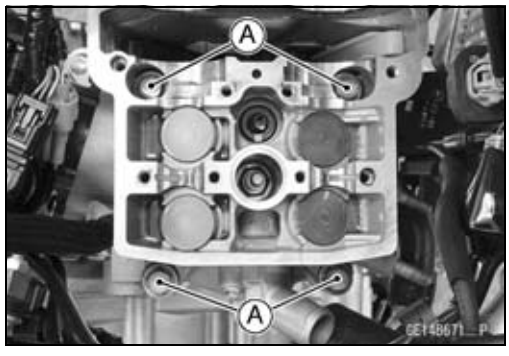

- Remove the cylinder head [A] while pulling the throttle body assy off the throttle body assy holder.

NOTE

○*When do not remove the cylinder head easily, tap lightly up with a plastic mallet [B] to separate the cylinder head from the cylinder.*

Cylinder Head

○Take care not to damage the chain guides [A].

NOTICE
Do not touch the radiator core. This could damage the radiator fins, resulting in loss of cooling efficiency.

● Remove the cylinder head gasket [B].

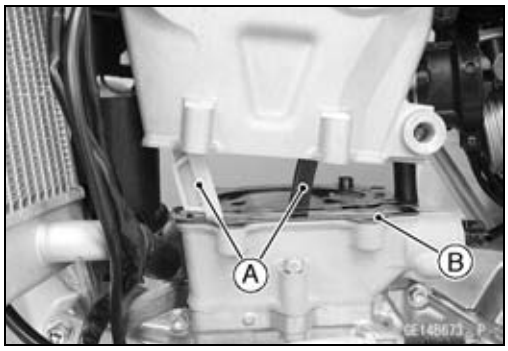

Cylinder Head Installation

● Fit the projections [A] of the front camshaft chain guide in the grooves [B] of the cylinder.

○Insert the guide end [C] into the recess [D] of the crankcase securely.

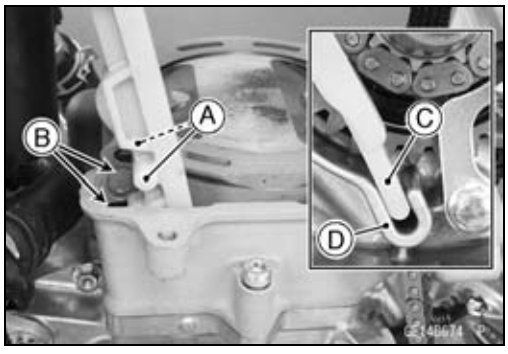

● Replace the cylinder head gasket with a new one.

● Install:

Dowel Pins [A]

Cylinder Head Gasket [B]

● Install the cylinder head while inserting the throttle body assy to the throttle body assy holder.

NOTE

○*The camshaft caps are machined with the cylinder head; therefore, if a new cylinder head is installed, use the caps that are supplied with the new head.*

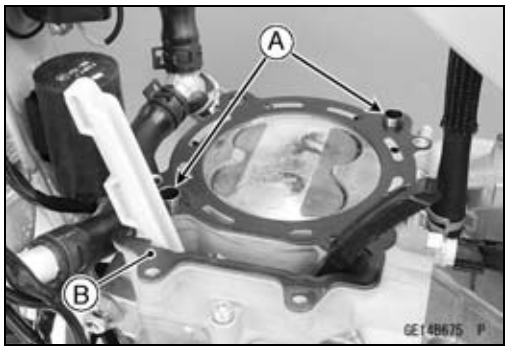

● Replace the cylinder head bolt (M10) washers with new ones.

○These washers could leak oil if reused.

● Apply molybdenum disulfide oil solution to the following areas.

Cylinder Head Bolt (M10) Washers (Both Sides) [A]

Cylinder Head Bolt (M10) Threads [B]

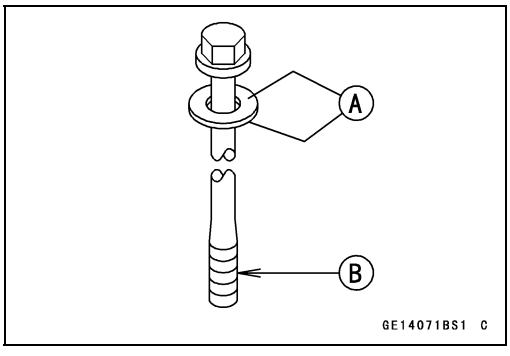

● Tighten the cylinder head bolts (M10) in the numbered sequence [1 ~ 4].

Torque - Cylinder Head Bolts (M10): 59 N·m (6.0 kgf·m, 44 ft·lb)

L = 140 mm (5.51 in.) [1, 3]

L = 127 mm (5.00 in.) [2, 4]

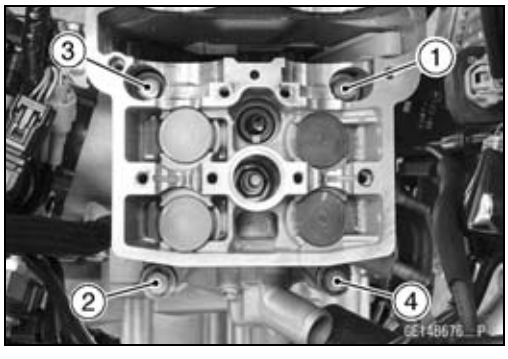

Cylinder Head

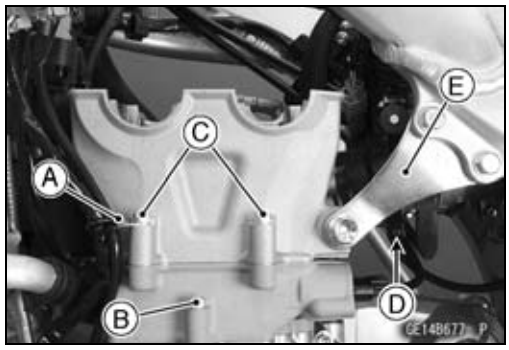

- Install the clamp [A].
- Tighten:

Torque - Cylinder Bolt [B]: 12 N·m (1.2 kgf·m, 106 in·lb)
Cylinder Head Bolts (M6) [C]: 12 N·m (1.2 kgf·m, 106 in·lb)
Throttle Body Assy Clamp Bolt [D]: 2.0 N·m (0.20 kgf·m, 18 in·lb)

NOTE

○*After tightening the cylinder head bolts (M10), tighten the cylinder bolt and cylinder head bolt (M6).*

- Install (Both Sides):
  Upper Engine Bracket [E] (see Engine Installation in the Engine Removal/Installation chapter)
- Install the removed parts (see appropriate chapters).

Cylinder Head Cleaning

- Refer to the Cylinder Head Warp Inspection in the Periodic Maintenance chapter.

Cylinder Head Warp Inspection

- Refer to the Cylinder Head Warp Inspection in the Periodic Maintenance chapter.

Valves

Valve Clearance Inspection

- Refer to the Valve Clearance Inspection in the Periodic Maintenance chapter.

Valve Clearance Adjustment

- Refer to the Valve Clearance Adjustment in the Periodic Maintenance chapter.

Valve Removal

- Remove the cylinder head (see Cylinder Head Removal).
- Remove the valve lifter and shim.

NOTE

○*Mark and record the locations of the valve lifters and shims so that they can be reinstalled in their original positions.*

- Using the valve spring compressor assembly [A] and adapter [B], compress the valve spring and then remove the split keepers.

  Special Tools - Valve Spring Compressor Assembly: 57001-241
  Valve Spring Compressor Adapter, ϕ24: 57001-1586

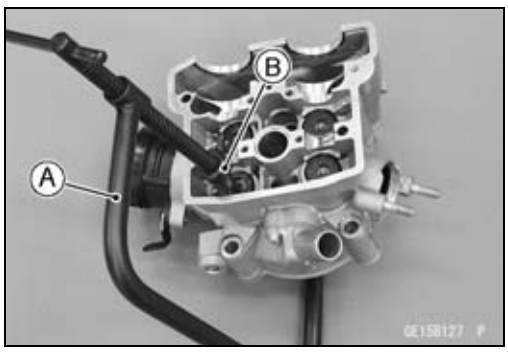

- Remove:
  Spring Retainer
  Inner Valve Spring and Outer Valve Spring
  Valve
  Oil Seal
  Spring Seat

Valves

Valve Installation

NOTICE
Do not lap the valve to the valve seat, using the grinding compound. It will come off oxide film treated surface of the valve.

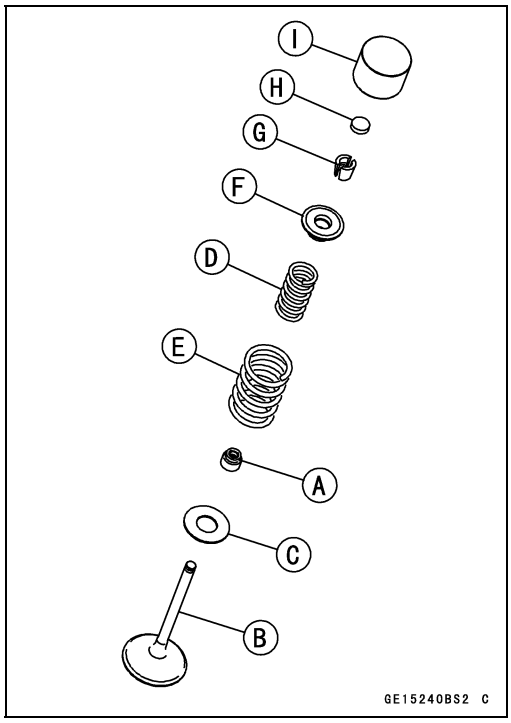

- Visually inspect the valve surface.

★If the surface is damaged, replace the valve.

- Replace the oil seal [A] with a new one.
- Apply a thin coat of molybdenum disulfide grease to the valve stem [B] and install the valve.
- Check to make sure that the valve moves up and down smoothly.
- Check to make sure that the valve and valve seat are making proper contact.
- Install:
  Oil Seal
  Spring Seat [C]
- Install the inner valve spring [D] and outer valve spring [E] so that the closed coil end faces the spring seat.

○Turn the painted side of the valve spring to the spring retainer [F].
  Exhaust - Red Paint
  Intake - Violet Paint

- Install the spring retainer.
- Compress the valve spring to install the split keepers [G] in order to secure the spring retainer in place.

Special Tools - Valve Spring Compressor Assembly: 57001-241
Valve Spring Compressor Adapter, ϕ24: 57001-1586

- Install the shim to original position.

○The shim [H] must be installed with its thickness indication facing up.

- Apply engine oil to the valve lifter [I] surface, and install the lifter.

Valve Guide Removal

- Remove:
  Valve (see Valve Removal)
  Oil Seal
  Spring Seat
- Heat the area around the valve guide up to 120 ~ 150°C (248 ~ 302°F).

NOTICE
Do not heat the cylinder head with a torch. This will warp the cylinder head. Soak the cylinder head in oil and heat the oil.

- Hammer lightly on the valve guide arbor [A] to remove the guide.

  Special Tool - Valve Guide Arbor, ϕ5.5: 57001-1021

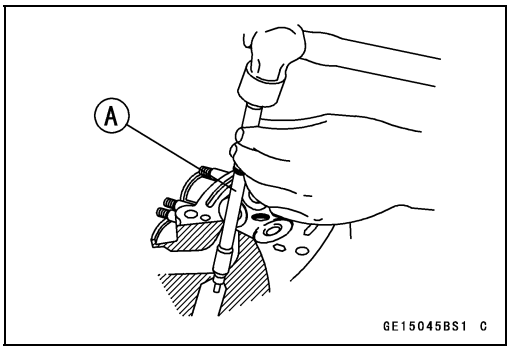

Valve Guide Installation

- Apply a thin coat of engine oil to the outer surface of the valve guide.
- Heat the area around the valve guide up to 120 ~ 150°C (248 ~ 302°F).

NOTICE
Do not heat the cylinder head with a torch. This will warp the cylinder head. Soak the cylinder head in oil and heat the oil.

- Assemble the valve guide driver [A] and valve guide driver attachment G [B].
- Using the valve guide driver, press and insert the valve guide in until the valve guide driver surface [C] touches the head surface.
- When install the exhaust valve guide, using the attached spacer (t = 2.0) [D] of the attachment D.
  Exhaust 11.35 ~ 11.55 mm (0.437 ~ 0.445 in.) [E]
  Intake 13.35 ~ 13.55 mm (0.516 ~ 0.524 in.) [F]

  Special Tools - Valve Guide Driver: 57001-1564
  Valve Guide Driver Attachment D: 57001-1659
  Valve Guide Driver Attachment, G: 57001-1728

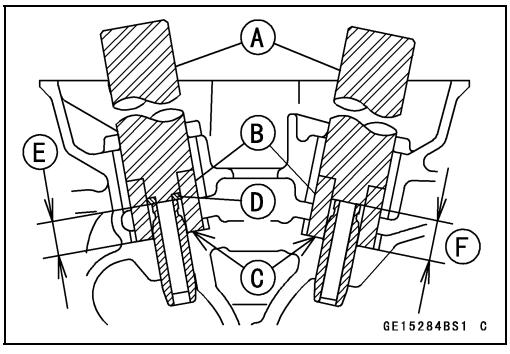

- Ream the valve guide with valve guide reamer [A], even if the old guide is reused.

  Special Tool - Valve Guide Reamer, ϕ5.5: 57001-1079

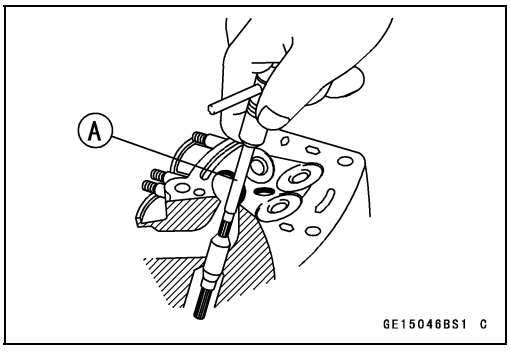

Valves

Valve/Valve Guide Clearance Measurement (Wobble Method)

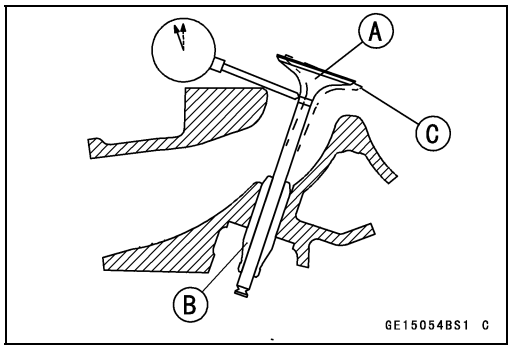

If a small bore gauge is not available, inspect the valve guide wear by measuring the valve/valve guide clearance with the wobble method as indicated below.

- Insert a new valve [A] into the guide [B] and set a dial gauge against the stem perpendicular to it as close as possible to the cylinder head mating surface.
- Move the stem back and forth [C] to measure the valve/valve guide clearance.

- Repeat the measurement in a direction at a 90° angle to the first measurement.

★If the reading exceeds the service limit, replace the guide.

NOTE

○*The reading is greater than the actual valve/valve guide clearance because the measurement is taken outside of the guide.*

Valve/Valve Guide Clearance (Wobble Method)

Standard:

Exhaust	**0.08 ~ 0.15 mm (0.0031 ~ 0.0059 in.)**
Intake	**0.05 ~ 0.12 mm (0.0020 ~ 0.0047 in.)**

Service Limit:

Exhaust	**0.32 mm (0.013 in.)**
Intake	**0.30 mm (0.012 in.)**

Valve Seat Inspection

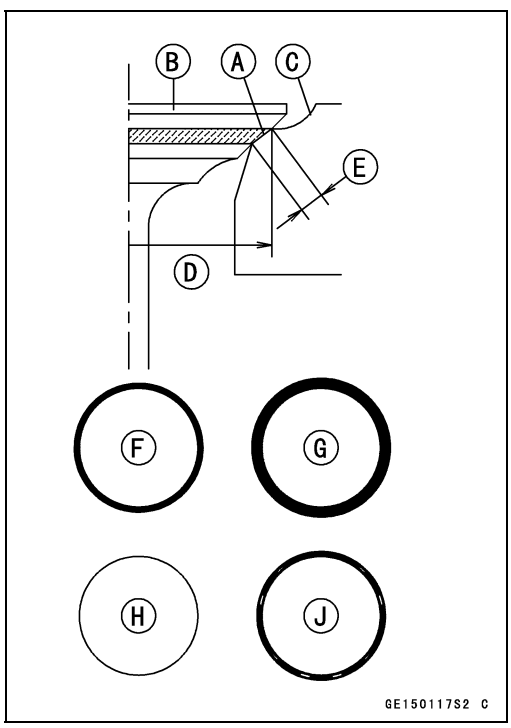

- Remove the valve (see Valve Removal).
- Check the valve seating surface [A] between the valve [B] and valve seat [C].
- Measure the outside diameter [D] of the seating pattern on the valve seat.

★If the outside diameter is too large or too small, repair the seat (see Valve Seat Repair).

Valve Seating Surface Outside Diameter

Standard:

Exhaust	**30.4 ~ 30.6 mm (1.197 ~ 1.205 in.)**
Intake	**35.4 ~ 35.6 mm (1.394 ~ 1.402 in.)**

○Measure the seat width [E] of the portion where there is no build-up carbon (white portion) of the valve seat with a vernier caliper.

Good [F]

★If the width is too wide [G] , too narrow [H] or uneven [J], repair the seat (see Valve Seat Repair).

Valve Seating Surface Width

Standard:

Exhaust	**0.8 ~ 1.2 mm (0.03 ~ 0.05 in.)**
Intake	**0.5 ~ 1.0 mm (0.02 ~ 0.04 in.)**

Valve Seat Repair

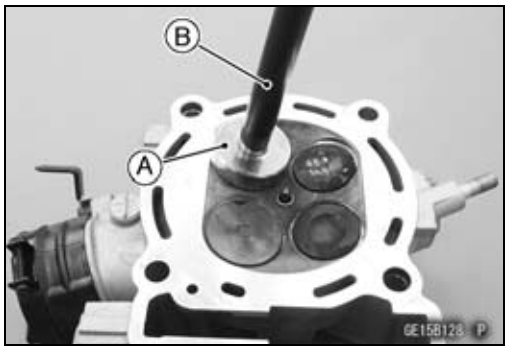

- For the instructions on how to use the valve seat cutter [A], follow the operation manual provided by the tool manufacturer.

Special Tools - Valve Seat Cutter Holder, ϕ5.5 [B]: 57001-1125
Valve Seat Cutter Holder Bar: 57001-1128

Exhaust: Valve Seat Cutter, 45° - ϕ35: 57001-1116
Valve Seat Cutter, 32° - ϕ35: 57001-1121
Valve Seat Cutter, 55° - ϕ35: 57001-1247
Intake: Valve Seat Cutter, 45° - ϕ40: 57001-1496
Valve Seat Cutter, 32° - ϕ38.5: 57001-1122
Valve Seat Cutter, 55° - ϕ38.5: 57001-1497

★If the tool manufacturer's instructions are not available, operate in accordance with the following procedure.

Seat Cutter Operation Care

1. This valve seat cutter is developed to grind the valve for repair. Therefore the cutter must not be used for other purposes than seat repair.
2. Do not drop or shock the valve seat cutter, or the diamond particles may fall off.
3. Do not fail to apply engine oil to the valve seat cutter before grinding the seat surface. Also wash off ground particles sticking to the cutter with washing oil.

NOTICE
Do not use a wire brush to remove the metal particles from the cutter. It will take off the diamond particles.

4. Setting the valve seat cutter holder in position, operate the cutter in one hand. Do not apply too much force to the diamond portion.

NOTE

○*Prior to grinding, apply engine oil to the cutter and during the operation, wash off any ground particles sticking to the cutter with washing oil.*

5. After use, wash it with washing oil and apply thin layer of engine oil before storing.

Marks Stamped on the Cutter

The marks stamped on the back of the cutter [A] represent the following.

60° ..... Cutter Angle [B]
37.5ϕ ..... Cutter Outer Diameter [C]

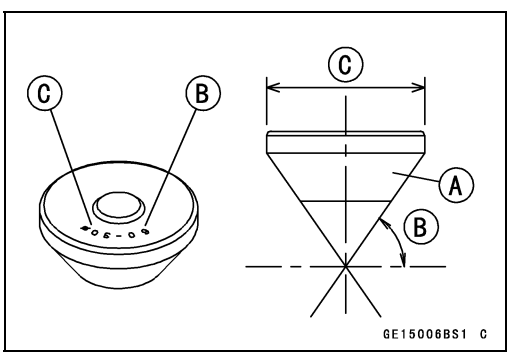

Valves

Repair Operating Procedures

- Clean the seat area carefully.
- Coat the seat with machinist's dye.
- Fit a 45° cutter into the holder and slide it into the valve guide.
- Press down lightly on the handle and turn it right or left. Grind the seating surface only until it is smooth.

NOTICE
Do not grind the seat too much. Overgrinding will reduce valve clearance by sinking the valve into the head. If the valve sinks too far into the head, it will be impossible to adjust the clearance, and the cylinder head must be replaced.

Widened Width [A] of engagement by machining with 45° cutter
Ground Volume [B] by 32° cutter
32° [C]
Correct Width [D]
Ground Volume [E] by 55° cutter
55° [F]

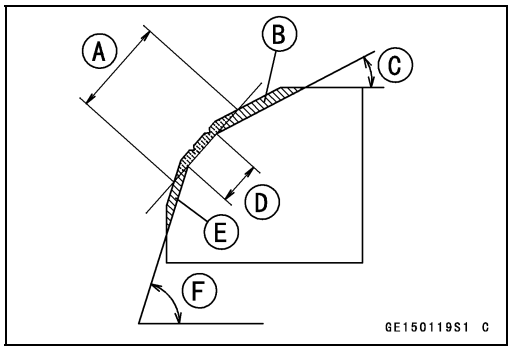

- Measure the outside diameter of the seating surface with a vernier caliper.

★If the outside diameter of the seating surface is too small, repeat the 45° [A] grind until the diameter is within the specified range.
Original Seating Surface [B]

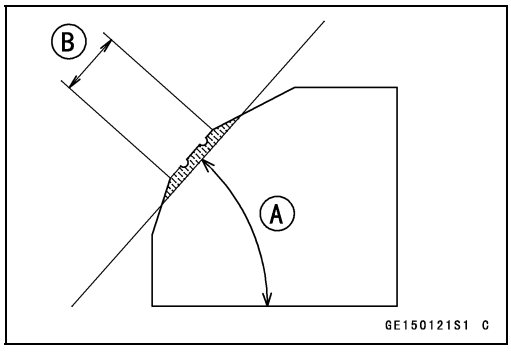

NOTE

○*Remove all pittings of flaws from 45° ground surface.*
○*After grinding with 45° cutter, apply thin coat of machinist's dye to seating surface. This makes seating surface distinct and 32° and 55° grinding operation easier.*
○*When the valve guide is replaced, be sure to grind with 45° cutter for centering and good contact.*

★If the outside diameter [A] of the seating surface is too large, make the 32° [B] grind described below.

★If the outside diameter of the seating surface is within the specified range, measure the seat width as described below.

- Grind the seat at a 32° angle until the seat outside diameter is within the specified range.

○To make the 32° grind, fit a 32° cutter into the holder, and slide it into the valve guide.
○Turn the holder one turn at a time while pressing down very lightly. Check the seat after each turn.

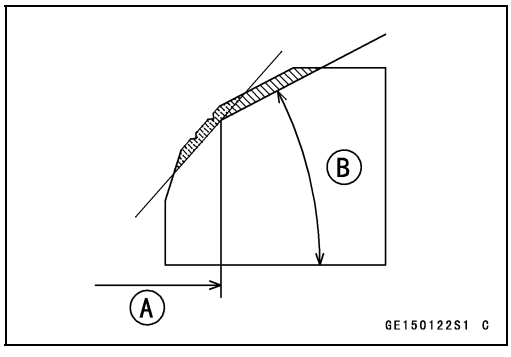

Valves

NOTICE

The 32° cutter removes material very quickly. Check the seat outside diameter frequently to prevent overgrinding.

○After making the 32° grind, return to the seat outside diameter measurement step above.

● To measure the seat width, use a vernier caliper to measure the width of the 45° angle portion of the seat at several places around the seat.

★If the seat width is too narrow, repeat the 45° grind until the seat is slightly too wide, and then return to the seat outside diameter measurement step above.

★If the seat width is too wide, make the 55° [A] grind described below.

★If the seat width is within the specified range, lap the valve to the seat as described below.

● Grind the seat at a 55° angle until the seat width is within the specified range [B].

○To make the 55° grind, fit a 55° cutter into the holder, and slide it into the valve guide.

○Turn the holder, while pressing down lightly.

○After making the 55° grind, return to the seat width measurement step above.

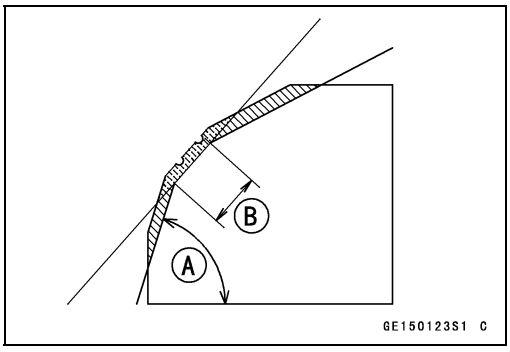

NOTICE

Do not lap the valve to the valve seat, using the grinding compound. It will come off oxide film treated surface of the valve.

● When the engine is assembled, be sure to adjust the valve clearance (see Valve Clearance Adjustment in the Periodic Maintenance chapter).

Valves

Valve Seat Repair

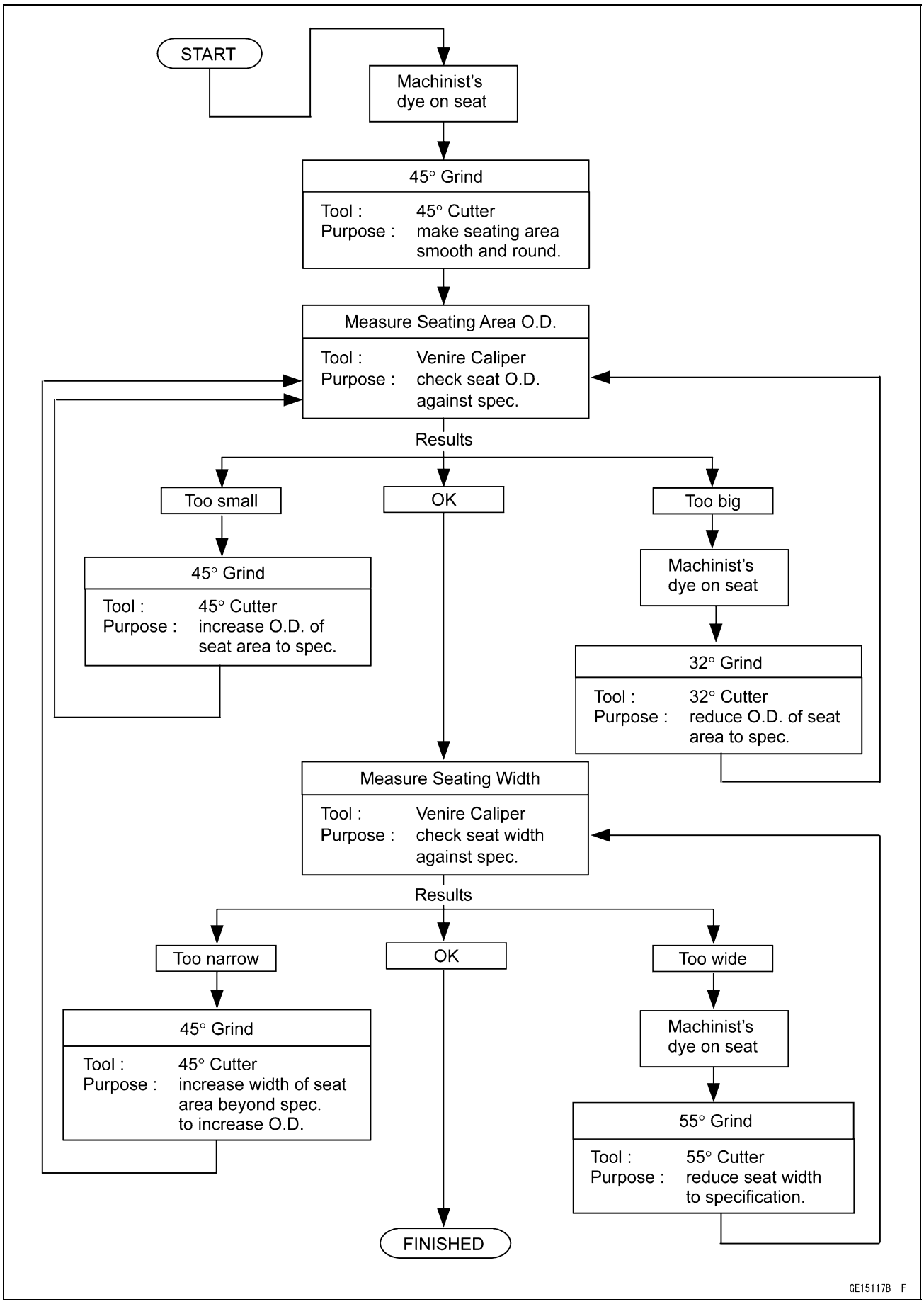

Cylinder and Piston

Cylinder Removal

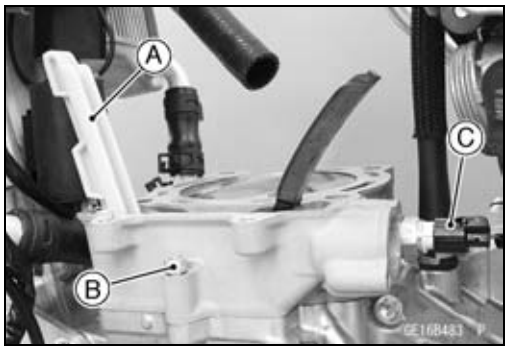

- Remove:
  Cylinder Head (see Cylinder Head Removal)
  Front Camshaft Chain Guide [A]
  Cylinder Bolt [B]
  Water Temperature Sensor Connector [C] (Disconnect)
- Tap lightly up with a plastic mallet to separate the cylinder from the crankcase.
- Remove the cylinder base gasket.

Piston Removal

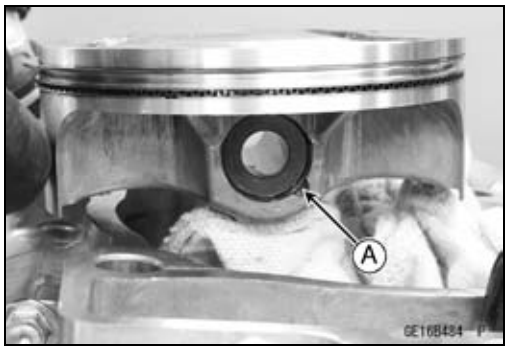

- Remove the cylinder (see Cylinder Removal).
- Remove the piston pin snap ring [A].

NOTE

○*Lay a clean cloth under the piston, to prevent dropping dirt or parts into the crankcase.*

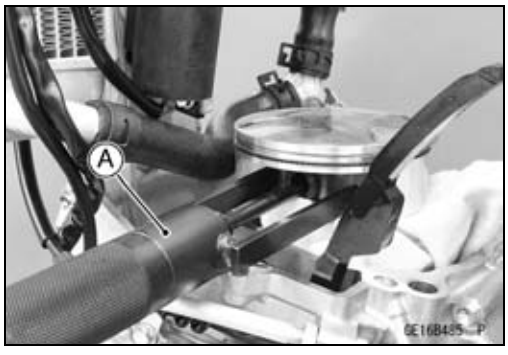

- Remove the piston pin, using a piston pin puller [A].
  Special Tool - Piston Pin Puller: 57001-1568
- Remove the piston.

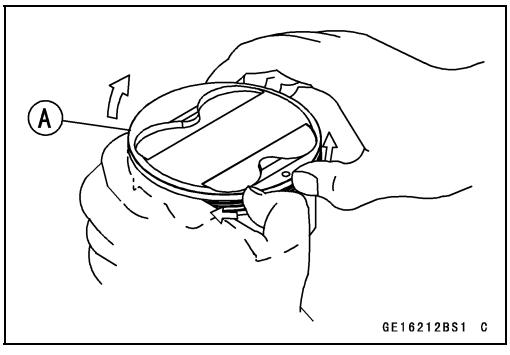

- Carefully spread the piston ring opening with your thumbs and then push up on the opposite side of the ring [A] to remove it.
- Remove the oil ring in the same procedure.

Cylinder and Piston Installation

NOTE

○*If a new piston or cylinder is used, check piston/cylinder clearance (see Piston/Cylinder Clearance Inspection in the Periodic Maintenance chapter), and use new piston rings.*

Cylinder and Piston

NOTE

○*The oil ring rails have no "top" or "bottom".*

- Install the oil ring expander [A] in the bottom piston ring groove so the ends [B] butt together.
- Install the oil ring steel rails, one above the expander and one below it.

○Spread the rail with your thumbs, but only enough to fit the rail over the piston.

○Release the rail into the bottom piston ring groove.

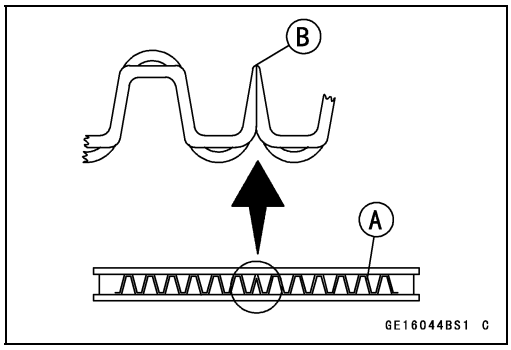

- Install the top ring [A] so that the "R" mark [B] faces up.

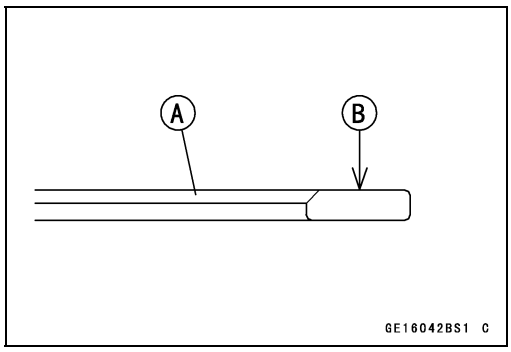

- Apply engine oil to the inside wall of the connecting rod small end.
- Install the piston as shown.
  Circle Mark [A]
  Front [B]
- Install the piston pin.

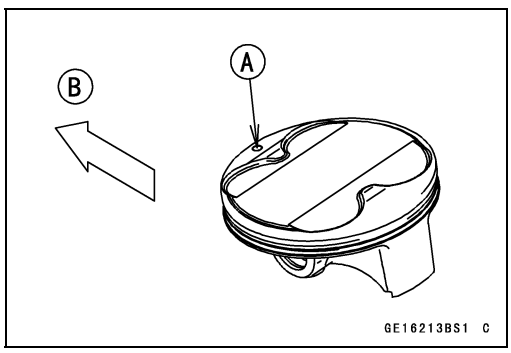

- Fit a new piston pin snap ring into the side of the piston so that the ring opening [A] does not coincide with the slit [B] of the piston pin hole.

○When installing the piston pin snap ring, compress it only enough to install it and no more.

NOTICE
Do not reuse snap rings, as removal weakens and deforms them. They could fall out and score the cylinder wall.

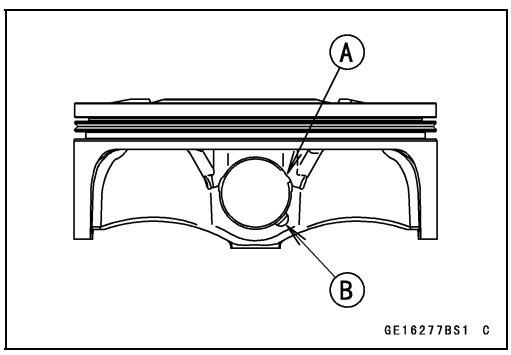

- Replace the cylinder base gasket with a new one.
- Install:
  Dowel Pins [A]
  Cylinder Base Gasket [B]

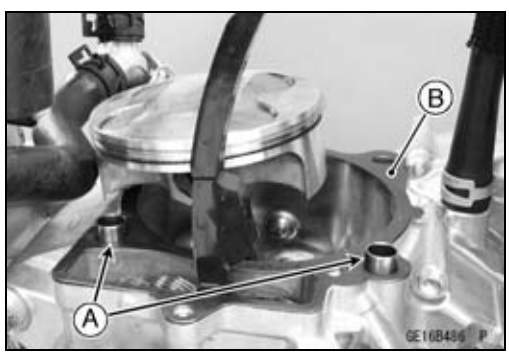

Cylinder and Piston

- The piston ring openings must be positioned as shown in the figure. The openings of the oil ring steel rails must be about 20° [A] of angle from the opening of the oil ring expander.
  Circle Mark [B]
  Top Ring [C]
  Upper Oil Ring Steel Rail [D]
  Oil Ring Expander [E]
  Lower Oil Ring Steel Rail [F]

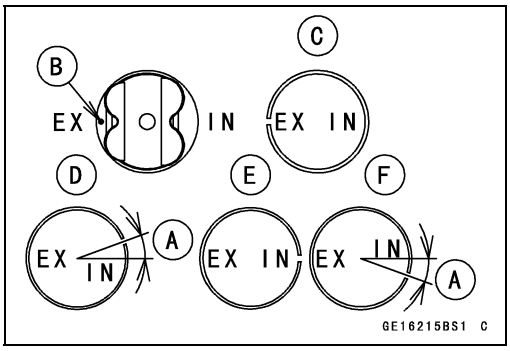

- Apply engine oil to the cylinder bore and the piston side wall.
- Install the cylinder while compressing the piston rings with your fingers or the special tool [A].

○Upturn the chamfering side of the belt.

Special Tools - Piston Ring Compressor Grip: 57001-1095
Piston Ring Compressor Belt, ϕ95 ~ ϕ108: 57001-1358

- Install:
  Cylinder Bolt
  Front Camshaft Chain Guide
- Install the removed parts (see appropriate chapters).

Cylinder Wear Inspection

- Refer to the Cylinder Wear Inspection in the Periodic Maintenance chapter.

Piston Wear Inspection

- Using a micrometer, measure the outside diameter [A] of the piston **7.5 mm (0.30 in.)** [B] up from the bottom of the piston at a right angle to the direction of the piston pin.

Piston Diameter
Standard: 95.970 ~ 95.980 mm (3.7783 ~ 3.7787 in.)
Service Limit: 95.82 mm (3.772 in.)

★If the piston outside diameter is smaller than the service limit, replace the piston.

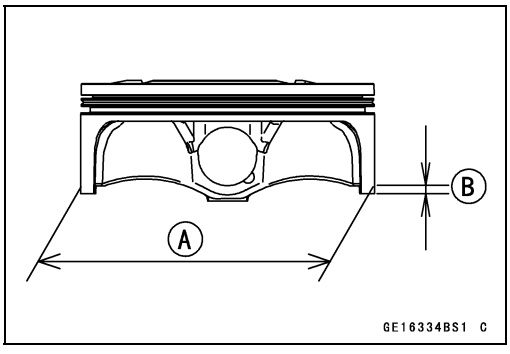

Piston/Cylinder Clearance Inspection

- Refer to the Piston/Cylinder Clearance in the Periodic Maintenance chapter.

Cylinder and Piston

Piston Ring/Ring Groove Clearance Inspection

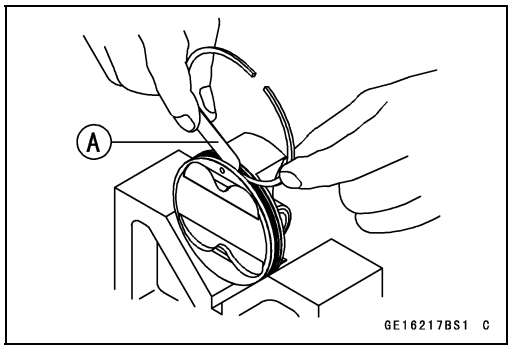

- Check for uneven groove wear by inspecting the ring seating.

★The rings should fit perfectly parallel to groove surfaces. If not, replace the piston and all the piston rings.

- With the piston rings in their grooves, make several measurements with a thickness gauge [A] to determine piston ring/groove clearance.

Piston Ring/Ring Groove Clearance

Standard:

Top	**0.040 ~ 0.080 mm (0.0016 ~ 0.0032 in.)**

Service Limit:

Top	**0.18 mm (0.0071 in.)**

★If the piston ring groove clearance is greater than the service limit, measure the ring thickness and groove width as follows to decide whether to replace the rings, the piston or both.

Piston Ring Groove Width Inspection

- Measure the groove width at several points around the piston with a vernier caliper.

Piston Ring Groove Width

Standard:

Top	**0.83 ~ 0.85 mm (0.033 ~ 0.034 in.)**

Service Limit:

Top	**0.93 mm (0.037 in.)**

★If any of the groove widths exceeds the service limit, replace the piston.

Piston Ring Thickness Inspection

- Measure the thickness at several points around the ring with a micrometer.

Piston Ring Thickness

Standard:

Top	**0.77 ~ 0.79 mm (0.030 ~ 0.031 in.)**

Service Limit:

Top	**0.70 mm (0.028 in.)**

★If any of the measurements is less than the service limit, replace all the rings.

NOTE

○*When using new rings in a used piston, check for uneven groove wear. The rings should fit perfectly parallel to the groove sides. If not, replace the piston.*

Piston Ring End Gap Measurement

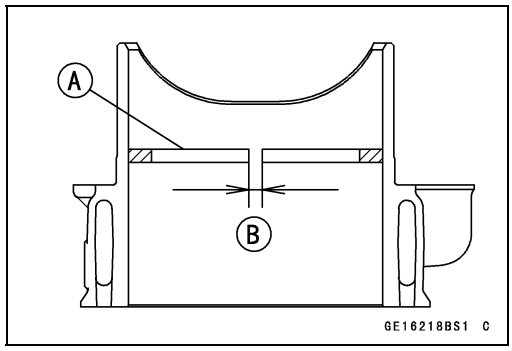

- Place the piston ring [A] inside the cylinder, using the piston to locate the ring squarely in place. Set it close to the bottom of the cylinder, where cylinder wear is low.
- Measure the gap [B] between the ends of the ring with a thickness gauge.

Piston Ring End Gap

Standard:

Top	**0.23 ~ 0.33 mm (0.0091 ~ 0.0130 in.)**
Oil	**0.15 ~ 0.50 mm (0.0059 ~ 0.0197 in.)**

Service Limit:

Top	**0.6 mm (0.02 in.)**
Oil	**0.8 mm (0.03 in.)**

★If the ring end gap exceeds the service limit, replace all the rings.

Piston, Piston Pin, Connecting Rod Wear Inspection

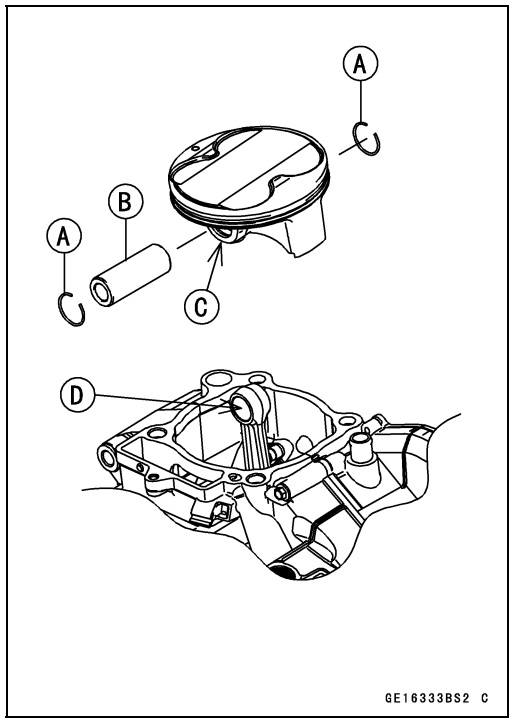

- Visually inspect the snap rings [A] still fitted in place.

★If the ring shows weakness or deformation, replace the ring. Also if the pin hole groove shows excessive wear, replace the piston.

- Measure the diameter of the piston pin [B] with a micrometer.

Piston Pin Diameter

Standard:	**18.991 ~ 19.000 mm (0.7477 ~ 0.7480 in.)**
Service Limit:	**18.96 mm (0.7465 in.)**

★If the piston pin diameter is less than the service limit at any point, replace the piston pin.

- Using a cylinder gauge, measure the diameter of both piston pin holes [C] in the piston and the inside diameter of the connecting rod small end [D].

Piston Pin Hole Diameter

Standard:	**19.004 ~ 19.010 mm (0.7482 ~ 0.7484 in.)**
Service Limit:	**19.08 mm (0.7512 in.)**

Connecting Rod Small End Inside Diameter

Standard:	**19.019 ~ 19.030 mm (0.7488 ~ 0.7492 in.)**
Service Limit:	**19.07 mm (0.7508 in.)**

★If either piston pin hole diameter exceeds the service limit, replace the piston.

★If the connecting rod small end inside diameter exceeds the service limit, replace the connecting rod.

Throttle Body Holder

Throttle Body Assy Holder Removal

- Remove:
  Throttle Body Assy (see Throttle Body Assy Removal in the Fuel System (DFI) chapter)
  Throttle Body Assy Clamp [A]
  Throttle Body Assy Holder Screws [B]
  Clamp [C]
  Throttle Body Assy Holder [D]

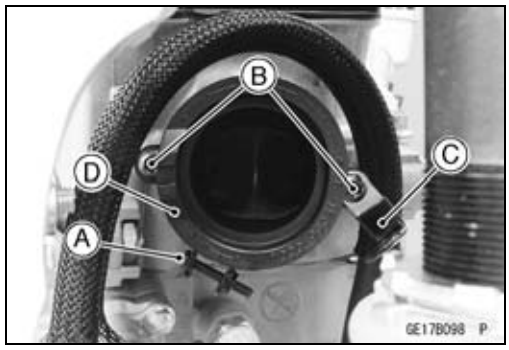

Throttle Body Assy Holder Installation

- Replace the O-ring [A] with a new one.
- Apply grease to the O-ring.
- Install the O-ring to the throttle body assy holder [B].

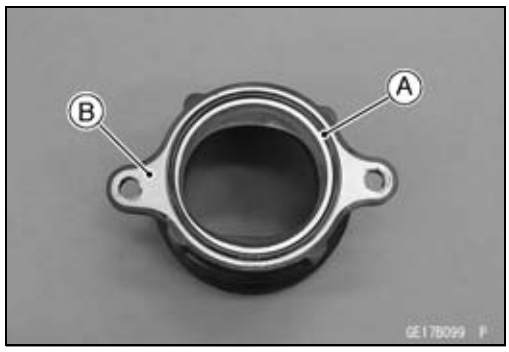

- Install the throttle body assy holder so that the groove [A] faces left side.
- Apply a non-parmanent locking agent to the threads of the throttle body assy holder screws [B].
- Install the clamp [C].
- Tighten:

  Torque - Throttle Body Assy Holder Screws: 10 N·m (1.0 kgf·m, 89 in·lb)

- Install:
  Throttle Body Assy Clamp [D]
  Throttle Body Assy (see Throttle Body Assy Installation in the Fuel System (DFI) chapter)

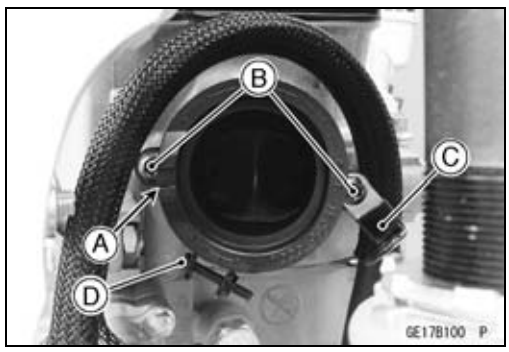

Muffler

⚠ WARNING

The muffler can become extremely hot during normal operation and cause severe burns. Do not remove the muffler while it is hot.

Muffler Body Removal

- Remove the right side cover (see Side Cover Removal in the Frame chapter).
- Loosen the muffler clamp bolt [A].
- Remove the muffler mounting bolts [B], and pull out the muffler body [C] backward.

Exhaust Pipe Removal

- Loosen the muffler clamp bolt [A].
- Remove:
  Exhaust Pipe Holder Nuts [B]
  Exhaust Pipe [C]

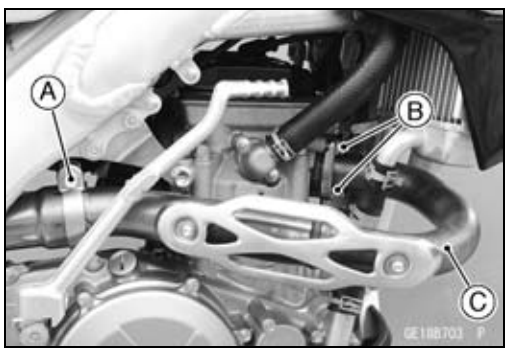

Muffler Installation

- When installing the exhaust pipe cover [A], tighten the front side bolt [B] first and then tighten the rear side bolt [C].
  Spring Washers [D]
  Washers [E]

○After tightening the exhaust pipe cover bolts temporarily, tighten its bolts to the specified torque.

Torque - Exhaust Pipe Cover Bolts: 12 N·m (1.2 kgf·m, 106 in·lb)

- Replace the exhaust pipe gasket [F] with a new one.
- Apply grease to the exhaust pipe gasket, and install it to the engine.
- Replace the muffler pipe gasket [G] with a new one, and install it to the muffler body.

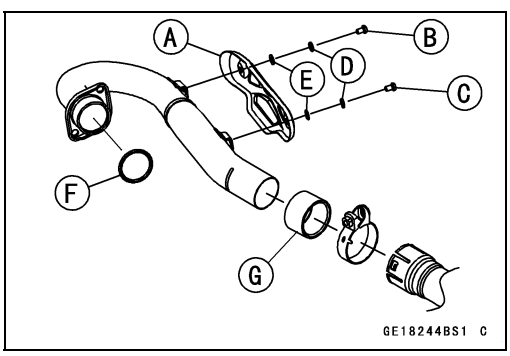

Muffler

- Install the exhaust pipe and muffler body temporary.
- Align the slit [A] of the muffler clamp with the projection of the muffler body.
  Viewed from behind [B]

○Face the muffler clamp bolt [C] upward.

- First, temporarily tighten the exhaust pipe holder nuts [D], and then temporarily tighten the muffler mounting bolt (rear) [E].
- Second, tighten the muffler mounting bolt (front) [F], and then tighten the muffler mounting bolt (rear).

  Torque - Muffler Mounting Bolts: 21 N·m (2.1 kgf·m, 15 ft·lb)

- Third, tighten the exhaust pipe holder nuts.

  Torque - Exhaust Pipe Holder Nuts: 15 N·m (1.5 kgf·m, 11 ft·lb)

- Lastly, tighten the muffler clamp bolt.

  Torque - Muffler Clamp Bolt: 11 N·m (1.1 kgf·m, 97 in·lb)

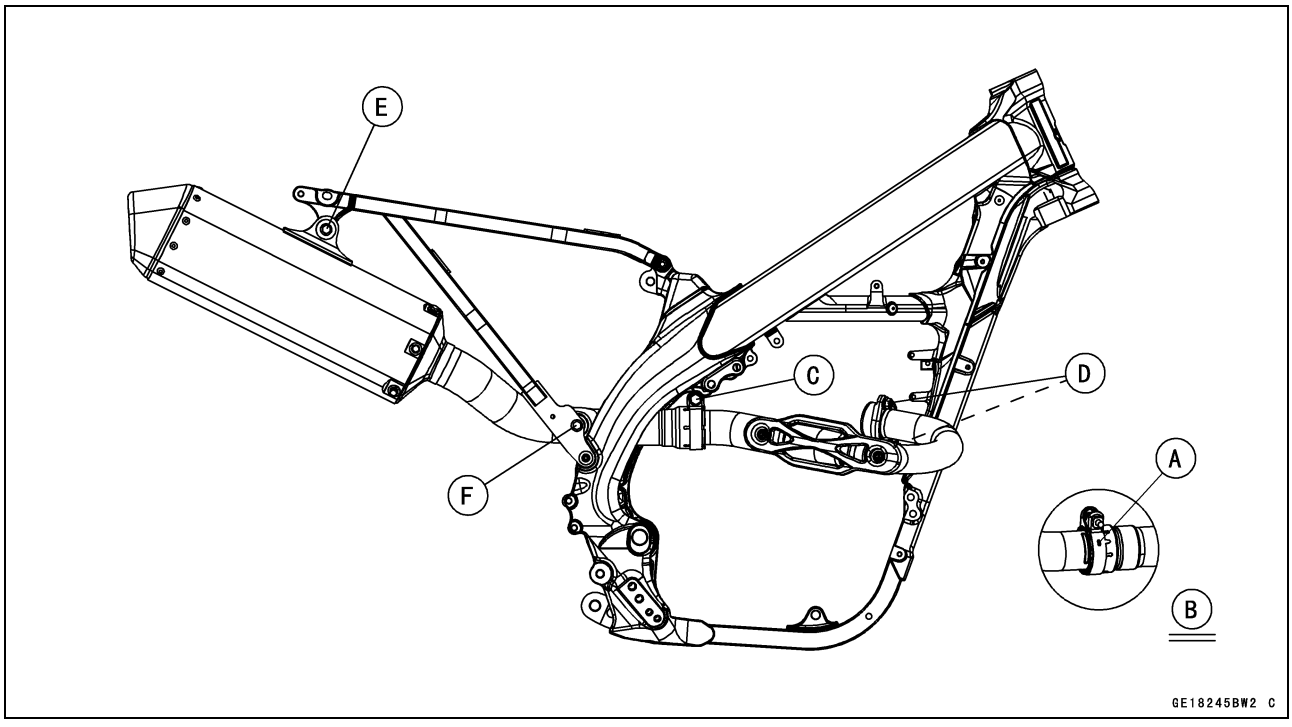

- Thoroughly warm up the engine, wait until the engine cools down, and then retighten all the bolts and nuts.

Silencer Wool Replacement

- Refer to the Silencer Wool Replacement in the Periodic Maintenance chapter.

Clutch

Table of Contents

Exploded View 6-2
Specifications 6-4
Special Tools 6-5
Clutch Lever and Cable 6-6
- Clutch Lever (Clutch Cable) Free Play Inspection 6-6
- Clutch Lever (Clutch Cable) Free Play Adjustment 6-6
- Clutch Lever Installation 6-6
- Clutch Cable Removal 6-6
- Clutch Cable Installation 6-7
- Clutch Cable Inspection and Lubrication 6-8

Clutch Cover and Right Engine Cover 6-9
- Clutch Cover Removal 6-9
- Clutch Cover Installation 6-9
- Right Engine Cover Removal 6-9
- Right Engine Cover Installation 6-10
- Right Engine Cover Assembly 6-11

Clutch 6-12
- Clutch Removal 6-12
- Clutch Installation 6-13
- Clutch Plate Assembly Free Play Inspection/Adjustment 6-16
- Release Shaft Removal 6-16
- Release Shaft Installation 6-17
- Clutch Plates Wear, Damage Inspection 6-17
- Clutch Plates Warp Inspection 6-17
- Clutch Spring Free Length Inspection 6-17
- Clutch Housing Finger Damage Inspection 6-17
- Friction Plate/Clutch Housing Clearance Inspection 6-17
- Clutch Hub Spline Damage Inspection 6-18

Exploded View

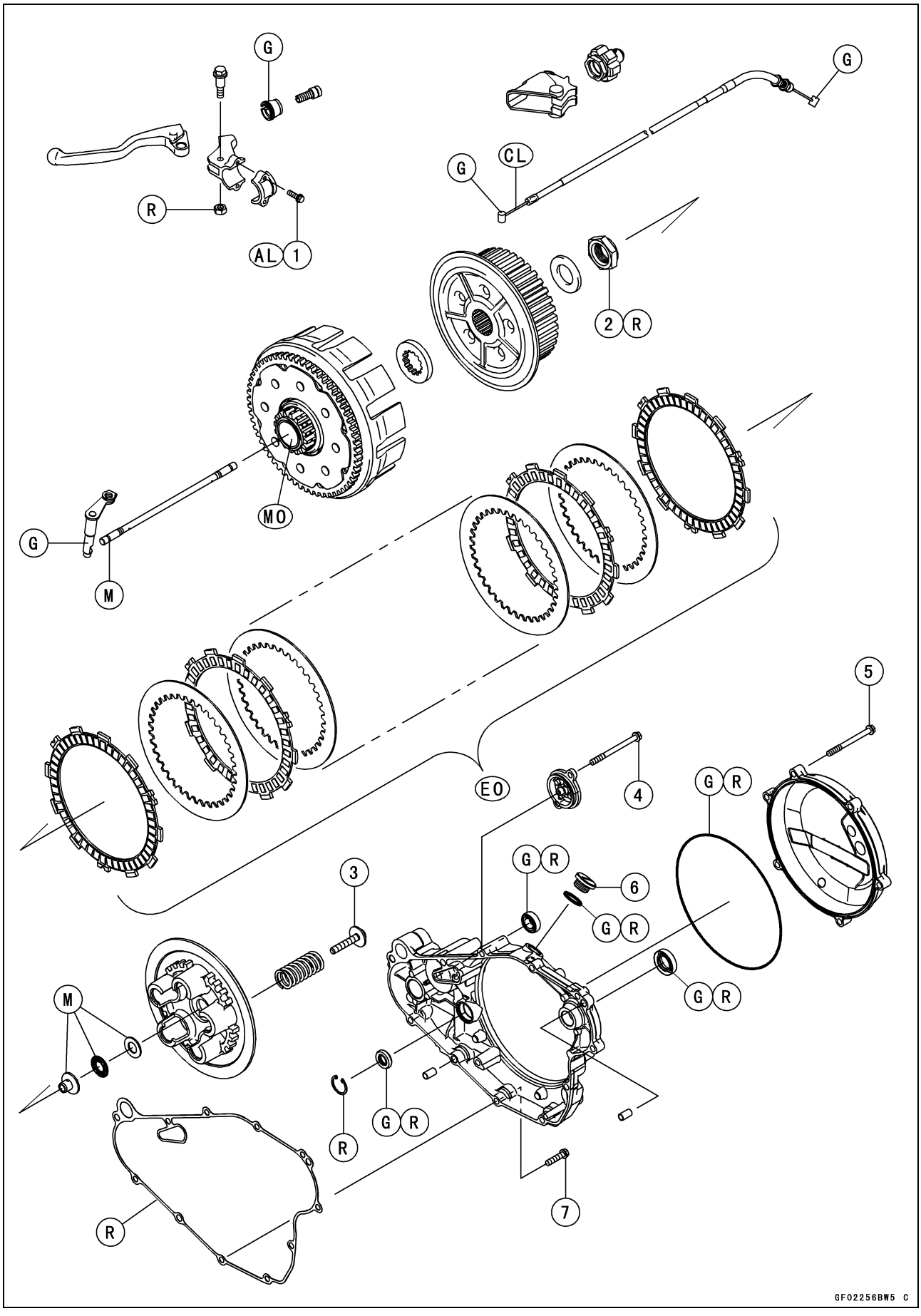

Exploded View

No.	Fastener	Torque			Remarks
		N·m	kgf·m	ft·lb	
1	Clutch Lever Clamp Bolts	4.0	0.41	35 in·lb	AL
2	Clutch Hub Nut	100	10.2	73.8	R
3	Clutch Spring Bolts	9.0	0.92	80 in·lb	
4	Oil Filter Cap Bolts	12	1.2	106 in·lb	
5	Clutch Cover Bolts	12	1.2	106 in·lb	
6	Oil Filler Plug	3.5	0.36	31 in·lb	
7	Right Engine Cover Bolts	12	1.2	106 in·lb	

AL: Tighten the two clamp bolts alternately two times to ensure even tightening torque.
CL: Apply cable lubricant.
EO: Apply engine oil.
G: Apply grease.
M: Apply molybdenum disulfide grease.
MO: Apply molybdenum disulfide oil solution.
(mixture of the engine oil and molybdenum disulfide grease in a weight ratio 10:1)
R: Replacement Parts

Specifications

Item	Standard	Service Limit
Clutch Lever		
Clutch Lever Free Play	8 ~ 13 mm (0.3 ~ 0.5 in.)	– – –
Clutch		
Friction Plate Thickness	2.92 ~ 3.08 mm (0.115 ~ 0.121 in.)	2.7 mm (0.11 in.)
Friction Plate Warp	0.15 mm (0.0059 in.) or less	0.3 mm (0.012 in.)
Steel Plate Warp	0.20 mm (0.0079 in.) or less	0.3 mm (0.012 in.)
Clutch Spring Free Length	46.04 mm (1.813 in.)	43.9 mm (1.73 in.)
Friction Plate/Clutch Housing Clearance	0.20 ~ 0.60 mm (0.008 ~ 0.024 in.)	0.8 mm (0.03 in.)

Special Tools

Inside Circlip Pliers:
57001-143

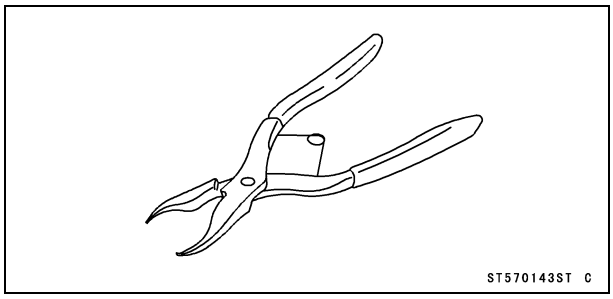

Bearing Driver Set:
57001-1129

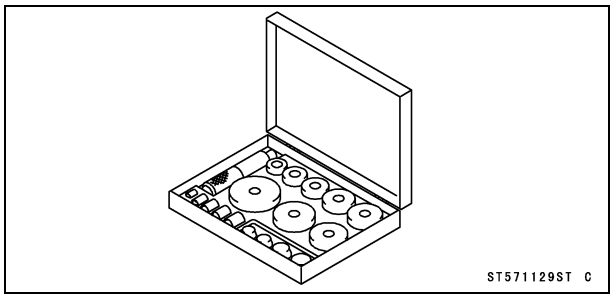

Clutch Holder:
57001-1243

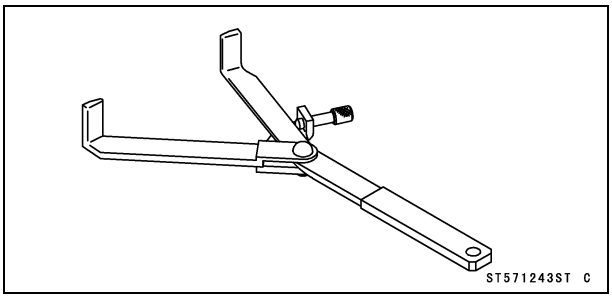

Clutch Lever and Cable

Due to friction plate wear and clutch cable stretch over a long period of use, the clutch must be adjusted in accordance with the Periodic Maintenance Chart.

⚠ WARNING

The engine and exhaust system get extremely hot during normal operation and can cause serious burns. Never touch the engine or exhaust pipe during clutch adjustment.

Clutch Lever (Clutch Cable) Free Play Inspection

- Refer to the Clutch Operation Inspection in the Periodic Maintenance chapter.

Clutch Lever (Clutch Cable) Free Play Adjustment

- Refer to the Clutch Operation Inspection in the Periodic Maintenance chapter.

Clutch Lever Installation

- Install the clutch lever assembly [A] position as shown in the figure.
  25 ~ 35° [B]
  Horizontal Line of Frame [C]
  143 ~ 153 mm (5.63 ~ 6.02 in.) [D]

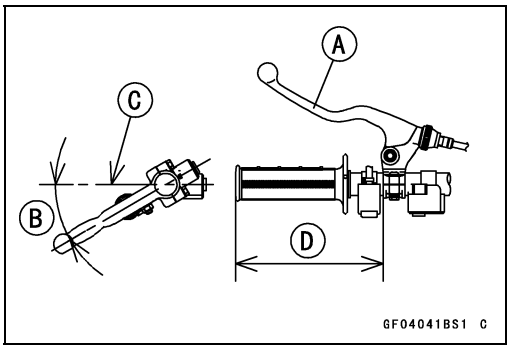

Clutch Cable Removal

- Remove:
  Number Plate (see Number Plate Removal in the Frame chapter)
  Left Radiator Shroud (see Radiator Shroud Removal in the Frame chapter)
  Left Radiator Screen (see Radiator Removal in the Cooling System chapter)
- Loosen the adjusting nuts [A] fully.

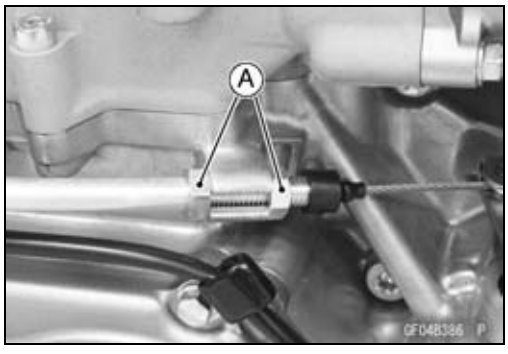

- Slide the adjuster cover [A] and the dust cover [B] out of place.

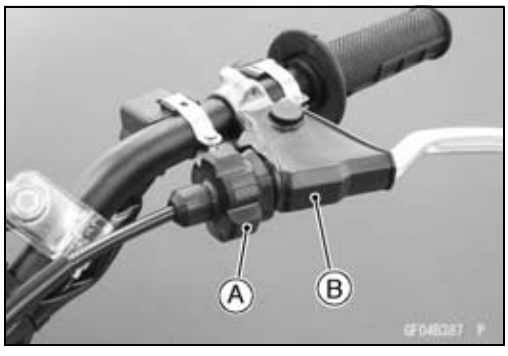

Clutch Lever and Cable

- Loosen the adjusting nut fully and align the slit [A] of the adjusting nut to the slit [B] of the clutch lever.
- Free the clutch cable upper end from the clutch lever.

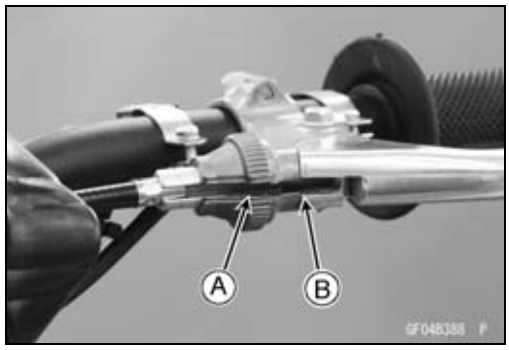

- Free the clutch cable lower end [A] from the clutch release lever [B].

NOTICE
Do not remove the clutch release shaft unless it is absolutely necessary. If removed, release shaft oil seal must be replaced with a new one.

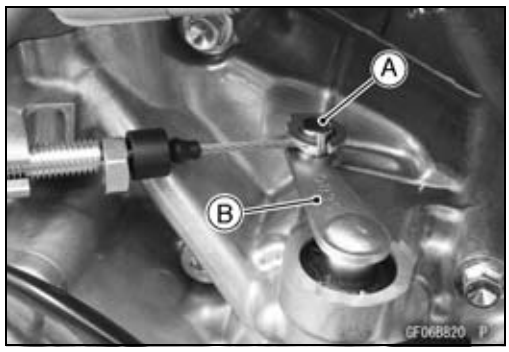

- Open the clamps [A].
- Pull the clutch cable out of the frame.

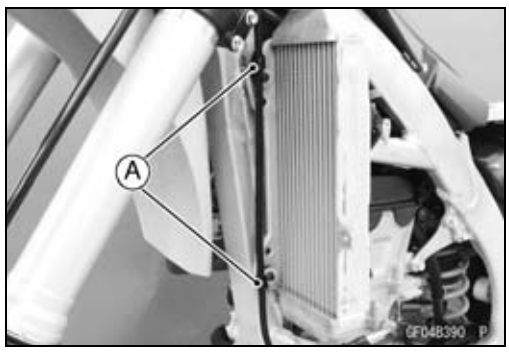

Clutch Cable Installation

- When installing the adjusting nut, apply grease to the lips [A] of adjusting nut.

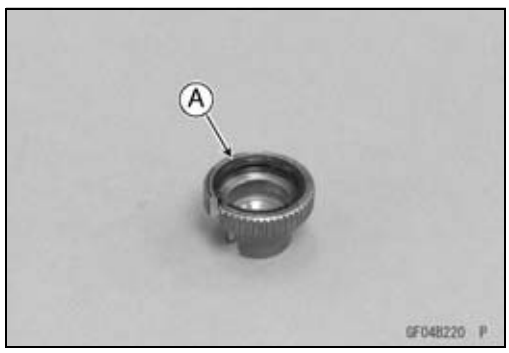

- Install the clutch cable with the threads width as shown.
  0 mm (0 in.) [A]
- Run the clutch cable correctly (see Cable, Wire, and Hose Routing section in the Appendix chapter).
- Adjust the clutch cable (see Clutch Lever Free Play Adjustment in the Periodic Maintenance chapter).
- Install the removed parts (see appropriate chapters).

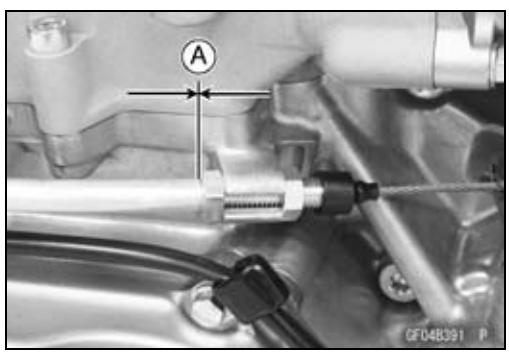

Clutch Lever and Cable

Clutch Cable Inspection and Lubrication

- During a periodic inspection or when the cable has been removed, inspect and lubricate the cable (see General Lubrication and Cable Inspection section in the Periodic Maintenance chapter).

Clutch Cover and Right Engine Cover

Clutch Cover Removal

- Drain the engine oil (see Engine Oil Change in the Periodic Maintenance chapter).
- Remove:
  Brake Pedal Bolt [A] and Washer
  Brake Pedal Return Spring [B]
  Brake Pedal [C]

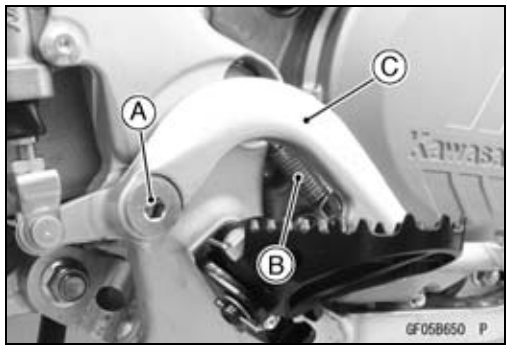

- Remove:
  Clutch Cover Bolts [A]
  Clutch Cover [B]

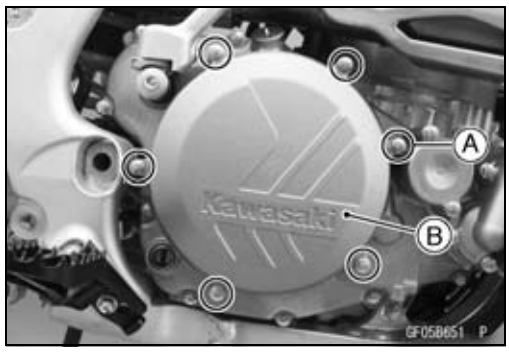

Clutch Cover Installation

- Replace the O-ring [A] of clutch cover with a new one.
- Apply grease to the O-ring, and install it.

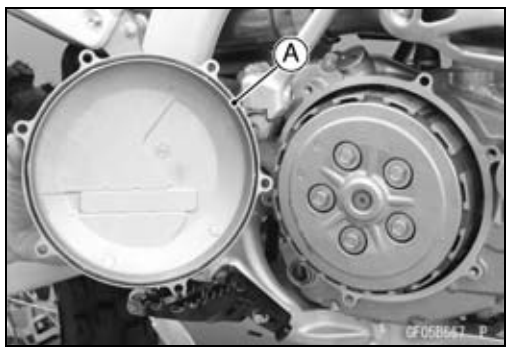

- Install the clutch cover.
- Tighten:

  Torque - Clutch Cover Bolts: 12 N·m (1.2 kgf·m, 106 in·lb)

  L = 60 mm (2.4 in.) [A]
  L = 25 mm (0.98 in.) [B]
- Install the brake pedal (see Brake Pedal Installation in the Brakes chapter).
- Pour the engine oil (see Engine Oil Change in the Periodic Maintenance chapter).
- Check the rear brake effectiveness (see Brakes section in the Periodic Maintenance chapter).

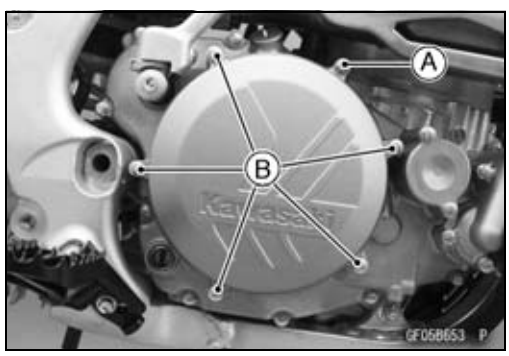

Right Engine Cover Removal

- Drain:
  Engine Oil (see Engine Oil Change in the Periodic Maintenance chapter)
  Coolant (see Coolant Draining in the Cooling System chapter)

Clutch Cover and Right Engine Cover

- Remove:
  Right Engine Guard (see Engine Guard Removal in the Frame chapter)
  Kick Pedal (see Kick Pedal Removal in the Crankshaft/Transmission chapter)
  Brake Pedal Bolt [A] and Washer
  Brake Pedal Return Spring [B]
  Brake Pedal [C]

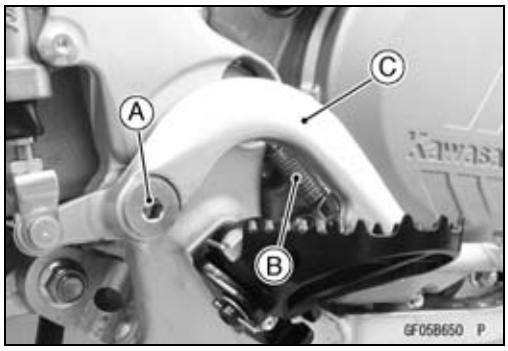

- Remove:
  Water Pump Cover (see Water Pump Cover Removal in the Cooling System chapter)
  Clutch Cover Bolt [A]
  Oil Filter Cap Bolt [B]
  Right Engine Cover Bolts [C]
  Right Engine Cover [D]

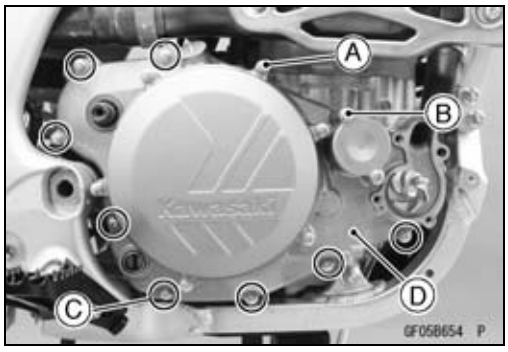

Right Engine Cover Installation

- Install the dowel pins [A].
- Replace the O-ring [B] with a new one.
- Apply grease to the O-ring and install it to the crankcase.

○Install the O-ring so that the tapered side facing outside.

- Replace the right engine cover gasket [C] with a new one.
- Wrap the spline [D] of the kick shaft with the vinyl tape to prevent damage.
- Apply a grease to the kick shaft oil seal lip.

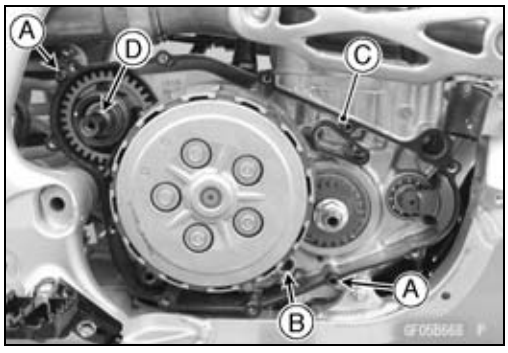

- When installing the cover does not go well, the cover is installed according to the following procedures.

○Install the cover while turning the impeller [A] for engaging the water pump shaft to the balancer shaft.

- Tighten:

Torque - Right Engine Cover Bolts: 12 N·m (1.2 kgf·m, 106 in·lb)
Clutch Cover Bolt: 12 N·m (1.2 kgf·m, 106 in·lb)
Oil Filter Cap Bolt: 12 N·m (1.2 kgf·m, 106 in·lb)

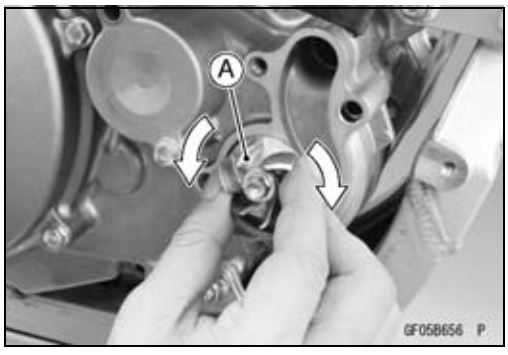

- Remove the vinyl tape from the kick shaft.
- Install:
  Water Pump Cover (see Water Pump Cover Installation in the Cooling System chapter)
  Brake Pedal (see Brake Pedal Installation in the Brakes chapter)
  Kick Pedal (see Kick Pedal Installation in the Crankshaft/Transmission chapter)
  Right Engine Guard (see Engine Guard Installation in the Frame chapter)

Clutch Cover and Right Engine Cover

- Pour:
  Engine Oil (see Engine Oil Change in the Periodic Maintenance chapter)
  Coolant (see Coolant Filling in the Cooling System chapter)
- Check the rear brake effectiveness (see Brakes section in the Periodic Maintenance chapter).

Right Engine Cover Assembly

- Refer to the Oil Seal and Bearing Installation in the Cooling System chapter for water pump oil seals and bearings installation.
- Replace the removed oil seal and circlip with new ones.
- Press the crankshaft oil seal [A] until it bottomed as shown.

  Special Tool - Bearing Driver Set: 57001-1129

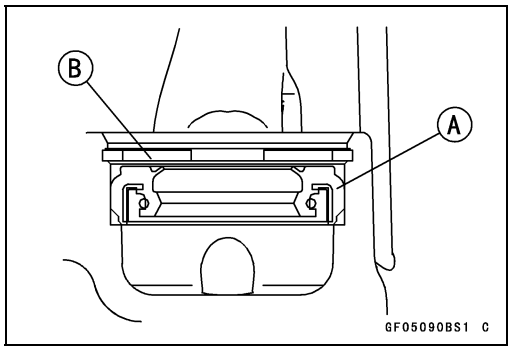

- Install the circlip [B].

  Special Tool - Inside Circlip Pliers: 57001-143

- Press the kick shaft oil seal [A] so that the bearing surface flush with the right engine cover surface [B].

  Special Tool - Bearing Driver Set: 57001-1129

- Apply grease to the oil seal lips.

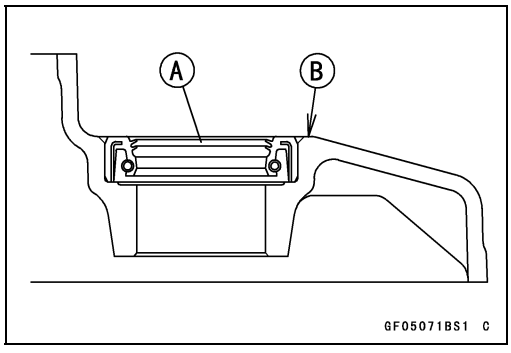

Clutch

Clutch Removal

- Drain the engine oil (see Engine Oil Change in the Periodic Maintenance chapter).
- Remove:
  Clutch Cover (see Clutch Cover Removal)
  Clutch Spring Bolts [A]
  Clutch Springs
  Clutch Spring Plate [B]

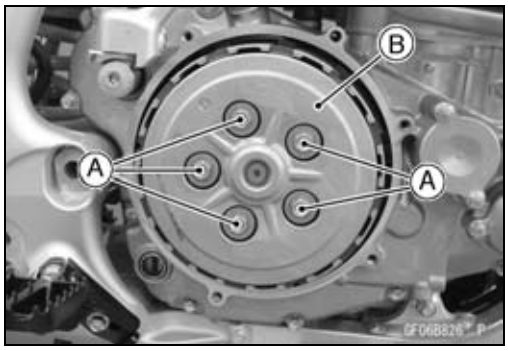

- Remove:
  Washer [A]
  Needle Bearing [B]
  Push Rod Holder [C]
  Push Rod [D]

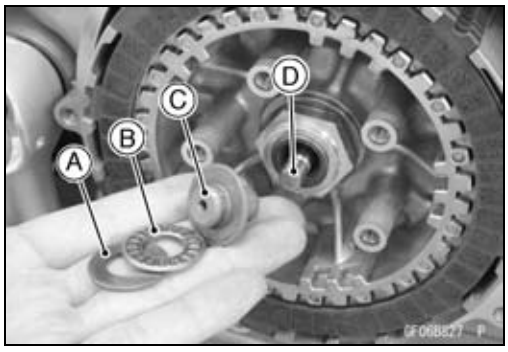

- Remove:
  Friction Plates [A]
  Steel Plates [B]

NOTE

○ *There are 2 different friction plates installed in the clutch plate assembly.*

○ *When servicing the clutch, use a permanent marker to identify each friction plate before removing them so that they can be reinstalled in the correct positions.*

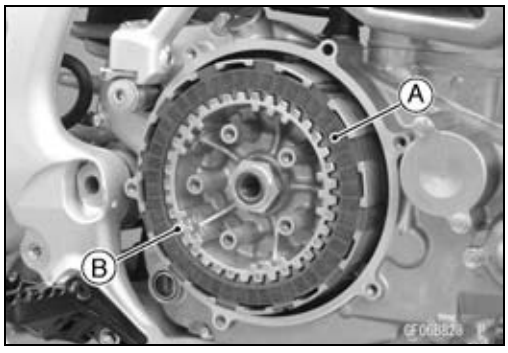

- Hold the clutch hub [A] with the clutch holder [B].

  Special Tool - Clutch Holder: 57001-1243
- Remove the clutch hub nut [C].

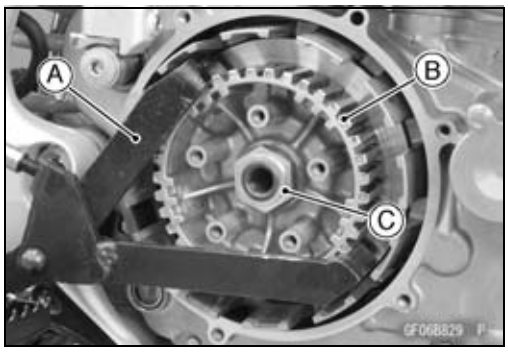

- Remove:
  Washer [A]
  Clutch Hub [B]

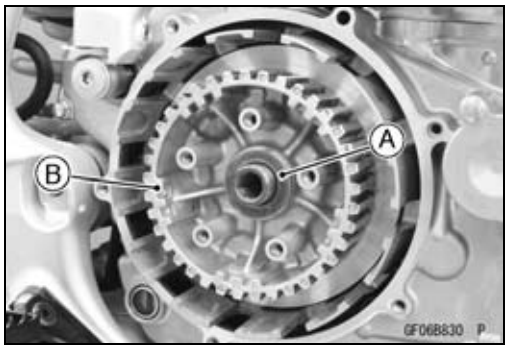

Clutch

- Remove:
  Toothed Washer [A]
  Clutch Housing [B]

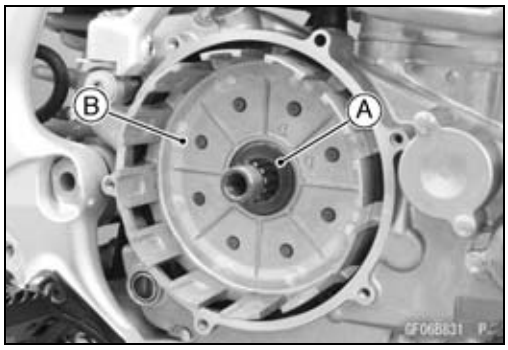

Clutch Installation

- Check the clutch plate assembly free play (see Clutch Plate Assembly Free Play Inspection/Adjustment).
- Apply molybdenum disulfide oil to the sliding area [A] of the shaft.

- Install:
  Clutch Housing [A]
  Toothed Washer [B]

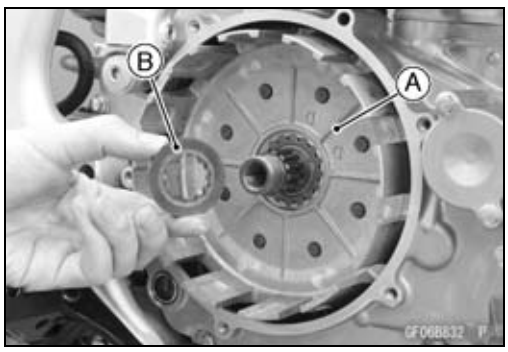

- Install the clutch hub [A].
- Install the washer [B] so that the “OUT SIDE” mark [C] faces outward.

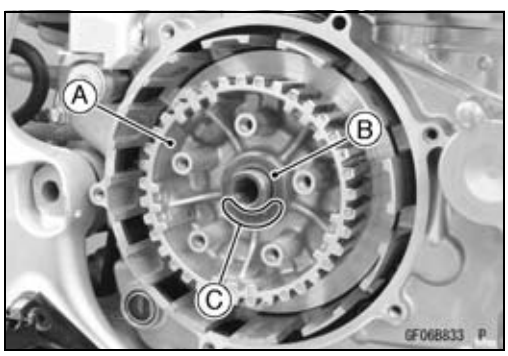

- Replace the clutch hub nut [A] with a new one.
- Hold the clutch hub [B] with the clutch holder [C], and tighten the clutch hub nut.

  Special Tool - Clutch Holder: 57001-1243

  Torque - Clutch Hub Nut: 100 N·m (10.2 kgf·m, 73.8 ft·lb)

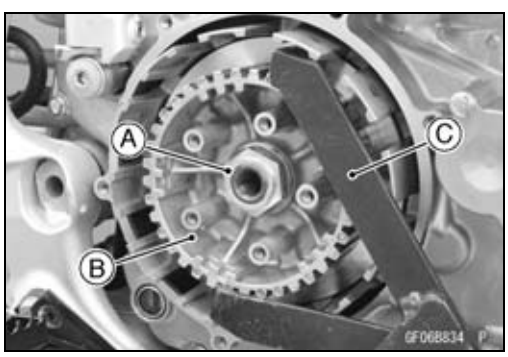

Clutch

- Install the friction plates and steel plates, starting with a friction plate and alternating them. Finishing with a friction plate [A].

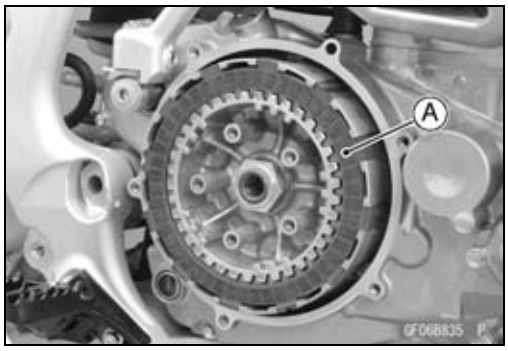

NOTE

○*There are 2 different friction plates installed in the clutch plate assembly.*

○*When servicing the clutch, use a permanent marker to identify each friction plate before removing them so that they can be reinstalled in the correct positions.*

NOTICE

If new dry steel plates and friction plates are installed, apply engine oil to the surfaces of each plate to avoid clutch plate seizure.

- Apply molybdenum disulfide grease to the push rod end [A] sliding portion [B] of the push rod holder.

NOTE

○*Do not close the oil passage hole on the push rod holder with the molybdenum disulfide grease.*

- Install the push rod and push rod holder.
- Apply molybdenum disulfide grease to the needle bearing [C] and washer [D], and install them.

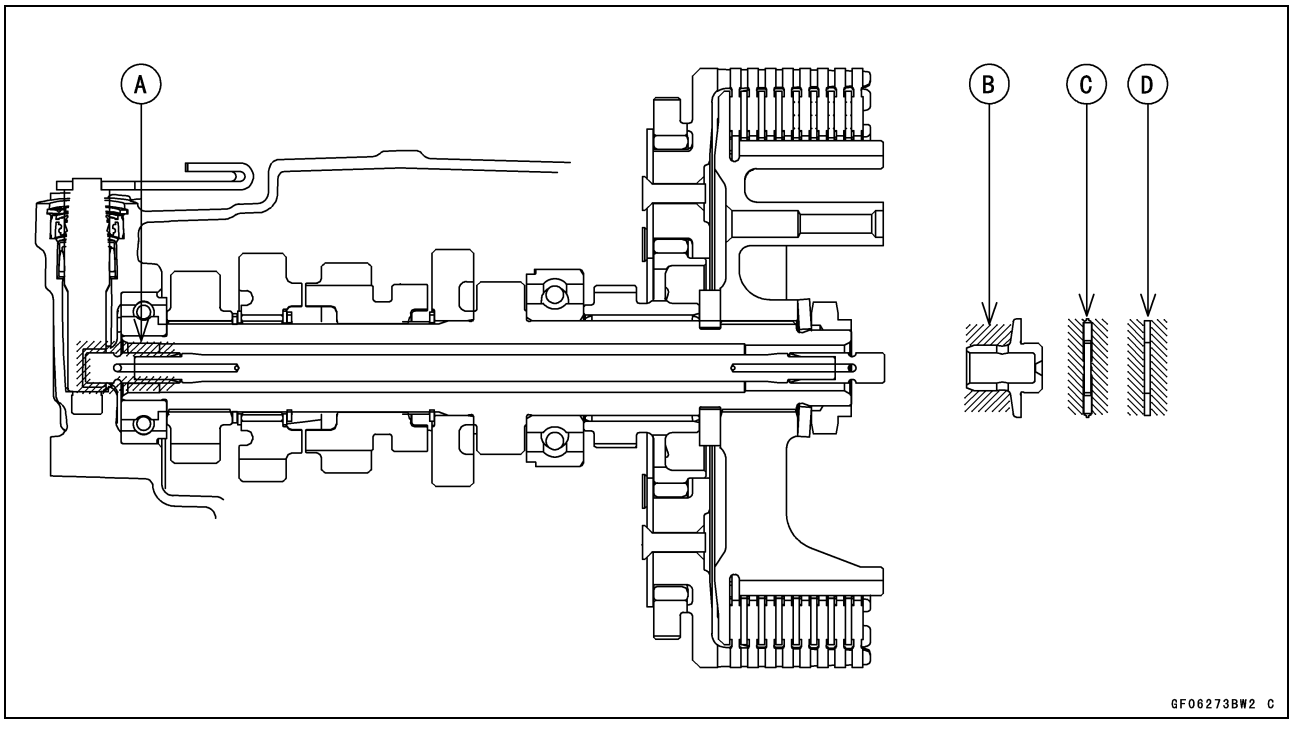

Clutch

- Install the clutch spring plate [A] and clutch springs.
- Tighten:

  Torque - Clutch Spring Bolts [B]: 9.0 N·m (0.92 kgf·m, 80 in·lb)
- Install the clutch cover (see Clutch Cover Installation).

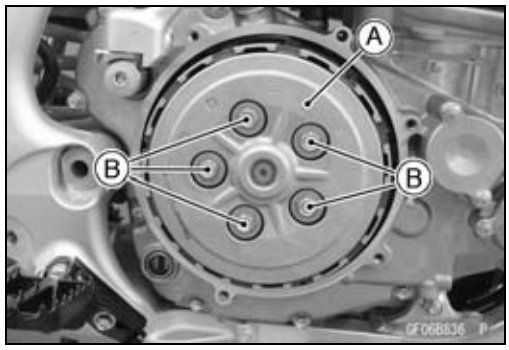

- Check the release shaft lever position.
- Pushing [A] the release shaft lever [B] lightly forward, measure the distance [C] between the release shaft lever and bracket [D].

  Release Shaft Lever Position
  Standard: 69.9 ~ 77.7 mm (2.75 ~ 3.06 in.)

★If the lever position is not within the standard, select the correct thickness of adjusting washer(s) according to the tables shown.

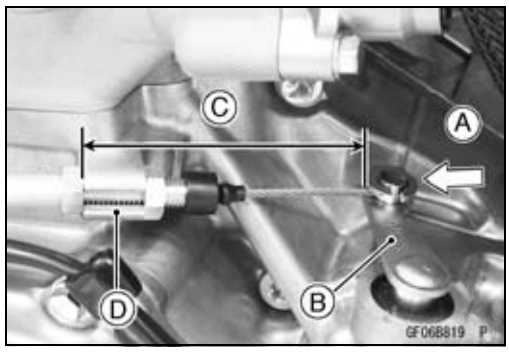

Adjusting Washers

Thickness	Part Number
1.5 mm (0.06 in.)	92200-1548
1.0 mm (0.04 in.)	92200-0045

Release Shaft Lever Position and Adjusting Washer [A] Selection

Position Distance	Judgment	Washers Thickness	Qty
69.9 ~ 77.7 mm (2.75 ~ 3.06 in.)	Standard	1.5 mm (0.06 in.)	1
More than 77.7 mm (3.06 in.)	Too big	1.0 mm (0.04 in.)	1
Less than 69.9 mm (2.75 in.)	Too small	1.0 mm (0.04 in.)	2

★If the replacement of the adjusting washer is necessary, remove the clutch spring plate again and install the selected washer.

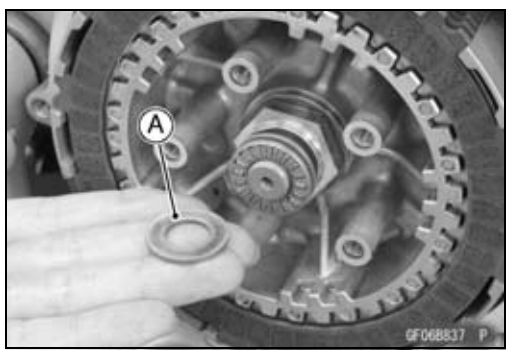

Clutch

Clutch Plate Assembly Free Play Inspection/Adjustment

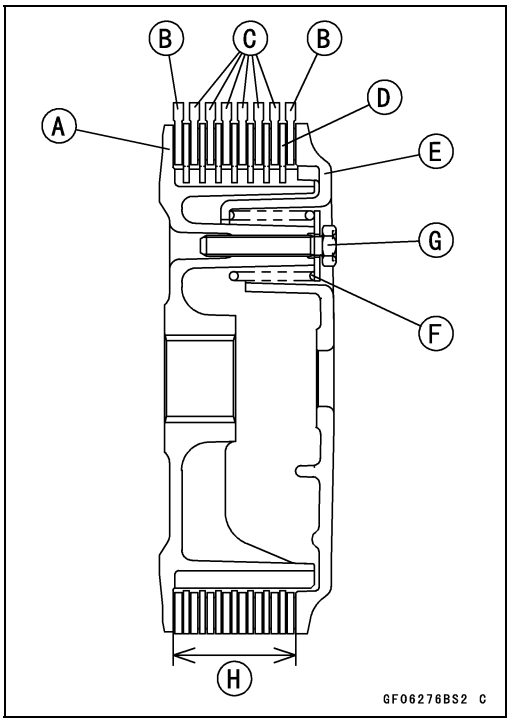

- Assemble the following parts.
  Clutch Hub [A]
  Friction Plates [B, C]
  Steel Plates [D]
  Spring Plate [E]
  Spring [F]
  Bolts [G]

NOTE

○*There are 2 different friction plates installed in the clutch plate assembly.*
○*When servicing the clutch, use a permanent marker to identify each friction plate before removing them so that they can be reinstalled in the correct positions.*

- Tighten:

Torque - Clutch Spring Bolts: 9.0 N·m (0.92 kgf·m, 80 in·lb)

- Measure the clutch plate assembly length [H].

Clutch Plate Assembly Length
Standard: 34.9 ~ 35.5 mm (1.37 ~ 1.40 in.)

★If length is not within the standard, select the correct length of steel plates according to the table shown.

Thickness	Part Number
1.2 mm (0.047 in.)	13089-1010
1.6 mm (0.063 in.) (STD)	13089-1095
2.0 mm (0.079 in.)	13089-1005

NOTE

○*Do not use the steel plate of 1.2 mm (0.047 in.) and 2.0 mm (0.079 in.) thickness at the same time.*

Release Shaft Removal

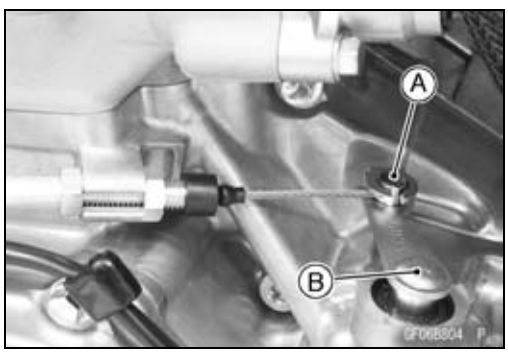

NOTICE

Do not remove the clutch release shaft unless it is absolutely necessary. If removed, release shaft oil seal must be replaced with a new one.

- Remove:
  Clutch (see Clutch Removal)
- Remove the tip [A] of the clutch cable (see Clutch Cable Removal).
- Pull out the release shaft assembly [B].

Clutch

Release Shaft Installation

- Apply engine oil to the needle bearings in the hole of the crankcase.
- Apply grease to the release shaft lower end [A] and oil seal lips.
- Insert the release shaft straight into the hole of the crankcase.

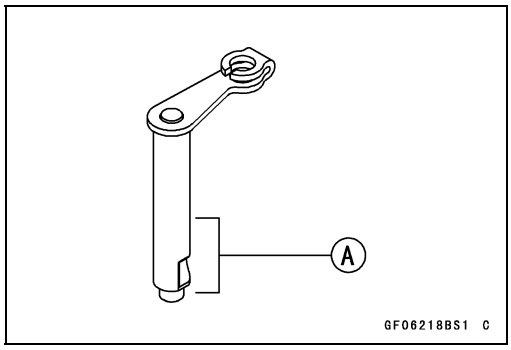

NOTICE
When inserting the release shaft, be careful not to remove the spring of the oil seal.

- Install the removed parts (see appropriate chapters).

Clutch Plates Wear, Damage Inspection

- Refer to the Clutch Plates Inspection in the Periodic Maintenance chapter.

Clutch Plates Warp Inspection

- Refer to the Clutch Plates Inspection in the Periodic Maintenance chapter.

Clutch Spring Free Length Inspection

- Measure the free length [A] of the clutch springs.

★If any clutch spring is shorter than the service limit, it must be replaced.

Clutch Spring Free Length

Standard:	**46.04 mm (1.813 in.)**
Service Limit:	**43.9 mm (1.73 in.)**

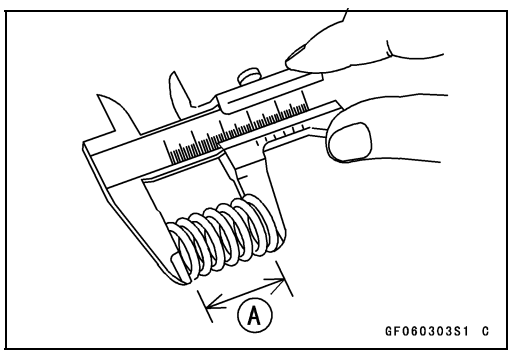

Clutch Housing Finger Damage Inspection

- Visually inspect the clutch housing fingers [A] that come in contact with the friction plate tangs.

★If they are damaged or if there are groove cuts in the areas that come in contact with the tangs, replace the housing. Replace the friction plates if their tangs are damaged as well.

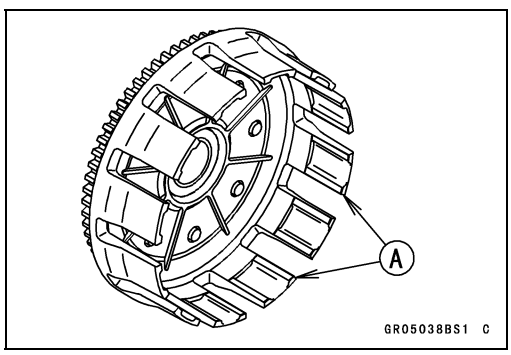

Friction Plate/Clutch Housing Clearance Inspection

- Measure the clearance [A] between the tangs [B] on the friction plate and the fingers [C] of the clutch housing.

★If this clearance is excessive, the clutch will be noisy and will not be able to engage.

★If the clearance exceeds the service limit, replace the friction plates.

Friction Plate/Clutch Housing Clearance

Standard:	**0.20 ~ 0.60 mm (0.008 ~ 0.024 in.)**
Service Limit:	**0.8 mm (0.03 in.)**

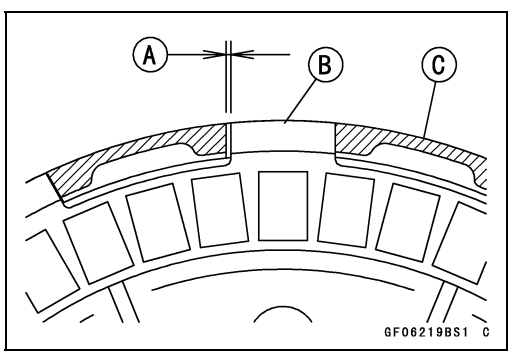

Clutch

Clutch Hub Spline Damage Inspection

- Visually inspect the areas of the clutch hub splines that come in contact with the teeth of the steel plates.

★If there are notches worn into the clutch hub splines [A], replace the clutch hub. Replace the steel plates if their teeth are damaged as well.

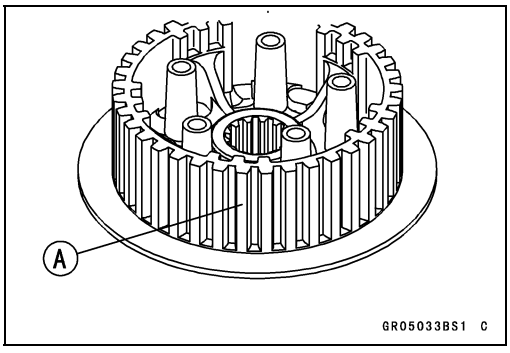

Engine Lubrication System

Table of Contents

Exploded View 7-2
Lubrication System Chart 7-4
Specifications 7-6
Special Tools 7-7
Engine Oil and Oil Filter 7-8
- Engine Oil Level Inspection 7-8
- Engine Oil Change 7-8
- Oil Filter Replacement 7-9
- Oil Screen (Scavenge) Removal 7-9
- Oil Screen (Scavenge) Installation 7-9
- Oil Screen (Feed) Removal 7-9
- Oil Screen (Feed) Installation 7-9
- Oil Screen Cleaning 7-10

Oil Pump 7-11
- Oil Pump Removal 7-11
- Oil Pump Installation 7-12
- Oil Pump Inspection 7-13

Oil Pressure 7-14
- Oil Pressure Measurement 7-14

Exploded View

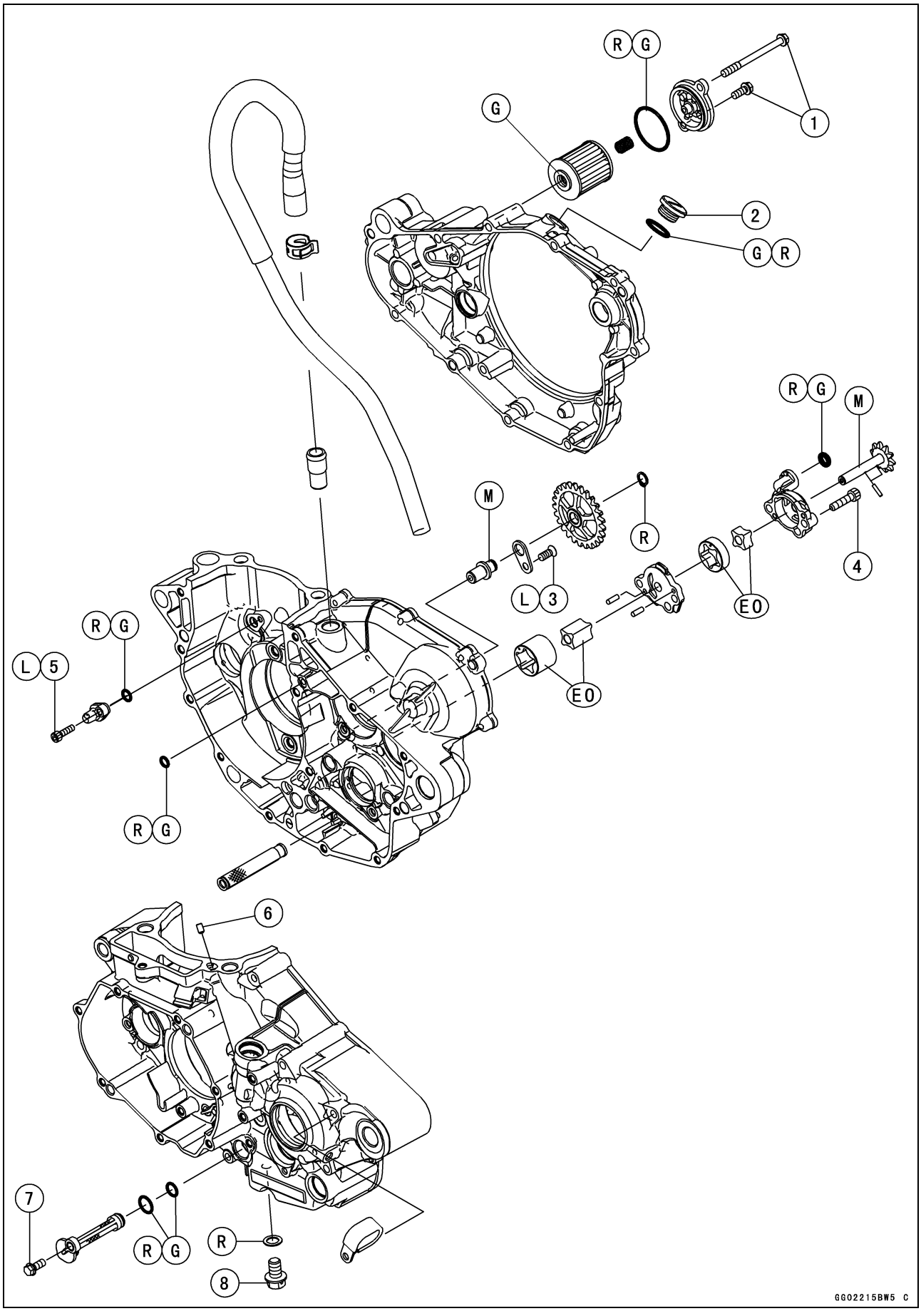

Exploded View

No.	Fastener	Torque			Remarks
		N·m	kgf·m	ft·lb	
1	Oil Filter Cap Bolts	12	1.2	106 in·lb	
2	Oil Filler Plug	3.5	0.36	31 in·lb	
3	Oil Pump Idle Gear Shaft Retainer Screw	6.0	0.61	53 in·lb	L
4	Oil Pump Bolts	10	1.0	89 in·lb	
5	Piston Oil Nozzle Bolt	7.0	0.71	62 in·lb	L
6	Nozzle	3.0	0.31	27 in·lb	
7	Oil Screen Bolt	10	1.0	89 in·lb	
8	Engine Oil Drain Bolt	20	2.0	15	

EO: Apply engine oil.
G: Apply grease.
L: Apply a non-permanent locking agent.
M: Apply molybdenum disulfide grease.
R: Replacement Parts

Lubrication System Chart

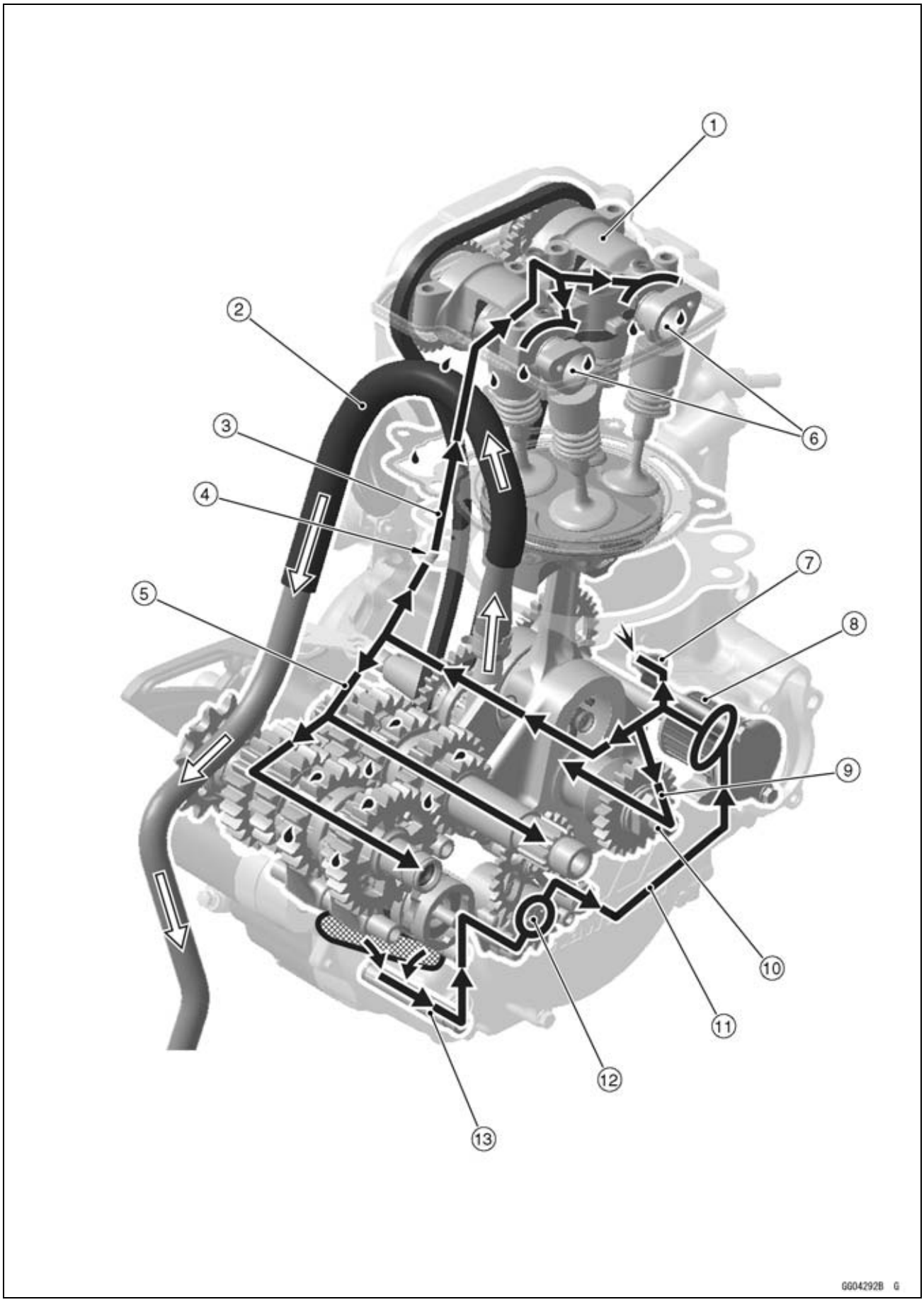

Lubrication System Chart

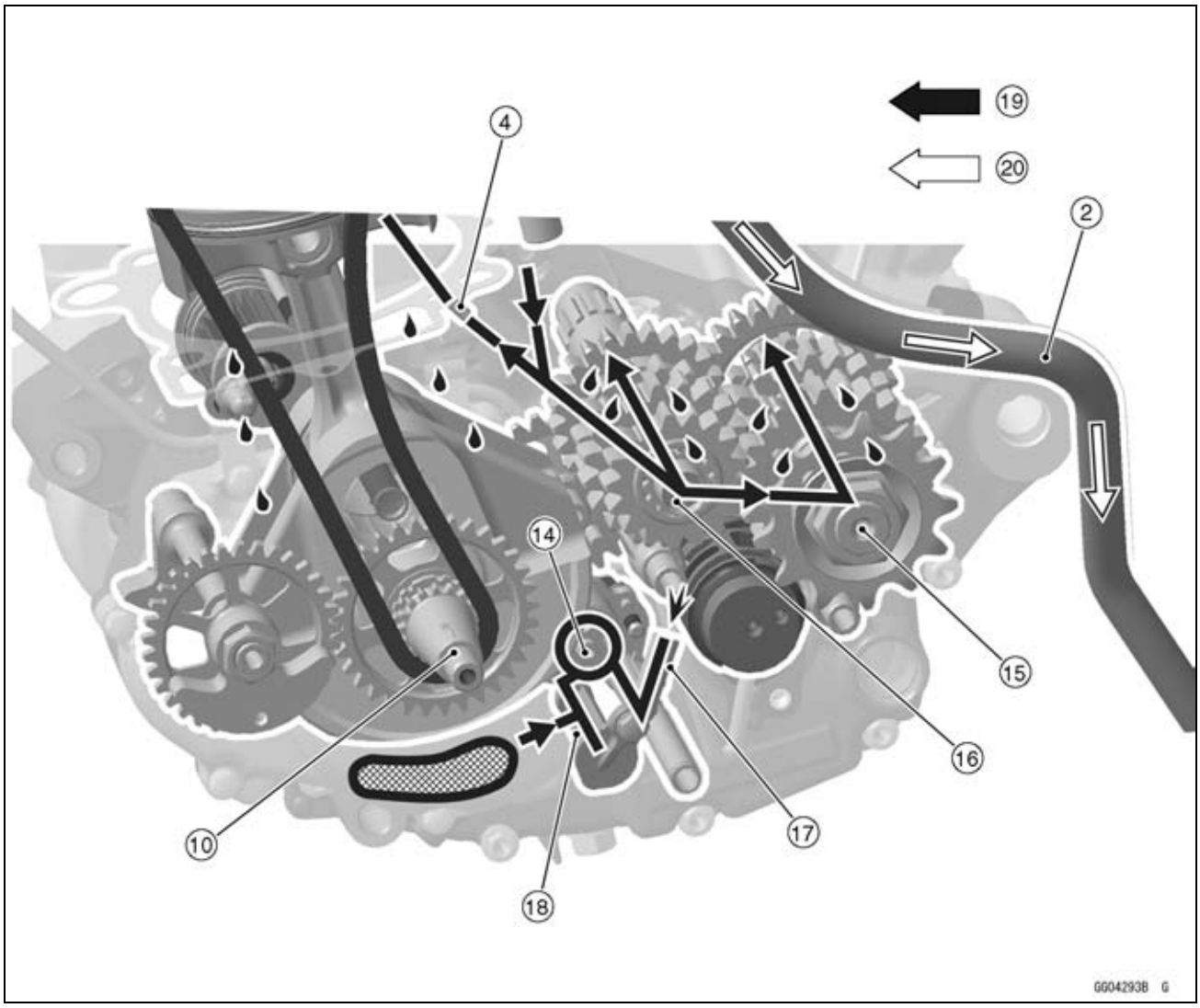

1. Camshaft Cap
2. Breather Hose
3. Cylinder Oil Passage (from Crankcase Oil Passage to Cylinder Head Oil Passage)
4. Oil Nozzle
5. Left Crankcase Oil Passage (from Oil Filter to Transmission Oil Passage)
6. Camshafts
7. Piston Oil Nozzle
8. Oil Filter
9. Right Engine Cover Oil Passage (from Oil Filter to Crankshaft)
10. Crankshaft
11. Right Engine Cover Oil Passage (from Feed Oil Pump to Oil Filter)
12. Oil Pump (Feed)
13. Oil Screen (Feed)
14. Oil Pump (Scavenge)
15. Output Shaft
16. Drive Shaft
17. Transmission Oil Nozzle
18. Oil Screen (Scavenge)
19. Engine Oil
20. Blowby Gas

Specifications

Item	Standard
Engine Oil	
Type	Castrol “POWER1 Racing 4T” 5W-40 or API SG, SH, SJ, SL or SM with JASO MA, MA1 or MA2
Viscosity	SAE 10W-30, 10W-40, or 10W-50
Capacity	0.8 L (0.8 US qt) (when filter is not removed) 0.9 L (1.0 US qt) (when filter is removed) 1.0 L (1.1 US qt) (when engine is completely dry)
Oil Level	Between upper and lower level lines (after warm-up or driving)
Oil Pressure Measurement	
Oil Pressure	20 ~ 70 kPa (0.20 ~ 0.71 kgf/cm², 2.9 ~ 10 psi) @4 000 r/min (rpm), Oil Temperature 100°C (212°F)

Special Tools

Oil Pressure Gauge, 5 kgf/cm²:
57001-125

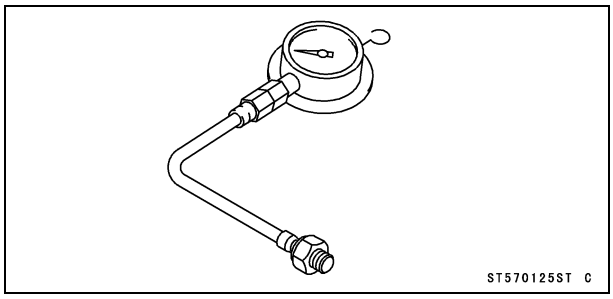

Oil Pressure Gauge Adapter, M6 × 1.0:
57001-1088

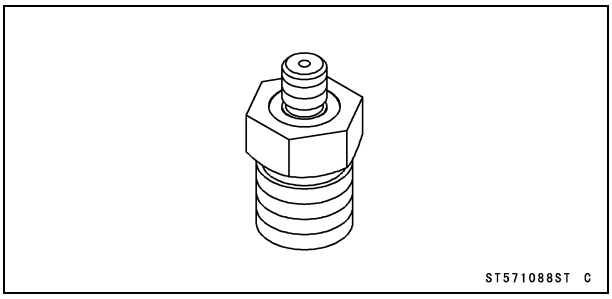

Outside Circlip Pliers:
57001-144

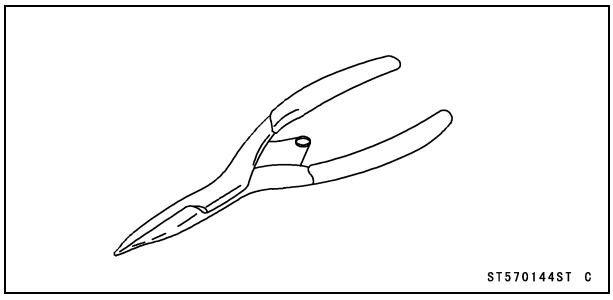

Oil Pressure Cap:
57001-1848

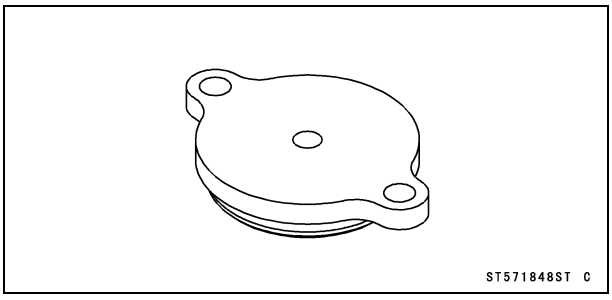

Engine Oil and Oil Filter

⚠ WARNING

Vehicle operation with insufficient, deteriorated, or contaminated engine oil will cause accelerated wear and may result in engine seizure, accident, and injury. Check the oil level before each use and change the oil and filter according to the periodic maintenance chart.

The engine oil level indicated in the oil inspection window gauge is very sensitive to the motorcycle's position and engine rpm at time of shut down. Because of the semi-dry sump lubrication system with separate oil chambers in the crank room and transmission room, under certain conditions oil can accumulate in the crank room and give a false low reading at the oil level inspection window, which indicates oil volume in the transmission room.

Engine Oil Level Inspection

- Situate the motorcycle so that it is vertical.
- Check that the engine oil level is between the upper [A] and lower [B] levels in the oil level inspection window.

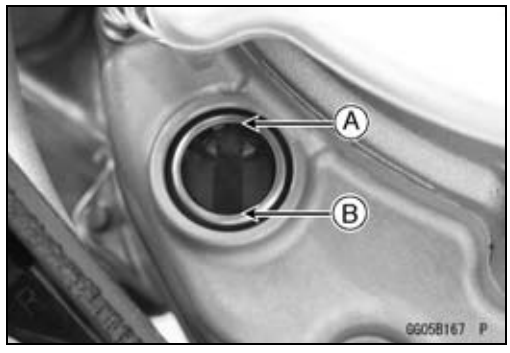

NOTE

○*If the motorcycle has just been used, wait several minutes for all the oil to drain down.*

○*If no oil appears in the oil level inspection window, tip the motorcycle slightly to the right until oil is visible then return to an upright position. If no oil appears even when tipped at an extreme angle, remove the drain bolt to empty any oil, reinstall the drain bolt and refill with the specified amount of oil.*

○*If the oil has just been changed, start the engine and run it for several minutes* ***at idle speed****. This fills the oil filter with oil.*

○***Do not run the engine at high engine speed.*** *Stop the engine, then wait several minutes until the oil settles.*

NOTICE

Racing the engine before the oil reaches every part can cause engine seizure.

★If the oil level is too high, remove the excess oil through the filler opening, using a syringe or some other suitable device.

★If the oil level is too low, add the correct amount of oil through the oil filler opening. Use the same type and make of oil that is already in the engine.

NOTE

○*If the engine oil type and make are unknown, use any brand of the specified oil to top off the level rather than running the engine with the oil level low. Then at your earliest convenience, change the oil completely.*

Engine Oil Change

- Refer to the Engine Oil Change in the Periodic Maintenance chapter.

Engine Oil and Oil Filter

Oil Filter Replacement

- Refer to the Oil Filter Replacement in the Periodic Maintenance chapter.

Oil Screen (Scavenge) Removal

- Remove:
  Oil Screen Bolt [A]
  Oil Screen [B]

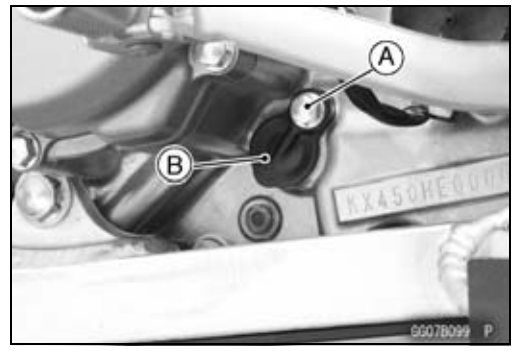

Oil Screen (Scavenge) Installation

- Replace the O-rings [A] with new ones.
- Apply grease to the O-rings.
- Install the oil screen.
- Tighten:

Torque - Oil Screen Bolt: 10 N·m (1.0 kgf·m, 89 in·lb)

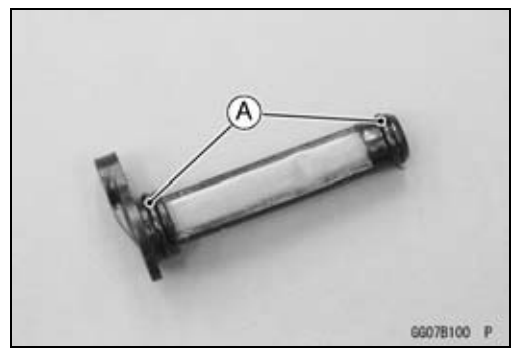

Oil Screen (Feed) Removal

- Split the crankcase (see Crankcase Disassembly in the Crankshaft/Transmission chapter).
- Remove oil screen [A] from the left crankcase.

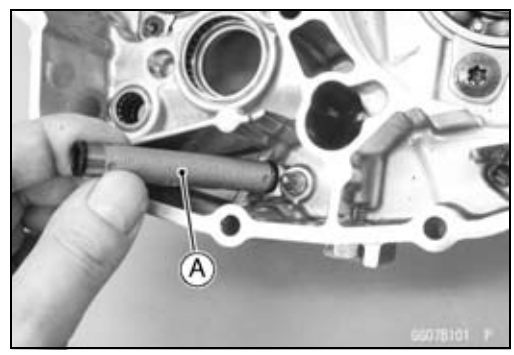

Oil Screen (Feed) Installation

- Install the oil screen [A] to the guides [B] on the right crankcase so that the non-mesh area [C] faces to the right crankcase side.
- Install the removed parts (see appropriate chapters).

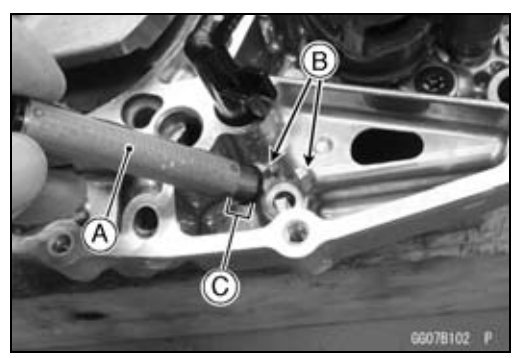

Engine Oil and Oil Filter

Oil Screen Cleaning

- Remove the oil screens (see Oil Screen (Scavenge/Feed) Removal).
- Clean the oil screen with a high flash-point solvent and remove any particles stuck to them.

⚠ WARNING

Gasoline and low flash-point solvents can be flammable and/or explosive and cause severe burns. Clean the screen in a well-ventilated area, and take care that there are no sparks or flame anywhere near the working area; this includes any appliance with a pilot light. Do not use gasoline or a low flash-point solvent to clean the screen.

NOTE

○*While cleaning the screen, check for any metal particles that might indicate internal engine damage.*

- Check the screen carefully for any damage.
  Oil Screen (Scavenge) [A]
  Oil Screen (Feed) [B]

★If the screen is damaged, replace it with a new one.

- Install the oil screens (see Oil Screen (Scavenge/Feed) Installation).

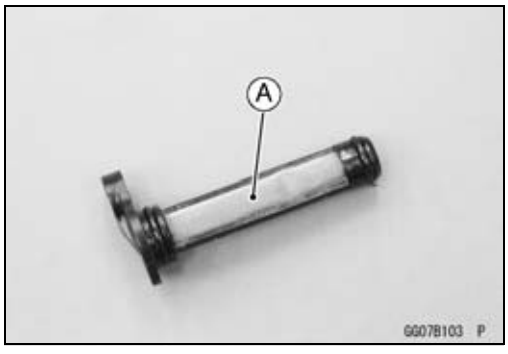

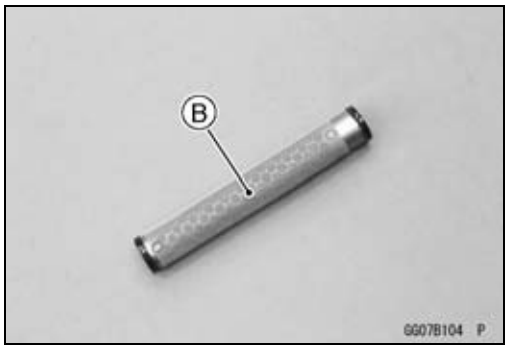

Oil Pump

Oil Pump Removal

- Remove:
  Clutch (see Clutch Removal in the Clutch chapter)
  Circlip [A]
  Oil Pump Idle Gear [B]

Special Tool - Outside Circlip Pliers: 57001-144

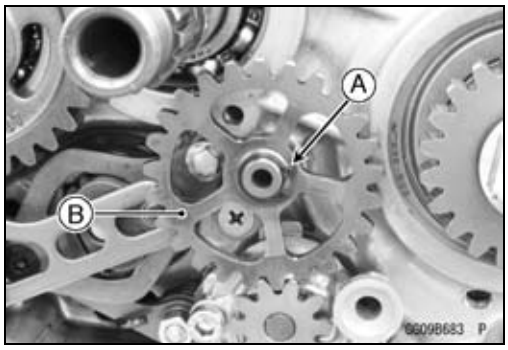

- Remove the oil pump bolts [A].

- Remove the oil pump assembly [A].
- Remove the outer rotor (scavenge) [B].

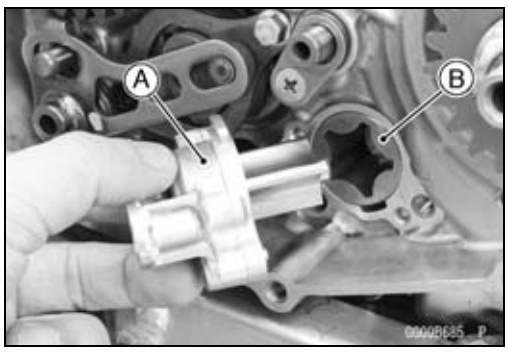

- Remove:
  Inner Rotor (Scavenge) [A]
  Pin [B]
  Spacer [C]

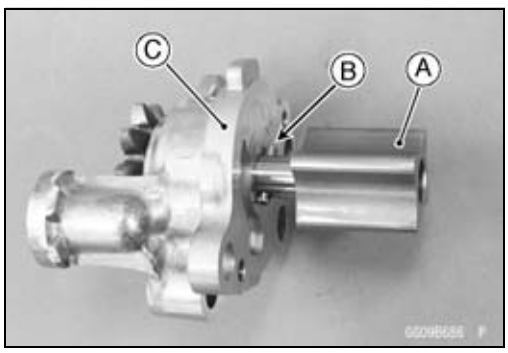

- Remove:
  Inner Rotor (Feed) [A]
  Outer Rotor (Feed) [B]

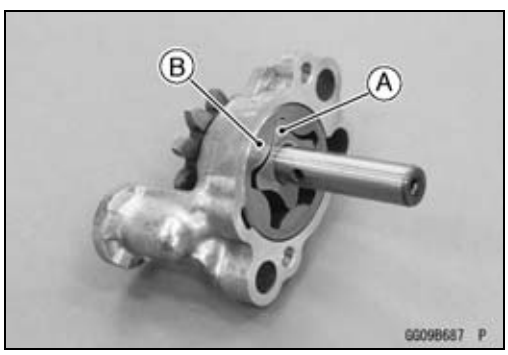

Oil Pump

- Remove:
  Pin [A]
  Oil Pump Shaft [B]

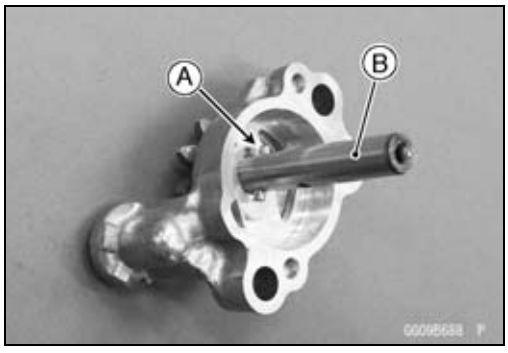

Oil Pump Installation

- Apply molybdenum disulfide grease [A] to the oil pump shaft [B] as shown.
- Install the oil pump shaft to the oil pump housing [C].
- Install the pin [D] to the oil pump shaft.
- Apply engine oil to the each oil pump rotor.
- Install the inner rotor (feed) [E] so that the grooves [F] fit the pin.
- Install outer rotor (feed) [G] so that the hole mark [H] faces to the pump housing side.
- Install the spacer [I].
- Install the pin [J] to the oil pump shaft.

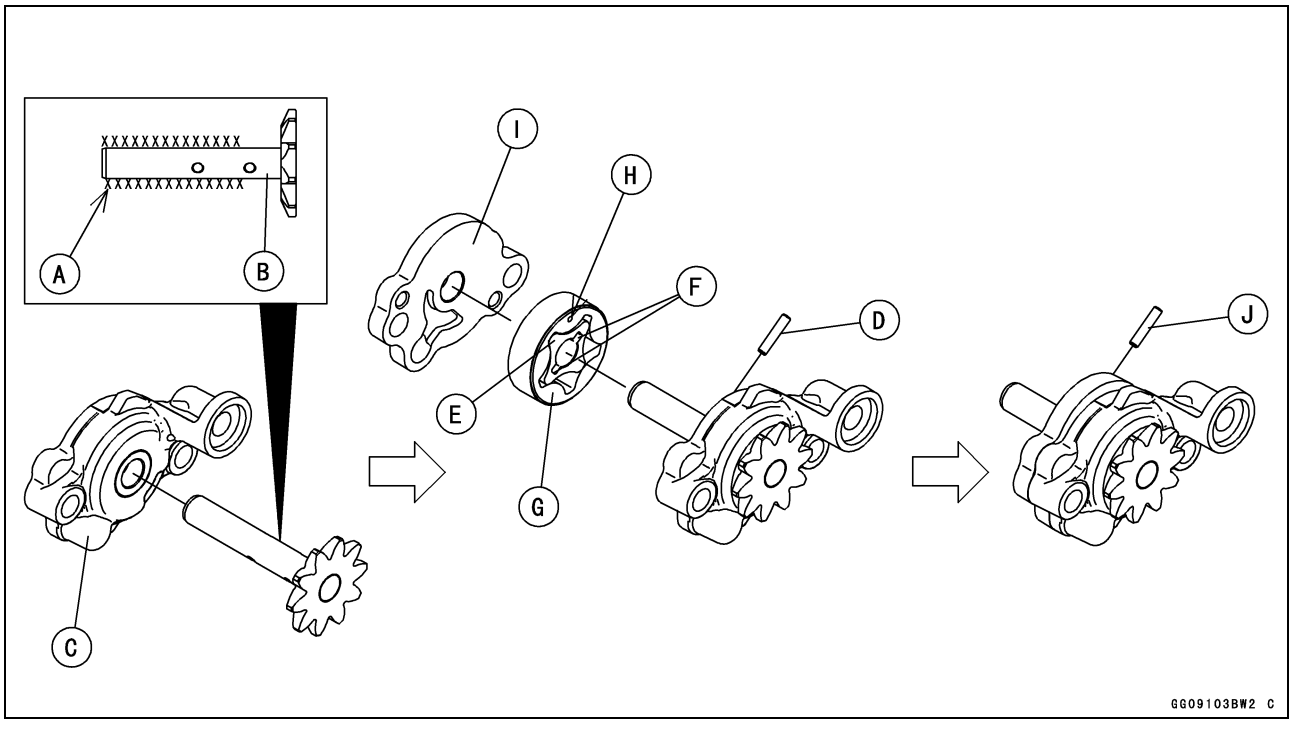

Oil Pump

- Apply engine oil to the each oil pump rotor.
- Install the inner rotor (scavenge) [A] so that the grooves [B] fit the pin.
- Install outer rotor (scavenge) [C] so that the hole mark [D] faces to the pump housing side.
- Install the dowel pins [E] to the crankcase.
- Install the oil pump assembly [F].
- Tighten:

  Torque - Oil Pump Bolts [G]: 10 N·m (1.0 kgf·m, 89 in·lb)

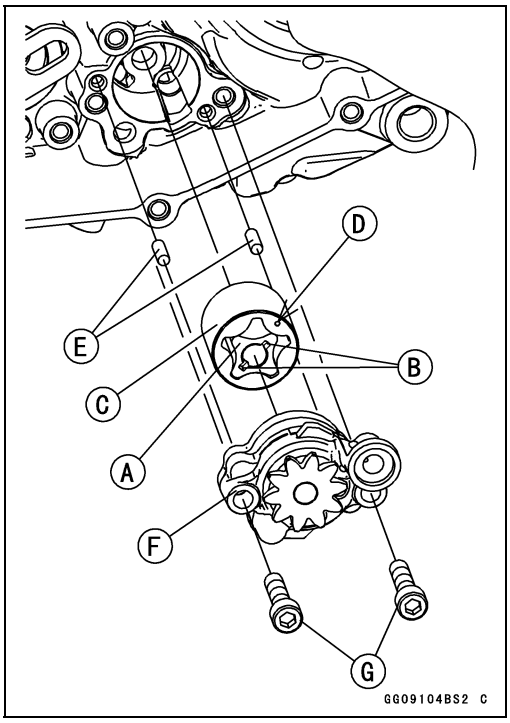

- Apply molybdenum disulfide grease to the shaft of the oil pump idle gear.
- Install the oil pump idle gear [A].
- Replace the circlip [B] with a new one, and install it.

  Special Tool - Outside Circlip Pliers: 57001-144

- Install the removed parts (see appropriate chapters).

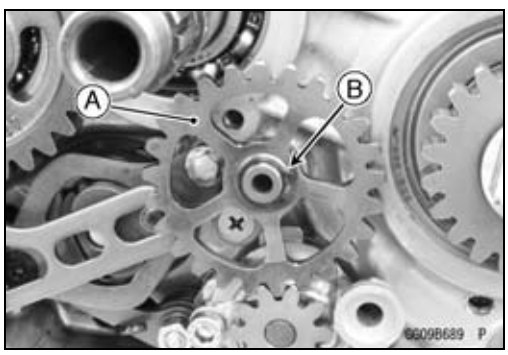

Oil Pump Inspection

- Remove the oil pump (see Oil Pump Removal).
- Visually inspect the oil pump housing, outer rotors and the inner rotors.

★If the oil pump is any damaged or unevenly worn, replace the rotors, pump housing or crankcase.

Oil Pressure

Oil Pressure Measurement

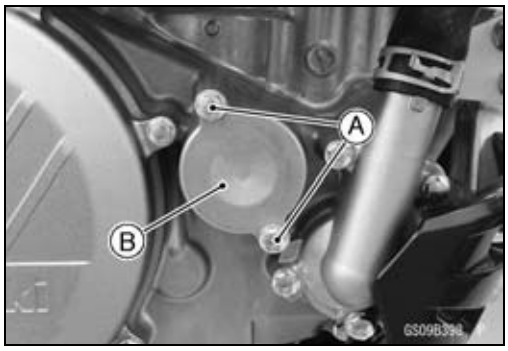

- Remove:
  Oil Filter Cap Bolts [A]
  Oil Filter Cap [B]

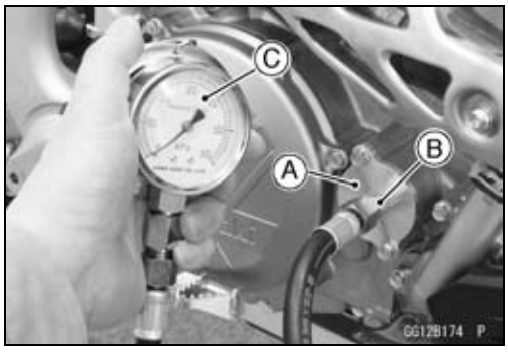

- Install the new O-ring to the oil pressure cap [A].

  Special Tool - Oil Pressure Cap: 57001-1848
- Install the oil pressure cap, and tighten the oil filter cap bolts.

  Torque - Oil Filter Cap Bolts: 12 N·m (1.2 kgf·m, 106 in·lb)
- Attach the oil pressure gauge adapter [B] and oil pressure gauge [C].

  Special Tools - Oil Pressure Gauge, 5 kgf/cm²: 57001-125
  Oil Pressure Gauge Adapter, M6 × 1.0: 57001-1088
- Start the engine.

NOTE

○*Warm up the engine thoroughly before measuring the oil pressure.*

- Run the engine at the specified speed, and read the oil pressure gauge.

  Oil Pressure
  Standard: 20 ~ 70 kPa (0.20 ~ 0.71 kgf/cm², 2.9 ~ 10 psi) @4 000 r/min (rpm), Oil Temperature 100°C (212°F)

★If the oil pressure is much lower than the standard, check the oil filter first, and oil pump (feed).
★If the reading is much higher than the standard, check the oil passages for dirt or clogging.

⚠ WARNING

Hot oil can cause severe burns. Beware of hot engine oil that will drain through the oil passage when the gauge adapter is removed.

- Stop the engine and remove the oil pressure cap, oil pressure gauge adapter and gauge.
- Replace the O-ring with a new one.
- Apply grease to the O-ring, and install the O-ring to the oil filter cap.
- Install the oil filter cap.
- Tighten:

  Torque - Oil Filter Cap Bolts: 12 N·m (1.2 kgf·m, 106 in·lb)

Engine Removal/Installation

Table of Contents

Exploded View 8-2
Special Tools 8-4
Engine Removal/Installation 8-5
Engine Removal 8-5
Engine Installation 8-7

Exploded View

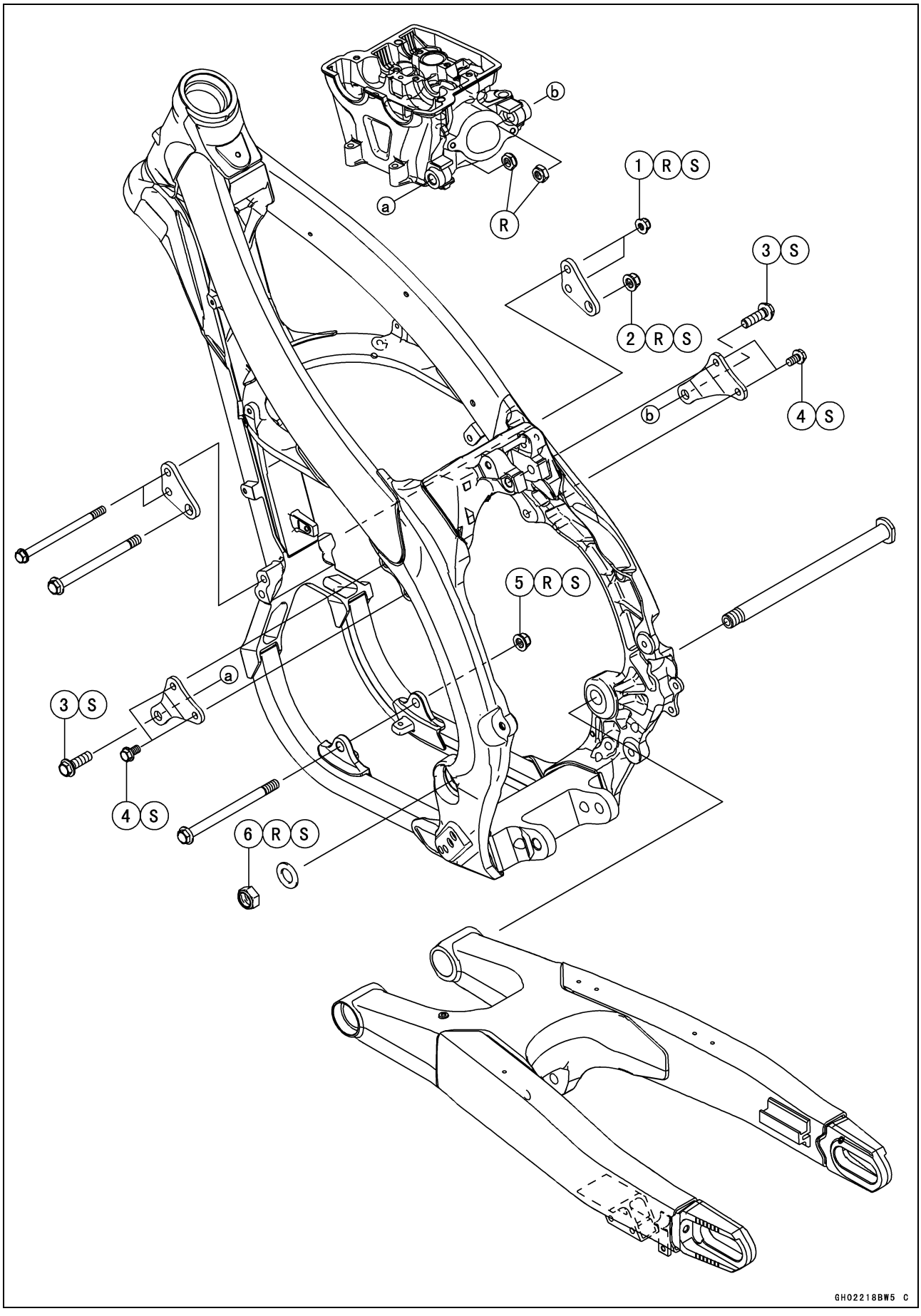

Exploded View

No.	Fastener	Torque			Remarks
		N·m	kgf·m	ft·lb	
1	Middle Engine Bracket Nuts	30	3.1	22	R, S
2	Middle Engine Mounting Nut	50	5.1	37	R, S
3	Upper Engine Mounting Bolts	50	5.1	37	S
4	Upper Engine Bracket Bolts	30	3.1	22	S
5	Lower Engine Mounting Nut	50	5.1	37	R, S
6	Swingarm Pivot Shaft Nut	100	10.2	73.8	R, S

R: Replacement Parts
S: Follow the specified tightening sequence.

Special Tools

Jack:
57001-1238

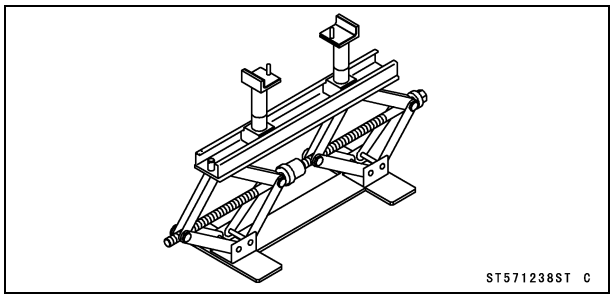

Jack Attachment:
57001-1608

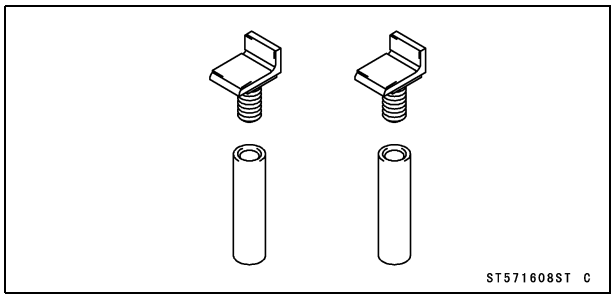

Engine Removal/Installation

Engine Removal

- Place the jack under the frame to support the motorcycle.

Special Tools - Jack: 57001-1238
Jack Attachment: 57001-1608

⚠ WARNING

When the swingarm pivot shaft is removed the swingarm and rear wheel assembly will become detached and allow the frame to fall to the floor, creating the potential for injury. Removing the engine requires the swingarm pivot to be removed, so support the bottom of the frame with a jack or other appropriate stand.

- Squeeze the brake lever slowly and hold it with a band [A].

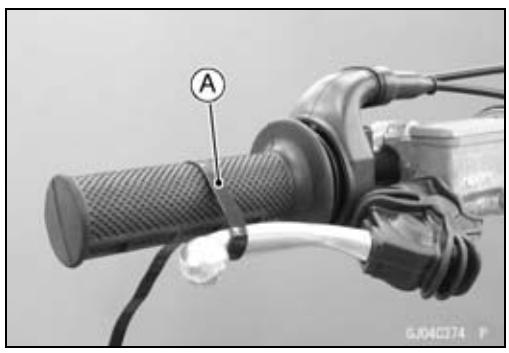

⚠ WARNING

Motorcycle may fall over unexpectedly resulting in an accident or injury. Be sure to hold the front brake when removing the engine.

NOTICE

Be sure to hold the front brake when removing the engine, or the motorcycle may fall over. The engine or the motorcycle could be damaged.

- Drain:
  Engine Oil (see Engine Oil Change in the Periodic Maintenance chapter)
  Coolant (see Coolant Draining in the Cooling System chapter)

- Remove:
  Rear Frame (see Rear Frame Removal in the Frame chapter)
  Exhaust Pipe (see Exhaust Pipe Removal in the Engine Top End chapter)
  Fuel Tank (see Fuel Tank Removal in the Fuel System (DFI) chapter)
  Throttle Body Assy (see Throttle Body Assy Removal in the Fuel System (DFI) chapter)
  Shift Pedal (see External Shift Mechanism Removal in the Crankshaft/Transmission chapter)
  Engine Sprocket (see Engine Sprocket Removal in the Final Drive chapter)
  Right Engine Guard (see Engine Guard Removal in the Frame chapter)
  Clutch Cable Lower End (see Clutch Cable Removal in the Clutch chapter)
  Brake Pedal Bolt and Return Spring (see Brake Pedal Removal in the Brakes chapter)
  Spark Plug Cap (see Spark Plug Cleaning and Inspection in the Periodic Maintenance chapter)

Engine Removal/Installation

● Disconnect:
Water Temperature Sensor Connector (see Water Temperature Sensor Removal/Installation in the Fuel System (DFI) chapter)
Gear Position Switch Lead Connector [A]
Magneto Lead Connector [B]

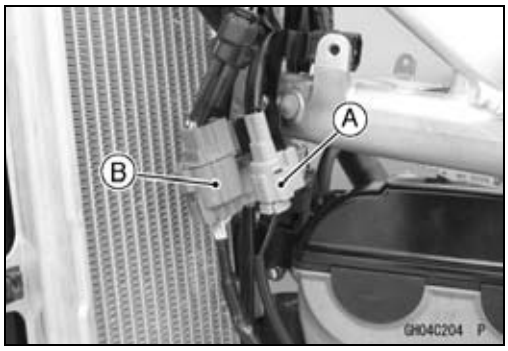

● Remove:
Water Hoses [A]

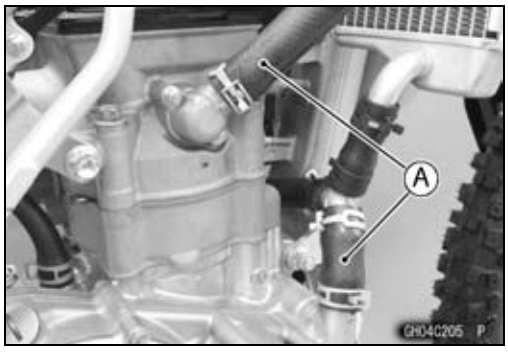

● Remove (Both Sides):
Upper Engine Mounting Bolt [A] and Nut
Upper Engine Bracket Bolts [B]
Upper Engine Bracket [C]

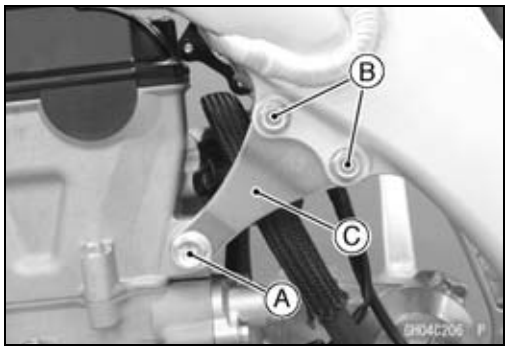

● Remove:
Middle Engine Bracket Bolts [A] and Nuts
Middle Engine Mounting Bolt [B] and Nut
Middle Engine Bracket [C] (Both Sides)
Lower Engine Mounting Bolt [D] and Nut

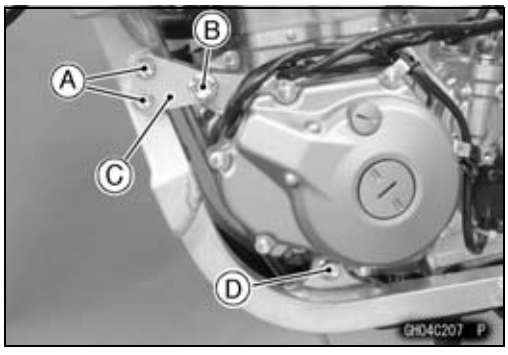

● Remove:
Swingarm Pivot Shaft Nut [A] and Washer
Swingarm Pivot Shaft

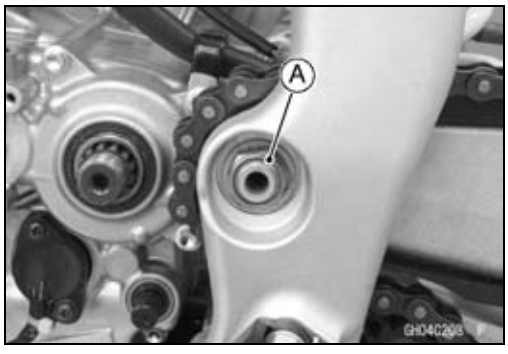

● Remove the engine from the motorcycle to right side.
○Clear the engine rear portion from the swingarm and then remove the engine.

Engine Removal/Installation

Engine Installation

● Replace the following parts with new ones.
  Upper Engine Mounting Nuts
  Middle Engine Mounting Nut
  Middle Engine Bracket Nuts
  Lower Engine Mounting Nut
  Swingarm Pivot Shaft Nut
● Install the engine.
○First, insert the front portion of the engine from the right side, and then install the rear portion.
○Second, fit the rear portion of the engine to the swingarm.

● Insert the swingarm pivot shaft from the right side.
● Install all engine brackets, bolts and nuts temporarily.
○Insert the following bolts from left side:
  Middle Engine Mounting Bolt [A]
  Middle Engine Bracket Bolts [B]
  Lower Engine Mounting Bolt [C]

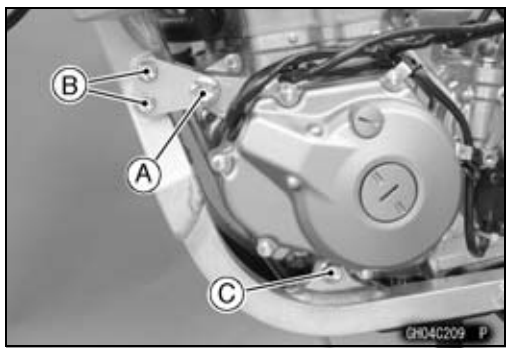

● Install the swingarm pivot shaft nut with the washer.
● Tighten the bolts and nuts in the numbered sequence [1 ~ 6].

Torque - Swingarm Pivot Shaft Nut [1]: 100 N·m (10.2 kgf·m, 73.8 ft·lb)
Lower Engine Mounting Nut [2]: 50 N·m (5.1 kgf·m, 37 ft·lb)
Middle Engine Mounting Nut [3]: 50 N·m (5.1 kgf·m, 37 ft·lb)
Middle Engine Bracket Nuts [4]: 30 N·m (3.1 kgf·m, 22 ft·lb)
Upper Engine Bracket Bolts [5]: 30 N·m (3.1 kgf·m, 22 ft·lb)
Upper Engine Mounting Bolts [6]: 50 N·m (5.1 kgf·m, 37 ft·lb)

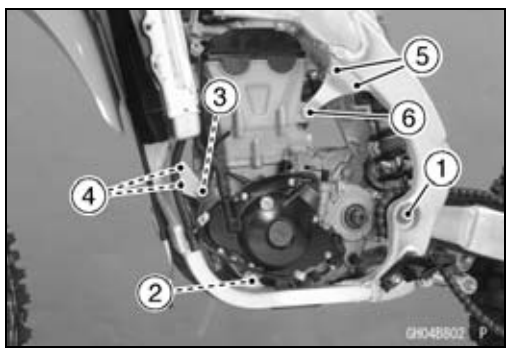

Engine Removal/Installation

- Install the removed parts (see appropriate chapters).
- Run the cables, hoses, and leads according to the Cable, Wire and Hose Routing section in the Appendix chapter.
- Pour:
  Engine Oil (see Engine Oil Change in the Periodic Maintenance chapter)
  Coolant (see Coolant Filling in the Cooling System chapter)
- Adjust:
  Throttle Cables (see Throttle Grip (Throttle Cable) Free Play Adjustment in the Periodic Maintenance chapter)
  Clutch Cable (see Clutch Operation Inspection in the Periodic Maintenance chapter)
  Drive Chain (see Drive Chain Slack Adjustment in the Periodic Maintenance chapter)
  Idle Speed (see Idle Speed Adjustment in the Periodic Maintenance chapter)
- Check the brake effectiveness.

⚠ WARNING

After servicing, it takes several applications of the brake lever before the brake pads contact the disc, which could result in increased stopping distance and cause an accident resulting in injury or death. Do not attempt to ride the motorcycle until a firm brake lever is obtained by pumping the lever until the pads are against the disc.

Crankshaft/Transmission

Table of Contents

Exploded View 9-2
Specifications 9-6
Special Tools and Sealant 9-7
Crankcase 9-8
  Crankcase Disassembly 9-8
  Crankcase Assembly 9-10
Crankshaft 9-19
  Crankshaft Removal 9-19
  Crankshaft Installation 9-19
  Crankshaft Disassembly 9-19
  Crankshaft Assembly 9-19
  Crankshaft Inspection 9-20
  Connecting Rod Bend Inspection 9-21
  Connecting Rod Twist Inspection 9-22
Transmission 9-23
  Transmission Shaft Removal 9-23
  Transmission Shaft Installation 9-23
  Transmission Shaft Disassembly 9-23
  Transmission Shaft Assembly 9-24
  Shift Fork Bending Inspection 9-26
  Shift Fork/Gear Groove Wear Inspection 9-26
  Shift Fork Guide Pin/Shift Drum Groove Wear Inspection 9-26
  Gear Damage Inspection 9-26
Balancer 9-27
  Balancer Removal 9-27
  Balancer Installation 9-27
Primary Gear 9-29
  Primary Gear Removal 9-29
  Primary Gear Installation 9-29
External Shift Mechanism 9-30
  Shift Pedal Removal 9-30
  Shift Pedal Installation 9-30
  External Shift Mechanism Removal 9-30
  External Shift Mechanism Installation 9-31
  External Shift Mechanism Inspection 9-32
Kickstarter 9-34
  Kick Pedal Assy Removal 9-34
  Kick Pedal Assy Installation 9-34
  Kick Pedal Assy Disassembly 9-34
  Kick Pedal Assy Assembly 9-34
  Idle Gear Removal 9-35
  Idle Gear Installation 9-35
  Kickshaft Removal 9-35
  Kickshaft Installation 9-36
  Kick Shaft Assembly Disassembly/Assembly 9-36
Bearings/Oil Seals 9-38
  Bearing Replacement 9-38
  Bearing Wear Inspection 9-38
  Oil Seal Inspection 9-39

Exploded View

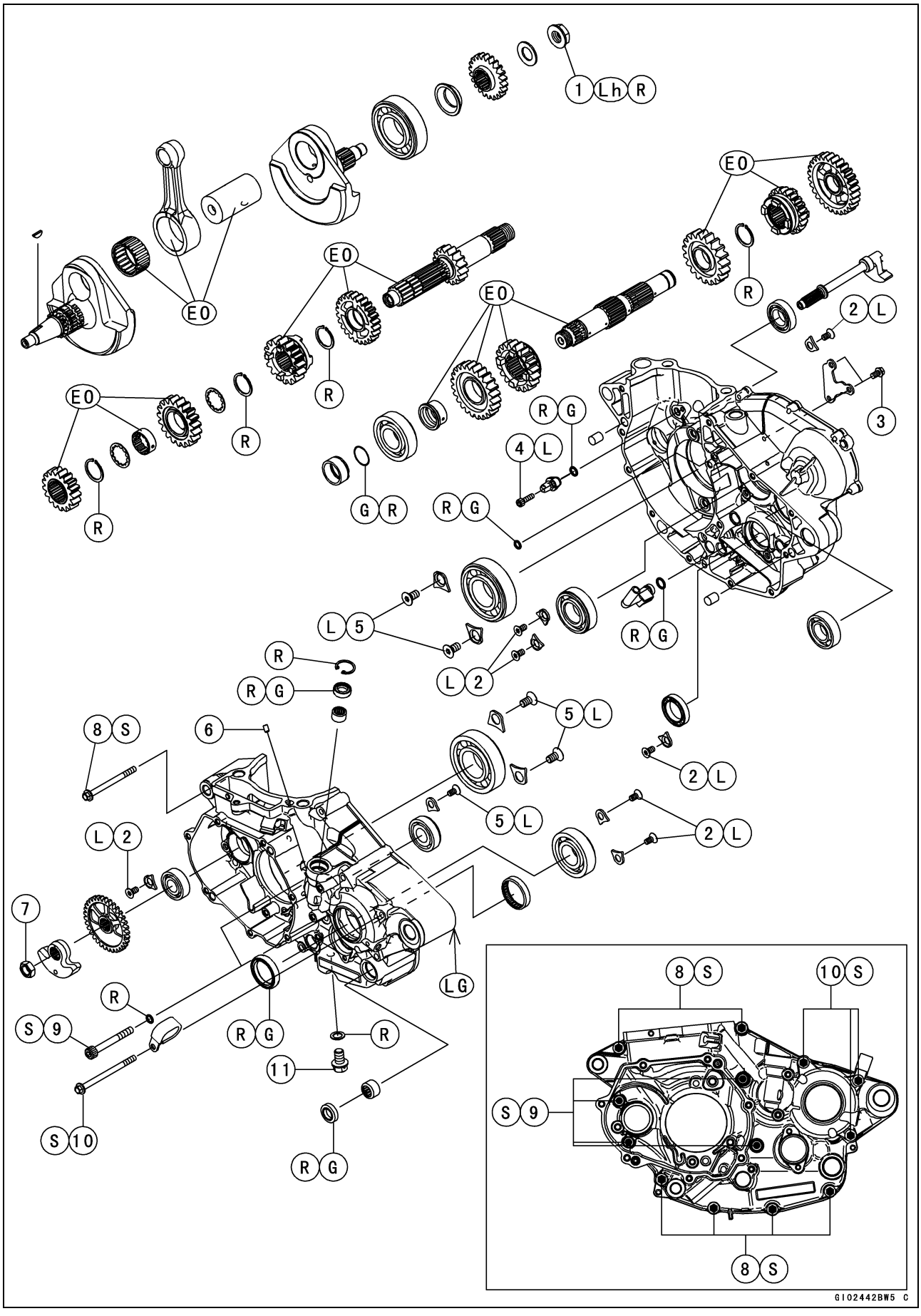

Exploded View

No.	Fastener	Torque			Remarks
		N·m	kgf·m	ft·lb	
1	Primary Gear Nut	100	10.2	73.8	Lh, R
2	Crankcase Bearing Retainer Screws (M6)	15	1.5	11	L
3	Breather Plate Bolts	7	0.71	62 in·lb	
4	Piston Oil Nozzle Bolt	7	0.71	62 in·lb	L
5	Crankcase Bearing Retainer Screws (M8)	25	2.5	18	L
6	Nozzle	3	0.31	27 in·lb	
7	Balancer Weight Mounting Nut	52	5.3	38	
8	Crankcase Bolts (M6, L= 50 mm)	12	1.2	106 in·lb	S
9	Crankcase Bolts (M7)	15	1.5	11	S
10	Crankcase Bolts (M6, L= 85 mm)	12	1.2	106 in·lb	S
11	Engine Oil Drain Bolt	20	2.0	15	

EO: Apply engine oil.
G: Apply grease.
L: Apply a non-permanent locking agent.
LG: Apply liquid gasket.
Lh: Left-hand Threads
R: Replacement Parts
S: Follow the specified tightening sequence.

Exploded View

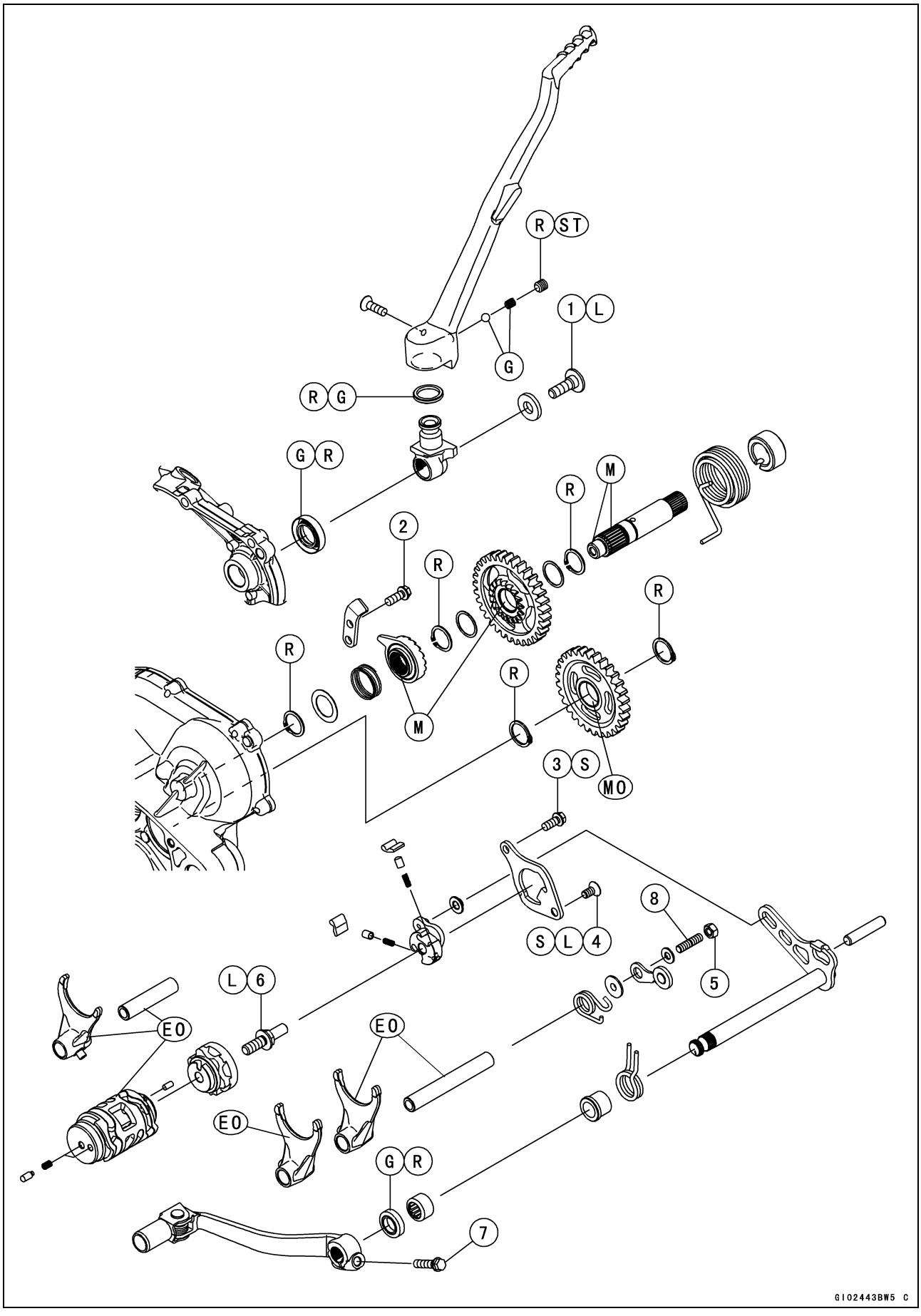

Exploded View

No.	Fastener	Torque			Remarks
		N·m	kgf·m	ft·lb	
1	Kick Pedal Bolt	35	3.6	26	L
2	Ratchet Guide Bolt	9.0	0.92	80 in·lb	
3	Ratchet Plate Bolt	10	1.0	89 in·lb	S
4	Ratchet Plate Screw	15	1.5	11	L, S
5	Gear Positioning Lever Nut	9.0	0.92	80 in·lb	
6	Shift Drum Cam Bolt	24	2.4	18	L
7	Shift Pedal Bolt	10	1.0	89 in·lb	

8. Face the round end outward.
EO: Apply engine oil.
G: Apply grease.
L: Apply a non-permanent locking agent.
M: Apply molybdenum disulfide grease.
MO: Apply molybdenum disulfide oil solution.
(mixture of the engine oil and molybdenum disulfide grease in a weight ratio 10:1)
R: Replacement Parts
S: Follow the specified tightening sequence.
St: Stake the fasteners to prevent loosening.

Specifications

Item	Standard	Service Limit
Crankshaft, Connection Rod		
Connecting Rod Big End:		
Radial Clearance	0.002 ~ 0.014 mm (0.00008 ~ 0.00055 in.)	0.06 mm (0.0024 in.)
Side Clearance	0.25 ~ 0.35 mm (0.0098 ~ 0.0138 in.)	0.6 mm (0.02 in.)
Crankshaft Runout	TIR 0.03 mm (0.001 in.) or less	TIR 0.08 mm (0.003 in.)
Connecting Rod Bend	– – –	TIR 0.2 mm (0.008 in.)/100 mm (3.94 in.)
Connecting Rod Twist	– – –	TIR 0.2 mm (0.008 in.)/100 mm (3.94 in.)
Transmission		
Shift Fork Ear Thickness	4.9 ~ 5.0 mm (0.193 ~ 0.197 in.)	4.8 mm (0.189 in.)
Gear Groove Width	5.05 ~ 5.15 mm (0.199 ~ 0.203 in.)	5.3 mm (0.209 in.)
Shift Fork Guide Pin Diameter	5.9 ~ 6.0 mm (0.232 ~ 0.236 in.)	5.8 mm (0.228 in.)
Shift Drum Groove Width	6.05 ~ 6.20 mm (0.238 ~ 0.244 in.)	6.3 mm (0.248 in.)

Special Tools and Sealant

Inside Circlip Pliers:
57001-143

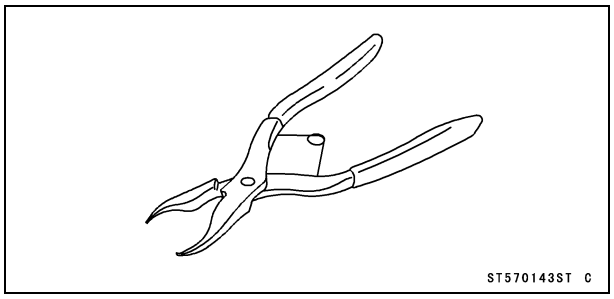

Outside Circlip Pliers:
57001-144

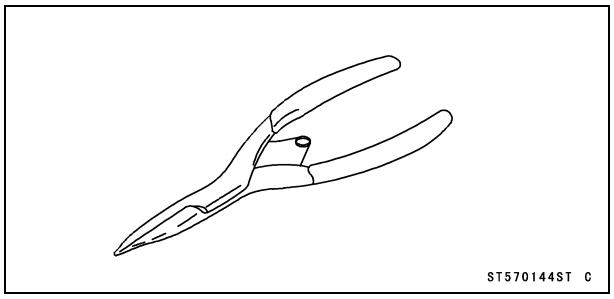

Bearing Driver Set:
57001-1129

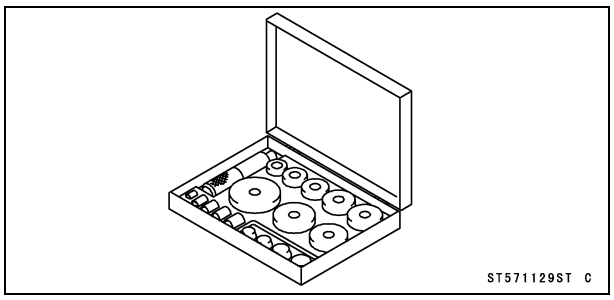

Crankshaft Jig:
57001-1174

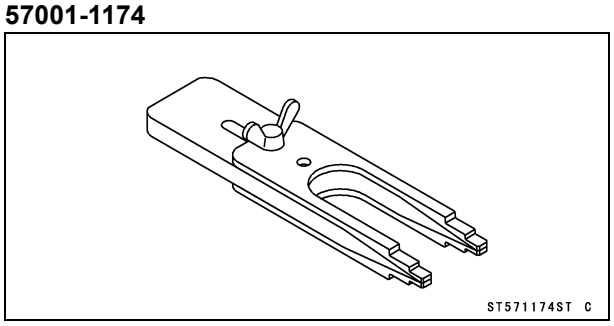

Crankcase Splitting Tool Assembly:
57001-1362

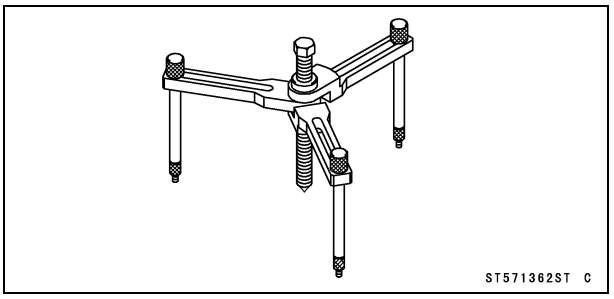

Grip:
57001-1591

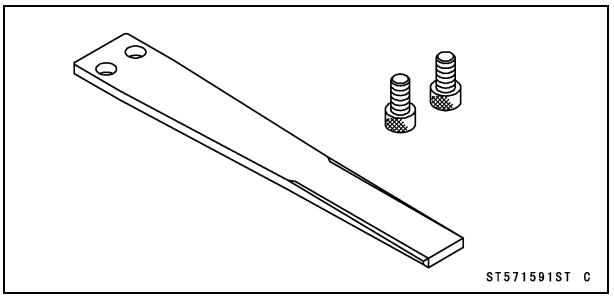

Rotor Holder:
57001-1730

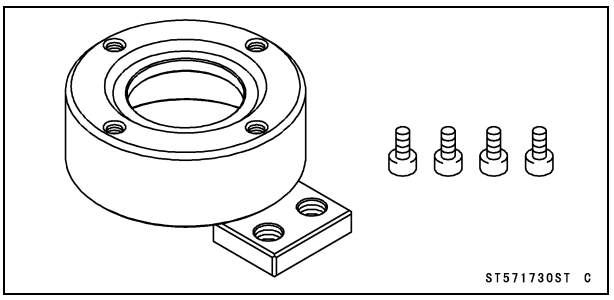

Liquid Gasket, TB1216:
92104-1063

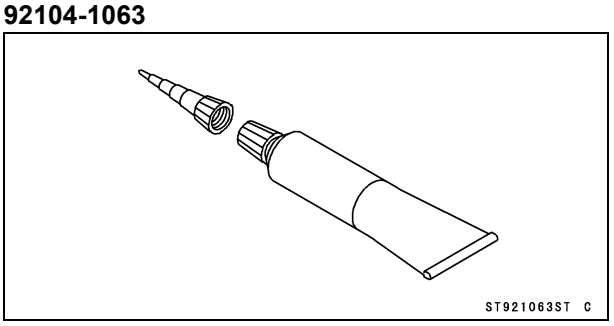

Crankcase

Crankcase Disassembly

- Remove the engine from the frame (see Engine Removal in the Engine Removal/Installation chapter).
- Set the engine on clean surface while parts are being removed.
- Remove:
  Piston (see Piston Removal in the Engine Top End chapter)
  Right Engine Cover (see Right Engine Cover Removal in the Clutch chapter)
  Clutch (see Clutch Removal in the Clutch chapter)
  Primary Gear (see Primary Gear Removal)
  Balancer (see Balancer Removal)
  Oil Pumps (see Oil Pump Removal in the Engine Lubrication System chapter)
  Kick Shaft Assembly (see Kick Shaft Removal)
  Kick Shaft Idle Gear (see Idle Gear Removal)
  External Shift Mechanism (see External Shift Mechanism Removal)
  Flywheel (see Flywheel Removal in the Electrical System chapter)
  Gear Position Switch (see Gear Position Switch Removal in the Fuel System (DFI) chapter)
  Release Shaft (see Release Shaft Removal in the Clutch chapter)
  Camshaft Chain Guide (see Camshaft Chain Removal in the Engine Top End chapter)
  Camshaft Chain (see Camshaft Chain Removal in the Engine Top End chapter)
  Oil Screen (Scavenge) (see Oil Screen (Scavenge) Removal in the Engine Lubrication System chapter)

- Slide the clamp [A] and remove the breather hose [B].

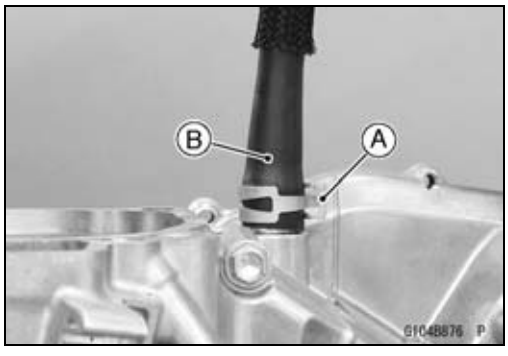

- Remove the output shaft collar [A] and the oil seal [B].

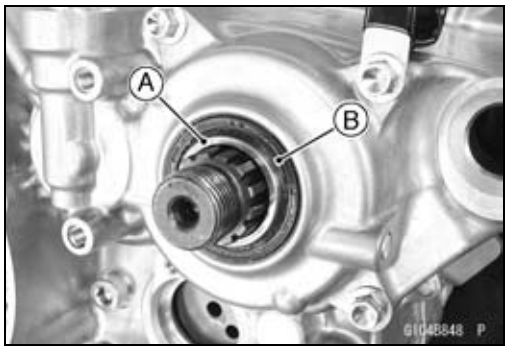

Crankcase

- Remove the O-ring [A].

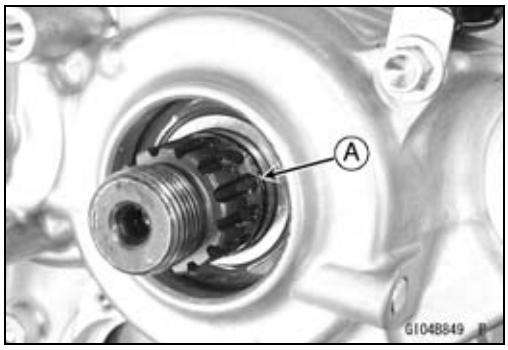

- Remove the circlip [A].

  Special Tool - Outside Circlip Pliers: 57001-144

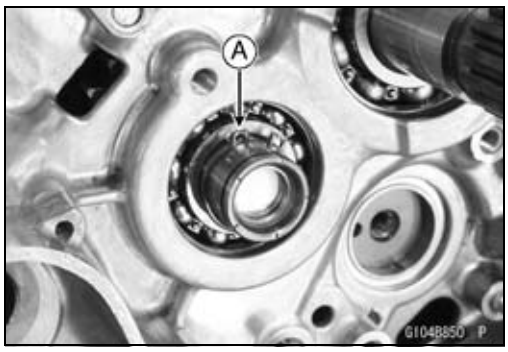

- Remove:
  Circlip [A]
  Balancer Drive Gear [B]

  Special Tool - Outside Circlip Pliers: 57001-144

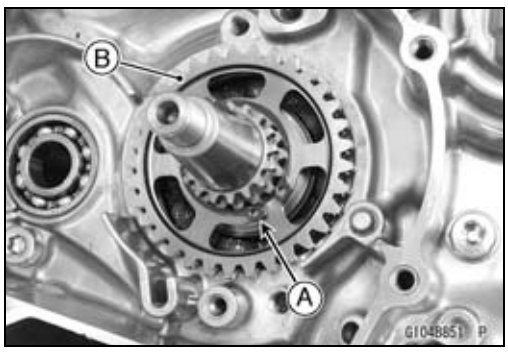

- Remove:
  Crankcase bolts [A]
  Washers [B]
  Clamp [C]

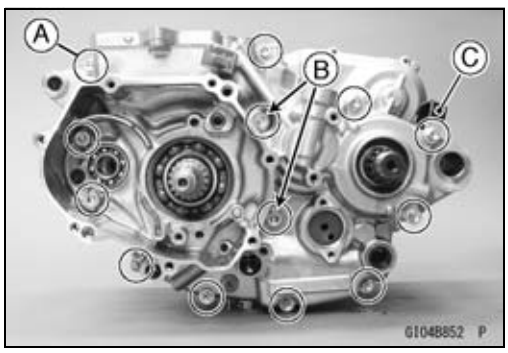

- Position the connecting rod at the bottom-dead-center.
- Install the crankshaft jig [A] between the crankshaft flywheels.

  Special Tool - Crankshaft Jig: 57001-1174

- Attach the crankcase splitting tool [B] to the left crankcase half.

○Install the suitable nut to the crankshaft end to protect the threads of the crankshaft.

  Special Tool - Crankcase Splitting Tool Assembly: 57001-1362

- Tighten the center bolt of the crankcase splitting tool to split the crankcase halves.

○The front and rear portion of the crankcase must be pulled apart evenly.

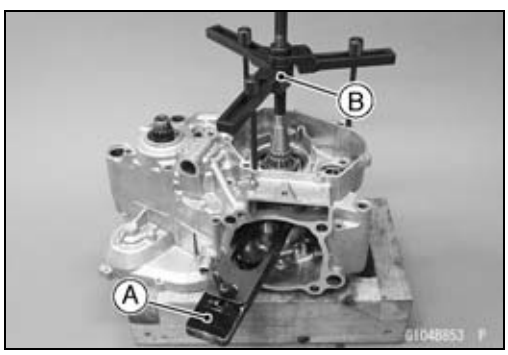

Crankcase

- Remove:
  Shift Rods [A] (see Transmission Shaft Removal)
  Shift Forks [B] (see Transmission Shaft Removal)
  Shift Drum [C] (see Transmission Shaft Removal)
  Transmission Shafts [D] (see Transmission Shaft Removal)
  Crankshaft [E] (see Crankshaft Removal)
  Transmission Oil Nozzle [F]

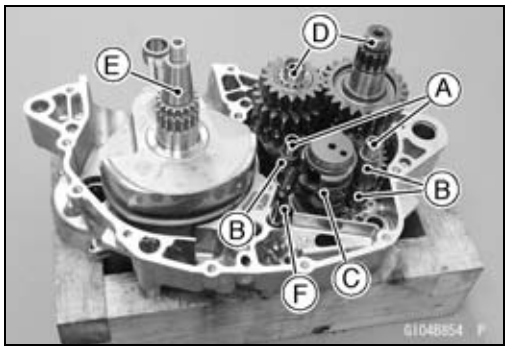

- Remove the oil screen (feed) [A].

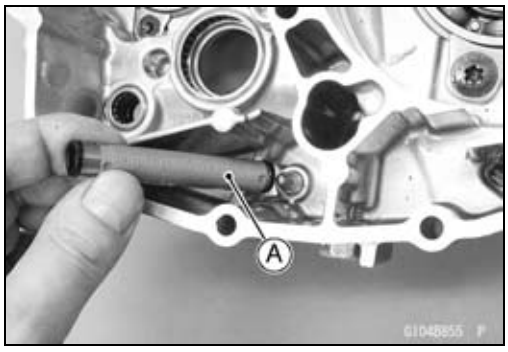

NOTICE
Do not remove the bearings and the oil seals unless it is necessary. **Removal may damage them.**

Crankcase Assembly

NOTICE
Right and left crankcase halves are machined at the factory in the assembled state, so if replaced, they must be replaced as a set.

- Remove the old gasket from the mating surfaces of the crankcase halves and clean them off with a high flash -point solvent.
- Using compressed air, blow out the oil passages in the crankcase halves.

⚠ WARNING
Gasoline and low flash-point solvents can be flammable and/or explosive and cause severe burns. Clean the engine parts in a well-ventilated area, and take care that there is no spark or flame anywhere near the working areas. Do not use gasoline or low flash-point solvents to clean parts.

Crankcase

- Support the crankcase bearing boss with a suitable retainer [A].
- Install a new bearing [B] using a press and the bearing driver set [C].

○Install the bearings except for the needle bearings until they bottom out.

Special Tool - Bearing Driver Set: 57001-1129

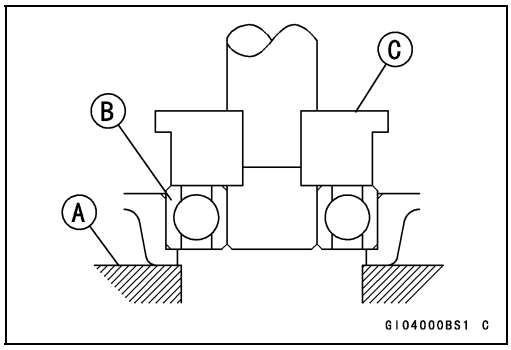

NOTICE
Support the crankcase bearing boss when the bearing is pressed, or the crankcase could be damaged.

- Press the new drive shaft bearing [A] and output shaft bearing [B] until they bottom out in the left crankcase half so that the stepped side [C] faces inside of the engine.

Special Tool - Bearing Driver Set: 57001-1129

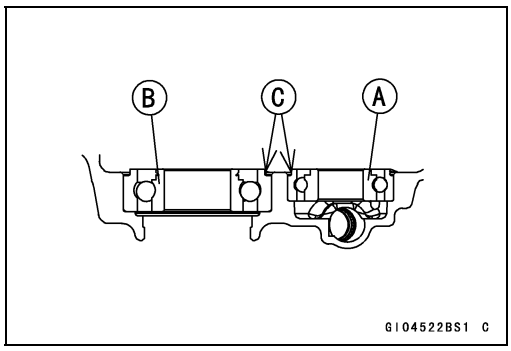

- Press the new drive shaft bearing [A] until it bottoms out in the right crankcase half so that the stepped side [B] faces inside of the engine.

Special Tool - Bearing Driver Set: 57001-1129

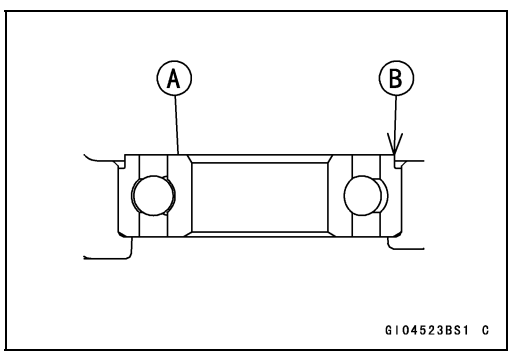

- Press the new crankshaft bearings [A] until they bottom out in the left and right crankcase halves so that the stepped side [B] faces inside of the engine.

Special Tool - Bearing Driver Set: 57001-1129

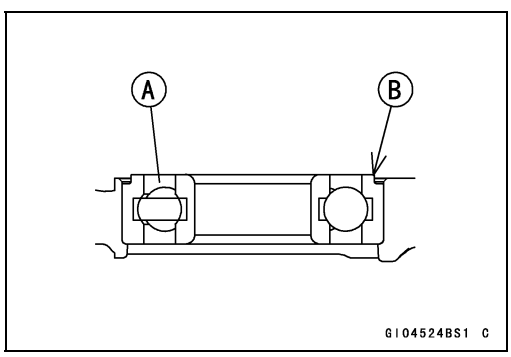

Crankcase

- Press the new shift drum needle bearing [A] and shift shaft needle bearing [B] in the left crankcase half so that bearing surface flush with the crankcase surface [C].

  Special Tool - Bearing Driver Set: 57001-1129

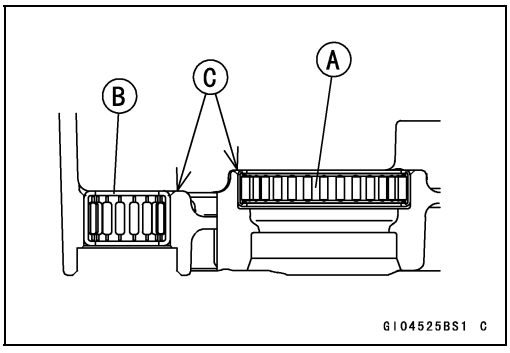

- Press the new shift drum bearing [A] in the right crankcase half so that the sealed side [B] faces outside of the engine.

  Special Tool - Bearing Driver Set: 57001-1129

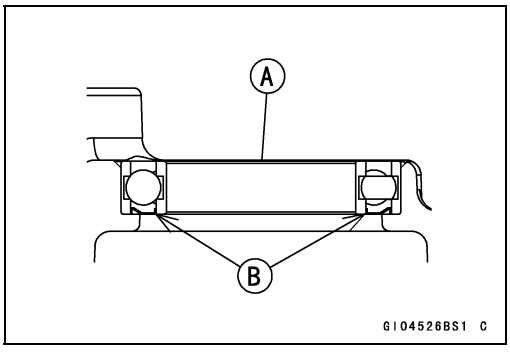

- Press the new release shaft needle bearing [A] until the surface of the bearing is even with the crankcase surface [B].

  Special Tool - Bearing Driver Set: 57001-1129

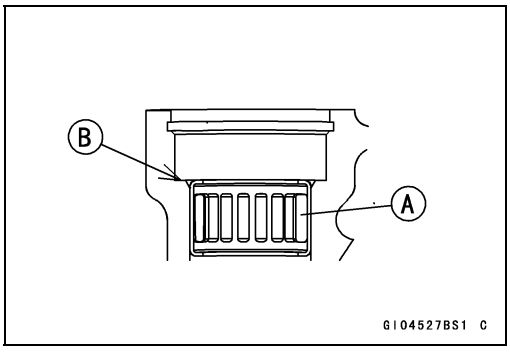

- Press the new release shaft oil seal [A] so that the oil seal lip [B] faces to the engine outside, and the oil seal surface is flush with the left crankcase groove [C].

  Special Tool - Bearing Driver Set: 57001-1129

- Apply grease to the oil seal lip.
- Install the new circlip [D].

  Special Tool - Inside Circlip Pliers: 57001-143

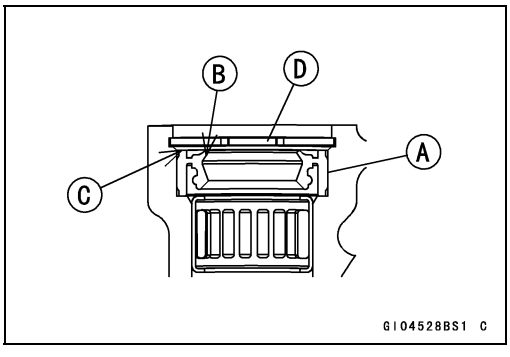

- Press the new shift shaft oil seal [A] so that the flat side [B] faces to the engine outside.

○Press the oil seal from the outside (clutch cover side) so that the oil seal end is flush with the crankcase surface [C].

  Special Tool - Bearing Driver Set: 57001-1129

- Apply grease to the oil seal lip.

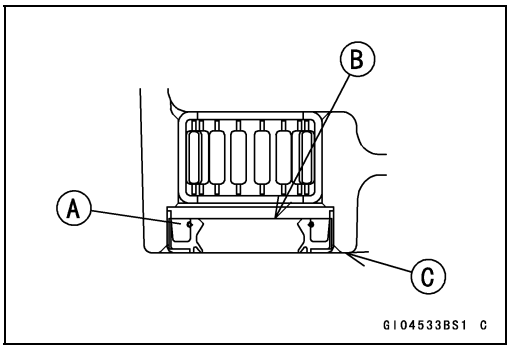

Crankcase

- Install the crankcase bearing retainers so that the chamfered side faces inside of the engine.
- Apply a non-permanent locking agent to the threads of the crankcase bearing retainer screws (M8) [A] and crankcase bearing retainer screws (M6) [B].
- Tighten:

  Torque - Crankcase Bearing Retainer Screws (M8): 25 N·m (2.5 kgf·m, 18 ft·lb)
  Crankcase Bearing Retainer Screws (M6): 15 N·m (1.5 kgf·m, 11 ft·lb)

  Right Crankcase Half [C]
  Left Crankcase Half [D]

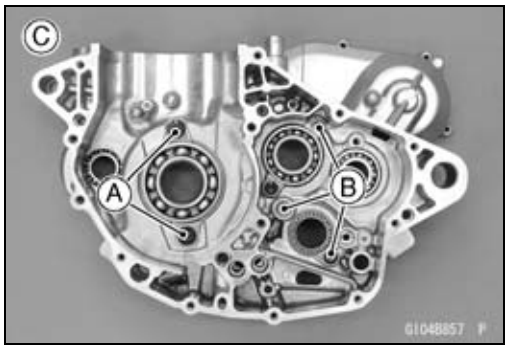

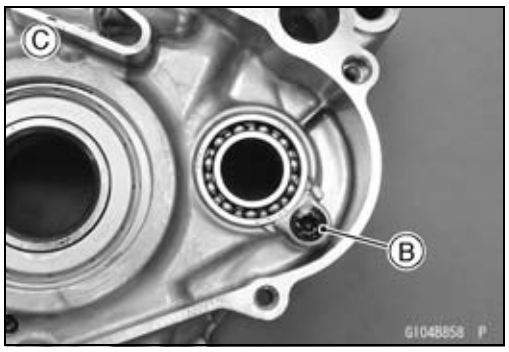

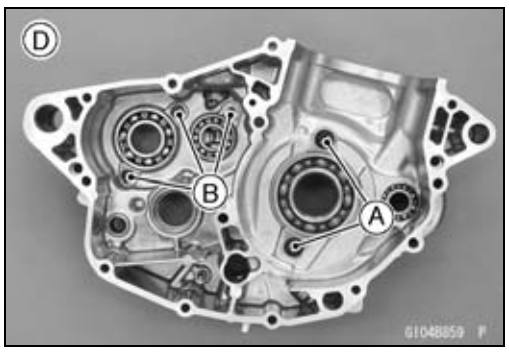

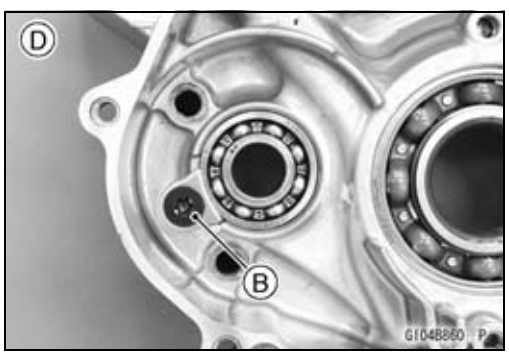

- Install the breather plate [A] in the left crankcase half and tighten the breather plate bolts [B].

  Torque - Breather Plate Bolts: 7.0 N·m (0.71 kgf·m, 62 in·lb)

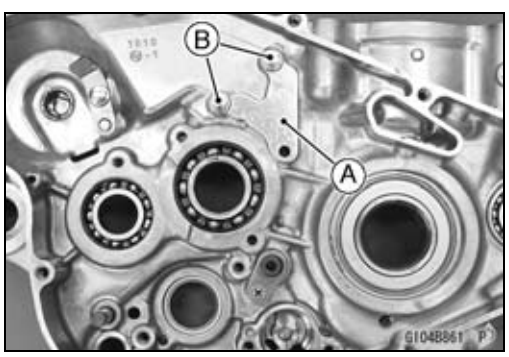

Crankcase

- Install the nozzle [A] and tighten it.

  Torque - Nozzle: 3.0 N·m (0.31 kgf·m, 27 in·lb)

- Replace the O-ring [A] with a new one.
- Apply grease to the O-ring and install it to the piston oil nozzle [B].

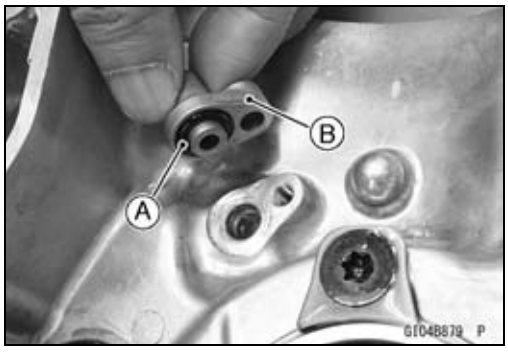

- Apply a non-parmanent locking agent to the threads of the piston oil nozzle bolt [A].
- Tighten:

  Torque - Piston Oil Nozzle Bolt: 7.0 N·m (0.71 kgf·m, 62 in·lb)

- Install:
  Crankshaft (see Crankshaft Installation)
  Transmission Shafts (see Transmission Shaft Installation)

- Replace the O-ring [A] with a new one.
- Apply grease to the O-ring and install it to the transmission oil nozzle [B].
- Install the transmission oil nozzle so that the tab [C] fits on the crankcase groove [D].

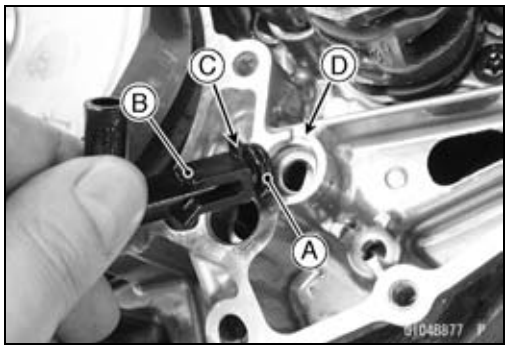

Crankcase

- Install the oil screen (feed) [A] to the guide [B] on the right crankcase so that the non-mesh area [C] faces to the right crankcase side.

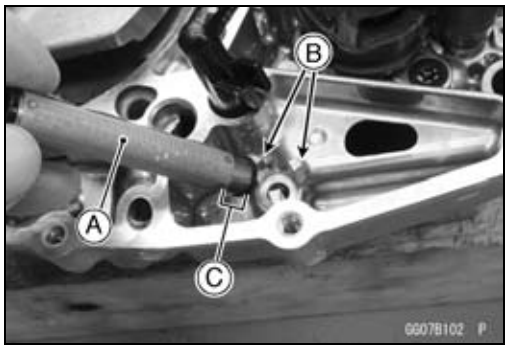

- Replace the O-ring [A] with a new one, and apply grease.
- Install:
  Dowel Pins [B]
  O-ring

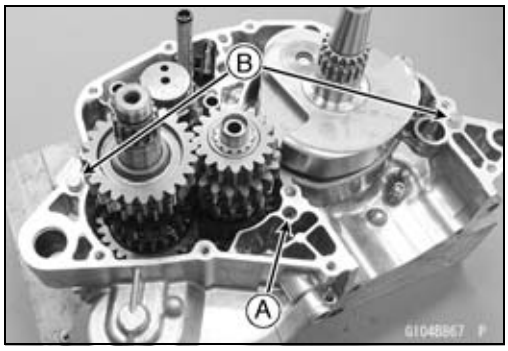

Crankcase

- Using a high flash-point solvent, clean off any oil or dirt that may be on the liquid gasket coating area. Dry them with a clean cloth.
- Apply liquid gasket to the mating surface [A] of the left crankcase half.

○Be careful not apply liquid gasket to the inside [B] of the cylinder.

Sealant - Liquid Gasket, TB1216: 92104-1063

NOTE

○*Make the application finish within 20 minutes when the liquid gasket to the mating surface of the left crankcase half is applied.*

○*Moreover fit the case and tighten the case bolts just after finishing the application of the liquid gasket.*

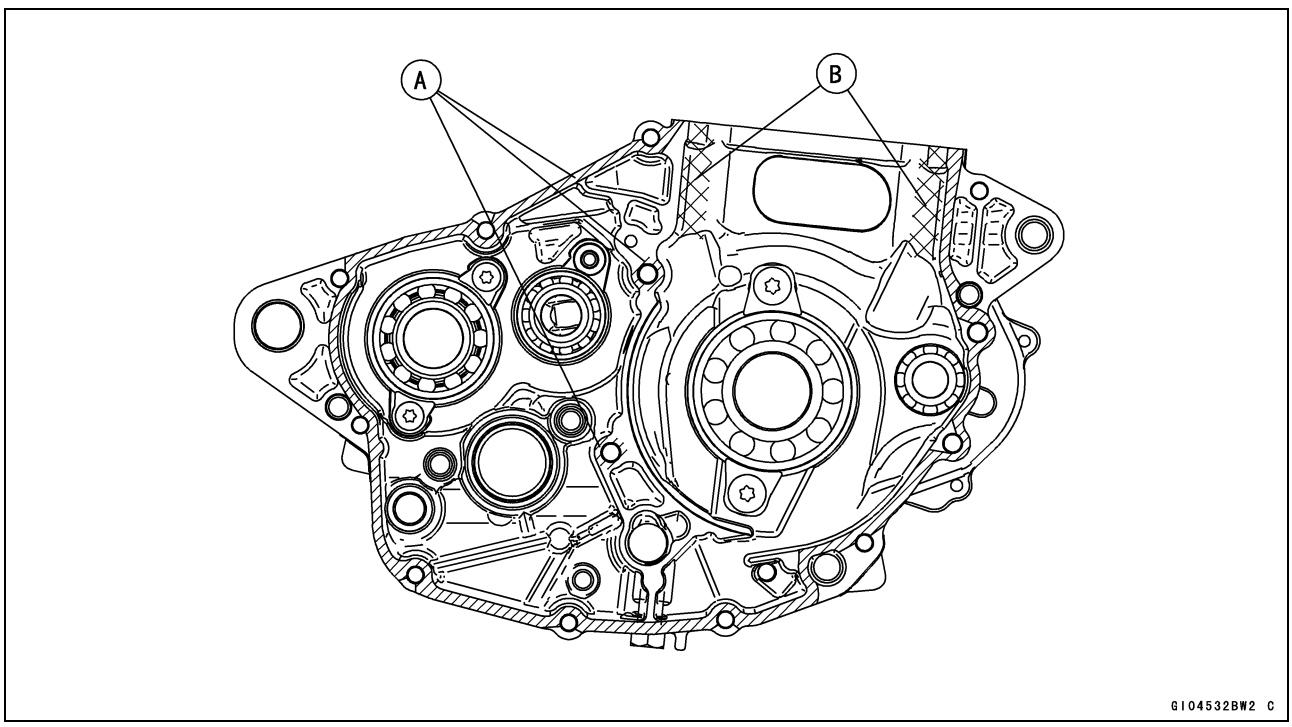

- Position the connecting rod at the bottom-dead-center.
- Install the crankshaft jig [A] between the crankshaft flywheels.

Special Tool - Crankshaft Jig: 57001-1174

- Fit the left crankcase half to the right crankcase half.
- Using a plastic hammer, press the rear portion of the crankcase, and tap the area around the crankshaft of the left crankcase half. While maintaining the mating surfaces of the right and left crankcase halves constantly parallel, mate the crankcase halves evenly.

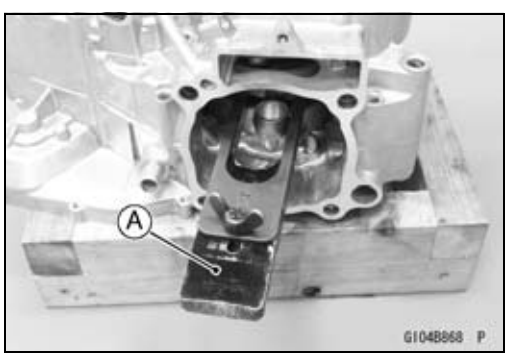

NOTE

○*Constantly check the alignment of the two crankcase halves, and the position of the transmission shafts and shift drum. The front and rear of the crankcase must be pushed together evenly.*

○*Be sure to install the oil screen (feed).*

Crankcase

- Replace the washers [A] with new ones.
- Tighten the crankcase bolts using the following steps.
- Install the clamp [B].
- Tighten the crankcase bolts in the numbered sequence [1 ~ 13].

Torque - Crankcase Bolts (M7) [C]: 15 N·m (1.5 kgf·m, 11 ft·lb)
Crankcase Bolts (M6, L= 50 mm) [D]: 12 N·m (1.2 kgf·m, 106 in·lb)
Crankcase Bolts (M6, L= 85 mm) [E]: 12 N·m (1.2 kgf·m, 106 in·lb)

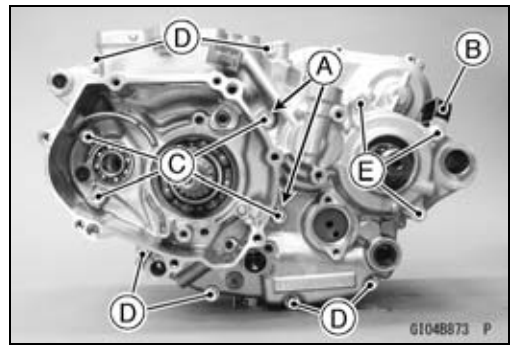

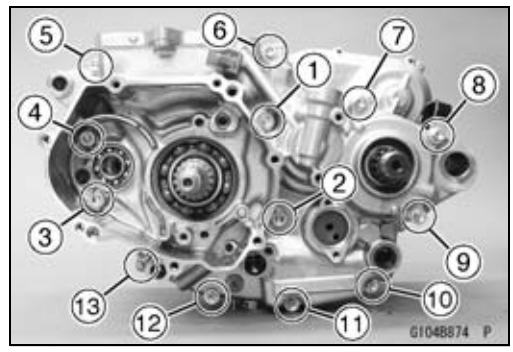

NOTE

○*After tightening the crankcase bolts, wipe up the liquid gasket seeping out around the mating surface, especially around the area.*

- Make sure that the crankshaft, drive shaft, and output shaft rotate smoothy (in the neutral position).

★If the crankshaft will not turn, probably the crankshaft is not centered; install the crankshaft jig at the bottom-dead -center, and tap the appropriate end of the crankshaft with a mallet to reposition it.

Special Tool - Crankshaft Jig: 57001-1174

- Install:
  Gear Positioning Lever (see External Shift Mechanism Installation)
  Shift Drum Cam (see External Shift Mechanism Installation)
- Check to see that gears shift smoothly from 1st to 5th gear, and 5th to 1st while spinning the output shaft.
- Set the shift drum in the neutral position.

- Replace the O-ring [A] on the output shaft with a new one.
- Apply grease to the O-ring.
- Install the O-ring on the output shaft while expanding the O-ring.

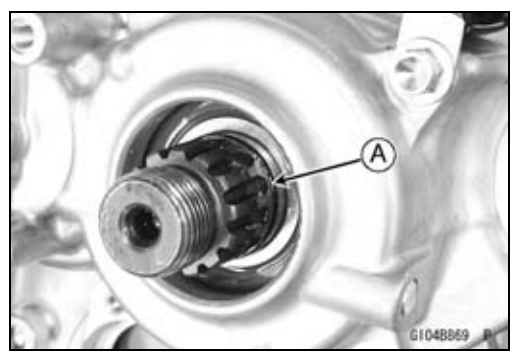

Crankcase

- Press the new oil seal [A] so that the flat side faces to the engine outside.

○Press the oil seal from the outside (clutch cover side) so that the oil seal end is flush with the crankcase surface.

Special Tool - Bearing Driver Set: 57001-1129

- Apply grease to the oil seal lip.
- Insert the collar [B] with the groove [C] faces inside.

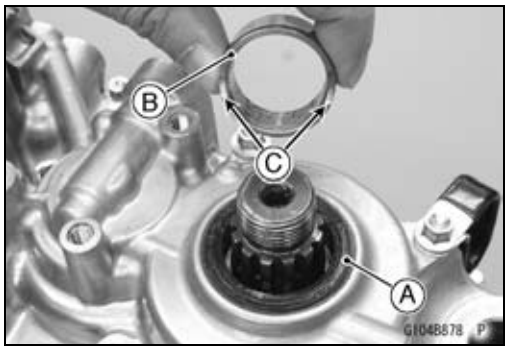

- Install the balancer drive gear [A] to the crankshaft so that the wide groove [B] of the drive gear fits to the wide tooth [C] on the crankshaft.
- Replace the circlip with a new one, and install it.

Special Tool - Outside Circlip Pliers: 57001-144

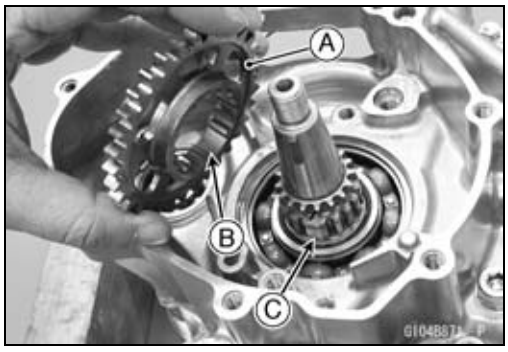

- Replace the circlip [A] with a new one, and install it to the output shaft.

Special Tool - Outside Circlip Pliers: 57001-144

- Install the removed parts (see appropriate chapters).

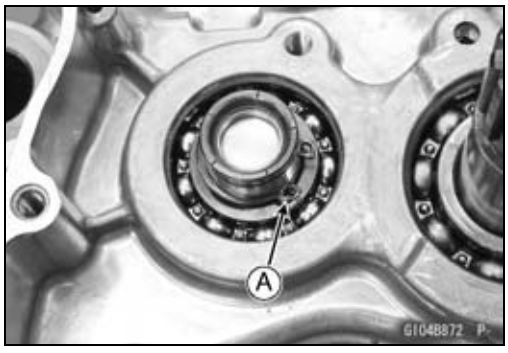

Crankshaft

Crankshaft Removal

- Split the crankcase (see Crankcase Disassembly).
- Remove the crankshaft [A] from the right crankcase half [B].

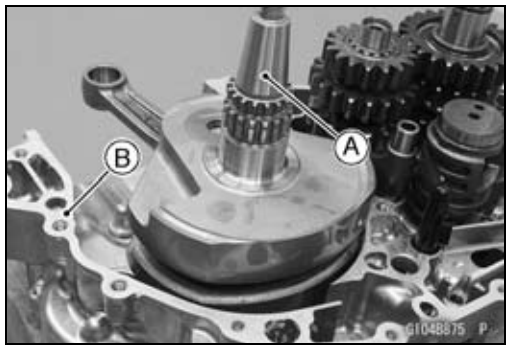

Crankshaft Installation

- Install the crankshaft to the right crankcase half.
- Apply engine oil to the connecting rod big end bearing.

Crankshaft Disassembly

Since assembly of the crankshaft demands exacting tolerances, the disassembly and reassembly of the crankshaft can only be done by a shop having the necessary tools and equipment.

★If it should be necessary to disassemble the crankshaft, use a press to remove the crankpin.

Crankshaft Assembly

Since the assembly of the crankshaft demands exacting tolerances, the disassembly and reassembly of the crankshaft can only be done by a shop having the necessary tools and equipment.

- Reassemble the crankshaft according to the standard tolerances in Specifications.

○Connecting rod bend, twist (see Connecting Rod Bend Inspection, Connecting Rod Twist Inspection)
○Connecting rod big end radial clearance (see Crankshaft Inspection)
○Cold-fitting tolerance between crankpin and flywheels
0.8 ~ 1.2 mm (0.03 ~ 0.05 in.) [A]
64.3 mm (2.53 in.) [B]
○Side clearance between the connecting rod big end and one of flywheels (see Crankshaft Inspection)
○Crankshaft runout (see Crankshaft Inspection)

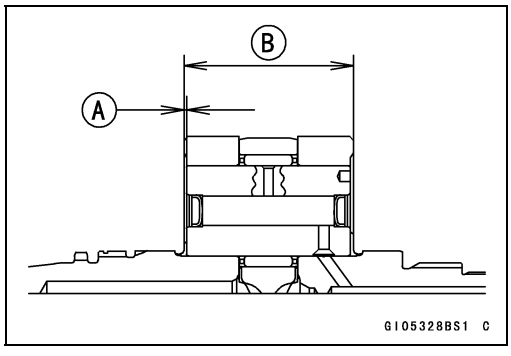

- Carefully align the oil passage hole in the right flywheel [A] with the one in the crankpin [B] at rebuilding of the crankshaft as shown.

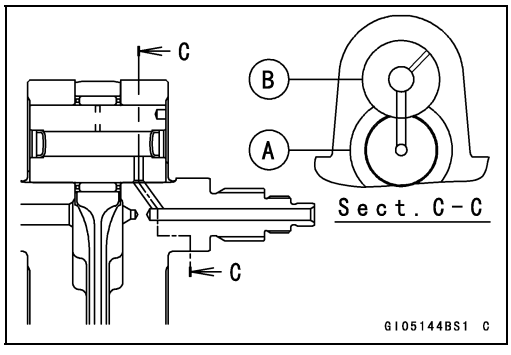

Crankshaft

Crankshaft Inspection

Connecting Rod Big End Radial Clearance Inspection

- Set the crankshaft on V blocks, and place a dial gauge [A] against the connecting rod big end.
- Push [B] the connecting rod first towards the gauge and then in the opposite direction. The difference between two gauge readings is the radial clearance.

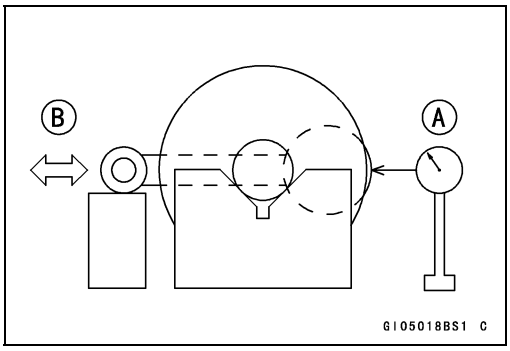

Connecting Rod Big End Radial Clearance

Standard:	**0.002 mm ~ 0.014 mm (0.00008 ~ 0.00055 in.)**
Service Limit:	**0.06 mm (0.0024 in.)**

★If the radial clearance exceeds the service limit, crankshaft should be either replaced or disassembled and crankpin, needle bearing, and connecting rod big end should be examined for wear.

Connecting Rod Big End Side Clearance Inspection

- Refer to the Crankshaft Inspection in the Periodic Maintenance chapter.

Crankshaft Runout Inspection

- Set the crankshaft in a flywheel alignment jig or on V blocks, and place a dial gauge as shown and turn the crankshaft slowly. The maximum difference in gauge reading is the crankshaft runout.
  8.5 mm (0.33 in.) [A]

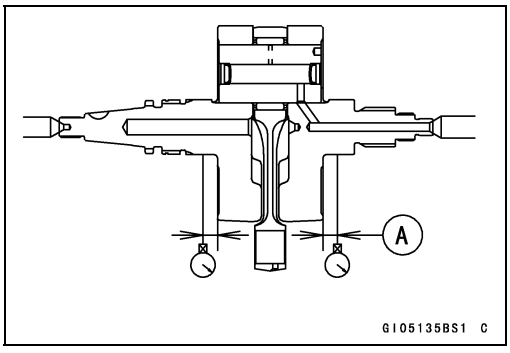

Crankshaft Runout

Standard:	**TIR 0.03 mm (0.001 in.) or less**
Service Limit:	**TIR 0.08 mm (0.003 in.)**

★If the runout at either point exceeds the service limit, replace the crankshaft assembly with a new one or align the crankshaft so that the runout falls within the service limit.

- First correct the horizontal misalignment by striking the projecting crank half [A] with a plastic, soft lead, or brass hammer as shown.
- Recheck the runout with a dial gauge and repeat the process until the runout falls within the service limit.

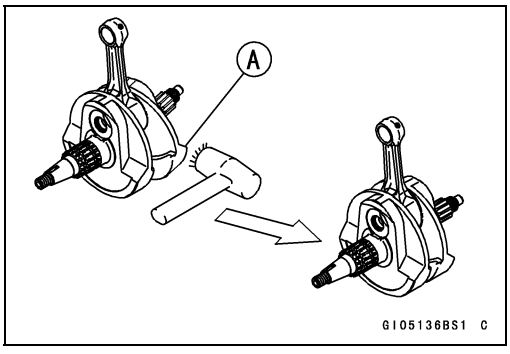

Crankshaft

- Next, correct the vertical misalignment by either driving a wedge [A] in between the crank halves or by squeezing them in a vise, depending on the nature of the misalignment.

NOTICE
Do not hammer the crank half at the point [B].

★If flywheel misalignment cannot be corrected by the above method, replace the crankpin or the crankshaft itself.

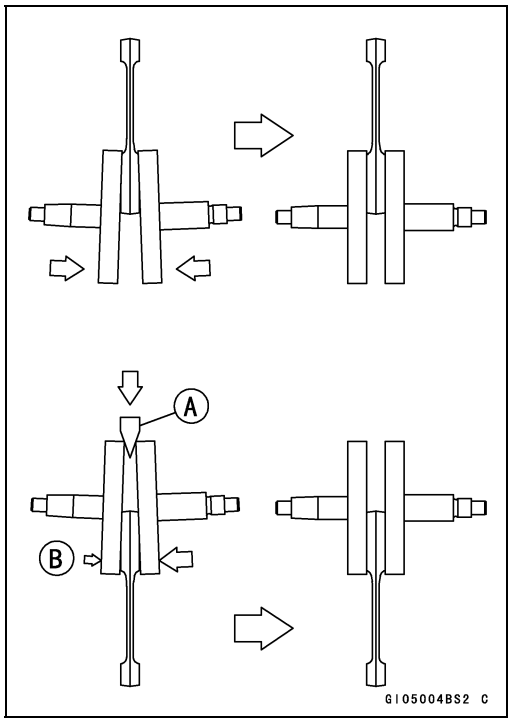

Connecting Rod Big End Seizure Inspection

★In case of serious seizure with damaged flywheels, the crankshaft must be replaced.

★In case of less serious damage, disassemble the crankshaft and replace the crankpin, needle bearing, and connecting rod.

Connecting Rod Bend Inspection

- Remove the connecting rod.
- Select an arbor [A] of the same diameter as the connecting rod big end, and insert the arbor through the connecting rod big end.
- Select an arbor [B] of the same diameter as the piston pin and more than 105 mm (4.13 in.) long, and insert the arbor through the connecting rod small end.
- On a surface plate, set the big-end arbor on a V block [C].
- With the connecting rod held vertically, use a height gauge to measure the difference in the height of the arbor above the surface plate over a 100 mm (3.94 in.) length to determine the amount of connecting rod bend.

★If connecting rod bend exceeds the service limit, the connecting rod must be replaced.

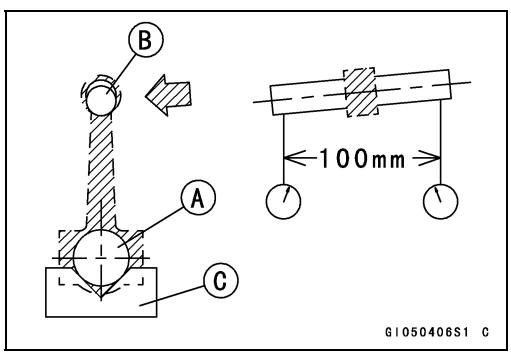

Connecting Rod Bend

Service Limit: TIR 0.2/100 mm (0.008/3.94 in.)

Crankshaft

Connecting Rod Twist Inspection

- With the big-end arbor [A] still on the V block [C], hold the connecting rod horizontally and measure the amount that the arbor [B] varies from being parallel with the surface plate over a 100 mm (3.94 in.) length of the arbor to determine the amount of connecting rod twist.

★If connecting rod twist exceeds the service limit, the connecting rod must be replaced.

Connecting Rod Twist
Service Limit: TIR 0.2/100 mm (0.008/3.94 in.)

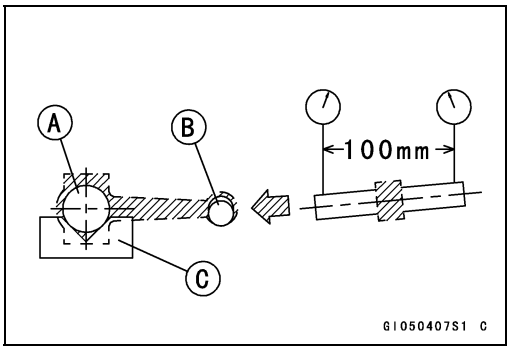

Transmission

Transmission Shaft Removal

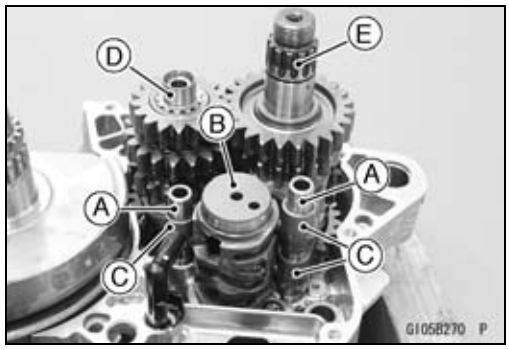

- Split the crankcase (see Crankcase Disassembly).
- Pull out the shift rods [A] allowing the shift fork guide pins to free from the shift drum [B].
- Remove:
  Shift Drum
  Shift Forks [C]
- Pull out the drive shaft [D] and output shaft [E] together with their gears meshed.

Transmission Shaft Installation

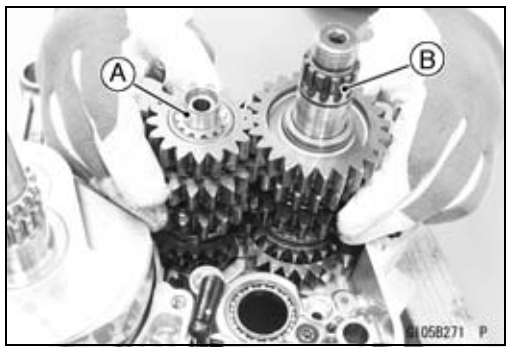

- Apply engine oil to the sliding portion of the transmission shaft, gears, and ball bearings.
- Install the drive shaft [A] and output shaft [B] in the right crankcase half with their gears meshed.

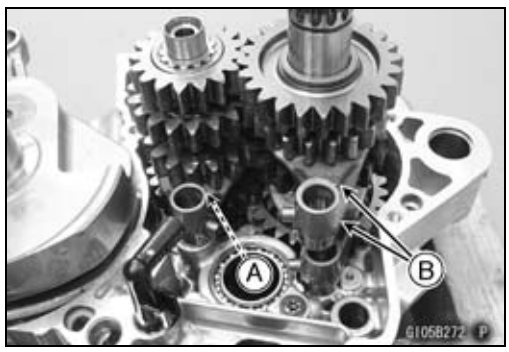

- Apply a small amount of engine oil to the shift fork fingers and fit each shift fork into the groove of the proper gear.
  ○Install the shift fork of the drive shaft with its mark [A] facing the engine right side.
  ○Install the shift forks of the output shaft with its marks [B] facing the engine left side.

  Marks: 647 (Drive shaft)
  648 (Output shaft)

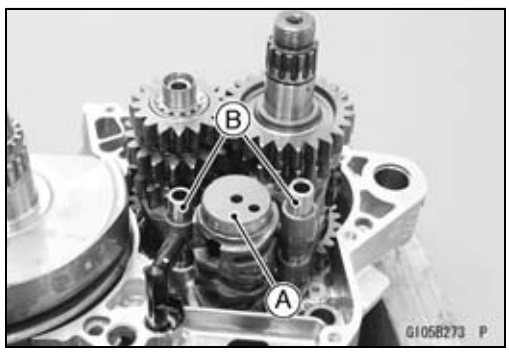

- Install the shift drum [A].
- Fit each shift fork guide pin into the corresponding groove in the shift drum.
- Apply a small amount of engine oil to the shift rods [B] and slide them into the shift forks.
- Assembly the crankcase (see Crankcase Assembly).

Transmission Shaft Disassembly

- Remove the transmission shafts (see Transmission Shaft Removal).
- Remove the circlips, washers, collar and gears.

Special Tool - Outside Circlip Pliers: 57001-144

NOTE

○*Do not reuse the removed circlips.*

Transmission

Transmission Shaft Assembly

- Apply engine oil liberally to the transmission shaft, gears and bearings.
- Replace any circlips that were removed with new ones.

○Always install the circlips [A] so that the opening [B] is aligned with a spline groove [C], and install toothed washers. To install a circlip without damage, first fit the circlip onto the shaft expanding it just enough to install it, and then use a suitable gear to push the circlip into place.

Special Tool - Outside Circlip Pliers: 57001-144

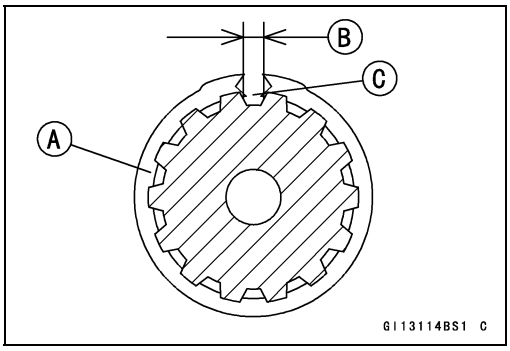

- When install the bushing (for 4th) [A] to the drive shaft, align the oil passage holes [B] each other.

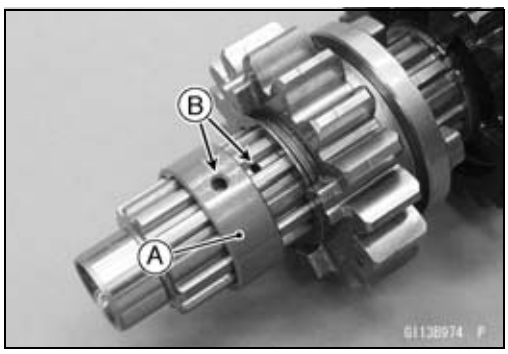

- The drive shaft gears can be identified by size; the smallest diameter gear is 1st gear, and the largest is 5th. Be sure that all parts are put back in the correct sequence, facing the proper direction, and that all circlips and the washers are properly in place.

- The output shaft gears can be identified by size; the largest diameter gear is 1st gear, and the smallest is 5th. Be sure that all parts are put back in the correct sequence, facing the proper direction, and that the circlip and collar are properly in place.

Transmission

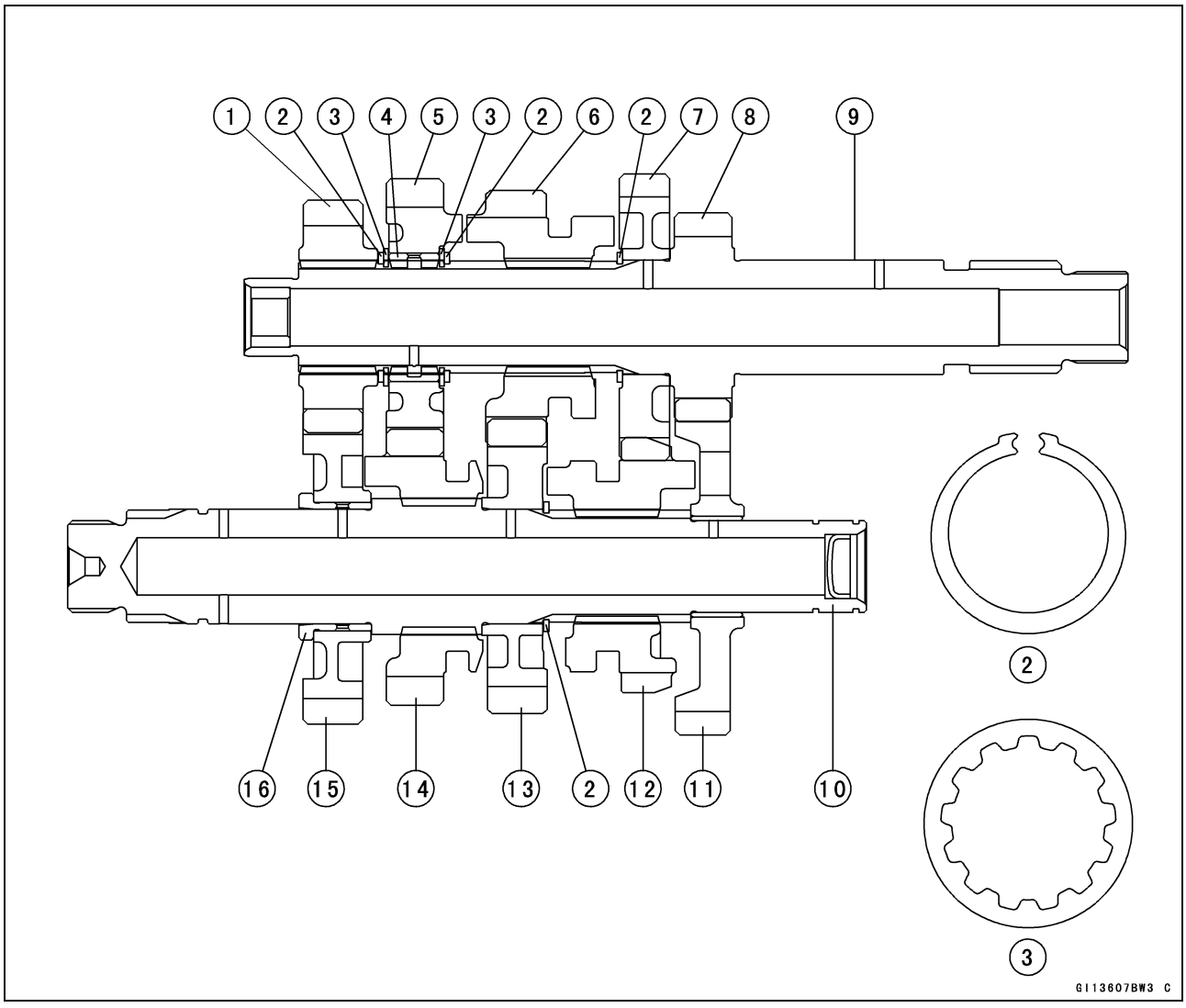

1. 2nd Gear (17T)
2. Circlip
3. Toothed Washer
4. Bushing
5. 4th Gear (19T)
6. 3rd Gear (16T)
7. 5th Gear (24T)
8. 1st Gear (16T)
9. Drive Shaft
10. Output Shaft
11. 1st Gear (28T)
12. 5th Gear (21T)
13. 3rd Gear (19T)
14. 4th Gear (19T)
15. 2nd Gear (24T)
16. Collar

- Check that each gear spins or slides freely on the transmission shaft without binding after assembly.

Transmission

Shift Fork Bending Inspection

- Visually inspect the shift forks, and replace any fork that is bent. A bent fork could cause difficulty in shifting, or allow the transmission to jump out of gear when under power.
  90° [A]

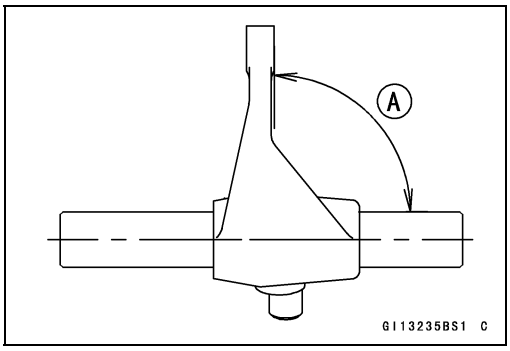

Shift Fork/Gear Groove Wear Inspection

- Measure the thickness [A] of the shift fork ears, and measure the width [B] of the gear grooves (with which the fork engages).

  Shift Fork Ear Thickness

  Standard: 4.9 ~ 5.0 mm (0.193 ~ 0.197 in.)

  Service Limit: 4.8 mm (0.189 in.)

  Gear Groove Width

  Standard: 5.05 ~ 5.15 mm (0.199 ~ 0.203 in.)

  Service Limit: 5.3 mm (0.209 in.)

★If the thickness of a shift fork ear is less than the service limit, the shift fork must be replaced.

★If the gear groove is worn exceeding the service limit, the gear must be replaced.

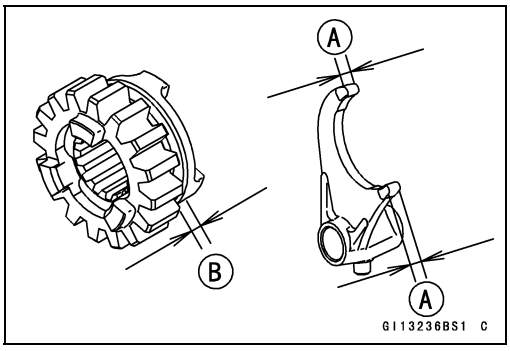

Shift Fork Guide Pin/Shift Drum Groove Wear Inspection

- Measure the diameter [A] of each shift fork guide pin, and measure the width [B] of each shift drum groove.

  Shift Fork Guide Pin Diameter

  Standard: 5.9 ~ 6.0 mm (0.232 ~ 0.236 in.)

  Service Limit: 5.8 mm (0.228 in.)

  Shift Drum Groove Width

  Standard: 6.05 ~ 6.20 mm (0.238 ~ 0.244 in.)

  Service Limit: 6.3 mm (0.248 in.)

★If the guide pin on any shift fork is less than the service limit, the fork must be replaced.

★If any shift drum groove is worn exceeding the service limit, the drum must be replaced.

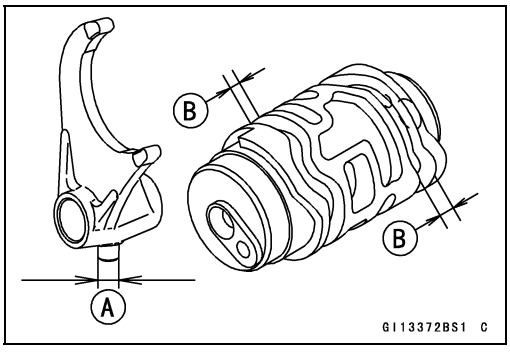

Gear Damage Inspection

- Visually inspect the gear dogs [A] and gear dog holes [B].

★Replace any damaged gears or gears with excessively worn dogs or dog holes.

- Visually inspect the gear teeth [C] on the transmission gears.

★The gear must be replaced if the teeth are badly damaged.

★When gear is repaired or replaced, the driving gear should also be inspected and repaired or replaced if necessary.

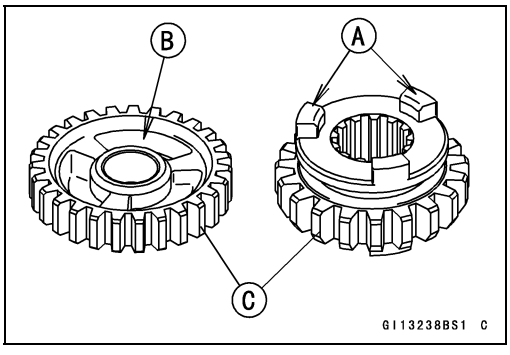

Balancer

Balancer Removal

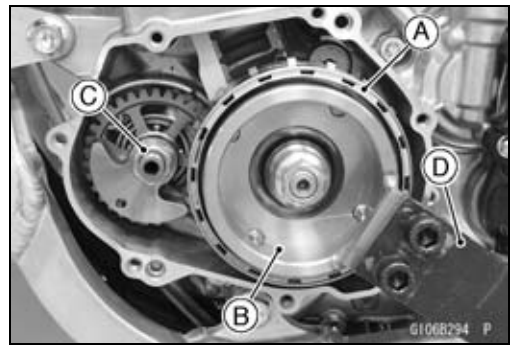

- Remove:
  Magneto Cover (see Magneto Cover Removal in the Electrical System chapter)
- Hold the flywheel [A] steady with the rotor holder [B], and loosen the balancer weight mounting nut [C].

  Special Tools - Grip [D]: 57001-1591
  Rotor Holder: 57001-1730
- Remove:
  Right Engine Cover (see Right Engine Cover Removal in the Clutch chapter)

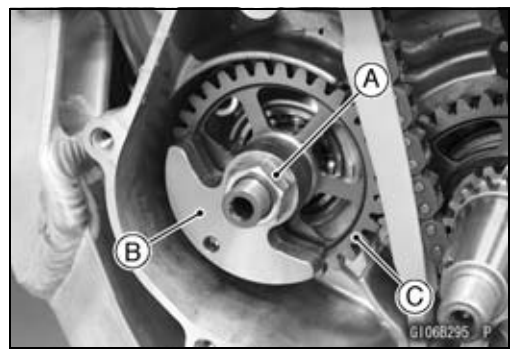

- Remove:
  Flywheel (see Flywheel Removal in the Electrical System chapter)
  Balancer Weight Mounting Nut [A]
  Balancer Weight [B]
  Balancer Gear [C]

- Pull out the balancer shaft [A] from the right crankcase half.

Balancer Installation

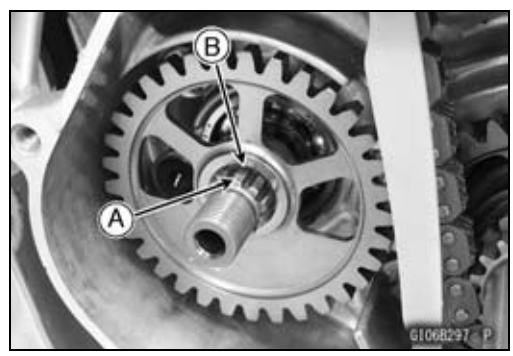

- Insert the balancer shaft from the right crankcase half.
- Install the balancer gear so that the stepped portion [A] on the balancer shaft is aligned with the short length tooth [B] on the balancer gear.

Balancer

- Align the punch mark [A] on the balancer drive gear and punch mark [B] on the balancer gear.

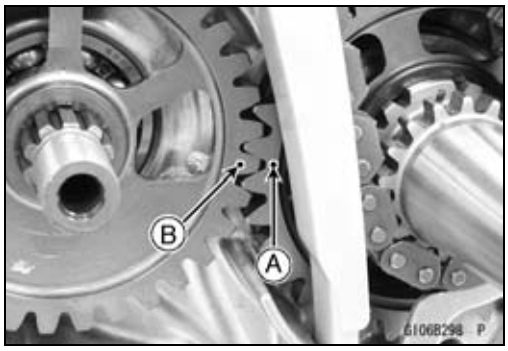

- Install the balancer weight.

○Align the punch mark [A] on the balancer weight and punch mark [B] on the balancer gear.

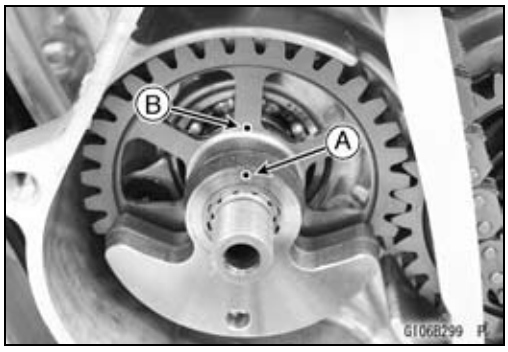

- Install the flywheel [A] (see Flywheel Installation in the Electrical System chapter).
- Hold the flywheel steady with the rotor holder [B], and tighten the balancer weight mounting nut [C].

Special Tools - Grip: 57001-1591
Rotor Holder: 57001-1730

Torque - Balancer Weight Mounting Nut: 52 N·m (5.3 kgf·m, 38 ft·lb)

- Install the removed parts (see appropriate chapters).

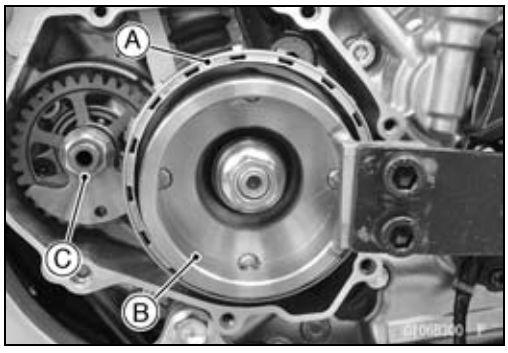

Primary Gear

Primary Gear Removal

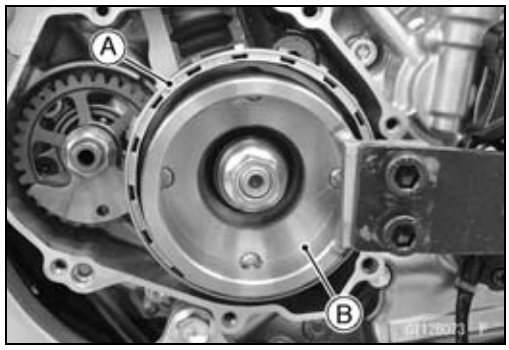

- Remove:
  Right Engine Cover (see Right Engine Cover Removal in the Clutch chapter)
  Clutch (see Clutch Removal in the Clutch chapter)
  Magneto Cover (see Magneto Cover Removal in the Electrical System chapter)
- Hold the flywheel [A] steady with the rotor holder [B].

Special Tools - Grip: 57001-1591
Rotor Holder: 57001-1730

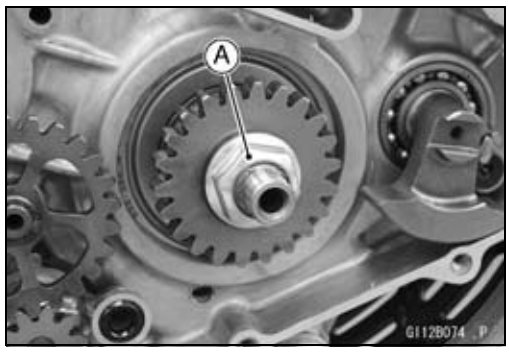

- Remove:
  Primary Gear Nut [A]
  Washer
  Primary Gear
  Spacer

○The primary gear nut is left-hand threads.

Primary Gear Installation

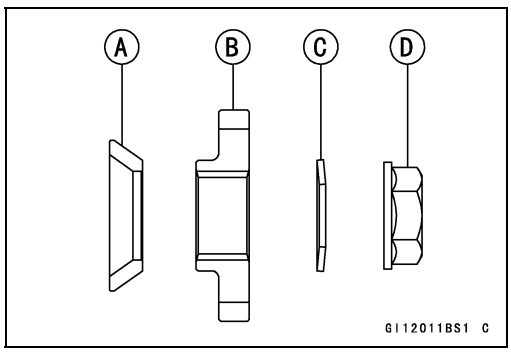

- Install the following parts as shown.
  Spacer [A]
  Primary Gear [B]
  Washer [C]
  Primary Gear Nut [D]

○The primary gear nut is left-hand threads.

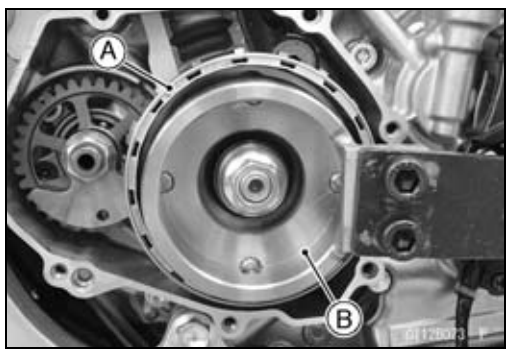

- Hold the flywheel [A] steady with the rotor holder [B].

Special Tools - Grip: 57001-1591
Rotor Holder: 57001-1730

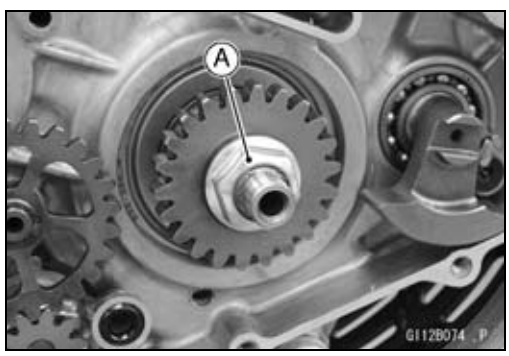

- Tighten:

Torque - Primary Gear Nut [A]: 100 N·m (10.2 kgf·m, 73.8 ft·lb)

○The primary gear nut is left-hand threads.

- Install the removed parts (see appropriate chapters).

External Shift Mechanism

Shift Pedal Removal

- Remove:
  Shift Pedal Bolt [A]
  Shift Pedal [B]

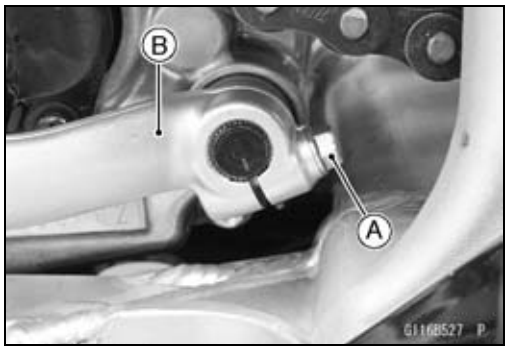

Shift Pedal Installation

- Install the shift pedal so that the slit [A] on the pedal aligns with the line mark [B] on the shift shaft.
- Tighten:

  Torque - Shift Pedal Bolt: 10 N·m (1.0 kgf·m, 89 in·lb)

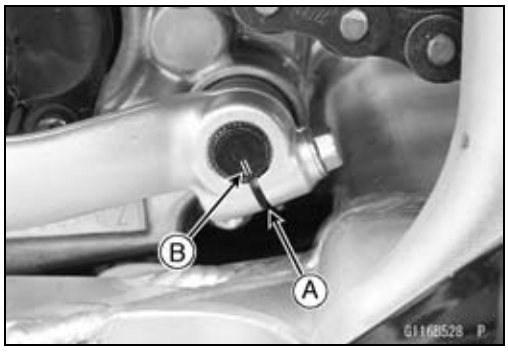

External Shift Mechanism Removal

- Remove:
  Right Engine Cover (see Right Engine Cover Removal in the Clutch chapter)
  Clutch (see Clutch Removal in the Clutch chapter)
  Shift Pedal (see Shift Pedal Removal)
  Oil Pump Idle Gear (see Oil Pump Removal in the Engine Lubrication System chapter)
- Pull out the shift shaft [A].

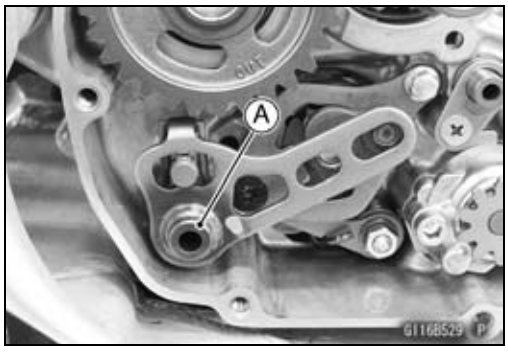

- Remove:
  Collar [A]
  Ratchet Plate Bolt [B]
  Ratchet Plate Screw [C]
- While compressing the pawls [D], take off the shift ratchet assembly [E] with ratchet plate [F].

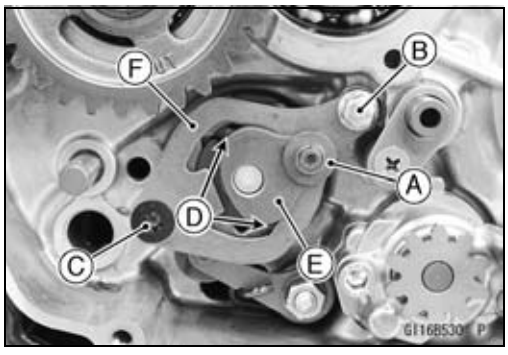

- Remove the shift drum cam bolt [A].
- Push down the gear positioning lever [B] with the flat tip screw driver [C], and remove the shift drum cam [D] and pin.

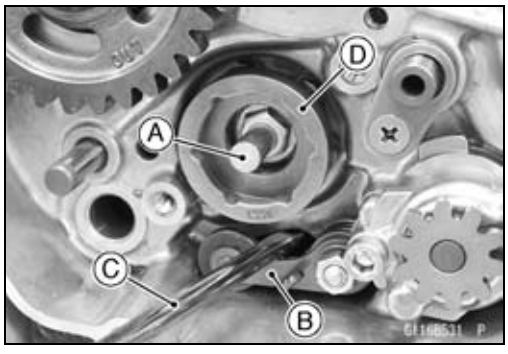

External Shift Mechanism

- Remove:
  Gear Position Lever Nut [A] and Washer [B]
  Gear Position Lever [C]
  Collar
  Spring

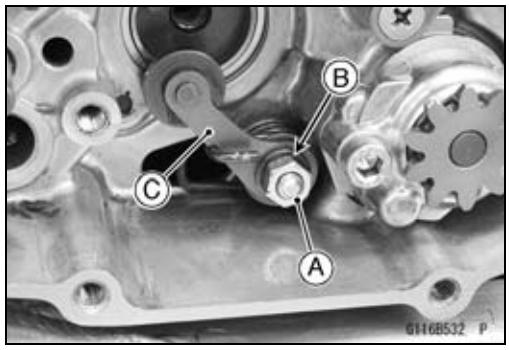

External Shift Mechanism Installation

- Install the spring [A], collar [B] and gear positioning lever [C].

○Fit each end of the spring to the original positions.

- Install the washer [D].
- Tighten:

Torque - Gear Positioning Lever Nut [E]: 9.0 N·m (0.92 kgf·m, 80 in·lb)

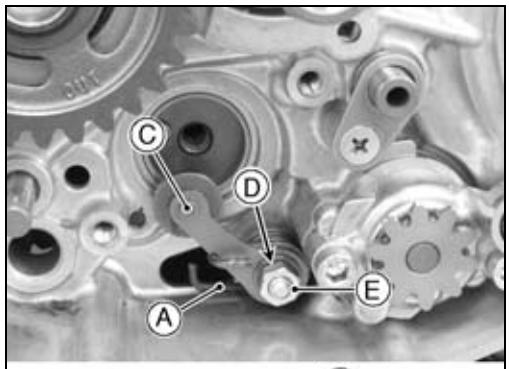

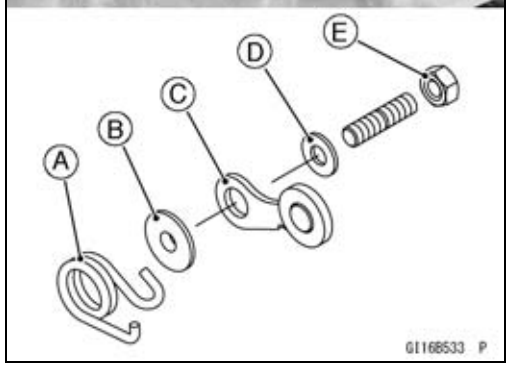

- Push down the gear positioning lever [A] with the flat tip screw driver [B] and install the pin [C] and shift drum cam [D].

○Fit the groove [E] on the pin.

- Apply a non-permanent locking agent to the threads of the shift drum cam bolt.
- Tighten:

Torque - Shift Drum Cam Bolt: 24 N·m (2.4 kgf·m, 18 ft·lb)

- Align the roller of the gear positioning lever with the slot [F] of the shift drum cam.

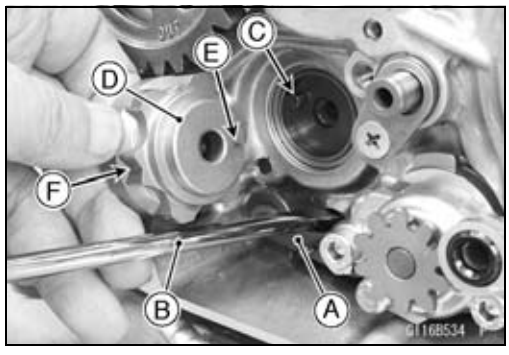

- Set up the shift ratchet assembly as shown.
  Ratchet [A]
  Pawls [B]
  Pins [C]
  Springs [D]

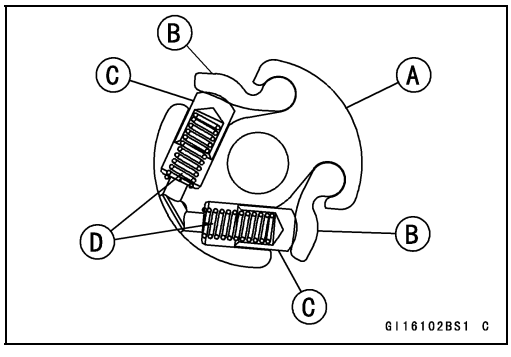

External Shift Mechanism

- Install the shift ratchet assembly [A] to the ratchet plate [B] as shown.

○While compressing the pawls, install the shift ratchet assembly to the ratchet plate.

- Apply a non-permanent locking agent to the threads of the ratchet plate screw [C].
- Tighten the ratchet plate screw first, and then the ratchet plate bolt [D].

Torque - Ratchet Plate Screw: 15 N·m (1.5 kgf·m, 11 ft·lb)
Ratchet Plate Bolt: 10 N·m (1.0 kgf·m, 89 in·lb)

- Install the collar [E].

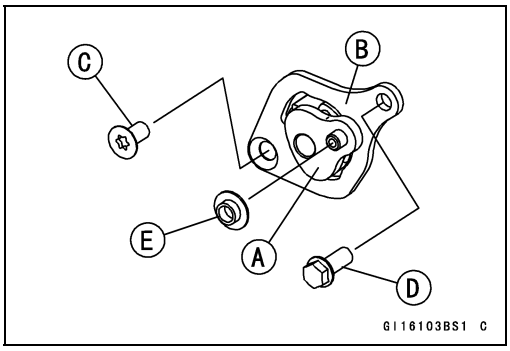

- Before installing the shift shaft, apply grease to the oil seal lips and shift shaft splines.
- Insert the shift shaft [A].

○Take care not to damage the oil seal when inserting the shift shaft.

- Install the removed parts (see appropriate chapters).

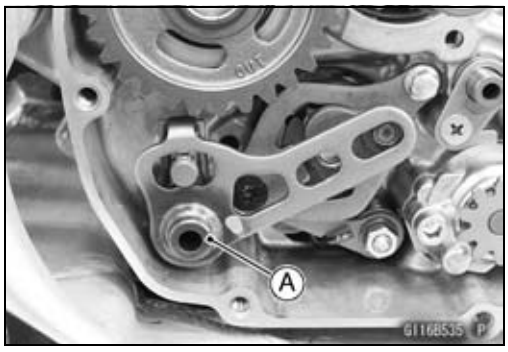

External Shift Mechanism Inspection

- Remove the shift shaft (see External Shift Mechanism Removal).
- Check the shift shaft [A] for bending or damage to the splines.

★If the shaft is bent, straighten or replace it. If the splines are damaged, replace the shift shaft.

- Check the return spring [B] for cracks or distortion.

★If the spring is damaged in any way, replace it.

- Check the shift lever [C] for distortion.

★If the shift lever is damaged in any way, replace the shift shaft.

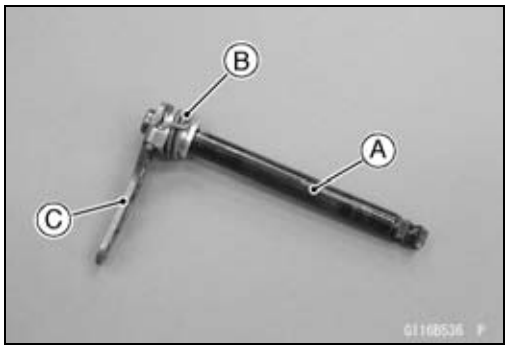

- Check the shift ratchet assembly for any damage.

★If the ratchet [A], pawls [B], pins [C] or springs [D] are damaged in any way, replace them.

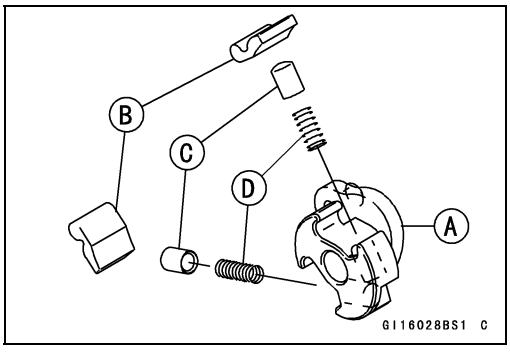

External Shift Mechanism

- Visually inspect the shift drum cam [A].

★If it is badly worn or if it shows any damage, replace it.

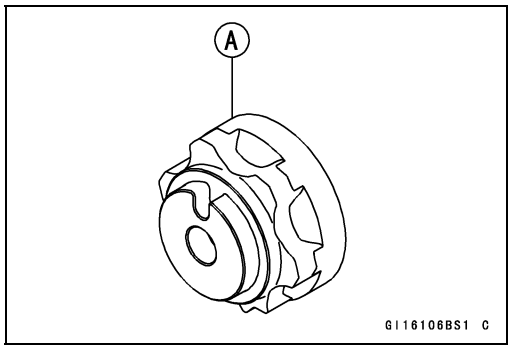

- Check the gear positioning lever [A] and its spring [B] for breaks or distortion.

★If the lever or spring is damaged in any way, replace them.

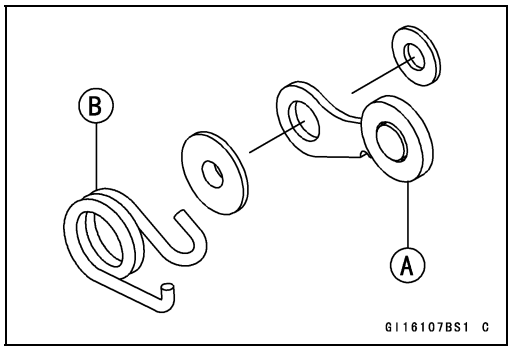

Kickstarter

Kick Pedal Assy Removal

- Remove:
  Kick Pedal Bolt [A] and Washer
  Kick Pedal Assy [B]

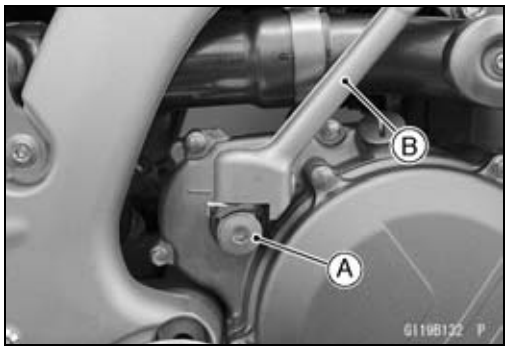

Kick Pedal Assy Installation

- Install the kick pedal assy.

○Fit the flat portion [A] of the pedal to the line mark [B] on the clutch cover as shown.

- Apply a non-permanent locking agent to the threads of the kick pedal bolt.
- Install the washer, and tighten the kick pedal bolt.

Torque - Kick Pedal Bolt: 35 N·m (3.6 kgf·m, 26 ft·lb)

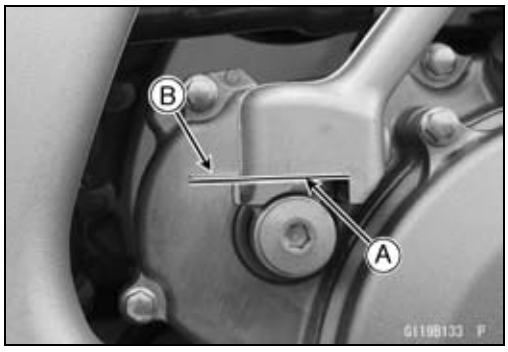

Kick Pedal Assy Disassembly

- Remove the kick pedal assy (see Kick Pedal Assy Removal).
- Remove:
  Plug Screw [A]
  Spring [B]
  Steel Ball [C]
  Detent Screw [D]
  Boss [E]
  Oil Seal [F]

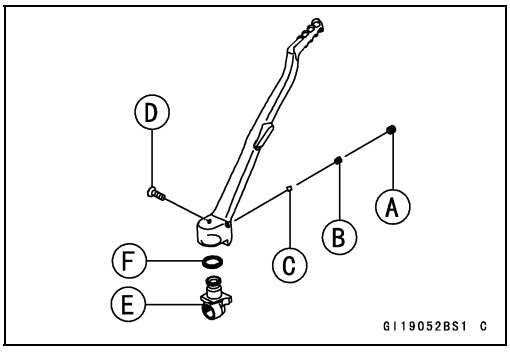

Kick Pedal Assy Assembly

- Replace the oil seal [A] and plug screw [B].
- Apply grease to the steel ball, oil seal lip, spring, and the sliding portion of the pedal.
- Install:
  Oil Seal
  Boss [C]
  Detent Screw [D]
  Steel Ball [E]
  Spring [F]
  Plug Screw
- Tighten the detent screw and plug screw.
- After tightening the two screws, stake the plug screw with a punch.

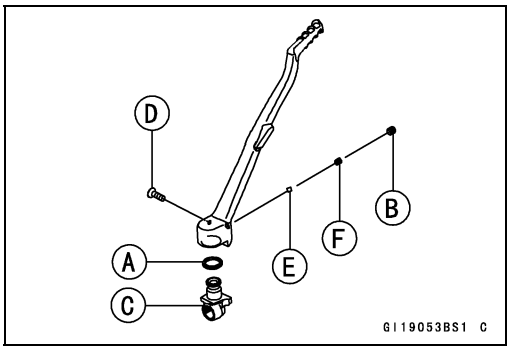

Kickstarter

Idle Gear Removal

- Remove:
  Right Engine Cover (see Right Engine Cover Removal in the Clutch chapter)
  Clutch (see Clutch Removal in the Clutch chapter)
  Circlip [A]
  Idle Gear [B]

Special Tool - Outside Circlip Pliers: 57001-144

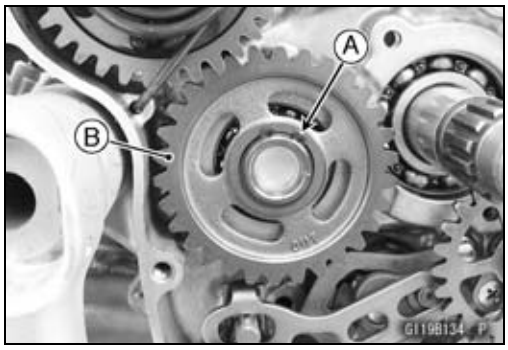

Idle Gear Installation

- Make sure to position the circlip [A] in original position. Replace it, if removed.
- Apply molybdenum disulfide oil to the inside [B] of the idle gear.

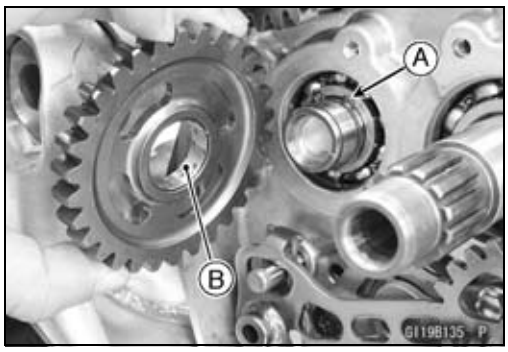

- Replace the circlip [A] with a new one.
- Install the idle gear [B] so that the “OUT” mark [C] faces outward.
- Install the circlip.

Special Tool - Outside Circlip Pliers: 57001-144

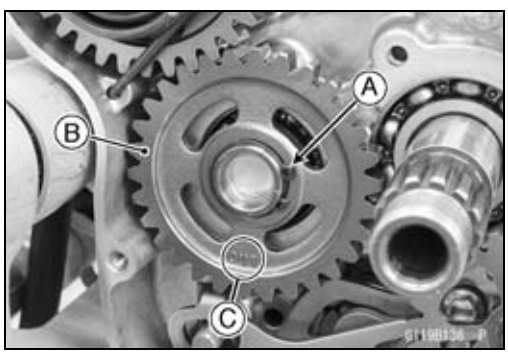

Kickshaft Removal

- Remove:
  Right Engine Cover (see Right Engine Cover Removal in the Clutch chapter)
  Clutch (see Clutch Removal in the Clutch chapter)
- Pull the end [A] of the kick spring [B] out of the hole in the crankcase.
- Turn the kickshaft counterclockwise [C] and pull out the kickstarter assembly [D].

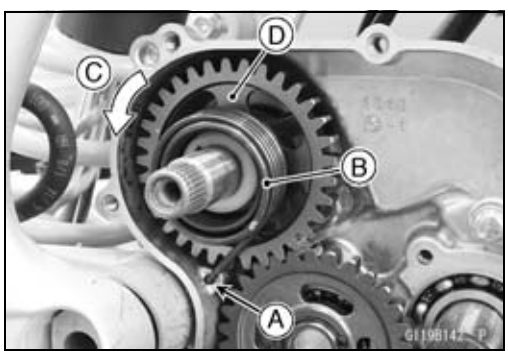

- Remove the bolt [A], and take off the ratchet guide [B].

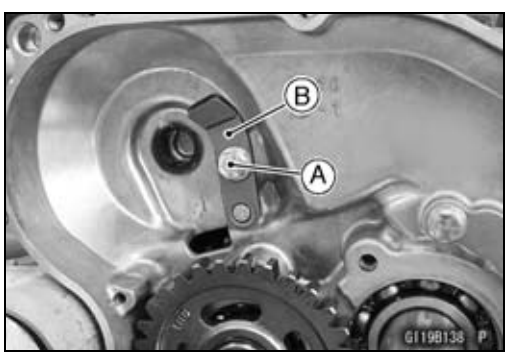

Kickstarter

Kickshaft Installation

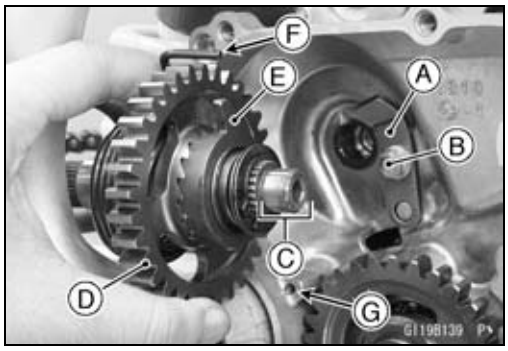

- Install the ratchet guide [A] and the tighten the ratchet guide bolt [B].

  Torque - Ratchet Guide Bolt: 9.0 N·m (0.92 kgf·m, 80 in·lb)
- Apply molybdenum disulfide grease to the end [C] of the kick shaft.
- Insert the kick shaft assembly [D] into the crankcase.

○Securely engage the stopper portion [E] of the ratchet gear with the guide.

- Insert the spring end [F] into the hole [G].
- Install the removed parts (see appropriate chapters).

Kick Shaft Assembly Disassembly/Assembly

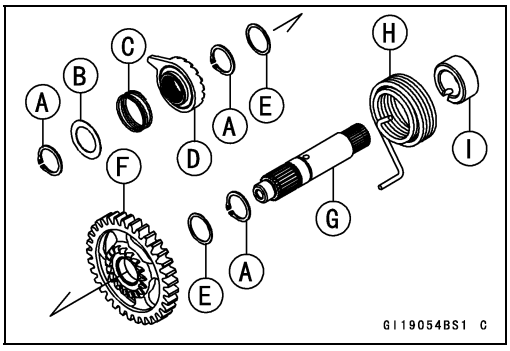

- The kick shaft assembly consists of the following parts.
  Circlips [A]
  Washer (ϕ24 × ϕ18.3) [B]
  Spring [C]
  Ratchet Gear [D]
  Washer (ϕ22 × ϕ18.3) [E]
  Kick Gear [F]
  Kick Shaft [G]
  Kick Spring [H]
  Spring Guide [I]
- Check the kick shaft assembly parts for damage. Any damaged parts should be replaced with new ones.

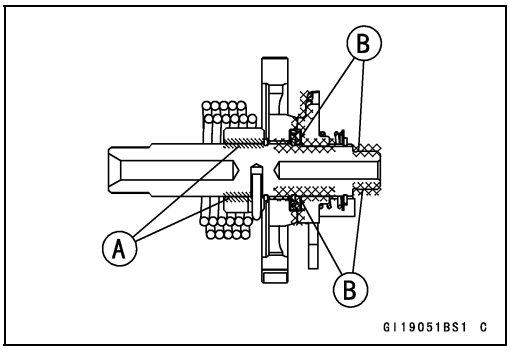

- Apply grease [A] and molybdenum disulfide grease [B] to the kick gear, ratchet gear and kick shaft.
- Replace the circlips that were removed with new ones.

  Special Tool - Outside Circlip Pliers: 57001-144

NOTE

○*When assembling the ratchet gear [A] onto the kick shaft [B], align the punch mark [C] on the ratchet gear with the punch mark [D] on the kick shaft.*

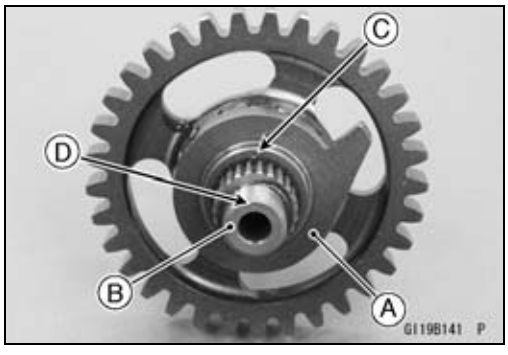

Kickstarter

- Apply grease to the inside of the spring guide [A].
- Fit the spring end [B] and hollow [C] on the spring guide.

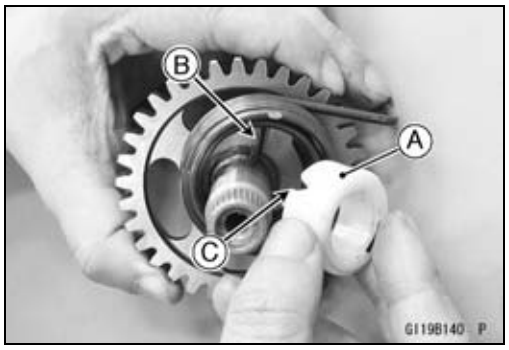

Bearings/Oil Seals

Bearing Replacement

NOTICE
Do not remove the ball or needle bearings unless it is necessary. Removal may damage them.

- Using a press or puller, remove the ball bearing and/or needle bearings.

NOTE

○*In the absence of the above mentioned tools, satisfactory results may be obtained by heating the case to approximately 93°C (200°F) max, and tapping the bearing in or out*

NOTICE
Do not heat the case with a torch. This will warp the case. Soak the case in oil and heat the oil.

- Using a press and the bearing driver set [A], install the new ball bearing until it stops at the bottom of its housing.

○The new needle bearings must be pressed into the crankcase so that the end is flush with the end of the hole.

Special Tool - Bearing Driver Set: 57001-1129

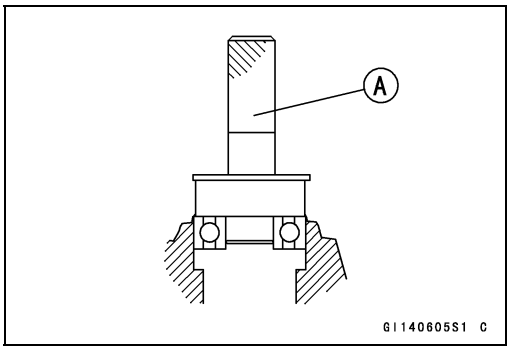

Bearing Wear Inspection

NOTICE
Do not remove the bearings for inspection. Removal may damage them.

- Check the ball bearings.

○Since the ball bearings are made to extremely close tolerances, the wear must be judged by feel rather than measurement. Clean each bearing in a high flash-point solvent, dry it (do not spin the bearing while it is dry), and oil it with engine oil to it.

○Spin [A] the bearing by hand to check its condition.

★If the bearing is noisy, does not spin smoothly, or has any rough spots, replace it.

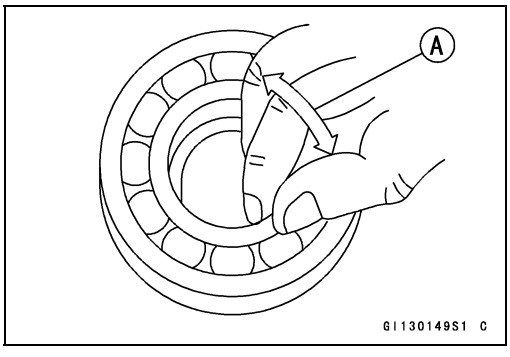

Bearings/Oil Seals

● Inspect the needle bearings.

○The rollers in a needle bearing normally wear very little, and wear is difficult to measure. Instead of measuring, inspect the bearing for abrasion, color change, or other damage.

★If there is any doubt as to the condition of a needle bearing, replace it.

Oil Seal Inspection

● Inspect the oil seals.

★Replace the oil seal if the lips are deformed, discolored (indicating that the rubber has deteriorated), hardened or otherwise damaged.

Wheels/Tires

Table of Contents

Exploded View 10-2
Specifications 10-4
Special Tools 10-5
Wheels (Rims) 10-6
- Front Wheel Removal 10-6
- Front Wheel Installation 10-6
- Rear Wheel Removal 10-7
- Rear Wheel Installation 10-8
- Wheels Inspection 10-9
- Spoke Tightness Inspection 10-10
- Rim Runout Inspection 10-10
- Rim Installation Position 10-10
- Axle Inspection 10-10

Tires 10-11
- Air Pressure Inspection/Adjustment 10-11
- Tire Removal 10-11
- Tire Installation 10-12

Hub Bearing 10-14
- Front Hub Bearing Removal 10-14
- Rear Hub Bearing Removal 10-14
- Hub Bearing Installation 10-15
- Hub Bearing Inspection 10-16
- Hub Bearing Lubrication 10-16

Exploded View

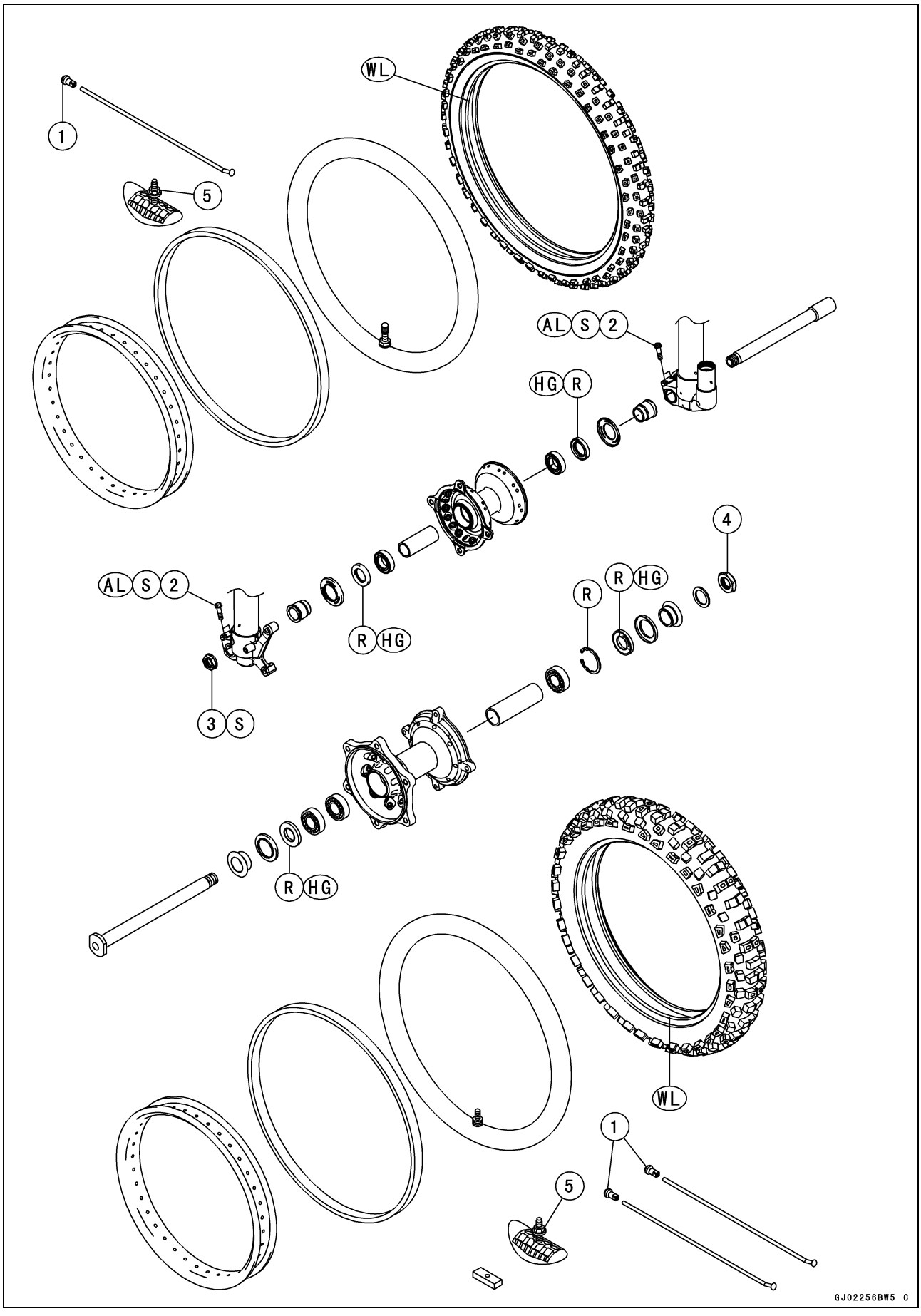

Exploded View

No.	Fastener	Torque			Remarks
		N·m	kgf·m	ft·lb	
1	Spoke Nipples	3.9	0.40	35 in·lb	
2	Front Axle Clamp Bolts	23	2.3	17	AL, S
3	Front Axle Nut	80	8.2	59	S
4	Rear Axle Nut	110	11.2	81.1	
5	Bead Protector Nut	6.0	0.61	53 in·lb	

AL: Tighten the two clamp bolts alternately two times to ensure even tightening torque.
HG: Apply high-temperature grease.
R: Replacement Parts
S: Follow the specified tightening sequence.
WL: Apply soap and water solution or rubber lubricant.

Specifications

Item	Standard	Service Limit
Wheels (Rims)		
Rim Size:		
Front	21 × 1.60	– – –
Rear	19 × 2.15	– – –
Rim Runout:		
Axial	TIR 1.0 mm (0.04 in.) or less	TIR 2.0 mm (0.08 in.)
Radial	TIR 1.0 mm (0.04 in.) or less	TIR 2.0 mm (0.08 in.)
Axle Runout/100 mm (3.94 in.)	TIR 0.03 mm (0.001 in.) or less	TIR 0.2 mm (0.008 in.)
Tires		
Air Pressure (when cold):		
Front/Rear	100 kPa (1.02 kgf/cm², 14.5 psi)	– – –
Standard Tire:		
Front:		
Size	80/100-21 51M	– – –
Make	BRIDGESTONE	– – –
Type	M403, Tube	– – –
Rear:		
Size	120/80-19 63M	– – –
Make	BRIDGESTONE	– – –
Type	M404, Tube	– – –

Special Tools

Inside Circlip Pliers:
57001-143

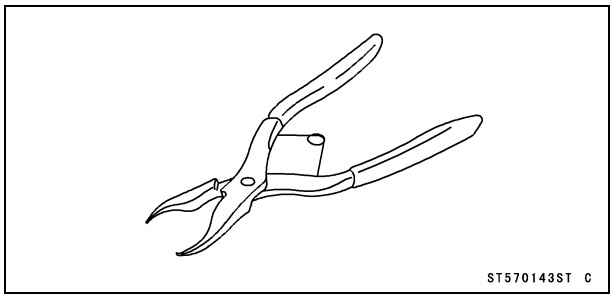

Rim Protector:
57001-1063

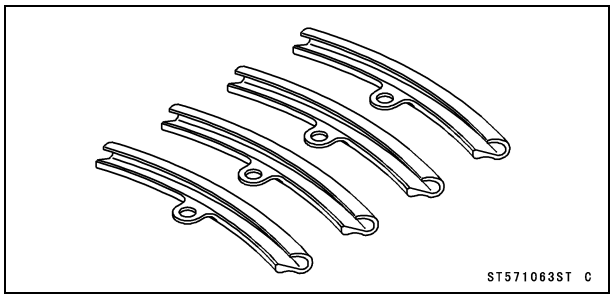

Bearing Driver Set:
57001-1129

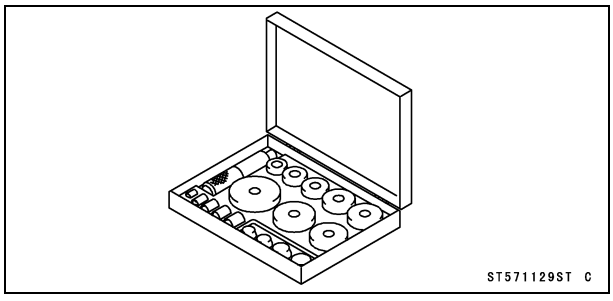

Jack:
57001-1238

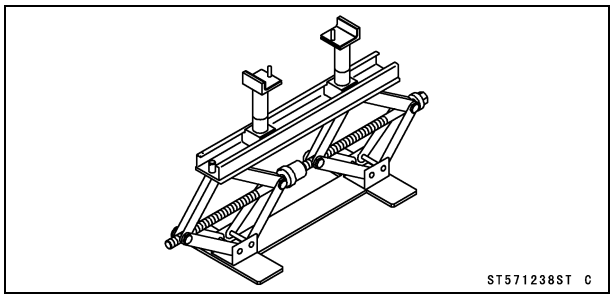

Bearing Remover Head, ϕ20 × ϕ22:
57001-1293

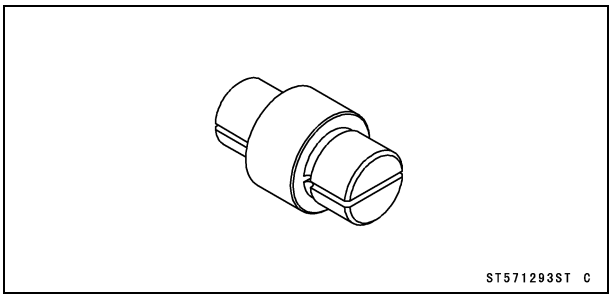

Bearing Remover Head, ϕ25 × ϕ28:
57001-1346

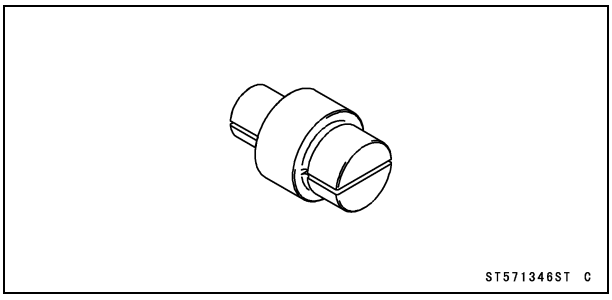

Bearing Remover Shaft, ϕ13:
57001-1377

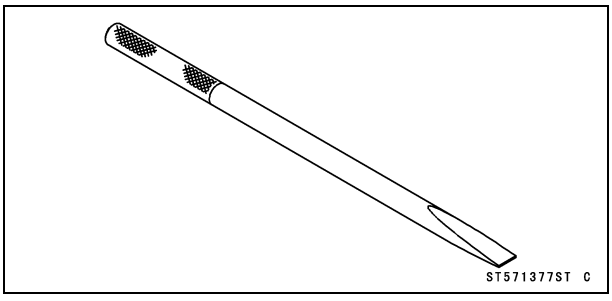

Jack Attachment:
57001-1608

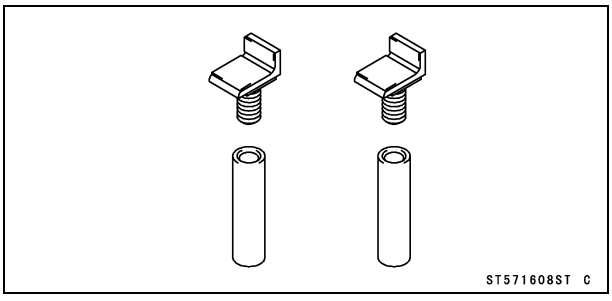

Wheels (Rims)

Front Wheel Removal

- Remove the axle nut [A].
- Loosen the axle clamp bolts [B] on both sides.
- Raise the front wheel off the ground with jack.

Special Tools - Jack: 57001-1238
Jack Attachment: 57001-1608

- Pull out the axle and remove the wheel.

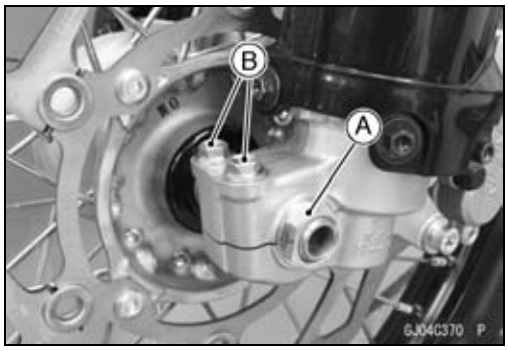

- Remove the collars [A] with caps [B] on both sides.

NOTICE
Do not lay the wheel on the ground with the disc facing down. This can damage or warp the disc. Place blocks under the wheel so the disc does not touch the ground.

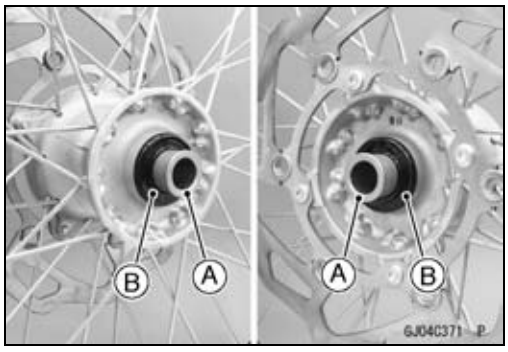

- Insert a wood wedge between the brake pads.

○This prevents them from being moved out of their proper position, should the brake lever be squeezed accidentally.

Front Wheel Installation

- Apply high-temperature grease to the grease seal lips.
- Install the caps and collars to the hub on both sides.

○Fit the projection [A] and groove [B].

- Install the front wheel.

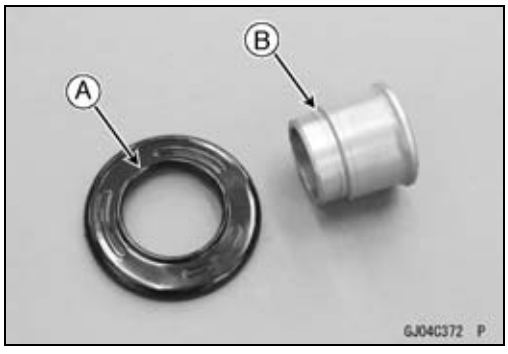

- Apply a thin coat of high-temperature grease [A] to the front axle [B] for rust prevention.
  About 10 mm (0.4 in.) [C]
  About 70 mm (2.8 in.) [D]

NOTE

○*Do not apply grease to the threads of the axle.*

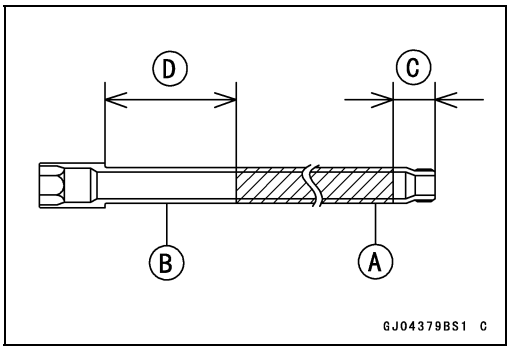

Wheels (Rims)

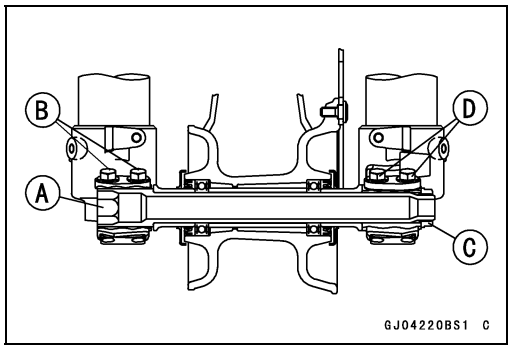

- Insert the axle [A] from right side.
- Screw the front axle clamp bolts (right) [B] temporarily.
- Install the front axle nut [C] with the flange side facing inward.
- Tighten:

Torque - Front Axle Nut: 80 N·m (8.2 kgf·m, 59 ft·lb)
Front Axle Clamp Bolts (Left) [D]: 23 N·m (2.3 kgf·m, 17 ft·lb)

NOTE

○*Tighten the two clamp bolts alternately two times to ensure even tightening torque.*

- Loosen the front axle clamp bolts (right).
- Remove the jack.

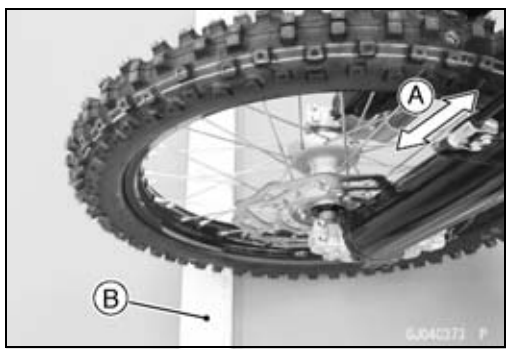

- Pump the front fork up and down [A] 4 or 5 times to align both fork positions.

NOTE

○*Put a block [B] in front of the wheel to stop moving.*
○*Do not apply the front brake.*

- Tighten:

Torque - Front Axle Clamp Bolts (Right): 23 N·m (2.3 kgf·m, 17 ft·lb)

NOTE

○*Tighten the two clamp bolts alternately two times to ensure even tightening torque.*

- Check the front brake for good braking power and no brake drag.

⚠ WARNING

After servicing, it takes several applications of the brake lever before the brake pads contact the disc, which could result in increased stopping distance and cause an accident resulting in injury or death. Do not attempt to ride the motorcycle until a firm brake lever is obtained by pumping the lever until the pads are against the disc.

Rear Wheel Removal

- Using the jack under the frame so that the rear wheel is raised off the ground.

Special Tools - Jack: 57001-1238
Jack Attachment: 57001-1608

Wheels (Rims)

- Squeeze the front brake lever, and hold it with a band [A] to prevent the motorcycle from running forward.

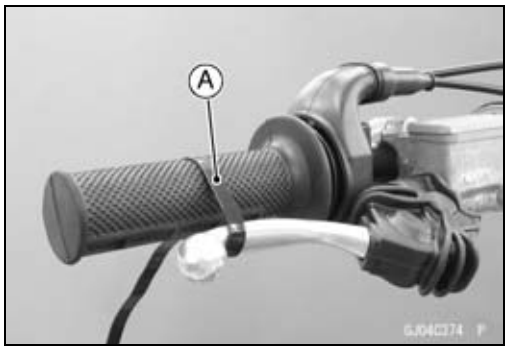

⚠ WARNING

Motorcycle may fall over unexpectedly resulting in an accident or injury. Be sure to hold the front brake when removing the rear wheel.

NOTICE

Be sure to hold the front brake when removing the rear wheel, or the motorcycle may fall over. The rear wheel or the motorcycle could be damaged.

- Remove:
  Drive Chain (see Drive Chain Removal in the Final Drive chapter)
  Rear Brake Disc Guard Bolts [A] and Washers
  Rear Brake Disc Guard [B]
  Rear Axle Nut [C]
- Pull out the axle, and remove the chain adjuster on both sides.
- Remove the rear wheel.

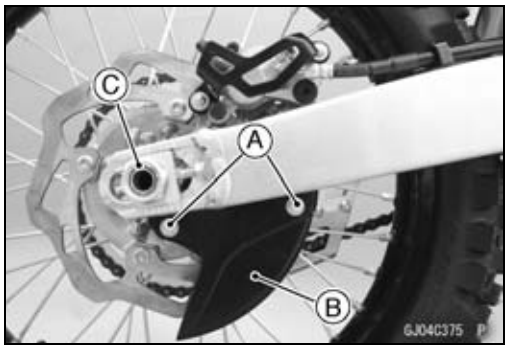

- Remove the collars [A] with caps [B] on both sides.

NOTICE

Do not lay the wheel on the ground with the disc facing down. This can damage or warp the disc. Place blocks under the wheel so the disc does not touch the ground.

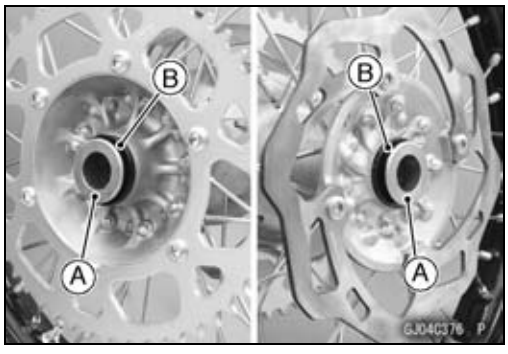

- Insert a wood wedge between the brake pads.
  ○This prevents them from being moved out of their proper position, should the brake pedal be squeezed accidentally.

Rear Wheel Installation

- Fit the groove [A] of the caliper holder and swingarm rib [B].

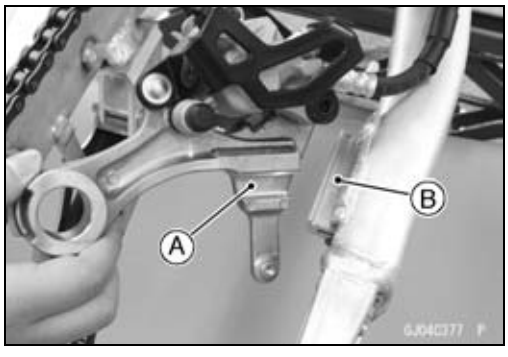

Wheels (Rims)

- Apply high-temperature grease to the oil seal lips.
- Install the caps and collars to the hub on both sides.

○Fit the projection [A] and groove [B].

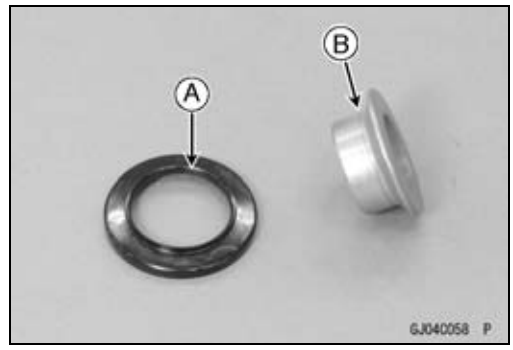

- Install the rear wheel.
- Install the chain adjusters on the swingarm as shown in the figure.
  Adjuster [A] (Left Side)
  Flat Adjuster [B] (Right Side)
- Inspect the rear axle nut (see Rear Axle Nut Inspection in the Periodic Maintenance chapter).

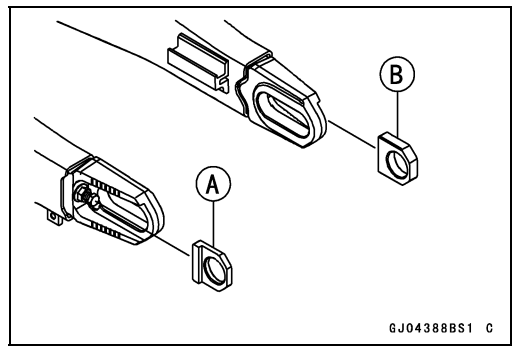

- Apply a thin coat of high-temperature grease [A] to the rear axle [B] for rust prevention.
  About 10 mm (0.4 in.) [C]
  About 70 mm (2.8 in.) [D]

NOTE

○*Do not apply grease to the threads of the axle.*

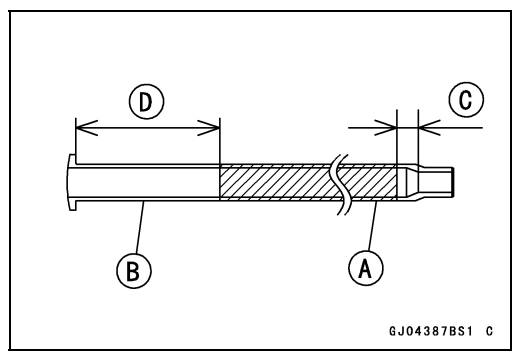

- Insert the axle from left side, and temporarily tighten the axle nut.
- Install the drive chain (see Drive Chain Installation in the Final Drive chapter).
- Tighten:

Torque - Rear Axle Nut: 110 N·m (11.2 kgf·m, 81.1 ft·lb)

- Install the rear brake disc guard and tighten the rear brake disc guard bolts.

Torque - Rear Brake Disc Guard Bolts: 7.0 N·m (0.71 kgf·m, 53 in·lb)

- Check the rear brake for good braking power and no brake drag.

⚠ WARNING

After servicing, it takes several applications of the brake pedal before the brake pads contact the disc, which could result in increased stopping distance and cause an accident resulting in injury or death. Do not attempt to ride the motorcycle until a firm brake pedal is obtained by pumping the pedal until the pads are against the disc.

Wheels Inspection

- Refer to the Wheel Bearing Inspection in the Periodic Maintenance chapter.

Wheels (Rims)

Spoke Tightness Inspection

- Refer to the Spoke Tightness Inspection in the Periodic Maintenance chapter.

Rim Runout Inspection

- Refer to the Rim Runout Inspection in the Periodic Maintenance chapter.

Rim Installation Position

- When installing the rim, set the rim following position.

○The distance [A] from the brake disc seating surface [B] of the front hub [C] to left end of the front rim [D] should be as follows.
View from Front [E]
Distance: 26.5 ±0.5 mm (1.04 ±0.020 in.)

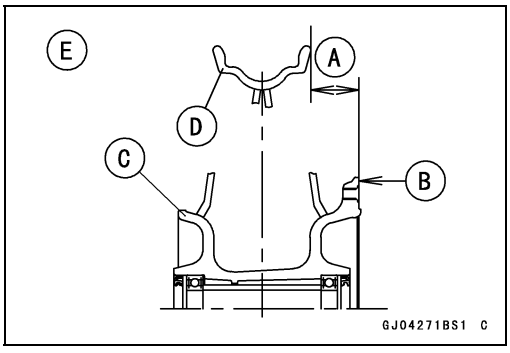

○The distance [A] from the brake disc seating surface [B] of the rear hub [C] to right end of the rear rim [D] should be as follows.
View from Rear [E]
Distance: 28.5 ±0.5 mm (1.12 ±0.020 in.)

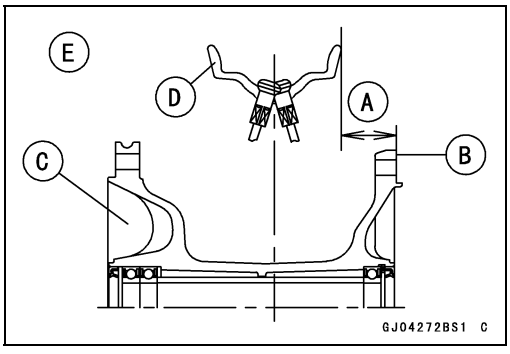

- Check the rim runout (see Rim Runout Inspection in the Periodic Maintenance chapter).

Axle Inspection

- Visually inspect the front and rear axle for damages.

★If the axle is damaged or bent, replace it.

- Place the axle on V blocks that are 100 mm (3.94 in.) [A] apart, and set a dial gauge [B] on the axle at a point halfway between the blocks.
- Turn [C] the axle to measure the runout.

○The difference between the highest and lowest dial readings is the amount of runout.

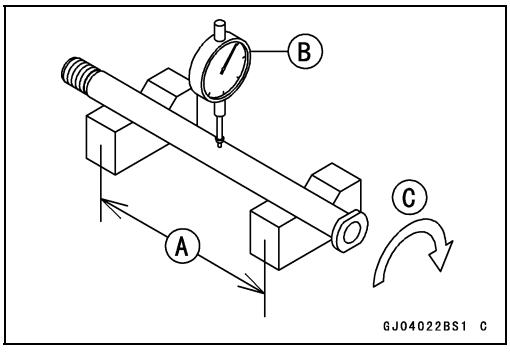

Axle Runout/100 mm (3.94 in.)

Standard:	**TIR 0.03 mm (0.001 in.) or less**
Service Limit:	**TIR 0.2 mm (0.008 in.)**

★If the runout exceeds the service limit, replace the axle.

Tires

Air Pressure Inspection/Adjustment

- Refer to the Air Pressure Inspection/Adjustment in the Periodic Maintenance chapter.

Tire Removal

- Remove the wheel (see Front/Rear Wheel Removal).

NOTICE
Do not lay the front wheel on the ground with the disc facing down. This can damage or warp the disc. Place blocks under the wheel so that the disc does not touch the ground.

- To maintain wheel balance, mark [A] the air valve position on the tire with chalk so that the tire can be reinstalled in the same position.
  Align [B]
- Remove the air valve cap [C].

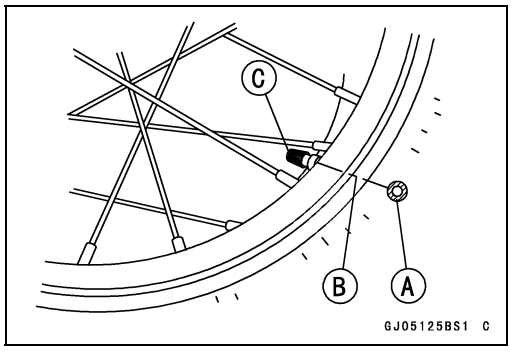

- Take out the valve core [A] to let out the air.
- Remove the air valve nut.

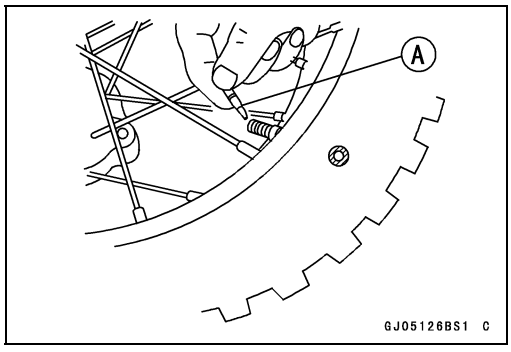

- Loosen the bead protector nut [A].
- Lubricate the tire beads and rim flanges on both sides with a soap and water solution or rubber lubricant. This helps the tire beads slip off the rim flanges.

NOTICE
Never lubricate with engine oil or petroleum distillates because they will deteriorate the tire.

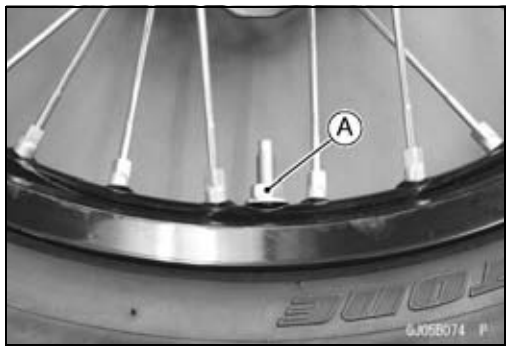

- Break the beads away from both sides of the rim with a suitable bead breaker.
- Lubricate the suitable tire irons [A] and rim protectors [B] with soap and water solution or rubber lubricant.

Special Tool - Rim Protector: 57001-1063

- Step on the side of the tire opposite air valve, and pry the tire off the rim with the tire irons of the bead breaker protecting the rim with rim protectors.

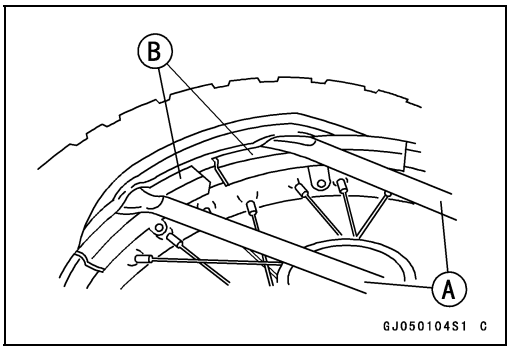

NOTICE
Take care not to insert the tire irons so deeply that the tube gets damaged.

- Remove the tube and bead protector when one side of the tire is pried off.
- Pry the other side of the tire off the rim.

Tire Installation

NOTE

○*The tires should be installed so that the ID serial NO. [A] faces to left side.*

- Inspect the rim and the tire before installing the tire, and replace them if necessary.
- Install the tube band onto the rim.
- Apply a soap and water solution or rubber lubricant to both the tire bead and the rim flange.

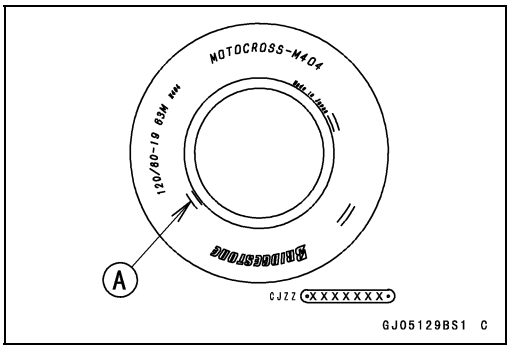

- Position the tire on the rim so that the air valve [A] is at the tire balance mark [B] (the chalk mark made during removal).

○The new tire is no marked.

- Insert the valve stem into the rim, and screw the nut on loosely.
- Fit the rim protectors and use suitable tire irons to install the tire bead.

Special Tool - Rim Protector: 57001-1063

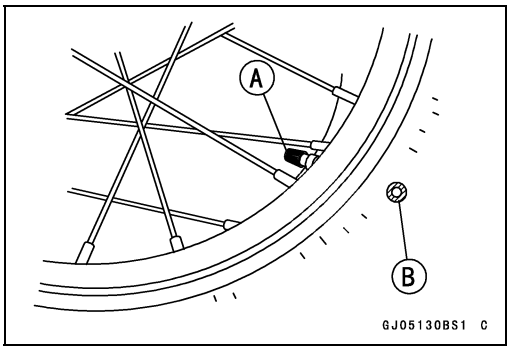

NOTICE
To prevent rim damage, be sure to place the rim protectors at any place the tire irons are applied.

- Install the tire on the rim from the opposite side of the air valve.

○Fit the rim protectors and insert the tire irons so deeply that the tube is not damaged.

- Install the bead protector onto the rim.
- Similarly, slip the tire bead over the rim on the other side.
- Check that the tube is not pinched between the tire and rim.

Tires

- Install the bead protector nut [A] with the flatted side facing inward.
- Tighten the bead protector nut, air valve nut [B] and air valve cap [C].

  Torque - Bead Protector Nut: 6.0 N·m (0.61 kgf·m, 53 in·lb)
- Adjust the tire air pressure to the specified pressure (see Air Pressure Inspection/Adjustment in the Periodic Maintenance chapter).

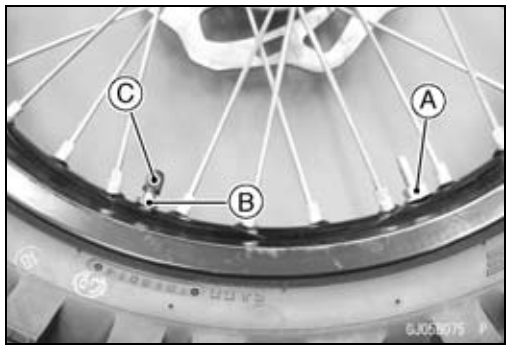

Hub Bearing

Front Hub Bearing Removal

- Remove:
  Front Wheel (see Front Wheel Removal)
  Grease Seals [A]

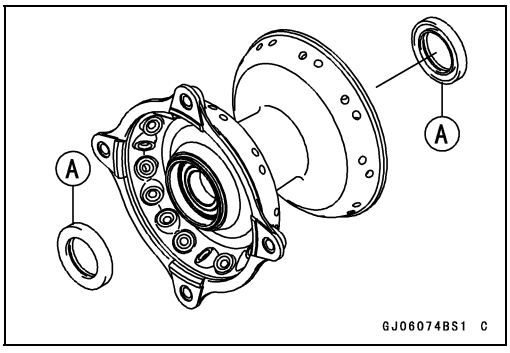

- Use the bearing remover to remove the hub bearings [A].

NOTICE
Do not lay the wheel on the ground with the disc facing down. This can damage or warp the disc. Place wooden blocks under the wheel so that the disc does not touch the ground.

Special Tools - Bearing Remover Head, ϕ20 × ϕ22 [B]: 57001-1293
Bearing Remover Shaft, ϕ13 [C]: 57001-1377

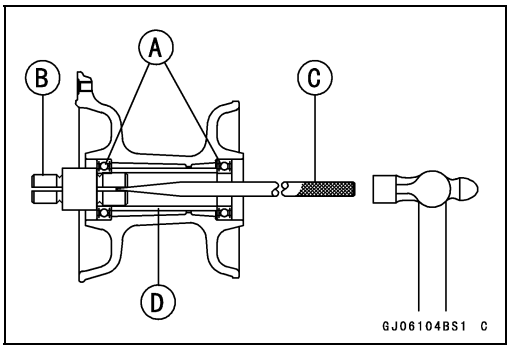

- Remove the collar [D].

Rear Hub Bearing Removal

- Remove
  Rear Wheel (see Rear Wheel Removal)
  Grease Seals [A]
  Circlip [B]

Special Tool - Inside Circlip Pliers: 57001-143

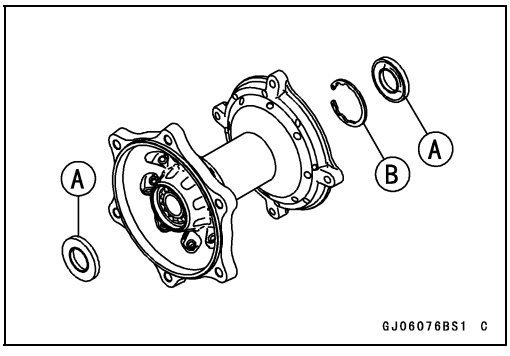

- Use the bearing remover to remove the right hub bearing [A].

NOTICE
Do not lay the wheel on the ground with the disc facing down. This can damage or warp the disc. Place wooden blocks under the wheel so that the disc does not touch the ground.

Special Tools - Bearing Remover Head, ϕ25 × ϕ28 [B]: 57001-1346
Bearing Remover Shaft, ϕ13 [C]: 57001-1377

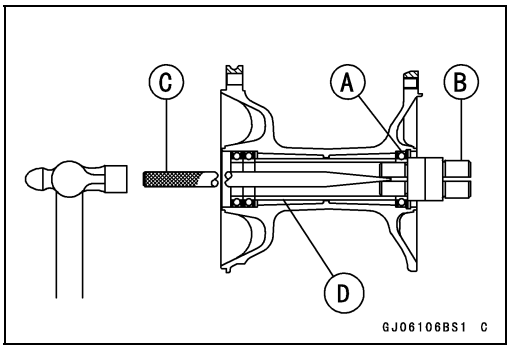

- Remove the collar [D].

Hub Bearing

- Using a suitable bar [A], tap the around of the bearing inner race evenly to remove the bearings [B].

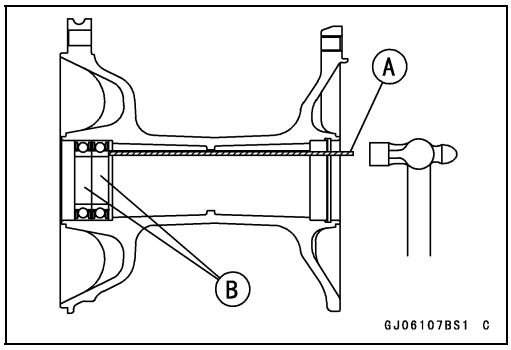

Hub Bearing Installation

- Before installing the hub bearings, blow any dirt or foreign particles out of the hub with compressed air to prevent contamination of the bearings.
- Replace the bearings with new ones.

NOTE

○*Install the bearings so that the marked side or sealed side faces out.*

- Install the front hub bearings in the following sequence.

○Press in the left side bearing [A] until it is bottomed.

Special Tool - Bearing Driver Set: 57001-1129

○Insert the collar [B] in the front hub [C].

○Press in the right side bearing [D] until it is bottomed.

Special Tool - Bearing Driver Set: 57001-1129

- Install the rear hub bearings in the following sequence.

○Press in the right side bearing until it is bottomed.

Special Tool - Bearing Driver Set: 57001-1129

○Insert the collar in the rear hub.

○Press in the left side bearings until it is bottomed.

Special Tool - Bearing Driver Set: 57001-1129

○Replace the circlip with a new one.

Special Tool - Inside Circlip Pliers: 57001-143

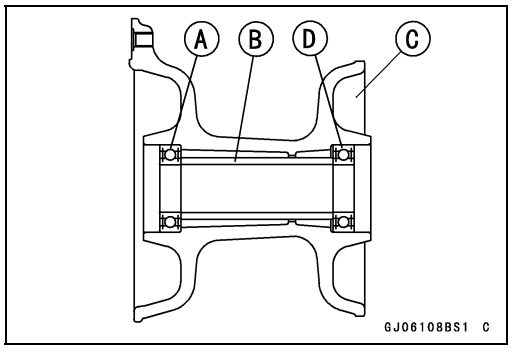

- Replace the grease seal [A] with a new one.
- Press in the grease seal so that the seal surface is flush [B] with the end of the hole.
- Apply high-temperature grease to the grease seal lip.

Special Tool - Bearing Driver Set [C]: 57001-1129

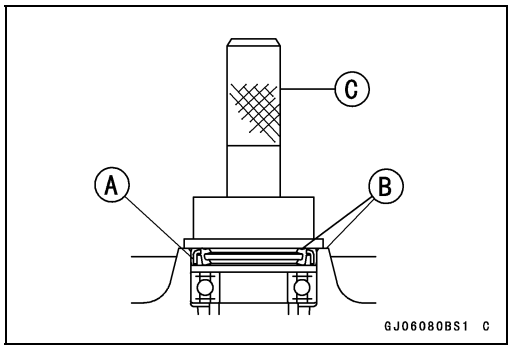

Hub Bearing

Hub Bearing Inspection

Since the hub bearings are made to extremely close tolerances, the clearance can not normally be measured.

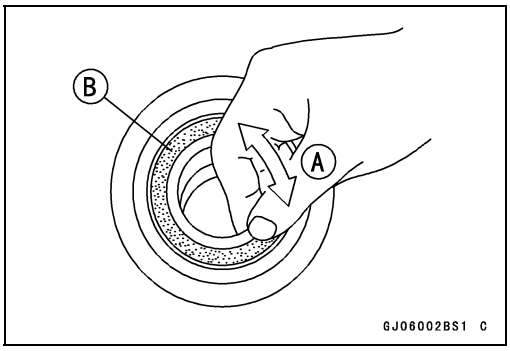

NOTE

○*Do not remove any bearings for inspection. If any bearings are removed, they will need to be replaced with new ones.*

- Turn each bearing in the hub back and forth [A] while checking for plays, roughness, or binding.

★If bearing play roughness, or binding is found, replace the bearing.

- Examine the bearing seal [B] for tears or leakage.

★If the seal is torn or is leaking, replace the bearing.

Hub Bearing Lubrication

NOTE

○*Since the hub bearings are packed with grease and sealed, lubrication is not required.*

Final Drive

Table of Contents

Exploded View 11-2
Specifications 11-4
Drive Chain 11-5
- Drive Chain Slack Inspection 11-5
- Drive Chain Slack Adjustment 11-5
- Wheel Alignment Inspection 11-5
- Wheel Alignment Adjustment 11-5
- Drive Chain Wear Inspection 11-5
- Drive Chain Lubrication 11-5
- Drive Chain Removal 11-5
- Drive Chain Installation 11-5

Sprockets 11-7
- Engine Sprocket Removal 11-7
- Engine Sprocket Installation 11-7
- Rear Sprocket Removal 11-7
- Rear Sprocket Installation 11-8
- Sprocket Wear Inspection 11-8
- Rear Sprocket Warp (Runout) Inspection 11-8

Exploded View

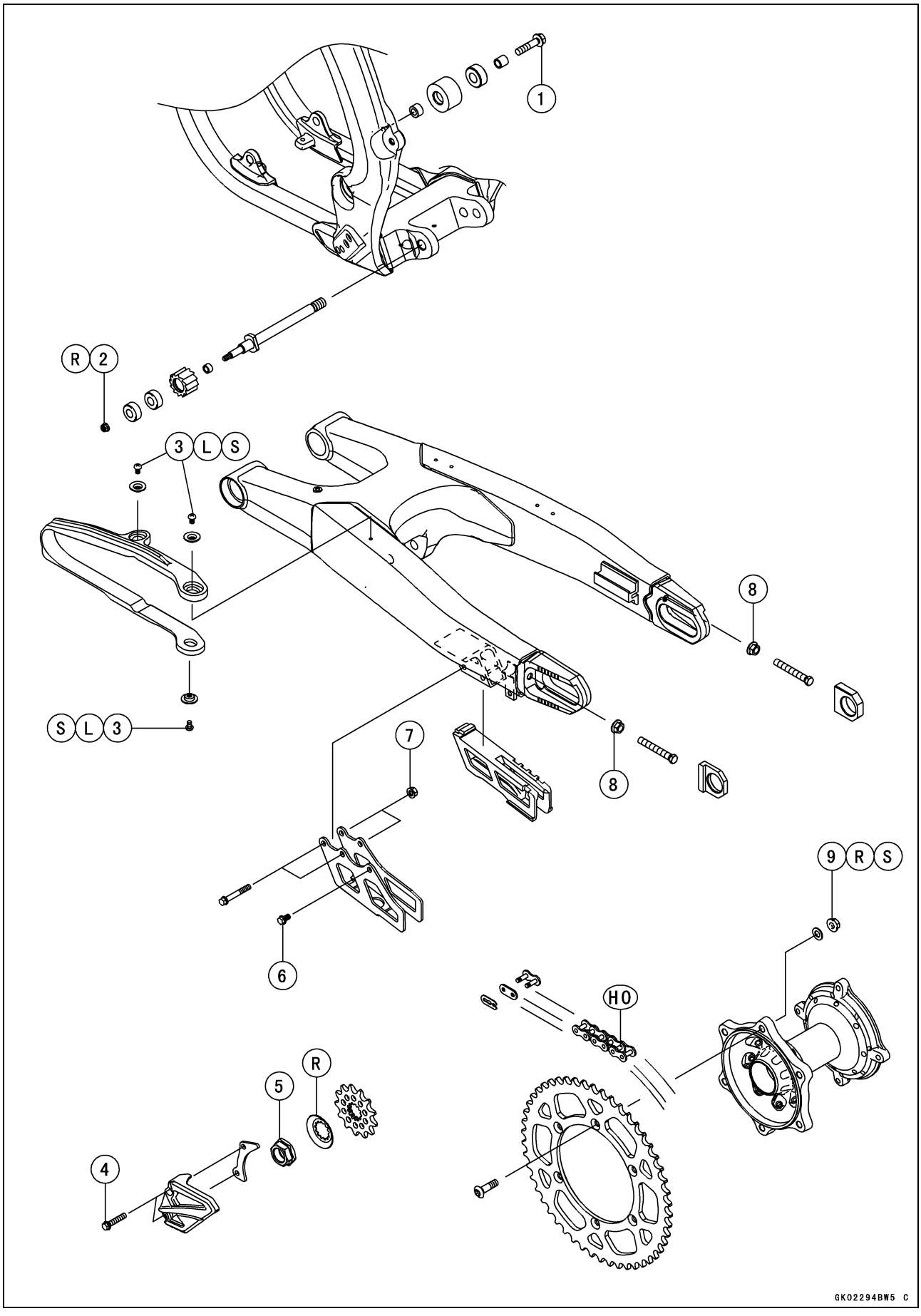

Exploded View

No.	Fastener	Torque			Remarks
		N·m	kgf·m	ft·lb	
1	Upper Chain Guide Roller Bolt	20	2.0	15	
2	Lower Chain Guide Roller Nut	8.0	0.82	71 in·lb	R
3	Chain Slipper Screws	2.5	0.25	22 in·lb	L, S
4	Engine Sprocket Cover Bolts	5.0	0.51	44 in·lb	
5	Engine Sprocket Nut	70	7.1	52	
6	Chain Guide Plate Bolt	8.0	0.82	71 in·lb	
7	Chain Guide Plate Nuts	8.0	0.82	71 in·lb	
8	Chain Adjuster Locknut	15	1.5	11	
9	Rear Sprocket Nuts	35	3.6	26	R, S

HO: Apply heavy oil.
L: Apply a non-permanent locking agent.
R: Replacement Parts
S: Follow the specified tightening sequence.

Specifications

Item	Standard	Service Limit
Drive Chain		
Chain Slack	52 ~ 58 mm (2.0 ~ 2.3 in.)	– – –
Chain 20-link Length	317.5 ~ 318.2 mm (12.50 ~ 12.53 in.)	323 mm (12.7 in.)
Standard Chain:		
Make	DAIDO	– – –
Type	DID 520DMA4	– – –
Link	114 Links	– – –
Sprocket		
Rear Sprocket Warp	TIR 0.4 mm (0.016 in.) or less	TIR 0.5 mm (0.020 in.)

Drive Chain

Drive Chain Slack Inspection

- Refer to the Drive Chain Slack Inspection in the Periodic Maintenance chapter.

Drive Chain Slack Adjustment

- Refer to the Drive Chain Slack Adjustment in the Periodic Maintenance chapter.

Wheel Alignment Inspection

- Check that the notch [A] of the chain adjuster aligns with the same swingarm mark [B] as the other side one.

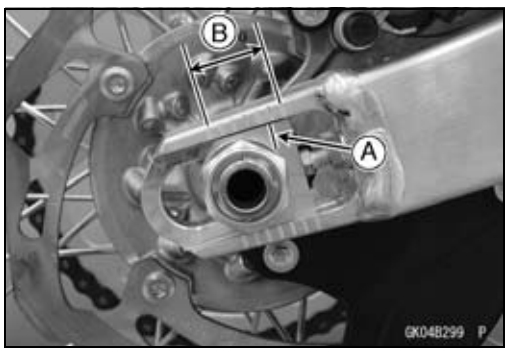

⚠ WARNING

Misalignment of the wheel will result in abnormal wear and may result in an unsafe riding condition. Be sure the wheel is properly aligned.

Wheel Alignment Adjustment

- This procedure is the same as Drive Chain Slack Adjustment (see Drive Chain Slack Adjustment in the Periodic Maintenance chapter).

Drive Chain Wear Inspection

- Refer to the Drive Chain Wear Inspection in the Periodic Maintenance chapter.

Drive Chain Lubrication

- Refer to the Drive Chain Lubrication in the Periodic Maintenance chapter.

Drive Chain Removal

- Remove the engine sprocket cover (see Engine Sprocket Removal).
- Remove the clip [A] from the master link with pliers.
- Remove:
  Link Plate
  Master Link
  Drive Chain

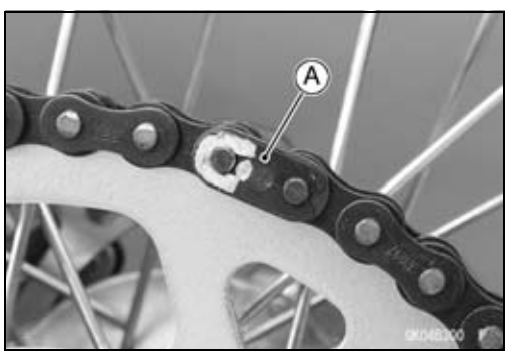

Drive Chain Installation

- Fit the drive chain onto the sprockets.

○Place the drive chain ends on the rear sprocket as shown in the figure.

- Install the master link [A] from the wheel side.

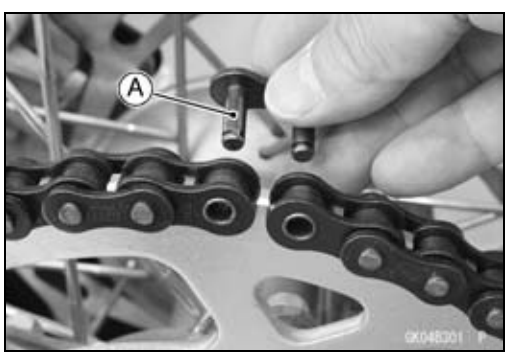

Drive Chain

- Install the link plate [A] so that the mark faces out.
- Install the clip [B] so that the closed end [C] of the “U” pointed in the direction of chain rotation [D].
- Adjust the drive chain slack (see Drive Chain Slack Adjustment in the Periodic Maintenance chapter).

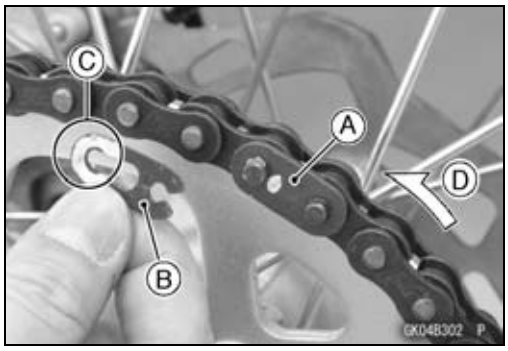

Sprockets

Engine Sprocket Removal

- Remove:
  Engine Sprocket Cover Bolts [A]
  Engine Sprocket Cover [B]
  Drive Chain Guide [C]

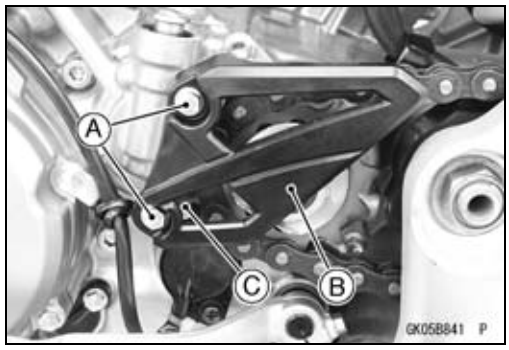

- Flatten the bended sprocket washer [A].
- Remove:
  Engine Sprocket Nut [B]
  Washer
- Remove the engine sprocket [C] from the drive chain [D].

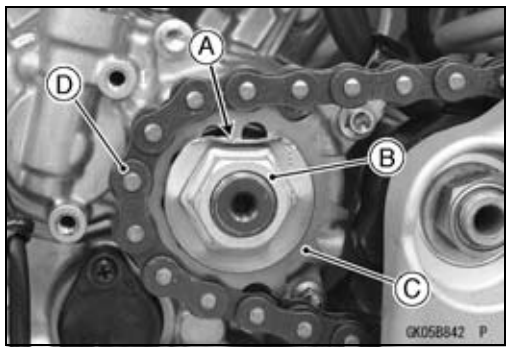

Engine Sprocket Installation

- Install the engine sprocket so that the stepped side [A] faces inside.
- Replace the sprocket washer with a new one.
- Install the sprocket washer and sprocket nut.

  Torque - Engine Sprocket Nut: 70 N·m (7.1 kgf·m, 52 ft·lb)
- Bend the one side of the sprocket washer on the nut.
- Install the drive chain guide and engine sprocket cover.

  Torque - Engine Sprocket Cover Bolts : 5.0 N·m (0.51 kgf·m, 44 in·lb)

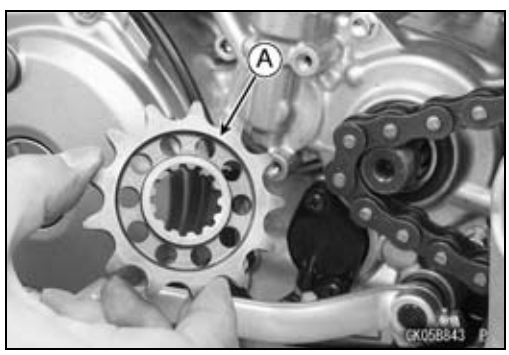

Rear Sprocket Removal

- Remove the rear wheel (see Rear Wheel Removal in the Wheels/Tires chapter).

NOTICE
Do not lay the wheel on the ground with the disc facing down. This can damage or warp the disc. Place blocks under the wheel so that the disc does not touch the ground.

- Remove:
  Rear Sprocket Bolts [A] and Nuts
  Washers
  Rear Sprocket [B]

Sprockets

Rear Sprocket Installation

- Replace the rear sprocket nuts with new ones.
- Install the rear sprocket [A] so that the marked side [B] faces out.

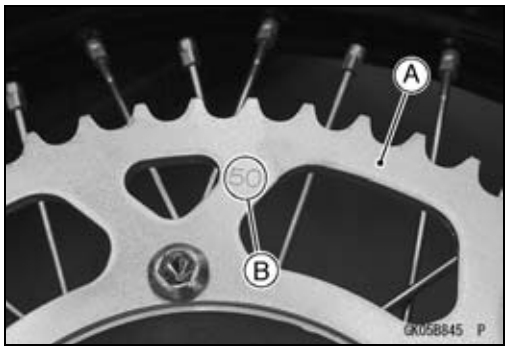

- Install the rear sprocket bolts [A] and washers [B].
- Install the rear sprocket nuts [C] with the flange side facing inward, and tighten the rear sprocket nuts following the tightening sequence [1 ~ 7].

  Torque - Rear Sprocket Nuts: 35 N·m (3.6 kgf·m, 26 ft·lb)

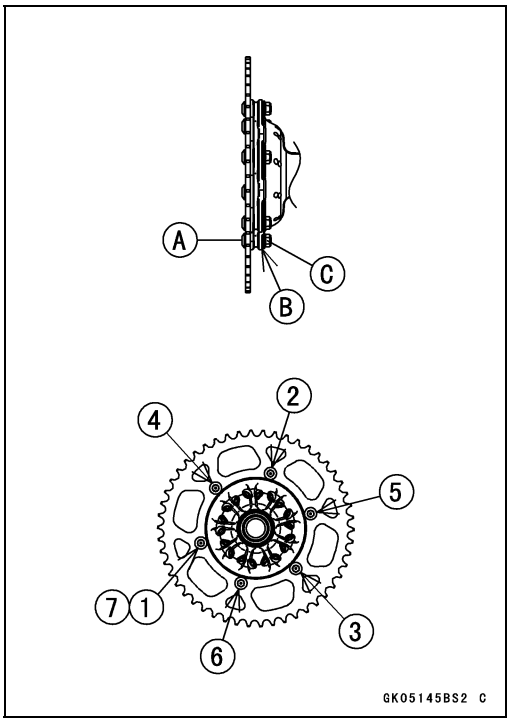

Sprocket Wear Inspection

- Refer to the Sprocket Wear Inspection in the Periodic Maintenance chapter.

Rear Sprocket Warp (Runout) Inspection

- Refer to the Rear Sprocket Warp (Runout) Inspection in the Periodic Maintenance chapter.

Brakes

Table of Contents

Exploded View 12-2
Specifications 12-6
Special Tools 12-7
Brake Lever, Brake Pedal 12-8
- Brake Lever Play Adjustment 12-8
- Brake Pedal Position Adjustment 12-8
- Brake Pedal Removal 12-8
- Brake Pedal Installation 12-8

Brake Fluid 12-10
- Brake Fluid Level Inspection 12-10
- Brake Fluid Change 12-10
- Brake Line Bleeding 12-11

Caliper 12-13
- Caliper Removal 12-13
- Caliper Installation 12-13
- Caliper Disassembly 12-14
- Fluid Seal Damage Inspection 12-15
- Dust Seal Damage Inspection 12-15
- Caliper Dust Boot and Friction Boot Damage Inspection 12-15
- Caliper Piston and Cylinder Damage Inspection 12-16
- Caliper Holder Shaft Wear Inspection 12-16

Brake Pad 12-17
- Brake Pad Removal 12-17
- Brake Pad Installation 12-18
- Brake Pad Inspection 12-19

Master Cylinder 12-20
- Front Master Cylinder Removal 12-20
- Front Master Cylinder Installation 12-20
- Rear Master Cylinder Removal 12-21
- Rear Master Cylinder Installation 12-21
- Front Master Cylinder Disassembly 12-22
- Rear Master Cylinder Disassembly 12-22
- Master Cylinder Assembly 12-22
- Master Cylinder Inspection (Visual Inspection) 12-23

Brake Disk 12-24
- Brake Disc Removal 12-24
- Brake Disc Installation 12-24
- Brake Disc Inspection 12-24

Brake Hose 12-25
- Brake Hose Removal/Installation 12-25
- Brake Hose Inspection 12-25

Exploded View

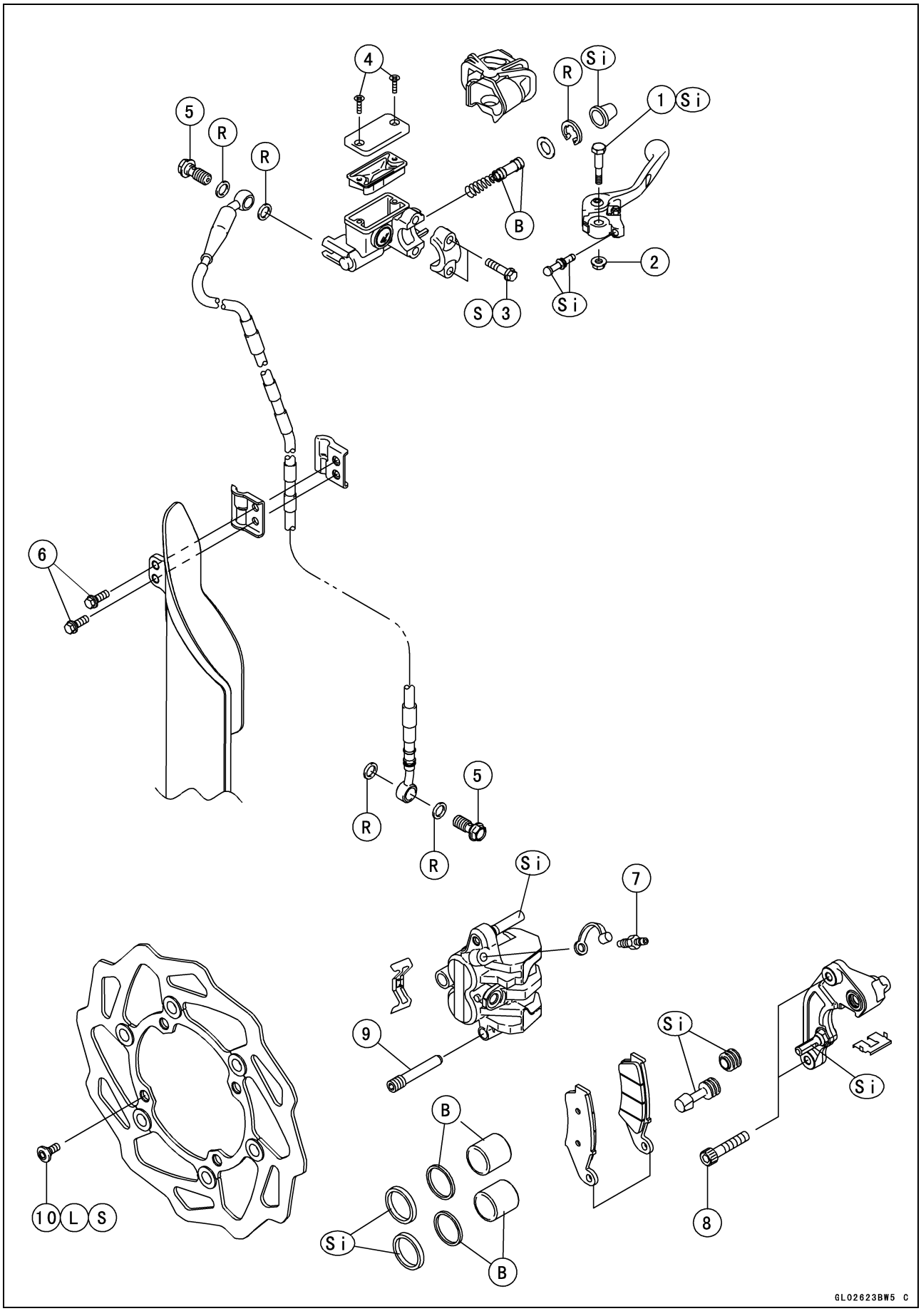

Exploded View

No.	Fastener	Torque			Remarks
		N·m	kgf·m	ft·lb	
1	Brake Lever Pivot Bolt	5.9	0.60	52 in·lb	Si
2	Brake Lever Pivot Bolt Locknut	5.9	0.60	52 in·lb	
3	Front Master Cylinder Clamp Bolts	9.0	0.92	80 in·lb	S
4	Front Brake Reservoir Cap Screws	1.5	0.15	13 in·lb	
5	Brake Hose Banjo Bolts	25	2.5	18	
6	Front Brake Hose Clamp Bolt	7.0	0.71	62 in·lb	
7	Caliper Bleed Valve	8.0	0.82	71 in·lb	
8	Front Caliper Mounting Bolts	25	2.5	18	
9	Brake Pad Pin	17	1.7	13	
10	Front Brake Disc Mounting Bolts	10	1.0	89 in·lb	L, S

B: Apply brake fluid.
L: Apply a non-permanent locking agent.
R: Replacement Parts
S: Follow the specified tightening sequence.
Si: Apply silicone grease (ex. PBC grease).

Exploded View

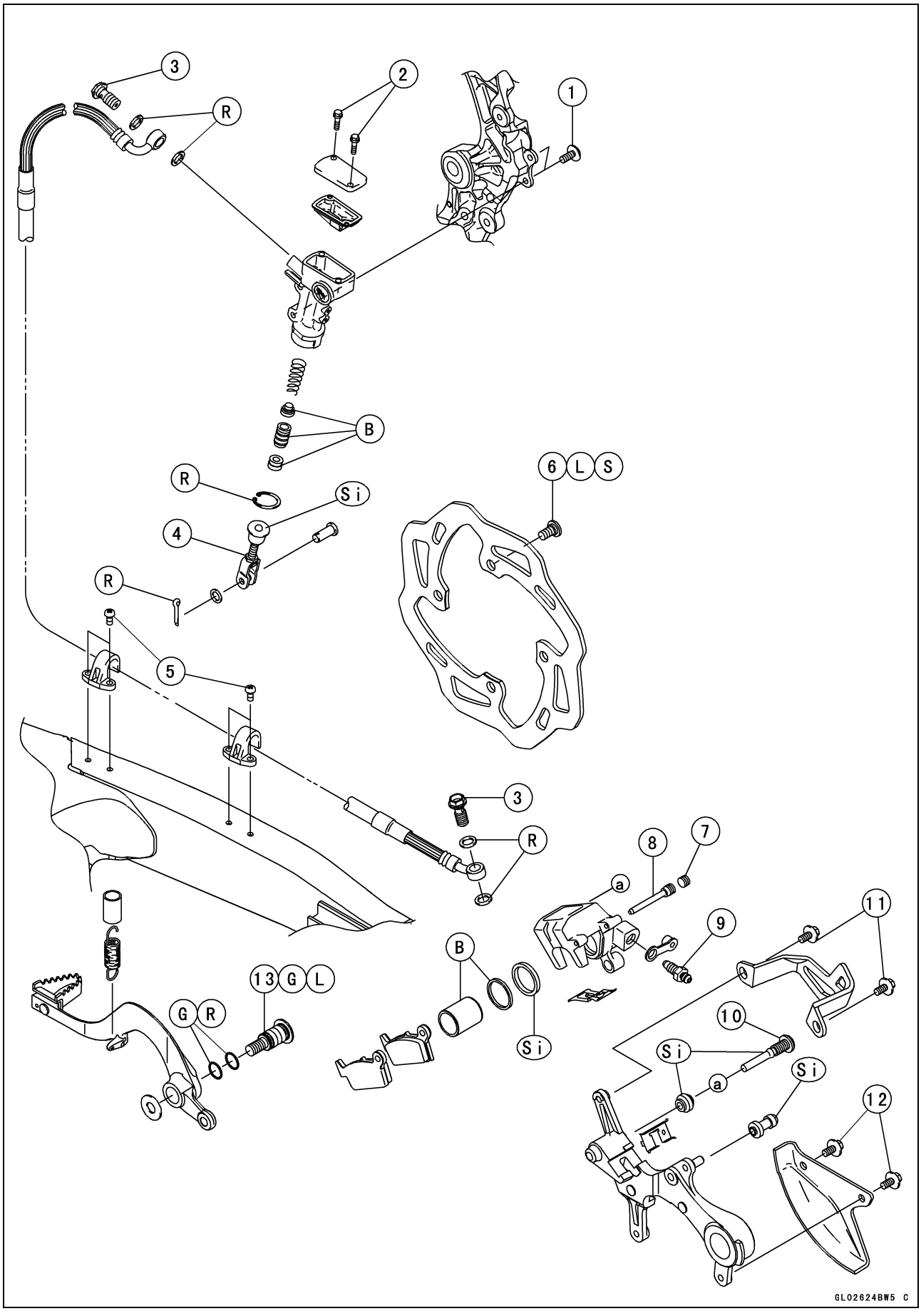

Exploded View

No.	Fastener	Torque			Remarks
		N·m	kgf·m	ft·lb	
1	Rear Master Cylinder Mounting Bolts	10	1.0	89 in·lb	
2	Rear Brake Reservoir Cap Bolts	1.5	0.15	13 in·lb	
3	Brake Hose Banjo Bolts	25	2.5	18	
4	Rear Master Cylinder Push Rod Locknut	17	1.7	13	
5	Rear Brake Hose Clamp Screws	2.5	0.25	22 in·lb	
6	Rear Brake Disc Mounting Bolts	23	2.3	17	L, S
7	Brake Pad Pin Plug	2.5	0.25	22 in·lb	
8	Brake Pad Pin	17	1.7	13	
9	Caliper Bleed Valve	8.0	0.82	71 in·lb	
10	Rear Caliper Holder Shaft	27	2.8	20	Si
11	Caliper Guard Bolts	6.0	0.61	53 in·lb	
12	Rear Brake Disc Guard Bolts	6.0	0.61	53 in·lb	
13	Brake Pedal Bolt	25	2.5	18	L, G

B: Apply brake fluid.
G: Apply grease.
L: Apply a non-permanent locking agent.
R: Replacement Parts
S: Follow the specified tightening sequence.
Si: Apply silicone grease (ex. PBC grease).

Specifications

Item	Standard	Service Limit
Brake Fluid		
Grade:		
Front	DOT3 or DOT4	– – –
Rear	DOT3 or DOT4	– – –
Brake Pads		
Lining Thickness:		
Front	4.0 mm (0.16 in.)	1 mm (0.04 in.)
Rear	6.4 mm (0.25 in.)	1 mm (0.04 in.)
Brake Discs		
Thickness:		
Front	2.9 ~ 3.2 mm (0.11 ~ 0.13 in.)	2.5 mm (0.10 in.)
Rear	3.9 ~ 4.2 mm (0.15 ~ 0.17 in.)	3.5 mm (0.14 in.)
Runout:		
Front	TIR 0.12 mm (0.0047 in.) or less	TIR 0.3 mm (0.013 in.)
Rear	TIR 0.15 mm (0.0059 in.) or less	TIR 0.3 mm (0.013 in.)

Special Tools

Jack:
57001-1238

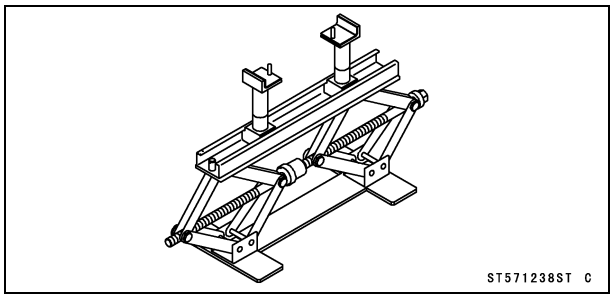

Jack Attachment:
57001-1608

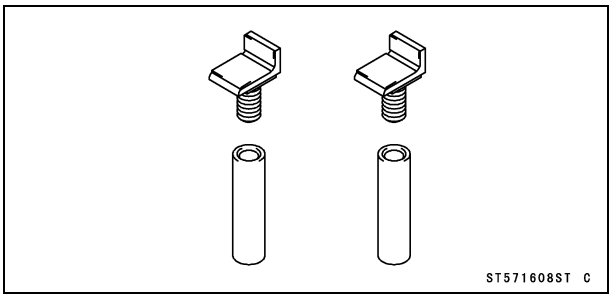

Brake Lever, Brake Pedal

Brake Lever Play Adjustment

- Refer to the Brake Lever and Pedal Adjustment in the Periodic Maintenance chapter.

Brake Pedal Position Adjustment

- Refer to the Brake Lever and Pedal Adjustment in the Periodic Maintenance chapter.

Brake Pedal Removal

- Remove:
  Cotter Pin [A]
  Joint Pin [B]
  Washer [C]

NOTE

○*Pull off the joint pin while pressing down the brake pedal.*

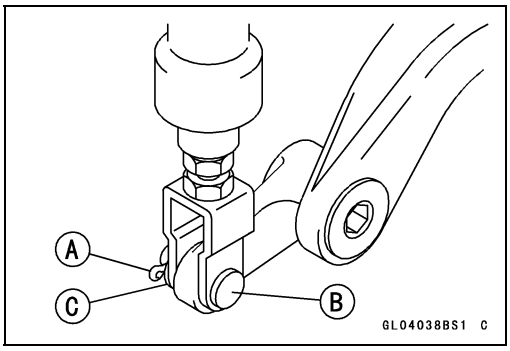

- Remove:
  Brake Pedal Bolt [A] and Washer
  Brake Pedal Return Spring [B]
  Brake Pedal [C]

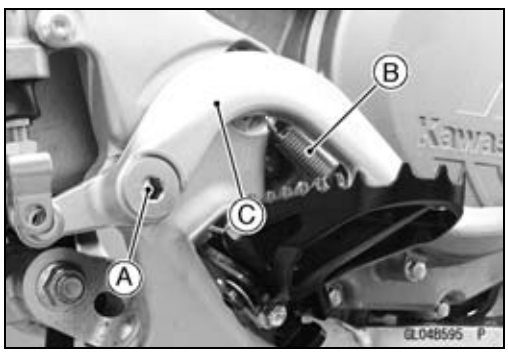

Brake Pedal Installation

- Install the return spring [A] as shown.

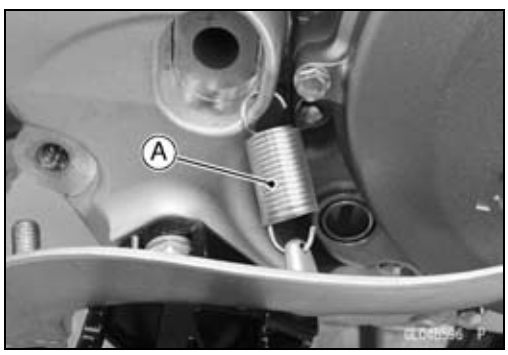

- Replace the O-rings [A] with new ones.
- Apply grease to the O-rings and shaft portion [B] of the brake pedal bolt.
- Apply a non-permanent locking agent to the thread of the brake pedal bolt.
- Install the brake pedal [C].

○Install the washer [D] inside the pedal.

- Tighten:

Torque - Brake Pedal Bolt: 25 N·m (2.5 kgf·m, 18 ft·lb)

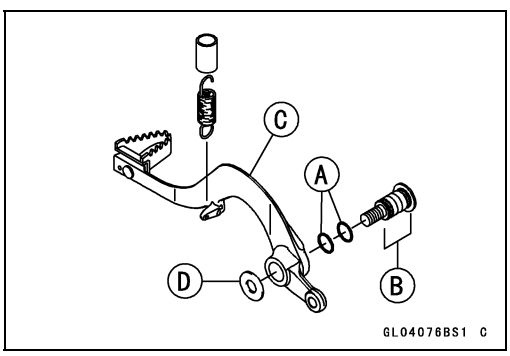

Brake Lever, Brake Pedal

- Replace the cotter pin with a new one.
- Install the joint pin, washer and new cotter pin.

○Bend the ends [A] of the cotter pin as shown.

- Check the brake pedal position (see Brake Lever and Pedal Adjustment in the Periodic Maintenance chapter).

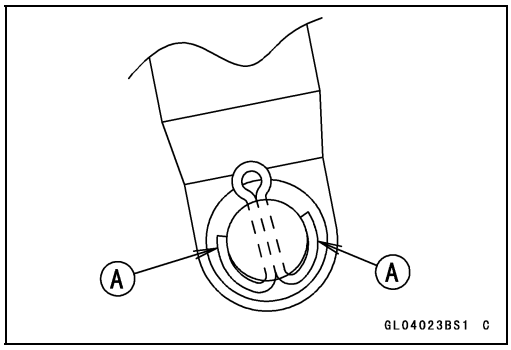

Brake Fluid

⚠ WARNING

When working with the disc brake, observe the precautions listed below.

- **Never reuse old brake fluid.**
- **Do not use fluid from a container that has been left unsealed or that has been open for a long time.**
- **Do not mix two types and brands of fluid for use in the brake. This lowers the brake fluid boiling point and could cause the brake to be ineffective. It may also cause the rubber brake parts to deteriorate.**
- **Don't leave the reservoir cap off for any length of time to avoid moisture contamination of the fluid.**
- **Don't change the fluid in the rain or when a strong wind is blowing.**
- **Except for the disc pads and disc, use only disc brake fluid, isopropyl alcohol, or ethyl alcohol for cleaning of the brake parts. Do not use any other fluid for cleaning these parts. Gasoline, engine oil, or any other petroleum distillate will cause deterioration of the rubber parts. Oil spilled on any part will be difficult to wash off completely and will eventually deteriorate the rubber used in the disc brake.**
- **When handling the disc pads or disc, be careful that no disc brake fluid or any oil gets on them. Clean off any fluid or oil that inadvertently gets on the pads or disc with a high flash-point solvent. Do not use one which will leave an oily residue. Replace the pads with new ones if they cannot be cleaned satisfactorily.**
- **Brake fluid quickly damages painted surfaces; any spilled fluid should be completely wiped up immediately.**
- **If any of the brake line fittings or the bleed valve is opened at any time, the AIR MUST BE BLED FROM THE BRAKE LINE.**

Brake Fluid Level Inspection

- Refer to the Brake Fluid Level Inspection in the Periodic Maintenance chapter.

Brake Fluid Change

- Refer to the Brake Fluid Change in the Periodic Maintenance chapter.

Brake Fluid

Brake Line Bleeding

The brake fluid has a very low compression coefficient so that almost all the movement of the brake lever or pedal is transmitted directly to the caliper for braking action. Air, however, is easily compressed. When air enters the brake lines, brake lever or pedal movement will be partially used in compressing the air. This will make the lever or pedal feel spongy, and there will be a loss in braking power.

⚠ WARNING

Air in the brake lines diminish braking performance and can cause an accident resulting in injury or death. If the brake lever has a soft or "spongy" feeling mushy when it is applied, there might be air in the brake lines or the brake may be defective. Do not operate the vehicle and service the brake system immediately.

NOTE

○*The procedure to bleed the front brake line is as follows. Bleeding the rear brake line is the same as for the front brake.*

- Level the brake fluid reservoir.
- Remove:
  Screws [A]
  Reservoir Cap [B]
  Diaphragm

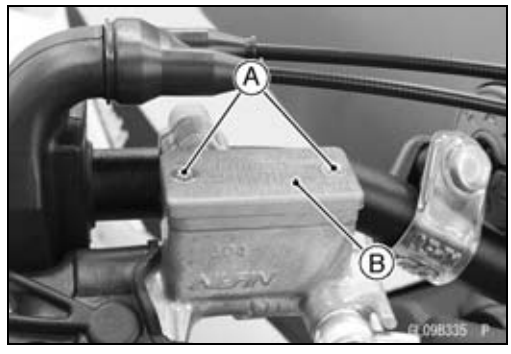

NOTICE

Brake fluid quickly damages painted plastic surfaces; any spilled fluid should be completely washed away immediately.

- Check that there is plenty of fluid in the reservoir.
- Slowly pump the brake lever several times until no air bubbles rise up from the bottom of the reservoir.

○Bleed the air completely from the master cylinder by this operation.

- Remove the rubber cap [A] from the bleed valve on the caliper.
- Attach a clear plastic hose [B] to the bleed valve on the caliper, and run the other end of the hose into a container.

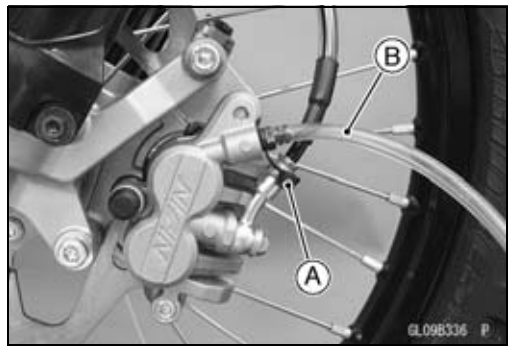

Brake Fluid

- Bleed the brake line and caliper as follows:

○Repeat this operation until no more air can be seen coming out into the clear plastic hose.

1. Pump the brake lever until it becomes hard, and apply the brake and hold it [A].
2. Quickly open and close [B] the bleed valve while holding the brake applied.
3. Release the brake [C].

NOTE

○*The fluid level must be checked often during the bleeding operation and replenished with fresh brake fluid as necessary. If the fluid in the reservoir runs almost out any time during bleeding operation, the bleeding operation must be done over again from the beginning since air will have entered the line.*

○*Tap the brake hose lightly from the caliper to the reservoir for easier bleeding.*

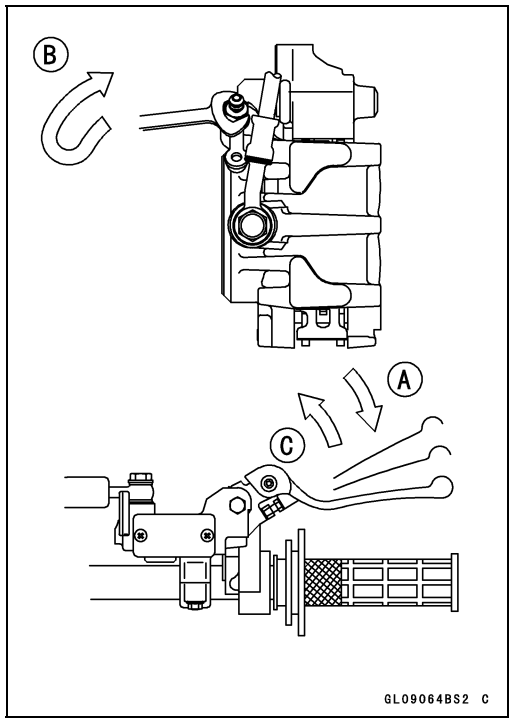

- Remove the clear plastic hose.
- Tighten the bleed valve, and install the rubber cap.

Torque - Caliper Bleed Valve: 8.0 N·m (0.82 kgf·m, 71 in·lb)

- Check the fluid level (see Brake Fluid Level Inspection in the Periodic Maintenance chapter).
- Install the diaphragm and reservoir cap.
- Tighten:

Torque - Front Brake Reservoir Cap Screws: 1.5 N·m (0.15 kgf·m, 13 in·lb)
Rear Brake Reservoir Cap Bolts: 1.5 N·m (0.15 kgf·m, 13 in·lb)

- After bleeding is done, check the brake for good braking power, no brake drag, and no fluid leakage.

⚠ WARNING

After servicing, it takes several applications of the brake lever or pedal before the brake pads contact the disc, which could result in increased stopping distance and cause an accident resulting in injury or death. Do not attempt to ride the motorcycle until a firm brake lever or pedal is obtained by pumping the lever or pedal until the pads are against the disc.

Caliper

Caliper Removal

Front Brake

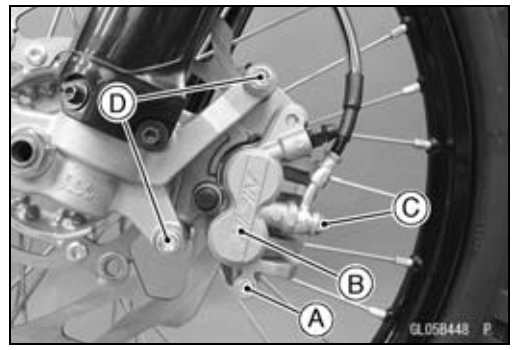

- Loosen the brake pad pin [A] before the caliper [B] removal if the caliper is to be disassembled.
- Loosen the banjo bolt [C] so as not to spill brake fluid.
- Remove:
  Caliper Mounting Bolts [D]
  Banjo Bolt
  Caliper

NOTICE
Brake fluid quickly damages painted plastic surfaces; any spilled fluid should be completely washed away immediately.

Rear Brake

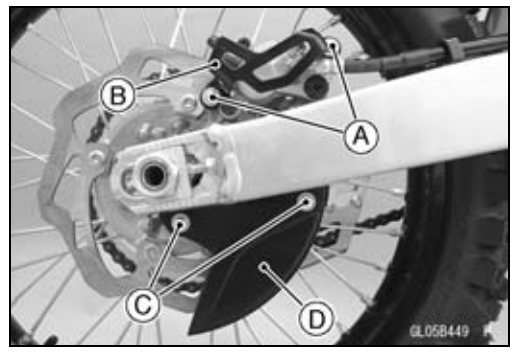

- Remove:
  Caliper Guard Bolts [A]
  Caliper Guard [B]
  Rear Brake Disc Guard Bolts [C]
  Rear Brake Disc Guard [D]

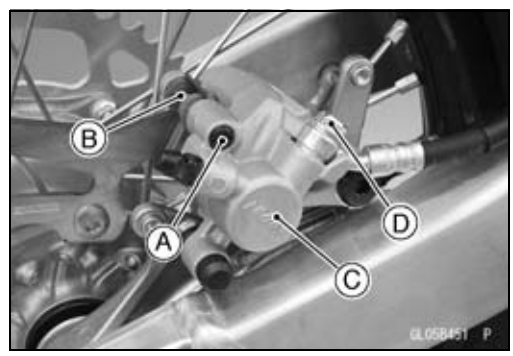

- Remove the pad pin plug [A] and loosen the pad pin [B] if the caliper [C] is to be disassembled.
- Loosen the banjo bolt [D] so as not to spill brake fluid.
- Remove:
  Rear Wheel (see Rear Wheel Removal in the Wheels/Tires chapter)
  Banjo Bolt
  Caliper

NOTICE
Brake fluid quickly damages painted plastic surfaces; any spilled fluid should be completely washed away immediately.

Caliper Installation

- Install the brake pad if it was removed (see Brake Pad Installation).

Front Brake

- Install the caliper and tighten the bolts.

Torque - Front Caliper Mounting Bolts: 25 N·m (2.5 kgf·m, 18 ft·lb)

Rear Brake

- Install the rear wheel and caliper (see Rear Wheel Installation in the Wheels/Tires chapter).

Caliper

- Install the brake hose lower end.
  - ○Replace the washers [A] on each side of hose fitting [B] with new ones.
  - ○Touch the brake hose to the stopper of the caliper.
- Tighten:

  Torque - Brake Hose Banjo Bolt: 25 N·m (2.5 kgf·m, 18 ft·lb)

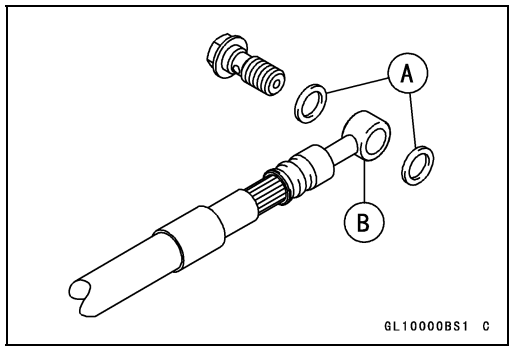

- Install the caliper guard and tighten the caliper guard bolts.

  Torque - Caliper Guard Bolts: 6.0 N·m (0.61 kgf·m, 53 in·lb)
- Install the rear brake disc guard and tighten the rear brake disc guard bolts.

  Torque - Rear Brake Disc Guard Bolts: 6.0 N·m (0.61 kgf·m, 53 in·lb)
- Bleed the brake line (see Brake Line Bleeding).
- Check the brake for good braking power, no brake drag, and no fluid leakage.

⚠ WARNING

After servicing, it takes several applications of the brake lever or pedal before the brake pads contact the disc, which could result in increased stopping distance and cause an accident resulting in injury or death. Do not attempt to ride the motorcycle until a firm brake lever or pedal is obtained by pumping the lever or pedal until the pads are against the disc.

Caliper Disassembly

- Refer to the Brake Caliper Fluid Seal and Dust Seal Replacement in the Periodic Maintenance chapter.

Caliper

Fluid Seal Damage Inspection

The fluid seal(s) [A] around the piston maintains the proper pad/disc clearance. If this seal is not in good condition, pad wear will increase, and constant pad drag on the disc will raise brake and brake fluid temperature.

- Replace the fluid seals under any of the following conditions.

○Fluid leakage around the pad
○Brakes overheat
○There is a large difference in left and right pad wear.
○The seal is stuck to the piston.

★If the fluid seal(s) is replaced, replace the dust seal(s) [B] as well. Also, replace all seals every other time the pads are changed.
Front Caliper [C]
Rear Caliper [D]

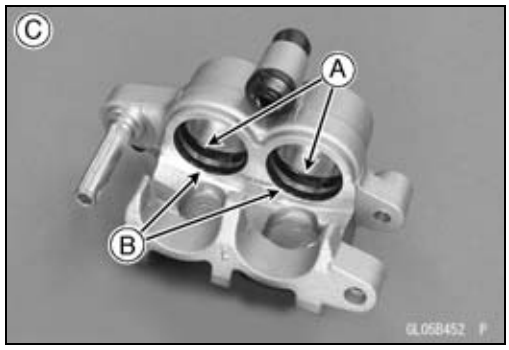

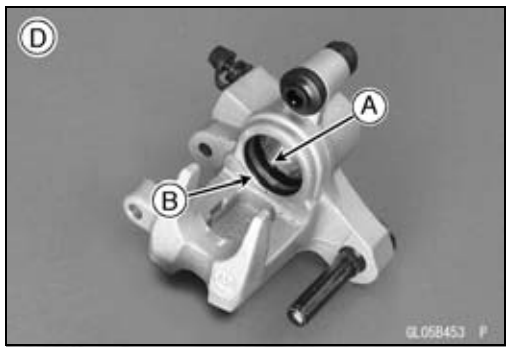

Dust Seal Damage Inspection

- Check that the dust seals are not cracked, worn, swollen, or otherwise damaged.

★If they show any damage, replace them.

Caliper Dust Boot and Friction Boot Damage Inspection

- Check that the dust boot [A] and friction boot [B] are not cracked, worn, swollen, or other wise damaged.

★If they show any damage, replace them.
Front Caliper [C]
Rear Caliper [D]

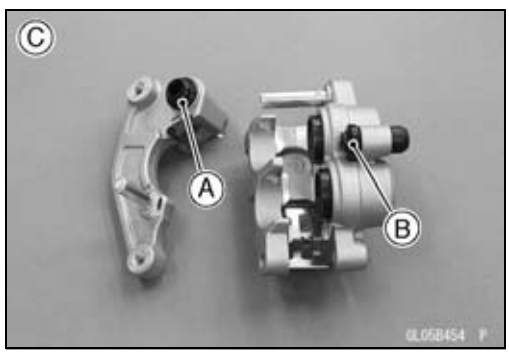

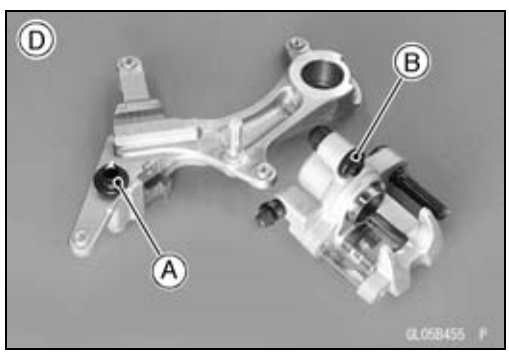

Caliper

Caliper Piston and Cylinder Damage Inspection

- Visually inspect the piston(s) [A] and cylinder surfaces.

★Replace the caliper if the cylinder and piston are badly scores or rusty.
Front Caliper [B]
Rear Caliper [C]

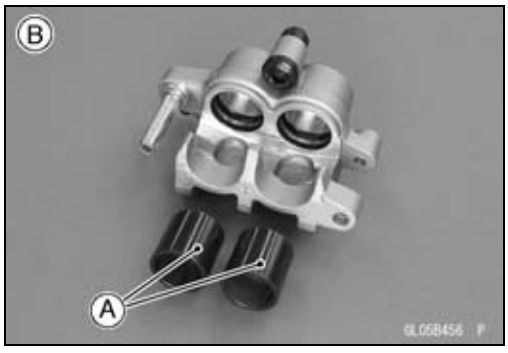

Caliper Holder Shaft Wear Inspection

The caliper body must slide smoothly on the caliper holder shafts [A]. If the body does not slide smoothly, one pad will wear more than the other, pad wear will increase, and constant drag on the disc will raise brake and brake fluid temperature.

- Check to see that the caliper holder shafts are not badly worn or stepped, and that the friction boots are not damaged.

★If the friction boot is damaged, replace the friction boot. To replace the friction boot, remove the pads and caliper bracket.

★If the caliper holder shaft is damage, replace the caliper assembly (front caliper), caliper bracket or holder shaft (rear caliper).

Torque - Rear Caliper Holder Shaft: 27 N·m (2.8 kgf·m, 20 ft·lb)

Front Caliper [B]
Rear Caliper [C]

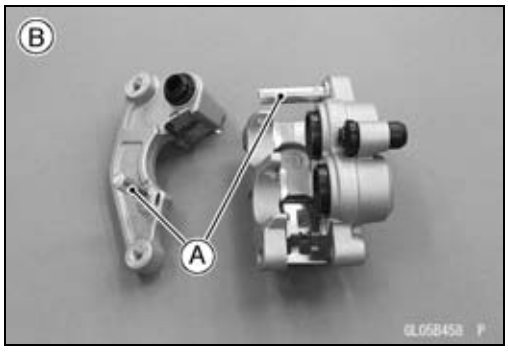

Brake Pad

Brake Pad Removal

Front Brake

- Loosen the pad pin [A].
- Remove the bolts [B].
- Remove the caliper with the hose installed.

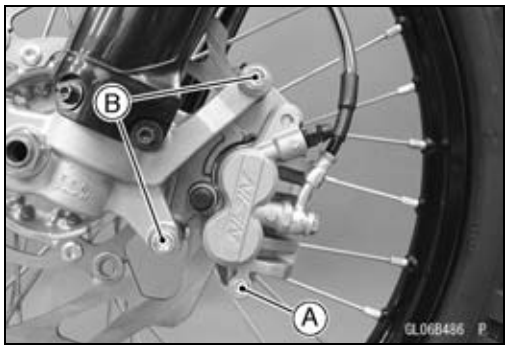

- Remove:
  Pad Pin [A]
  Brake Pads [B]

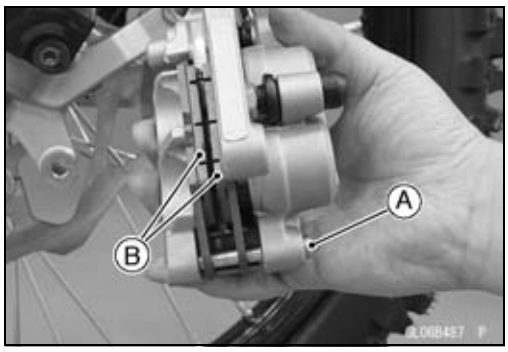

Rear Brake

- Remove:
  Pad Pin Plug [A]

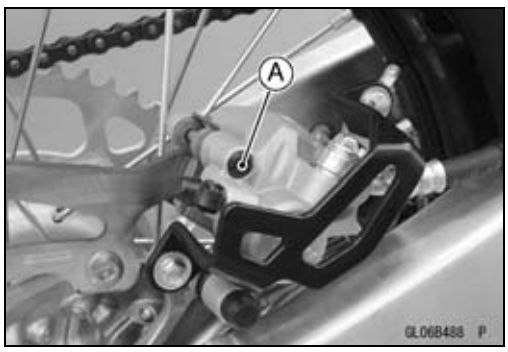

- Remove the pad pin [A].
- Remove the piston side pad [B].
- Push the caliper holder toward the brake disc, and then remove another pad [C].

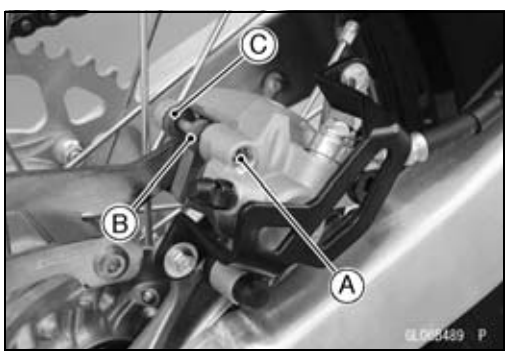

Brake Pad

Brake Pad Installation

- Check that the anti-rattle springs [A] are in place on the caliper.
  Front Brake [B]
  Rear Brake [C]

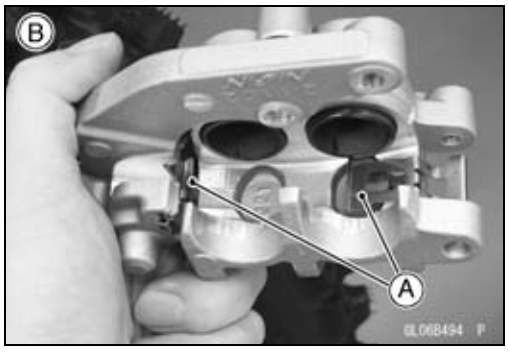

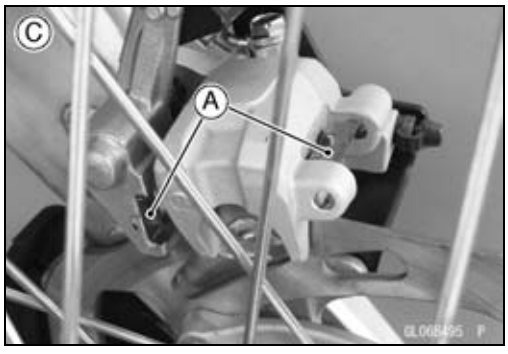

- Push the caliper piston(s) in by hand as far as they will go.
- Install the piston side pad first, and then another pad.

○Fit the pad end into the groove [A] of the anti-rattle spring securely.
  Front Brake [B]
  Rear Brake [C]

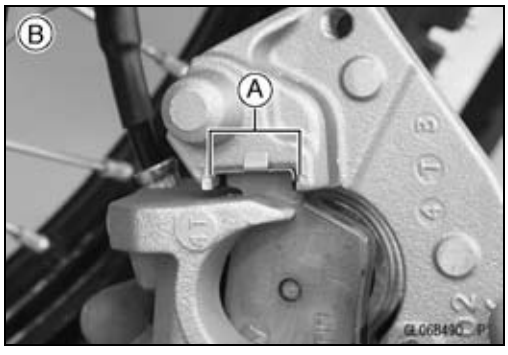

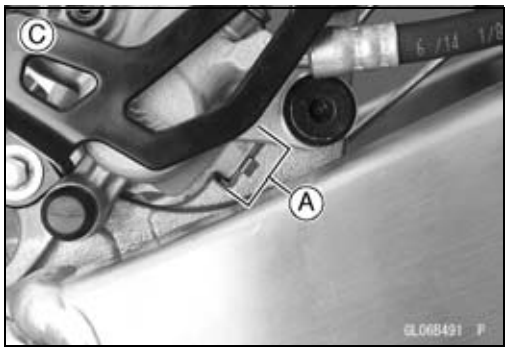

Brake Pad

- Install the front caliper and tighten the bolts.

  Torque - Front Caliper Mounting Bolts: 25 N·m (2.5 kgf·m, 18 ft·lb)

- Tighten the brake pad pin.

  Torque - Brake Pad Pin: 17 N·m (1.7 kgf·m, 13 ft·lb)
  Brake Pad Pin Plug: 2.5 N·m (0.25 kgf·m, 22 in·lb)

- Check the brake for good braking power, no brake drag, and no fluid leakage.

⚠ WARNING

After servicing, it takes several applications of the brake lever or pedal before the brake pads contact the disc, which could result in increased stopping distance and cause an accident resulting in injury or death. Do not attempt to ride the motorcycle until a firm brake lever or pedal is obtained by pumping the lever or pedal until the pads are against the disc.

Brake Pad Inspection

- Refer to the Brake Pad Wear Inspection in the Periodic Maintenance chapter.

Master Cylinder

Front Master Cylinder Removal

- Remove the banjo bolt [A] to disconnect the brake hose upper end [B] from the master cylinder [C].

○When removing the brake hose, temporarily secure the end of the brake hose to some high place to keep fluid loss to a minimum.

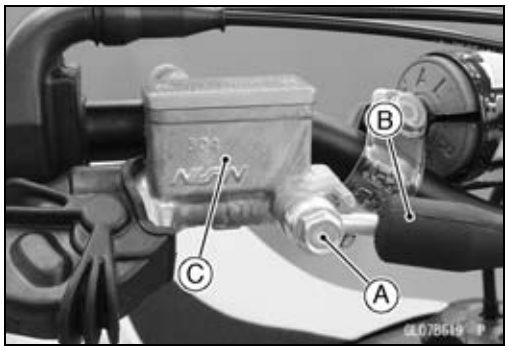

- Remove the clamp bolts [A], and take off the master cylinder [B] as an assembly with the brake lever.

NOTICE
Brake fluid quickly damages painted or plastic surfaces; any spilled fluid should be completely washed up immediately.

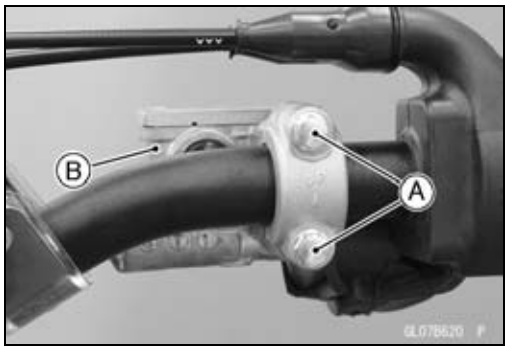

Front Master Cylinder Installation

- Install the master cylinder [A] position as shown.
  165 mm (6.50 in.) [B]
  Horizontal Line of Frame [C]
  Handlebar [D]
  Horizontal Line of Cap Surface [E]

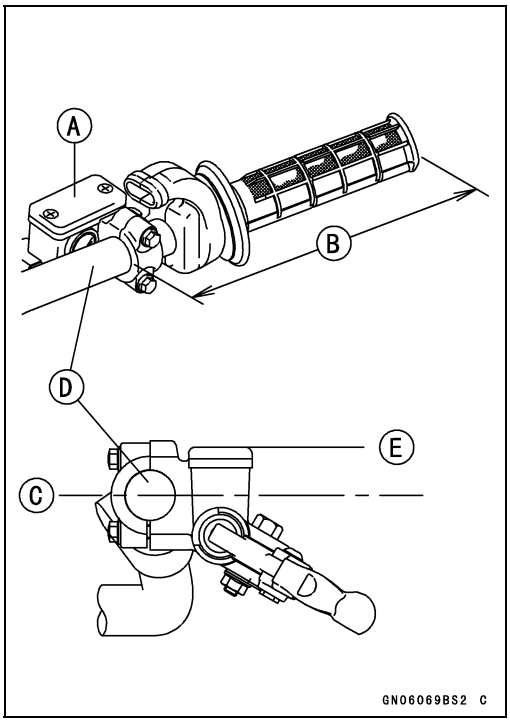

- The master cylinder clamp must be installed with the arrow mark [A] upward.
- Tighten the upper clamp bolt [B] first, and then the lower clamp bolt [C].

○There will be a gap at the lower mating surface of the clamp after tightening.

Torque - Front Master Cylinder Clamp Bolts: 9.0 N·m (0.92 kgf·m, 80 in·lb)

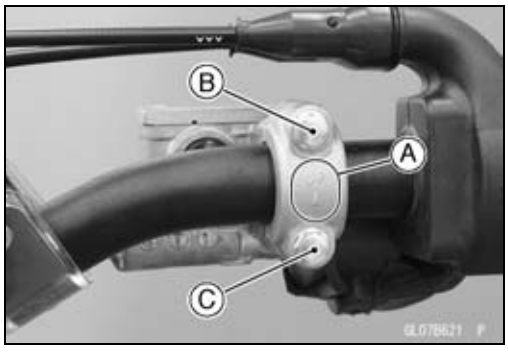

Master Cylinder

- Install the brake hose.
  - ○Replace the washers [A] on each side of hose fitting [B] with new ones.
  - ○Touch the brake hose to the stopper of the front master cylinder.
- Tighten:

  Torque - Brake Hose Banjo Bolt: 25 N·m (2.5 kgf·m, 18 ft·lb)
- Bleed the brake line (see Brake Line Bleeding).
- Check the brake for good braking power, no brake drag, and no fluid leakage.

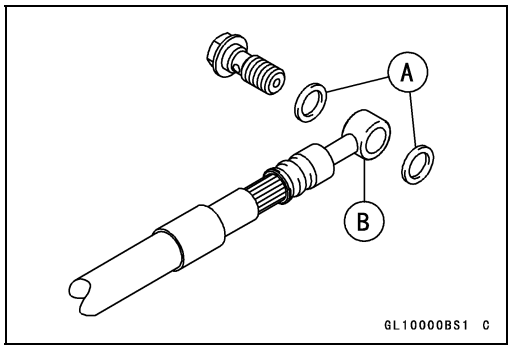

⚠ WARNING

After servicing, it takes several applications of the brake lever before the brake pads contact the disc, which could result in increased stopping distance and cause an accident resulting in injury or death. Do not attempt to ride the motorcycle until a firm brake lever is obtained by pumping the lever until the pads are against the disc.

Rear Master Cylinder Removal

- Remove:
  Cotter Pin [A]
  Joint Pin [B]
  Washer [C]

NOTE

○*Pull off the joint pin while pressing down the brake pedal.*

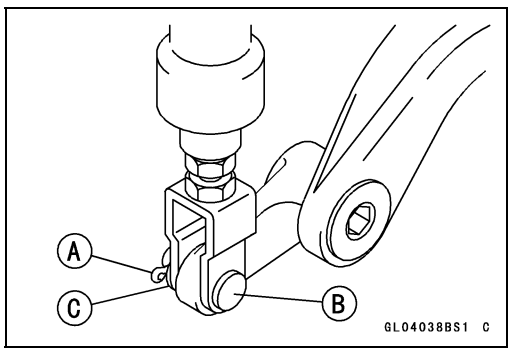

- Remove the master cylinder mounting bolts [A], and remove the master cylinder [B] backward.
- Remove the brake hose banjo bolt [C].
  - ○When removing the brake hose, temporarily secure the end of the brake hose to some high place to keep fluid loss to a minimum.

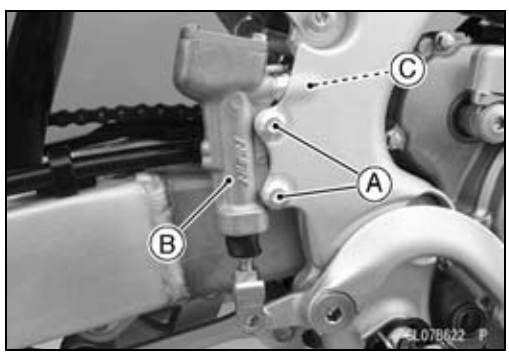

NOTICE

Brake fluid quickly damages painted or plastic surfaces; any spilled fluid should be completely washed up immediately.

Rear Master Cylinder Installation

- Install the brake hose.
  - ○Replace the washers [A] on each side of hose fitting [B] with new ones.
  - ○Touch the brake hose to the stopper of the rear master cylinder.
- Tighten:

  Torque - Brake Hose Banjo Bolt: 25 N·m (2.5 kgf·m, 18 ft·lb)
- Install the rear master cylinder.
- Tighten:

  Torque - Rear Master Cylinder Mounting Bolts: 10 N·m (1.0 kgf·m, 89 in·lb)

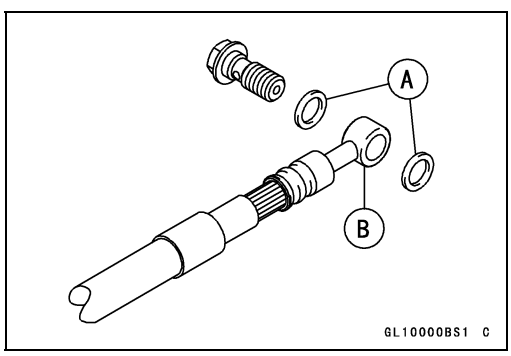

Master Cylinder

- Replace the cotter pin with a new one.
- Install the joint pin, washer and new cotter pin.
- Bend the ends [A] of the cotter pin as shown.

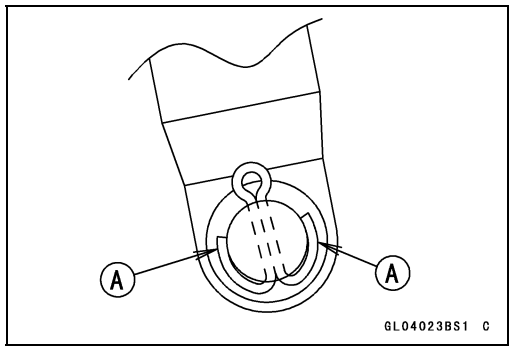

- Check the brake pedal position (see Brake Lever and Pedal Adjustment in the Periodic Maintenance chapter).
- Bleed the brake line (see Brake Line Bleeding).
- Check the brake for good braking power, no brake drag, and no fluid leakage.

⚠ WARNING

After servicing, it takes several applications of the brake pedal before the brake pads contact the disc, which could result in increased stopping distance and cause an accident resulting in injury or death. Do not attempt to ride the motorcycle until a firm brake pedal is obtained by pumping the pedal until the pads are against the disc.

Front Master Cylinder Disassembly

- Refer to the Brake Master Cylinder Cup and Dust Cover Replacement in the Periodic Maintenance chapter.

Rear Master Cylinder Disassembly

- Refer to the Brake Master Cylinder Cup and Dust Cover Replacement in the Periodic Maintenance chapter.

Master Cylinder Assembly

- Refer to the Brake Master Cylinder Cup and Dust Cover Replacement in the Periodic Maintenance chapter.

Master Cylinder

Master Cylinder Inspection (Visual Inspection)

- Disassemble the front and rear master cylinders.
- Check that there are no scratches, rust or pitting on the inner wall of each master cylinder [A] and on the outside of each piston [B].

★If a master cylinder or piston shows any damage, replace them.

- Inspect the primary [C] and secondary [D] cups.

★If a cup is worn, damaged, softened (rotted), or swollen, the piston assembly should be replace to renew the cups.

★If fluid leakage is noted at the brake lever, the piston assembly should be replaced to renew the cup.

- Check the dust covers [E] for damage.

★If they are damaged, replace them.

- Check that the relief [F] and supply [G] ports are not plugged.

★If the small relief port becomes plugged, the brake pads will drag on the disc. Blow the ports clean with compressed air.

- Check the piston return springs [H] for any damage.

★If a spring is damaged, replace it.

Front Master Cylinder [I]
Rear Master Cylinder [J]

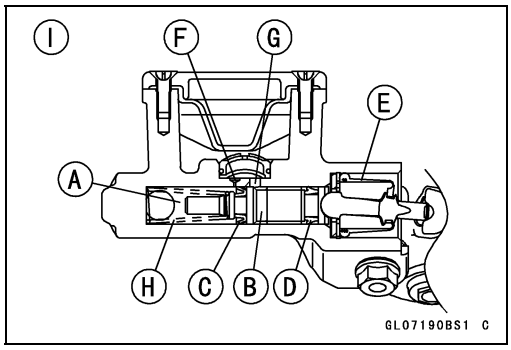

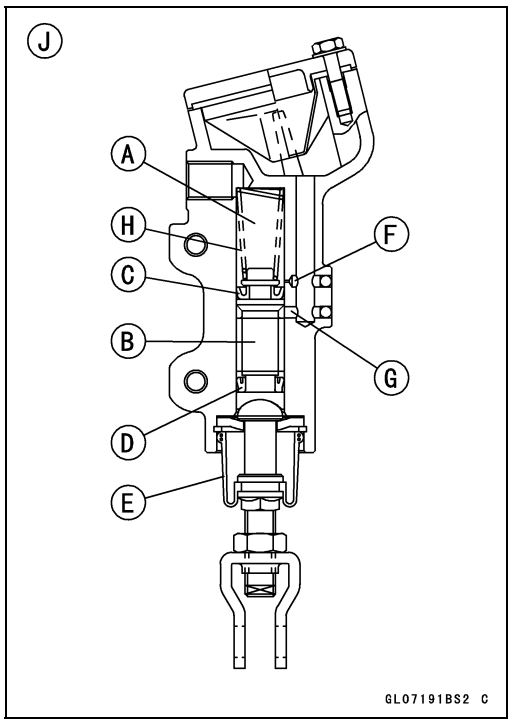

Brake Disk

Brake Disc Removal

- Remove the wheels (see Front/Rear Wheel Removal in the Wheels/Tires chapter).
- Remove the mounting bolts, and take off the disc.

Brake Disc Installation

- Install the brake disc on the wheel so that the marked side [A] faces out.
  Front Brake Disk [B]
  Rear Brake Disk [C]
- Apply a non-permanent locking agent to the threads of the brake disc mounting bolts.
- Tighten the brake disc mounting bolts following the tightening sequence [1 ~ 5].

Torque - Front Brake Disc Mounting Bolts [D]: 10 N·m (1.0 kgf·m, 89 in·lb)
Rear Brake Disc Mounting Bolts [E]: 23 N·m (2.3 kgf·m, 17 ft·lb)

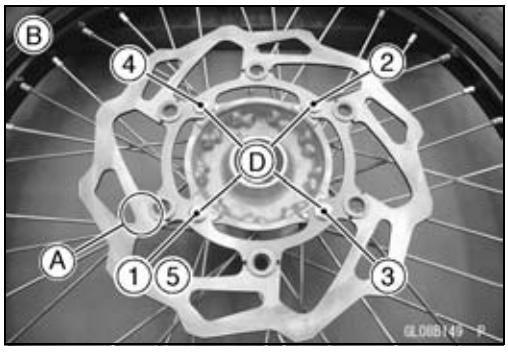

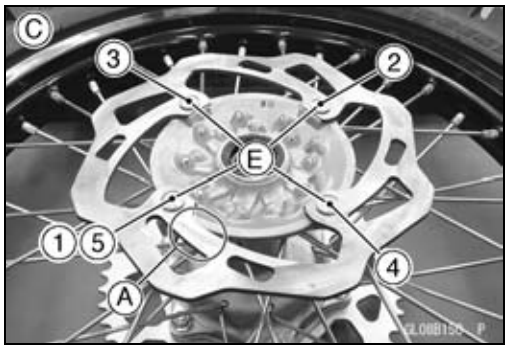

Brake Disc Inspection

- Visually inspect the disc [A].

★If it is scratched or damaged, replace the disc.

- Measure the thickness of each disc at the point [B] where it has worn the most.

Disc Thickness
Standard:

Front	**2.9 ~ 3.2 mm (0.11 ~ 0.13 in.)**
Rear	**3.9 ~ 4.2 mm (0.15 ~ 0.17 in.)**

Service Limit:

Front	**2.5 mm (0.10 in.)**
Rear	**3.5 mm (0.14 in.)**

★Replace the disc if it has worn past the service limit.

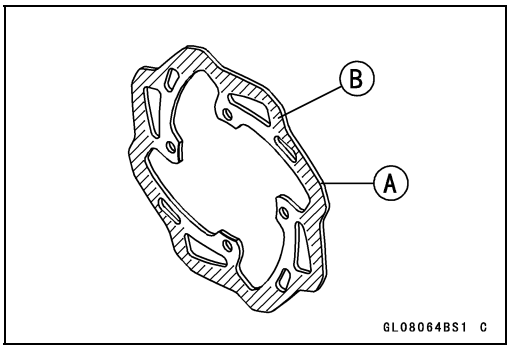

- Place a jack under the motorcycle so that the front/rear wheel is raised off the ground.

Special Tools - Jack: 57001-1238
Jack Attachment: 57001-1608

- Set up a dial gauge against the disc [A] as shown.

○For the front disc, turn the handlebar fully to one side.

- Measure the disc runout while rotating [B] the wheel slowly.

Disc Runout
Standard:

Front	**TIR 0.12 mm (0.0047 in.) or less**
Rear	**TIR 0.15 mm (0.0059 in.) or less**

Service Limit: TIR 0.3 mm (0.01 in.)

★If the runout exceeds the service limit, replace the disc.

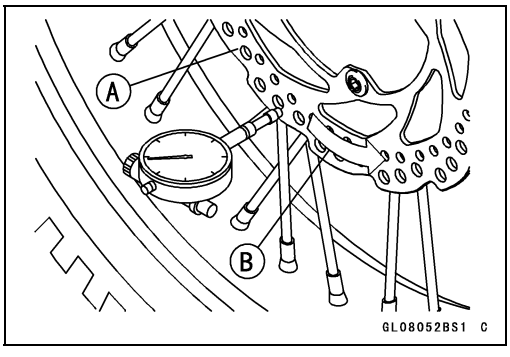

Brake Hose

Brake Hose Removal/Installation

- Refer to the Brake Hose Replacement in the Periodic Maintenance chapter.

Brake Hose Inspection

- Refer to the Brake Hoses and Connections Inspection in the Periodic Maintenance chapter.

Suspension

Table of Contents

Exploded View 13-2
Specifications 13-6
Special Tools 13-8
Front Fork 13-9
Air Pressure Adjustment (Right Front Fork) 13-9
Compression Damping Adjustment (Left Front Fork) 13-10
Rebound Damping Adjustment (Left Front Fork) 13-11
Oil Change 13-11
Front Fork Removal 13-11
Front Fork Installation 13-12
Front Fork Disassembly 13-13
Front Fork Assembly 13-13
Adjuster Assembly Inspection 13-14
Base Valve Assembly Inspection . 13-14
Cylinder Unit Inspection 13-15
Inner Tube Inspection 13-15
Dust Seal Inspection 13-15
Rear Shock Absorber 13-16
Rebound Damping Adjustment 13-16
Compression Damping Adjustment 13-16
Spring Preload Adjustment 13-17
Rear Shock Absorber Spring Tension Inspection 13-18
Rear Shock Absorber Removal ... 13-18
Rear Shock Absorber Installation 13-19
Rear Shock Absorber Spring Replacement 13-19
Rear Shock Absorber Disassembly 13-20
Rear Shock Absorber Assembly .. 13-22
Rear Shock Absorber Oil Change 13-23
Rear Shock Absorber Inspection . 13-24
Rear Shock Absorber Scrapping . 13-24
Swingarm 13-25
Swingarm Removal 13-25
Swingarm Installation 13-26
Swingarm Bearing Removal 13-26
Swingarm Bearing Installation 13-27
Drive Chain Guide, Guide Roller, Chain Slipper Wear Inspection .. 13-27
Swingarm Bearing, Sleeve Inspection 13-28
Tie-Rod, Rocker Arm 13-29
Tie-Rod Removal 13-29
Tie-Rod Installation 13-29
Rocker Arm Removal 13-29
Rocker Arm Installation 13-30
Tie-Rod and Rocker Arm Bearing Removal 13-30
Tie-Rod and Rocker Arm Bearing Installation 13-31
Needle Bearing Inspection 13-32
Uni-Trak Maintenance 13-33
Uni-Trak Linkage Inspection 13-33
Tie-Rod and Rocker Arm Sleeve Wear Inspection 13-33
Tie-Rod and Rocker Arm Mounting Bolt Bend Inspection . 13-33

Exploded View

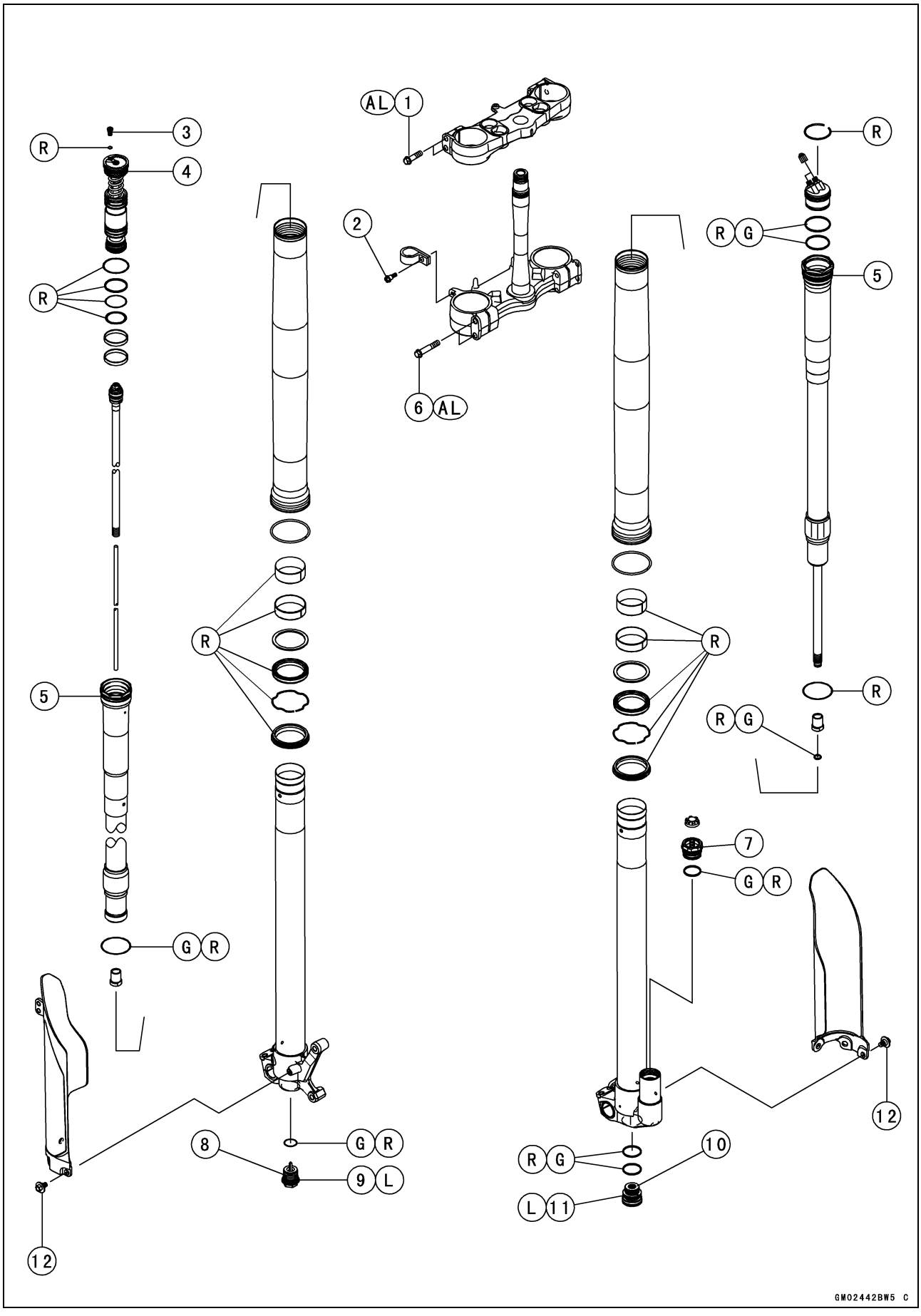

Exploded View

No.	Fastener	Torque			Remarks
		N·m	kgf·m	ft·lb	
1	Front Fork Clamp Bolts (Upper)	23	2.3	17	AL
2	Front Brake Hose Clamp Bolt (Stem Base)	3.0	0.31	27 in·lb	
3	Air Pressure Relief Screw	1.3	0.13	12 in·lb	
4	Base Valve Assembly	30	3.1	22	
5	Cylinder Units	76	7.7	56	
6	Front Fork Clamp Bolts (Lower)	23	2.3	17	AL
7	Plug Bolt	45	4.6	33	
8	Adjuster Assembly (to Piston Rod)	28	2.9	21	
9	Adjuster Assembly (to Axle Holder)	69	7.0	51	L
10	Sealing Bolt (to Piston Rod)	28	2.9	21	
11	Sealing Bolt (to Axle Holder)	69	7.0	51	L
12	Fork Protector Bolts	4.0	0.41	35 in·lb	

AL: Tighten the two clamp bolts alternately two times to ensure even tightening torque.
G: Apply grease.
L: Apply a non-permanent locking agent.
R: Replacement Parts

Exploded View

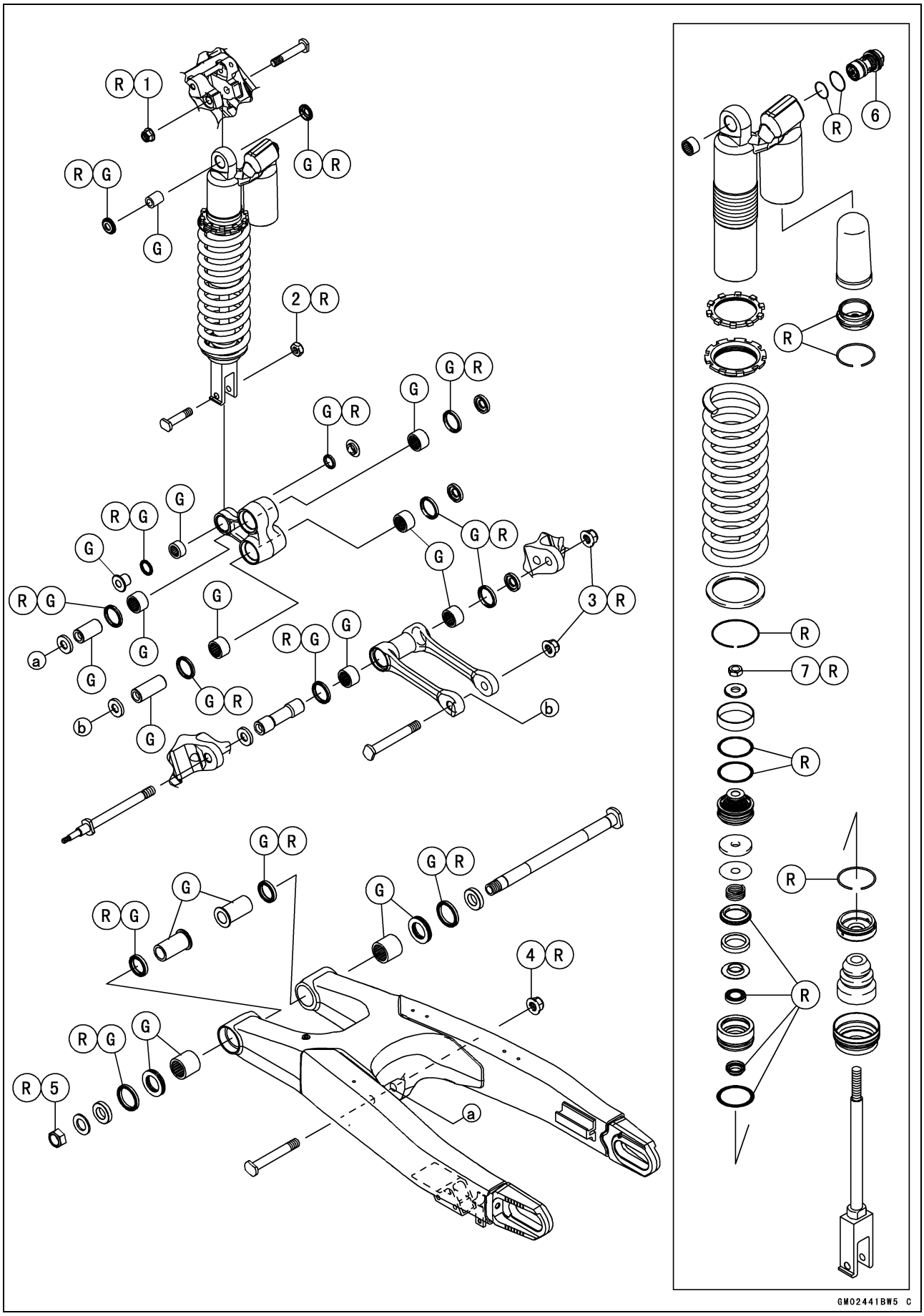

Exploded View

No.	Fastener	Torque			Remarks
		N·m	kgf·m	ft·lb	
1	Rear Shock Absorber Nut (Upper)	40	4.1	30	R
2	Rear Shock Absorber Nut (Lower)	35	3.6	26	R
3	Tie-rod Mounting Nuts	60	6.1	44	R
4	Rocker Arm Pivot Nut	60	6.1	44	R
5	Swingarm Pivot Shaft Nut	100	10.2	73.8	R
6	Gas Reservoir Damping Adjuster Assembly	29.5	3.01	21.8	
7	Piston Rod Locknut	37	3.8	27	R

G: Apply grease.
R: Replacement Parts

Specifications

Item	Standard	Service Limit
Front Fork		
Left Front Fork:		
Rebound Damping Adjustment (from the seated position adjuster turned fully clockwise)	(US, CA, AU) 13 clicks counterclockwise (EUR, BR) 14 clicks counterclockwise	(Adjustable Range) 20 Clicks
Compression Damping Adjustment (from the seated position adjuster turned fully clockwise)	(US, CA, AU) 9 clicks counterclockwise (EUR, BR) 12 clicks counterclockwise	(Adjustable Range) 22 Clicks
Right Front Fork:		
Air Pressure:		
Inner Chamber	(US, CA, AU) 1 200 kPa (12.24 kgf/cm², 174 psi) (EUR, BR) 1 100 kPa (11.21 kgf/cm², 160 psi)	(Adjustable Range) 600 ~ 1 400 kPa (6.11 ~ 14.28 kgf/cm², 87.0 ~ 203 psi)
Outer Chamber	100 kPa (1.02 kgf/cm², 14.5 psi)	(Adjustable Range) 0 ~ 130 kPa (0 ~ 1.33 kgf/cm², 0 ~ 18.9 psi)
Balance Chamber	(US, CA, AU) 1 400 kPa (14.28 kgf/cm², 203 psi) (EUR, BR) 1 200 kPa (12.24 kgf/cm², 174 psi)	(Adjustable Range) 530 ~ 1 500 kPa (5.40 ~ 15.30 kgf/cm², 76.9 ~ 218 psi)
Suspension Oil:	Kawasaki SS-19 or equivalent	– – –
Amount:		
Left Front Fork:		
Cylinder Unit	310 mL (10.5 US oz.)	– – –
Outer Tube	345 mL (11.7 US oz.)	(Adjustable Range) 300 ~ 398 mL (10.1 ~ 13.5 US oz.)
Right Front Fork:		
Cylinder Unit	50 mL (1.69 US oz.)	– – –
Outer Tube	270 mL (9.13 US oz.)	– – –
Balance Chamber	5 mL (0.17 US oz.)	– – –
Rear Suspension (Uni-Trak):		
Rear Shock Absorber		
Rebound Damping Adjustment (from the seated position adjuster turned fully clockwise)	(US, CA, AU) 12 clicks counterclockwise (EUR, BR) 14 clicks counterclockwise	(Adjustable Range) 22 clicks
Spring Preload Adjustment (Lower surface of the adjusting nut from the center of the upper mounting hole)	(US, CA, AU) 124.4 mm (4.898 in.) (EUR, BR) 125.4 mm (4.937 in.)	(Adjustable Range) 124.4 ~ 135.3 mm (4.898 ~ 5.327 in.)
Rear Shock Spring Free Length	265 mm (10.4 in.)	260 mm (10.2 in.)
Suspension Oil	Kawasaki SS-25 or equivalent	– – –
Amount	approx. 380 mL (12.8 US oz.)	– – –

Specifications

Item	Standard	Service Limit
Gas Reservoir		
High Speed Compression Damping Adjustment (from the seated position adjuster turned fully clockwise)	(US, CA, AU) 1 3/4 turns out (EUR, BR) 2 turns out	(Adjustable Range) 4 turns out
Low Speed Compression Damping Adjustment (from the seated position adjuster turned fully clockwise)	13 clicks counterclockwise	(Adjustable Range) 19 clicks
Gas Pressure	980 kPa (10.0 kgf/cm², 142 psi)	– – –
Tie-Rod, Rocker Arm		
Sleeve Outside Diameter:		
Tie-rod	19.987 ~ 20.000 mm (0.78689 ~ 0.78740 in.)	19.85 mm (0.7815 in.)
Rocker Arm:		
Large	19.987 ~ 20.000 mm (0.78689 ~ 0.78740 in.)	19.85 mm (0.7815 in.)
Small	15.950 ~ 16.000 mm (0.62795 ~ 0.62992 in.)	15.92 mm (0.6268 in.)
Tie-Rod and Rocker Arm Mounting Bolt Runout	TIR 0.1 mm (0.004 in.) or less	TIR 0.2 mm (0.008 in.)

Special Tools

Oil Seal & Bearing Remover:
57001-1058

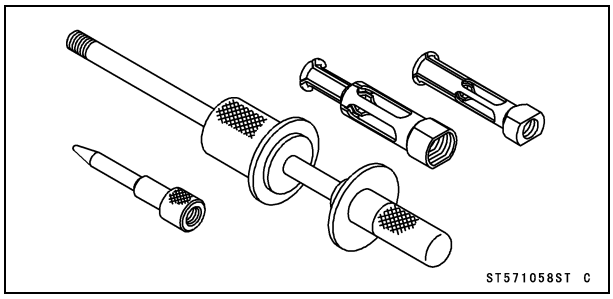

Hook Wrench R37.5, R42:
57001-1101

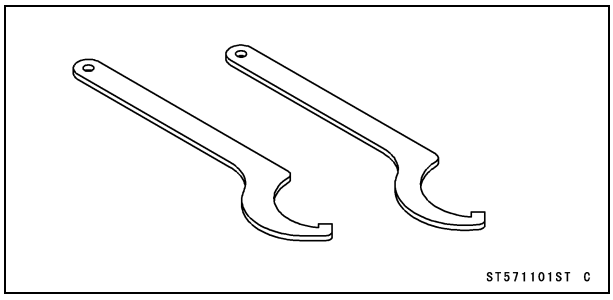

Bearing Driver Set:
57001-1129

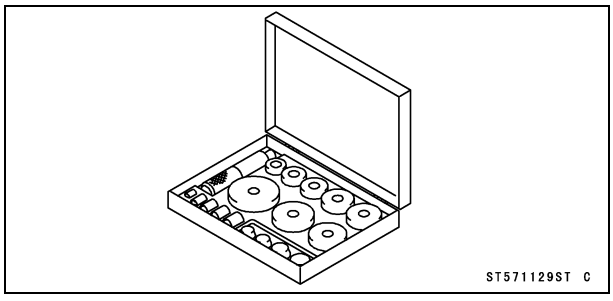

Jack:
57001-1238

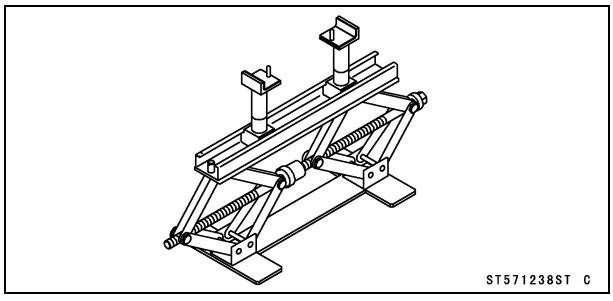

Hook Wrench T=3.2 R37:
57001-1539

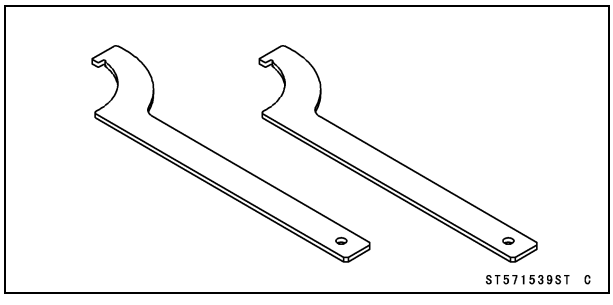

Fork Oil Seal Driver, ϕ49:
57001-1589

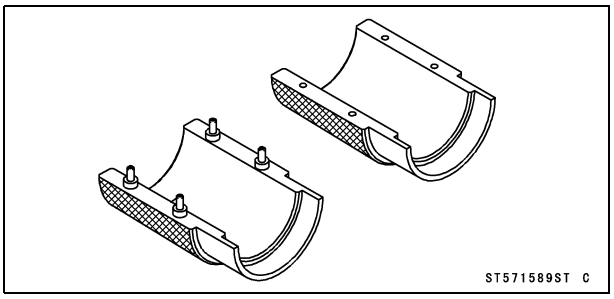

Jack Attachment:
57001-1608

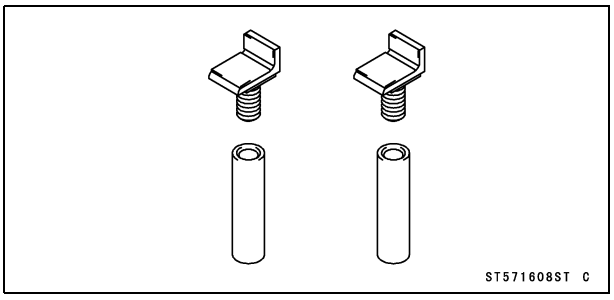

Fork Oil Seal Driver Weight, ϕ48 ~ ϕ54:
57001-1796

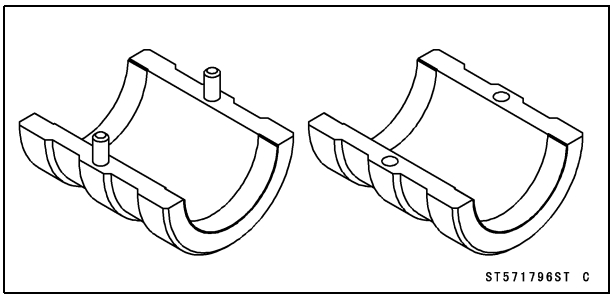

Fork Oil Seal Driver Attachment, ϕ48 ~ ϕ54:
57001-1799

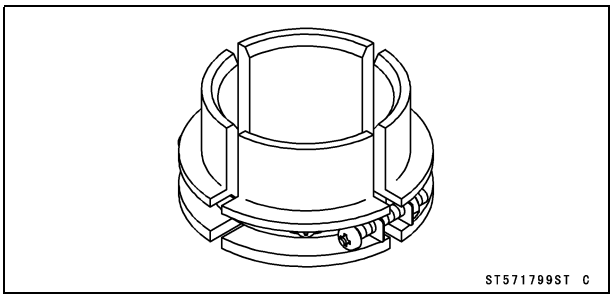

Front Fork

Air Pressure Adjustment (Right Front Fork)

Before riding, adjust the air pressure to the specific value.

- Place the jack under the frame so that the front wheel off the ground.

Special Tools - Jack: 57001-1238
Jack Attachment: 57001-1608

NOTE

○*Do not use the sidestand when adjusting the air pressure.*

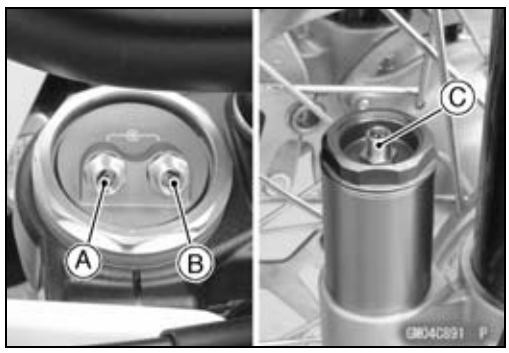

- Remove:
  Air Valve Caps
- Bleed air by pushing down the air valves in the order of balance chamber, outer chamber and inner chamber.
- Adjust the air pressure within the specified range in the order of inner chamber, outer chamber and balance chamber.
  Outer Chamber Air Valve [A]
  Inner Chamber Air Valve [B]
  Balance Chamber Air Valve [C]

Inner Chamber Air Pressure

Standard:	**(US, CA, AU)** **1 200 kPa (12.24 kgf/cm², 174 psi)** **(EUR, BR)** **1 100 kPa (11.21 kgf/cm², 160 psi)**
Adjustable Range:	**600 ~ 1 400 kPa (6.11 ~ 14.28 kgf/cm², 87.0 ~ 203 psi)**

Outer Chamber Air Pressure

Standard:	**100 kPa (1.02 kgf/cm², 14.5 psi)**
Adjustable Range:	**0 ~ 130 kPa (0 ~ 13.3 kgf/cm², 0 ~ 18.9 psi)**

Balance Chamber Air Pressure

Standard:	**(US, CA, AU)** **1 400 kPa (14.28 kgf/cm², 203 psi)** **(EUR, BR)** **1 200 kPa (12.24 kgf/cm², 174 psi)**
Adjustable Range:	**530 ~ 1 500 kPa (5.40 ~ 15.30 kgf/cm², 76.9 ~ 218 psi)**

Recommended Soft Setting

Inner Chamber:	**(US, CA, AU)** **1 100 kPa (11.21 kgf/cm², 160 psi)** **(EUR, BR)** **1 000 kPa (10.20 kgf/cm², 145 psi)**
Outer Chamber:	**100 kPa (1.02 kgf/cm², 14.5 psi)**
Balance Chamber:	**(US, CA, AU)** **1 200 kPa (12.24 kgf/cm², 174 psi)** **(EUR, BR)** **1 100 kPa (11.21 kgf/cm², 160 psi)**

Front Fork

Recommended Hard Setting

Inner Chamber:	**(US, CA, AU)** **1 300 kPa (13.26 kgf/cm², 189 psi)** **(EUR, BR)** **1 200 kPa (12.24 kgf/cm², 174 psi)**
Outer Chamber:	**100 kPa (1.02 kgf/cm², 14.5 psi)**
Balance Chamber:	**(US, CA, AU)** **1 500 kPa (15.30 kgf/cm², 218 psi)** **(EUR, BR)** **1 300 kPa (13.26 kgf/cm², 189 psi)**

⚠ WARNING

When riding and transporting the motorcycle, make sure that the air pressure is within the adjustable range. If used outside the adjustable range, running stability can decrease and cause an accident resulting in serious injury or death.

NOTICE

Do not pressurize the fork to more than adjustable range or the fork may be damaged.

- After air pressure adjustment install the air valve caps.

Compression Damping Adjustment (Left Front Fork)

- Place the jack under the frame so that the front wheel off the ground.

  Special Tools - Jack: 57001-1238
  Jack Attachment: 57001-1608

- To adjust compression damping, turn the adjuster [A] on the base valve assembly with a flat tip screwdriver until you feel a click. Adjust the compression damping to suit you preference under special condition.

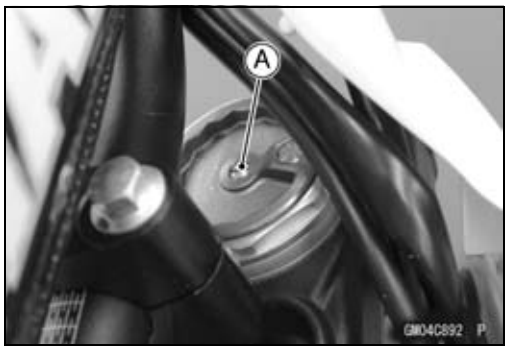

Seated position [A]: adjuster turned fully clockwise.

NOTICE

Do not force the compression damping adjuster beyond the fully seated position, or the adjusting mechanism may be damaged.

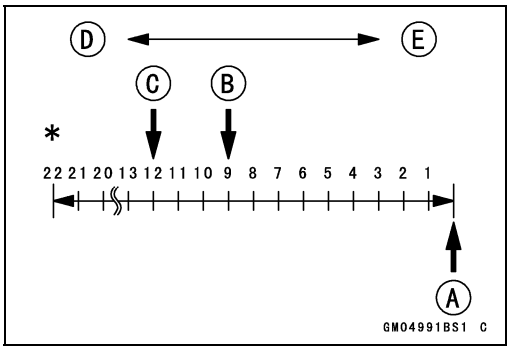

Compression Damping Adjuster Setting

Standard:	**(US, CA, AU) 9 clicks [B]**
	(EUR, BR) 12 clicks [C]
	Softer (Counterclockwise) [D]
	Harder (Clockwise) [E]

*: Although you can turn the adjuster beyond the adjustable range, effecting no changes to damping force, use it within the adjustable range.

Front Fork

Rebound Damping Adjustment (Left Front Fork)

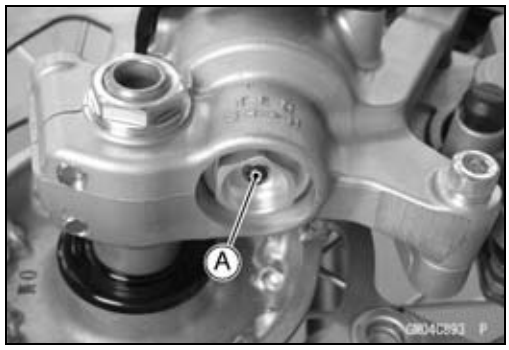

- Place the jack under the frame so that the front wheel off the ground.

  Special Tools - Jack: 57001-1238
  Jack Attachment: 57001-1608

- To adjust rebound damping, turn the adjuster [A] on the left front fork cylinder valve with a flat tip screwdriver until you feel a click. Adjust the rebound damping to suit your preference under special condition.

Seated position [A]: adjuster turned fully clockwise.

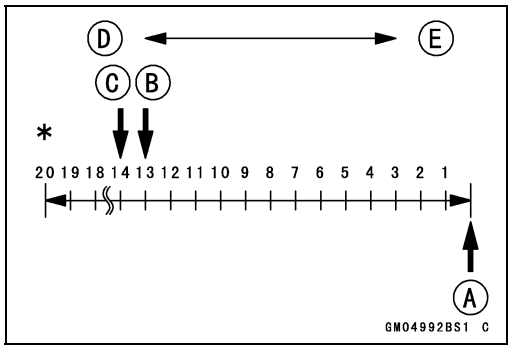

NOTICE
Do not force the rebound damping adjuster beyond the fully seated position, or the adjusting mechanism may be damaged.

Rebound Damping Adjuster Setting

Standard: (US, CA, AU) 13 clicks [B]
(EUR, BR) 14 clicks [C]
Softer (Counterclockwise) [D]
Harder (Clockwise) [E]

*: Although you can turn the adjuster beyond the adjustable range, effecting no changes to damping force, use it within the adjustable range.

Oil Change

- Refer to Front Fork Oil Change in the Periodic Maintenance chapter.

Front Fork Removal

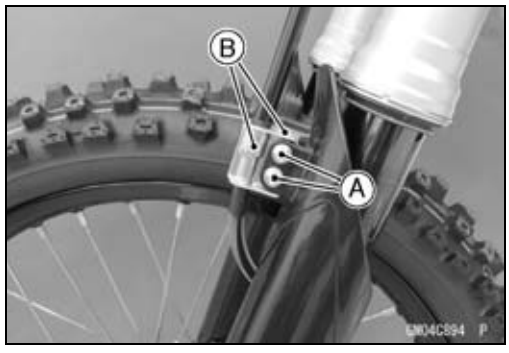

- Remove:
  Number Plate (see Number Plate Removal in the Frame chapter)
  Front Brake Hose Clamp Bolts [A]
  Front Brake Hose Clamps [B]

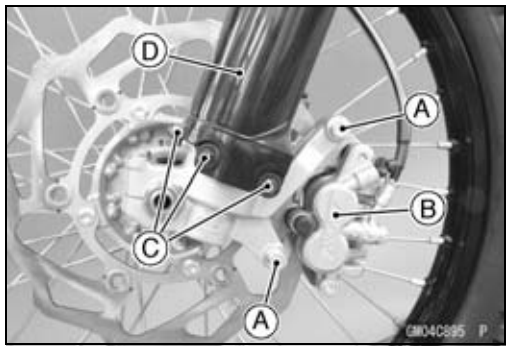

- Remove:
  Front Caliper Mounting Bolts [A]
- Remove the caliper [B] from the fork leg, and rest the caliper on some kind of stand so that it doesn't dangle.
- Remove:
  Front Protector Bolts [C]
  Fork Protector [D]
  Front Wheel (see Front Wheel Removal in the Wheels/Tires chapter)

Front Fork

- Loosen:
  Front Fork Clamp Bolts (Upper) [A]
  Front Fork Clamp Bolts (Lower) [B]

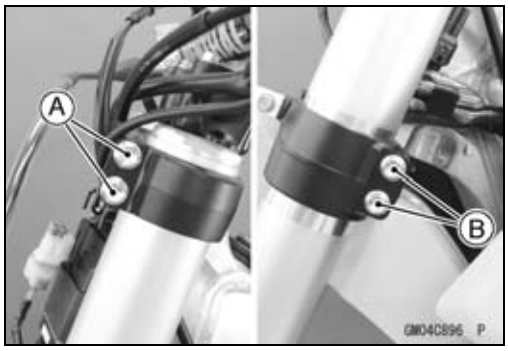

- Remove the front fork.

○With a twisting motion [A], work the fork leg [B] down and out.

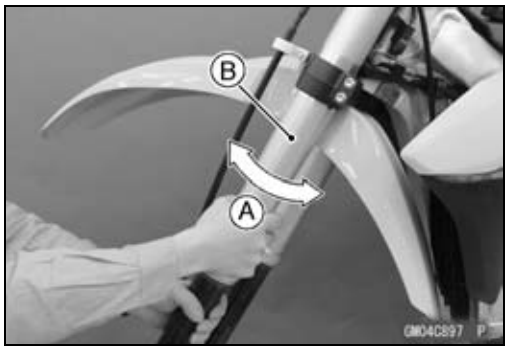

Front Fork Installation

- Install the fork so that the distance [A] between the top end of the outer tube and the upper surface of the steering stem head is specified dimension.

  Standard: 5 mm (0.2 in.)

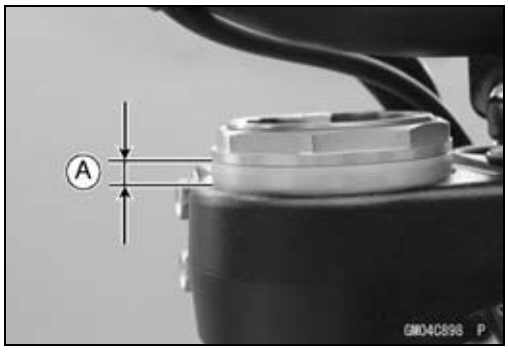

- Tighten:

  Torque - Front Fork Clamp Bolts (Upper): 23 N·m (2.3 kgf·m, 17 ft·lb)
  Front Fork Clamp Bolts (Lower): 23 N·m (2.3 kgf·m, 17 ft·lb)

NOTE

○*Tighten the two clamp bolts alternately two times to ensure even tightening torque.*

- Run the cables and hose according to the Cable, Wire, and Hose Routing section in the Appendix chapter.
- Install the fork protector and front brake hose clamps.
- Tighten:

  Torque - Fork Protector Bolts: 4.0 N·m (0.41 kgf·m, 35 in·lb)
  Front Brake Hose Clamp Bolts: 7.0 N·m (0.71 kgf·m, 62 in·lb)

- Install the removed parts (see appropriate chapters).

Front Fork

Front Fork Disassembly

- Drain the folk oil (see Front Fork Oil Change in the Periodic Maintenance chapter).
- Remove the dust seal [A] and the retaining ring [B].

○Be careful not to scratch the inner tube.

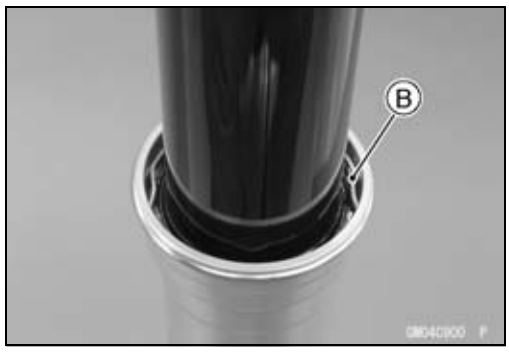

- Grasp the outer tube and stroke [A] the inner tube several times. The shock to fork seal separates the inner tube from the outer tube.

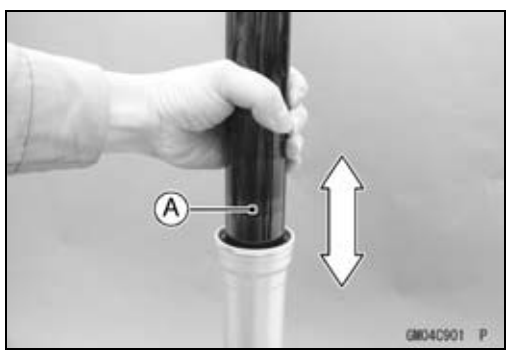

- Remove the following parts from the inner tube.
  Guide Bushes [A]
  Washer [B]
  Oil Seal [C]
  Retaining Ring [D]
  Dust Seal [E]

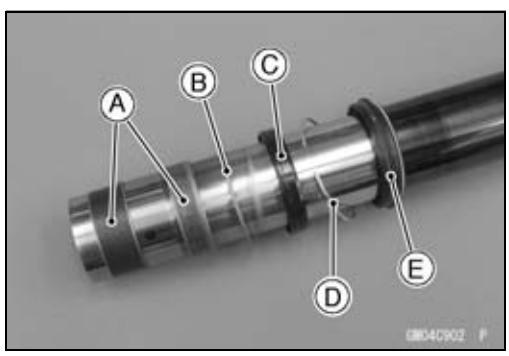

Front Fork Assembly

- When the fork tubes are not disassembled, hold the fork inverted position for more than 20 minutes to allow the fork oil to fully drain.

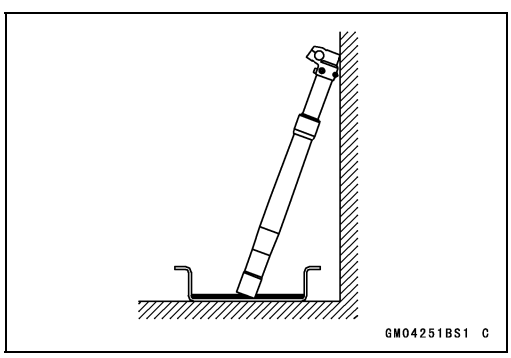

Front Fork

- Replace the following parts with new ones.
  Dust Seal [A]
  Retaining Ring [B]
  Oil Seal [C]
  Guide Bushes [D]
- Place an oil coated plastic bag [E] over the end of the inner tube to protect the oil seal.

○The inner tube guide bush groove has a sharp edge [F] that cut out the sealing lip of the seals as they are pushed down over the inner tube.

- Install in order these parts on the inner tube.

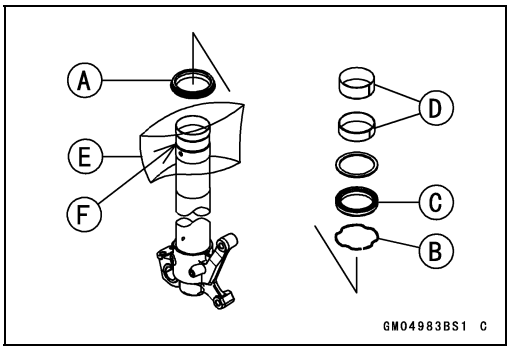

- Tap the oil seal with the oil seal driver [A] to install the outer guide bush.

Special Tools - Fork Oil Seal Driver, ϕ49: 57001-1589 or
Fork Oil Seal Driver Weight, ϕ48 ~ ϕ54: 57001-1796
Fork Oil Seal Driver Attachment, ϕ48 ~ ϕ54: 57001-1799

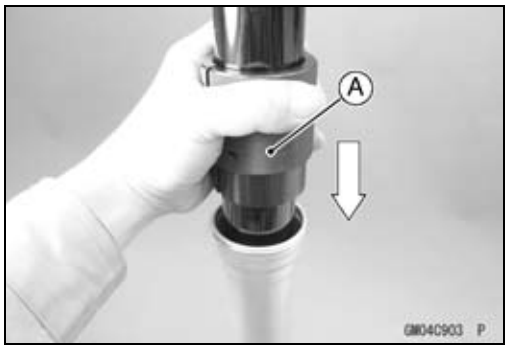

- Install the retaining ring to the outer tube.
- Push the dust seal into the outer tube, and put the spring band on the dust seal.
- Pour the fork oil (see Front Fork Oil Change in the Periodic Maintenance chapter).

Adjuster Assembly Inspection

- Inspect the adjuster assembly [A] and push rod [B] for damage.

★If they are damaged, replace them with new ones.

- Replace the O-ring [C] on the adjuster assembly with a new one.

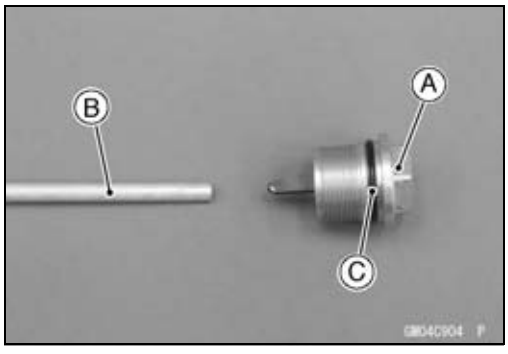

Base Valve Assembly Inspection

- Inspect the threads portion [A] and spring [B] of base valve assembly [C] for damage.

★If they are damaged, replace base valve assembly with a new one.

- Replace the O-rings [D] with new ones.

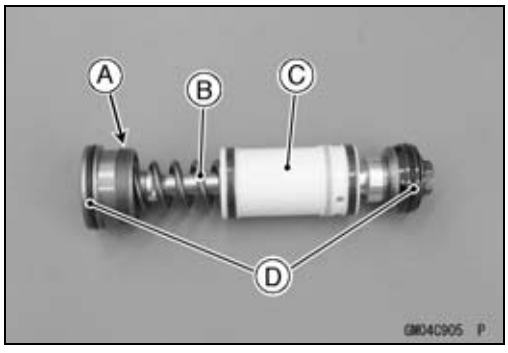

Front Fork

Cylinder Unit Inspection

- Inspect the piston rod [A] of cylinder unit [B] for scratches or bending.

★If it has scratches or is bent, replace cylinder unit with a new one.

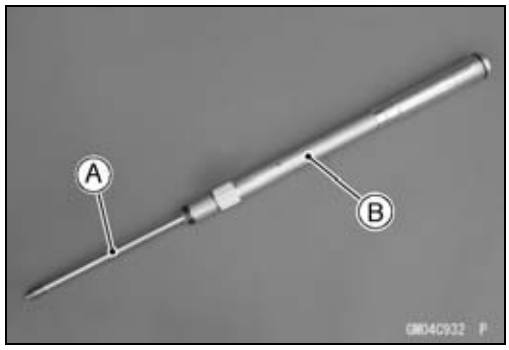

Inner Tube Inspection

- Visually inspect the inner tube [A].

★If there is any damage, replace the inner tube. Since damage to the inner tube damages the oil seal and dust seal, replace the oil seal and dust seal whenever the inner tube is replaced.

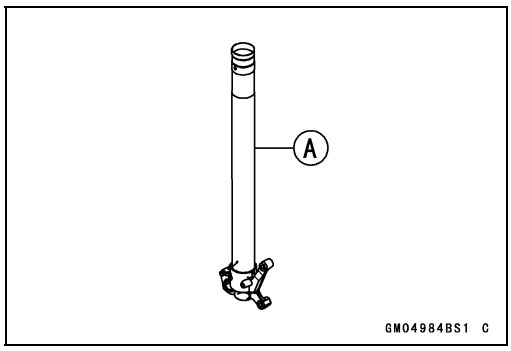

NOTICE
If the inner tube is badly bent or creased, replace it. Excessive bending, followed by subsequent straightening, can weaken the inner tube.

- Temporarily assemble the inner tube [A] and outer tube [B], and pump them back and forth manually to check for smooth operation.

★If you feel binding or catching, the inner and outer tubes must be replaced.

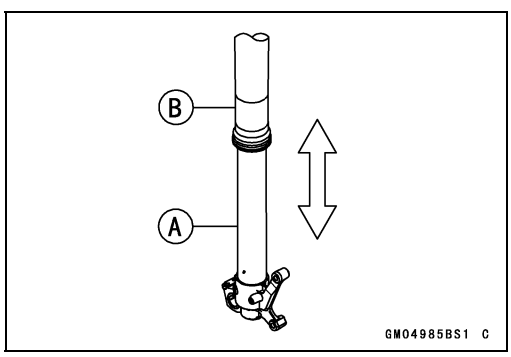

⚠ WARNING
A straightened inner or outer fork tube may fall in use, possibly causing an accident resulting in serious injury or death. Replace a badly bent or damaged inner or outer tube and inspect the other tube carefully before reusing it.

Dust Seal Inspection

- Inspect the dust seal [A] for any signs of deterioration or damage.

★Replace it if necessary.

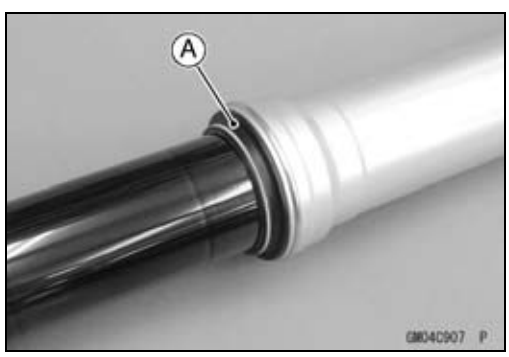

Rear Shock Absorber

To suit to various riding conditions, the spring preload of the shock absorber can be adjusted or the spring can be replaced with an optional one. Also the damping force can be adjusted easily so changing oil viscosity unnecessary.

Rebound Damping Adjustment

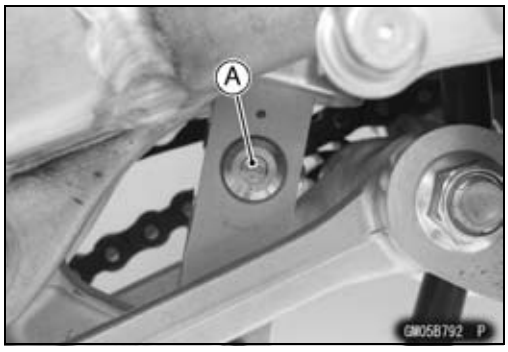

- Turn the rebound damping adjuster [A] on the rear shock absorber lower end with a flat tip screwdriver until you feel a click.

★If the damper setting feels too soft or too stiff, adjust it in accordance with the following table.

Seated position [A]: adjuster turned fully clockwise.

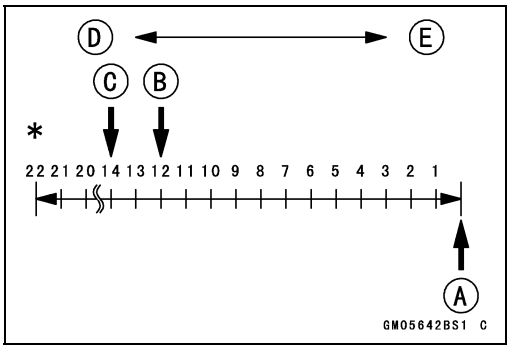

NOTICE
Do not force the rebound damping force adjuster beyond the fully seated position, or the adjusting mechanism may be damaged.

Rebound Damping Adjuster Setting

Standard: (US, CA, AU) 12 clicks [B]
(EUR, BR) 14 clicks [C]
Softer (Counterclockwise) [D]
Harder (Clockwise) [E]

*: Although you can turn the adjuster beyond the adjustable range, effecting no changes to damping force, use it within the adjustable range.

NOTE

○*Adjustment of the rebound damping adjuster for the rear suspension will slightly affect the compression damping force. Always make any damping adjustments in small steps and test their effects before using them in competition.*

Compression Damping Adjustment

There are two adjustments you can make to the rear shock absorber gas reservoir.

High Speed Compression Damping Adjuster [A]
Low Speed Compression Damping Adjuster [B]

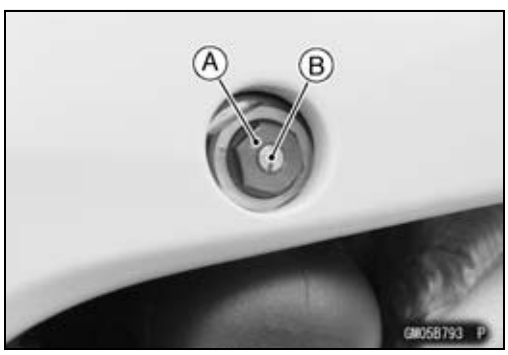

- Adjust the high speed compression damping, turn the high speed compression damping adjuster with a 14 mm socket wrench.

★If the damping feels too soft or too stiff, adjust it in accordance with the following table.

Rear Shock Absorber

Seated position [A]: adjuster turned fully clockwise.

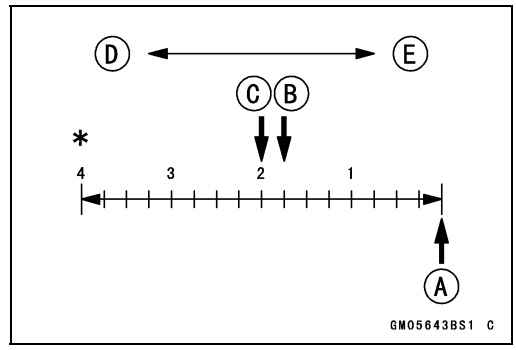

NOTICE
Do not force the compression damping force adjuster beyond the fully seated position, or the adjusting mechanism may be damaged.

High Speed Compression Damping Adjuster Setting

Standard: (US, CA, AU) 1 3/4 turns out [B]
(EUR, BR) 2 turns out [C]
Softer (counterclockwise) [D]
Harder (clockwise) [E]

*: Although you can turn the adjuster beyond the adjustable range, effecting no changes to damping force, use it within the adjustable range.

- Adjust the low speed compression damping, turn the low speed compression damping adjuster with a flat tip screwdriver.

★If the damping feels too soft or too stiff, adjust it in accordance with the following table.

Seated position [A]: adjuster turned fully clockwise.

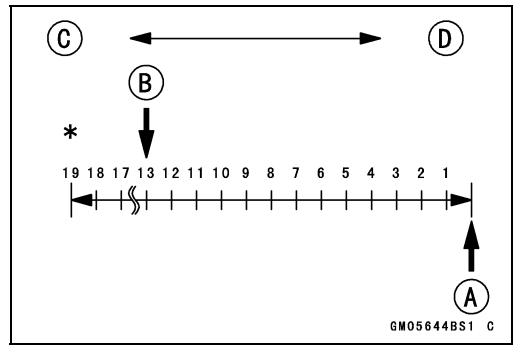

Low Speed Compression Damping Adjuster Setting

Standard: 13 clicks [B]
Softer (counterclockwise) [C]
Harder (clockwise) [D]

*: Although you can turn the adjuster beyond the adjustable range, effecting no changes to damping force, use it within the adjustable range.

NOTE

○*Adjustment of the compression damping adjusters for the rear suspension will slightly affect the rebound damping force. Always make any damping adjustments in small steps and test their effects before using them in competition.*

Spring Preload Adjustment

- Remove:
  Muffler Body (see Muffler Body Removal in the Engine Top End chapter)
  Rear Frame (see Rear Frame Removal in the Frame chapter)

- Using the jack under the frame, raise the rear wheel off the ground.

Special Tools - Jack: 57001-1238
Jack Attachment: 57001-1608

Rear Shock Absorber

- Using the hook wrenches [A] (R42, 57001-1103 and 57001-1539), loosen the locknut [B].

○The hook wrench (R42, 57001-1103) is in the hook wrench R37.5, R42: 57001-1101.

Special Tools - Hook Wrench R37.5, R42: 57001-1101
Hook Wrench T=3.2 R37: 57001-1539

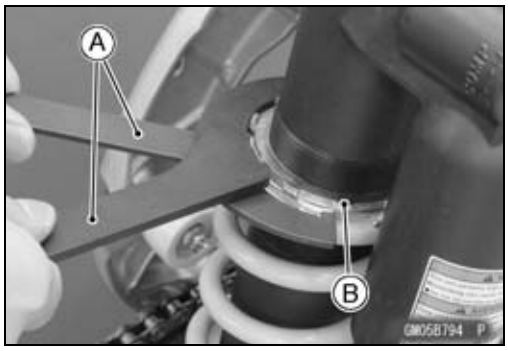

- Using the hook wrench [A] (57001-1539), turn the adjusting nut [B] as required. Turning the adjusting nut downward marks the spring action harder and upward softer.

Special Tool - Hook Wrench T=3.2 R37: 57001-1539

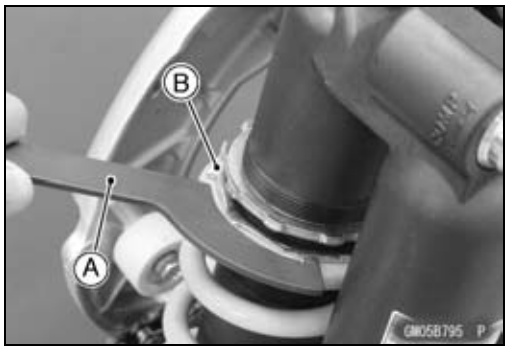

Spring Preload Adjustment
(Lower surface of the adjusting nut from the center of the upper mounting hole [A])

Standard:	**(US, CA , AU) 124.4 mm (4.898 in.)**
	(EUR, BR) 125.4 mm (4.937 in.)
Adjustable Range:	**124.4 ~ 135.3 mm (4.898 ~ 5.327 in.)**

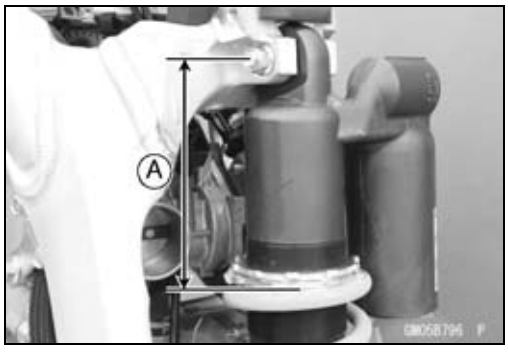

- Tighten the locknut securely.
- After adjusting, move the spring up and down to make sure that the spring is seated.
- Install the removed parts (see appropriate chapters).

Rear Shock Absorber Spring Tension Inspection

- Since the spring becomes shorter as it weakens, check its free length [A] to determine its condition.

Shock Absorber Spring Free Length

Standard:	**265 mm (10.4 in.)**
Service Limit:	**260 mm (10.2 in.)**

★If the free length falls below the service limit, replace the spring.

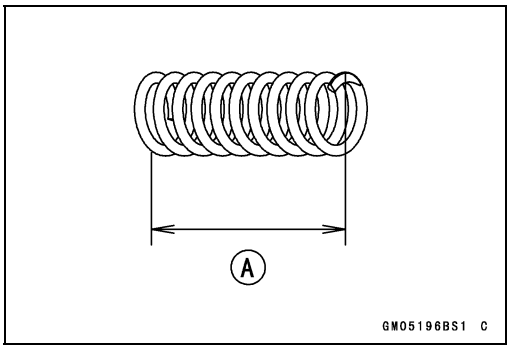

Rear Shock Absorber Removal

- Remove:
  Muffler Body (see Muffler Body Removal in the Engine Top End chapter)
  Rear Frame (see Rear Frame Removal in the Frame chapter)
- Using the jack under the frame, raise the rear wheel off the ground.

Special Tools - Jack: 57001-1238
Jack Attachment: 57001-1608

Rear Shock Absorber

NOTICE

When pulling out the mounting bolts, lift the rear wheel slightly. Forcing or tapping on a bolt could damage the bolt, sleeve, and bearing

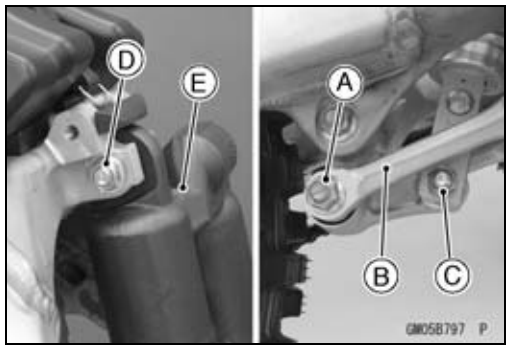

- Remove the rear tie-rod mounting bolt and nut [A] and turn the tie-rod [B] downward.
- Remove the rear shock absorber mounting bolt and nut (lower) [C].
- Remove the rear shock absorber mounting bolt and nut (upper) [D].
- Remove the rear shock absorber [E].

Rear Shock Absorber Installation

- Apply plenty of grease to the needle bearings and grease seals.
- Replace:
  Rear Shock Absorber Nut (Upper)
  Rear Shock Absorber Nut (Lower)
  Rear Tie-Rod Mounting Nut
- Install the rear shock absorber.
- Tighten:

Torque - Rear Shock Absorber Nut (Upper): 40 N·m (4.1 kgf·m, 30 ft·lb)
Rear Shock Absorber Nut (Lower): 35 N·m (3.6 kgf·m, 26 ft·lb)
Rear Tie-Rod Mounting Nut: 60 N·m (6.1 kgf·m, 44 ft·lb)

- Install removed parts (see appropriate chapters).

Rear Shock Absorber Spring Replacement

In addition to the standard spring, heavy and light springs are available. If the standard spring is improper for your purpose, select a proper one according to the rider's weight or course conditions.

- Remove:
  Rear Shock Absorber (see Rear Shock Absorber Removal)
- Clean the threaded portion on the upper of the rear shock absorber.

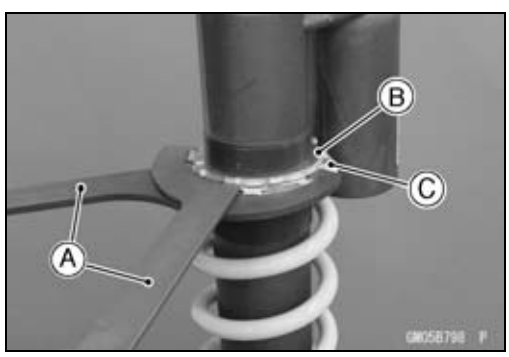

- Hold the lower end of the rear shock absorber in a vise with soft jaws or a heavy cloth.
- Using the hook wrenches [A] (R42, 57001-1103 and 57001-1539), loosen the locknut [B] and turn the adjusting nut [C] all way up.

○The hook wrench (R42, 57001-1103) is in the hook wrench R37.5, R42: 57001-1101.

Special Tools - Hook Wrench R37.5, R42: 57001-1101
Hook Wrench T=3.2 R37: 57001-1539

- Remove the rear shock absorber from the vise.

Rear Shock Absorber

- Put the rear shock absorber upside down, and hold the upper end of the rear shock absorber in a vise with soft jaws or a heavy cloth.
- Slide the spring seat [A].
- Remove the circlip [B] from the shock absorber and lift off the spring seat and spring [C].
- Remove the rear shock absorber from the vise.

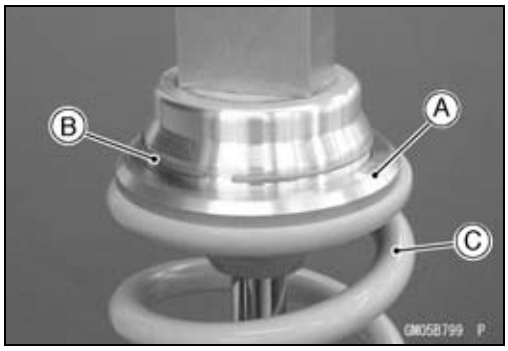

- Exchange the spring for an optional part.

○Install the spring so that large diameter end [A] faces upward.

- Replace the circlip with a new one.
- Install the spring seat and new circlip.
- Adjust the spring preload (see Spring Preload Adjustment).
- Install the rear shock absorber (see Rear Shock Absorber Installation).
- Install the removed parts (see appropriate chapters).

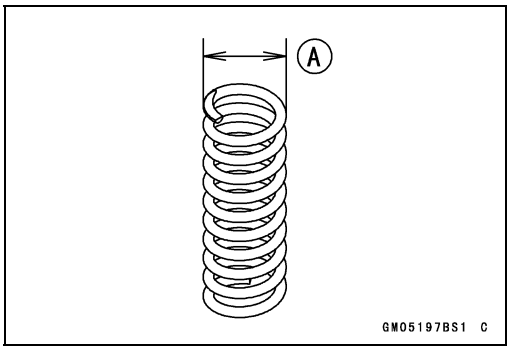

Rear Shock Absorber Disassembly

- Remove:
  Piston Rod Assembly (see Rear Shock Absorber Oil Change in the Periodic Maintenance chapter)
- Using the grinder, shave off the stake portion [A] of the piston rod.

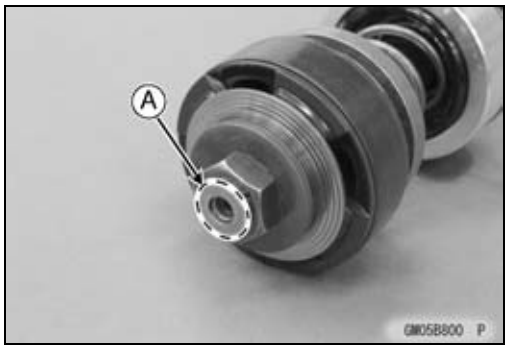

- Hold the lower of the piston rod assembly in a vise with soft jaws or heavy cloth.
- Remove the locknut [A] and discard it.

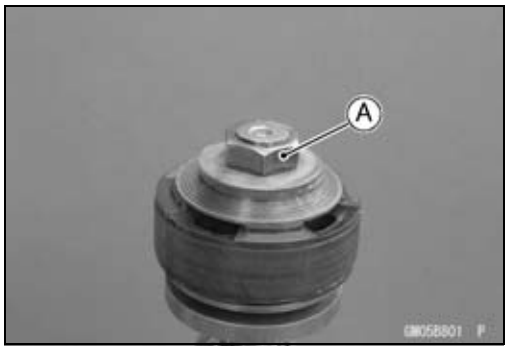

- Remove the piston rod assembly from the vise.
- Remove the piston assembly [A].

○Be careful not to disassemble it.

○Stick a suitable rod into the piston assembly and leave it until being reinstalled.

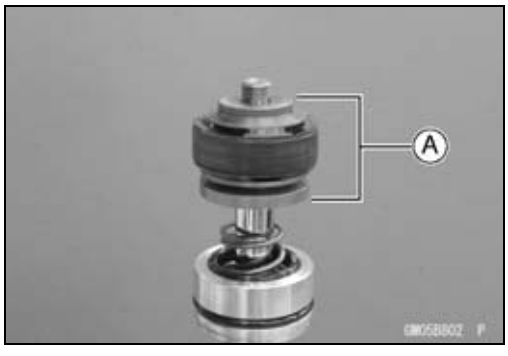

Rear Shock Absorber

- Inspect the slide bushing [A].
★If the bushing is damaged, replace it.
○Cut the slide bushing.
- Replace the O-rings [B] with new ones.
- Install the O-rings and a new bushing on the piston.

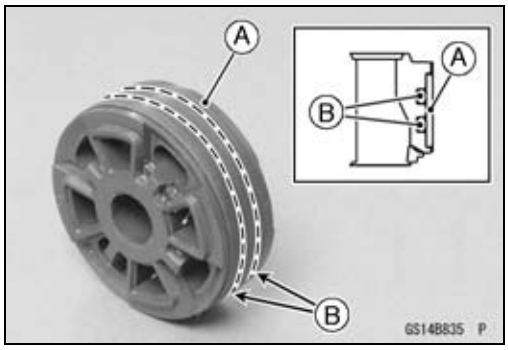

- Wrap the threads [A] of the piston rod with tape.
- Remove the oil seal assembly [B].

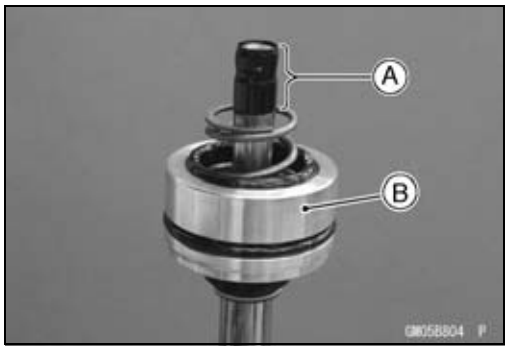

- Remove the O-ring [A] and spring [B].

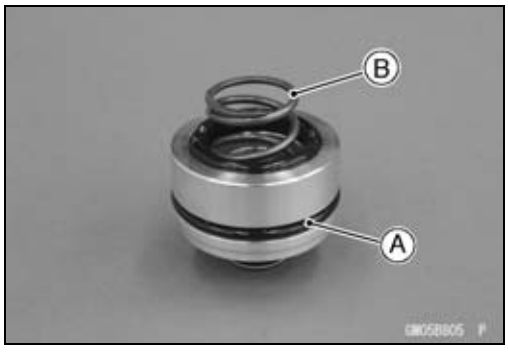

- Remove the rebound rubber [A] out of its groove [B].
- Remove:
  Collar [C]
  Spring Holder [D]

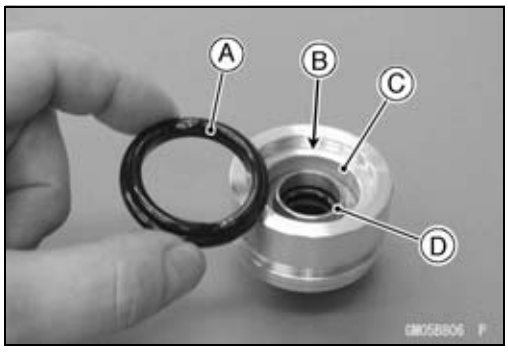

- Remove:
  Oil Seal [A]
  Washer [B]

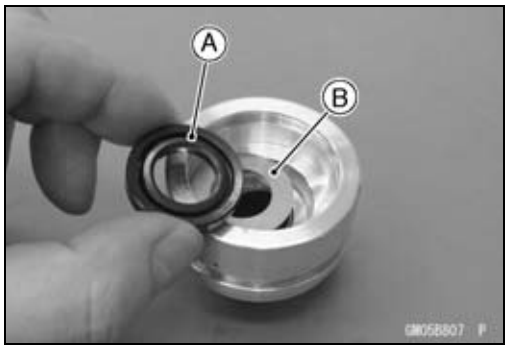

Rear Shock Absorber

- Remove:
  Oil Seal [A]

NOTICE
To avoid damage to the surfaces of the oil seal assembly body [B], cover the screwdriver [C] with the cloth [D].

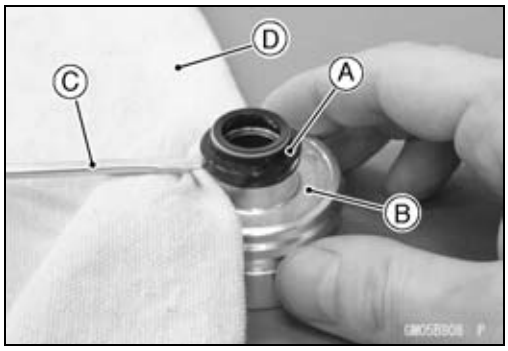

- Remove:
  Stopper [A]
  Damper [B]
  Damper Holder [C]

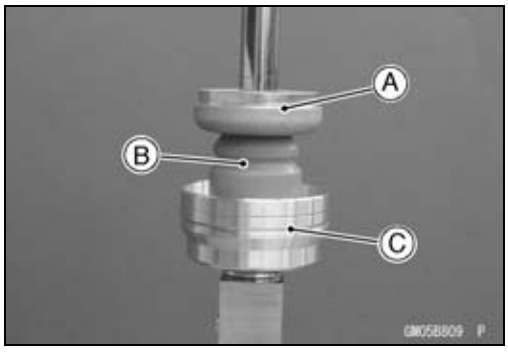

- Inspect the piston rod sliding surface [A].

★If the sliding surface is scratches or distortion, replace it.

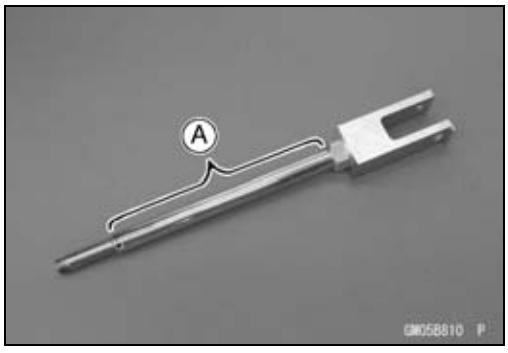

- Hold the lower of the piston rod assembly in a vise with soft jaws or heavy cloth.
- Make the threads of the piston rod end using the die [A].
  Die: ϕ12 × 1.25 mm
- Clean all parts with solvent and dry them with compressed air.

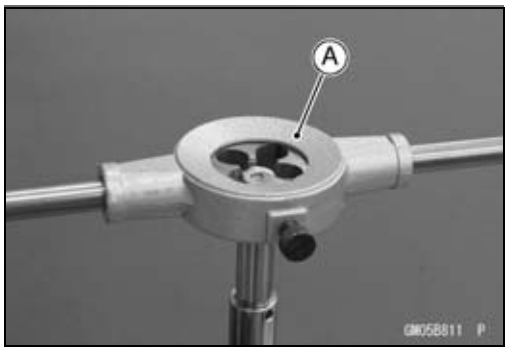

Rear Shock Absorber Assembly

- Install:
  Damper Holder [A]
  Damper [B]
  Stopper [C]

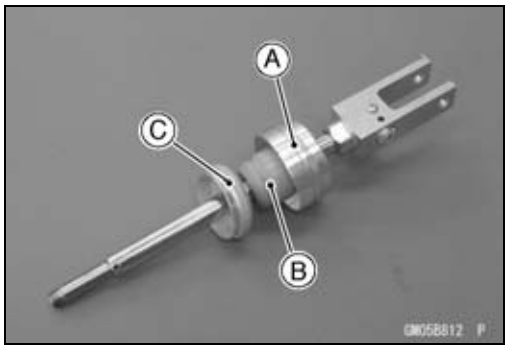

Rear Shock Absorber

- Replace the following parts with new ones.
  Oil Seals
  Rebound Rubber (if damaged)
  O-ring
- Assemble the oil seal assembly as shown.
  Oil Seal [A]
  Oil Seal [B]
  Spring Holder [C]
  Collar [D]
  Rebound Rubber [E]
  Spring [F]
  O-ring [G]

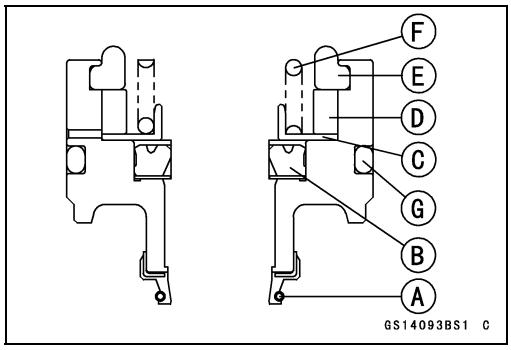

- Wrap the threads of the piston rod with tape [A].
- Apply thin coat of rear shock oil to the sliding surface of the piston rod.
- Insert the oil seal assembly [B].

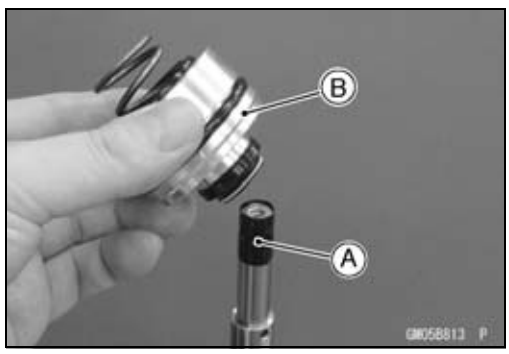

- Remove the tape from piston rod.
- Install the piston assembly [A] so that the thick side of the stopper [B] faces downward.

NOTE

○*Be careful not to change the original positions.*

- Install the new piston rod locknut [C].
- Tighten:

Torque - Piston Rod Locknut: 37 N·m (3.8 kgf·m, 27 ft·lb)

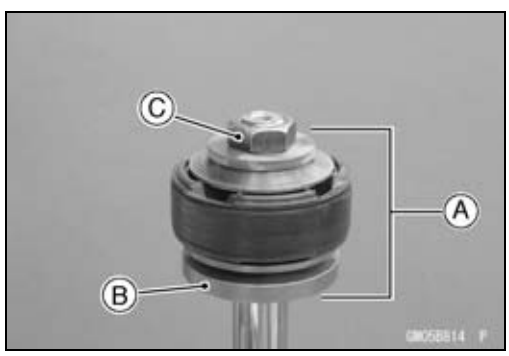

- Stake the end of the piston rod with the chisel [A].
- Check the oil seal assembly moving smoothly on the rod.
- Install the removed parts (see appropriate chapters).

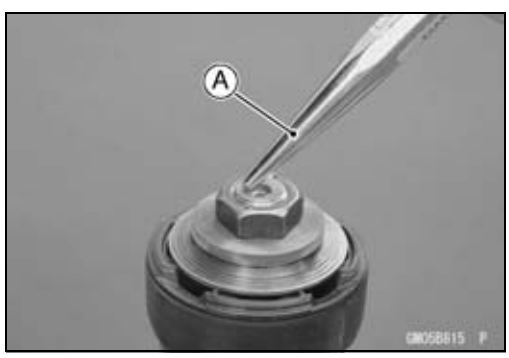

Rear Shock Absorber Oil Change

- Refer to the Rear Shock Absorber Oil Change in the Periodic Maintenance chapter.

Rear Shock Absorber

Rear Shock Absorber Inspection

- Remove the rear shock absorber (see Rear Shock Absorber Removal).
- Visually inspect the following items.
  Oil Leakage
  Crack or Dent

★If there is any damage to the rear shock absorber, replace it.

- Visually inspect the oil seal [A].

★If it show any signs of damage, replace it.

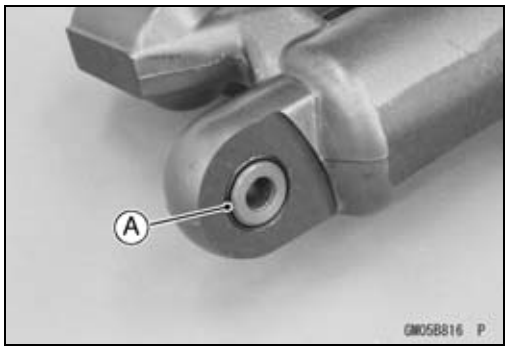

Rear Shock Absorber Scrapping

⚠ WARNING

Pressurized nitrogen may explode when heated. The rear shock contains nitrogen gas. To avoid an explosion, do not incinerate the shock body without first releasing the nitrogen and removing the shraeder valve.

- Remove the rear shock absorber (see Rear Shock Absorber Removal).
- Insert a suitable tool into the gas reservoir cap hole [A] to release the nitrogen gas.

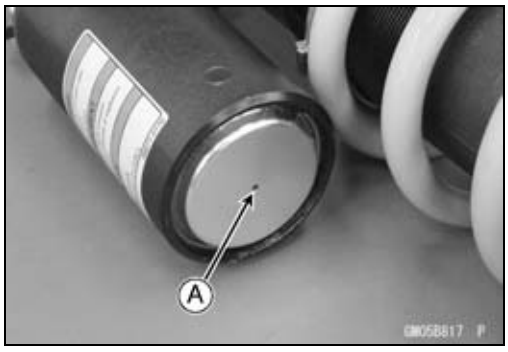

Swingarm

Swingarm Removal

- Remove:
  Rear Wheel (see Rear Wheel Removal in the Wheels/Tires chapter)
  Rear Flap (see Rear Flap Removal in the Frame chapter)
  Rear Brake Hose Clamp Screws [A]
  Rear Brake Hose Clamps [B]

○Put the caliper on suitable stand so that it does not dangle.

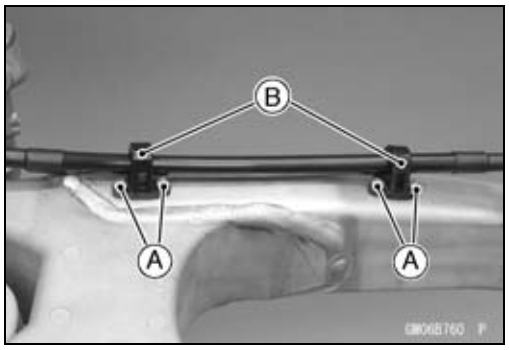

- Remove:
  Chain Guide Plate Bolts [A] and Nuts [B]
  Chain Guide Plate [C]
  Chain Guide [D]

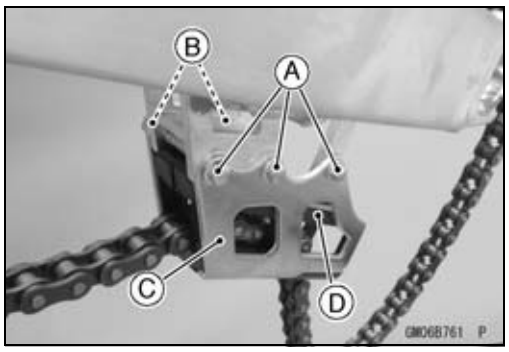

- Remove the rocker arm pivot nut [A] and bolt [B].

NOTICE
When pulling out the mounting bolts, lift the swingarm slightly. Forcing or tapping on a bolt could damage the bolt, sleeve, and bearing.

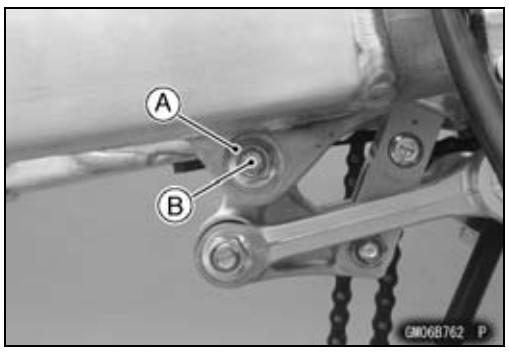

- Remove:
  Brake Pedal Bolt [A] and Washer
  Brake Pedal Return Spring [B]
  Brake Pedal [C]

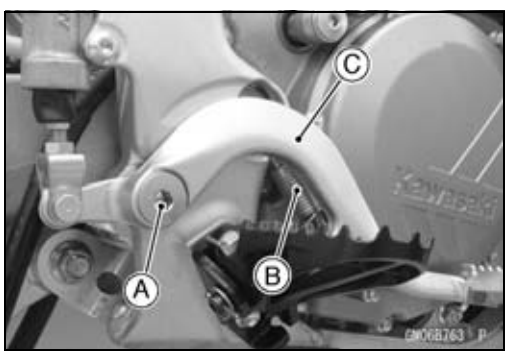

- Remove the swingarm pivot shaft nut [A] and washer.
- Pull out the swingarm pivot shaft [B], and remove the swingarm [C].

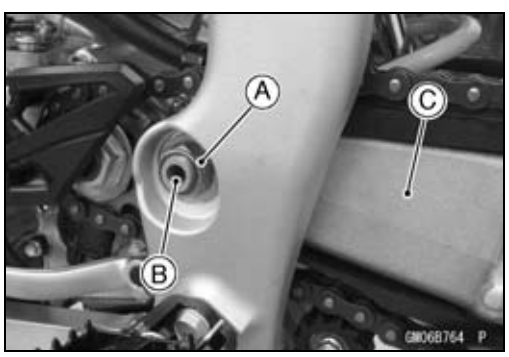

Swingarm

- Remove the chain slipper screws [A] and collars.
- Remove the chain slipper [B] from the swingarm.

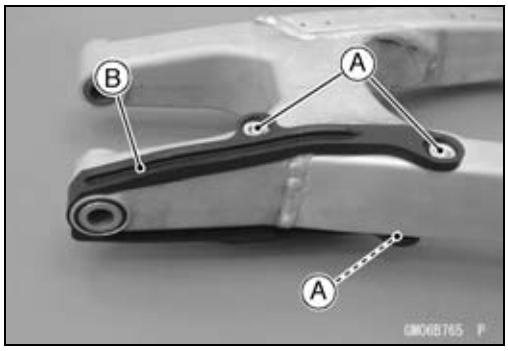

Swingarm Installation

- Install the chain slipper [A] and collars.
- Apply a non-permanent locking agent to the chain slipper screws.
- Tighten the chain slipper screws following the specified tightening sequence [1 ~ 3].

Torque - Chain Slipper Screws: 2.5 N·m (0.25 kgf·m, 22 in·lb)

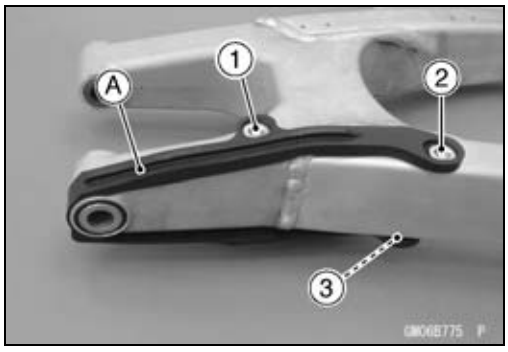

- Apply plenty of grease to the needle bearings and grease seals.
- Replace the following parts with new ones.
  Swingarm Pivot Shaft Nut
  Rocker Arm Pivot Nut
- Install the swingarm.
- Tighten:

Torque - Swingarm Pivot Shaft Nut: 100 N·m (10.2 kgf·m, 73.8 ft·lb)
Rocker Arm Pivot Nut: 60 N·m (6.1 kgf·m, 44 ft·lb)

- Install the chain guide plate and chain guide.
- Tighten:

Torque - Chain Guide Plate Nuts: 8.0 N·m (0.82 kgf·m, 71 in·lb)
Chain Guide Plate Bolt: 8.0 N·m (0.82 kgf·m, 71 in·lb)

- Install the removed parts (see appropriate chapters).

Swingarm Bearing Removal

- Remove:
  Swingarm (see Swingarm Removal)
  Collars [A]
  Grease Seals [B]
  Sleeves [C]
  Needle Bearings [D]
- Remove the needle bearings [E] using the oil seal & bearing remover.

Special Tool - Oil Seal & Bearing Remover: 57001-1058

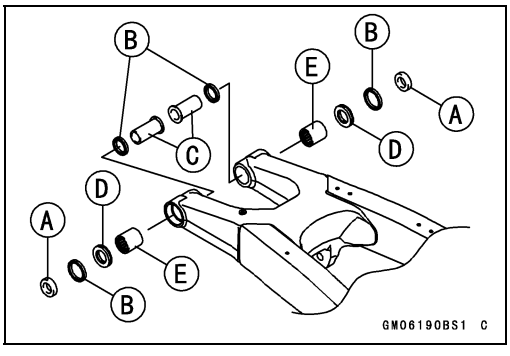

Swingarm

Swingarm Bearing Installation

- Replace the needle bearings and grease seals with new ones.
- Install the needle bearing [A] and grease seal [B] as shown.
  Flush Surface [C]
  1.5 mm (0.059 in.) [D]

NOTE

○*Install the needle bearings so that the manufacture's marks face out.*

○*Install the grease seals so that the deep groove side of the rip to the needle bearings.*

Special Tool - Bearing Driver Set: 57001-1129

- Install the needle bearing [E] and grease seal [F].
- Apply plenty of grease to the needle bearings and grease seals.
- Install the sleeve [G] and collar [H].

○The installation procedure is the same as the counter side.

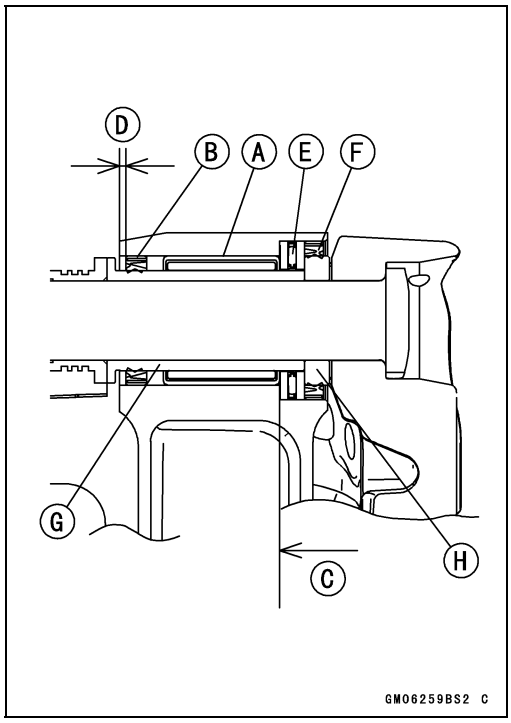

Drive Chain Guide, Guide Roller, Chain Slipper Wear Inspection

- Visually inspect the drive chain guide [A] and replace it if excessively worn or damaged.

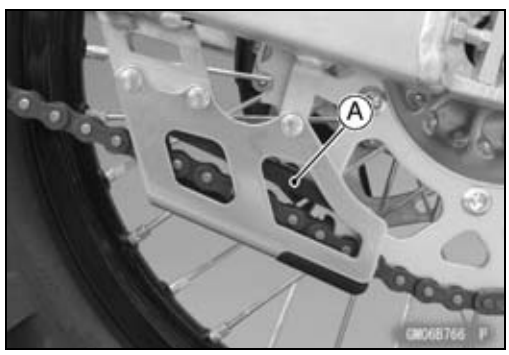

- Visually inspect the upper and lower chain guide rollers [A] and replace them if excessively worn or damaged.

- Visually inspect the chain slipper [A] on the swingarm and replace it if excessively worn or damaged.

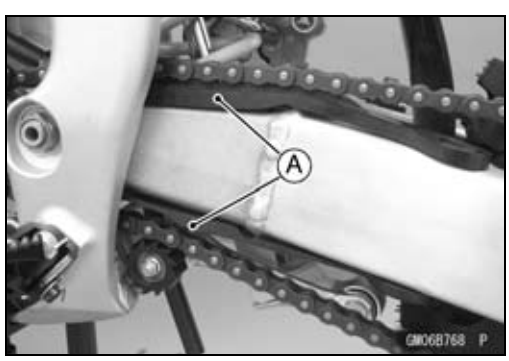

Swingarm

Swingarm Bearing, Sleeve Inspection

NOTICE
Do not remove the bearings for inspection. Removal may damage them.

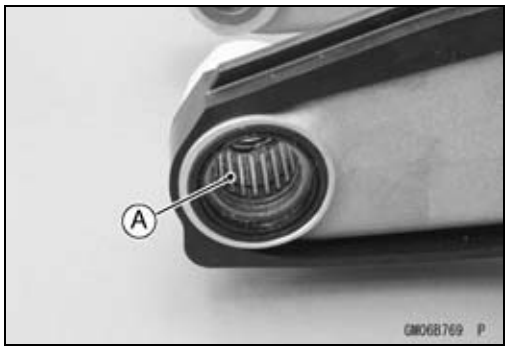

● Inspect the needle bearing [A] installed in the swingarm.

○The rollers in a bearing normally wear very little, and wear is difficult to measure. Instead of measuring, visually inspect the bearing for abrasion, discoloration, or other damage.

★If the needle bearing and sleeve show any signs of abnormal wear, discoloration, or damage, replace them as a set.

Tie-Rod, Rocker Arm

Tie-Rod Removal

- Using the jack under the frame, raise the rear wheel off the ground.

  Special Tools - Jack: 57001-1238
  Jack Attachment: 57001-1608

- Remove:
  Lower Chain Guide Roller Nut [A]
  Lower Chain Guide Roller [B] and Collar

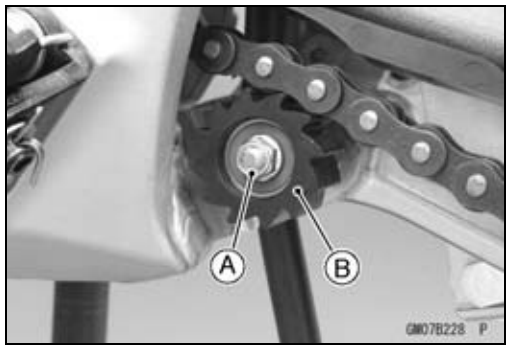

- Remove:
  Rear Tie-Rod Mounting Bolt and Nut [A]
  Front Tie-Rod Mounting Bolt and Nut [B]
  Tie-Rod [C]

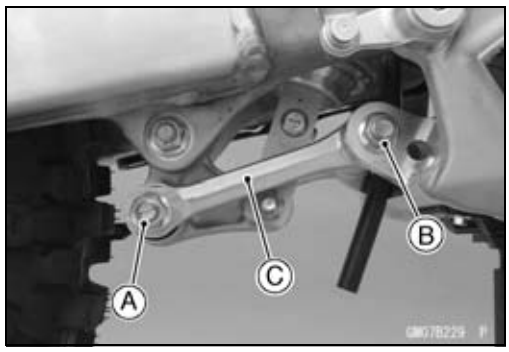

NOTICE
When pulling out the mounting bolts, lift the rear wheel slightly. Forcing or tapping on a bolt could damage the bolt, sleeve, and bearing.

Tie-Rod Installation

- Replace the following parts with new ones.
  Tie-Rod Mounting Nuts
  Lower Chain Guide Roller Nut
- Apply plenty of grease to the needle bearings and grease seals.
- Check that collars are in place on the tie-rod.
- Install the tie-rod.
- Tighten:

  Torque - Tie-Rod Mounting Nuts: 60 N·m (6.1 kgf·m, 44 ft·lb)

- Install the collar [A].
- Install the lower chain guide roller, and tighten the nut.
- Tighten:

  Torque - Lower Chain Guide Roller Nut: 8.0 N·m (0.82 kgf·m, 71 in·lb)

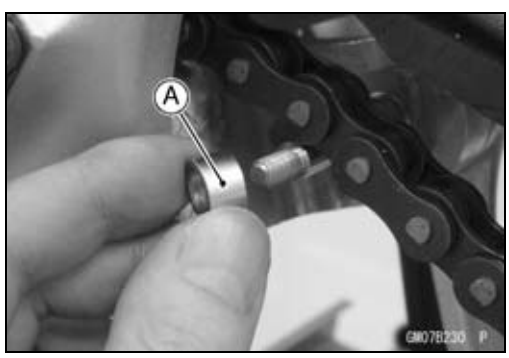

Rocker Arm Removal

- Using the jack under the frame, raise the rear wheel off the ground.

  Special Tools - Jack: 57001-1238
  Jack Attachment: 57001-1608

Tie-Rod, Rocker Arm

- Remove:
  Rear Tie-Rod Mounting Bolt and Nut [A]
  Rear Shock Absorber Mounting Bolt and Nut (Lower) [B]
  Rocker Arm Pivot Bolt and Nut [C]
  Rocker Arm [D]

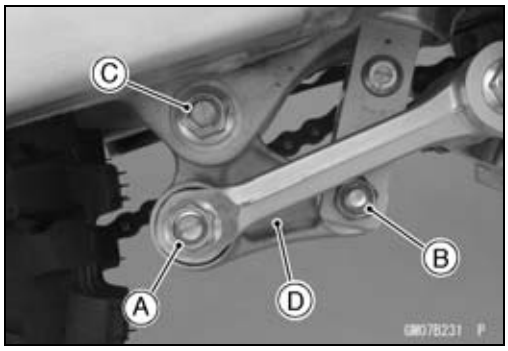

NOTICE
When pulling out the mounting bolts, lift the rear wheel slightly. Forcing or tapping on bolt could damage the bolt, sleeve, and bearing.

Rocker Arm Installation

- Replace the following parts with new ones.
  Rear Shock Absorber Nut (Lower)
  Rocker Arm Pivot Nut
  Tie-Rod Mounting Nut
- Apply plenty of grease to the needle bearings and grease seals.
- Check that collars are in place on the rocker arm.
- Install the rocker arm.
- Tighten:

Torque - Rear Shock Absorber Nut (Lower): 35 N·m (3.6 kgf·m, 26 ft·lb)
Rocker Arm Pivot Nut: 60 N·m (6.1 kgf·m, 44 ft·lb)
Tie-Rod Mounting Nut: 60 N·m (6.1 kgf·m, 44 ft·lb)

Tie-Rod and Rocker Arm Bearing Removal

- Remove:
  Tie-Rod (see Tie-Rod Removal)
  Rocker Arm (see Rocker Arm Removal)
  Collars [A]
  Sleeves [B]
  Grease Seals [C]
- Remove the needle bearing [D], using the bearing driver set.

Special Tool - Bearing Driver Set: 57001-1129

- Remove the needle bearings [E], using the oil seal & bearing remover.

Special Tool - Oil Seal & Bearing Remover: 57001-1058

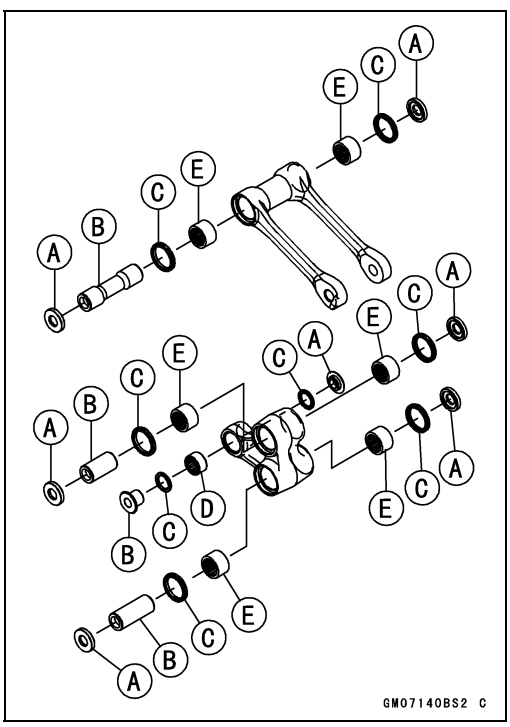

Tie-Rod, Rocker Arm

Tie-Rod and Rocker Arm Bearing Installation

- Replace the needle bearings and grease seals with new ones.
- Install the needle bearings [A] as shown.
  Flush Surface [B]
  4 ±0.4 mm (0.16 ±0.016 in.) [C]

NOTE

○*Install the bearings so that the marked side faces out.*

Special Tool - Bearing Driver Set: 57001-1129

- Install the grease seals.

NOTE

○*Install the grease seals [D] so that the deep groove side [E] faces inward.*
○*Install the grease seals [F] so that the groove side [G] faces outward.*

- Apply plenty of grease to the needle bearings and grease seals.
- Install the sleeves [H] and collars [I].

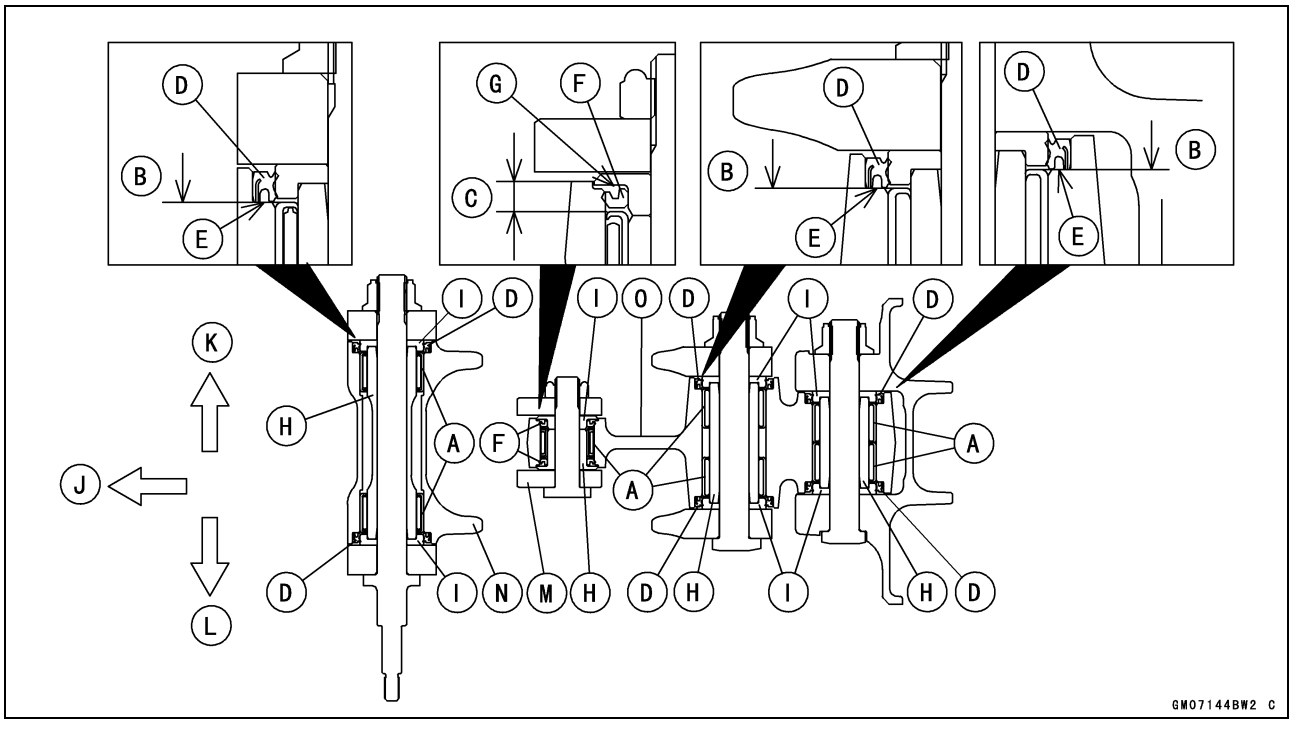

Front Side [J]
Right Side [K]
Left Side [L]
Rear Shock absorber [M]
Tie-Rod [N]
Rocker Arm [O]

Tie-Rod, Rocker Arm

Needle Bearing Inspection

NOTICE
Do not remove the bearings for inspection. Removal may damage them.

- ● Inspect the needle bearings installed in the tie-rod and rocker arm.
- ○The needle bearing normally wear very little, and wear is difficult to measure. Instead of measuring, visually inspect the bearings for abrasion, discoloration, or other damage.
- ★If there is any doubt as to the condition of either needle bearing, replace the bearing and sleeve as a set.

Uni-Trak Maintenance

Uni-Trak Linkage Inspection

- Refer to the Swingarm and Uni-Trak Linkage Inspection in the Periodic Maintenance chapter.

Tie-Rod and Rocker Arm Sleeve Wear Inspection

- Pull out the sleeves [A] of the tie-rod and rocker arm.
- Measure the outside diameter of the sleeve.

Sleeve Outside Diameter

Standard:

Tie-Rod 19.987 ~ 20.000 mm (0.78689 ~ 0.78740 in.)

Rocker Arm:

Large 19.987 ~ 20.000 mm (0.78689 ~ 0.78740 in.)

Small 15.950 ~ 16.000 mm (0.62795 ~ 0.62992 in.)

Service Limit:

Tie-Rod 19.85 mm (0.7815 in.)

Rocker Arm:

Large 19.85 mm (0.7815 in.)

Small 15.92 mm (0.6268 in.)

★If the sleeve is worn past the service limit, replace the sleeve.

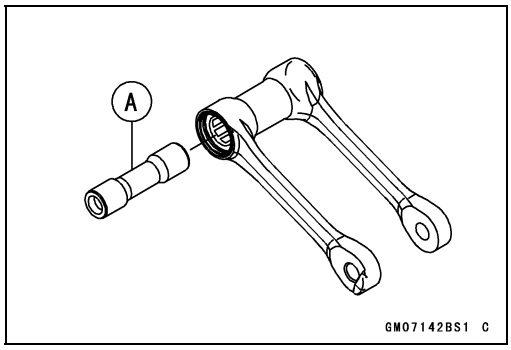

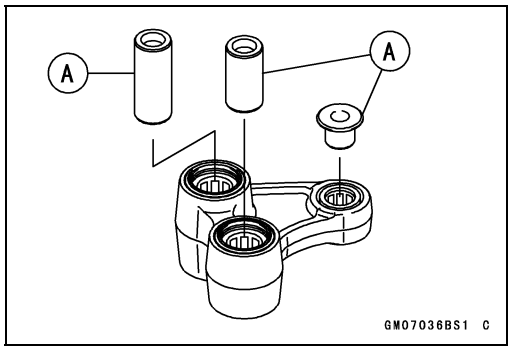

Tie-Rod and Rocker Arm Mounting Bolt Bend Inspection

A bent bolt causes vibration, poor handling, and instability.

- To measure the bolt runout, remove the bolt, place it in V blocks, and set a dial gauge to the bolt at a point halfway between the blocks.
- Turn [A] the bolt to measure the runout.

○The amount of dial variation is the amount of runout.

Tie-Rod and Rocker Arm Mounting Bolt Runout

Standard: TIR 0.1 mm (0.004 in.) or less

Service Limit: TIR 0.2 mm (0.008 in.)

★If runout exceeds the service limit, replace the bolt.

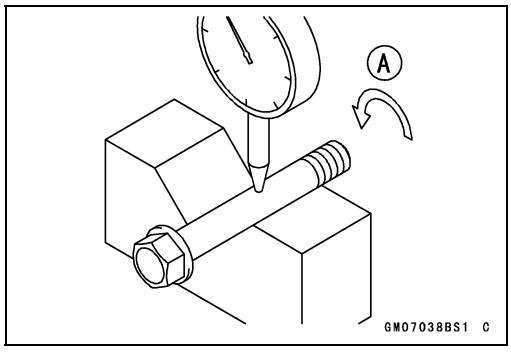

Steering

Table of Contents

Exploded View 14-2
Special Tools 14-4
Steering 14-5
Steering Inspection 14-5
Steering Adjustment 14-5
Steering Stem, Stem Bearing Removal 14-5
Steering Stem, Stem Bearing Installation 14-7
Stem Bearing Lubrication 14-8
Stem Bearing Wear, Damage Inspection 14-8
Stem Warp Inspection 14-9
Handlebar 14-10
Handlebar Removal 14-10
Handlebar Installation 14-11
Handlebar Position Adjustment 14-13

Exploded View

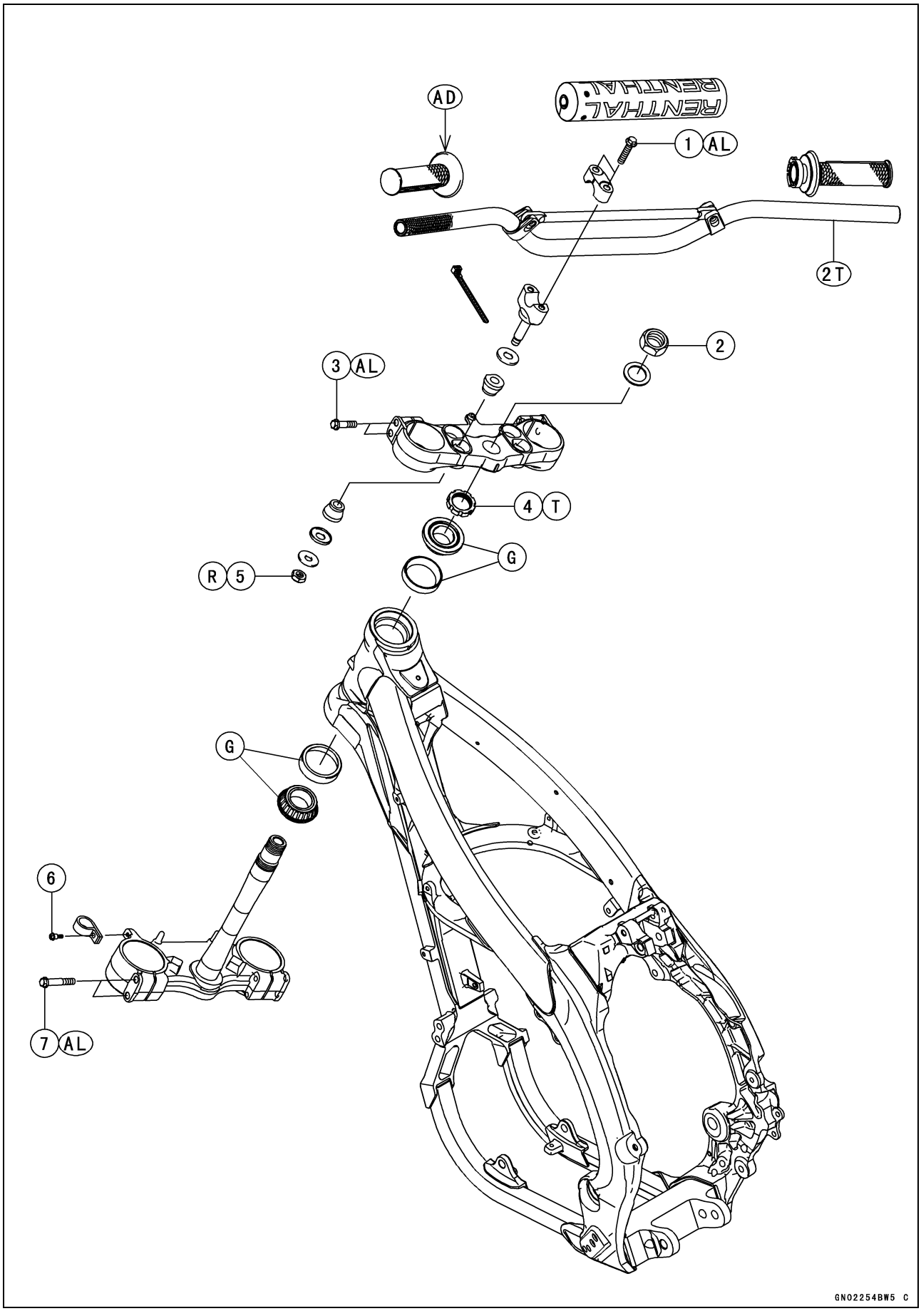

Exploded View

No.	Fastener	Torque			Remarks
		N·m	kgf·m	ft·lb	
1	Handlebar Clamp Bolts	25	2.5	18	AL
2	Steering Stem Head Nut	100	10.2	73.8	
3	Front Fork Clamp Bolts (Upper)	23	2.3	17	AL
4	Steering Stem Nut	5.0	0.51	44 in·lb	T
5	Handlebar Holder Nuts	35	3.6	26	R
6	Front Brake Hose Clamp Bolt (Stem Base)	3.0	0.31	27 in·lb	
7	Front Fork Clamp Bolts (Lower)	23	2.3	17	AL

AD: Apply adhesive.
AL: Tighten the two clamp bolts alternately two times to ensure even tightening torque.
G: Apply grease.
2T: Apply 2-stroke oil.
R: Replacement Parts
T: First, tighten the stem locknut with 55 N·m (5.6 kgf·m, 41 ft·lb) of torque, then loosen it and retighten it with 5.0 N·m (0.51 kgf·m, 49 in·lb) of torque.

Special Tools

Bearing Puller:
57001-135

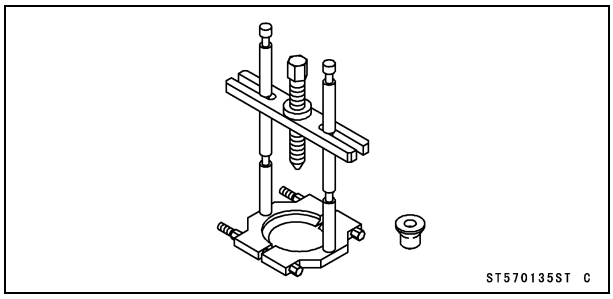

Steering Stem Bearing Driver:
57001-137

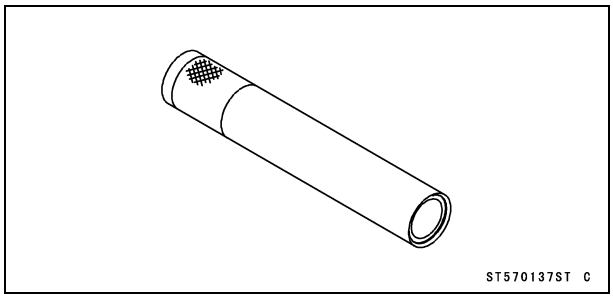

Bearing Puller Adapter:
57001-317

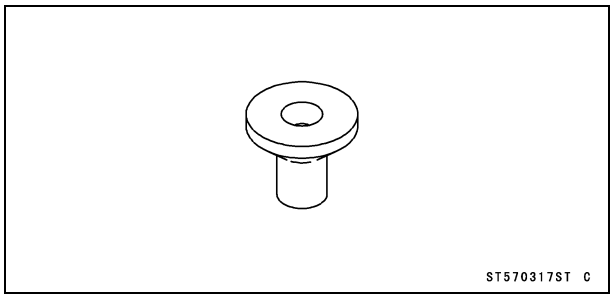

Steering Stem Bearing Driver Adapter, ϕ34.5:
57001-1074

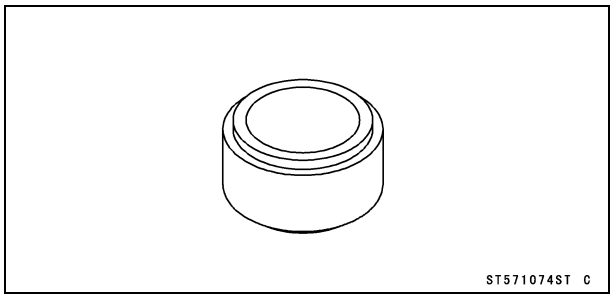

Head Pipe Outer Race Press Shaft:
57001-1075

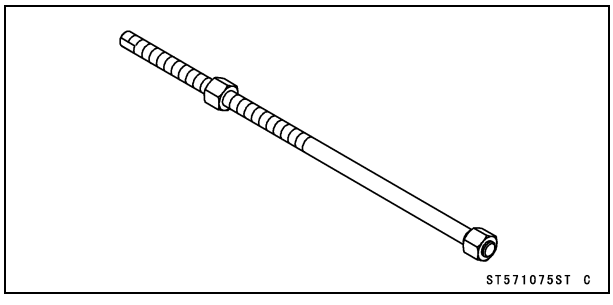

Head Pipe Outer Race Driver, ϕ51.5:
57001-1076

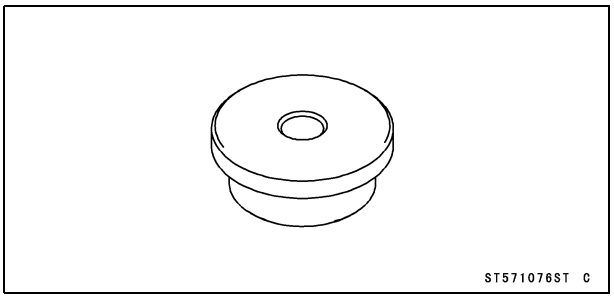

Head Pipe Outer Race Driver, ϕ54.5:
57001-1077

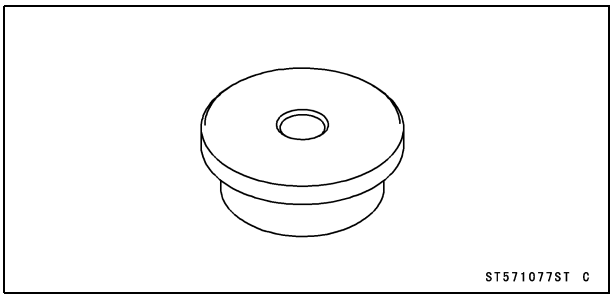

Steering Stem Nut Wrench:
57001-1100

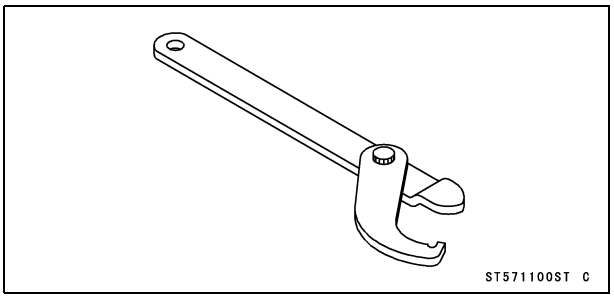

Head Pipe Outer Race Remover ID > 37 mm:
57001-1107

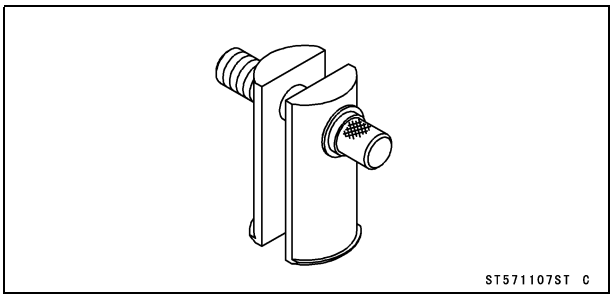

Bearing Puller:
57001-1575

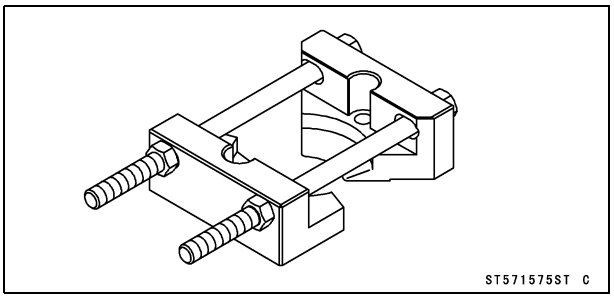

Steering

Steering Inspection

- Refer to the Steering Inspection in the Periodic Maintenance chapter.

Steering Adjustment

- Refer to the Steering Adjustment in the Periodic Maintenance chapter.

Steering Stem, Stem Bearing Removal

- Remove:
  Number Plate (see Number Plate Removal in the Frame chapter)
  Handlebar Pad [A]
  Fuel Tank Breather Hose [B]

- Remove:
  Bolt [A]
  Brake Hose Clamp [B]

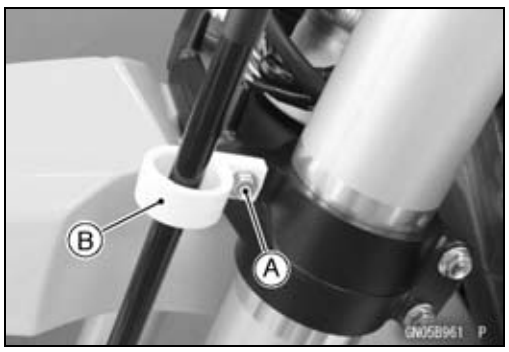

- Remove:
  Handlebar Clamp Bolts [A]
  Handlebar Clamps [B]
  Handlebar [C]
  Steering Stem Head Nut [D] and Washer

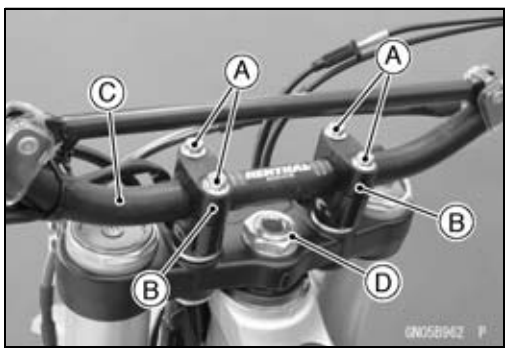

- Remove:
  Front Wheel (see Front Wheel Removal in the Wheels/Tires chapter)
  Front Fender (see Front Fender Removal in the Frame chapter)
  Front Forks (see Front Fork Removal in the Suspension chapter)
  Steering Stem Head [A]

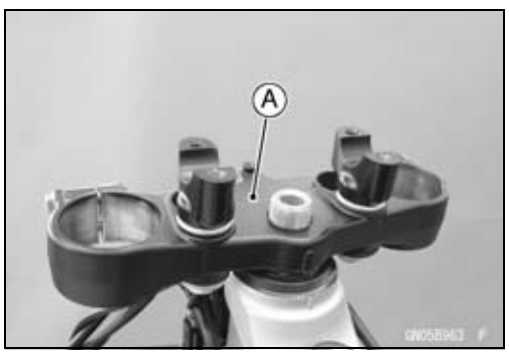

Steering

- Hold the stem base [A] by hand, and remove the steering stem nut [B] with the steering stem nut wrench [C].

  Special Tool - Steering Stem Nut Wrench: 57001-1100

- Remove the steering stem [D] and stem base from the head pipe.

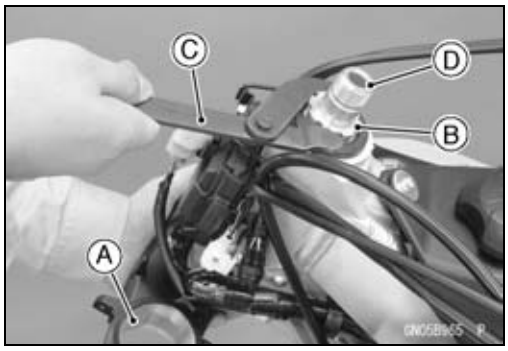

- Remove the upper stem bearing inner race (tapered roller bearing) [A].

- Drive out the bearing outer races from the head pipe.

○Remove the outer races pressed into the head pipe, using the head pipe outer race remover [A], and hammer the head pipe outer race remover to drive it out.

Special Tool - Head Pipe Outer Race Remover ID > 37 mm: 57001-1107

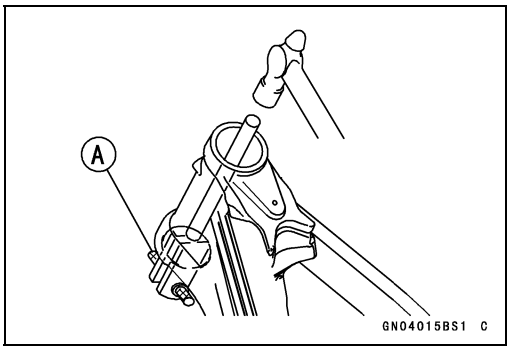

NOTE

○*If either steering stem bearing is damaged, it is recommended that both the upper and lower bearing (including outer races) should be replaced with new ones.*

- Remove the lower bearing inner race (with tapered roller bearing) [A] with its grease seal from the stem using bearing pullers.

  Special Tools - Bearing Puller: 57001-135
  Bearing Puller Adapter: 57001-317
  Bearing Puller: 57001-1575

○Assemble the bearing puller (Special Tool: 57001-1575).

○Insert the each half-split base [B] under the bottom of bearing inner race and connect the both bases by tightening the bolts [C] and nuts [D].

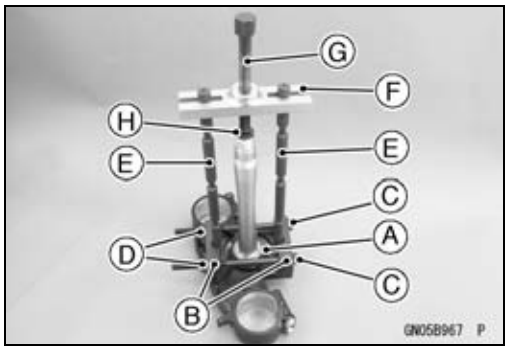

NOTE

○*Tighten evenly two bases by the two stud bolts.*

○Assemble the parts of the bearing puller (Special Tool: 57001-135) as shown in the figure.
  Stud Bolts [E]
  Arm [F]
  Center Bolt [G]
  Adapter [H] (Special Tool: 57001-317)

○Turn the center bolt by a wrench and pull the bearing inner race.

Steering

Steering Stem, Stem Bearing Installation

- Replace the bearing outer race with new ones.
- Apply grease to the outer races.
- Drive the outer races into the head pipe at the same time with the special tools.

Special Tools - Head Pipe Outer Race Press Shaft [A]: 57001-1075
Head Pipe Outer Race Driver, ϕ51.5 [B]: 57001-1076
Head Pipe Outer Race Driver, ϕ54.5 [C]: 57001-1077

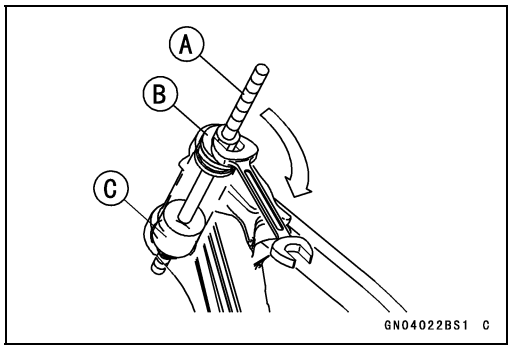

- Replace the inner races with new ones.
- Apply grease to the lower tapered roller bearing [A], and drive it onto the stem with the steering stem bearing driver [B] and adapter [C].

Special Tools - Steering Stem Bearing Driver: 57001-137
Steering Stem Bearing Driver Adapter, ϕ34.5: 57001-1074

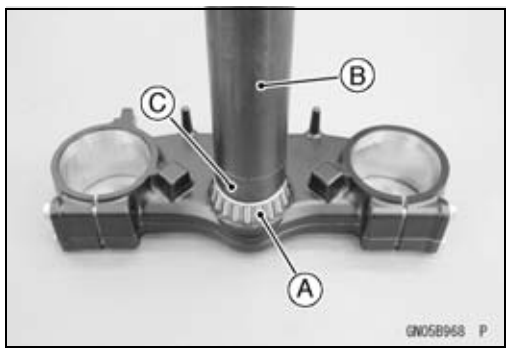

- Apply grease to the upper tapered roller bearing, and install it in the head pipe.
- Install the stem through the head pipe and upper bearing, and hand-tighten the stem nut while pushing up the stem base.
- Install the stem head and washer, and tighten the stem head nut lightly.
- Settle the bearing in place as follows;

○Tighten the stem nut to **55 N·m (5.6 kgf·m, 41 ft·lb)** of torque (To tighten the steering stem nut to the specified torque, hook the wrench [A] on the stem nut, and pull the wrench at the hole by **31.1 kgf** force [B] in the direction shown.).

Special Tool - Steering Stem Nut Wrench: 57001-1100

○Check that there is no play and the steering stem turns smoothly without rattles. If not, the steering stem bearings may be damaged.

○Again back out the stem nut a fraction of a turn until it turns lightly.

○Turn the stem nut lightly clockwise until it just becomes hard to turn. Do not overtighten, or the steering will be too tight.

Torque - Steering Stem Nut: 5.0 N·m (0.51 kgf·m, 44 in·lb)

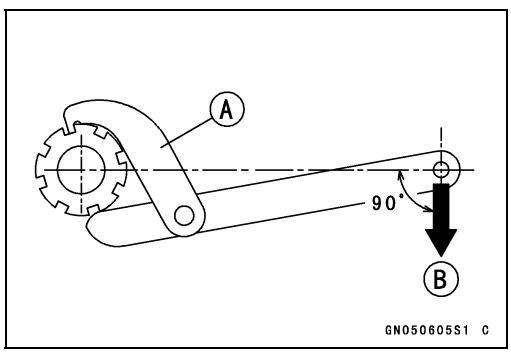

Steering

- Install the stem head.
- Install the washer, and tighten the stem head nut temporarily.
- Install the front forks (see Front Fork Installation in the Suspension chapter).

NOTE

○*Tighten the fork clamp bolts (upper) first, next the stem head nut, last the fork clamp bolt (lower).*

- Tighten:

Torque - Front Fork Clamp Bolts (Upper): 23 N·m (2.3 kgf·m, 17 ft·lb)
Steering Stem Head Nut: 100 N·m (10.2 kgf·m, 73.8 ft·lb)
Front Fork Clamp Bolts (Lower): 23 N·m (2.3 kgf·m, 17 ft·lb)

NOTE

○*Tighten the two clamp bolts alternately two times to ensure even tightening torque.*

- Install the removed parts (see appropriate chapters).

⚠ WARNING

If the handlebar does not turn to the steering stop it may cause an accident resulting in injury or death. Be sure the cables, harnesses and hoses are routed properly and do not interfere with handlebar movement (see Cable, Wire, and Hose Routing section in the Appendix chapter).

- Check and Adjust:
  Steering
  Front Brake
  Clutch Cable
  Throttle Cable

Stem Bearing Lubrication

- Refer to the Steering Stem Bearing Lubrication in the Periodic Maintenance chapter.

Stem Bearing Wear, Damage Inspection

- Using a high flash-point solvent, wash the upper and lower tapered rollers in the cages, and wipe the upper and lower outer races, which are press-fitted into the head pipe, clean off grease and dirt.
- Visually check the outer race and the rollers.

★Replace the bearing assembly if it show damage.

Steering

Stem Warp Inspection

- Whenever the steering stem is removed, or if the steering cannot be adjusted for smooth action, check the steering stem shaft [A] for straightness.

★If the steering stem shaft is bent, replace the steering stem.

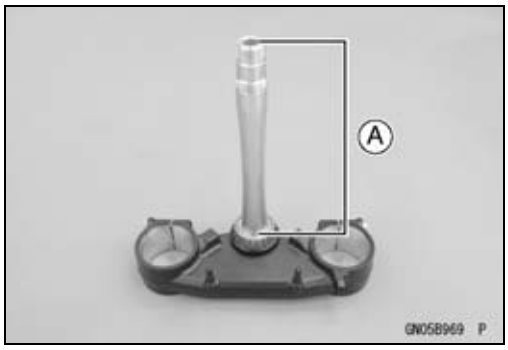

Handlebar

Handlebar Removal

- Remove:
  Number Plate (see Number Plate Removal in the Frame chapter)
  Handlebar Pad [A]

- Remove:
  Clutch Lever Holder Assembly [A]
  Engine Stop Switch [B]
  Launch Control Mode Button [C]
  Band [D]
  Left Handlebar Grip [E]

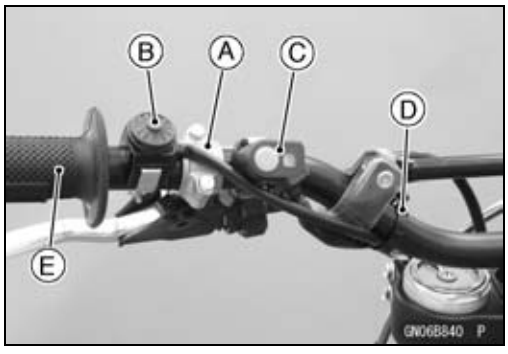

- Remove:
  Throttle Grip Assy [A] (see Throttle Cable Replacement in the Fuel System (DFI) chapter)
  Front Master Cylinder [B] (see Front Master Cylinder Removal in the Brakes chapter)

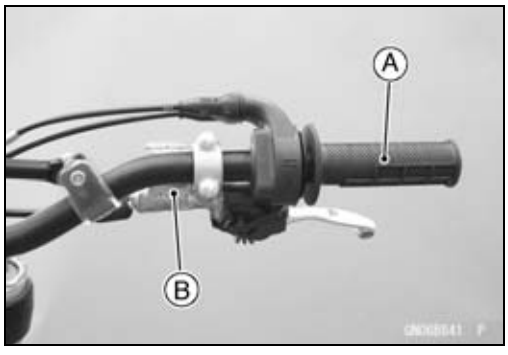

- Remove:
  Handlebar Clamp Bolts [A]
  Handlebar Clamps [B]
  Handlebar [C]
- Check the handlebar for bends or cracks.

★If the handlebar was bended or cracked, replace it.

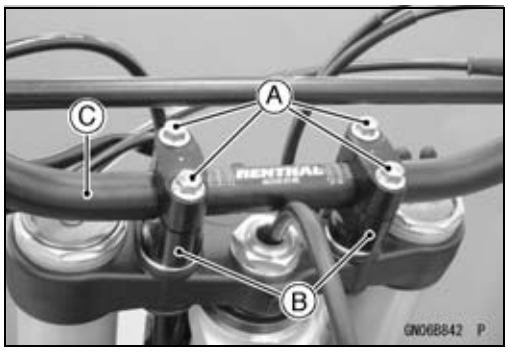

Handlebar

Handlebar Installation

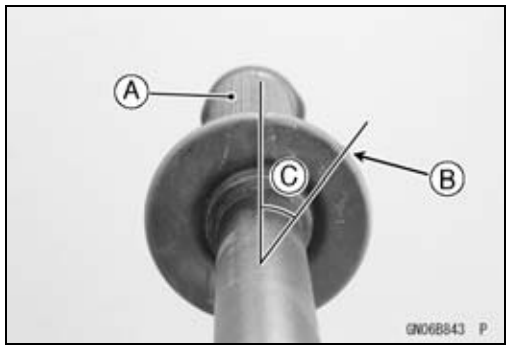

- Apply adhesive cement to the innermost area of the left handlebar grip and all-around inner surface of the left handlebar grip hole entrance and also apply it to the roulette area on the handlebars.
- Install the left handlebar grip [A] as shown.
  Projection [B]
  45° [C]

○When installing the left handlebar grip, rotate the grip more than once first, and then remove and install the grip alternately more than three times to spread adhesive cement. Make sure that adhesive cement has been spread evenly.

○After installation, hold the left handlebar grip area at more than three points to make the left handlebar grip stick to the handlebars.

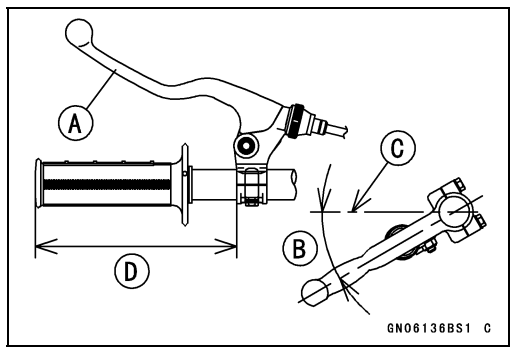

- Install the clutch lever holder assembly [A] as shown.
  25 ~ 35° [B]
  Horizontal Line of Frame [C]
  148 mm (5.83 in.) [D]
- Tighten the upper clamp bolt first, and then the lower clamp bolt. There will be a gap at the lower part of the clamp after tightening.

Torque - Clutch Lever Clamp Bolts: 4.0 N·m (0.41 kgf·m, 35 in·lb)

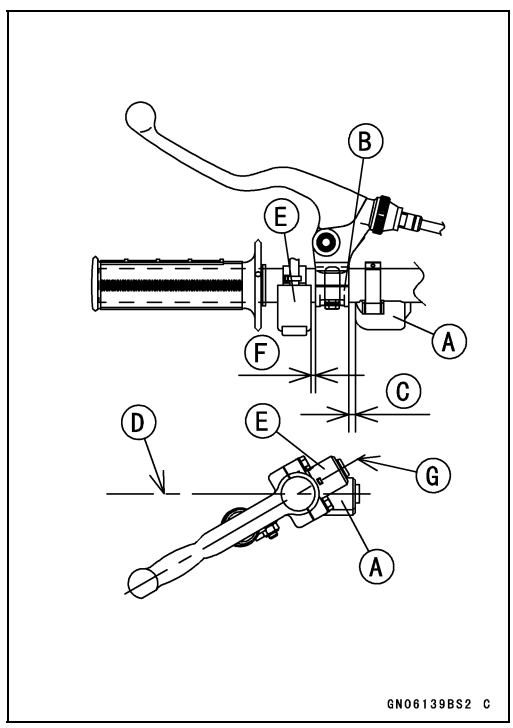

- Install the launch control mode button [A] as shown.
  Clutch Lever Holder Assembly [B]
  5 ~ 10 mm (0.2 ~ 0.4 in.) [C]

○Position the launch control mode button so that its upper surface is paralleled with the horizontal line of frame [D].

Torque - Launch Control Mode Button Clamp Screw: 1.2 N·m (0.12 kgf·m, 11 in·lb)

- Install the engine stop switch [E].
  3 ~ 8 mm (0.12 ~ 0.31 in.) [F]

○Align the engine stop switch with the clutch lever line [G].

Torque - Engine Stop Switch Clamp Screw: 1.2 N·m (0.12 kgf·m, 11 in·lb)

- Run the launch control mode button lead and engine stop switch lead correctly (see Cable, Wire, and Hose Routing section in the Appendix chapter).

Handlebar

- Apply grease to the throttle cable upper end and clutch cable upper end.
- Apply 2-stroke oil to the edge (slash area) of the handlebar.
  120 mm (4.72 in.) [A]

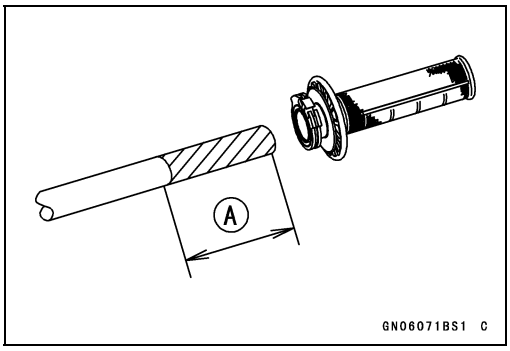

- Install the throttle grip assembly so that the grip [A] is in as far as it will go.

○Position the throttle grip assembly so that the cable gateway [B] of the throttle case is above the handlebar.

Torque - Throttle Cable Housing Screws: 3.8 N·m (0.39 kgf·m, 34 in·lb)

- Install the front master cylinder (see Front Master Cylinder Installation in the Brakes chapter).

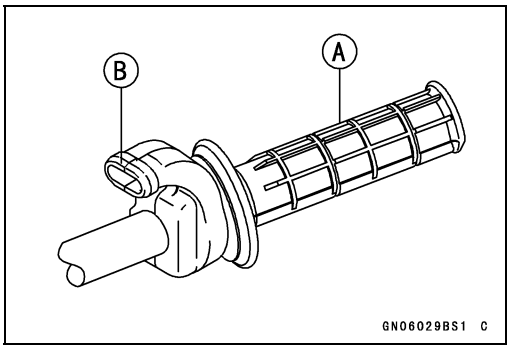

- Install the handlebar [A] on the steering stem head as follows.

○The handlebar angle position can be adjusted to suit your preference using the gauge marks [B].

○Position the handlebar so that the gauge marks is equal positions [C].
  Bridge Bar [D]

- Install the handlebar clamps [E] and handlebar clamp bolts [F].

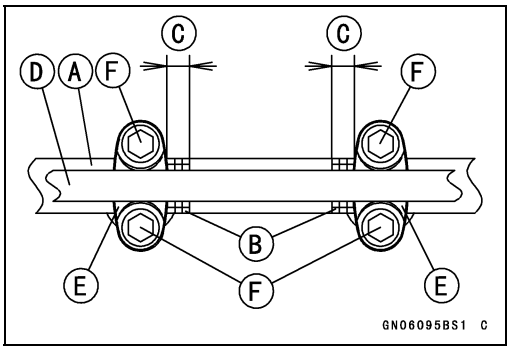

- Tighten the handlebar clamp bolts [A].

○Equalize the front and rear gaps [B].

NOTE

○*Tighten the two clamp bolts alternately two times to ensure even tightening torque.*

Torque - Handlebar Clamp Bolts: 25 N·m (2.5 kgf·m, 18 ft·lb)

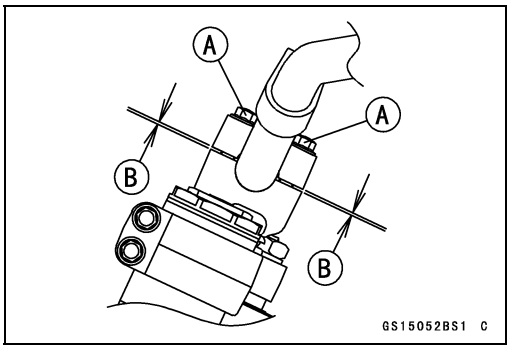

- Install:
  Handlebar Pad [A]
  Number Plate (see Number Plate Installation in the Frame chapter)

Handlebar

Handlebar Position Adjustment

The handlebar position can be adjusted in four positions back and forth.

Front Holes [A]
Rear Holes [B]
Handlebar Holders [C]

To suit various riding positions, the handlebar holder position can be changed and the handlebar can be adjusted by turning the handlebar holders around (180°).

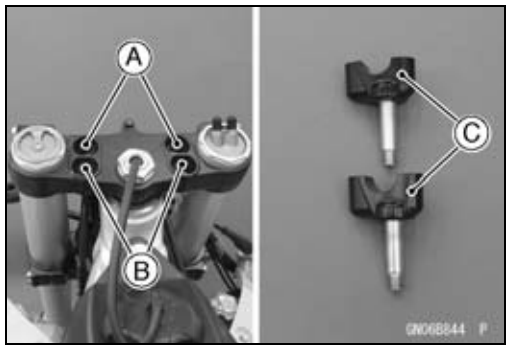

- Remove the handlebar pad.
- Remove the handlebar clamp bolts [A], handlebar clamps [B] and handlebar [C].
- Check the handlebar for damage or cracks.

★If the handlebar is damage or cracks, replace it with a new one.

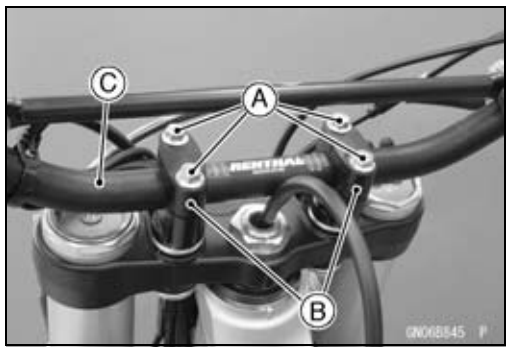

- Remove:
  Handlebar Holder Nuts [A]
  Flat Washers [B]
  Round Washers [C]
  Handlebar Holders [D]
  Dampers [E]

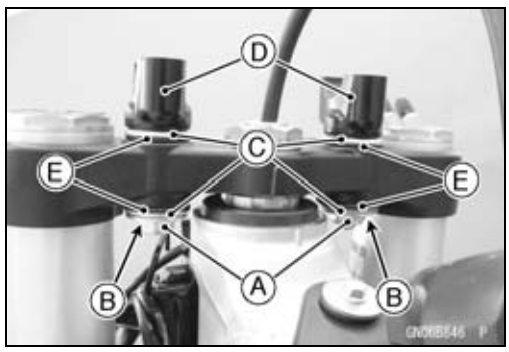

- Select the handlebar position and install the upper and lower dampers [A] into the hole [B] of the steering stem head [C] so that the flat surface [D] of dampers fit the flat surface [E] of the steering stem head hole.

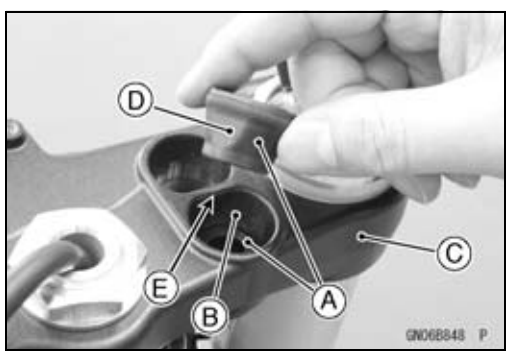

- Install the round washer [A] and handlebar holder [B] in the suitable direction.

○Install the round washer so that the round part fits on the damper.

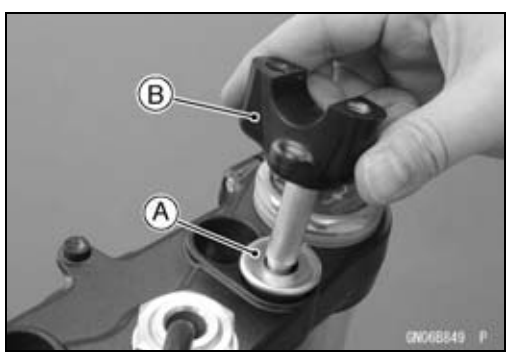

Handlebar

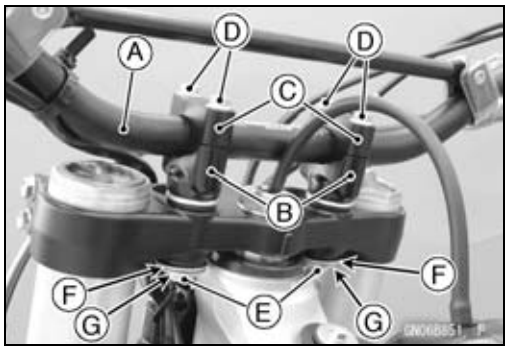

- Put the handlebar [A] on the handlebar holders [B].
- Temporarily install the handlebar clamps [C] and tighten the handlebar clamp bolts [D].
- Replace the handlebar holder nuts [E] with new ones.
- Install the round washers [F], flat washers [G], and handlebar holder nuts.

○Install the round washers so that the round part fits under the dampers.

- Tighten:

  Torque - Handlebar Holder Nuts: 35 N·m (3.6 kgf·m, 26 ft·lb)

- Install the handlebar (see Handlebar Installation).

Frame

Table of Contents

Exploded View 15-2
Frame 15-4
- Frame Inspection 15-4
- Rear Frame Removal 15-4
- Rear Frame Installation 15-4
- Engine Guards Removal 15-5
- Engine Guards Installation 15-5

Seat 15-6
- Seat Removal 15-6
- Seat Installation 15-6

Side Covers 15-7
- Side Cover Removal 15-7
- Side Cover Installation 15-7

Radiator Shroud 15-8
- Radiator Shroud Removal 15-8
- Radiator Shroud Installation 15-8

Number Plate 15-9
- Number Plate Removal 15-9
- Number Plate Installation 15-9

Fender 15-10
- Front Fender Removal 15-10
- Front Fender Installation 15-10
- Rear Fender Removal 15-10
- Rear Fender Installation 15-10
- Rear Flap Removal 15-10
- Rear Flap Installation 15-10

Footpegs 15-11
- Footpeg Removal 15-11
- Footpeg Installation 15-11
- Footpeg Height Adjustment 15-12

Exploded View

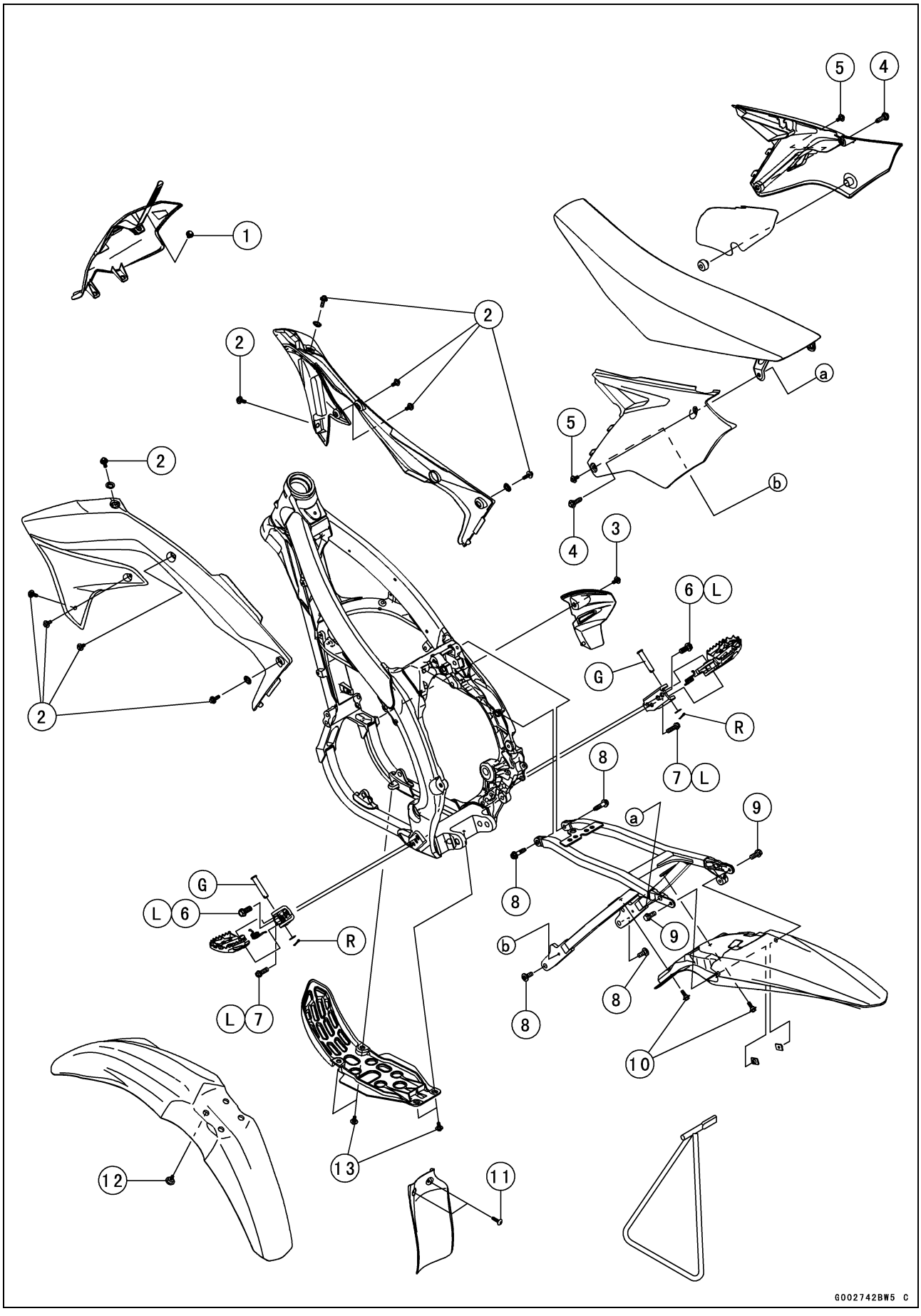

Exploded View

No.	Fastener	Torque			Remarks
		N·m	kgf·m	ft·lb	
1	Number Plate Bolt	8.0	0.82	71 in·lb	
2	Radiator Shroud Bolts	7.0	0.71	62 in·lb	
3	Right Engine Guard Bolt	8.0	0.82	71 in·lb	
4	Seat Bolts	25	2.5	18	
5	Side Cover Bolts	7.0	0.71	62 in·lb	
6	Footpeg Bracket Bolts (Upper)	35	3.6	26	L
7	Footpeg Bracket Bolts (Lower)	17	1.7	13	L
8	Rear Frame Mounting Bolts	35	3.6	26	
9	Rear Fender Bolts (Rear)	8.0	0.82	71 in·lb	
10	Rear Fender Bolts (Front)	7.0	0.71	62 in·lb	
11	Rear Flap Screws	1.2	0.12	11 in·lb	
12	Front Fender Bolts	8.0	0.82	71 in·lb	
13	Lower Engine Guard Bolts	7.0	0.71	62 in·lb	

G: Apply grease.
L: Apply a non-permanent locking agent.
R: Replacement Parts
WL: Apply soap and water solution or lubber lubricant.

Frame

Frame Inspection

- Refer to the Frame Inspection in the Periodic Maintenance chapter.

Rear Frame Removal

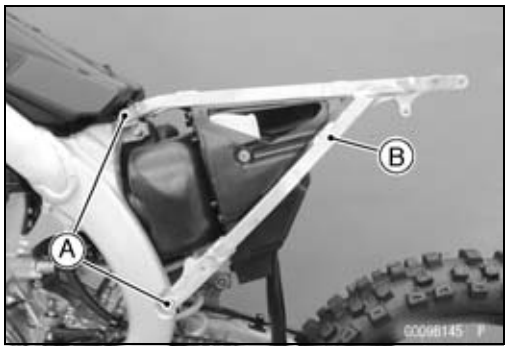

- Remove:
  Seat (see Seat Removal)
  Side Covers (see Side Cover Removal)
  Radiator Shroud (see Radiator Shroud Removal)
  Muffler Body (see Muffler Body Removal in the Engine Top End chapter)
  Rear Fender (see Rear Fender Removal)
- Remove the rear frame mounting bolts [A] on both sides.
- Take off the rear frame [B].

Rear Frame Installation

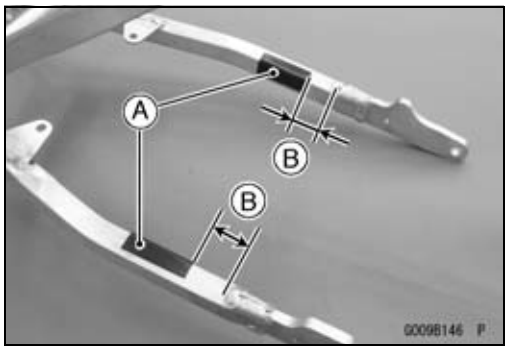

- Check that the pads [A] is in place on the rear frame.
  20 ~ 30 mm (0.79 ~ 1.18 in.) [B]

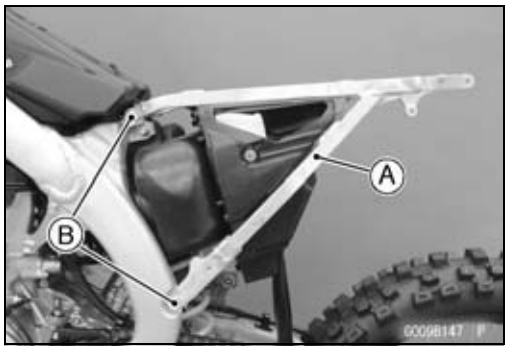

- Install the rear frame [A].
- Tighten:

  Torque - Rear Frame Mounting Bolts [B]: 35 N·m (3.6 kgf·m, 26 ft·lb)

- Install the removed parts (see appropriate chapters).

Frame

Engine Guards Removal

- Remove the engine guards as shown.
  Right Engine Guard [A]
  Lower Engine Guard [B]
  Right Engine Guard Bolt [C]
  Lower Engine Guard Bolts[D]

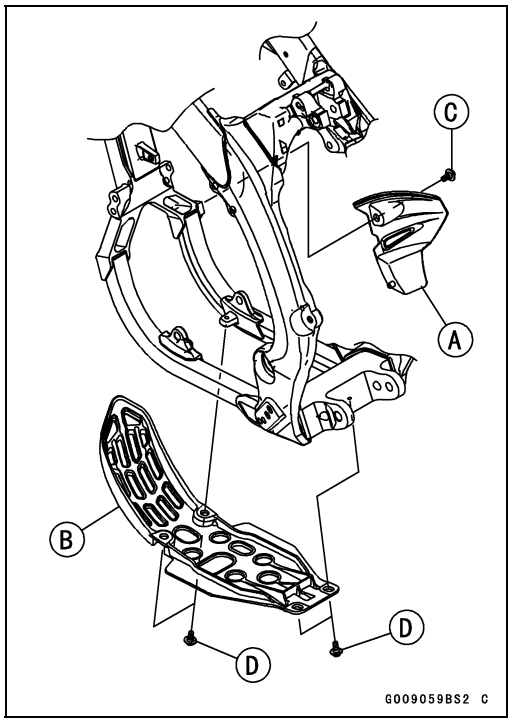

Engine Guards Installation

- Installation is the reverse of removal.
- Fit the projection [A] of the right engine guard to the hole [B] of the frame.
- Tighten:

Torque - Right Engine Guard Bolt: 8.0 N·m (0.82 kgf·m, 71 in·lb)
Lower Engine Guard Bolts: 7.0 N·m (0.71 kgf·m, 62 in·lb)

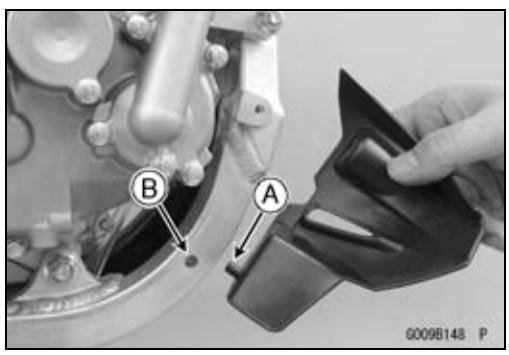

Seat

Seat Removal

- Remove the seat bolt [A] on both sides.

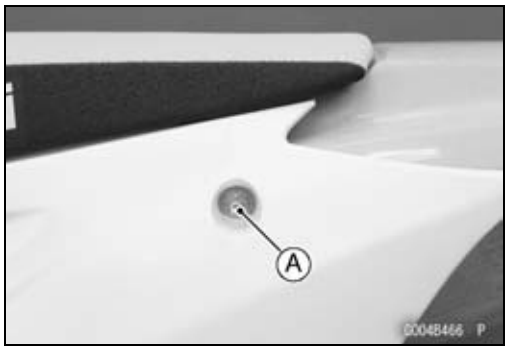

- Open the both side covers [A] slightly outward and slide the seat [B] rearward.

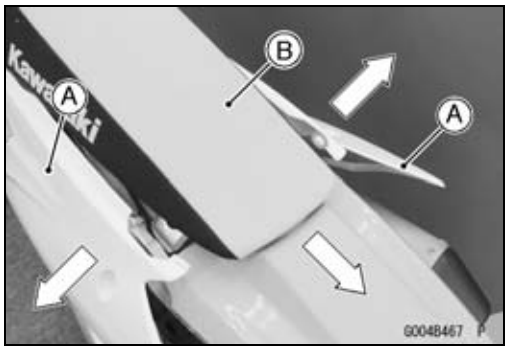

Seat Installation

- Install the seat.
  - ○Insert the hooks [A] of the seat under the flange collar [B] and frame [C].
  - ○Take care not to damage the side covers with the bracket of seat.
- Tighten:

  Torque - Seat Bolts: 25 N·m (2.5 kgf·m, 18 ft·lb)

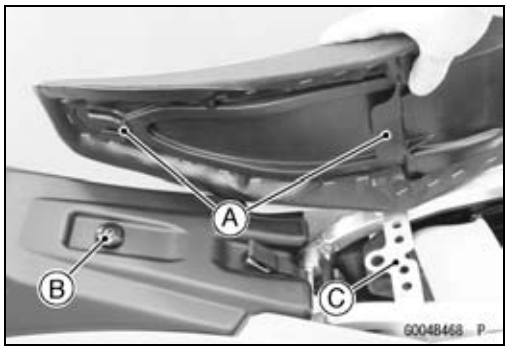

Side Covers

Side Cover Removal

- Remove:
  Side Cover Bolt [A]
  Radiator Shroud Bolt [B]
  Seat Bolt [C]

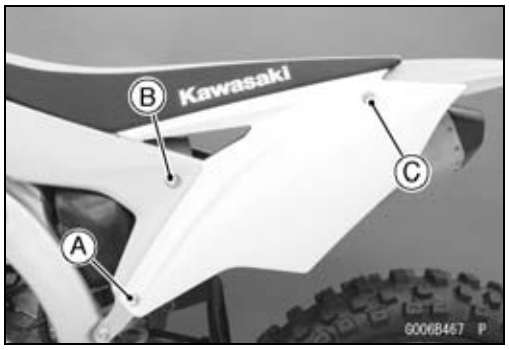

- Pull the side cover [A] upward to clear the hooks [B] and remove the side cover.

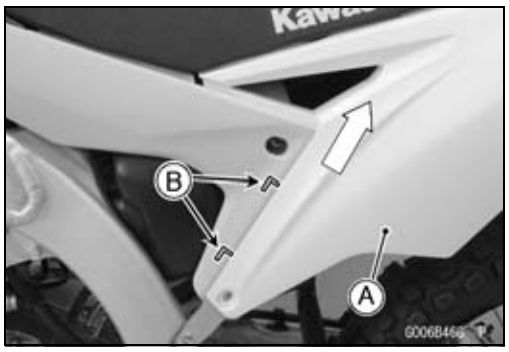

Side Cover Installation

- Stick the pad [A] on the inside of the right side cover.
- Install the damper [B] securely.

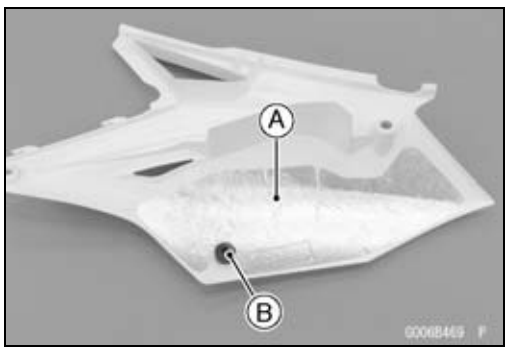

- Insert the hooks [A] of the side cover [B] to the ribs [C] of the radiator shroud [D].

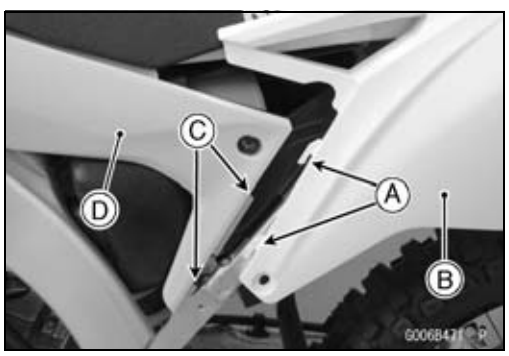

- Tighten:

  Torque - Side Cover Bolt [A]: 7.0 N·m (0.71 kgf·m, 62 in·lb)
  Radiator Shroud Bolt [B]: 7.0 N·m (0.71 kgf·m, 62 in·lb)
  Seat Bolt [C]: 25 N·m (2.5 kgf·m, 18 ft·lb)

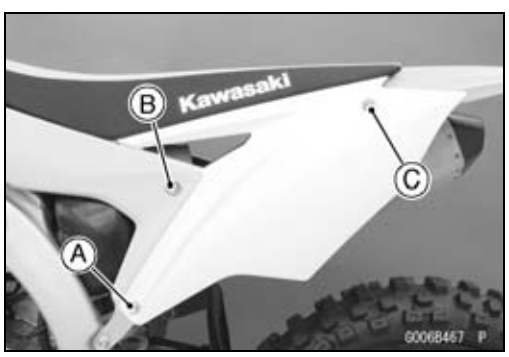

Radiator Shroud

Radiator Shroud Removal

- Remove:
  Side Cover (see Side Cover Removal)
  Bolts [A]
  Radiator Shroud [B]

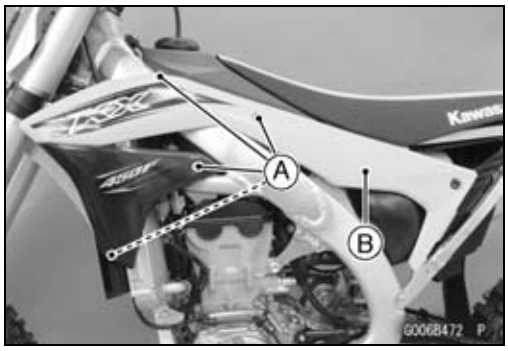

Radiator Shroud Installation

- Check the collars [A] are in place on the radiator shroud [B].

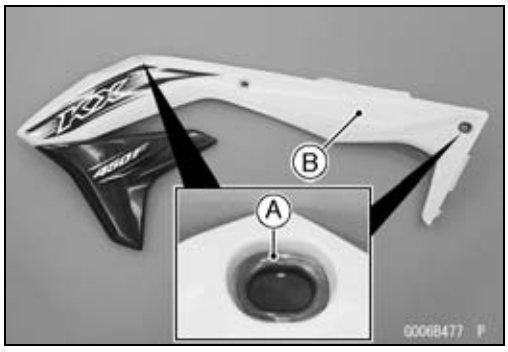

- Install the radiator shroud [A].
- Tighten the radiator shroud bolts.
  L = 9 mm (0.35 in.) [B]
  L = 14 mm (0.55 in.) [C]
  L = 20 mm (0.79 in.) [D]

  Torque - Radiator Shroud Bolts: 7.0 N·m (0.71 kgf·m, 62 in·lb)
- Install the side cover (see Side Cover Removal).

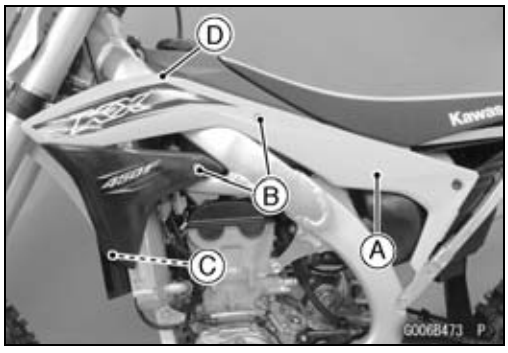

Number Plate

Number Plate Removal

- Unlock the band [A] of the number plate [B].
- Remove the bolt [C].
- Clear the projections [D] and remove the number plate.

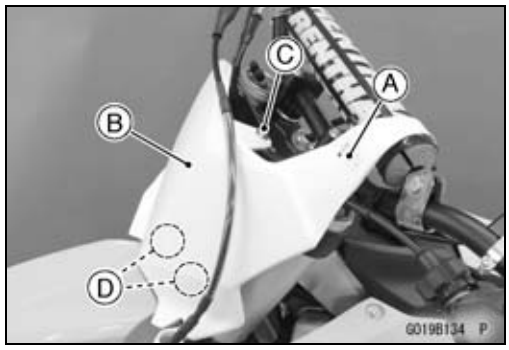

Number Plate Installation

- Fit the holes [A] of the number plate and projections [B] of the steering stem base.

○Run the brake hose through the front of the number plate.

- Install the band to the handlebar pad, and tighten the bolt.

Torque - Number Plate Bolt: 8.0 N·m (0.82 kgf·m, 71 in·lb)

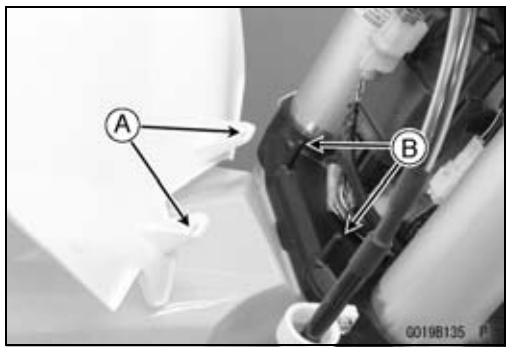

Fender

Front Fender Removal

- Remove the bolts [A] and take off the front fender.

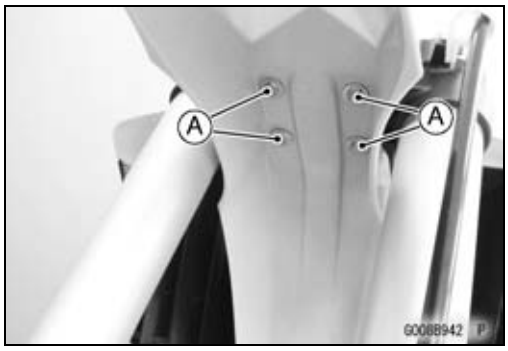

Front Fender Installation

- Tighten:

Torque - Front Fender Bolts: 8.0 N·m (0.82 kgf·m, 71 in·lb)

Rear Fender Removal

- Remove the side covers (see Side Cover Removal).
- Remove the rear fender bolts (front) [A].
- Remove the rear fender bolts (rear) [B] on both sides, and take off the rear fender [C].

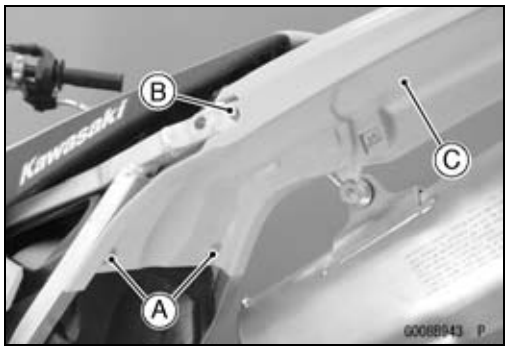

Rear Fender Installation

- Check that the claw [A] of collars faces inside of frame.

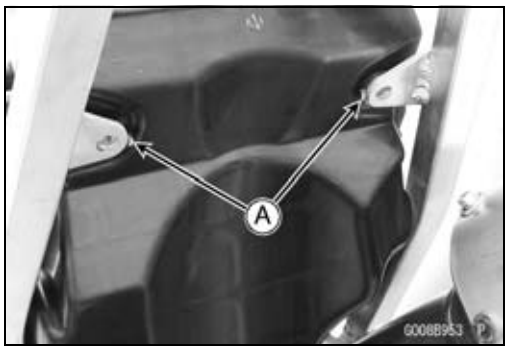

- Tighten:

Torque - Rear Fender Bolts (Front): 7.0 N·m (0.71 kgf·m, 62 in·lb)
Rear Fender Bolts (Rear): 8.0 N·m (0.82 kgf·m, 71 in·lb)

- Install the side covers (see Side Cover Installation).

Rear Flap Removal

- Remove the screws [A] and rear flap [B].

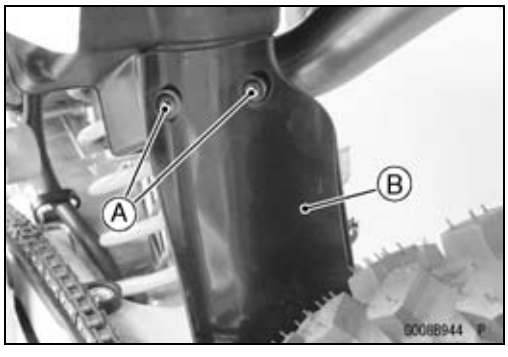

Rear Flap Installation

- Tighten:

Torque - Rear Flap Screws: 1.2 N·m (0.12 kgf·m, 11 in·lb)

Footpegs

Footpeg Removal

- For the right footpeg removal, remove the brake pedal assy (see Right Engine Cover Removal in the Clutch chapter).
- Remove:
  Cotter Pin [A]
  Washer [B]
  Pivot Pin [C]
  Spring [D]
  Footpeg [E]
  Footpeg Bracket Bolt [F]
  Footpeg Bracket Bolt [G]

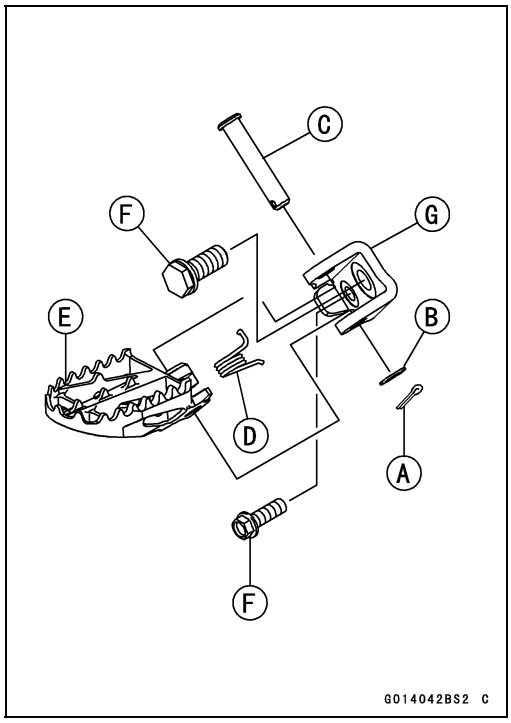

Footpeg Installation

NOTE

○*The footpeg can be adjusted in two positions, refer to the Footpeg Height Adjustment.*

- Replace the cotter pin [A] with a new one.
- Apply a non-permanent locking agent to the footpeg bracket bolts [B].
- Install the footpeg bracket [C], and tighten the bolts.

Torque - Footpeg Bracket Bolt (Upper): 35 N·m (3.6 kgf·m, 26 ft·lb)
Footpeg Bracket Bolt (Lower): 17 N·m (1.7 kgf·m, 13 ft·lb)

- Apply grease to the pivot pin [D].
- Install the footpeg [E], spring [F] and pivot pin.

○Insert the pivot pin from upper side.

- Install the washer [G] and cotter pin.

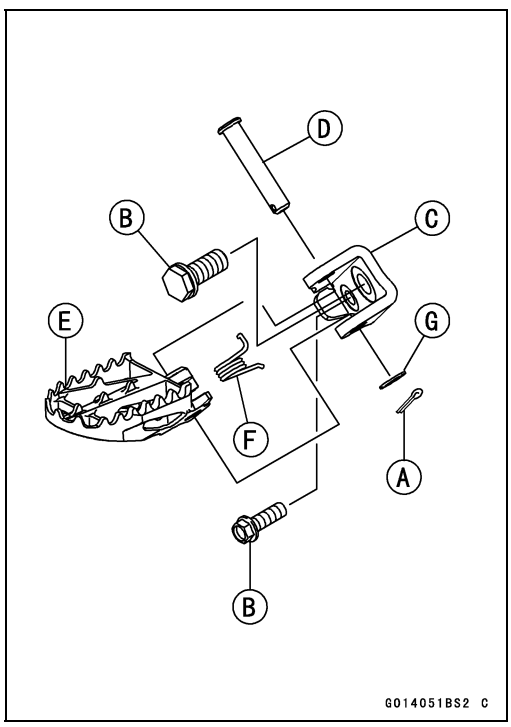

- Bend the longer side [A] of the cotter pin as shown.

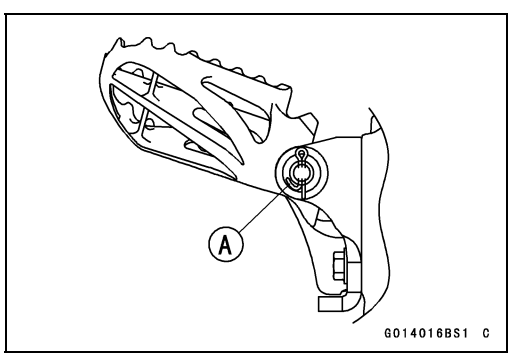

Footpegs

Footpeg Height Adjustment

○The footpeg can be adjusted in two positions.
Footpeg Bracket [A]
Bolts [B]
Bolt Holes [C]
Upper Position [D]
Lower Position [E]

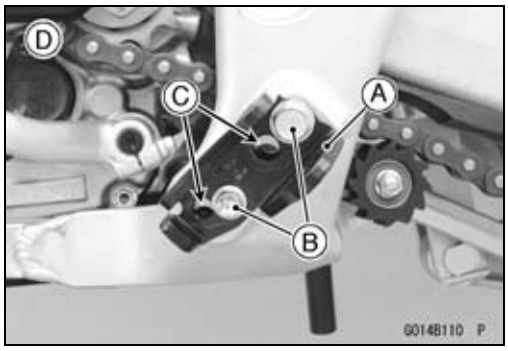

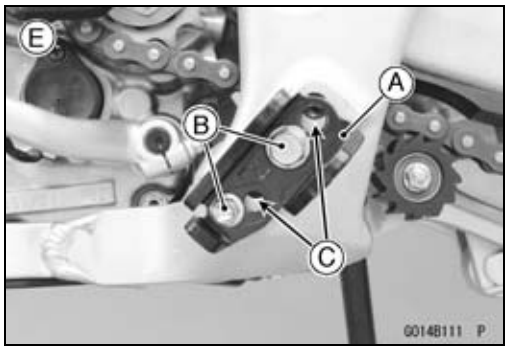

- Remove:
  Footpegs (see Footpeg Removal)
- Adjust the footpeg height.

NOTE

○*Install the footpegs with same height on both sides. Do not ride the motorcycle with footpegs installed unevenly.*
○*Adjust the position of the shift pedal and the brake pedal to suit the rider's preference.*
○*Installing the footpegs in the lower position will reduce the amount of ground clearance and lean angle.*

- Install:
  Footpegs (see Footpeg Installation)

Electrical System

Table of Contents

Exploded View 16-2
Specifications 16-4
Special Tools and Sealant 16-5
Wiring Diagram 16-6
Precautions 16-8
Electrical Wiring 16-9
  Wiring Inspection 16-9
Flywheel Magneto 16-10
  Magneto Cover Removal 16-10
  Magneto Cover Installation 16-10
  Flywheel Removal 16-10
  Flywheel Installation 16-11
  Stator Coil Removal 16-12
  Stator Coil Installation 16-12
  Flywheel Magneto Inspection 16-13
Charging System 16-15
  Regulator/Rectifier Removal 16-15
  Regulator/Rectifier Installation 16-15
  Regulator/Rectifier Output Voltage Inspection 16-15
  Regulator/Rectifier Inspection 16-16
  Capacitor Removal 16-18
  Capacitor Installation 16-18
Ignition Timing 16-19
  Ignition Timing Inspection 16-19
Ignition System 16-20
  Safety Instructions 16-20
  Ignition Coil Removal 16-20
  Ignition Coil Installation 16-20
  Ignition Coil Inspection 16-21
  Spark Plug Cleaning and Inspection 16-22
  Spark Plug Gap Inspection 16-22
  Ignition Coil Primary Peak Voltage Check 16-23
  IC Igniter Inspection 16-23
  Crankshaft Sensor Peak Voltage Check 16-25
  Crankshaft Sensor Inspection 16-25
  Engine Stop Switch System Check 16-26
  Launch Control Mode Button System Check 16-26
  DFI Setting Data Selection Connector Inspection 16-26
Switches 16-28
  Engine Stop Switch Inspection 16-28
  Launch Control Mode Button Inspection 16-28
  Gear Position Switch Removal 16-28
  Gear Position Switch Installation 16-28
  Gear Position Switch Inspection 16-28

Exploded View

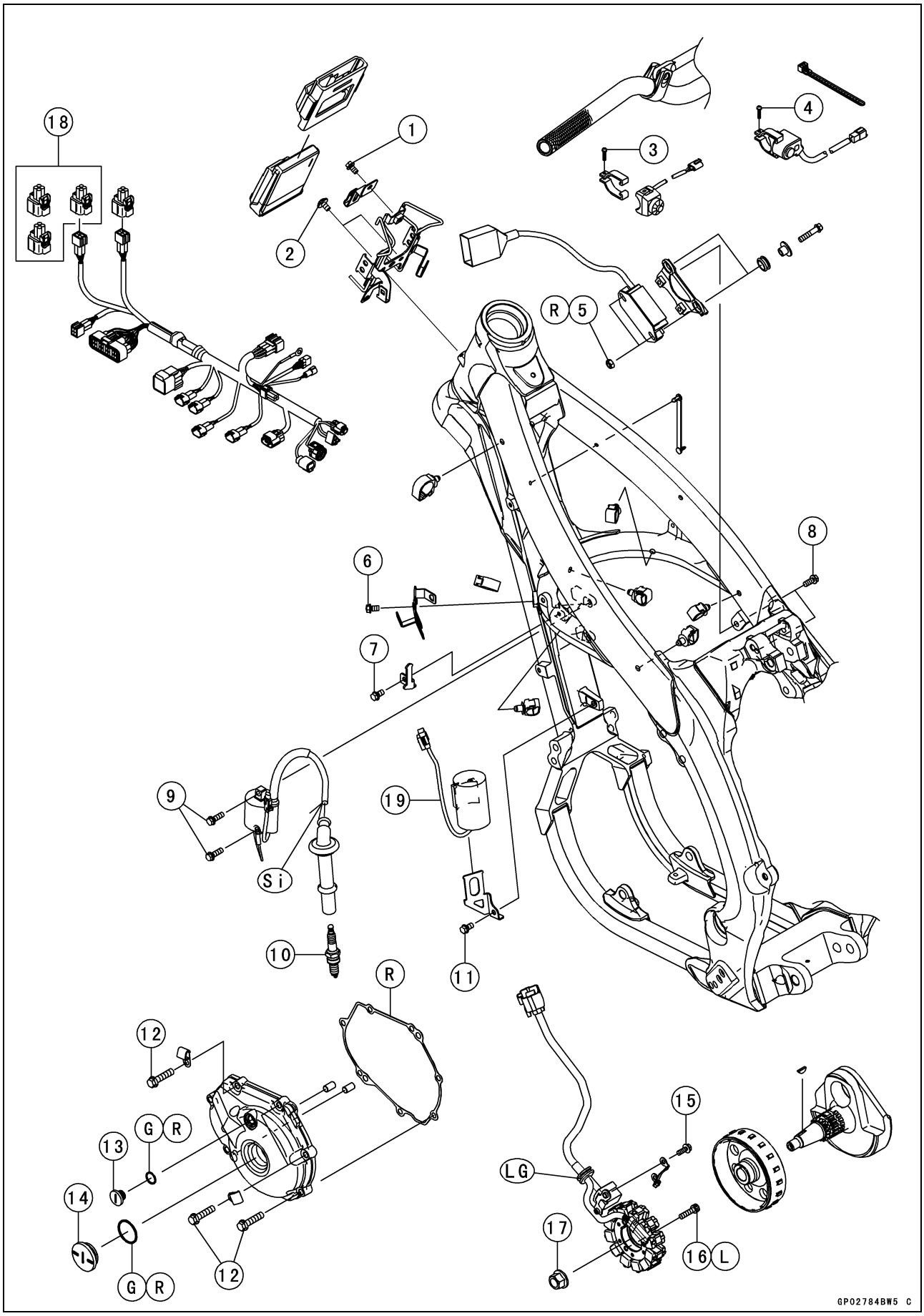

Exploded View

No.	Fastener	Torque			Remarks
		N·m	kgf·m	ft·lb	
1	Diagnostic Connector Bracket Bolt	5.0	0.51	44 in·lb	
2	ECU Bracket Bolts	8.0	0.82	71 in·lb	
3	Engine Stop Switch Clamp Screw	1.2	0.12	11 in·lb	
4	Launch Control Mode Button Clamp Screw	1.2	0.12	11 in·lb	
5	Regulator/Rectifier Nuts	8.0	0.82	71 in·lb	R
6	Connector Bracket Bolt	8.0	0.82	71 in·lb	
7	Vehicle-down Sensor Bracket Bolt	7.0	0.71	62 in·lb	
8	Regulator/Rectifier Bracket Bolts	8.0	0.82	71 in·lb	
9	Ignition Coil Bolts	8.0	0.82	71 in·lb	
10	Spark Plug	13	1.3	115 in·lb	
11	Capacitor Bracket Bolts	8.0	0.82	71 in·lb	
12	Magneto Cover Bolts	10	1.0	89 in·lb	
13	Timing Inspection Cap	3.5	0.36	31 in·lb	
14	Flywheel Nut Cap	3.5	0.36	31 in·lb	
15	Crankshaft Sensor Bolts	7.0	0.71	62 in·lb	
16	Stator Coil Bolts	10	1.0	89 in·lb	L
17	Flywheel Nut	80	8.2	59	

18. DFI Setting Data Selection Connectors
19. Capacitor

G: Apply grease.
L: Apply a non-permanent locking agent.
LG: Apply liquid gasket.
R: Replacement Parts
Si: Apply silicone grease.

Specifications

Item	Standard
Flywheel Magneto	
Magneto Output Voltage	37 V or more @4 000 r/min (rpm)
Stator Coil Resistance	0.4 ~ 1.1 Ω @23°C (73°F)
Charging System	
Charging Voltage (Regulator/Rectifier Output Voltage)	14.0 ~ 14.5 V
Capacitor Internal Resistance	see text
Ignition System	
Ignition Timing	10° BTDC @2 000 r/min (rpm)
Ignition Coil:	
3 Needle Arcing Distance	7 mm (0.28 in.) or more
Primary Winding Resistance	0.28 ~ 0.38 Ω @20°C (68°F)
Secondary Winding Resistance	7.7 ~ 10.4 kΩ @20°C (68°F)
Primary Peak Voltage	150 V or more
Crankshaft Sensor Resistance	180 ~ 280 Ω @23°C (73°F)
Crankshaft Sensor Peak Voltage	5 V or more
Spark Plug:	
Type	NGK CPR8EB-9 or NGK CPR9EB-9
Gap	0.8 ~ 0.9 mm (0.03 ~ 0.04 in.)

Special Tools and Sealant

Rotor Puller, M16/M18/M20/M22 × 1.5:
57001-1216

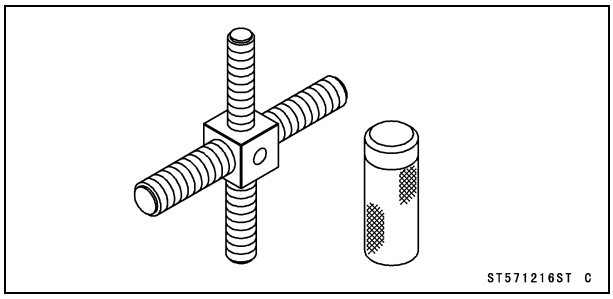

Flywheel Puller, M28 × 1.0:
57001-1471

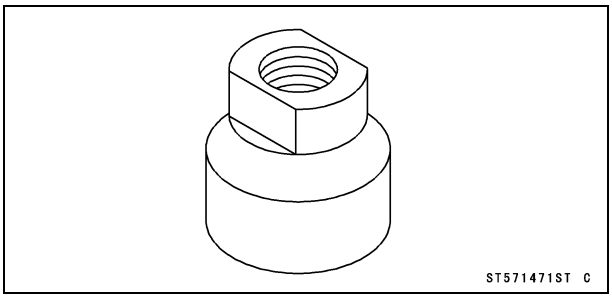

Timing Light:
57001-1241

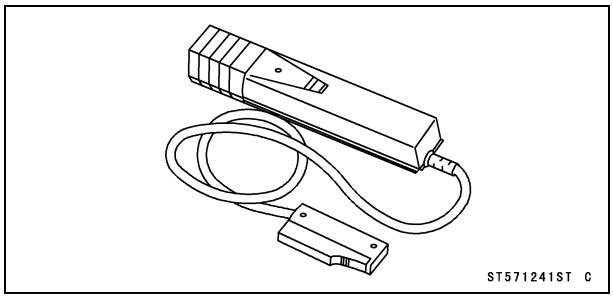

Grip:
57001-1591

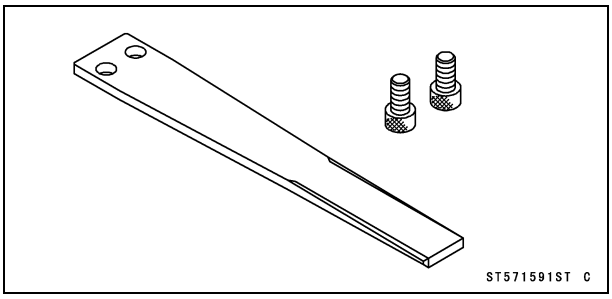

Peak Voltage Adapter:
57001-1415

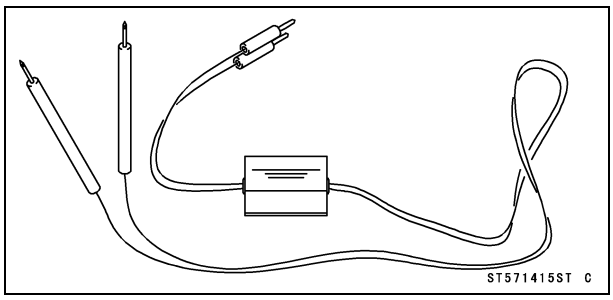

Measuring Adapter:
57001-1700

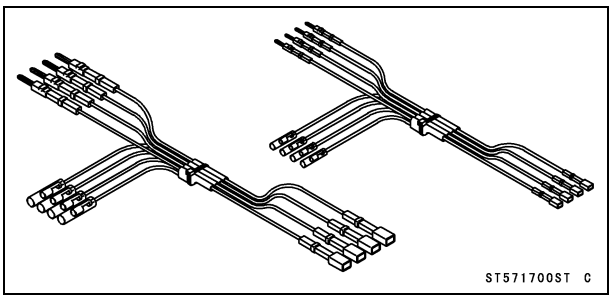

Filler Cap Driver:
57001-1454

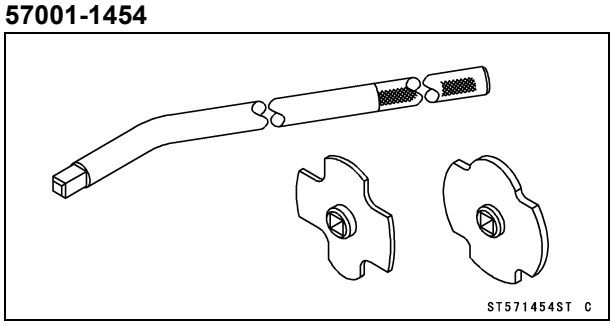

Rotor Holder:
57001-1730

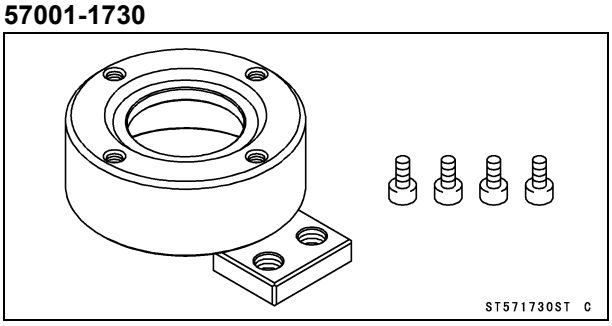

Needle Adapter Set:
57001-1457

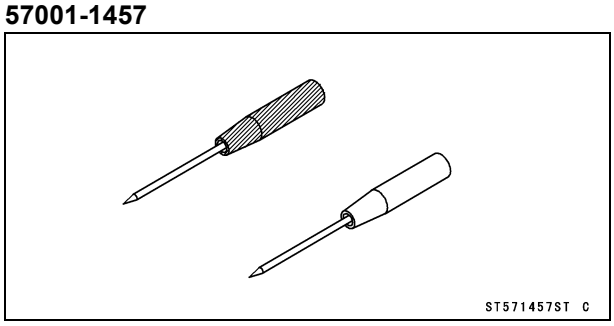

Liquid Gasket, TB1211F:
92104-0004

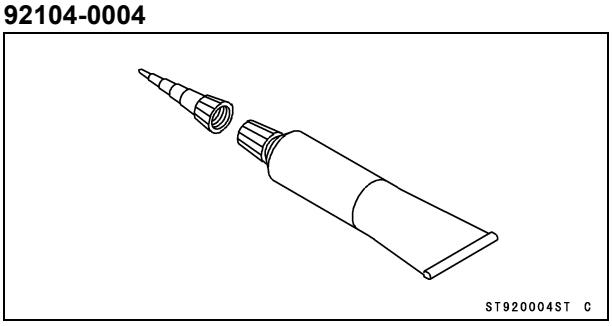

Wiring Diagram

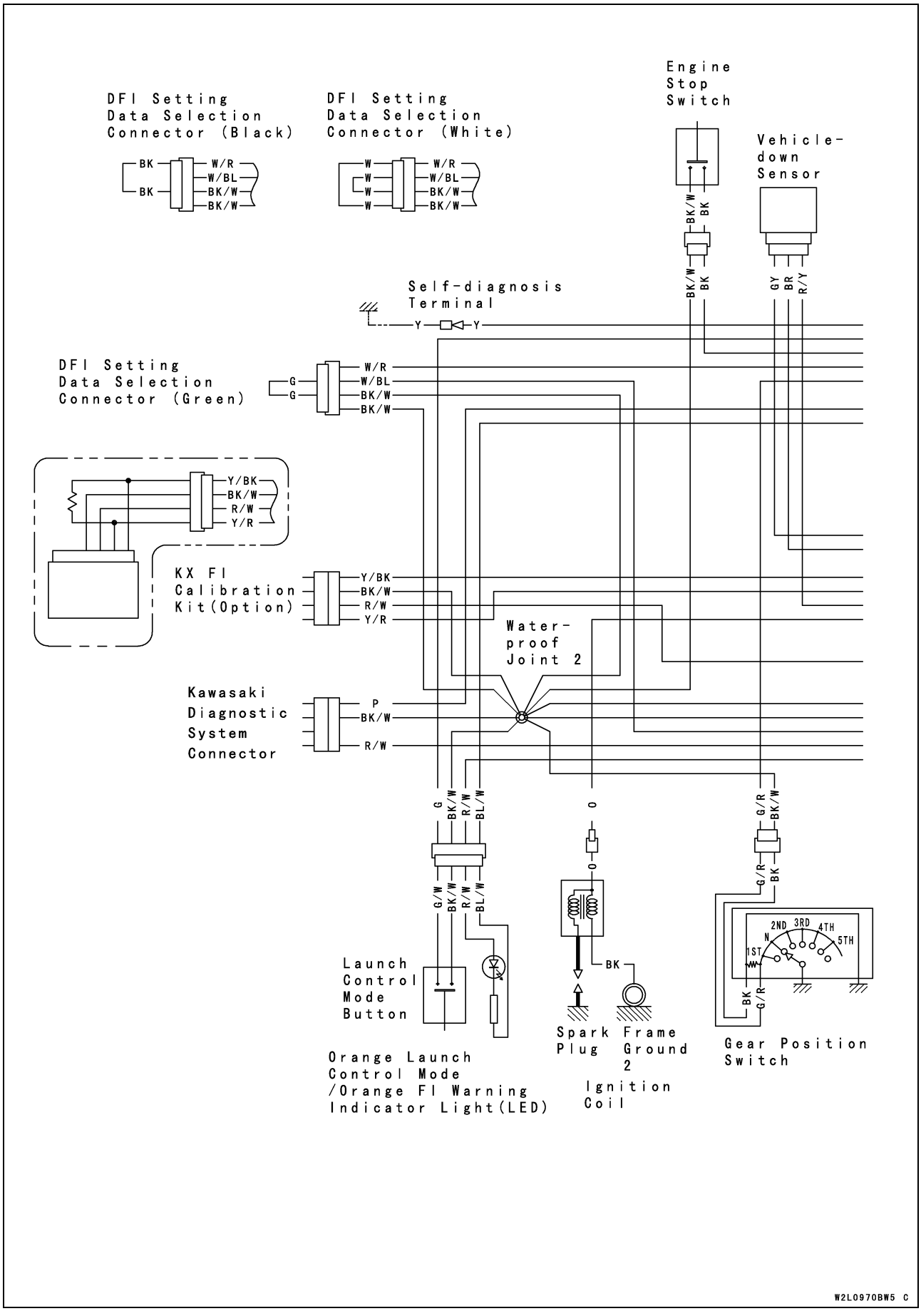

Wiring Diagram

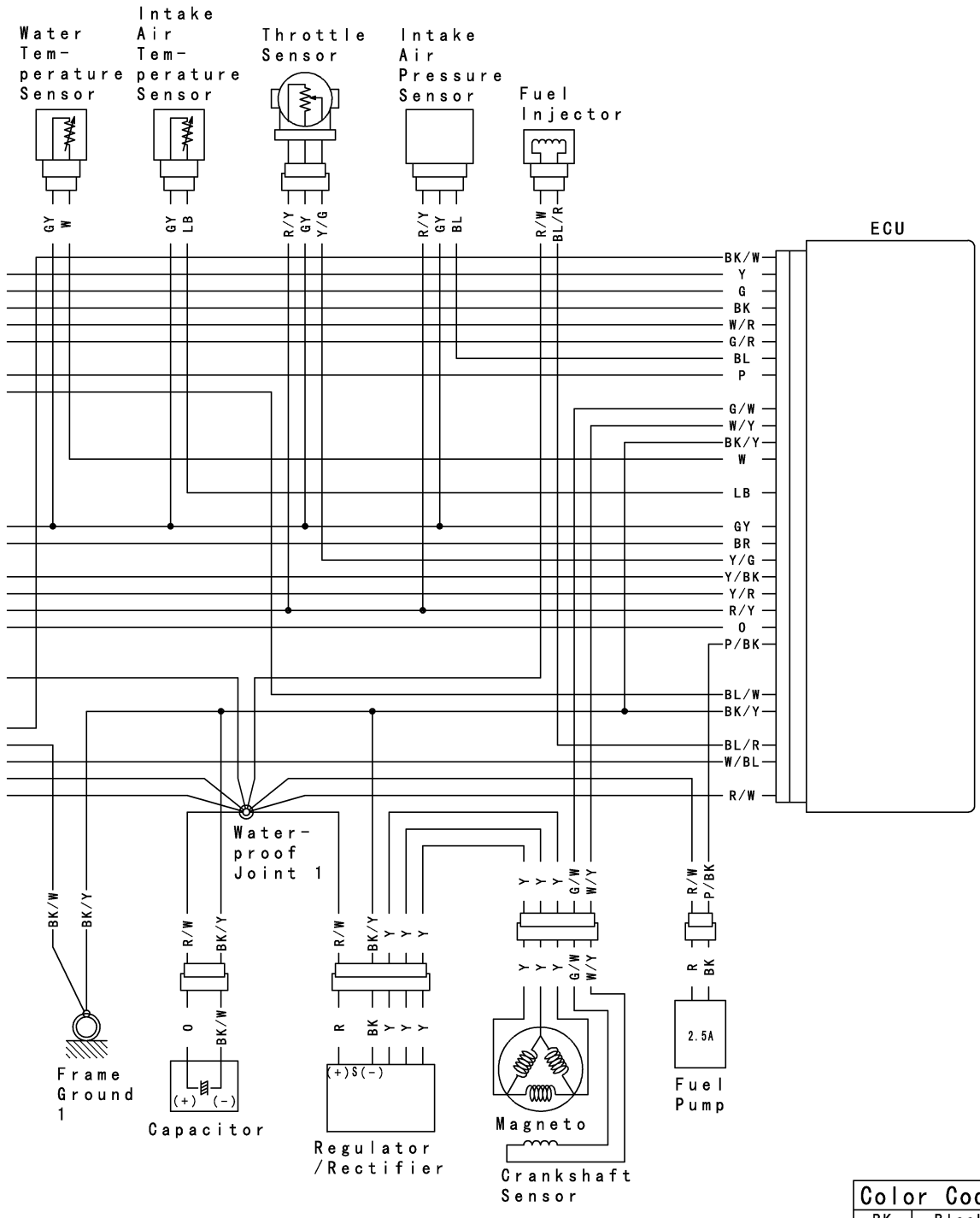

Color Code	
BK	Black
BL	Blue
BR	Brown
G	Green
GY	Gray
LB	Light Blue
O	Orange
P	Pink
R	Red
W	White
Y	Yellow

(98052-0970B)

W2R0970BW5 C

Precautions

There are numbers of important precautions that are musts when servicing electrical systems. Learn and observe all the rules below.

- The electrical parts should never be struck sharply, as with a hammer, or allowed to fall on a hard surface. Such a shock to the parts can damage them.
- To prevent damage to electrical parts, do not disconnect any electrical connections while the engine is running.
- Troubles may involve one or in some cases all items. Never replace a defective part without determining what CAUSED the failure. If the failure was caused by some other item or items, they too must be repaired or replaced, or the new replacement will soon fail again.
- Make sure all connectors in the circuit are clean and tight, and examine leads for signs of burning, fraying, etc. Poor leads and bad connections will affect electrical system operation.
- Measure coil and winding resistance when the part is cold (at room temperature).

Electrical Wiring

Wiring Inspection

- Visually inspect the wiring for signs of burning, fraying, etc.

★If any wiring is poor, replace the damaged wiring.

- Pull each connector [A] apart and inspect it for corrosion, dirt, and damage.

★If the connector is corroded or dirty, clean it carefully. If it is damaged, replace it.

- Check the wiring for continuity.

○Use the wiring diagram to find the ends of the lead which is suspected of being a problem.

○Connect a digital meter between the ends of the leads.

○Set the digital meter, and read the digital meter.

★If the digital meter does not read 0 Ω, the lead is defective. Replace the lead or the wiring harness if necessary.

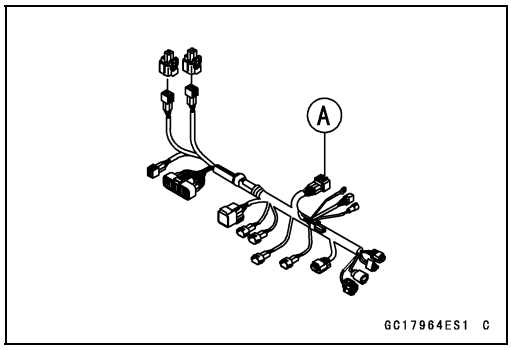

Flywheel Magneto

Magneto Cover Removal

- Drain the engine oil (see Engine Oil Change in the Periodic Maintenance chapter).
- Remove:
  Shift Pedal (see Shift Pedal Removal in the Crankshaft/Transmission chapter)
- Disconnect the magneto lead connector [A] from the main harness.
- Open the clamp [B] and then free the leads [C].

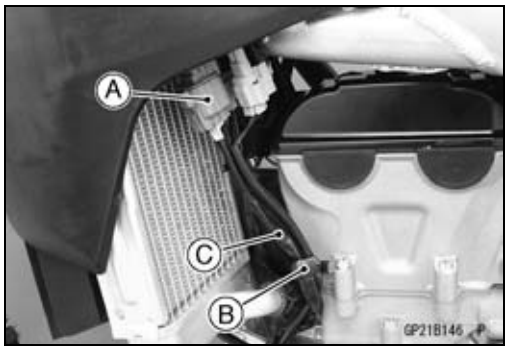

- Remove:
  Magneto Cover Bolts [A]
  Magneto Cover [B]

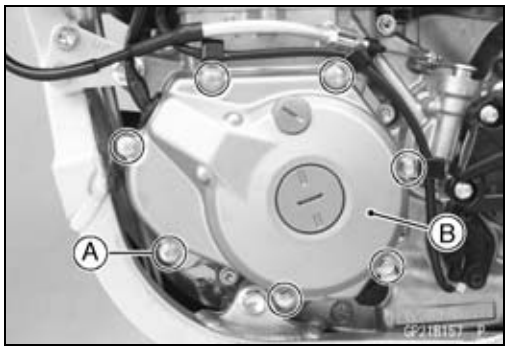

Magneto Cover Installation

- Replace the gasket [A] with a new one and install it.
- Be sure to install the dowel pins [B].

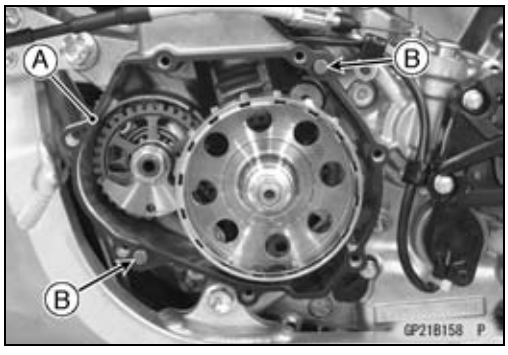

- Using a high flash-point solvent, clean off any oil or dirt that may be on the silicone sealant coating area. Dry them with a clean cloth.
- Apply liquid gasket to the area [A] to the magneto lead grommet.

  Sealant - Liquid Gasket, TB1211F: 92104-0004

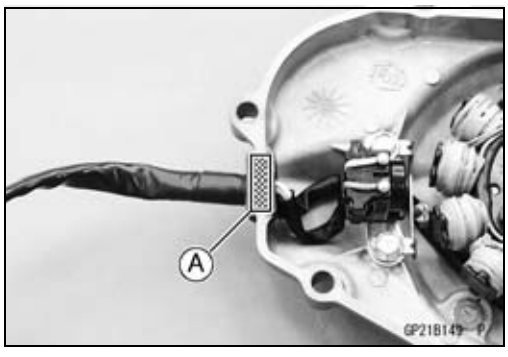

- Install:
  Magneto Cover [A]
  Clamps [B]
  Magneto Cover Bolts [C]
- Tighten:

  Torque - Magneto Cover Bolts: 10 N·m (1.0 kgf·m, 89 in·lb)
- Run the loads and hose according to the Cable, Wire, and Hose Routing section in the Appendix chapter.
- Connect the magneto lead connector.
- Install the removed parts (see appropriate chapters).

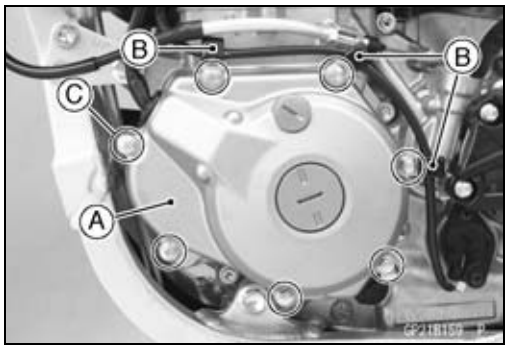

Flywheel Removal

- Remove the magneto cover (see Magneto Cover Removal).

Flywheel Magneto

- Hold the flywheel steady with the rotor holder [A], and remove the flywheel nut [B].

  Special Tools - Grip [C]: 57001-1591
  Rotor Holder: 57001-1730

- Remove the rotor holder.

- Install the flywheel puller [A] to the flywheel.
- Install the rotor puller [B] to the flywheel puller.
- Remove the flywheel from the crankshaft by turning in the rotor puller and tapping the head of the puller lightly with a hammer, while holding the puller body steady. There is a woodruff key in the crankshaft tapered portion.

  Special Tools - Rotor Puller, M16/M18/M20/M22 × 1.5: 57001-1216
  Flywheel Puller, M28 × 1.0: 57001-1471

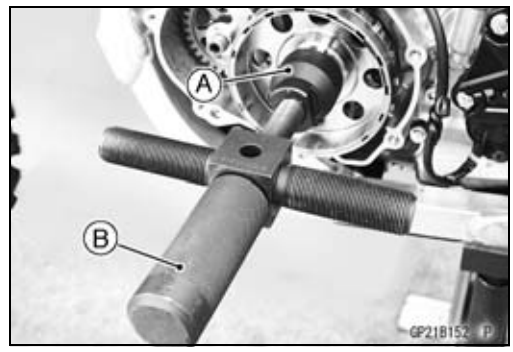

NOTICE
Never strike the grab bar or the flywheel itself. Striking the bar can bond it. If the flywheel is struck, the magnets may lose their magnetism.

- Remove:
  Woodruff Key

Flywheel Installation

- Using a high flash-point solvent, clean off any oil or dirt on the following portions and dry them with a clean cloth.
  Crankshaft Tapered Portion [A]
  Flywheel Tapered Portion [B]
- Fit the woodruff key [C] securely in the slot of the crankshaft.
- Install the flywheel according to the following procedures.

NOTE

○*Confirm the flywheel fit or not to the crankshaft before tightening it with specified torque.*

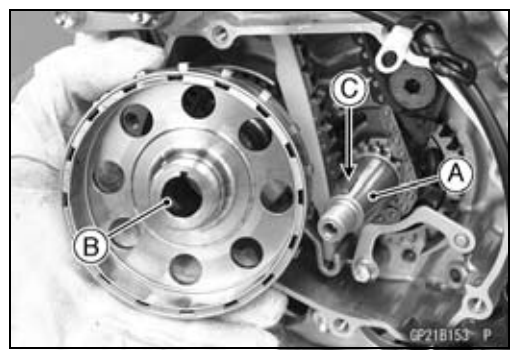

- Install the flywheel.
- Hold the flywheel steady with the rotor holder, and tighten the flywheel nut with 55 N·m (5.6 kgf·m, 41 ft·lb) of torque.

  Special Tools - Grip: 57001-1591
  Rotor Holder: 57001-1730

- Remove the flywheel nut.
- Check the tightening torque with rotor puller and a bolt (M16/P1.5, L = 50 mm (2.0 in.) or more).

  Special Tool - Flywheel Puller, M28 × 1.0: 57001-1471

★If the flywheel is not pulled out with 20 N·m (2.0 kgf·m, 15 ft·lb) of drawing torque, it is installed correctly.

★If the flywheel is pulled out with under 20 N·m (2.0 kgf·m, 15 ft·lb) of drawing torque, clean off any oil dirt or flaw of the crankshaft and flywheel tapered portion, and dry them with a clean cloth. Then, confirm that it is not pulled out with above torque.

- Hold the flywheel steady with the rotor holder, and tighten the flywheel nut.

  Special Tools - Grip: 57001-1591
  Rotor Holder: 57001-1730

  Torque - Flywheel Nut: 80 N·m (8.2 kgf·m, 59 ft·lb)
- Install the magneto cover (see Magneto Cover Installation).

Stator Coil Removal

- Remove:
  Magneto Cover (see Magneto Cover Removal)
  Stator Coil Bolts [A]
  Crankshaft Sensor Bolts [B]
  Holder [C]
  Magneto Lead Grommet [D]
- Remove the stator coil [E] and crankshaft sensor [F] as a set.

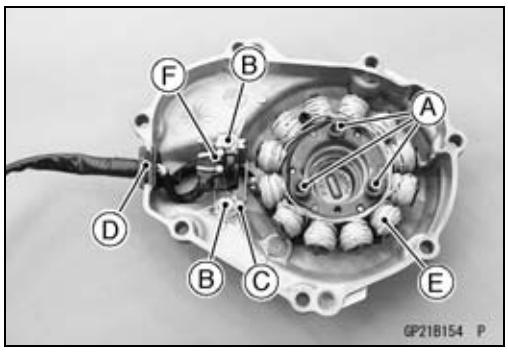

Stator Coil Installation

- Apply a non-permanent locking agent to the threads of the stator coil bolts.
- Install the stator coil and crankshaft sensor as a set.
- Tighten:

  Torque - Stator Coil Bolts: 10 N·m (1.0 kgf·m, 89 in·lb)
- Install the holder [A] and tighten the crankshaft sensor bolts.

○Hold the magneto lead with the guide [B] of the wiring holder.

  Torque - Crankshaft Sensor Bolts: 7.0 N·m (0.71 kgf·m, 62 in·lb)

- Using a high flash-point solvent, clean off any oil or dirt that may be on the silicone sealant coating area. Dry them with a clean cloth.
- Apply liquid gasket to the circumference of the magneto lead grommet [C], and fit the grommet into the notch of the cover securely.

  Sealant - Liquid Gasket, TB1211F: 92104-0004
- Install the magneto cover (see Magneto Cover Installation).

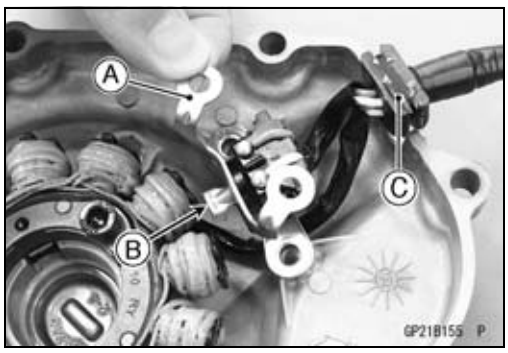

Flywheel Magneto

Flywheel Magneto Inspection

There are three types of magneto problems: short, open (lead burned out), or loss in flywheel magnetism. A short or open in one of the coil leads will result in either a low output, or no output at all. A loss in flywheel magnetism, which may be caused by dropping or hitting the flywheel by leaving it near an electromagnetic field, or just by aging, will result in low output.

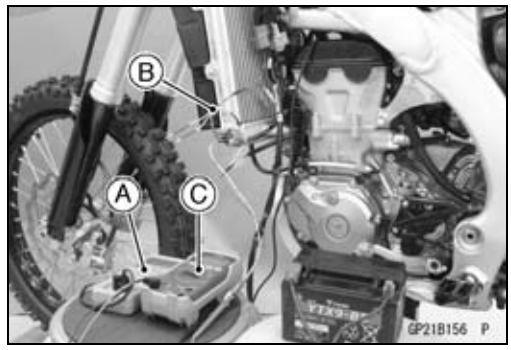

NOTE

○*Be sure the prepared battery is fully charged.*

- Check the magneto output voltage, do the following procedures.
- Remove the left radiator shroud (see Radiator Shroud Removal in the Frame chapter).
- Disconnect the magneto lead connector (see Magneto Cover Removal).
- Use the engine revolution tester [A] for high accuracy.
- Connect the measuring adapter [B] between the disconnected connectors.
- Connect a tester [C] to the magneto lead connector.
  Main Harness [D]
  Flywheel [E]

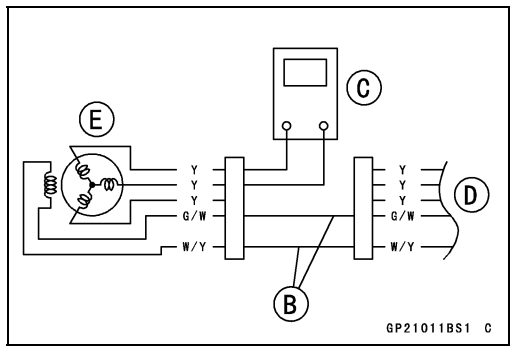

Special Tool - Measuring Adapter: 57001-1700

- Refer to the Self-diagnosis Procedures in the Fuel System (DFI) chapter, connect the 12 V battery to the main harness.
- Start the engine.
- Run it at the rpm given in the table 1.
- Note the voltage readings (total 3 measurements).

Table 1 Magneto Output Voltage **@4 000 r/min (rpm)**

Connections		Reading
Tester (+) to	Tester (–) to	
One yellow lead	Another yellow lead	AC 37 V or more

★If the output voltage shows the value in the table, the magneto operates properly.

★If the output voltage shows a much lower reading than that given in the table indicates that the magneto is defective.

- To check the stator coil resistance as follows.
- Stop the engine.
- Connect the tester as shown in the table 2.
- Note the resistance readings (total 3 measurements).

Table 2 Stator Coil Resistance **@23°C (73°F)**

Connections		Reading
Tester (+) to	Tester (–) to	
One yellow lead	Another yellow lead	0.4 ~ 1.1 Ω

Flywheel Magneto

★If there is more resistance than shown in the table, or no tester reading (infinity), the stator has an open lead and must be replaced. Much less than this resistance means the stator is shorted, and must be replaced.

● Using the highest resistance range of the tester, measure the resistance between each leads and chassis ground.

★Any tester reading less than infinity (∞) indicates a short, necessitating stator replacement.

★If the stator coil has normal resistance, but the voltage check showed the magneto to be defective; then the flywheel have probably weakened, and the flywheel must be replaced.

Charging System

Regulator/Rectifier Removal

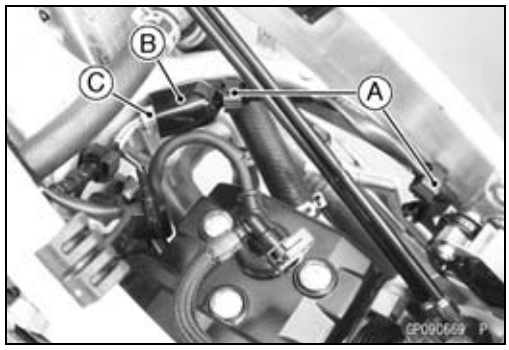

- Remove:
  Fuel Tank (see Fuel Tank Removal in the Fuel System (DFI) chapter)
- Open the clamps [A], and free the leads.
- Slide the dust cover [B].
- Disconnect the regulator/rectifier lead connector [C].

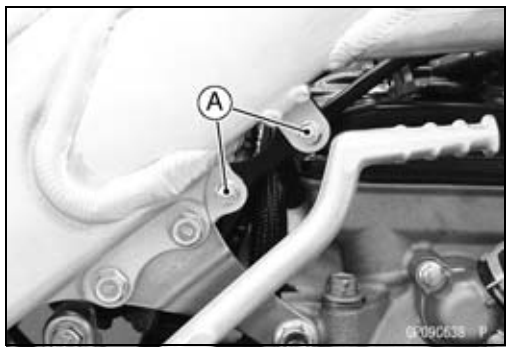

- Remove:
  Regulator/Rectifier Bracket Bolts [A]

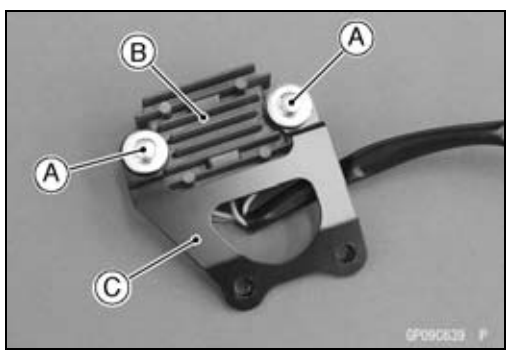

- Remove:
  Regulator/Rectifier Bolts [A] and Nuts
  Collar
  Regulator/Rectifier [B]
  Bracket [C]

Regulator/Rectifier Installation

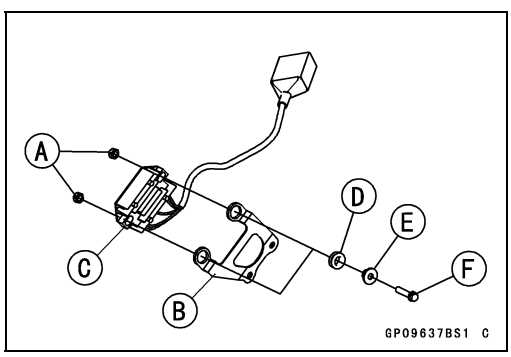

- Replace the regulator/rectifier nuts [A] with new ones.
- Assemble:
  Bracket [B]
  Regulator/Rectifier [C]
  Damper [D]
  Collar [E]
  Regulator/Rectifier Bolts [F]
- Tighten:

  Torque - Regulator/Rectifier Nuts: 8.0 N·m (0.82 kgf·m, 71 in·lb)
  Regulator/Rectifier Bracket Bolt: 8.0 N·m (0.82 kgf·m, 71 in·lb)

- Run the regulator/rectifier lead according to the Cable, Wire, and Hose Routing section in the Appendix chapter.
- Connect the regulator/rectifier lead connector.
- Install the fuel tank (see Fuel Tank Installation in the Fuel System (DFI) chapter).

Regulator/Rectifier Output Voltage Inspection

NOTE

○*Be sure the prepared battery is fully charged.*

Charging System

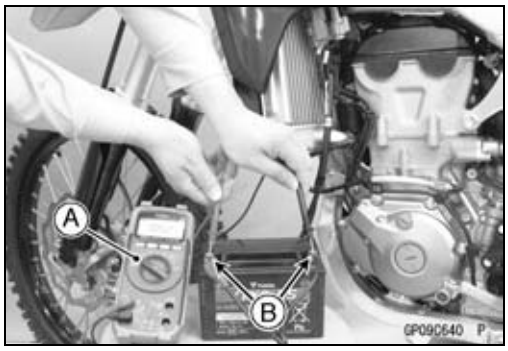

- Connect the 12 V battery to the main harness (see Self -diagnosis Procedures in the Fuel System (DFI) chapter).
- Connect a tester [A] to the battery terminals [B].
- Start the engine, and note the voltage readings at various engine speeds. But they must be kept the specified voltage.

Charging Voltage

Connections		Reading
Tester (+) to	Tester (–) to	
Battery (+)	Battery (–)	DC 14.0 ~ 14.5 V

- Stop the engine.

★If the charging voltage is kept between the values given in the table, the charging system is considered to be working normally.

★If the charging voltage is much higher than the values specified in the table, the regulator/rectifier is defective or the regulator/rectifier leads are loose or open.

★If the charging voltage does not rise as the engine speed increases, then the regulator/rectifier is defective or the magneto output is insufficient for the loads. Check the magneto and regulator/rectifier to determine which part is defective.

Regulator/Rectifier Inspection

- Refer to the Charging System Troubleshooting for the Regulator/Rectifier Inspection.

Charging System

Charging System Troubleshooting

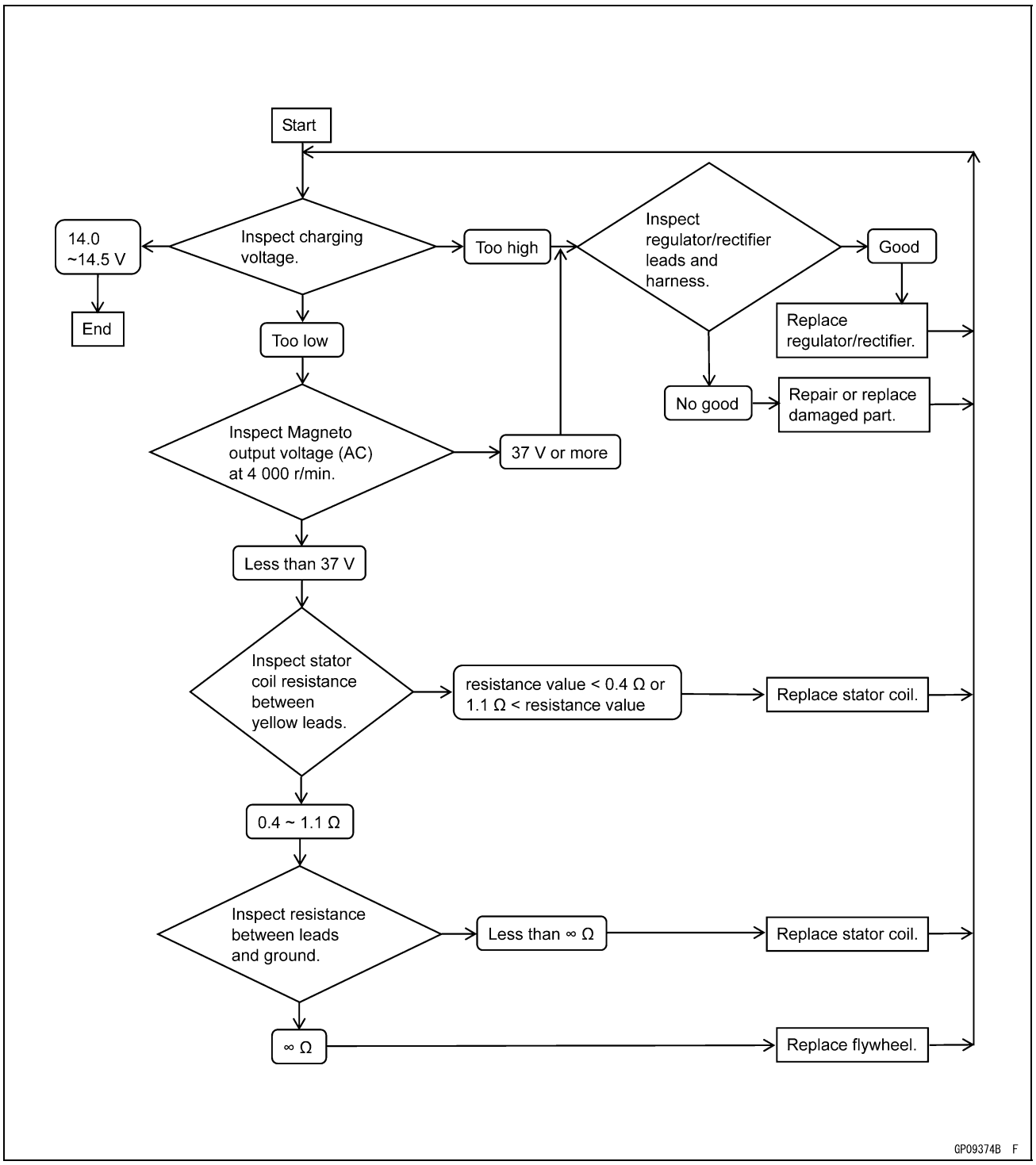

★If the charging system is correct, check the ignition system (see Ignition System section). If the ignition system is correct, replace the capacitor (see Capacitor Removal/Installation).

Capacitor Removal

- Remove the left radiator with the water hose installed (see Radiator Removal in the Cooling System).
- Disconnect the capacitor lead connector [A].

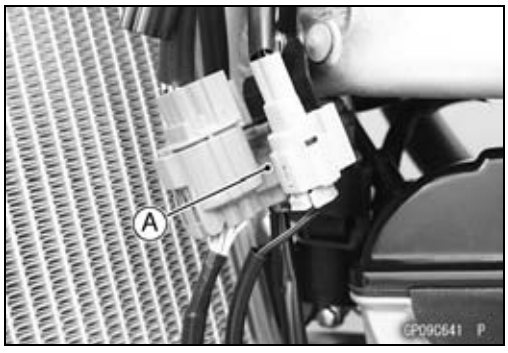

- Remove:
  Capacitor Bracket Bolt [A]
  Capacitor [B]
  Bracket [C]

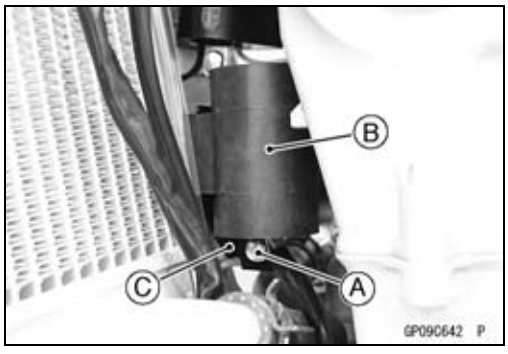

Capacitor Installation

- Installation is the reverse of removal.

  Torque - Capacitor Bracket Bolt: 8.0 N·m (0.82 kgf·m, 71 in·lb)

- Run the capacitor lead according to the Cable, Wire, and Hose Routing section in the Periodic Maintenance chapter.

Ignition Timing

Ignition Timing Inspection

- Remove the timing inspection cap [A].

  Special Tool - Filler Cap Driver: 57001-1454

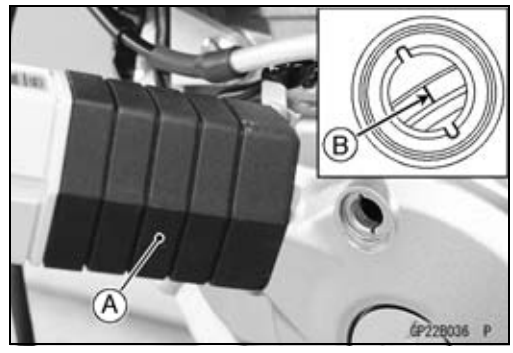

- Attach the timing light [A] to the ignition coil lead in the manner prescribed by the manufacturer.

  Special Tool - Timing Light: 57001-1241
- Start the engine and aim the timing light at the TDC mark [B] on the flywheel.
- Run the engine at the speeds specified and note the alignment of the TDC mark.

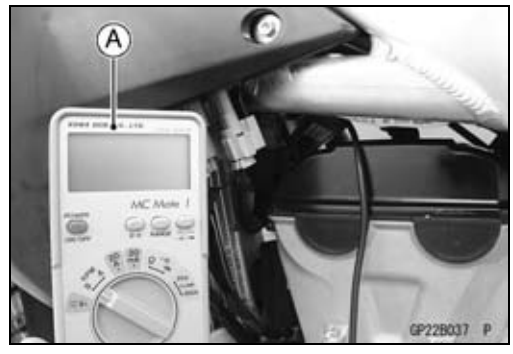

○Check the engine speed, using the engine revolution tester [A] for high accuracy.

Ignition Timing

Engine speed [r/min (rpm)]	Hole groove aligns with:
2 000	Line mark on flywheel

★If the ignition timing is incorrect, check the crankshaft sensor (see Crankshaft Sensor Inspection).
★If the crankshaft sensor is normal, replace the ECU.
- Replace the timing inspection cap O-ring with a new one.
- Apply grease to the O-ring.
- Tighten the timing inspection cap.

  Special Tool - Filler Cap Driver: 57001-1454

  Torque - Timing Inspection Cap: 3.5 N·m (0.36 kgf·m, 31 in·lb)

Ignition System

Safety Instructions

⚠ WARNING

The ignition system produces extremely high voltage. Do not touch the spark plug, ignition coil or ignition coil lead while the engine is running, or you could receive a severe electrical shock.

Ignition Coil Removal

- Remove:
  Fuel Tank (see Fuel Tank Removal in the Fuel System (DFI) chapter)
  Capacitor (see Capacitor Removal)
  Vehicle-down Sensor (see Vehicle-down Sensor Removal in the Fuel System (DFI) chapter)
  Vehicle-down Sensor Bracket Bolt [A]
  Bracket [B]

- Disconnect the primary lead connector [A].
- Pull off the spark plug cap [B] .

NOTICE

When removing the spark plug cap, do not pull the lead. The lead could be broken off or damaged the wires inside.

- Remove:
  Ignition Coil Bolts [A]
  Ignition Coil [B]

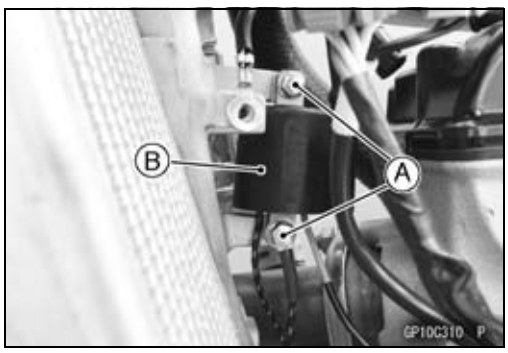

Ignition Coil Installation

- Run the leads according to the Cable, Wire, and Hose Routing section in the Appendix chapter.
- Install:
  Ignition Coil [A]
  Ignition Coil Ground Lead [B]
- Tighten:

  Torque - Ignition Coil Bolts [C]: 8.0 N·m (0.82 kgf·m, 71 in·lb)
- Connect the primary lead connector.

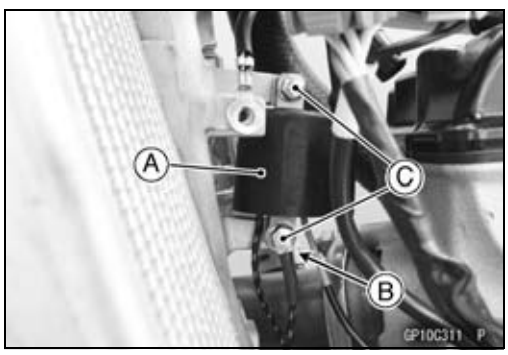

Ignition System

- Install:
  Vehicle-down Sensor Bracket [A]
  Frame Ground Lead [B]
- Tighten:

Torque - Vehicle-down Sensor Bracket Bolt [C]: 7.0 N·m (0.71 kgf·m, 62 in·lb)

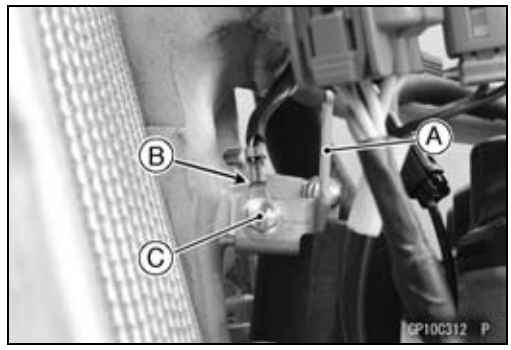

- Install the spark plug cap [A] so that it is aligned with the line [B] on the cylinder head cover.
- Pull up the spark plug cap lightly to make sure of the installation of the spark plug cap.
- Install the removed parts (see appropriate chapters).

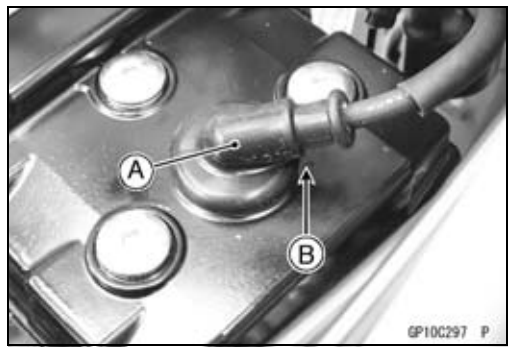

Ignition Coil Inspection

Measuring Arcing Distance

The most accurate test for determining the condition of the ignition coil is made by measuring arcing distance using the coil tester for the 3-needle method.

- Remove the ignition coil (see Ignition Coil Removal).
- Measure the arching distance using the coil tester [A].
- Connect the ignition coil (with the spark plug cap left installed on the spark plug lead) [B] to the tester and measure the arcing distance.

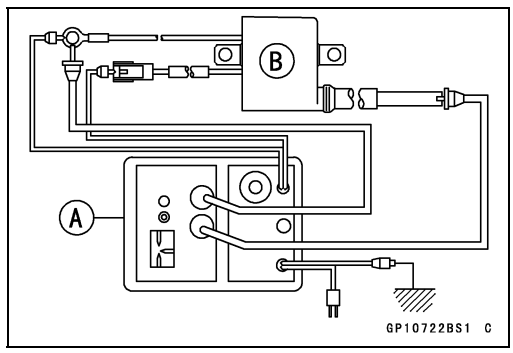

⚠ WARNING

To avoid extremely high voltage shocks, do not touch the coil or lead.

★If the distance reading is less than the specified value, the ignition coil or spark plug cap is defective.

3 Needle Arcing Distance
Standard: 7 mm (0.28 in.) or more

- To determine which part is defective, measure the arcing distance again with the spark plug cap removed from the spark plug lead.

★If the arcing distance is subnormal as before, the trouble is with the ignition coil itself. If the arcing distance is now normal, the trouble is with the spark plug cap.

Measuring Coil Resistance

If the arcing tester is not available, the coil can be checked for a broken or badly shorted winding with a digital meter. However, the digital meter cannot detect layer shorts and shorts resulting from insulation breakdown under high voltage.

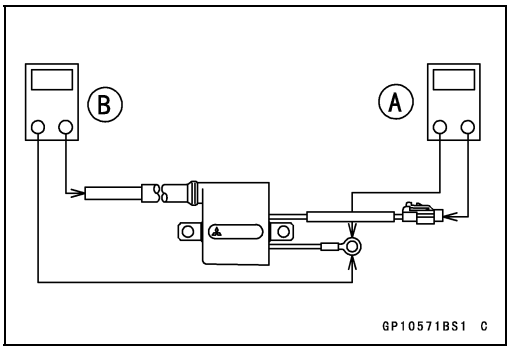

- Remove the ignition coil (see Ignition Coil Removal).
- Measure the primary winding resistance [A] as follows.
  - ○Connect the digital meter between the coil terminals.
  - ○Set the digital meter, and read the digital meter.
- Measure the secondary winding resistance [B] as follows.
  - ○Remove the spark plug cap from the spark plug lead.
  - ○Connect the digital meter between the spark plug lead and the ground lead terminal.
  - ○Set the digital meter, and read the digital meter.

Ignition Coil Winding Resistance

Primary Windings:	**0.28 ~ 0.38 Ω @20°C (68°F)**
Secondary Windings:	**7.7 ~ 10.4 kΩ @20°C (68°F)**

★If the digital meter does not read as specified, replace the ignition coil.

★If the digital meter reads as specified, the ignition coil windings are probably good. However, if the ignition system still does not perform as it should after all other components have been checked, test replace the coil with one known to be good.

- Check the spark plug lead for visible damage.

★If the spark plug lead is damaged, replace the ignition coil.

Spark Plug Cleaning and Inspection

- Refer to the Spark Plug Cleaning and Inspection in the Periodic Maintenance chapter.

Spark Plug Gap Inspection

- Refer to the Spark Plug Cleaning and Inspection in the Periodic Maintenance chapter.

Ignition System

Ignition Coil Primary Peak Voltage Check

- Remove the spark plug cap from the spark plug, but do not remove the spark plug.

NOTICE
When removing the spark plug cap, do not pull the lead. The lead could be broken off or damaged the wires inside.

- Install the good spark plug [A] to the spark plug cap, then touch the frame with it.

NOTE

○*Measure the voltage with each lead connected correctly. The correct value may not be obtained if disconnected.*

○*Maintain the correct value of compression pressure for the cylinder (Be sure to measure the voltage with the spark plug installed to the cylinder head.)*

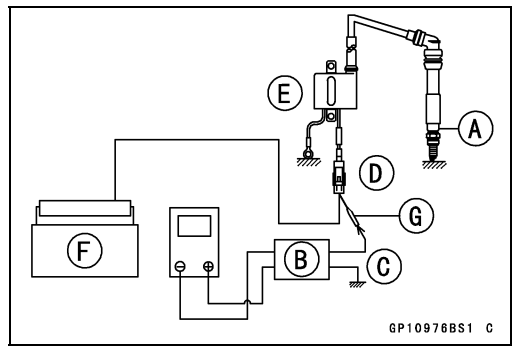

- Connect the peak voltage adapter [B] to a digital meter.

Special Tools - Peak Voltage Adapter: 57001-1415
Type: KEK-54-9-B
Needle Adapter Set: 57001-1457

- Connect the peak voltage adapter to the ignition coil terminal and ground.

Connections:

		Peak Voltage Adapter		Digital Meter
Ground [C]	←	**BK lead**	→	**(–)**
Terminal (O Lead) [D]	←	**R lead**	→	**(+)**

Ignition Coil [E]
ECU [F]
Needle Adapter [G]

- Shift the gear to the neutral position.
- Crank the engine by kicking the pedal several times to measure the peak voltage of the ignition coil.

Ignition Coil Primary Peak Voltage
Standard: 150 V or more

⚠ WARNING
Electrical equipment can cause serious electrical shock. To avoid being shocked, do not touch the metal portion of the probe when measuring voltage.

★If the voltage is less than the specified value, see the Troubleshooting on next page.

IC Igniter Inspection

○The IC igniter is built in the ECU.

- Refer to the following items.
  Ignition System Troubleshooting (see Ignition System section)
  ECU Power Supply Inspection (see ECU Power Supply Inspection in the Fuel System (DFI) chapter)

Ignition System

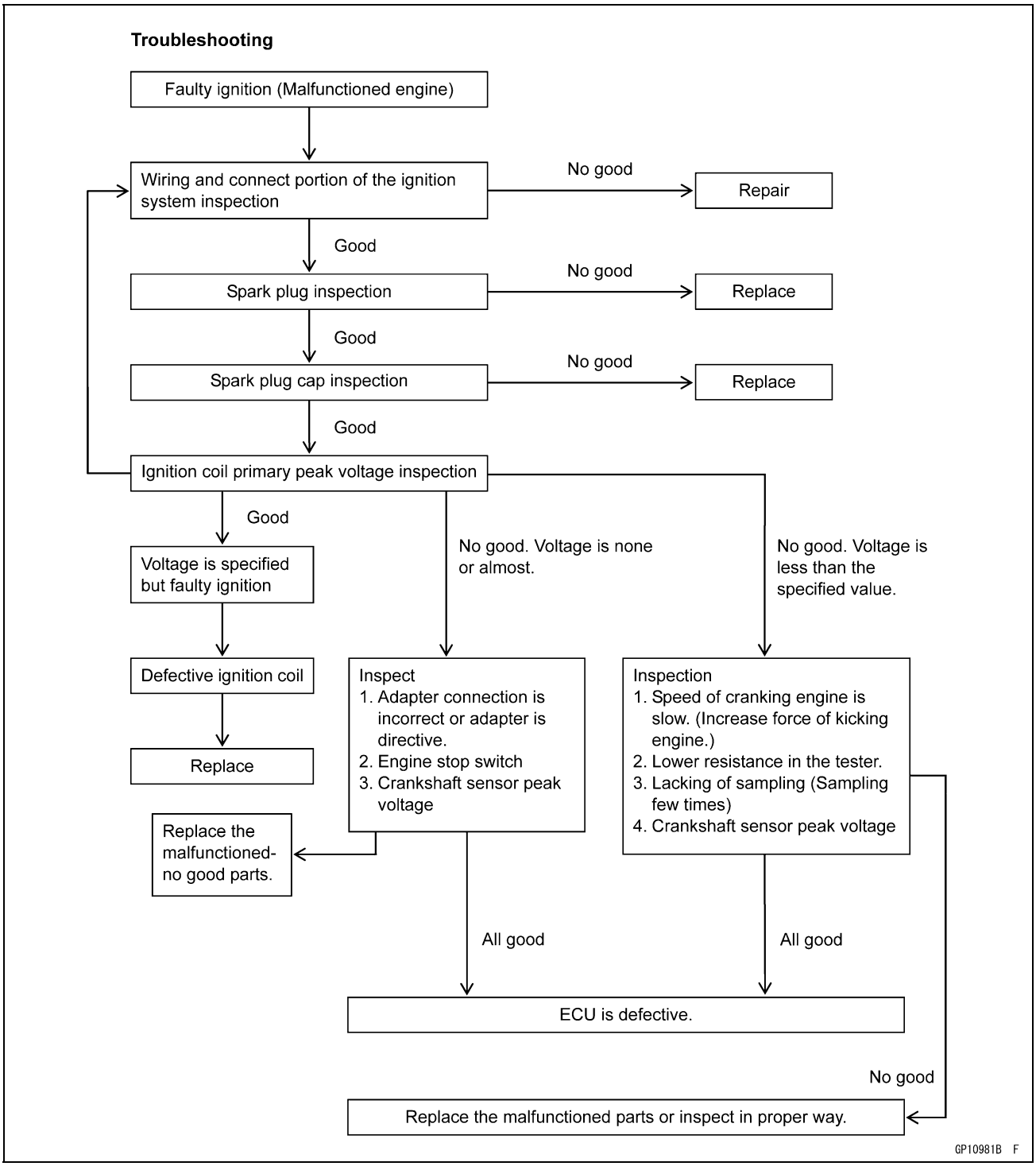

★If the ignition system is correct, check the charging system (see Charging System section). If the charging system is correct, replace the capacitor (see Capacitor Removal/Installation).

Ignition System

Crankshaft Sensor Peak Voltage Check

- Disconnect the magneto lead connector (see Magneto Cover Removal).

NOTE

○*Measure the voltage with each lead connected correctly. The correct value may not be obtained if disconnected.*

○*Maintain the correct value of compression pressure for the cylinder (Be sure to measure the voltage with the spark plug installed to the cylinder head).*

⚠ WARNING

Electrical equipment can cause serious electrical shock. To avoid being shocked, do not touch the metal portion of the probe when measuring voltage.

- Set a digital meter, and connect it to the peak voltage adapter [A].

Special Tool - Peak Voltage Adapter: 57001-1415
Type: KEK-54-9-B

- Connect the adapter to the terminals of the magneto lead connector [B].

Connections:

Magneto Lead Connector		Peak Voltage Adapter		Digital Meter
G/W lead [C]	←	R lead	→	(+)
W/Y lead [D]	←	BK lead	→	(–)

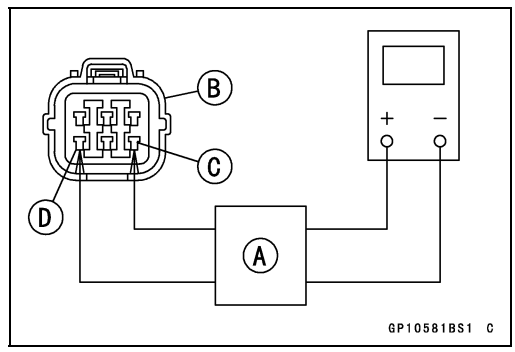

- Shift the gear to the neutral position.
- Crank the engine by kicking the pedal several times to measure the peak voltage of the crankshaft sensor.

Crankshaft Sensor Peak Voltage
Standard: 5 V or more

★If the voltage is less than the specified, check the crankshaft sensor (see Crankshaft Sensor Inspection).

Crankshaft Sensor Inspection

- Disconnect the magneto lead connector (see Magneto Cover Removal).
- Set a digital meter [A] and connect it to the Green/White [B] and White/Yellow [C] leads in the connector.

Crankshaft Sensor Resistance
Standard: 180 ~ 280 Ω @23°C (73°F)

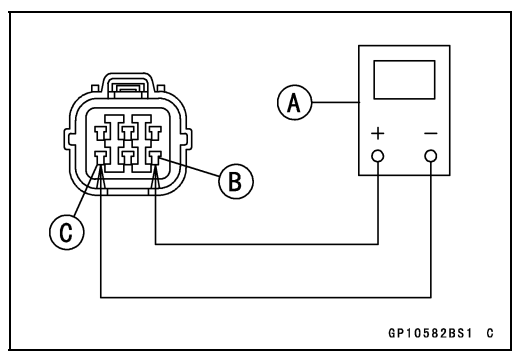

★If there is more resistance than the specified value, the coil has an open lead and must be replaced. Much less than this resistance means the coil is shorted, and must be replaced.

- Using the highest resistance range of the digital meter, measure the resistance between the crankshaft sensor leads and chassis ground.

★Any digital meter reading less than infinity (∞) indicates a short, necessities replacement of the crankshaft sensor assembly.

Engine Stop Switch System Check

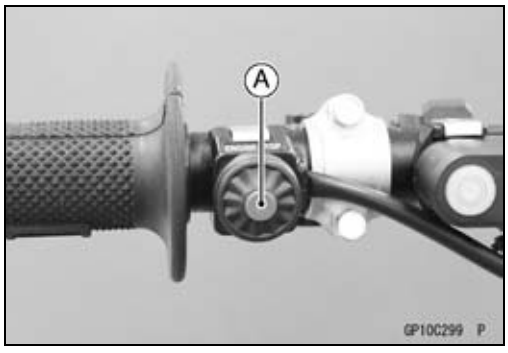

- Start the engine.
- Push the engine stop switch [A], stop the engine.

★If the engine does not stop, check the engine stop switch for continuity (see Engine Stop Switch Inspection).
★If the engine stop switch is good, check the wiring (see Wiring Inspection).
★If the wiring is good, replace the ECU.

Launch Control Mode Button System Check

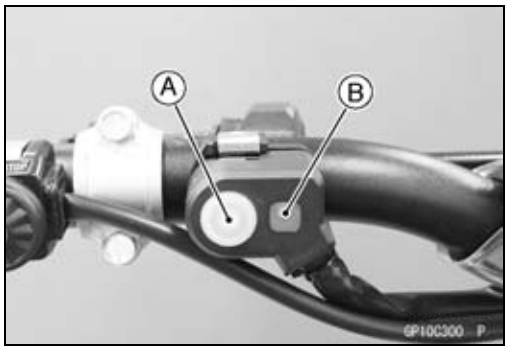

- Start the engine.
- Shift the gear to the neutral, 1st or 2nd position.
- Push the launch control mode button [A] for more than two seconds.

○The orange launch control mode indicator light (LED) [B] will blink to indicate the system is operating.

- Apply the clutch lever and shift the gear to the 3rd position to deactivate the system.

○The orange launch control mode indicator light (LED) should stop blinking.
★If the launch control mode system does not work as above, check the following items.
Launch Control Mode Button (see Launch Control Mode Button Inspection)
Orange Launch Control Mode Indicator Light (LED) (see Orange FI Warning Indicator Light (LED) Inspection in the Fuel System (DFI) chapter)
Wiring (see Wiring Inspection)
★If the all parts are good condition, replace the ECU.

DFI Setting Data Selection Connector Inspection

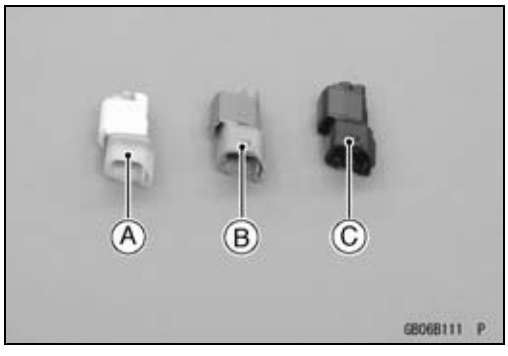

White Connector [A] (for Soft Track Condition)
Green Connector [B] (for Standard)
Black Connector [C] (for Hard Track Condition)

Ignition System

- Check the wiring for continuity between the terminals of each connector referring the connector circuit.
  White Connector [A]
  Green Connector [B]
  Black Connector [C]

★If a digital meter [D] does not read 0 Ω, the connector is defective. Replace the connector with a new one.

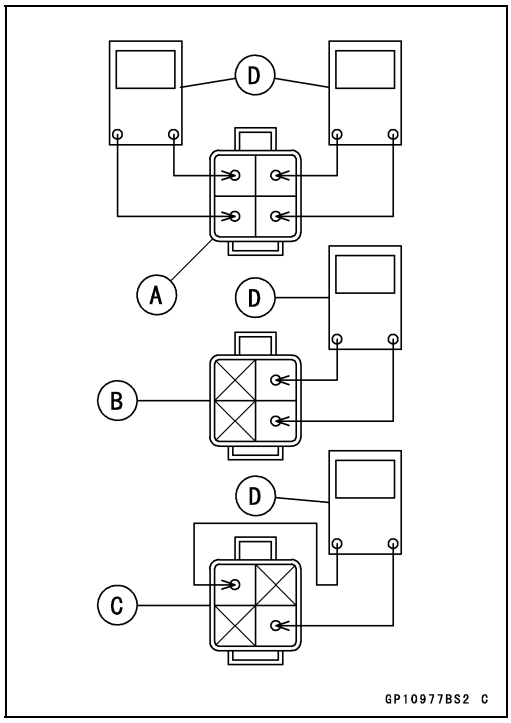

Switches

Engine Stop Switch Inspection

- Using a digital meter, check to see that the connections shown in the table have continuity (about zero ohms).

★If the switch has an open or short, replace it with a new one.

Engine Stop Switch Connection

	BK/W	BK
Push	○	○
Release		

Launch Control Mode Button Inspection

- Using a digital meter, check to see that the connections shown in the table have continuity (about zero ohms).

★If the switch has an open or short, replace it with a new one.

Launch Control Mode Button Connection

	BK/W	G/W
Push	○	○
Release		

Gear Position Switch Removal

- Refer to the Gear Position Switch Removal in the Fuel System (DFI) chapter.

Gear Position Switch Installation

- Refer to the Gear Position Switch Installation in the Fuel System (DFI) chapter.

Gear Position Switch Inspection

- Refer to the Gear Position Switch Inspection in the Fuel System (DFI) chapter.

Appendix

Table of Contents

Cable, Wire, and Hose Routing 17-2
Troubleshooting Guide 17-20

Cable, Wire, and Hose Routing

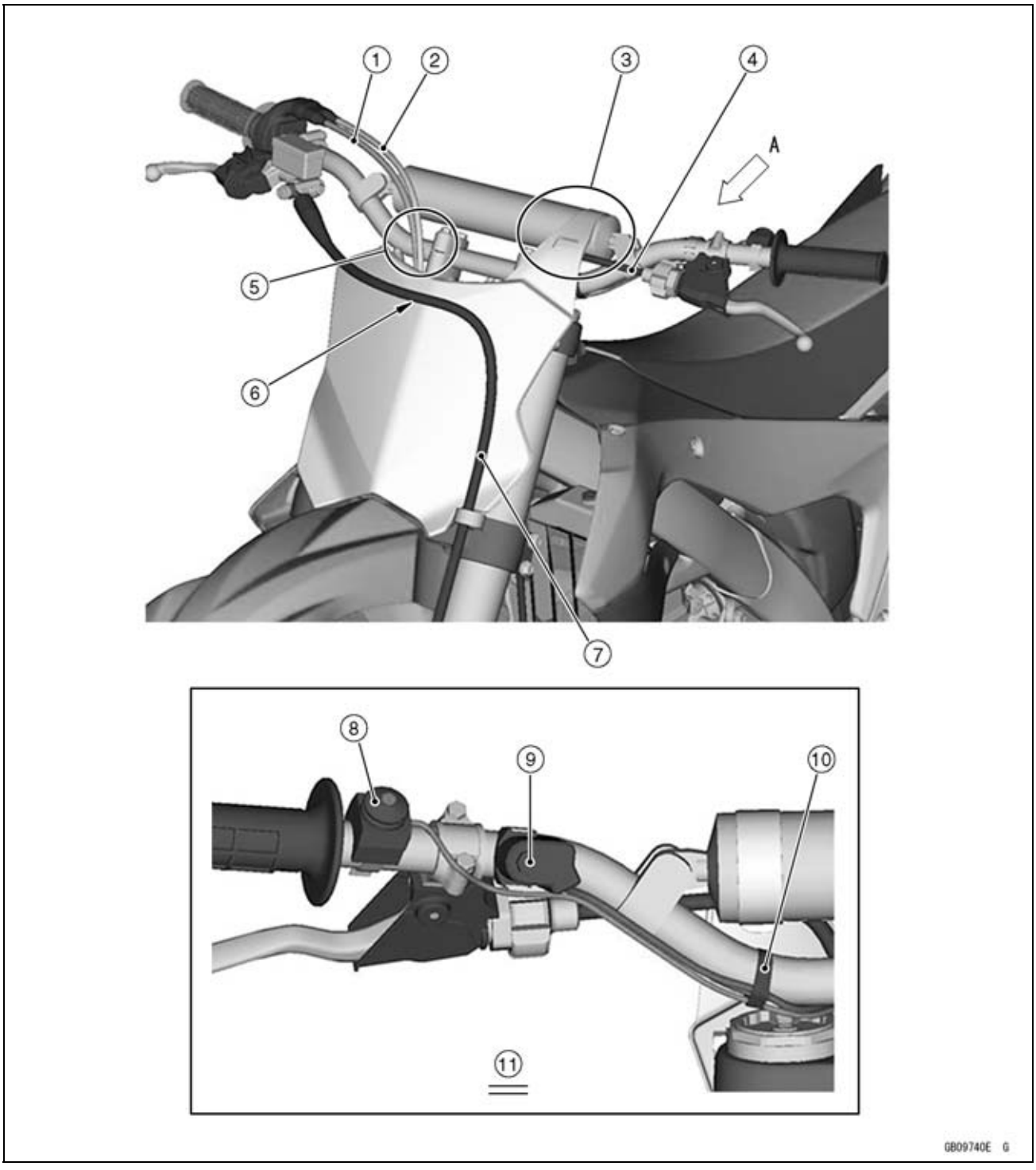

1. Throttle Cable (Decelerator)
2. Throttle Cable (Accelerator)
3. Run the clutch cable to the inside of the number plate.
4. Clutch Cable
5. Run the throttle cables to the inside of the number plate.
6. Run the front brake hose to the outside of the number plate.
7. Front Brake Hose
8. Engine Stop Switch
9. Launch Control Mode Button
10. Band (Hold the engine stop switch lead and launch control mode button lead. Cut the excess of the band into 15 mm (0.59 in.) length or shorter and round off sharp corners.)
11. Viewed from A

Cable, Wire, and Hose Routing

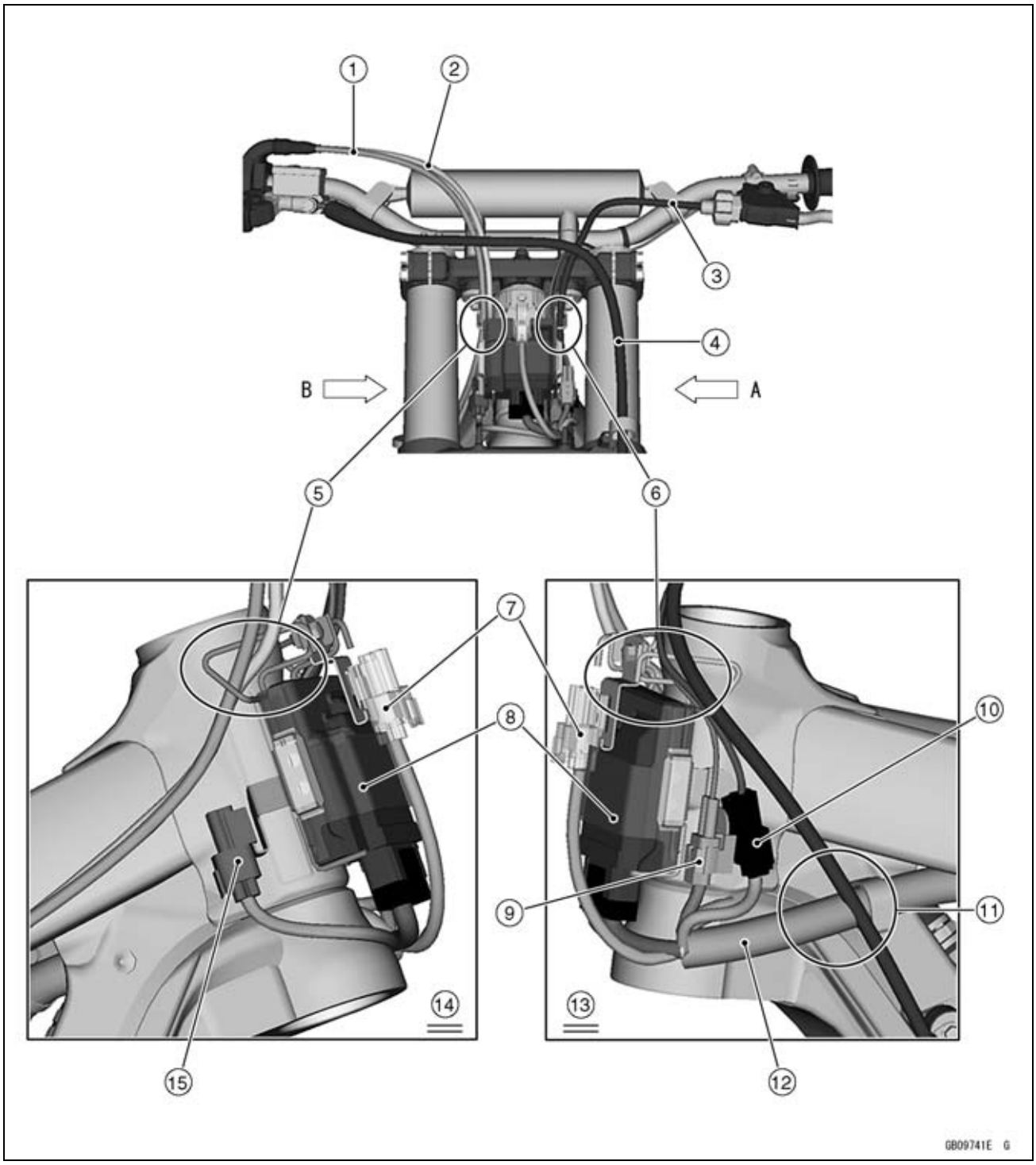

1. Throttle Cable (Decelerator)
2. Throttle Cable (Accelerator)
3. Clutch Cable
4. Front Brake Hose
5. Run the throttle cables into the guide.
6. Run the engine stop switch lead, launch control mode button lead and clutch cable into the guide. Run the clutch cable to the outermost side.
7. Kawasaki Diagnostic System Connector
8. ECU
9. Engine Stop Switch Lead Connector
10. Launch Control Mode Button Lead Connector
11. Run the clutch cable to the outside the main harness.
12. Main Harness
13. Viewed from A
14. Viewed from B
15. DFI Setting Data Selection Connector

Cable, Wire, and Hose Routing

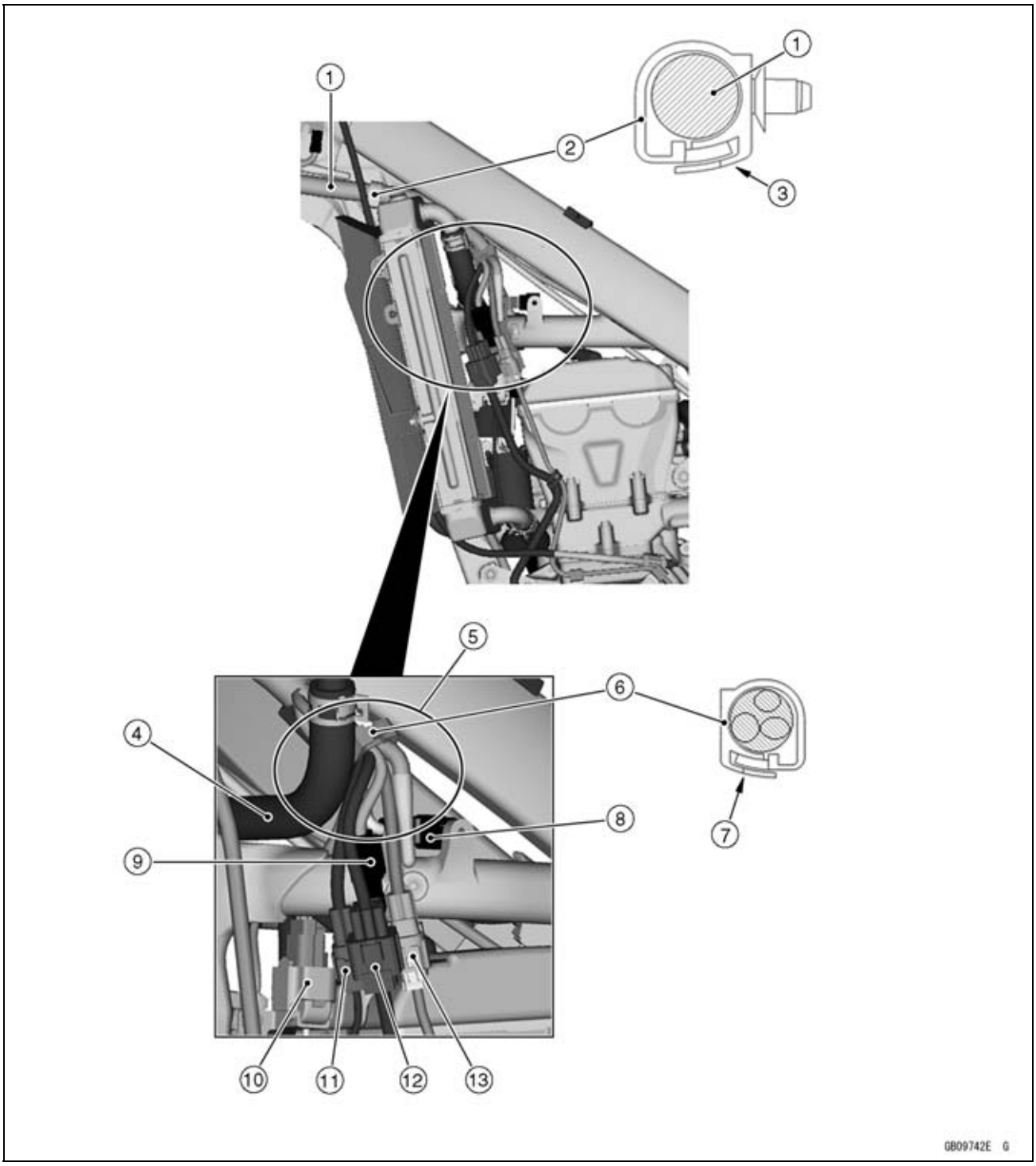

1. Main Harness
2. Clamp (Hold the main harness.)
3. Install the clamp so that its opening faces downward.
4. Water Hose
5. Run the leads to the inside of the water hose.
6. Clamp (Hold the KX FI calibration kit lead, capacitor lead, magneto lead and gear position switch lead.)
7. Install the clamp so that its opening faces to the left side of the frame.
8. Fuel Pump Lead Connector
9. KX FI Calibration Kit Connector (Insert the KX FI calibration kit connector between the magneto lead and gear position switch lead, and the hold the leads with the clamp.)
10. Vehicle-down Sensor
11. Capacitor Lead Connector
12. Magneto Lead Connector
13. Gear Position Switch Lead Connector

Cable, Wire, and Hose Routing

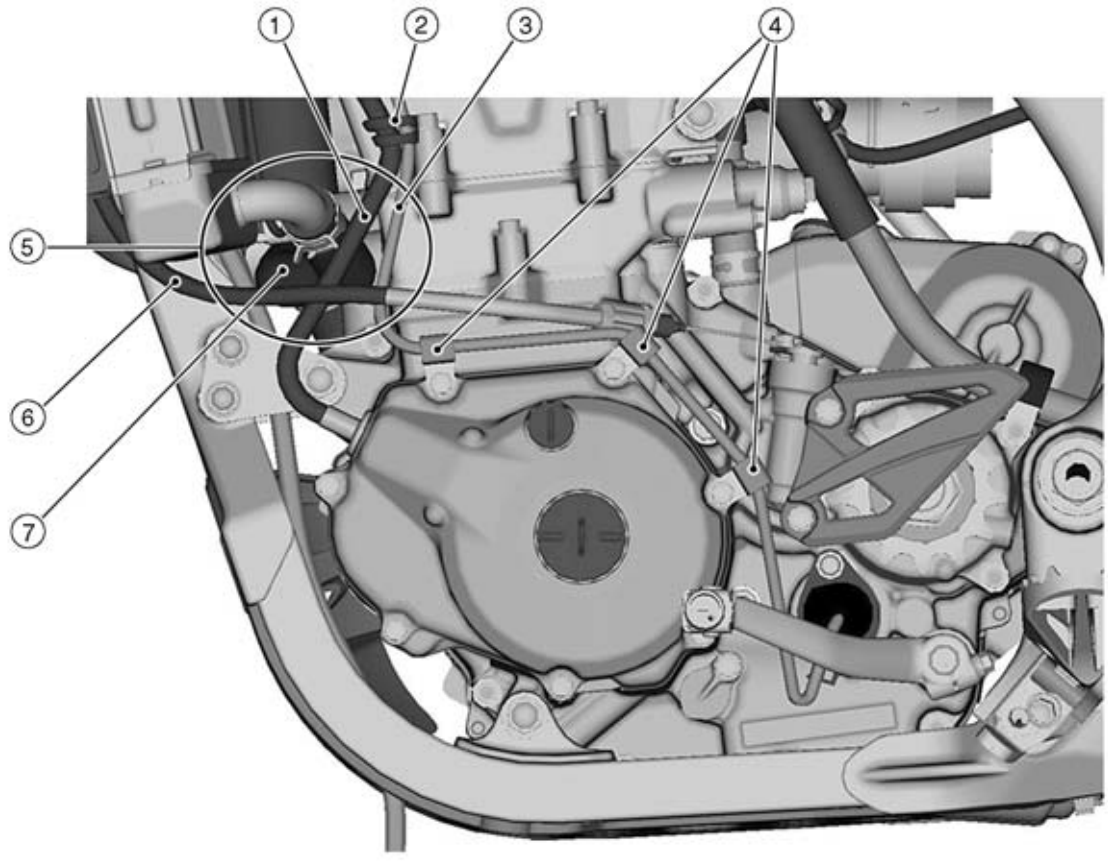

1. Magneto Lead
2. Clamp (Hold the magneto lead and gear position switch lead.)
3. Gear Position Switch Lead
4. Clamps (Hold the gear position switch lead.)
5. Run the magneto lead and gear position switch lead to the rear side of the water hose.
6. Clutch Cable
7. Water Hose

Cable, Wire, and Hose Routing

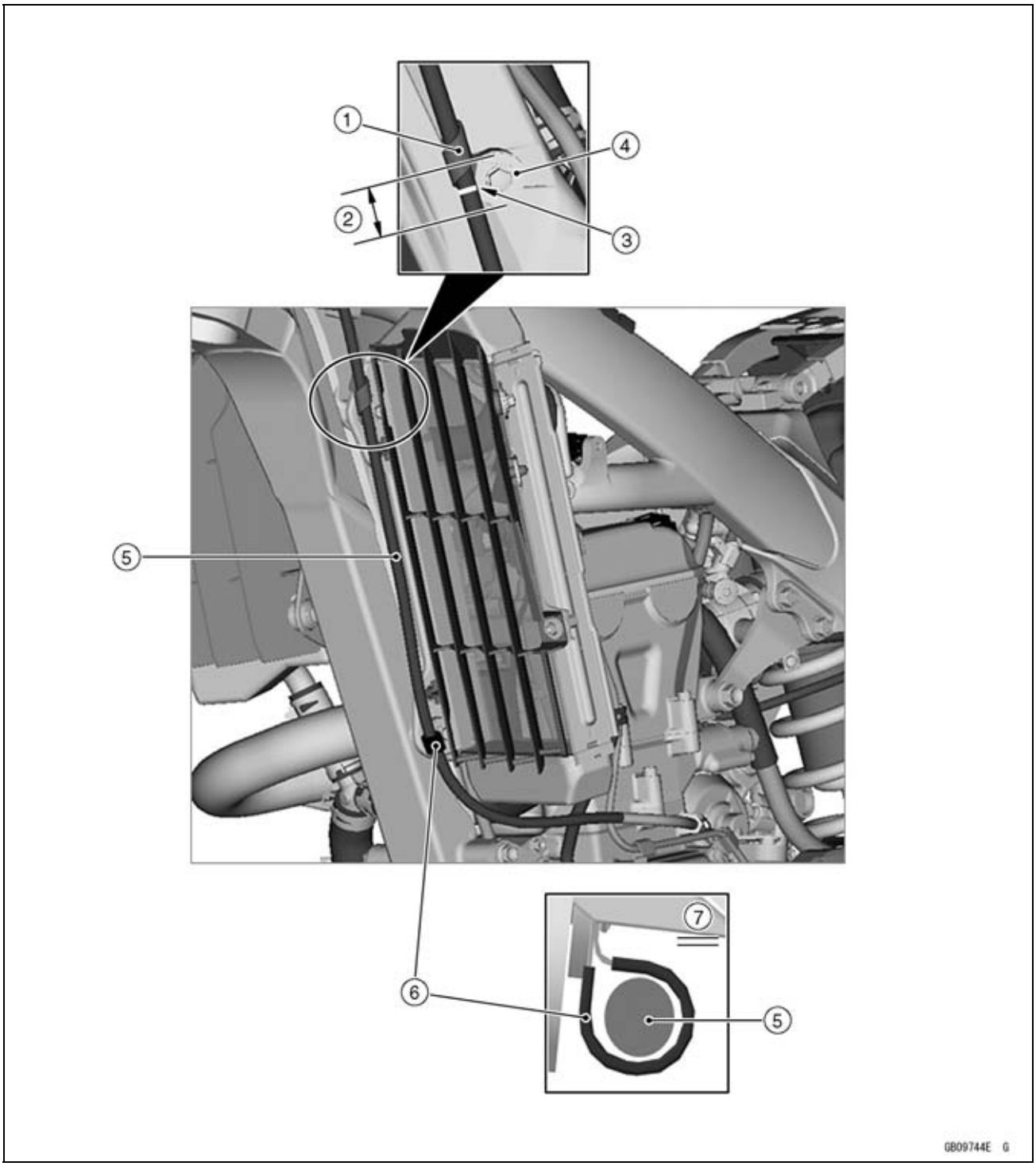

1. Clamp (Hold the clutch cable at the white mark portion. Wind the clamp around the clutch cable upward.)
2. The white mark portion is located within the washer diameter 20 mm (0.79 in.).
3. White Mark
4. Washer
5. Clutch Cable
6. Clamp (Hold the clutch cable.)
7. Viewed from above

Cable, Wire, and Hose Routing

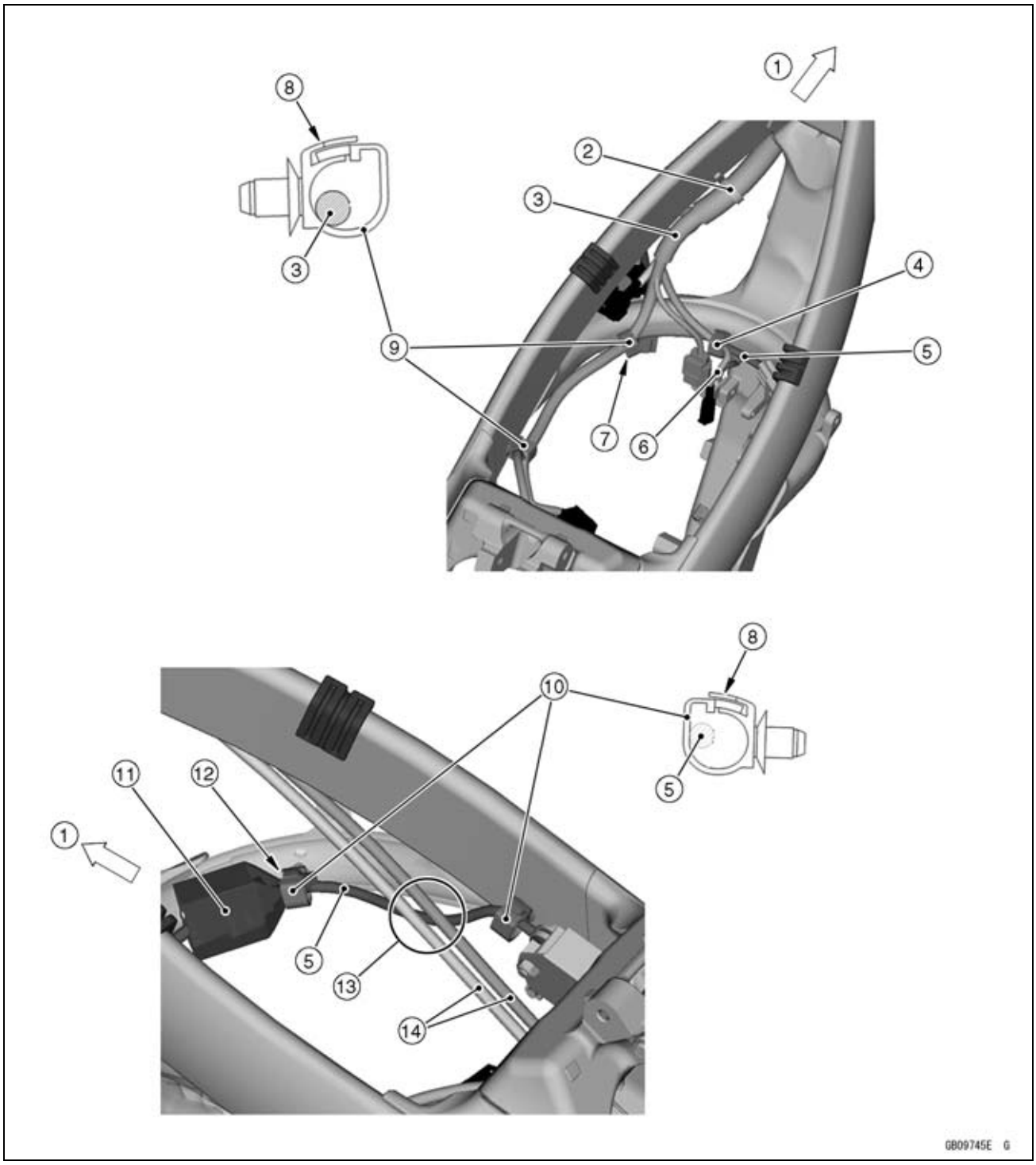

1. Front
2. Clamp (Hold the main harness at the white tape portion of the main harness.)
3. Main Harness
4. Clamp (Hold the lead just before a branched point.)
5. Regulator/Rectifier Lead
6. Ignition Coil Lead
7. Hold the main harness with the clamp at the white tape portion.
8. Install the clamp so that its opening faces upward.
9. Clamps (Hold the main harness)
10. Clamps (Hold the regulator/rectifier lead.)
11. Cover the regulator/rectifier lead connector with the rubber boot.
12. Hold the regulator/rectifier lead with the clamp at the rubber boot end.
13. Run the regulator/rectifier lead under the throttle cables.
14. Throttle Cables

Cable, Wire, and Hose Routing

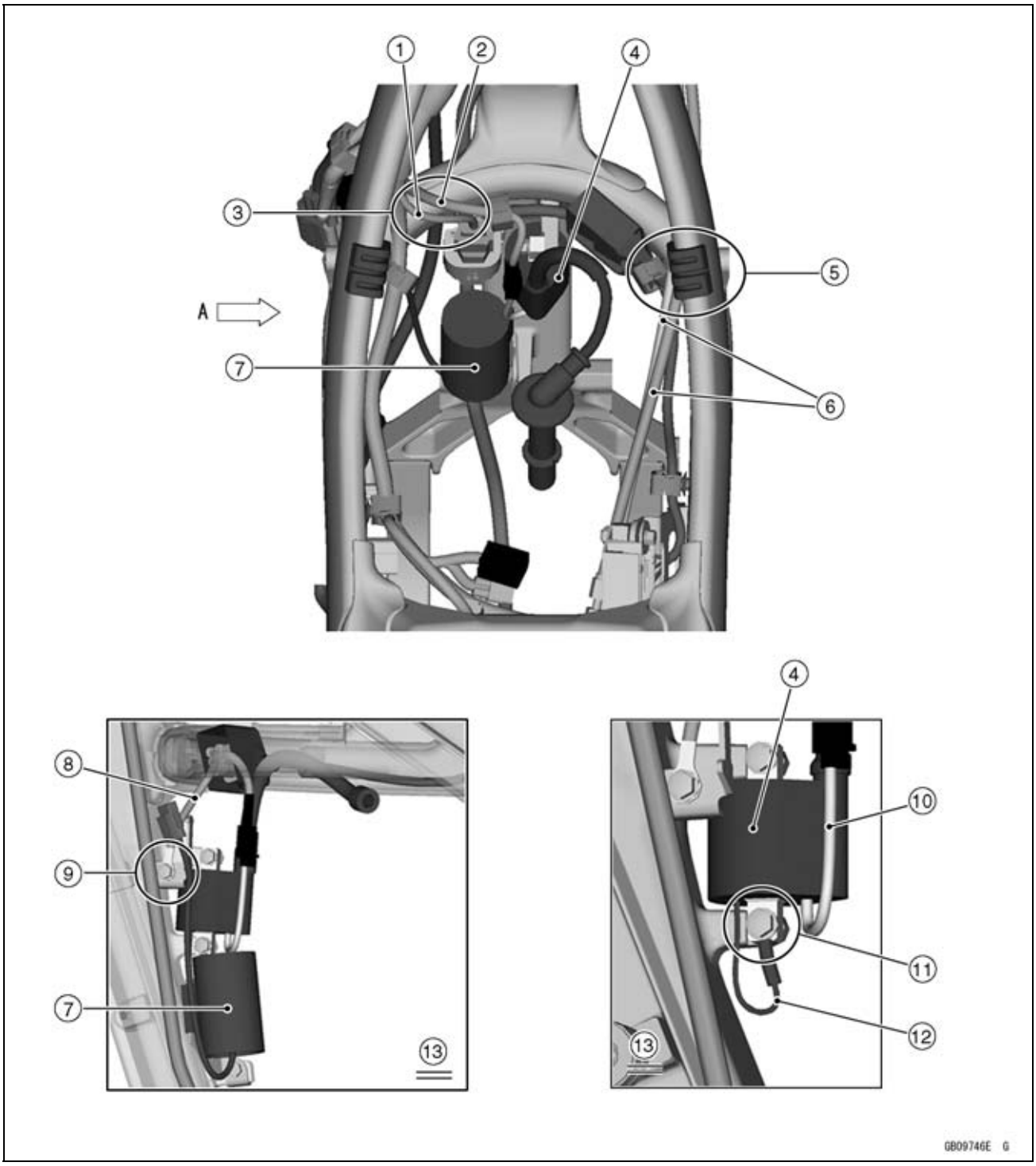

1. Vehicle-down Sensor Lead
2. Main Harness
3. Run the vehicle-down sensor lead and main harness above the frame.
4. Ignition Coil
5. Run the throttle cables between the frames.
6. Throttle Cables
7. Capacitor
8. Frame Ground Lead
9. Install the frame ground terminal together with the vehicle-down sensor bracket so that its caulking portion faces to the outside of the motorcycle.
10. Ignition Coil Lead
11. Install the ignition coil ground lead together with the ignition coil so that its caulking portion faces to the outside of the motorcycle.
12. Ignition Coil Ground Lead
13. Viewed from A

Cable, Wire, and Hose Routing

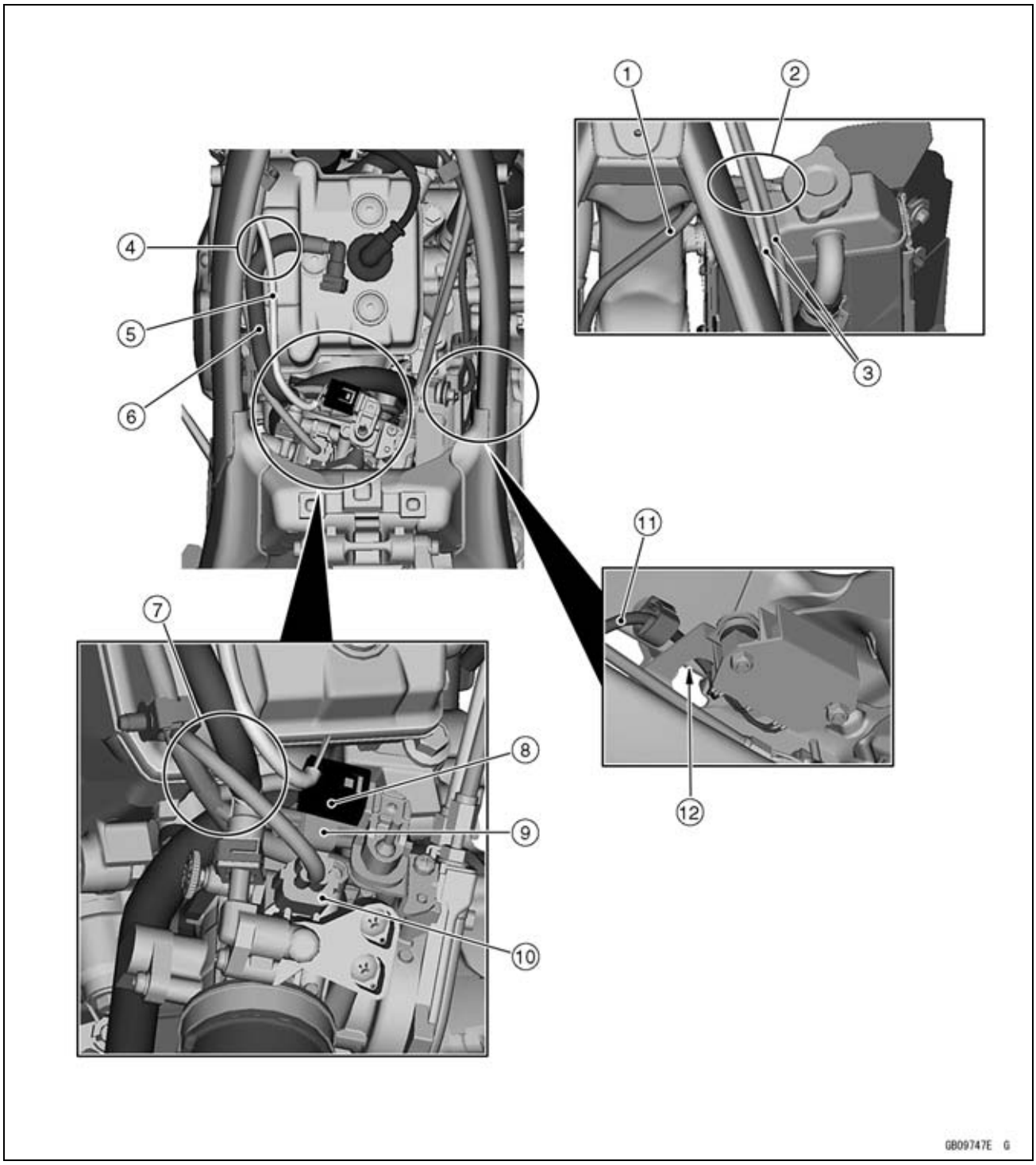

1. Radiator overflow Hose
2. Run the throttle cables above the radiator overflow hose.
3. Throttle Cables
4. Run the fuel pump lead above the fuel hose.
5. Fuel Pump Lead
6. Fuel Hose
7. Run the intake air pressure sensor lead and throttle sensor lead under the fuel hose. Run the fuel injector lead above the fuel hose.
8. Intake Air Pressure Sensor Connector
9. Throttle Sensor Lead Connector
10. Fuel Injector Connector
11. Regulator/Rectifier Lead
12. Run the regulator/rectifier lead between the frame and bracket.

Cable, Wire, and Hose Routing

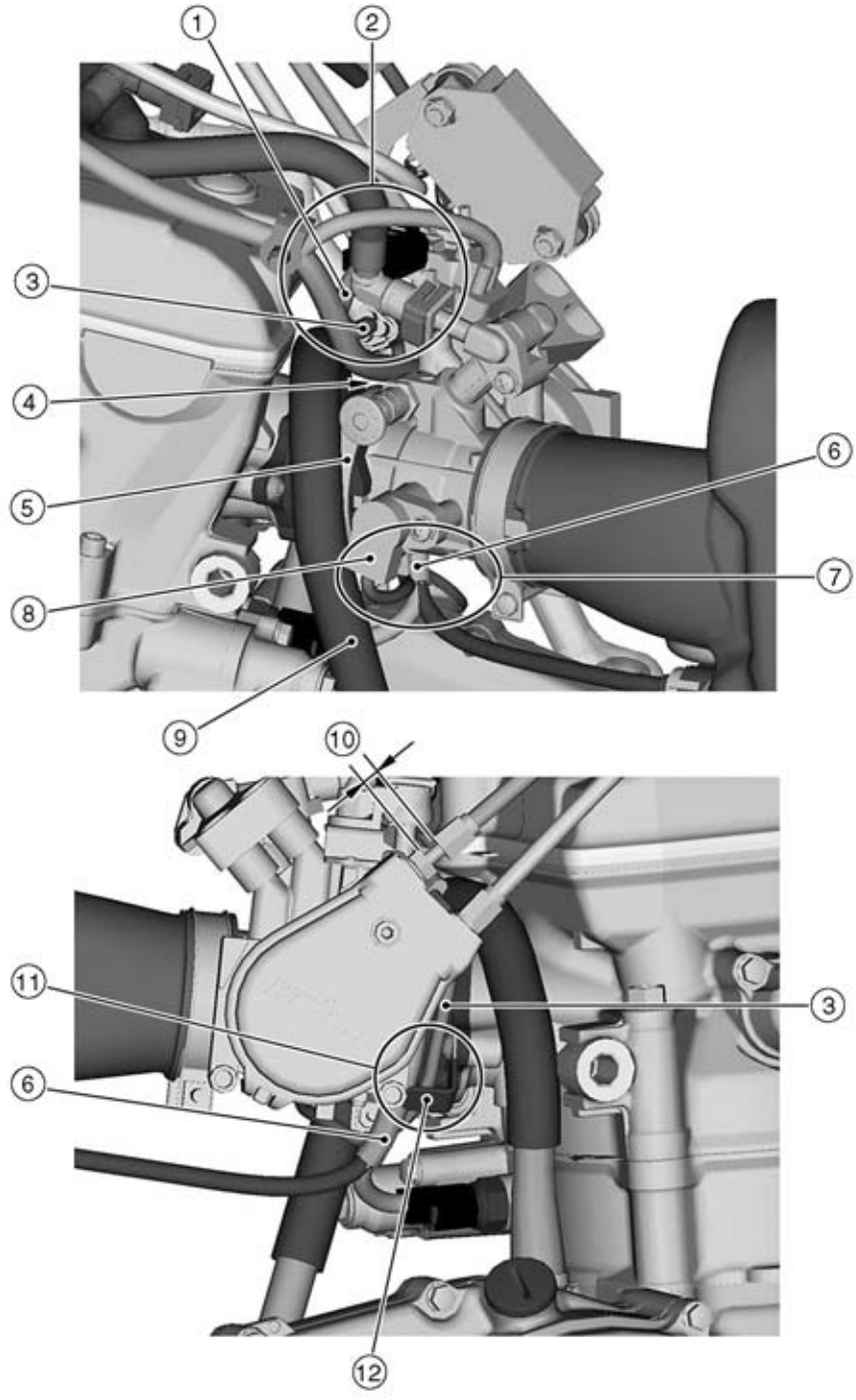

1. Intake Air Pressure Sensor Lead
2. Run the throttle sensor lead under the intake air pressure sensor lead. Run the main harness under the intake air pressure sensor lead.
3. Throttle Sensor Lead
4. Run the main harness under the intake air pressure sensor.
5. Throttle Body Assy Clamp
6. Main Harness (to Intake Air Temperature Sensor and Water Temperature Sensor)
7. Run the throttle sensor lead to the rear side of the throttle body assy clamp and breather hose. Run the throttle sensor lead to the front side of the main harness.
8. Throttle Sensor
9. Breather Hose
10. Mounting Dimension: 2 ±1 mm (0.08 ±0.04 in.)
11. Run the main harness and throttle sensor lead to the right side of the throttle body assy clamp.
12. Clamp (Run the main harness and throttle sensor lead to the inside of the clamp.)

Cable, Wire, and Hose Routing

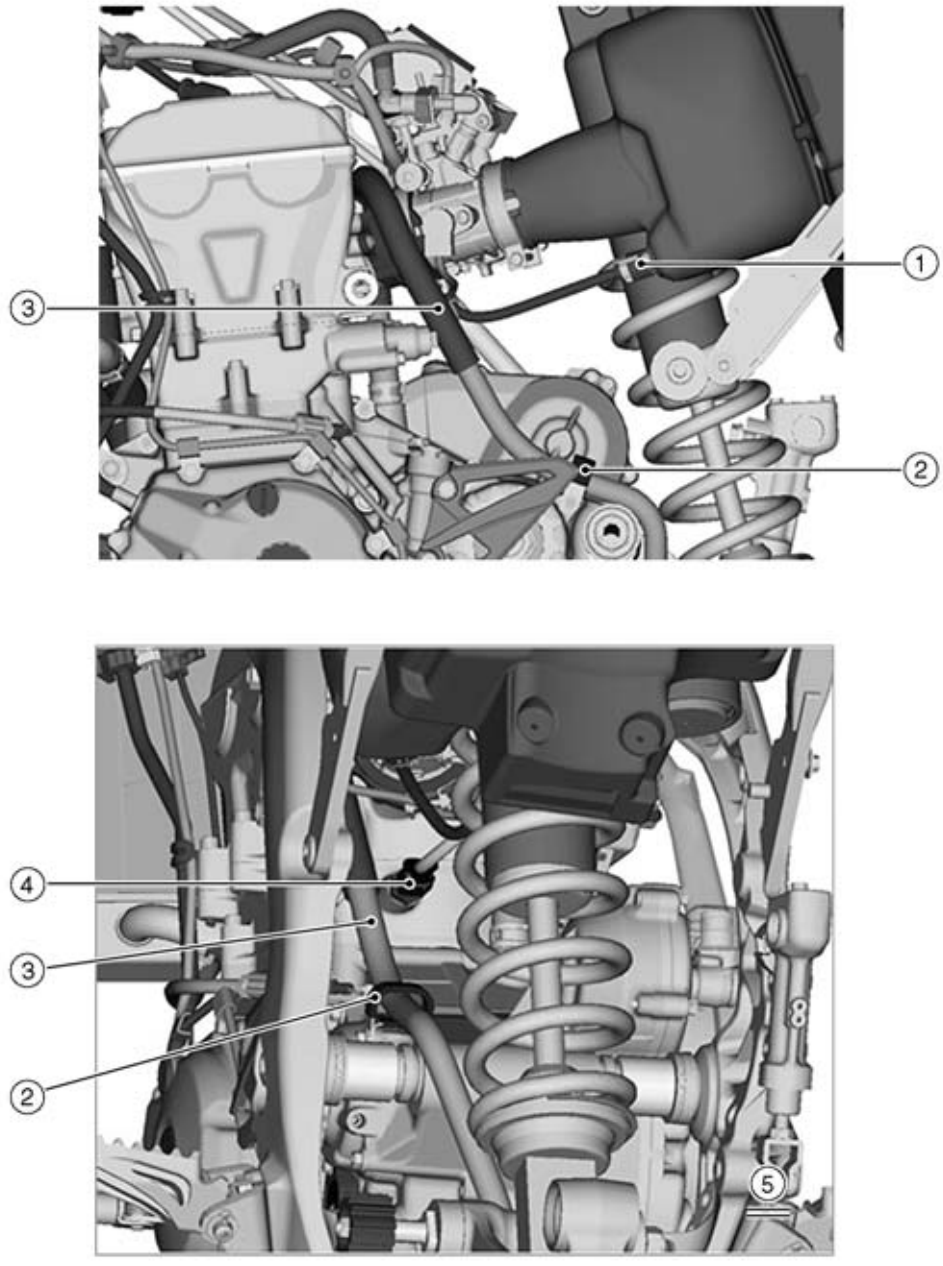

1. Intake Air Temperature Sensor
2. Clamp (Hold the breather hose.)
3. Breather Hose
4. Water Temperature Sensor
5. Viewed from back

Cable, Wire, and Hose Routing

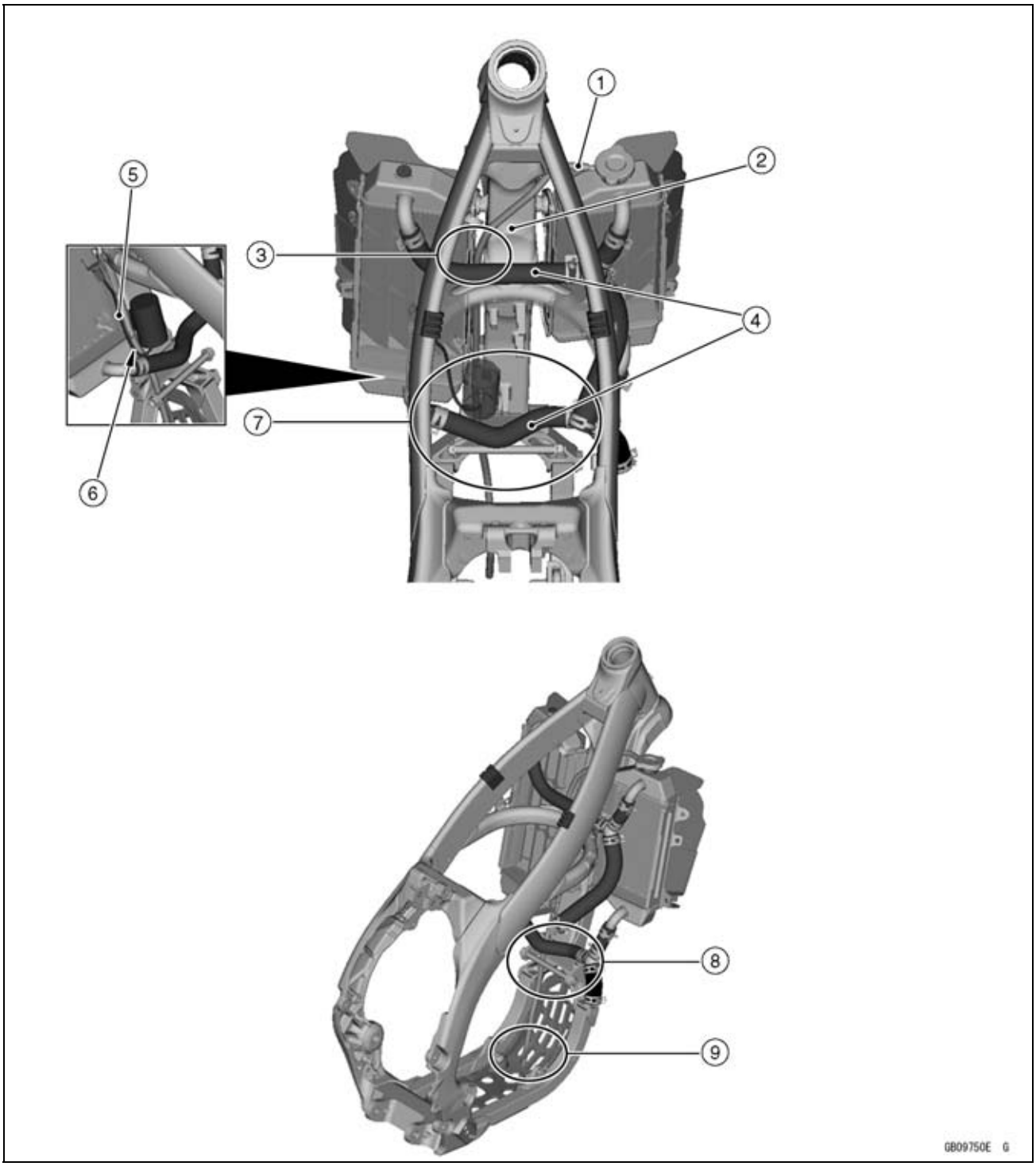

1. Radiator Overflow Hose
2. Frame Downtube
3. Run the radiator overflow hose to the left side of the frame downtube. Run the radiator overflow hose to the front side of the water hose.
4. Water Hoses
5. Capacitor Lead
6. Run the radiator overflow house to the front side of the capacitor lead. Run the radiator over flow house to the left side of the capacitor.
7. Run the radiator overflow hose to the front side of the water hose.
8. Run the radiator overflow hose between the engine brackets.
9. Run the radiator overflow hose into the hole of the lower engine guard as shown.

Install the water hose clamps as shown.

Cable, Wire, and Hose Routing

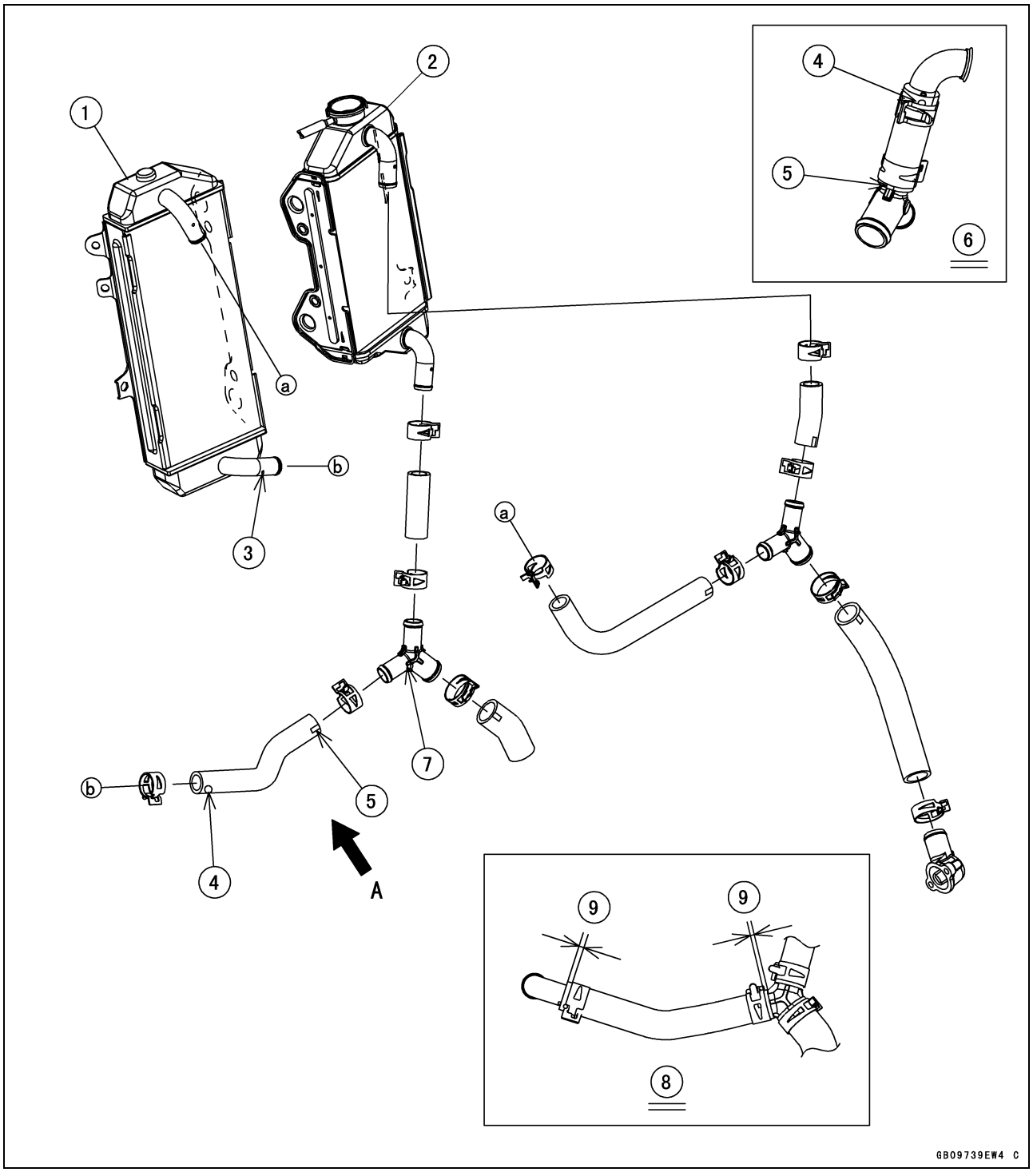

1. Left Radiator
2. Right Radiator
3. Projection
4. White Paint Mark (Align the white paint mark to the projection of the water hose fitting.)
5. White Paint Mark (Align the white paint mark to the stopper rib of the water hose fitting.)
6. Viewed from outside of frame
7. Stopper Rib
8. Viewed from A
9. All Clamp Position: 1 ~ 3 mm (0.04 ~ 0.12 in.).

Install the water hose clamps as shown.

Cable, Wire, and Hose Routing

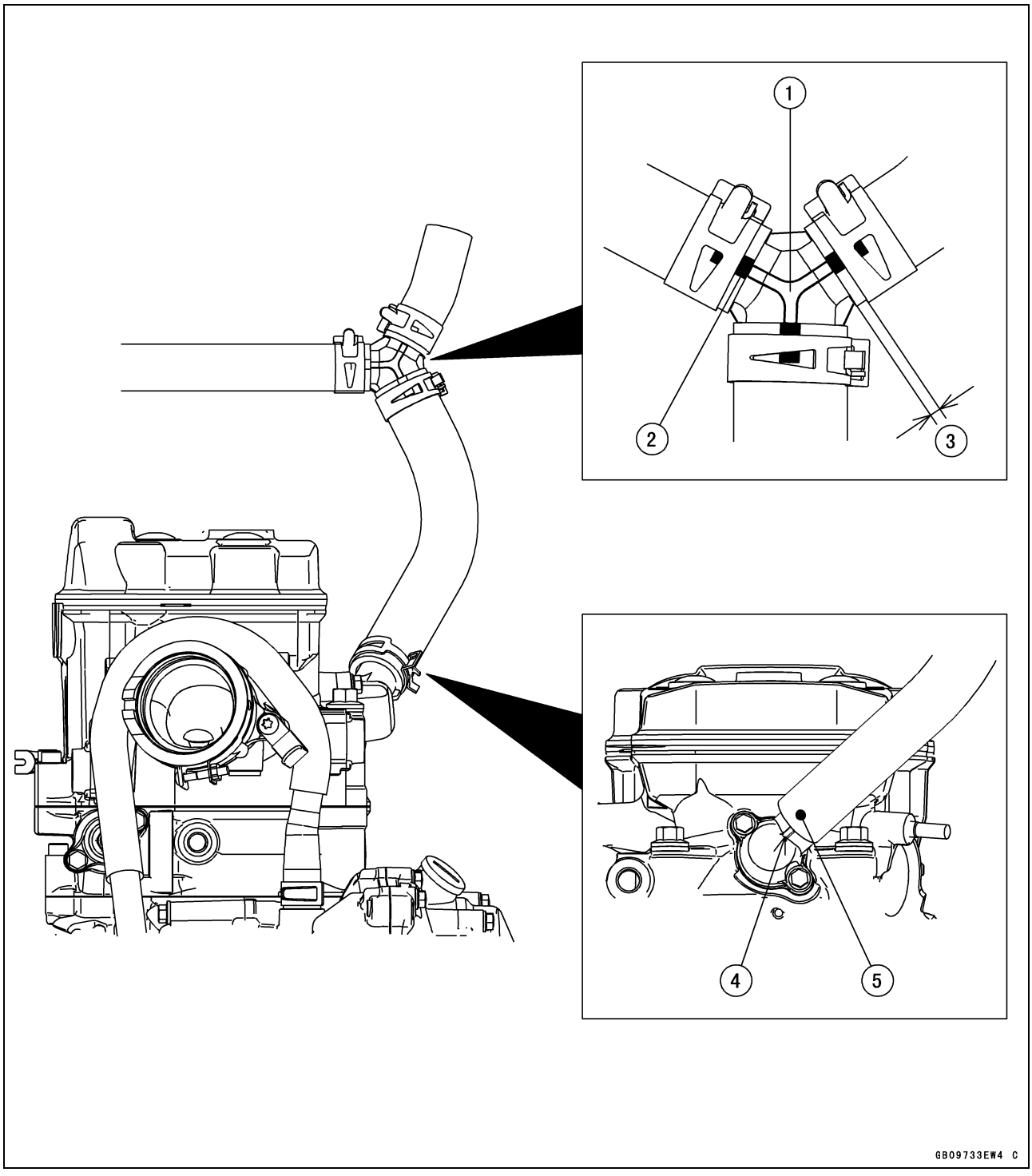

1. Stopper Rib
2. White Paint Mark (Align the white paint mark to the stopper rib of the water hose fitting.)
3. All Clamp Position: 1 ~ 3 mm (0.04 ~ 0.12 in.).
4. Projection
5. White Paint Mark (Align the white paint mark to the projection of the water hose fitting.)

Install the water hose clamps as shown.

Cable, Wire, and Hose Routing

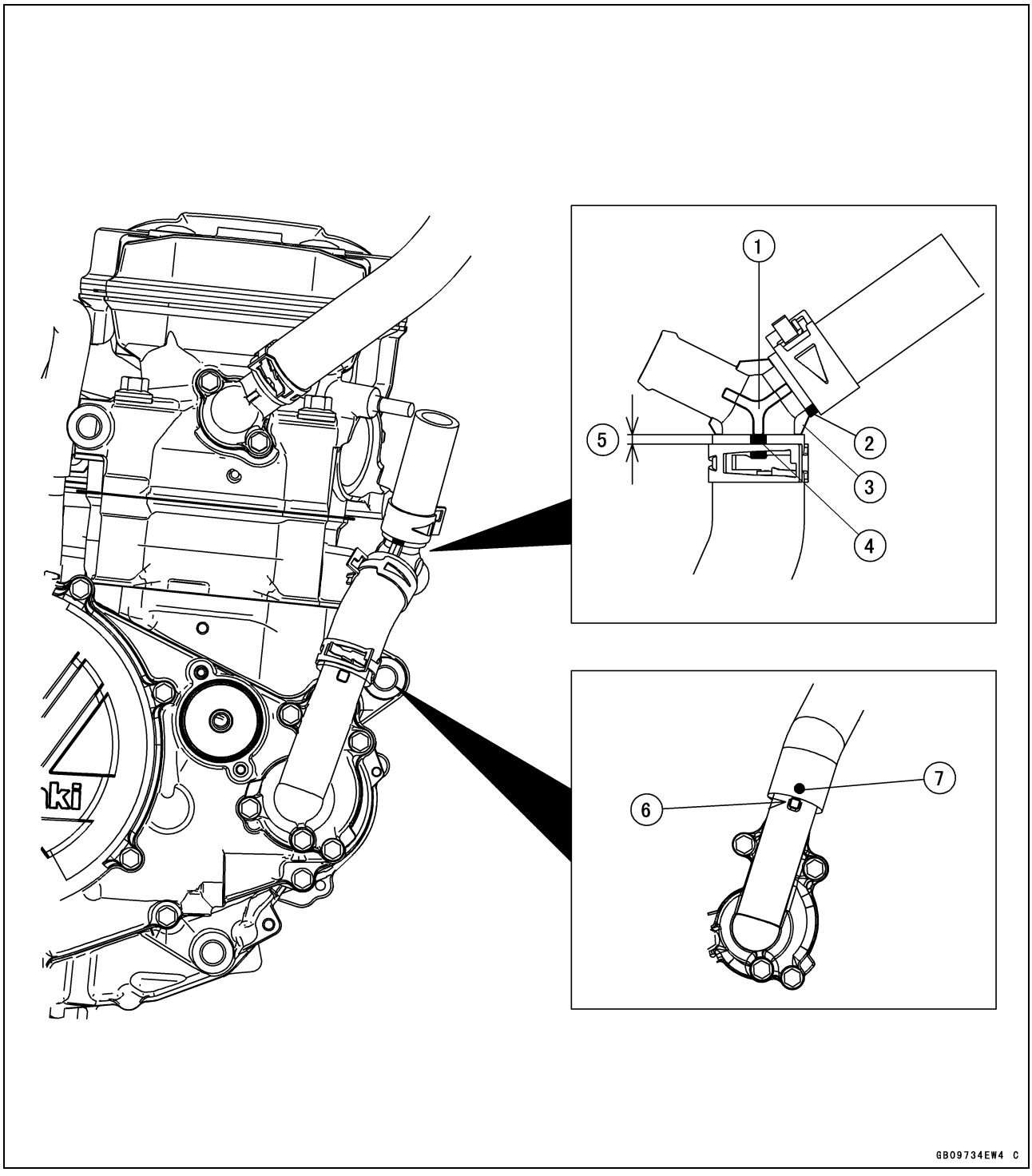

1. Stopper Rib (Center)
2. White Paint Mark (Align the white paint mark to the stopper rib (side) of the water hose fitting.)
3. Stopper Rib (Side)
4. White Paint Mark (Align the white paint mark to the stopper rib (center) of the water hose fitting.)
5. All Clamps Position: 1 ~ 3 mm (0.04 ~ 0.12 in.).
6. Projection
7. White Paint Mark (Align the white paint mark to the projection of the water hose fitting.)

Install the water hose clamps as shown.

Cable, Wire, and Hose Routing

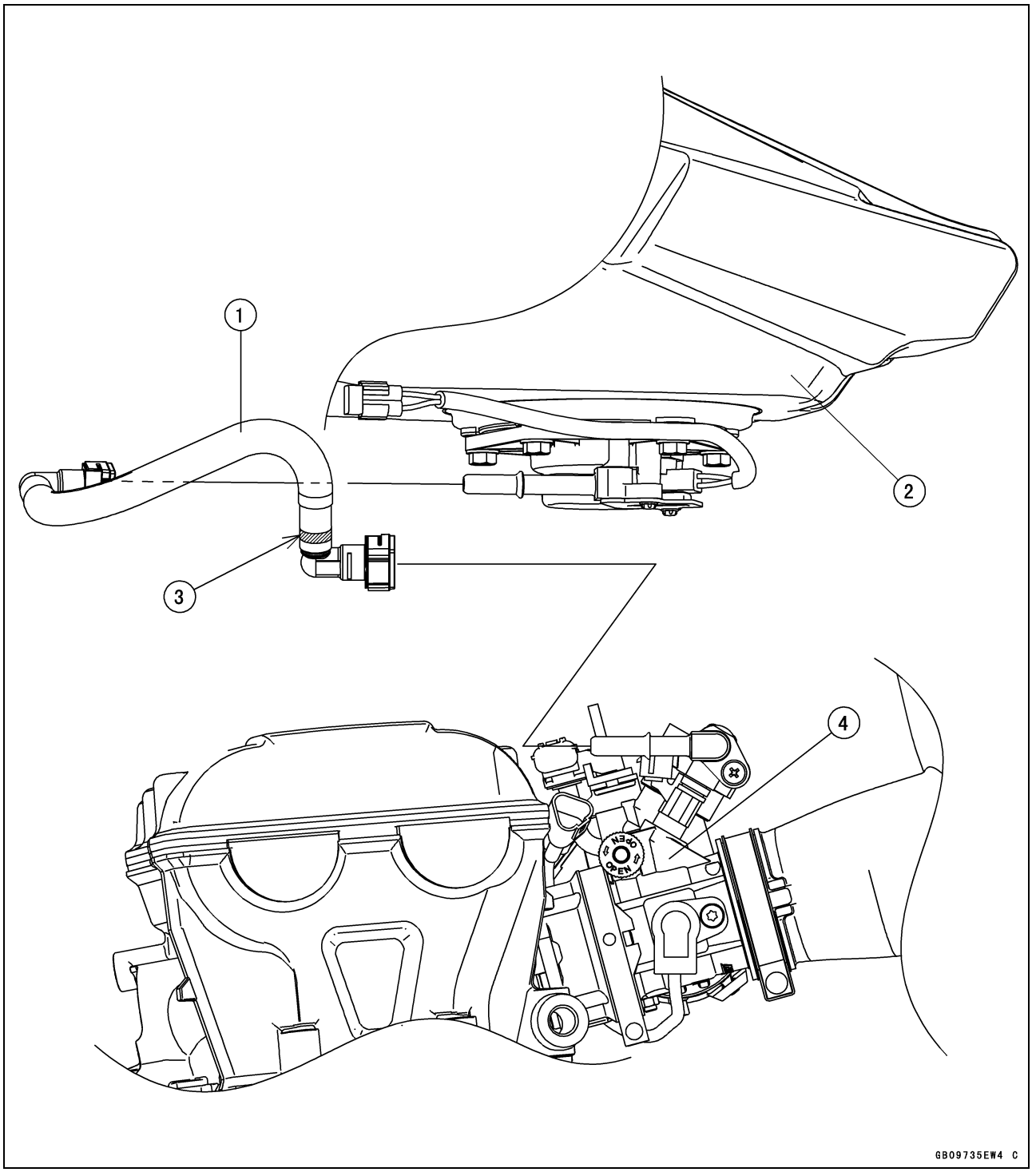

1. Fuel Hose
2. Fuel Tank
3. White Paint Mark (Install the white paint mark side of the fuel hose to the throttle body assy.)
4. Throttle Body Assy

Cable, Wire, and Hose Routing

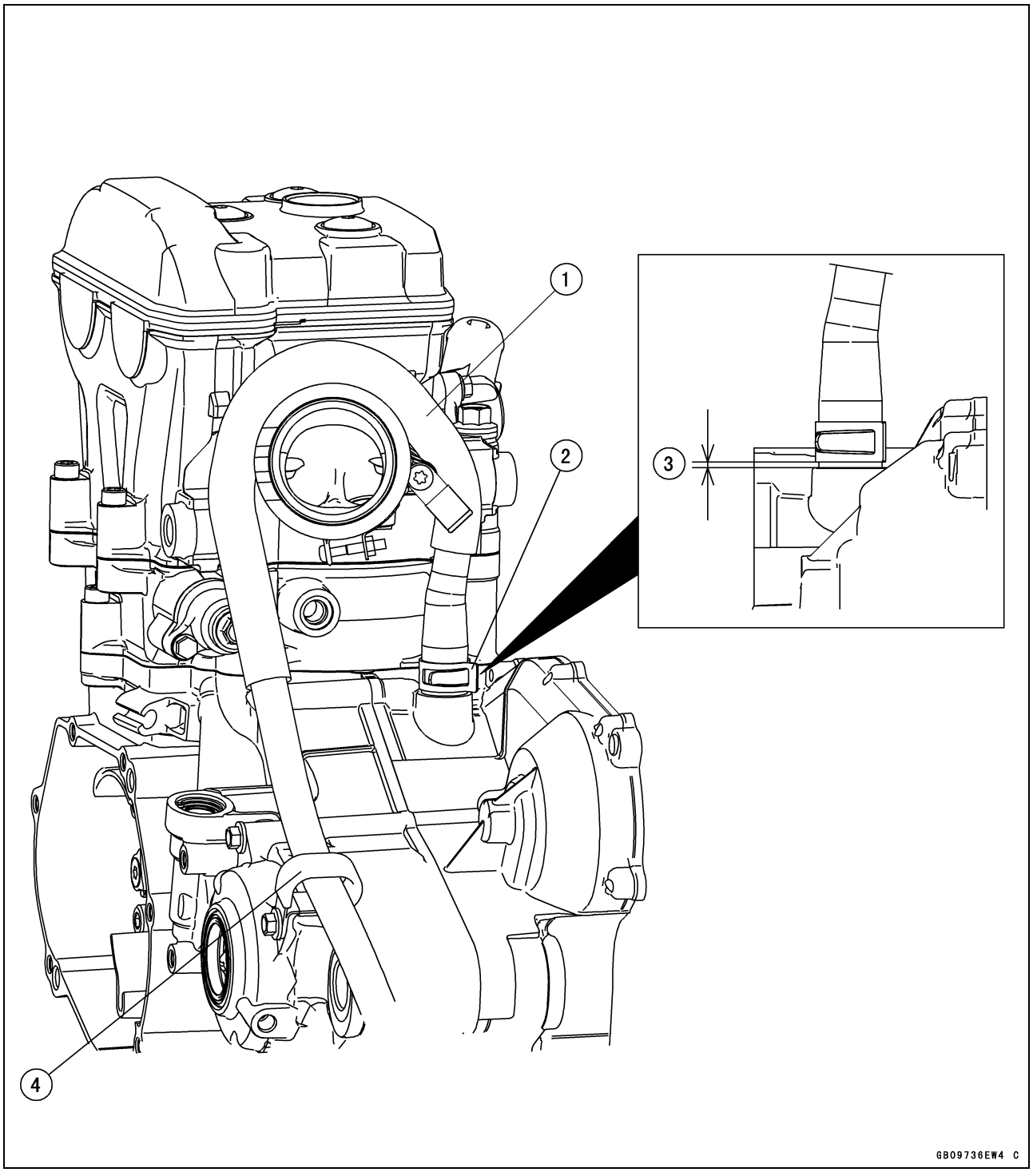

1. Breather Hose
2. Clamp (Hold the breather hose so that clamp faces outward.)
3. Clamps Position: 1 mm (0.04 in.) or less.
4. Clamp (Hold the breather hose.)

Cable, Wire, and Hose Routing

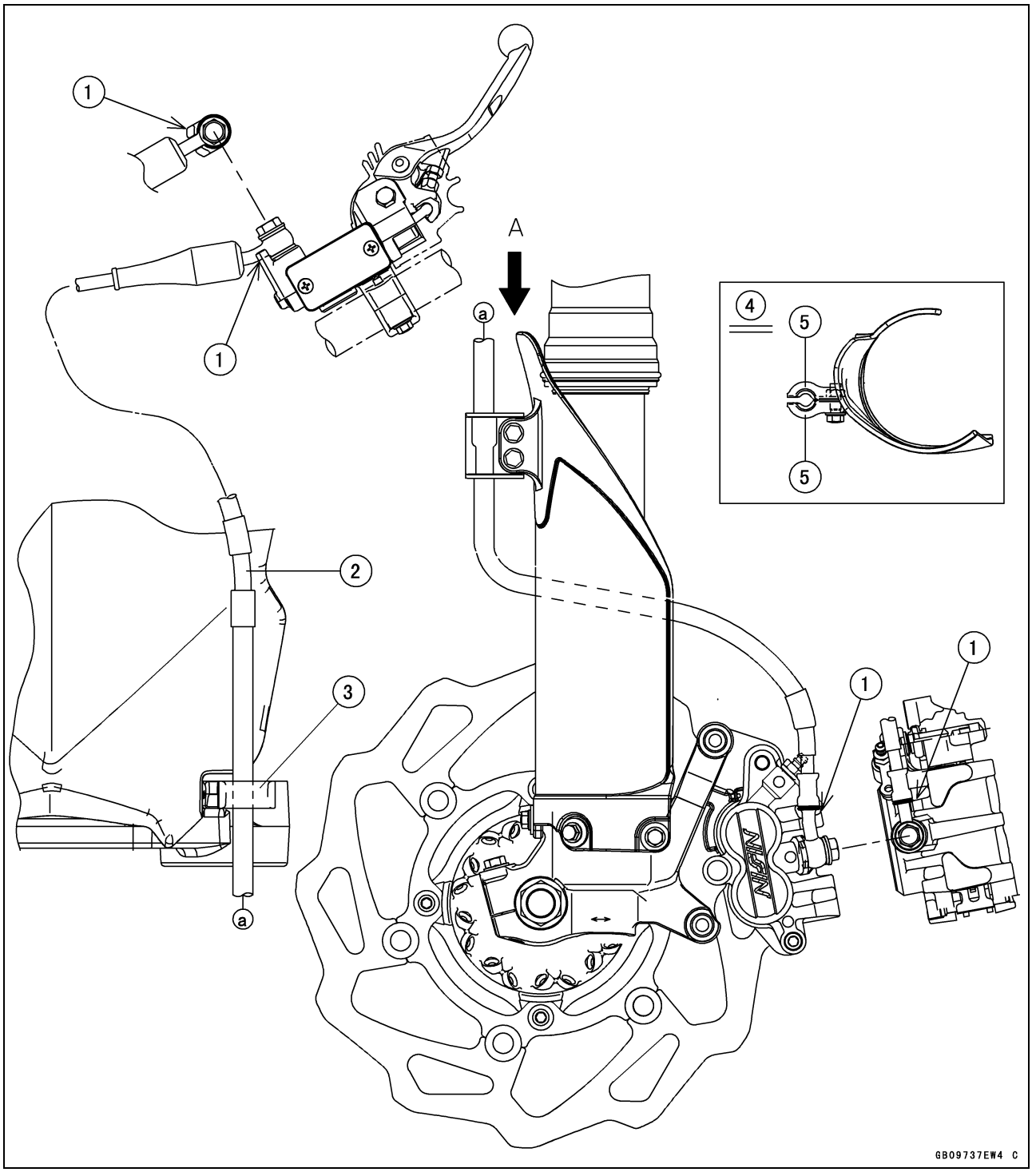

1. Touch the front brake hose fitting to the stopper.
2. Front Brake Hose
3. Clamp (Run the front brake hose into the clamp.)
4. Viewed from A
5. Clamps (Hold the front brake hose.)

Cable, Wire, and Hose Routing

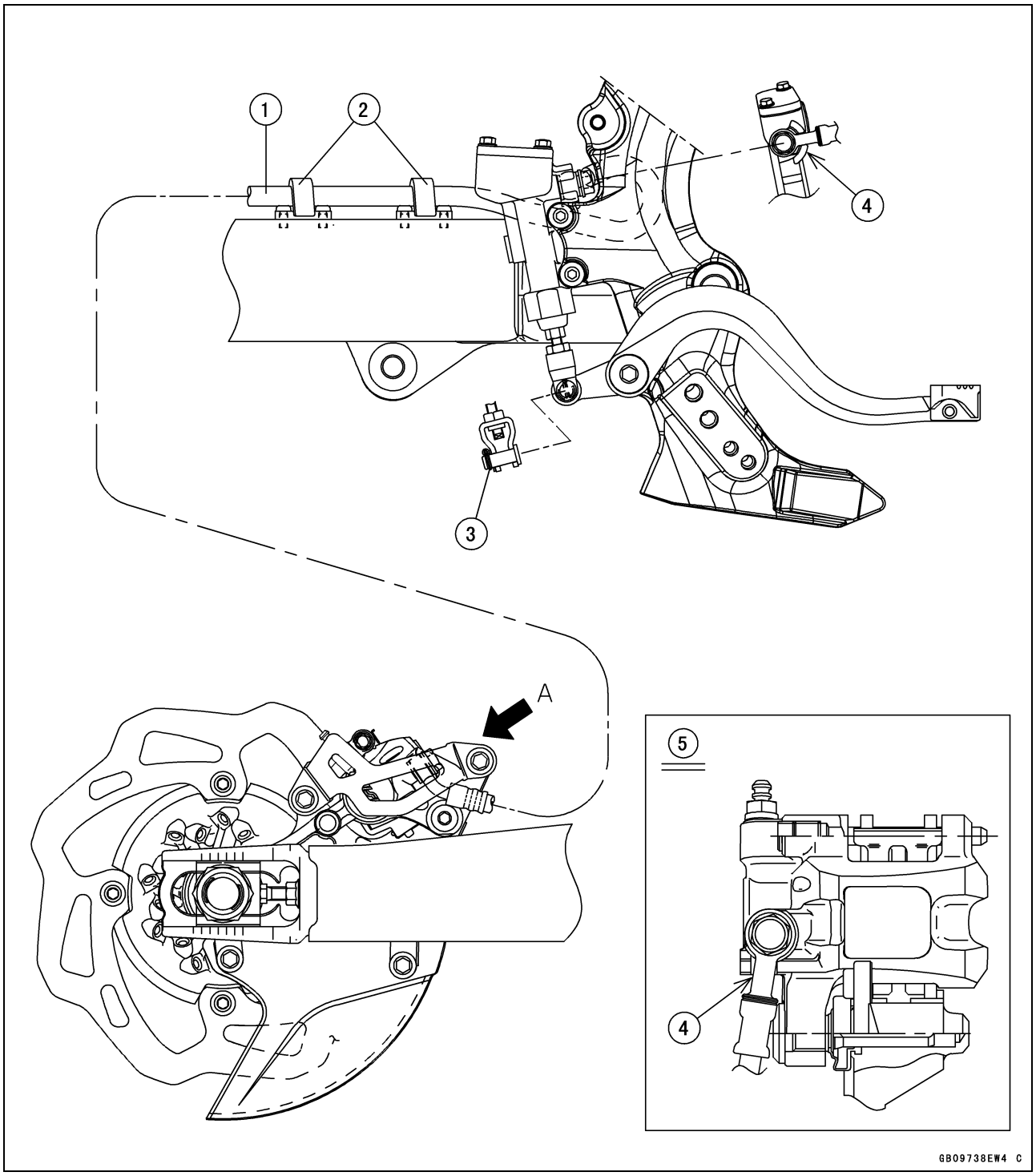

1. Rear Brake Hose
2. Clamps (Hold the rear brake hose.)
3. Cotter Pin
4. Touch the rear brake hose fitting to the stopper.
5. Viewed from A

Troubleshooting Guide

NOTE

○*Refer to the Fuel System (DFI) chapter for most of DFI trouble shooting guide.*

○*This is not an exhaustive list, giving every possible cause for each problem listed. It is meant simply as a rough guide to assist the troubleshooting for some of the more common difficulties.*

Engine Doesn't Start, Starting Difficulty:

Engine won't turn over:
- Valve seizure
- Valve lifter seizure
- Cylinder, piston seizure
- Crankshaft seizure
- Connecting rod small end, big end seizure
- Transmission gear or bearing seizure
- Camshaft seizure
- Kick shaft return spring broken
- Kick ratchet gear not engaging
- Balancer bearing seizure

No fuel flow:
- No fuel in fuel tank
- Fuel tank cap air vent obstructed
- Fuel line clogged
- Fuel filter clogged

Engine flooded:
- Clean spark plug and adjust plug gap
- Starting technique faulty
- (When flooded, do not crank the engine with the throttle fully opened. This promotes engine flood because more fuel is supplied automatically by DFI.)

No spark; spark weak:
- Spark plug dirty, broken, or gap maladjusted
- Spark plug cap or spark plug lead trouble
- Spark plug cap shorted or not in good contact
- Spark plug incorrect heat value
- ECU trouble
- Crankshaft sensor trouble
- Ignition coil trouble
- Engine stop switch shorted
- Wiring shorted or open
- Flywheel damage

Compression Low:
- Spark plug loose
- Cylinder head not sufficiently tightened down
- No valve clearance
- Cylinder, piston worn
- Piston ring bad (worn, weak, broken, or sticking)
- Piston ring/groove clearance excessive
- Cylinder head gasket damaged
- Cylinder head warped
- Valve spring broken or weak
- Valve not seating properly (valve bent, deformed, worn, or carbon accumulation on the seating surface)
- Decompression trouble

Poor Running at Low Speed:

Spark weak:
- Spark plug dirty, broken, or gap maladjusted
- Spark plug cap or spark plug lead trouble
- Spark plug cap shorted or not in good contact
- Spark plug incorrect heat value
- ECU trouble
- Crankshaft sensor trouble
- Flywheel damaged
- Ignition coil trouble
- Wiring connector not in good contact

Fuel/air mixture incorrect:
- Air cleaner clogged, poorly sealed, or missing
- Fuel tank air vent obstructed
- Fuel pump trouble
- Throttle body assy holder loose
- Air cleaner duct loose

Compression low:
- Spark plug loose
- Cylinder head not sufficiently tightened down
- No valve clearance
- Cylinder, piston worn
- Piston ring bad (worn, weak, broken, or sticking)
- Piston ring/groove clearance excessive
- Cylinder head gasket damaged
- Cylinder head warped
- Valve spring broken or weak
- Valve not seating properly (valve bent, deformed, worn, or carbon accumulation on the seating surface)
- Decompression trouble

Other:
- ECU trouble
- Engine oil level to high
- Engine oil viscosity too high
- Brake dragging
- Drive train trouble
- Engine overheating
- Clutch slipping

Poor Running or No Power at High Speed:

Firing incorrect:
- Spark plug dirty, broken, or gap maladjusted

Troubleshooting Guide

Spark plug cap or spark plug lead trouble
Spark plug cap shorted or not in good contact
Spark plug incorrect heat value
ECU trouble
Crankshaft sensor trouble
Flywheel damage
Ignition coil trouble
Wiring connector not in good contact

Fuel/air mixture incorrect:
Air cleaner clogged, poorly sealed, or missing
Air cleaner duct loose
Water or foreign matter in fuel
Throttle body assy holder loose
Fuel to injector insufficient
Fuel tank air vent obstructed
Fuel line clogged
Fuel pump trouble

Compression low:
Spark plug loose
Cylinder head not sufficiently tightened down
No valve clearance
Cylinder, piston worn
Piston ring bad (worn, weak, broken, or sticking)
Piston ring/groove clearance excessive
Cylinder head gasket damaged
Cylinder head warped
Valve spring broken or weak
Valve not seating properly (valve bent, deformed, worn, carbon accumulation on the seating surface.)
Decompression trouble

Knocking:
Carbon built up in combustion chamber
Fuel poor quality or incorrect
Spark plug incorrect heat value
ECU trouble

Other:
Throttle valve won't fully open
Brake dragging
Air cleaner clogged
Water or foreign matter in fuel
Clutch slipping
Overheating
Engine oil level too high
Engine oil viscosity too high
Drive train trouble
Crankshaft bearing worn or damage

Engine Overheating:

Firing incorrect:
Spark plug dirty, broken, or maladjusted
Spark plug incorrect
ECU trouble

Fuel/air mixture incorrect:
Throttle body assy holder loose
Air cleaner duct loose
Air cleaner poorly sealed, or missing
Air cleaner clogged

Compression high:
Carbon built up in combustion chamber

Engine load faulty:
Clutch slipping
Engine oil level too high
Engine oil viscosity too high
Brake dragging
Drive train trouble

Lubrication inadequate:
Engine oil level too low
Engine oil poor quality or incorrect

Coolant incorrect:
Coolant level too low
Coolant deteriorated

Cooling system component incorrect:
Radiator clogged
Radiator cap trouble
Water pump not rotating

Clutch Operation Faulty:

Clutch slipping:
No clutch lever play
Clutch cable maladjusted
Clutch inner cable sticking
Friction plate worn or warped
Steel plate worn or warped
Clutch spring broken or weak
Clutch release function trouble
Clutch hub or housing unevenly worn

Clutch not disengaging properly:
Clutch lever play excessive
Clutch spring compression uneven
Engine oil deteriorated
Engine oil viscosity too high
Engine oil level too high
Clutch housing seized
Clutch release function trouble
Clutch hub nut loose
Clutch plate warped or rough
Clutch hub spline damaged

Gear Shifting Faulty:

Doesn't go into gear; shift pedal doesn't return:
Clutch not disengaging
Shift fork bent, worn, or seized
Shift return spring pin loose
Shift return spring weak or broken
Shift shaft lever broken
Pawl guide plate broken
Shift pawl broken
Shift pawl spring tension lose

Gear seized
Gear positioning lever operation trouble
Shift drum broken

Jumps out of gear:
Shift fork ear worn, bent
Gear groove worn
Gear dogs and/or dog holes worn
Shift drum groove worn
Gear positioning lever spring weak or broken
Shift fork guide pin worn
Drive shaft, output shaft, and/or gear splines worn

Overshifts:
Gear positioning lever spring weak or broken
Pawl guide plate worn

Abnormal Engine Noise:

Knocking:
ECU trouble
Carbon built up in combustion chamber
Fuel poor quality or incorrect
Spark plug incorrect heat value
Overheating

Piston slap:
Cylinder/piston clearance excessive
Cylinder, piston worn
Connecting rod bent
Piston pin, piston pin hole worn

Valve noise:
Valve clearance incorrect
Valve spring broken or weak
Camshaft bearing or cam face worn
Valve lifter worn

Other noise:
Connecting rod big end, small end clearance excessive
Piston ring worn, broken, or stuck
Piston seizure, damage
Cylinder head gasket leaking
Exhaust pipe leaking at cylinder head connection
Crankshaft runout excessive
Engine mounts loose
Crankshaft bearing worn
Camshaft chain tensioner trouble
Camshaft chain, sprocket, chain guide worn
Primary gear worn or damaged
Decompressor spring broken
Magneto flywheel loose

Abnormal Drive Train Noise:

Clutch noise:
Clutch housing finger and friction plate tang worn
Clutch housing gear worn
Metal chips jammed in clutch housing gear teeth

Transmission noise:
Bearings worn
Transmission gears worn or chipped
Metal chips jammed in gear teeth
Engine oil insufficient, low viscosity
Kick ratchet gear not properly disengaging from kick gear
Kick shaft idle gear worn or chipped

Drive chain noise:
Drive chain maladjusted
Drive chain worn
Rear and/or engine sprocket worn
Drive chain lubrication insufficient
Rear wheel misaligned

Abnormal Frame Noise:

Front fork noise:
Oil insufficient or too thin
Front fork air pressure incorrect

Rear shock absorber noise:
Shock absorber trouble
Spring weak or broken

Disc brake noise:
Pad surface glazed
Disc warped
Caliper trouble
Pad installed incorrectly
Master cylinder damaged

Other noise:
Bracket, nut, bolt, etc., not properly mounted or tightened

Abnormal Exhaust Color:

White smoke:
Piston oil ring worn
Cylinder worn
Valve oil seal damaged
Valve guide worn
Engine oil level too high

Black smoke:
Air cleaner element clogged

Brown smoke:
Air cleaner duct loose
Air cleaner clogged
Air cleaner poorly sealed or missing

Handling and/or Stability Unsatisfactory:

Handlebar hard to turn:
Cable, hose, wire routing incorrect
Steering stem nut too tight
Steering stem bearing damaged
Steering stem bearing lubrication inadequate

Troubleshooting Guide

Steering stem bent
Tire air pressure too low

Handlebar shakes or excessively vibrates:
Tire worn
Swingarm pivot bearings worn
Rim warped, or not balanced
Spokes loose
Wheel bearing worn
Handlebar clamp bolt loose
Steering stem head nut loose
Front, rear axle runout excessive

Handlebar pulls to one side:
Frame bent
Rear wheel misalignment
Swingarm bent or twisted
Swingarm pivot shaft bent
Steering maladjusted
Steering stem bent
Front fork bent
Right and left front fork oil level uneven

Suspension operation trouble:
(Too hard)
Tire air pressure too high
Front fork oil excessive
Front fork oil viscosity too high
Rear shock absorber adjustment too hard
Front fork bent
Front fork air pressure too high

(Too soft)
Front fork oil insufficient or leaking
Front fork oil viscosity too low
Rear shock absorber adjusted too soft
Front fork air pressure too low
Rear shock absorber spring weak
Rear shock absorber oil or gas leaking
Tire air pressure too low

Brake Doesn’t Hold:

Air in brake system
Pad, disc worn
Brake fluid leakage
Contaminated pad
Brake fluid deteriorated
Brake master cylinder cups damaged
Master cylinder scratched inside
Disc warped

Part No.99924-1502-01

MODEL APPLICATION

Year	Model	Beginning Frame No.
2016	KX450HG	JKAKXGHC□GA000001 JKAKX450HHA000001

□:This digit in the frame number changes from one machine to another.

Kawasaki Heavy Industries, Ltd. Motorcycle & Engine Company

Printed in Japan