MULE 610 4×4
MULE 600

Utility Vehicle
Service Manual

Kawasaki

Quick Reference Guide

General Information	1
Periodic Maintenance	2
Fuel System	3
Engine Top End	4
Converter System	5
Engine Lubrication System	6
Engine Removal/Installation	7
Engine Bottom End	8
Transmission	9
Wheels/Tires	10
Final Drive	11
Brakes	12
Suspension	13
Steering	14
Frame	15
Electrical System	16
Appendix	17

This quick reference guide will assist you in locating a desired topic or procedure.

- Bend the pages back to match the black tab of the desired chapter number with the black tab on the edge at each table of contents page.
- Refer to the sectional table of contents for the exact pages to locate the specific topic required.

Kawasaki

MULE 610 4×4
MULE 600

Utility Vehicle Service Manual

All rights reserved. No parts of this publication may be reproduced, stored in a retrieval system, or transmitted in any form or by any means, electronic mechanical photocopying, recording or otherwise, without the prior written permission of Quality Assurance Division/Motorcycle & Engine Company/Kawasaki Heavy Industries, Ltd., Japan.

No liability can be accepted for any inaccuracies or omissions in this publication, although every possible care has been taken to make it as complete and accurate as possible.

The right is reserved to make changes at any time without prior notice and without incurring an obligation to make such changes to products manufactured previously. See your dealer for the latest information on product improvements incorporated after this publication.

All information contained in this publication is based on the latest product information available at the time of publication. Illustrations and photographs in this publication are intended for reference use only and may not depict actual model component parts.

© 2004 Kawasaki Heavy Industries, Ltd.

13th Edition (0) : Mar. 20, 2014

LIST OF ABBREVIATIONS

A	ampere(s)	lb	pounds(s)
ABDC	after bottom dead center	m	meter(s)
AC	alternating current	min	minute(s)
ATDC	after top dead center	N	newton(s)
BBDC	before bottom dead center	Pa	pascal(s)
BDC	bottom dead center	PS	horsepower
BTDC	before top dead center	psi	pound(s) per square inch
°C	degree(s) Celsius	r	revolution
DC	direct current	rpm	revolution(s) per minute
F	farad(s)	TDC	top dead center
°F	degree(s) Fahrenheit	TIR	total indicator reading
ft	foot, feet	V	volt(s)
g	gram(s)	W	watt(s)
h	hour(s)	Ω	ohm(s)
L	liter(s)		

COUNTRY AND AREA CODES

AU	Australia	EUR	Europe
CA	Canada	US	United States
CAL	California		

EMISSION CONTROL INFORMATION

To protect the environment in which we all live, Kawasaki has incorporated crankcase emission (1), exhaust emission (2), and evaporative emission (3) control systems in compliance with applicable regulations of the United States Environmental Protection Agency and California Air Resources Board.

1. Crankcase Emission Control System

A sealed-type crankcase emission control system is used to eliminate blow-by gases. The blow-by gases are led to the breather chamber through the crankcase. Then, it is led to the intake manifold.

Oil is separated from the gases while passing through the inside of the breather chamber from the crankcase, and then returned to the bottom of the crankcase.

2. Exhaust Emission Control System

The exhaust emission control system applied to this engine family is engine modifications that consist of a catalytic converter in the muffler (CAL model), a modified carburetor and ignition system having optimum ignition timing characteristics. The carburetor has been calibrated to provide lean air/fuel mixture characteristics and optimum fuel economy with a suitable air cleaner and exhaust system.

A maintenance free ignition system provides the most favorable ignition timing and helps maintain a thorough combustion process within the engine which contributes to a reduction of exhaust pollutants entering the atmosphere.

3-1. Evaporative Emission Control System (EUR model)

The evaporative emission control system for this utility vehicle consists of low permeation fuel hoses.

3-2. Evaporative Emission Control System (US and CA models)

The evaporative emission control system for this utility vehicle consists of low permeation fuel hoses and fuel tank.

Also, vapors caused by fuel evaporation in the fuel system are not vented into the atmosphere. Instead, fuel vapors are routed into the running engine to be burned, or stored in a canister when the engine is stopped.

The Clean Air Act, which is the Federal law covering motor vehicle pollution, contains what is commonly referred to as the Act's "tampering provisions."

"Sec. 203(a) The following acts and the causing thereof are prohibited...

(3)(A) for any person to remove or render inoperative any device or element of design installed on or in a motor vehicle or motor vehicle engine in compliance with regulations under this title prior to its sale and delivery to the ultimate purchaser, or for any manufacturer or dealer knowingly to remove or render inoperative any such device or element of design after such sale and delivery to the ultimate purchaser.

(3)(B) for any person engaged in the business of repairing, servicing, selling, leasing, or trading motor vehicles or motor vehicle engines, or who operates a fleet of motor vehicles knowingly to remove or render inoperative any device or element of design installed on or in a motor vehicle or motor vehicle engine in compliance with regulations under this title following its sale and delivery to the ultimate purchaser..."

NOTE

○ *The phrase "remove or render inoperative any device or element of design" has been generally interpreted as follows:*

1. *Tampering does not include the temporary removal or rendering inoperative of devices or elements of design in order to perform maintenance.*
2. *Tampering could include:*
   - a. *Maladjustment of vehicle components such that the emission standards are exceeded.*
   - b. *Use of replacement parts or accessories which adversely affect the performance or durability of the vehicle.*
   - c. *Addition of components or accessories that result in the vehicle exceeding the standards.*

d.Permanently removing, disconnecting, or rendering inoperative any component or element of design of the emission control systems.

WE RECOMMEND THAT ALL DEALERS OBSERVE THESE PROVISIONS OF FEDERAL LAW, THE VIOLATION OF WHICH IS PUNISHABLE BY CIVIL PENALTIES NOT EXCEEDING $10,000 PER VIOLATION.

PLEASE DO NOT TAMPER WITH NOISE CONTROL SYSTEM (US Model only)

To minimize the noise emissions from this product, Kawasaki has equipped it with effective intake and exhaust silencing systems. They are designed to give optimum performance while maintaining a low noise level. Please do not remove these systems, or alter them in any way which results in an increase in noise level.

Foreword

This manual is designed primarily for use by trained mechanics in a properly equipped shop. However, it contains enough detail and basic information to make it useful to the owner who desires to perform his own basic maintenance and repair work. A basic knowledge of mechanics, the proper use of tools, and workshop procedures must be understood in order to carry out maintenance and repair satisfactorily. Whenever the owner has insufficient experience or doubts his ability to do the work, all adjustments, maintenance, and repair should be carried out only by qualified mechanics.

In order to perform the work efficiently and to avoid costly mistakes, read the text, thoroughly familiarize yourself with the procedures before starting work, and then do the work carefully in a clean area. Whenever special tools or equipment are specified, do not use makeshift tools or equipment. Precision measurements can only be made if the proper instruments are used, and the use of substitute tools may adversely affect safe operation.

For the duration of the warranty period, we recommend that all repairs and scheduled maintenance be performed in accordance with this service manual. Any owner maintenance or repair procedure not performed in accordance with this manual may void the warranty.

To get the longest life out of your vehicle:

- Follow the Periodic Maintenance Chart in the Service Manual.
- Be alert for problems and non-scheduled maintenance.
- Use proper tools and genuine Kawasaki vehicle parts. Special tools, gauges, and testers that are necessary when servicing Kawasaki vehicles are introduced by the Service Manual. Genuine parts provided as spare parts are listed in the Parts Catalog.
- Follow the procedures in this manual carefully. Don't take shortcuts.
- Remember to keep complete records of maintenance and repair with dates and any new parts installed.

How to Use This Manual

In this manual, the product is divided into its major systems and these systems make up the manual's chapters. The Quick Reference Guide shows you all of the product's system and assists in locating their chapters. Each chapter in turn has its own comprehensive Table of Contents.

For example, if you want ignition coil information, use the Quick Reference Guide to locate the Electrical System chapter. Then, use the Table of Contents on the first page of the chapter to find the Ignition Coil section.

Whenever you see symbols, heed their instructions! Always follow safe operating and maintenance practices.

⚠ DANGER

DANGER indicates a hazardous situation which, if not avoided, will result in death or serious injury.

⚠ WARNING

WARNING indicates a hazardous situation which, if not avoided, could result in death or serious injury.

NOTICE

NOTICE is used to address practices not related to personal injury.

This manual contains four more symbols which will help you distinguish different types of information.

NOTE

○*NOTE indicates information that may help or guide you in the operation or service of the vehicle.*

- Indicates a procedural step or work to be done.

○Indicates a procedural sub-step or how to do the work of the procedural step it follows. It also precedes the text of a NOTE.

★Indicates a conditional step or what action to take based on the results of the test or inspection in the procedural step or sub-step it follows.

In most chapters an exploded view illustration of the system components follows the Table of Contents. In these illustrations you will find the instructions indicating which parts require specified tightening torque, oil, grease or a locking agent during assembly.

General Information

Table of Contents

Before Servicing 1-2
Model Identification..... 1-7
Model Identification..... 1-8
General Specifications..... 1-9
Unit Conversion Table 1-16

Before Servicing

Before starting to perform an inspection service or carry out a disassembly and reassembly operation on a vehicle, read the precautions given below. To facilitate actual operations, notes, illustrations, photographs, cautions, and detailed descriptions have been included in each chapter wherever necessary. This section explains the items that require particular attention during the removal and reinstallation or disassembly and reassembly of general parts.

Especially note the following:

Battery Ground

Before completing any service on the vehicle, disconnect the battery cables from the battery to prevent the engine from accidentally turning over. Disconnect the ground cable (–) first and then the positive (+). When completed with the service, first connect the positive (+) cable to the positive (+) terminal of the battery then the negative (–) cable to the negative terminal.

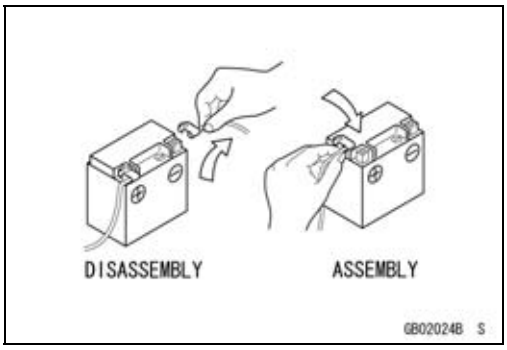

Edges of Parts

Lift large or heavy parts wearing gloves to prevent injury from possible sharp edges on the parts.

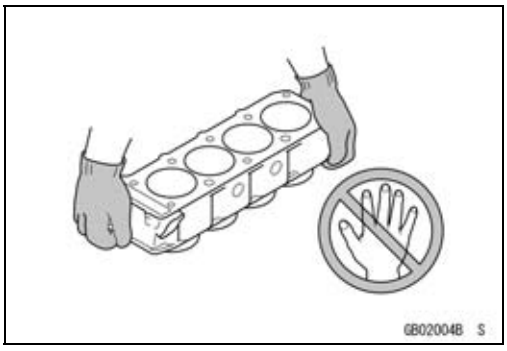

Solvent

Use a high flash-point solvent when cleaning parts. High flash-point solvent should be used according to directions of the solvent manufacturer.

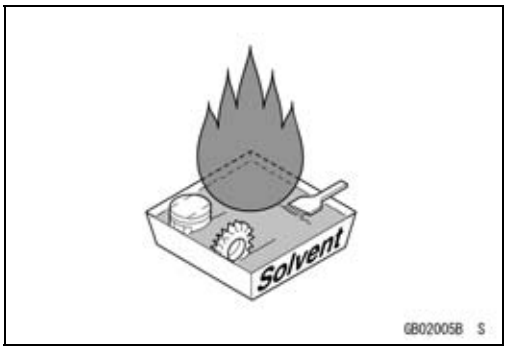

Cleaning vehicle before disassembly

Clean the vehicle thoroughly before disassembly. Dirt or other foreign materials entering into sealed areas during vehicle disassembly can cause excessive wear and decrease performance of the vehicle.

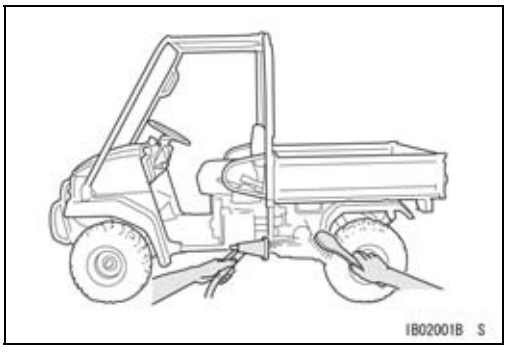

Before Servicing

Arrangement and Cleaning of Removed Parts

Disassembled parts are easy to confuse. Arrange the parts according to the order the parts were disassembled and clean the parts in order prior to assembly.

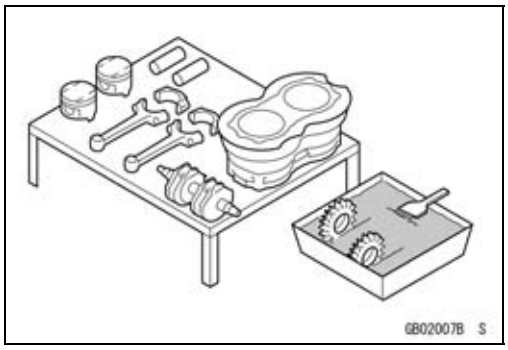

Storage of Removed Parts

After all the parts including subassembly parts have been cleaned, store the parts in a clean area. Put a clean cloth or plastic sheet over the parts to protect from any foreign materials that may collect before re-assembly.

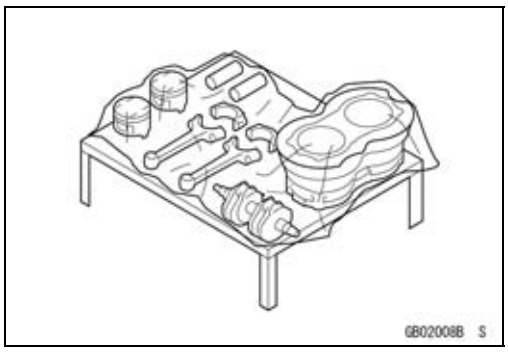

Inspection

Reuse of worn or damaged parts may lead to serious accident. Visually inspect removed parts for corrosion, discoloration, or other damage. Refer to the appropriate sections of this manual for service limits on individual parts. Replace the parts if any damage has been found or if the part is beyond its service limit.

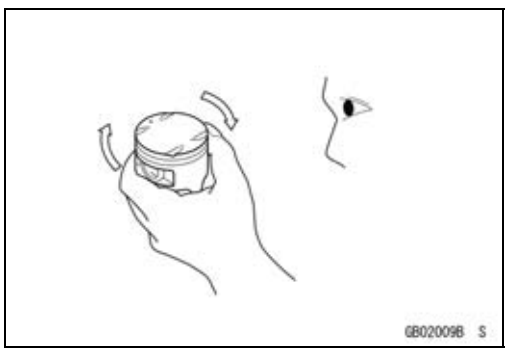

Replacement Parts

Replacement Parts must be KAWASAKI genuine or recommended by KAWASAKI. Gaskets, O-rings, Oil seals, Grease seals, circlips, cotter pins or self-locking nuts must be replaced with new ones whenever disassembled.

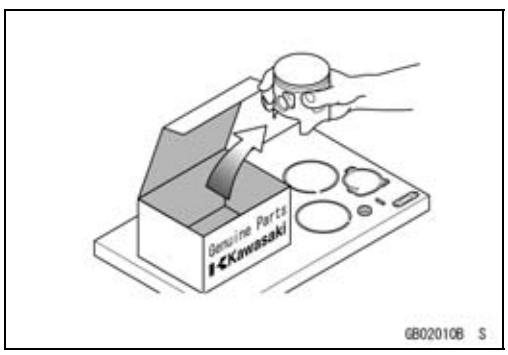

Assembly Order

In most cases assembly order is the reverse of disassembly, however, if assembly order is provided in this Service Manual, follow the procedures given.

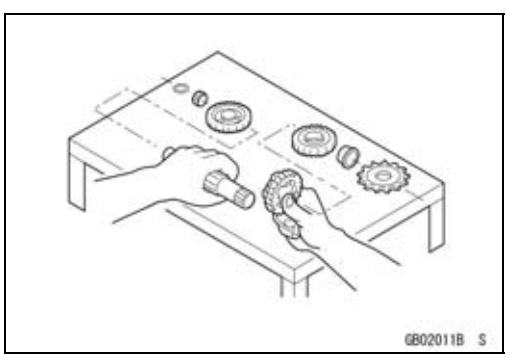

Before Servicing

Tightening Sequence

Generally, when installing a part with several bolts, nuts, or screws, start them all in their holes and tighten them to a snug fit. Then tighten them according to the specified sequence to prevent case warpage or deformation which can lead to malfunction. Conversely when loosening the bolts, nuts, or screws, first loosen all of them by about a quarter turn and then remove them. If the specified tightening sequence is not indicated, tighten the fasteners alternating diagonally.

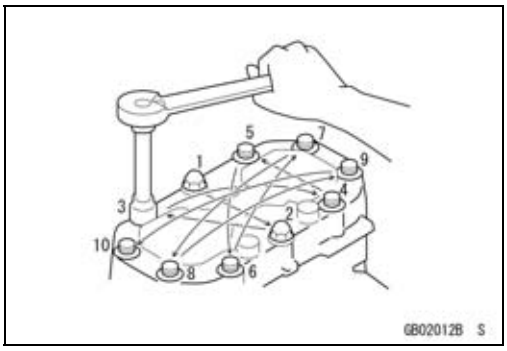

Tightening Torque

Incorrect torque applied to a bolt, nut, or screw may lead to serious damage. Tighten fasteners to the specified torque using a good quality torque wrench.

Often, the tightening sequence is followed twice initial tightening and final tightening with torque wrench.

All of the tightening torque values are for use with dry, solvent - cleaned threads unless otherwise indicated. If a fastener which should have dry, clean threads gets contaminated with lubricant, etc., applying even the specified torque could damage it.

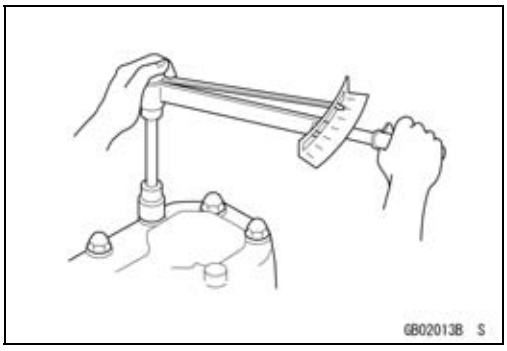

Force

Use common sense during disassembly and assembly, excessive force can cause expensive or hard to repair damage. When necessary, remove screws that have a non -permanent locking agent applied using an impact driver. Use a plastic-faced mallet whenever tapping is necessary.

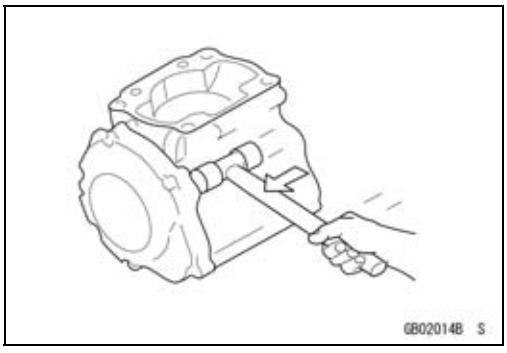

Gasket, O-ring

Hardening, shrinkage, or damage of both gaskets and O-rings after disassembly can reduce sealing performance. Remove old gaskets and clean the sealing surfaces thoroughly so that no gasket material or other material remains. Install new gaskets and replace used O-rings when re-assembling.

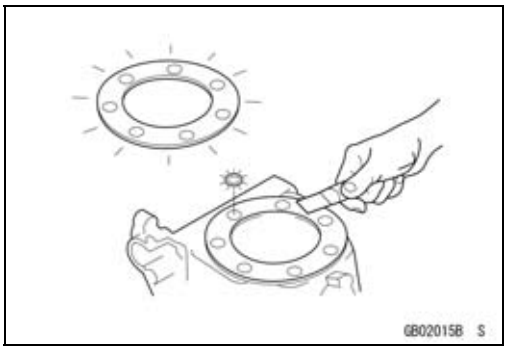

Liquid Gasket, Locking Agent

For applications that require Liquid Gasket or a Non-Permanent Locking Agent, clean the surfaces so that no oil residue remains before applying liquid gasket or locking agent. Do not apply them excessively. Excessive application can clog oil passages and cause serious damage.

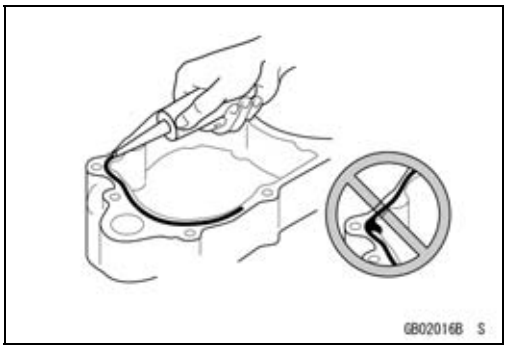

Before Servicing

Press

For items such as bearings or oil seals that must be pressed into place, apply small amount of oil to the contact area. Be sure to maintain proper alignment and use smooth movements when installing.

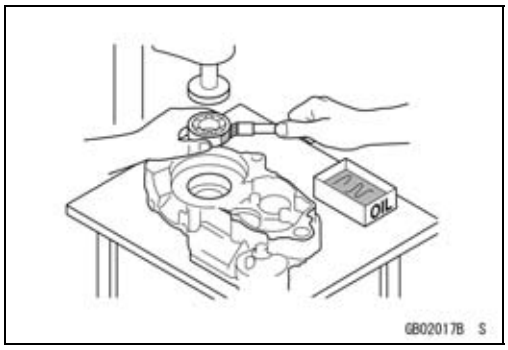

Ball Bearing and Needle Bearing

Do not remove pressed ball or needle unless removal is absolutely necessary. Replace with new ones whenever removed. Press bearings with the manufacturer and size marks facing out. Press the bearing into place by putting pressure on the correct bearing race as shown.

Pressing the incorrect race can cause pressure between the inner and outer race and result in bearing damage.

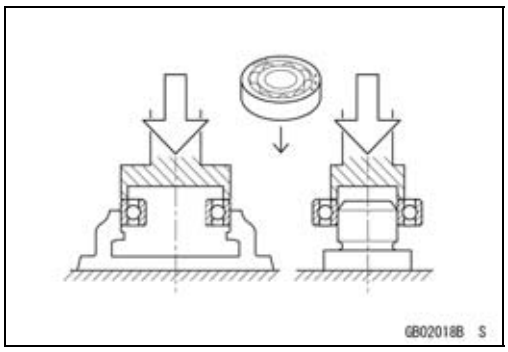

Oil Seal, Grease Seal

Do not remove pressed oil or grease seals unless removal is necessary. Replace with new ones whenever removed. Press new oil seals with manufacture and size marks facing out. Make sure the seal is aligned properly when installing.

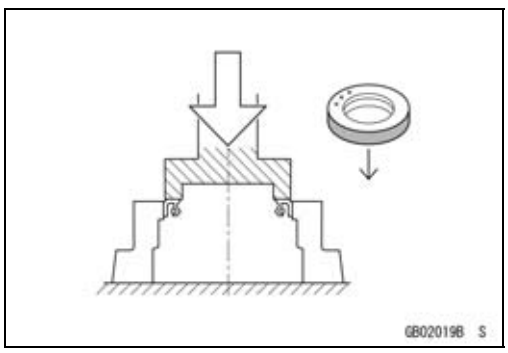

Apply specified grease to the lip of seal before installing the seal.

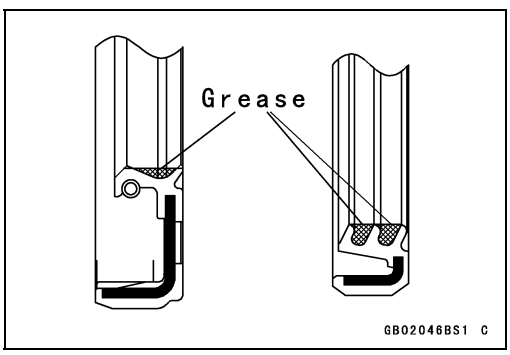

Circlips, Cotter Pins

Replace circlips or cotter pins that were removed with new ones. Take care not to open the clip excessively when installing to prevent deformation.

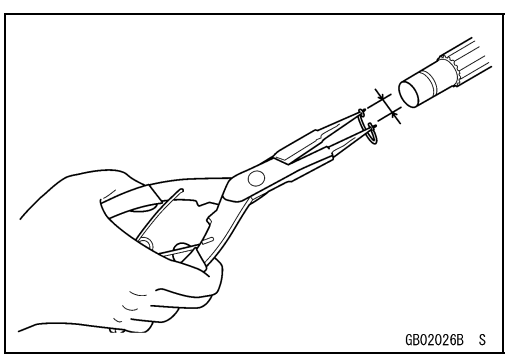

Before Servicing

Lubrication

It is important to lubricate rotating or sliding parts during assembly to minimize wear during initial operation. Lubrication points are called out throughout this manual, apply the specific oil or grease as specified.

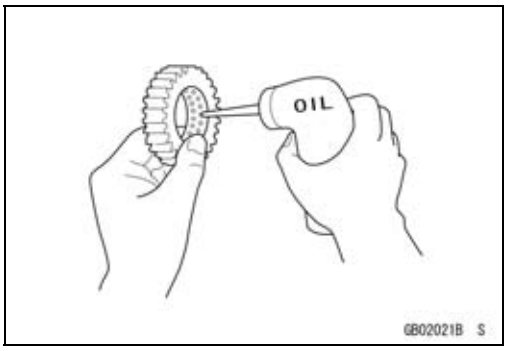

Direction of Engine Rotation

When rotating the crankshaft by hand, the free play amount of rotating direction will affect the adjustment. Rotate the crankshaft to positive direction (counterclockwise viewed from output side).

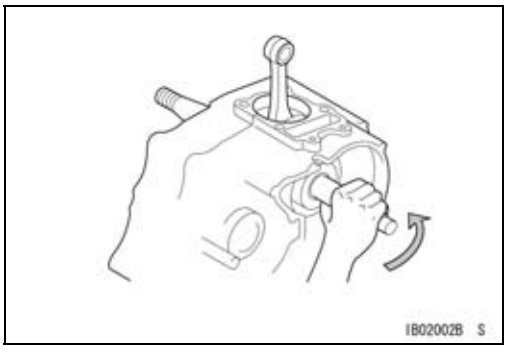

Electrical Leads

A two-color lead is identified first by the primary color and then the stripe color. Unless instructed otherwise, electrical leads must be connected to those of the same color.

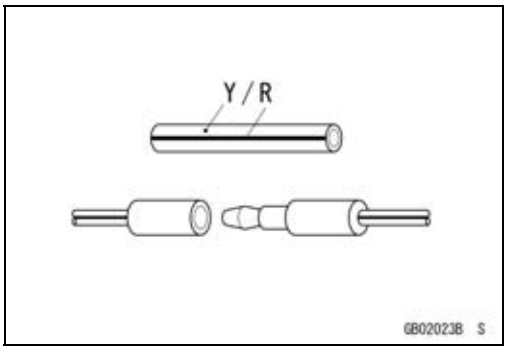

Instrument

Use a meter that has enough accuracy for an accurate measurement. Read the manufacture's instructions thoroughly before using the meter. Incorrect values may lead to improper adjustments.

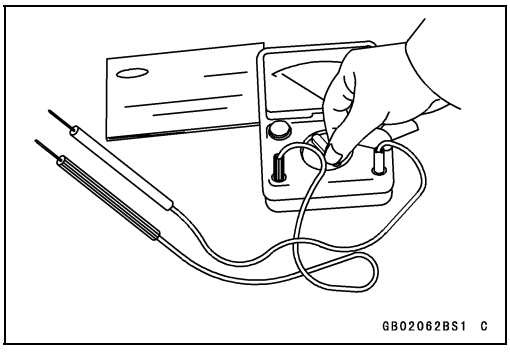

Model Identification

KAF400-A1 Left Side View

KAF400-A1 Right Side View

The KAF400-C1 is identical to the KAF400-A1 in every aspect: controls, features, and specifications except the camouflage surface treatment and weight.

Model Identification

KAF400-B1 Left Side View

KAF400-B1 Right Side View

General Specifications

Items	KAF400-A1, A6 ~ A9/C1, C6 ~ C9	KAF400-B1, B6 ~ B9
Dimensions		
Overall Length	2 720 mm (107.09 in.)	
Overall Width	1 335 mm (52.56 in.)	
Overall Height	1 802 mm (70.94 in.)	1 781 mm (70.12 in.)
Wheelbase	1 779 mm (70.04 in.)	
Tread:		
Front	1 051 mm (41.38 in.)	
Rear	999 mm (39.33 in.)	
Ground Clearance	170 mm (6.69 in.)	155 mm (6.10 in.)
Seat Height	780 mm (30.71 in.)	768 mm (30.24 in.)
Dry Mass	(A) 442 kg (975 lb) (A6, CAL) 444 kg (978 lb) (C) 448 kg (988 lb) (C6, CAL) 450 kg (992 lb)	413 kg (911 lb) (CAL) 415 kg (915 lb)
Curb Mass:	(KAF400A9) 458 kg (1 010 lb) (KAF400B9) 429 kg (946 lb) (KAF400C9) (US, CN) 464 kg (1 023 lb) (CAL) 466 kg (1 028 lb)	
Front	199 kg (439 lb) (CAL) 200 kg (441 lb)	179 kg (395 lb) (CAL) 180 kg (397 lb)
Rear	(A) 259 kg (571 lb) (A6) 261 kg (576 lb) (A-CAL) 260 kg (573 lb) (C) 265 kg (584 lb) (C6) 267 kg (589 lb) (C-CAL) 266 kg (587 lb)	250 kg (551 lb) (CAL) 251 kg (553 lb)
Fuel Tank Capacity	15.5 L (4.1 US gal)	
Cargo Bed (L × W × H)	1 044 × 900 × 245 mm (41.10 × 35.43 × 9.65 in.)	
Performance		
Minimum Turning Radius	3.3 m (10.83 ft)	
Engine		
Type	4-stroke, OHV, 2-valves, 1-cylinder	
Cooling System	Positive air-cooled	
Bore and Stroke	82 × 76 mm (3.23 × 2.99 in.)	
Displacement	401 cm³ (24.47 cu in.)	
Compression Ratio	8.6	8.3
Maximum Horsepower	9.9 KW (13.5 PS) @4 000 r/min (rpm)	9.2 KW (12.5 PS) @3 800 r/min (rpm)
Maximum Torque	29.7 N·m (3.0 kgf·m, 21.9 ft·lb) @2 400 r/min (rpm)	27.9 N·m (2.8 kgf·m, 20.6 ft·lb) @2 200 r/min (rpm)
Carburetion System	Carburetor, NIKKI 6C1026	
Starting System	Electric starter	
Ignition System	Magneto and Transistor	
Ignition Timing	20° Constant	

General Specifications

Items	KAF400-A1, A6 ~ A9/C1, C6 ~ C9	KAF400-B1, B6 ~ B9
Spark Plug	NGK BPR5ES	
Valve Timing		
Inlet:		
Open	19° BTDC	
Close	61° ABDC	
Duration	260°	
Exhaust:		
Open	58° BBDC	
Close	22° ATDC	
Duration	260°	
Lubrication System	Forced lubrication (wet sump)	
Engine Oil:		
Grade	API SG, SH, SJ, SL or SM with JASO MA, MA1 or MA2	
Viscosity	SAE10W-40	
Capacity	1.4 L (1.5 US qt)	
Drive Train		
Primary Reduction System:		
Type	Belt drive torque converter	
Reduction ratio	3.653 ~ 0.794	
Transmission Gear Ratio:		
Forward:		
High	2.916 (35/24 × 36/18)	
Low	4.315 (41/19 × 36/18)	–
Reverse:		
Low	3.750 (30/16 × 36/18)	
Final Drive System:		
Type	Gear (4WD/2WD)	Gear (2WD)
Reduction Ratio		
Front	3.851 (16/18 × 39/9)	–
Rear	4.000 (64/16)	
Overall Drive Ratio:		
Forward:		
High	9.263	
Low	13.706	–
Reverse:		
Low	11.910	
Front Final Gear Case Oil (A, C):		
Type	API GL-5 SAE140 or GL-6 SAE90 Hypoid gear oil for LSD	
Capacity	0.35 L (0.37 US qt)	
Transmission Oil:		
Type	API GL-5 Hypoid gear oil, SAE90 (above 5°C, 41°F) or SAE80 (below 5°C, 41°F)	
Capacity	2.4 L (2.5 US qt)	2.2 L (2.3 US qt)

General Specifications

Items	KAF400-A1, A6 ~ A9/C1, C6 ~ C9	KAF400-B1, B6 ~ B9
Frame		
Type	Steel tube, Ladder	
Caster (Rake Angle)	8°	
Camber	1°	
Trail	40 mm (1.57 in.)	33 mm (1.30 in.)
Tire:		
Front	24 × 9.00-10, Tubeless	22 × 9.00-10, Tubeless
Rear	24 × 11.00-10, Tubeless	22 × 11.00-10, Tubeless
Rim Size:		
Front	10 × 7.0	
Rear	10 × 8.5	
Steering Type	Rack and pinion	
Suspension:		
Front:		
Type	MacPherson strut	
Wheel travel	78 mm (3.07 in.)	
Rear:		
Type	Unit Swing	
Wheel travel	78.7 mm (3.10 in.)	
Brake Type:		
Front and Rear	Drum (Hydraulic)	
Parking brake type	Drum (Mechanical internal expansion)	
Electrical Equipment		
Battery	12 V 14 Ah (10 HR)	
Headlight:		
Type	Semi-sealed beam	
Bulb	12 V 35 W × 2	
Brake/Tail Light	12 V 21/5 W	
Reverse Light (EUR)	12 V 10 W	
Alternator:		
Type	Single-phase AC	
Rated output	12.5 V-17 A @4 000 rpm	
Load Capacity		
Maximum Vehicle Load (Including Occupants and Cargo)	420 kg (926 lb)	
Maximum Cargo Bed Load	181 kg (400 lb)	

General Specifications

Items	KAF400AA ~ AF/CA	KAF400BA ~ BF
Dimensions		
Overall Length	2 764 mm (108.82 in.)	
Overall Width	1 335 mm (52.56 in.)	
Overall Height	1 802 mm (70.94 in.)	1 781 mm (70.12 in.)
Wheelbase	1 779 mm (70.04 in.)	
Tread:		
Front	1 051 mm (41.38 in.)	
Rear	999 mm (39.33 in.)	
Ground Clearance	170 mm (6.69 in.)	155 mm (6.10 in.)
Seat Height	780 mm (30.71 in.)	768 mm (30.24 in.)
Curb Mass:	(AA ~ AB, EUR) 461 kg (1 017 lb) (AC ~, EUR) 462 kg (1 019 lb) (AA ~ AB, CAL) 463 kg (1 021 lb) (AA, US, CA) 461 kg (1 017 lb) (AB, US, CA) 462 kg (1 019 lb) (AC ~, US, CA) 463 kg (1 021 lb) (CA) 467 kg (1 030 lb) (CA, CAL) 469 kg (1 034 lb)	(BA ~ BB, EUR) 432 kg (953 lb) (BA, US, CA) 432 kg (953 lb) (BB, US, CA) (BC ~, EUR) 433 kg (955 lb) (CAL) (BC ~, US) 434 kg (957 lb)
Front	203 kg (448 lb) (AB ~, US, CA) 204 kg (450 lb) (CAL) 204 kg (450 lb)	(BA ~, EUR) 183 kg (404 lb) (BA, US, CA) 183 kg (404 lb) (BB ~, US, CA) 184 kg (406 lb) (CAL) 184 kg (406 lb)
Rear	(AA ~ AB) 258 kg (569 lb) (AA ~ AB, CAL) (AC ~) 259 kg (571 lb) (CA) 264 kg (582 lb) (CA, CAL) 265 kg (584 lb)	249 kg (549 lb) (CAL) (BC ~) 250 kg (551 lb)
Fuel Tank Capacity	15.5 L (4.1 US gal)	
Cargo Bed (L × W × H)	1 044 × 900 × 245 mm (41.10 × 35.43 × 9.65 in.)	
Performance		
Minimum Turning Radius	3.3 m (10.83 ft)	
Engine		
Type	4-stroke, OHV, 2-valves, 1-cylinder	
Cooling System	Positive air-cooled	
Bore and Stroke	82 × 76 mm (3.23 × 2.99 in.)	
Displacement	401 cm³ (24.47 cu in.)	
Compression Ratio	8.6	8.3
Maximum Horsepower	9.9 KW (13.5 PS) @4 000 r/min (rpm)	9.2 KW (12.5 PS) @3 800 r/min (rpm)
Maximum Torque	29.7 N·m (3.0 kgf·m, 21.9 ft·lb) @2 400 r/min (rpm)	27.9 N·m (2.8 kgf·m, 20.6 ft·lb) @2 200 r/min (rpm)
Carburetion System	Carburetor, NIKKI 6C1026	

General Specifications

Items	KAF400AA ~ AF/CA	KAF400BA ~ BF
Fuel Type:		
Minimum Octane Rating:		
Research Octane Number (RON)	(EUR) 91	
Antiknock Index (RON + MON)/2	(US, CA, CAL) 87	
Starting System	Electric starter	
Ignition System	Magneto and Transistor	
Ignition Timing	20° Constant	
Spark Plug	NGK BPR5ES	
Valve Timing		
Inlet:		
Open	19° BTDC	
Close	61° ABDC	
Duration	260°	
Exhaust:		
Open	58° BBDC	
Close	22° ATDC	
Duration	260°	
Lubrication System	Forced lubrication (wet sump)	
Engine Oil:		
Grade	API SG, SH, SJ, SL or SM with JASO MA, MA1 or MA2	
Viscosity	SAE10W-40	
Capacity	1.4 L (1.5 US qt)	
Drive Train		
Primary Reduction System:		
Type	Belt drive torque converter	
Reduction ratio	3.653 ~ 0.794	
Transmission Gear Ratio:		
Forward:		
High	2.916 (35/24 × 36/18)	
Low	4.315 (41/19 × 36/18)	–
Reverse:		
Low	3.750 (30/16 × 36/18)	
Final Drive System:		
Type	Gear (4WD/2WD)	Gear (2WD)
Reduction Ratio		
Front	(AA/CA) 3.851 (16/18 × 39/9) (AB ~) 3.852 (16/18 × 39/9)	–
Rear	4.000 (64/16)	

General Specifications

Items	KAF400AA ~ AF/CA	KAF400BA ~ BF
Overall Drive Ratio:		
Forward:		
High	9.263	
Low	13.706	–
Reverse:		
Low	11.910	
Front Final Gear Case Oil (A, C):		
Type	API GL-5 SAE140 or GL-6 SAE90 Hypoid gear oil for LSD	
Capacity	0.35 L (0.37 US qt)	
Transmission Oil:		
Type	API GL-5 Hypoid gear oil, SAE90 (above 5°C, 41°F) or SAE80 (below 5°C, 41°F)	
Capacity	2.4 L (2.5 US qt)	2.2 L (2.3 US qt)
Frame		
Type	Steel tube, Ladder	
Caster (Rake Angle)	8°	
Camber	1°	
Trail	40 mm (1.57 in.)	33 mm (1.30 in.)
Tire:		
Front	24 × 9.00-10, Tubeless	22 × 9.00-10, Tubeless
Rear	24 × 11.00-10, Tubeless	22 × 11.00-10, Tubeless
Rim Size:		
Front	10 × 7.0	
Rear	10 × 8.5	
Steering Type	Rack and pinion	
Suspension:		
Front:		
Type	MacPherson strut	
Wheel travel	78 mm (3.07 in.)	
Rear:		
Type	Unit Swing	
Wheel travel	78.7 mm (3.10 in.)	
Brake Type:		
Front and Rear	Drum (Hydraulic)	
Parking brake type	Drum (Mechanical internal expansion)	
Electrical Equipment		
Battery	12 V 14 Ah (10 HR)	
Headlight:		
Type	Semi-sealed beam	
Bulb	12 V 35 W × 2	
Brake/Tail Light	12 V 21/5 W	
Reverse Light (EUR)	12 V 10 W	

General Specifications

Items	KAF400AA ~ AF/CA	KAF400BA ~ BF
Alternator:		
Type	Single-phase AC	
Rated output	12.5 V-17 A @4 000 rpm	
Load Capacity		
Maximum Vehicle Load (Including Occupants and Cargo)	420 kg (926 lb)	
Maximum Cargo Bed Load	181 kg (400 lb)	

Specifications are subject to change without notice, and may not apply to every country.
A: KAF400A, MULE 610 4 × 4
B: KAF400B, MULE 600
C: KAF400C, MULE 610 4 × 4 (Camouflage-Surface-Treated Model)
CA: Canada Model
CAL: California Model
EUR: Europe Model
US: United States Model

Unit Conversion Table

Prefixes for Units

Prefix	Symbol	Power
mega	M	× 1 000 000
kilo	k	× 1 000
centi	c	× 0.01
milli	m	× 0.001
micro	μ	× 0.000001

Units of Mass

kg	×	2.205	=	lb
g	×	0.03527	=	oz

Units of Volume

L	×	0.2642	=	gal (US)
L	×	0.2200	=	gal (IMP)
L	×	1.057	=	qt (US)
L	×	0.8799	=	qt (IMP)
L	×	2.113	=	pint (US)
L	×	1.816	=	pint (IMP)
mL	×	0.03381	=	oz (US)
mL	×	0.02816	=	oz (IMP)
mL	×	0.06102	=	cu in.

Units of Force

N	×	0.1020	=	kg
N	×	0.2248	=	lb
kg	×	9.807	=	N
kg	×	2.205	=	lb

Units of Length

km	×	0.6214	=	mile
m	×	3.281	=	ft
mm	×	0.03937	=	in.

Units of Torque

N·m	×	0.1020	=	kgf·m
N·m	×	0.7376	=	ft·lb
N·m	×	8.851	=	in·lb
kgf·m	×	9.807	=	N·m
kgf·m	×	7.233	=	ft·lb
kgf·m	×	86.80	=	in·lb

Units of Pressure

kPa	×	0.01020	=	kgf/cm²
kPa	×	0.1450	=	psi
kPa	×	0.7501	=	cmHg
kgf/cm²	×	98.07	=	kPa
kgf/cm²	×	14.22	=	psi
cm Hg	×	1.333	=	kPa

Units of Speed

km/h	×	0.6214	=	mph

Units of Power

kW	×	1.360	=	PS
kW	×	1.341	=	HP
PS	×	0.7355	=	kW
PS	×	0.9863	=	HP

Units of Temperature:

$$\frac{9(°C+40)}{5} - 40 = °F \qquad \frac{5(°F+40)}{9} - 40 = °C$$

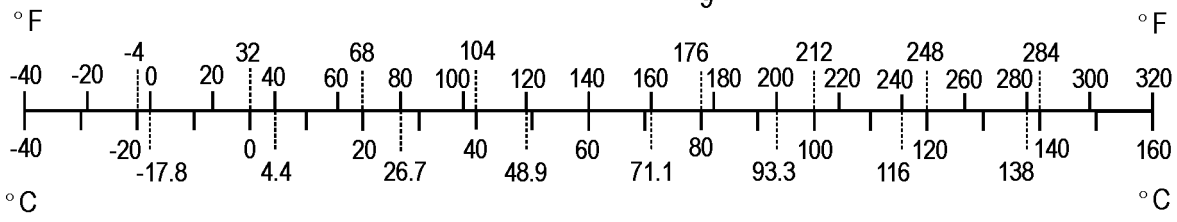

Periodic Maintenance

Table of Contents

Periodic Maintenance Chart 2-2
Torque and Locking Agent..... 2-4
Specifications 2-9
Special Tools 2-11
Periodic Maintenance Procedures..... 2-12
Fuel System..... 2-12
Throttle Pedal Free Play Inspection..... 2-12
Throttle Pedal Free Play Adjustment 2-12
Fuel Hoses And Connections Inspection..... 2-13
Fuel Hoses Replacement..... 2-13
Idle Speed Inspection 2-13
Idle Speed Adjustment..... 2-14
Fuel System Cleanliness Inspection..... 2-14
Air Cleaner Element Cleaning..... 2-15
Fuel Filter Replacement..... 2-15
Evaporative Emission Control System Inspection (CAL Model, US and CA Models of the KAF400AB ~/BB ~) 2-16
Engine Top End 2-17
Valve Clearance Inspection 2-17
Valve Clearance Adjustment..... 2-17
Spark Arrester Cleaning..... 2-18
Converter System 2-18
Converter Air Cleaner Element Cleaning/Inspection..... 2-18
Converter Dust or Water Drain Cleaning 2-19
Converter Drive Belt Inspection ... 2-20
Converter Drive Belt Deflection Inspection..... 2-21
Converter Drive Belt Deflection Adjustment 2-22
Converter Driven Pulley Shoe Inspection..... 2-22
Engine Lubrication System 2-23
Engine Oil Change..... 2-23
Oil Filter Replacement 2-24
Transmission 2-24
Transmission Oil Change..... 2-24
Electrical System 2-25
Spark Plug Cleaning/Inspection... 2-25
Spark Plug Gap Inspection 2-25
Wheels/Tires..... 2-25
Wheels Nuts Tightness Inspection..... 2-25
Tire Wear Inspection..... 2-26
Final Drive (KAF400-A/C)..... 2-26
Front Final Gear Case Oil Change..... 2-26
Brakes..... 2-27
Brake Fluid Level Inspection..... 2-27
Brake Fluid Change 2-28
Brake Pedal Play Inspection..... 2-29
Brake Master Cylinder Cup and Dust Cover Replacement..... 2-30
Brake Hose and Pipe Inspection.. 2-31
Brake Hose and Pipe Replacement..... 2-31
Brake Wheel Cylinder Assembly Replacement..... 2-32
Brake Wear Inspection..... 2-34
Parking Brake Lever Inspection ... 2-34
Steering 2-35
Steering Inspection 2-35
Steering Joint Dust Boot Inspection..... 2-36
Frame 2-36
Seat Belt Inspection..... 2-36
Electrical System 2-36
Battery Inspection 2-36
Brake Light Switch Inspection..... 2-37
General Lubrication 2-38
Bolts, Nuts, and Fasteners 2-39
Tightness Inspection 2-39

2-2 PERIODIC MAINTENANCE

Periodic Maintenance Chart

The scheduled maintenance must be done in accordance with this chart to keep the vehicle in good running condition. **The initial maintenance is vitally important and must not be neglected.**

FREQUENCY OPERATION	Whichever comes first Every	First Service	Regular Service		See Page
		After 50 h, or 1 000 km of use	Every 250 h, or 5 000 km of use	Every 500 h, or 10 000 km of use	
ENGINE					
Throttle pedal play - inspect		●		●	2-12
Fuel hoses and connections - inspect*		●	●		2-13
Fuel hose - replace	5 years				2-13
Idle speed - adjust		●	●		2-14
Fuel system cleanliness - inspect				●	2-14
Air cleaner element - clean*		●	●		2-15
Fuel filter - replace*				●	2-15
Evaporative emission control system function - inspect (CAL Model, US and CA Models of the KAF400AB ~/BB ~)		●	●		2-16
Valve clearance - inspect		●		●	2-17
Spark arrester - clean			●		2-18
Converter air cleaner element - clean*		●	●		2-18
Converter dust or water - clean*				●	2-19
Converter drive belt - inspect*			●		2-20
Converter driven pulley shoe - inspect*				●	2-22
Engine oil - change*	1 year	●	●		2-23
Oil filter - replace*		●	●		2-24
Spark plug - clean and gap		●	●		2-25
CHASSIS					
Wheel nuts tightness - inspect		●	●		2-25
Tire wear - inspect*		●	●		2-26
Front final gear case oil and transmission oil - change*	1 year	●		●	2-26 2-24
Brake fluid level - inspect		●	●		2-27
Brake fluid - change	2 years				2-28
Brake pedal play - inspect*		●	●		2-29
Brake master cylinder cup and dust seal - replace	2 years				2-30
Brake hose and pipe - inspect		●	●		2-31
Brake hose - replace	4 years				2-31
Brake wheel cylinder assembly -replace	2 years				2-32
Brake wear - inspect*			●		2-34
Parking brake lever - inspect		●	●		2-34
Steering - inspect		●	●		2-35

Periodic Maintenance Chart

FREQUENCY / OPERATION	Whichever comes first ➡ ⬇ Every	First Service	Regular Service		See Page
		After 50 h, or 1 000 km of use	Every 250 h, or 5 000 km of use	Every 500 h, or 10 000 km of use	
Steering joint dust boots - inspect		●	●		2-36
Seat belt - inspect			●		2-36
Battery - inspect			●		2-36
Brake light switch - inspect		●	●		2-37
General lubrication - perform*			●		2-38
Bolts, nuts, and fasteners tightness - inspect		●	●		2-39

●: Clean, adjust, lubricate, torque, or replace parts as necessary.
*: Service more frequently when operated in mud, dust, or other harsh riding conditions.

Torque and Locking Agent

The following tables list the tightening torque for the major fasteners, and the parts requiring use of a non-permanent locking agent or liquid gasket. All of the values are for use with dry solvent-cleaned threads unless otherwise indicated.

L: Apply a non-permanent locking agent to the threads.
LT: Apply a non-permanent locking agent (LOCTITE 243) to the threads.
MO: Apply molybdenum disulfide oil (the weight ratio of the mixture between engine oil and disulfide grease is 10 : 1).
O: Apply an oil to the threads, seated surface, or washer.
R: Replacement Parts
S: Tighten the fasteners following the specified sequence.
SS: Apply a silicone sealant to the threads.

Fastener	Torque			Remarks
	N·m	kgf·m	ft·lb	
Fuel System				
Air Cleaner Housing Bolts (~ KAF400AA/~ BA/~ CA)	17	1.7	12	
Air Cleaner Housing Bolts (KAF400AB ~/BB ~)	5.4	0.55	48 in·lb	
Carburetor Mounting Nuts	6.9	0.70	61 in·lb	
Choke Valve Screws	0.90	0.09	7.8 in·lb	L
Throttle Valve Screws	0.90	0.09	7.8 in·lb	L
Pilot Jet	0.70	0.07	6.1 in·lb	
Pilot Jet Plug	2.5	0.25	22 in·lb	
Main Jet	2.0	0.20	17 in·lb	
Drain Screw	2.0	0.20	17 in·lb	
Float Chamber Bolt	9.8	1.0	87 in·lb	
Panel Cover Bolts	4.4	0.45	39 in·lb	
Control Panel Bolt	8.8	0.90	78 in·lb	
Plate Connection Bolts	8.8	0.90	78 in·lb	
Control Panel Mounting Bolts	20	2.0	14	
Governor Arm Nut	7.4	0.75	65 in·lb	
Fuel Pump Mounting Bolts	5.4	0.55	48 in·lb	
Fuel Pump Bracket Bolt	5.4	0.55	48 in·lb	
Breather Mounting Bolt	8.8	0.90	78 in·lb	
Breather Bracket Bolt	15	1.5	11	
Breather Hose Clamp Mounting Bolt	5.5	0.56	48 in·lb	
Engine Top End				
Cylinder Head Cover Bolts	6.9	0.70	61 in·lb	
Cylinder Head Bolts	37	3.8	27	S
Engine Shroud Bolts	5.9	0.60	52 in·lb	
Valve Adjusting Nut Lock Screw	6.9	0.70	61 in·lb	
Rocker Arm Bolts	28	2.9	21	
Exhaust Pipe Clamp Nuts	20	2.0	14	S
Muffler Clamp Nuts	31	3.2	23	S
Muffler Mounting Bolts	31	3.2	23	S
Converter System				
Drive Pulley Bolt	94	9.6	69	R
Drive Pulley Cover Bolts	23	2.3	17	

Torque and Locking Agent

Fastener	Torque			Remarks
	N·m	kgf·m	ft·lb	
Spider	275	28	203	
Weight Pin Nuts	7.0	0.70	61 in·lb	R
Driven Pulley Bolt	70	7.1	52	
Deflection Bolts	9.0	0.92	80 in·lb	
Driven Wear Shoe Mounting Screws	1.1	0.11	9.7 in·lb	L
Converter Cover Bolts (~ KAF400AA/BA/CA Early Models)	4.4	0.45	39 in·lb	
Converter Cover Bolts (KAF400AA/BA/CA Late Models ~ KAF400AC/BC)	6.0	0.61	53 in·lb	LT
Converter Cover Bolts (KAF400AD ~/BD ~)	8.8	0.90	78 in·lb	
Converter Case Front Bolts (26.5 mm)	20	2.0	14	
Converter Case Rear Bolts (25 mm)	20	2.0	14	
Converter Case Cover Screws	5.0	0.5	44 in·lb	
Bracket Bolts	8.8	0.90	78 in·lb	
Air Filter Housing Bolts	20	2.0	14	
Engine Lubrication System				
Oil Line Plugs	3.9	0.40	34 in·lb	L
Oil Filter	9.8	1.0	87 in·lb	
Oil Filter Joint	6.9	0.70	61 in·lb	
Joint (KAF400-A/C)	7.4	0.75	65 in·lb	
Oil Temperature Sensor (KAF400-A/C)	5.4	0.55	48 in·lb	
Engine Oil Drain Plug	20	2.0	14	
Engine Oil Drain Plugs (Nylon)	6.9	0.70	61 in·lb	
Oil Plug	6.9	0.70	61 in·lb	
Engine Removal/Installation				
Engine Mounting Bolts and Nuts	40	4.1	30	R
Connecting Plate Bolts (M8)	28	2.9	21	L
Connecting Plate Bolts (M10)	55	5.6	41	L
Rear Axle Brake Bolts	34	3.5	25	
Engine Bottom End				
Connecting Rod Big End Cap Bolts	5.9	0.60	52 in·lb	O
Breather Valve Screw	3.4	0.35	30 in·lb	
Oil Filter Joint	6.9	0.70	61 in·lb	
Oil Line Plugs	3.9	0.40	34 in·lb	L
Crankcase Cover Bolts (thread length 45 mm, 1.7 in.)	22	2.2	16	S
Crankcase Cover Bolts (thread length 22 mm, 0.87 in.)	33	3.4	24	S
Engine Oil Drain Plugs	6.9	0.70	61 in·lb	
Transmission				
Transmission Cable Holder Bolts	42	4.2	31	
Connecting Plate Bolts (M8)	28	2.9	21	L
Connecting Plate Bolts (M10)	55	5.6	41	L
Transmission Case Bolts	8.8	0.90	78 in·lb	

Torque and Locking Agent

Fastener	Torque			Remarks
	N·m	kgf·m	ft·lb	
Speed Sensor Cap Bolt	8.8	0.90	78 in·lb	
Transmission Oil Drain Plug	15	1.5	11	
Cover Screws	4.0	0.40	35 in·lb	
Oil Line Plug	9.8	1.0	87 in·lb	L
Shift Shaft Lever Bolt	14	1.4	10	
Differential Shift Cable Holder Bolts	8.8	0.90	78 in·lb	
Plug Bolt (other than EUR Model)	15	1.5	11	
Shift Shaft Lever Stop Bolt	8.8	0.90	78 in·lb	
Differential Shift Shaft Nut	20	2.0	14	
Neutral Switch	15	1.5	11	
Reverse Switch (EUR Model)	15	1.5	11	
Positioning Bolt	25	2.5	18	
Differential Gear Housing Bolts	57	5.8	42	L
Bearing Holder	137	14	101	L
Drive Shaft Nut (KAF400B)	137	14	101	MO
Wheels/Tires				
Wheel Nuts	34	3.5	25	R
Final Drive				
Rear Axle Bracket Bolts	40	4.1	30	
Rear Axle Bracket Flange Bolts	49	5.0	36	
(Front Final Gear Case, KAF400-A/C)				
Oil Filler Cap	29	3.0	22	
Front Final Gear Case Oil Drain Plug	20	2.0	14	
Pinion Gear Nut	156	16	115	L
Pinion Gear Bearing Holder	98	10	72	
Differential Gear Hosing Bolts	49	5.0	36	L
Ring Gear Cover Bolts M8	25	2.5	18	
Ring Gear Cover Bolts M10	47	4.8	35	L
(Bevel Gear Case, KAF400-A/C)				
Bevel Gear Case Bolts	20	2.0	14	S
Yoke Stop Bolt	8.8	0.90	78 in·lb	
Driven Bevel Gear Slotted Nut	118	12	87	MO
Bearing Holder	137	14	101	L
Drive Bevel Gear Nut	137	14	101	R, MO
2WD/4WD Shift Shaft Nut	20	2.0	14	
2WD/4WD Shift Cable Holder Bolts	8.8	0.90	78 in·lb	L
Bearing Housing Bolts	42	4.2	31	
(KAF400-B)				
Bearing Holder	137	14	101	L
Drive Shaft Nut	137	14	101	MO
Brakes				
Push Rod Locknut	18	1.8	13	
Master Cylinder Reservoir Cap	3.4	0.35	30 in·lb	

Torque and Locking Agent

Fastener	Torque			Remarks
	N·m	kgf·m	ft·lb	
Reservoir Clamp Bolt	6.2	0.63	55 in·lb	
Master Cylinder Mounting Bolts	25	2.5	18	
Piston Stop Bolt	8.8	0.90	78 in·lb	
Brake Pipe Nipples	18	1.8	13	
Brake Hose Banjo Bolts	25	2.5	18	
Parking Brake Lever Mounting Bolts	25	2.5	18	
Bleed Valves	7.8	0.80	69 in·lb	
Wheel Cylinder Mounting Bolts	12	1.2	106 in·lb	
Breather Fitting (KAF400-A/C)	6.0	0.61	53 in·lb	
Front Brake Panel Mounting Bolts	34	3.5	25	L
Front Axle Nuts	147	15	108	
Brake Pipe Mounting Bolt	25	2.5	18	
Rear Brake Panel Mounting Bolts	34	3.5	25	L
Rear Axle Nuts	304	31	224	
Suspension				
Strut Mounting Nuts	44	4.5	32	
Strut Clamp Nuts	98	10	72	
Front Suspension Arm Pivot Bolts	88	9.0	65	
Front Suspension Arm Joint Nuts	78	8.0	58	
Swingarm Joint Nut	54	5.5	40	
Swingarm Rod Bolts	50	5.1	37	
Rear Shock Absorber Mounting Nuts	54	5.5	40	
Steering				
Steering Wheel Mounting Nut	54	5.5	40	R
Main Shaft Mounting Bolts	34	3.5	25	
Intermediate Shaft Clamp Bolts	25	2.5	18	
Steering Gear Assembly Bracket Bolts	54	5.5	40	
Rack Guide Spring Cap Locknut	39	4.0	29	
Tie-rod Locknuts	44	4.5	32	
Strut Clamp Nuts	98	10	72	
Tie-rod End Nuts	34	3.5	25	
Frame				
Front Bar Mounting Bolts (Lower)	98	10	72	
Front Bar Mounting Bolts (Upper)	44	4.5	32	
Rear Bar Mounting Bolts (L=20 mm)	44	4.5	32	
Rear Bar Mounting Bolts (L=16 mm)	44	4.5	32	
Seat Belt Mounting Bolts	34	3.5	25	
Electrical System				
Fan Housing Bolts	5.9	0.60	52 in·lb	
Alternator Rotor Bolt	56	5.7	41	
Ignition Coil Bolts	5.9	0.60	52 in·lb	
Spark Plug	22	2.2	16	
Stator Coil Screws	3.4	0.35	30 in·lb	

Torque and Locking Agent

Fastener	Torque			Remarks
	N·m	kgf·m	ft·lb	
Wire Lead Clamp Bolt	6.9	0.70	61 in·lb	
Starter Motor Mounting Bolts	17	1.7	12	
Starter Motor Terminal Nut	8.8	0.90	78 in·lb	
Controller Mounting Bolt (KAF400-A/C)	5.4	0.55	48 in·lb	
Regulator/Rectifier Bolts	7.8	0.80	69 in·lb	
Joint (KAF400-A/C)	7.4	0.75	65 in·lb	
Oil Temperature Sensor (KAF400-A/C)	5.4	0.55	48 in·lb	
Neutral Switch	15	1.5	11	
Reverse Switch (EUR Model)	15	1.5	11	

The table below, relating tightening torque to thread diameter, lists the basic torque for the bolts and nuts. Use this table for only the bolts and nuts which do not require a specific torque value. All of the values are for use with dry solvent-cleaned threads.

Basic Torque for General Fasteners of Engine Parts

Threads dia. (mm)	Mark of Bolt Head	Torque		
		N·m	kgf·m	ft·lb
6	4T	3.9 ~ 4.9	0.40 ~ 0.50	35 ~ 43 in·lb
6	7T	7.8 ~ 9.8	0.80 ~ 1.0	69 ~ 87 in·lb
6	9T	12 ~ 15	1.2 ~ 1.5	104 ~ 130 in·lb
8	4T	10 ~ 14	1.0 ~ 1.4	87 ~ 120 in·lb
8	7T	18 ~ 22	1.8 ~ 2.2	13 ~ 16
10	4T	20 ~ 24	2.0 ~ 2.4	14 ~ 17
10	7T	39 ~ 44	4.0 ~ 4.5	29 ~ 33

Basic Torque for General Fasteners of Frame Parts

Threads dia. (mm)	Torque		
	N·m	kgf·m	ft·lb
5	3.4 ~ 4.9	0.35 ~ 0.50	30 ~ 43 in·lb
6	5.8 ~ 7.9	0.60 ~ 0.80	52 ~ 69 in·lb
8	14 ~ 19	1.4 ~ 1.9	10 ~ 14
10	26 ~ 34	2.6 ~ 3.5	19 ~ 25
12	44 ~ 61	4.5 ~ 6.2	33 ~ 45

Specifications

Item	Standard	Service Limit
Fuel System		
Throttle Pedal Free Play	2 ~ 5 mm (0.08 ~ 0.20 in.)	– – –
Idle Speed	1 100 ~ 1 250 r/min (rpm)	– – –
Engine Top End		
Valve Clearance (when cold)	0.10 ~ 0.15 mm (0.0039 ~ 0.0059 in.)	– – –
Converter System		
Belt Width	26.1 ~ 27.3 mm (1.03 ~ 1.07 in.)	25.2 mm (0.99 in.)
Belt Deflection	22 ~ 32 mm (0.87 ~ 1.26 in.)	22 ~ 44 mm (0.87 ~ 1.73 in.)
Wear Shoe Width	– – –	1.9 mm (0.75 in.)
Engine Lubrication System		
Engine Oil:		
Type	API SG, SH, SJ, SL or SM with JASO MA, MA1 or MA2	– – –
Viscosity	SAE10W-40	– – –
Capacity	0.85 L (0.9 US qt) (when filter is not removed) 1.4 L (1.5 US qt) (when filter is removed)	– – –
Oil Level	Between H and L marks on dipstick	– – –
Transmission		
Transmission Oil:		
Type	API “GL-5” Hypoid gear oil	– – –
Viscosity	SAE90: above 5°C (41°F) or SAE80: below 5°C (41°F)	– – –
Capacity	(A, C) 2.4 L (2.5 US qt), (B) 2.2 L (2.3 US qt)	– – –
Oil Level	Between H and L level lines	– – –
Wheels/Tires		
Tire Tread Depth	– – –	3 mm (0.12 in.)
Standard Tire:		
Front	(A, C) 24 × 9.00 × 10 DUNLOP KT869M, Tubeless DURO DI-K968M, Tubeless	– – –
	(B) 22 × 9.00 × 10 DUNLOP KT901, Tubeless DURO DI-K109, Tubeless	– – –
Rear	(A, C) 24 × 11.00 × 10 DUNLOP KT869, Tubeless DURO DI-K968, Tubeless	– – –
	(B) 22 × 11.00 × 10 DUNLOP KT869, Tubeless DURO DI-K968, Tubeless	– – –
Final Drive (A, C)		
Front Final Gear Case Oil:		
Type	API "GL-5 or GL-6" hypoid gear oil for LSD (Limited Slip Differential gears)	– – –
Viscosity	SAE90 (GL-6) or SAE140 (GL-5)	– – –

Specifications

Item	Standard	Service Limit
Capacity	0.35 L (0.37 US qt)	– – –
Oil Level	Filler opening level	– – –
Brakes		
Brake Fluid:		
Type	DOT3	– – –
Fluid Level	Between upper and lower level lines	– – –
Brake Pedal Play	2 ~ 5 mm (0.08 ~ 0.20 in.)	– – –
Brake Drum Inside Diameter	165.00 ~ 165.16 mm (6.4961 ~ 6.5023 in.)	165.75 mm (6.526 in.)
Brake Shoe Lining Thickness	4 mm (0.16 in.)	1 mm (0.04 in.)
Parking Brake Lever Travel	8 ~ 12 notches (clicks)	– – –
Steering		
Steering Wheel Free Play	0 ~ 20 mm (0 ~ 0.79 in.)	– – –
Electrical System		
Spark Plug Gap	0.7 ~ 0.8 mm (0.028 ~ 0.032 in.)	– – –
Battery:		
Capacity	12 V 14 Ah (10 HR)	– – –
Electrolyte Level	Between upper and lower level (see text)	– – –
Specific Gravity	1.270 @ 20° (68°F)	– – –
Switches:		
Brake Light Switch Timing	ON after 10 mm (0.39 in.) of pedal travel	– – –

A: KAF400-A Model
B: KAF400-B Model
C: KAF400-C Model

Special Tools

Inside Circlip Pliers:
57001-143

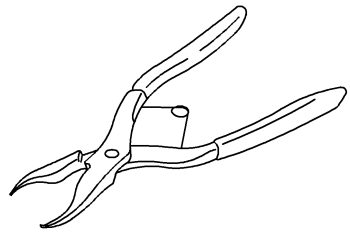

Oil Filter Wrench:
57001-1249

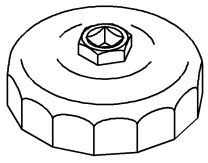

Periodic Maintenance Procedures

Fuel System

Throttle Pedal Free Play Inspection

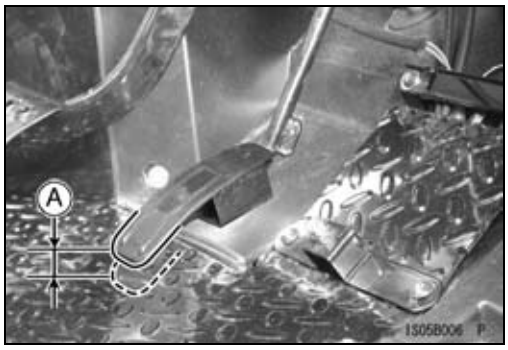

- Check that the throttle pedal moves smoothly from full open to close.

★If the throttle pedal does not return properly, lubricate the throttle cable and link (see Fuel System chapter).

- Check the throttle pedal free play [A].

Throttle Pedal Free Play
Standard: 2 ~ 5 mm (0.08 ~ 0.20 in.)

★If the free play is incorrect, adjust the throttle cable.

Throttle Pedal Free Play Adjustment

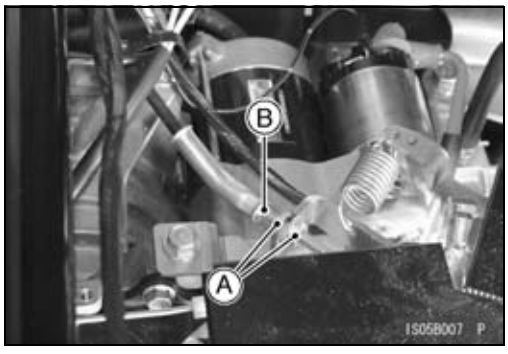

- Tilt up the cargo bed.
- Loosen the adjuster mounting nuts [A] at the cable lower end.
- Slide the adjuster [B] until the proper amount of throttle pedal free play is obtained.
- Tighten the mounting nuts securely.
- Start the engine.
- With the transmission in neutral, operate the throttle pedal a few times to make sure that the idle speed does not change.

★If the idle speed does change, the throttle cable may be improperly adjusted, incorrectly routed, or it may be damaged.

- Correct any of these conditions before operation.

⚠ WARNING

Operation with improperly adjusted, incorrectly routed or damaged cables could result in an unsafe riding condition. Follow the service manual to be make sure to correct any of these conditions.

NOTE

○*If the throttle pedal free play cannot be adjusted by using the adjuster at the cable lower end, use the cable adjuster [A] at the cable upper end. Do not forget to securely tighten the adjuster mounting nuts [B].*

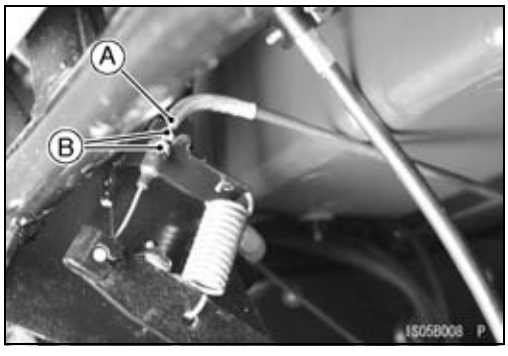

Periodic Maintenance Procedures

Fuel Hoses And Connections Inspection

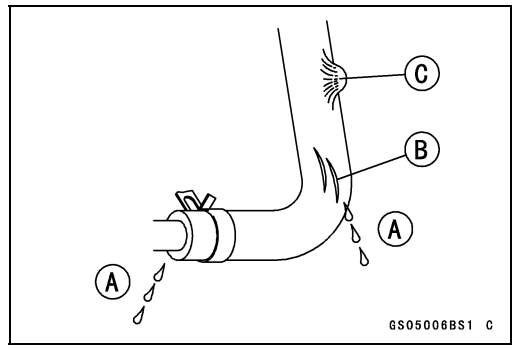

- Lift up the cargo bed and seat.
- Check the fuel hoses and fittings for deterioration, cracks and signs of leakage.

★Replace the fuel hose if any fraying, leak [A], cracks [B] or bulges [C] are noticed.

- Check that the hoses are securely connected and clamps are installed correctly.
- When installing, route the hoses according to Cable, Wire, and Hose Routing section in the Appendix chapter.
- When installing the fuel hoses, avoid sharp bending, kinking, flattening or twisting, and route the fuel hoses with a minimum of bending so that the fuel flow will not be obstructed.

★Replace the hose if it has been sharply bent or kinked.

Fuel Hoses Replacement

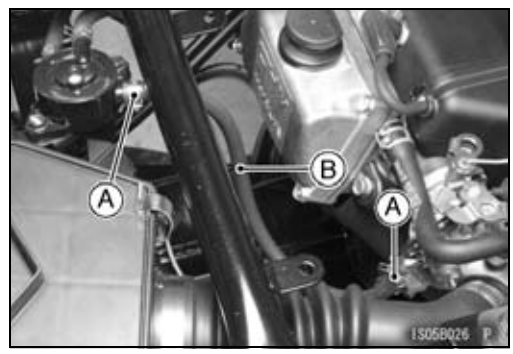

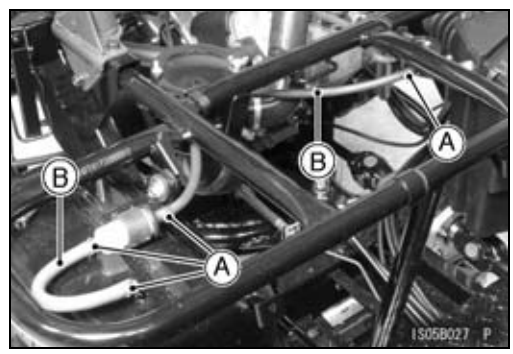

- Tilt up the cargo bed and seat.
- Slide out the clamps [A].
- Remove the hoses [B] (see Exploded View in Fuel System chapter).
- When installing, route the hoses according to Cable, Wire, and Hose Routing section in the Appendix chapter.
- When installing the fuel hoses, avoid sharp bending, kinking, flattening or twisting, and route the fuel hoses with a minimum of bending so that the fuel flow will not be obstructed.

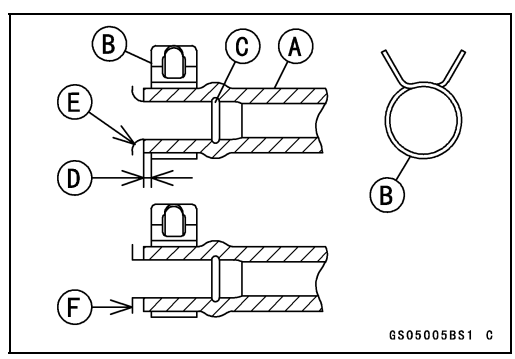

- Fit the fuel hose [A] onto the fitting fully and install the plate clamp [B] beyond the raised rib [C].
  1 ~ 2 mm (0.0039 ~ 0.0078 in.) [D]

○The hose end must reach the filler [E] or be as near as possible to the step [F].

Idle Speed Inspection

- Start the engine and warm it up thoroughly.
- Tilt up the cargo bed.
- Check the idle speed with a suitable tachometer.

Idle Speed
Standard: 1 100 ~ 1 250 r/min (rpm)

★If the idle speed is out of the specified range, adjust it.

Periodic Maintenance Procedures

Idle Speed Adjustment

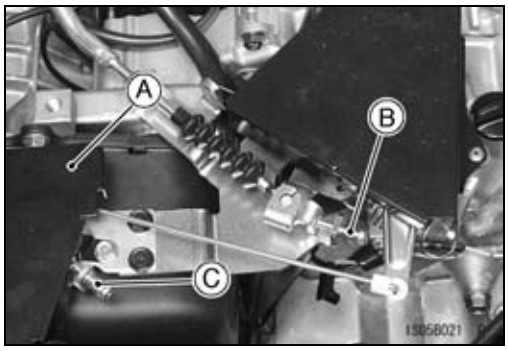

- Start the engine and warm it up thoroughly.
- Tilt up the cargo bed.
- Remove:
  Guard Plate (see Frame chapter)
  Link Plate Cover [A]
- Loosen the accel lever stopper screw [B] on the control panel and idle adjusting screw [C] on the link bracket.

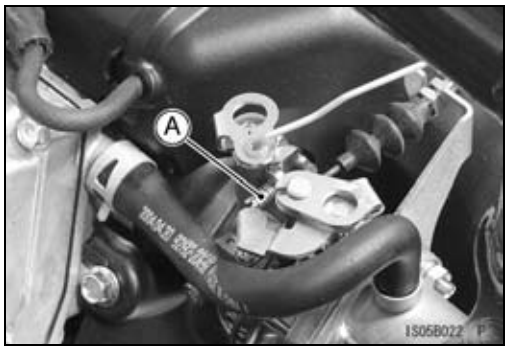

- Turn the idle adjusting screw [A] at the carburetor until the idle speed is correct.

Idle Speed
Standard: 1 100 ~ 1 250 r/min (rpm)

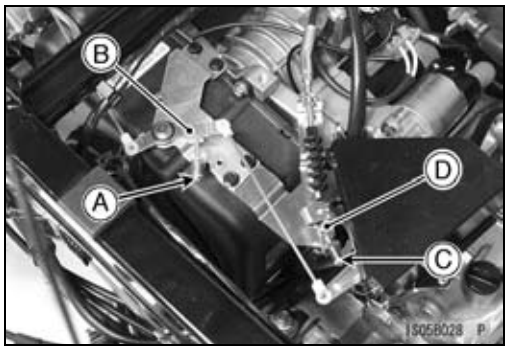

- After the adjustment, screw in the idle adjusting screw [A] on the link bracket until the screw lightly touches the link lever [B].
- Finally screw in the accel lever stopper screw [C] until it keeps clearance by 1 mm (0.04 in.) to accel lever [D].
- Depress and release the throttle pedal a few times to make sure that the idle speed does not change. Readjust if necessary.

Fuel System Cleanliness Inspection

⚠ WARNING

Gasoline is extremely flammable and can be explosive under certain conditions. Turn the ignition switch OFF. Do not smoke. Make sure the area is well-ventilated and free from any source of flame or sparks; this includes any appliance with a pilot light.

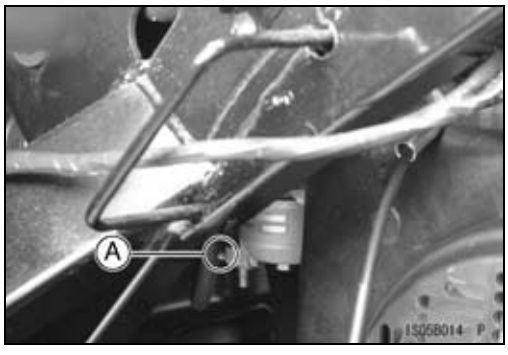

- Remove:
  Cargo Bed (tilt up)
- Place a suitable container under the carburetor.
- Turn out the drain screw [A] a few turns to drain some fuel from the carburetor, and check for water or dirt in the fuel.

★If any water or dirt comes out, clean the carburetor and fuel tank (see Fuel Tank) and check the fuel filter.

- Tighten the drain screw securely.

Periodic Maintenance Procedures

Air Cleaner Element Cleaning

NOTE

○*In dusty areas, the element should be cleaned more frequently than the recommended interval.*
○*After riding through rain or on muddy roads, the element should be cleaned immediately.*

⚠ WARNING

Gasoline and low flash-point solvents can be flammable and/or explosive and cause severe burns. Clean the element in a well-ventilated area, and take care that there is no spark or flame anywhere near the working areas. Do not use gasoline or low flash-point solvents to clean the element.

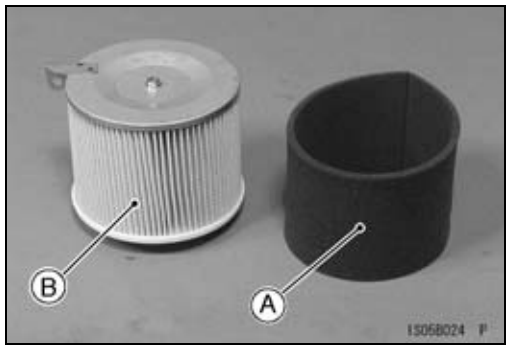

- Remove:
  Air Cleaner Element (see Air Cleaner Element Removal)
  Foam Element [A]
  Paper Element [B]
- Clean the foam element in a bath of high flash-point solvent using a soft bristle brush.
- Squeeze it dry in a clean towel.

NOTICE

Do not wring the element or blow it dry; the element can be damaged.

- Inspect the foam element for damage.

★If it is torn, punctured, or hardened, replace it.

NOTE

○*Replace the foam element after cleaning it five times or if it is damaged.*

- Clean the paper element by tapping it lightly to loosen dust.
- Blow away the remaining dust by applying compressed air from the inside to the outside (from the clean side to the dirty side).
- Inspect the element material for damage.

★If any part of the element is damaged, the element must be replaced.

Fuel Filter Replacement

⚠ WARNING

Gasoline is extremely flammable and can be explosive under certain conditions. Turn the ignition switch OFF. Do not smoke. Make sure the area is well-ventilated and free from any source of flame or sparks; this includes any appliance with a pilot light.

- Tilt up the seat.
- Open the rubber damper [A].
- Remove the clamps [B] and disconnect the fuel hoses.
- Remove:
  Fuel Filter [C]

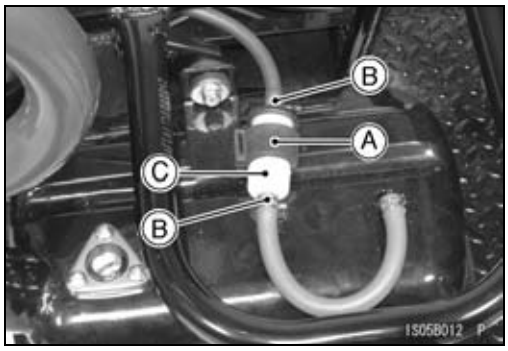

- Install the fuel filter [A] so that the arrow [B] on it shows the fuel flow from the fuel tank to the fuel pump.
- Install the clamps securely.

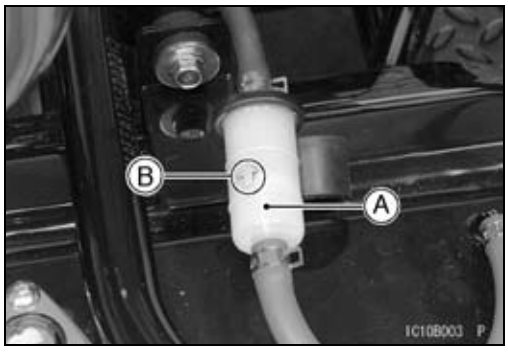

Evaporative Emission Control System Inspection (CAL Model, US and CA Models of the KAF400AB ~/BB ~)

- Inspect the canister as follows.

○Tilt up the seat.
○Remove the canister [A], and disconnect the hoses from the canister.
○Visually inspect the canister for cracks or other damage.
★If the canister has any cracks or bad damage, replace it with a new one.

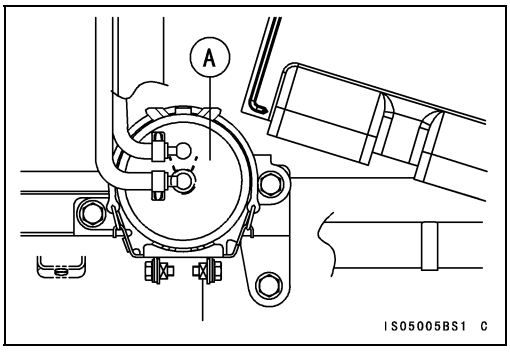

NOTE

○*The canister is designed to work well through the utility vehicle's life without any maintenance if it is used under normal conditions.*

- Check the hoses of the evaporative emission control system as follows.

○Check that the hoses are securely connected and clips are in position.
○Replace any kinked, deteriorated or damaged hoses.
○Run the hoses according to Cable, Wire, and Hose Routing section in the Appendix chapter. Refer to the diagram of the evaporative emission control system in the Fuel System chapter too.
○When installing the hoses, avoid sharp bending, kinking, flattening or twisting, and run the hoses with a minimum of bending so that the emission flow will not be obstructed.

Periodic Maintenance Procedures

Engine Top End

Valve Clearance Inspection

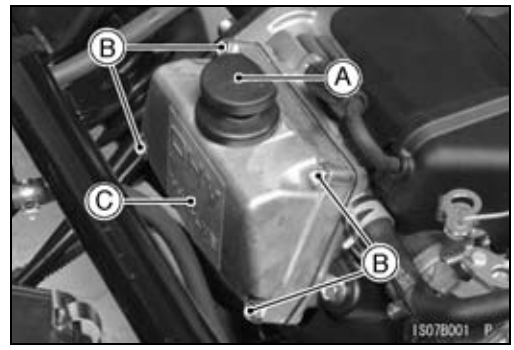

NOTE

○*Valve clearance must be checked when the engine is cold (at room temperature).*

- Remove:
  Guard Plates (see Frame chapter)
  Cooling Fan Cover (see Alternator Rotor and Stator Removal section in the Electrical System chapter)
  Oil Level Gauge [A]
  Cylinder Head Cover Bolts [B]
  Cylinder Head Cover [C]
  Spark Plugs

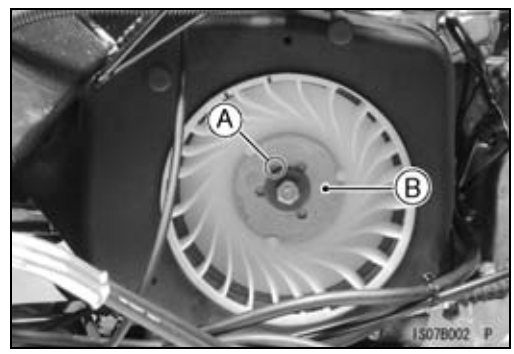

- Position the crankshaft at TDC of the end of the compression stroke.
- Turn the alternator rotor counterclockwise so that the projection [A] on the plate [B] comes to the cylinder as shown.

○Remove the spark plug, if the thin rod is inserted in the plug hole, and the rotor is rotated, a top position of the piston is understood.

- Check both rocker arms are free. If not, turn the rotor more one turn and free both rocker arms.

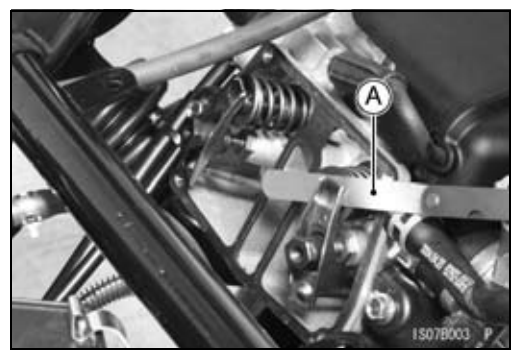

- Using a thickness gauge [A], measure the valve clearance between the rocker arm and the valve stem.

★If the valve clearance is incorrect, adjust it.

Valve Clearance (when cold)
Standard: 0.10 ~ 0.15 mm (0.0039 ~ 0.0059 in.)

Valve Clearance Adjustment

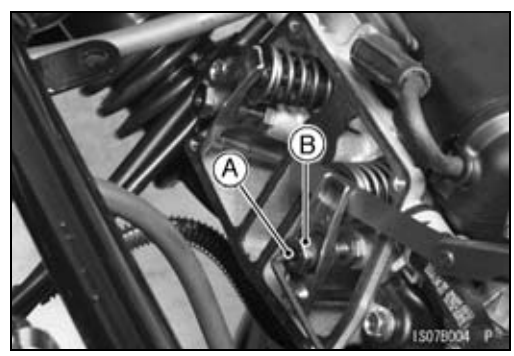

- Loosen the valve adjusting nut lock screw [A].
- Turn the valve adjusting nut [B] until the correct clearance is obtained.
- Holding the adjusting nut, tighten the lock screw.

Torque - Valve Adjusting Nut Lock Screw: 6.9 N·m (0.70 kgf·m, 61 in·lb)

Spark Arrester Cleaning

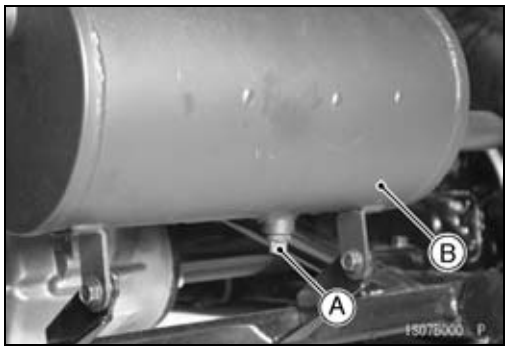

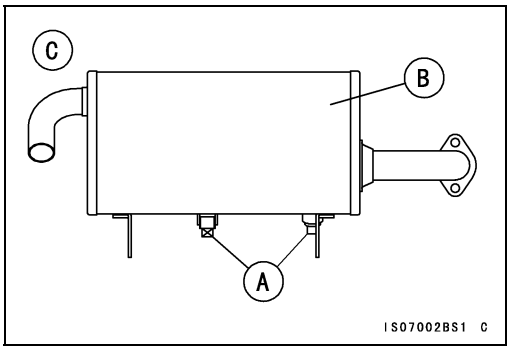

⚠ WARNING

The muffler can become extremely hot during normal operation and cause severe burns. Since the engine must be running during this procedure, wear heat-resistant gloves while cleaning the spark arrester.

- Remove the drain plugs [A] from the muffler [B].
- Apply the parking brake.
- In an open area away from combustible materials, start the engine with the gear shift lever in the N (neutral) position.
- Raise and lower engine speed while tapping on the muffler with a rubber mallet until the carbon particles are purged from the muffler.

⚠ DANGER

Exhaust gas contains carbon monoxide, a colorless, odorless poisonous gas. Inhaling carbon monoxide can cause serious brain injury or death. DO NOT run the engine in enclosed areas. Operate only in a well-ventilated area.

- Stop the engine.
- Install the drain plugs.
  [C] CAL Model, US and CA Models of the KAF400AB ~/BB ~

Converter System

Converter Air Cleaner Element Cleaning/Inspection

NOTE

○*In dusty areas, the element should be cleaned more frequently than the recommended interval.*
○*After riding through rain or on muddy roads, the element should be cleaned immediately.*

⚠ WARNING

Gasoline and low flash-point solvents can be flammable and/or explosive and cause severe burns. Clean the element in a well-ventilated area, and take care that there is no spark or flame anywhere near the working areas. Do not use gasoline or low flash-point solvents to clean the element.

Periodic Maintenance Procedures

- Remove the air cleaner element (see Converter System chapter).
- Separate the foam element [A] from the paper element [B].
- Clean the foam element in a bath of a high flash-point solvent, and then squeeze it dry in a clean towel. Do not wring the element or blow it dry; the element can be damaged.
- Inspect the foam element for damage. If it is torn, punctured, or hardened, replace it.

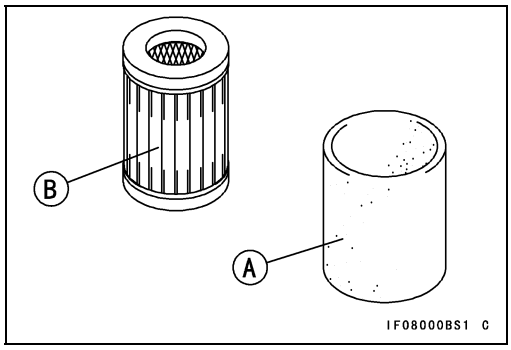

NOTE

○*Replace the foam element after cleaning it five times or if it is damaged.*

- Clean the paper element by tapping it lightly to loosen dust.
- Blow away the remaining dust by applying compressed air from the inside to the outside (from the clean side to the dirty side).
- Inspect the element material for damage. If any part of the element is damaged, the element must be replaced.

Converter Dust or Water Drain Cleaning

(~ KAF400AC/BC/CA)

- Remove the drain plug [A] on the bottom of the converter cover to expel dust and/or water accumulated inside.
- After the draining, insert the drain plug until the flange of the plug contacts on the face [B] of the cover.

○Do not apply grease to oval line part [C] of the plug, when installing it. However, the soapy water is permitted.

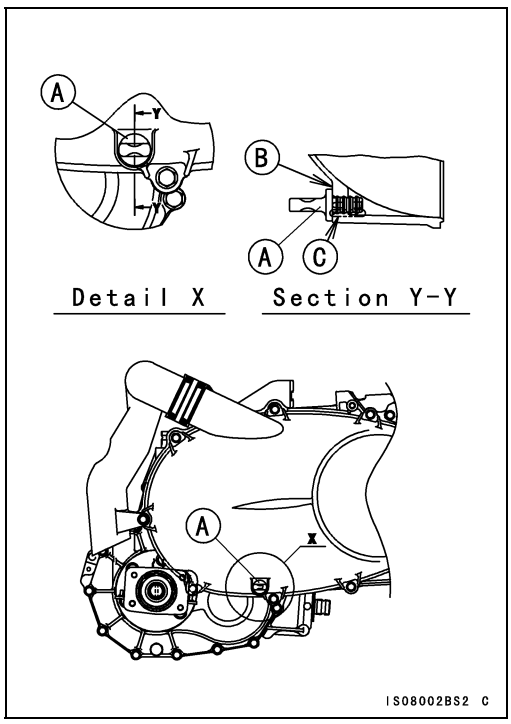

Periodic Maintenance Procedures

(KAF400AD ~/BD ~)

- Remove the drain cover [A] and clamp [B] on the bottom of the converter cover to expel dust and/or water accumulated inside.
- After the draining, install the drain cover and clamp.

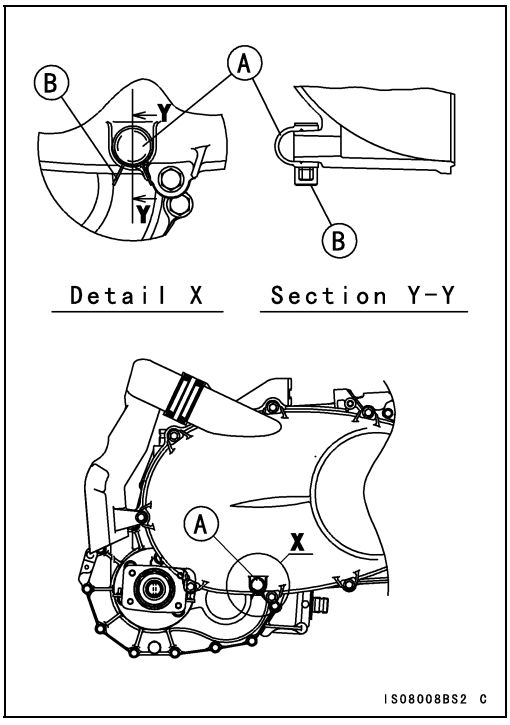

Converter Drive Belt Inspection

- Remove the driver belt (see Converter System chapter).
- Measure the width [A] of the belt at several locations with a pair of suitable straightedges [B] as shown.

★If any measurements exceed the service limit, replace the belt.

Belt Width

Standard:	**26.1 ~ 27.3 mm (1.03 ~ 1.07 in.)**
Service Limit:	**25.2 mm (0.99 in.)**

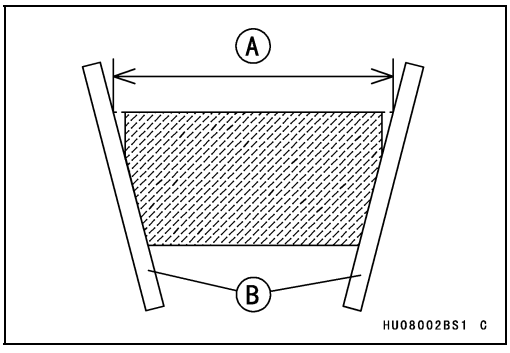

- Check the belt for wear, cracks, breaks or peeling.

★If necessary, replace the belt with a new one.

Belt [A]
Crack [B]
Broken [C]

NOTE

○*Whenever the belt is replaced, inspect the drive and the driven pulleys.*

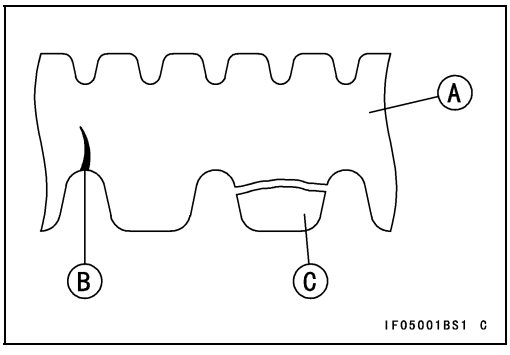

Periodic Maintenance Procedures

Converter Drive Belt Deflection Inspection

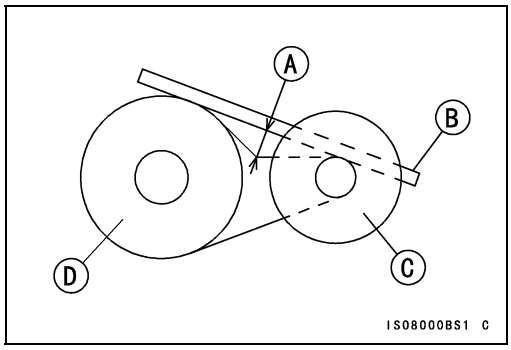

- Remove the torque converter cover (see Converter System chapter).
- Put the transmission in neutral and rotate the driven pulley by hand to make sure the belt is shifted all the way to the top of the driven pulley.
- Measure the belt deflection [A] at the three locations by rotating the pulley as shown:

○Place a straightedge [B] on top of the belt between the drive pulley [C] and the driven pulley [D].

○Use a ruler to push the belt away from the straightedge. Push hard, but with no more force than 59 N (6 kgf, 13 lb).

Belt Deflection

Standard:	**22 ~ 32 mm (0.87 ~ 1.26 in.)**
Service Limit:	**22 ~ 44 mm (0.87 ~ 1.73 in.)**

★If the belt deflection of all of the three locations is within the specified range, the deflection is normal.

★If the belt deflection is not within the specified range, first measure the drive belt width (see Drive Belt Inspection). Adjust the deflection by adding or removing shims under the deflection bolts.

- When adjusting the deflection, less is better than more. Less deflection will maintain better performance for more time as the belt width decreases by normal wear, which causes the deflection to increase with usage.

★Even if the deflection is adjusted, when the belt deflection is greater than the service limit, replace the drive belt.

Converter Drive Belt Deflection Adjustment

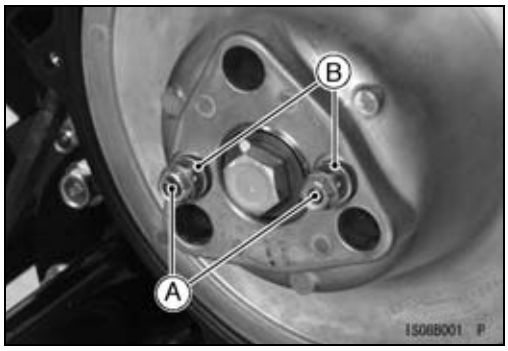

- Inspect the drive belt deflection (see Drive Belt Deflection Inspection).

★If the belt deflection is more than 44 mm (1.73 in.), remove the deflection bolts [A] and replace the shims [B]. To decrease the deflection, increase the thickness of the shims.

○The rule-of-thumb is: 0.1 mm (0.004 in.) change in shim thickness equals about 1.4 mm (0.055 in.) change in belt deflection.

★If the belt deflection is less than 22 mm (0.87 in.), remove the deflection bolts and replace the shims. To increase the deflection, decrease the thickness of the shims.

○The rule-of-thumb is: 0.1 mm (0.004 in.) change in shim thickness equals about 1.6 mm (0.063 in.) change in belt deflection.

shims

Part No.	Thickness
92180-0150	0.8 mm (0.032 in.)
92180-0151	1.0 mm (0.039 in.)
92180-0152	1.2 mm (0.047 in.)
92180-0153	1.4 mm (0.055 in.)
92180-0154	1.6 mm (0.063 in.)
92180-0155	1.8 mm (0.071 in.)
92180-0156	2.0 mm (0.079 in.)
92180-0157	2.3 mm (0.091 in.)
92180-0158	2.5 mm (0.098 in.)
92180-0159	2.8 mm (0.110 in.)
92180-0160	3.2 mm (0.126 in.)

- Tighten:

  Torque - Deflection Bolts: 9.0 N·m (0.92 kgf·m, 80 in·lb)

- With the transmission in neutral, rotate the driven pulley to allow the belt to return to the top of the sheaves before measuring the belt deflection.
- Measure the belt deflection again and repeat the above procedures until it is within the standard range.

Converter Driven Pulley Shoe Inspection

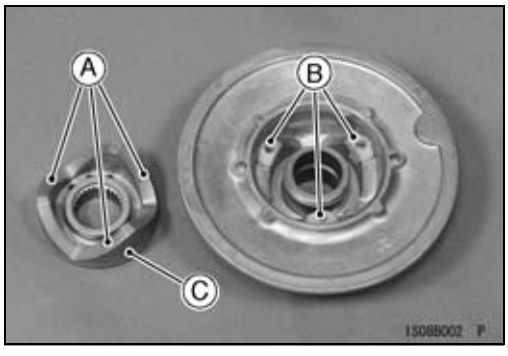

- Remove the driven pulley (see Converter System chapter).
- Disassemble the driven pulley (see Converter System chapter).

★If the ramps [A] or the wear shoes [B] are damaged or worn, replace the ramp cap [C] or the shoes.

Periodic Maintenance Procedures

- Measure the width [A] between the upper surface [B] of the movable sheave [C] and the bottom edge [D] of worn area of the shoe [E].

★If the width is greater than the service limit, replace the shoe.

Wear Shoe Width
Service Limit: 1.9 mm (0.075 in.)

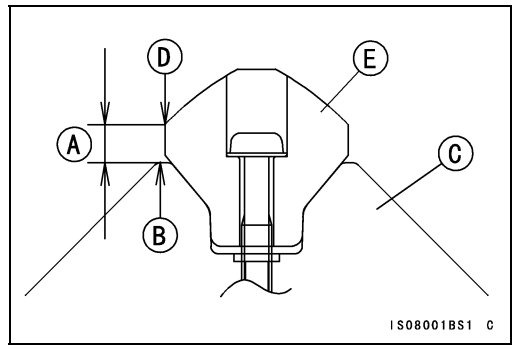

Engine Lubrication System

Engine Oil Change

- Warm up the engine so that the oil will pick up any sediment and drain easily.
- Place an oil pan beneath the engine.
- Remove the engine oil drain plug [A], and let the oil drain completely.

★If the oil filter is to be changed, replace it with a new one (See Oil Filter Replacement).

- Replace the gasket with a new one.
- After the oil has completely drained out, install the drain plug with the gasket.

Torque - Engine Oil Drain Plug: 20 N·m (2.0 kgf·m, 14 ft·lb)

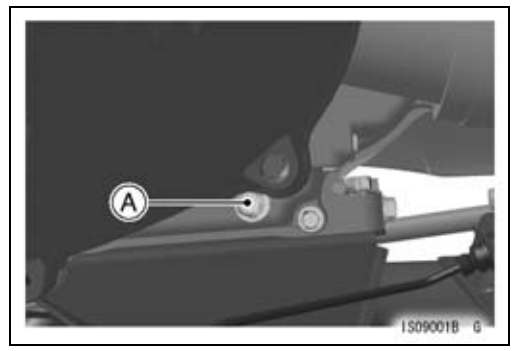

- Slowly and evenly fill the engine with a good quality oil as specified in the table.

Engine Oil

Type:	**API SG, SH, SJ, SL or SM with JASO MA, MA1 or MA2**
Viscosity:	**SAE10W-40**
Capacity:	**0.85 L (0.9 US qt) (when filter is not removed)**
	1.4 L (1.5 US qt) (when filter is removed)
Oil Level:	**Between H and L marks on dipstick**

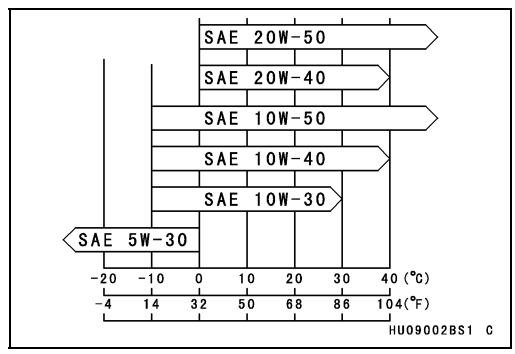

NOTE

○*Do not add any chemical additive to the oil. Oils fulfilling the above requirements are fully formulated and provide adequate lubrication for both the engine and the clutch.*

○*Although 10W-40 engine oil is the recommended oil for most conditions, the oil viscosity may need to be changed to accommodate atmospheric conditions in your riding area.*

- Thoroughly warm up the engine, and check for oil leakage and the oil level (see Oil Level Inspection in the Engine Lubrication System chapter).

Periodic Maintenance Procedures

Oil Filter Replacement

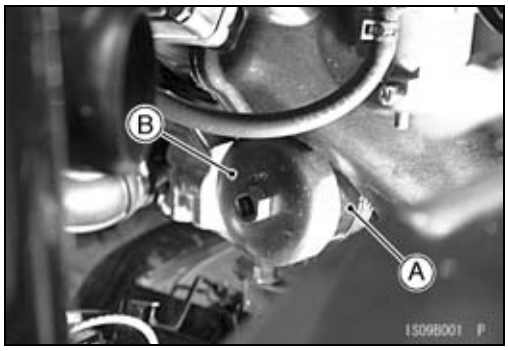

- Drain the engine oil.
- Remove the oil filter [A] with the oil filter wrench [B].

Special Tool - Oil Filter Wrench: 57001-1249

○When unscrewing the oil filter, cover the filter bottom with a clean cloth so as not to spill the engine oil out of the filter. Any spilled oil should be wiped up completely.

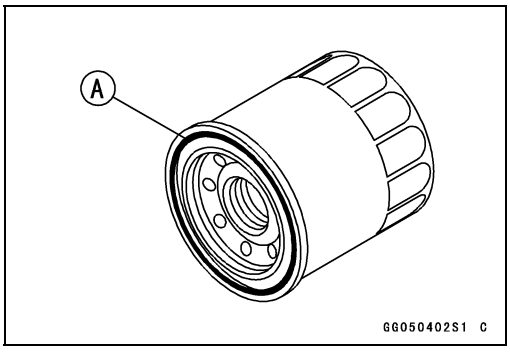

- Replace the filter with a new one.
- When installing the oil filter, be careful of the following.

○Apply oil to the gasket [A] before installation.
○Tighten the filter with the filter wrench.

Special Tool - Oil Filter Wrench: 57001-1249

Torque - Oil Filter: 9.8 N·m (1.0 kgf·m, 87 in·lb)

○Pour in the specified type and amount of oil.

- Thoroughly warm up the engine, and check for oil leakage and the oil level (see Oil Level Inspection in the Engine Lubrication System chapter).

Transmission

Transmission Oil Change

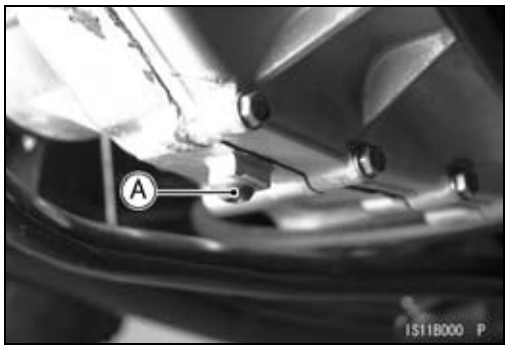

- Warm up the oil by running the vehicle so that the oil will pick up any sediment and drain easily. Then stop the vehicle.
- Place an oil pan beneath the transmission case.
- Remove the transmission oil drain plug [A], and let the oil drain completely.
- Replace the gasket with a new one.
- After the oil has completely drained out, install the drain plug with the gasket.

Torque - Transmission Oil Drain Plug : 15 N·m (1.5 kgf·m, 11 ft·lb)

- Fill the transmission case with a good quality oil as specified in the table.

Transmission Oil

Type:	**API "GL-5" Hypoid gear oil**
Viscosity:	**SAE90: above 5°C (41°F) or**
	SAE80: below 5°C (41°F)
Capacity:	**KAF400A/C: 2.4 L (2.5 US qt)**
	KAF400B: 2.2 L (2.3 US qt)
Oil Level:	**Between H and L lines on dipstick**

- Check the oil level (see Transmission Oil Level Inspection in the Transmission chapter).

Periodic Maintenance Procedures

Electrical System

Spark Plug Cleaning/Inspection

- Remove the spark plug (see Electrical System chapter).
- The plug may also be cleaned using a nonmetal brush (nylon etc.).

★If the spark plug electrodes are corroded or damaged, or if the insulator is cracked, replace the plug. Use the standard spark plug or its equivalent.

Spark Plug Gap Inspection

- Measure the gap [A] with a wire-type thickness gauge.

★If the gap is incorrect, carefully bend the side electrode [B] with a suitable tool to obtain the correct gap.

Spark Plug Gap
0.7 ~ 0.8 mm (0.028 ~ 0.032 in.)

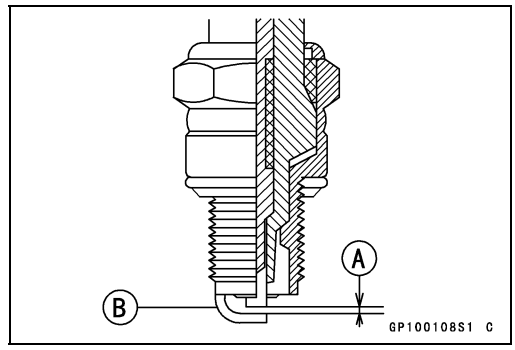

Wheels/Tires

Wheels Nuts Tightness Inspection

- Check the tightness of all the wheel nuts.

★If there are loose nut, first loosen by 1/2 turn, then re-torque them to the specified torque.

Torque - Wheel Nuts: 34 N·m (3.5 kgf·m, 25 ft·lb)

○Tighten the wheel nuts [1] ~ [4] in a criss-cross pattern.

Tire Wear Inspection

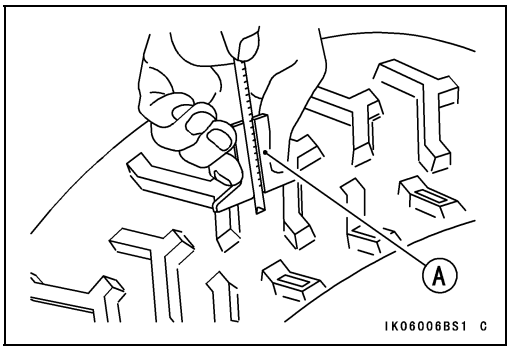

- Examine the tire for damage and wear.

★If the tire is cut or cracked, replace it.

○Lumps or high spots on the tread or sidewalls indicate internal damage, requiring tire replacement.

○Remove any foreign objects from the tread. After removal, check for leaks with a soap and water solution.

- Measure the tread depth at the center of the tread with a depth gauge [A]. Since the tire may wear unevenly, take measurements at several places.

★If any of the measurements is less than the service limit, replace the tire.

Tire Tread Depth
Service Limit 3 mm (0.12 in.)

Standard Tire
KAF400-A/C

Front:	**24 × 9.00-10 DUNLOP KT869M Tubeless**
	24 × 9.00-10 DURO DI-K968M Tubeless
Rear:	**24 × 11.00-10 DUNLOP KT869 Tubeless**
	24 × 11.00-10 DURO DI-K968 Tubeless

KAF400-B

Front:	**22 × 9.00-10 DUNLOP KT901 Tubeless**
	22 × 9.00-10 DURO DI-K109 Tubeless
Rear:	**22 × 11.00-10 DUNLOP KT869 Tubeless**
	22 × 11.00-10 DURO DI-K968 Tubeless

Final Drive (KAF400-A/C)

Front Final Gear Case Oil Change

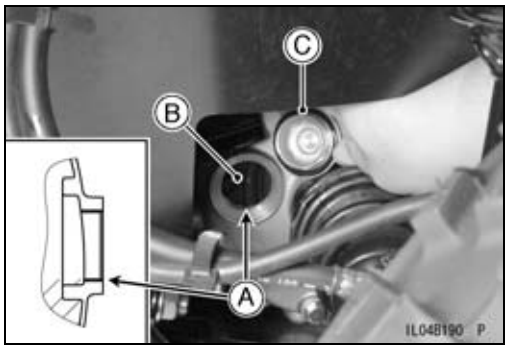

- Warm up the oil by running the vehicle so that the oil will pick up any sediment and drain easily. Then stop the vehicle.
- Park the vehicle so that it is level, both side-to-side and front-to-rear.
- Remove:
  Front Guard (see Frame chapter)
  Front Final Gear Case Skid Plate (see Front Final Gear Case Oil Level Inspection in the Final Drive chapter)
- Place an oil pan beneath the front final gear case and remove the drain plug [A].

⚠ WARNING

Oil on tires can cause loss of traction and an accident resulting in serious injury or death. When draining or filling the final gear case, do not spill oil the tire or rim. Clean any oil that may spill with a high flash-point solvent.

Periodic Maintenance Procedures

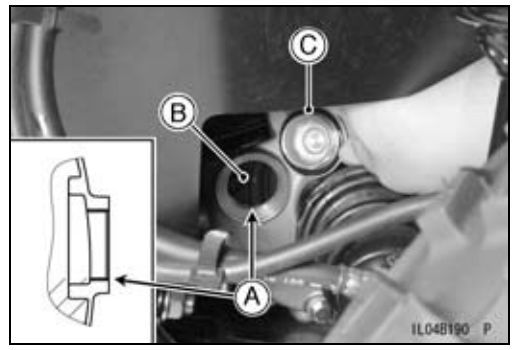

- After the oil has completely drained out, install the drain plug with a new aluminum gasket, and tighten it.

  Torque - Front Final Gear Case Oil Drain Plug: 20 N·m (2.0 kgf·m, 14 ft·lb)

- Fill the gear case up to the bottom [A] of filler opening [B] with the oil specified below.

  Front Final Gear Case Oil

Type:	**API "GL-5 or GL-6" hypoid gear oil for LSD (Limited Slip Differential gears)**
Viscosity:	**SAE90 (GL-6), or SAE140 (GL-5)**
Capacity:	**0.35 L (0.37 US qt)**
Oil Level	**Filler opening level**

NOTE

○*"GL-5 or GL-6" indicate a quality and additive rating.*

- Be sure the O-ring [C] is in place, and tighten the filler cap.

  Torque - Front Final Gear Case Oil Filler Cap: 29 N·m (3.0 kgf·m, 22 ft·lb)

Brakes

Brake Fluid Level Inspection

- With the vehicle on level ground, check that the fluid level in the reservoir is between the upper (MAX) and lower (MIN) level lines.

○Look the fluid level through the hole [A] in the control panel.

★If the fluid level is lower than the lower level line, check for fluid leaks in the brake lines, and fill the reservoir to the upper level line.

⚠ WARNING

Mixing brands and types of brake fluid can reduce the brake system's effectiveness and cause an accident resulting in injury or death. Do not mix two brands of brake fluid. Change the brake fluid in the brake line completely if the brake fluid must be refilled but the type and brand of the brake fluid that is already in the reservoir are unidentified.

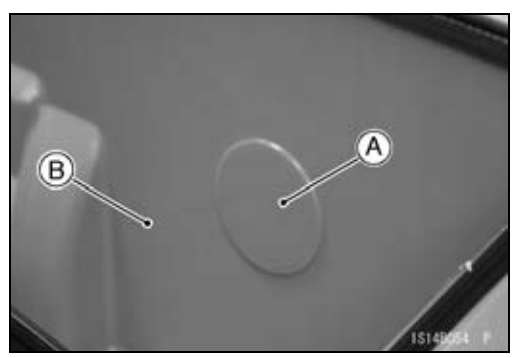

- Tilt up the front cargo hood.
- Remove:
  Rubber Cap [A]
  Front Cargo Compartment [B]

- Fill the reservoir to the upper level line [A].
  Upper Level Line (MAX)
  Lower Level Line (MIN) [B]
- Apply the brake forcefully for a few seconds and check for fluid leakage around the fittings.

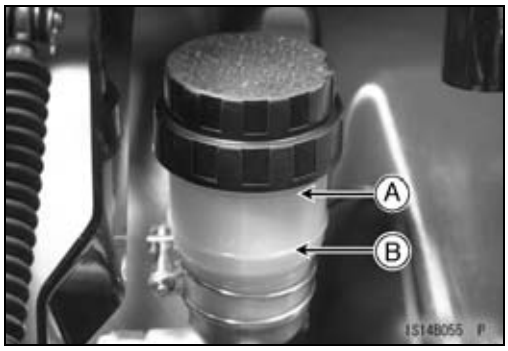

⚠ WARNING

Air in the brake lines diminish braking performance and can cause an accident resulting in injury or death. If the brake pedal has a soft or "spongy" feeling mushy when it is applied, there might be air in the brake lines or the brake may be defective. Do not operate the vehicle and service the brake system immediately.

Brake Fluid Change

- Tilt up the front cargo hood.
- Remove:
  Rubber Cap
  Brake Fluid Reservoir Cap
- Level the brake fluid reservoir [A].

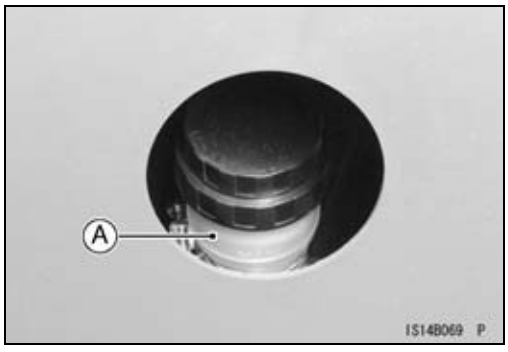

NOTE

○*The fluid level must be checked several times during the fluid changing and replenished as necessary. If the fluid in the reservoir runs completely out any time during fluid changing, air bleeding must be done since air will have entered the line.*

- Remove the wheel for extra clearance (see Wheels/Tires chapter).
- Remove the rubber cap from the bleed valve on the wheel cylinder.
- Connect a clear plastic hose [A] to the bleed valve at the wheel cylinder, running the other end of the hose into a container.
  Brake Panel [B]

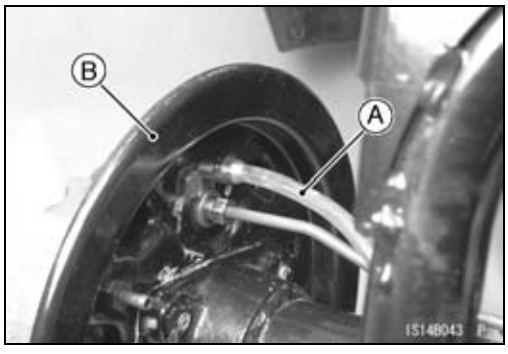

NOTE

○*Start with the rear left or right wheel and finish with the front left or right wheel.*

Periodic Maintenance Procedures

- Fill the reservoir with new brake fluid.
- Temporarily install the reservoir cap.
- Change the brake fluid as follows:
  1. Open bleed valve.
  2. Pump brake pedal and hold it.
  3. Close bleed valve.
  4. Release brake pedal.
- Tighten:

  Torque - Bleed Valves: 8.0 N·m (0.82 kgf·m, 71 in·lb)
- Repeat the previous step for each wheel.
- When brake fluid changing is finished, add the fluid to the upper level in the reservoir.
- After changing the fluid, check the brake for good braking power, no brake drag, and no fluid leakage.

★If necessary, bleed the air from the brake lines (see Brakes chapter).

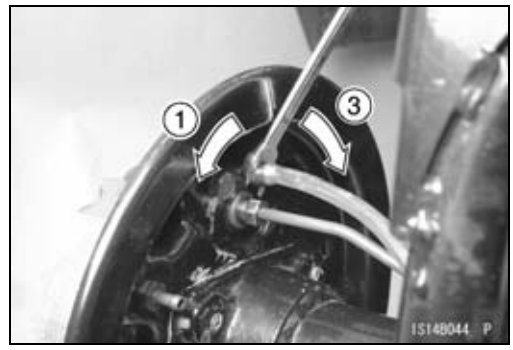

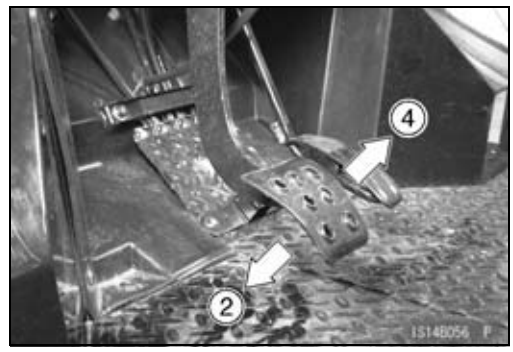

⚠ WARNING

Air in the brake lines diminish braking performance and can cause an accident resulting in injury or death. If the brake pedal has a soft or "spongy" feeling mushy when it is applied, there might be air in the brake lines or the brake may be defective. Do not operate the vehicle and service the brake system immediately.

- Install the removed parts.

  Torque - Master Cylinder Reservoir Cap: 3.4 N·m (0.35 kgf·m, 30 in·lb)

Brake Pedal Play Inspection

- Check brake pedal free play [A].

  Brake Pedal Free Play
  Standard: 2 ~ 5 mm (0.08 ~ 0.20 in.)

★If free play is not correct, adjust it.

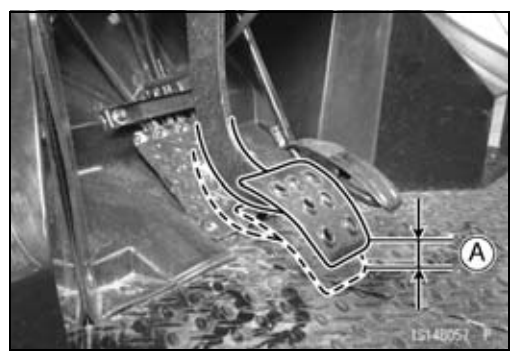

- Remove the front cargo compartment (see Frame chapter).
- Loosen the locknut [A] and turn the push rod [B] to obtain the correct amount of free play.
- Tighten:

  Torque - Push Rod Locknut: 18 N·m (1.8 kgf·m, 13 ft·lb)
- Check the brake for good braking power and no brake drag.

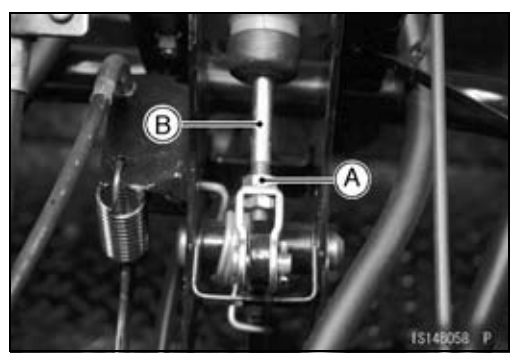

⚠ WARNING

Insufficient free play can cause brake heating and drag, resulting in skidding and loss of control which could cause an accident resulting in serious injury or death. Be sure the brake free play is adjusted to the specification.

Brake Master Cylinder Cup and Dust Cover Replacement

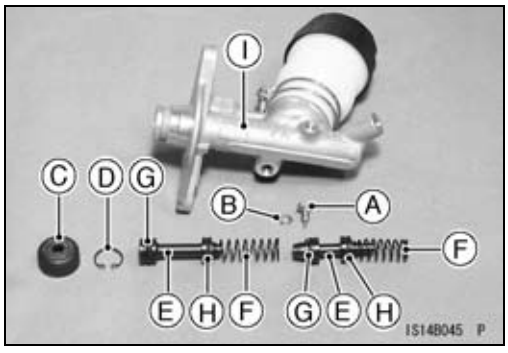

- Remove the master cylinder (see Master Cylinder Removal in the Brakes chapter).
- Remove the piston stop bolt [A] and washer [B].
- Remove the dust cover [C] and then the retainer [D] with the circlip pliers.

Special Tool - Inside Circlip Pliers: 57001-143

○Remove the piston assembly (two pistons) by lightly tap the master cylinder on a wooden block.
Pistons [E]
Springs [F]
Secondary Cup [G]
Primary Cup [H]
Master Cylinder [I]

○Be careful of the secondary cup [A] direction [B].

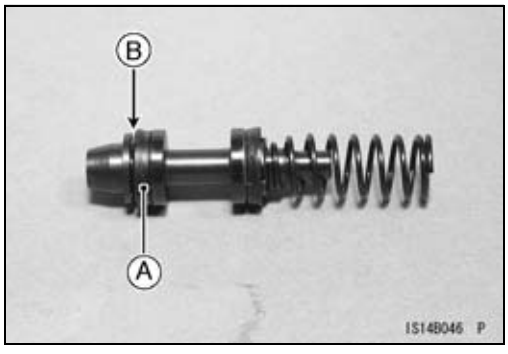

- Assemble the master cylinder:

○Clean all the parts including the master cylinder with brake fluid or alcohol, and apply brake fluid to the removed parts and the inner wall of the cylinder.

NOTICE
Use only brake fluid, isopropyl alcohol, or ethyl alcohol for cleaning brake parts. Do not use any other fluid for cleaning these parts. Gasoline, motor oil, or any other petroleum distillate will cause deterioration of the rubber parts. Oil spilled on any part will be difficult to wash off completely, and will eventually deteriorate the rubber used in the brake.

○Push the piston assembly in all the way with a screwdriver and install the piston stop bolt. Use a new aluminum washer.

○Tighten:

Torque - Piston Stop Bolt: 8.8 N·m (0.90 kgf·m, 78 in·lb)
Reservoir Clamp Bolt: 6.2 N·m (0.63 kgf·m, 55 in·lb)

- Install the master cylinder (see Master Cylinder Installation in the Brakes chapter).

Periodic Maintenance Procedures

Brake Hose and Pipe Inspection

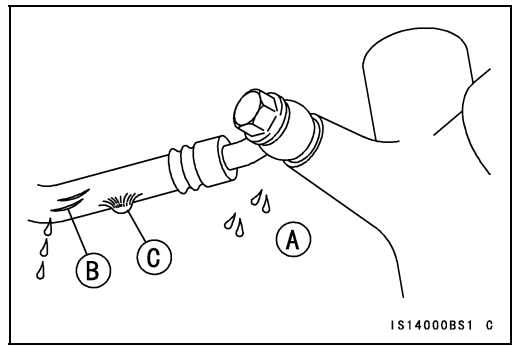

- The high pressure inside the brake line can cause fluid to leak [A] or the hose to burst if the line is not properly maintained. Bend and twist the rubber hose while examining it.

★Replace it if any cracks [B] or bulges [C] are noticed.

- The metal pipe will rust if the plating is damaged.

★Replace the pipe if it is rusted, cracked (especially check the fittings), or if the plating is badly scratched (see Brake Hose and Pipe Replacement in this section).

Brake Hose and Pipe Replacement

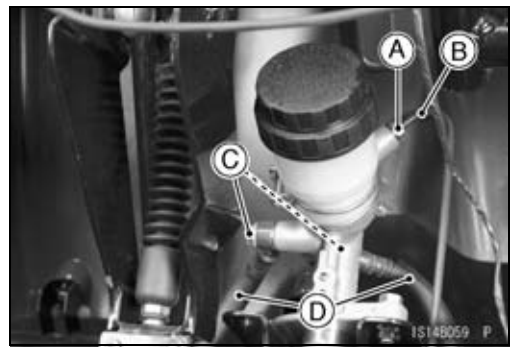

- Remove:
  - Front Cargo Compartment (see Frame chapter)
  - Left and Right Side Cover (see Frame chapter)
  - Floor Center Panel (see Frame chapter)
  - Wheels (see Wheels/Tires chapter)
- Drain the brake fluid.
- Remove:
  - Nipple [A] and Brake Pipe [B]
  - Banjo Bolts [C] and Brake Hose [D]
- Immediately wipe up any brake fluid that spills.

NOTICE
Brake fluid quickly ruins painted surfaces; any spilled fluid should be completely wiped up immediately.

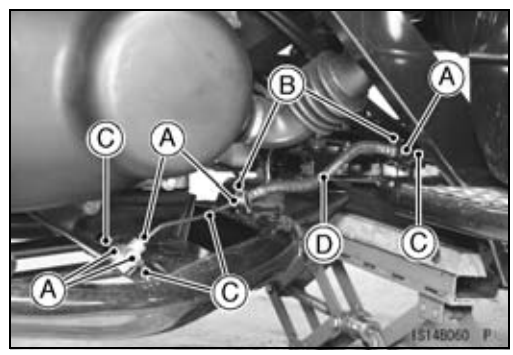

- Remove:
  - Nipples [A]
  - Retainers [B]
  - Brake Pipes [C]
  - Brake Hose [D]

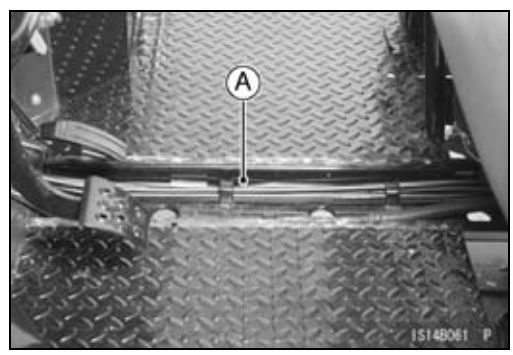

- Remove:
  - Brake Pipe [A]

- Remove:
  Wheels
  Nipple [A]
  Retainer
  Brake Pipe [B]

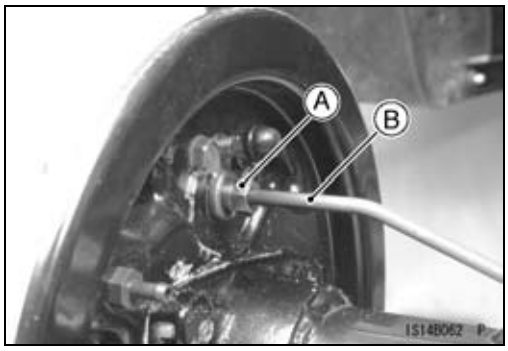

- Use new copper washers [A] for each side of the hose fittings at the master cylinder.
- Tighten:

  Torque - Brake Hose Banjo Bolts [B]: 25 N·m (2.5 kgf·m, 18 ft·lb)

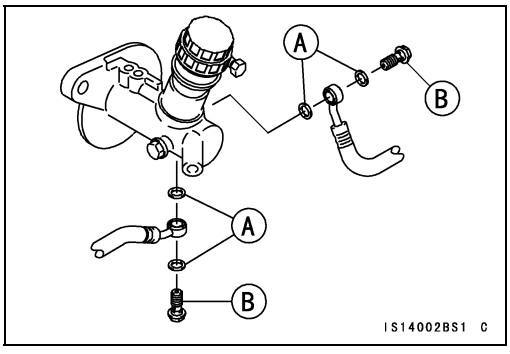

- Install the brake pipe [A] and tighten the nipple [B].

  Torque - Brake Pipe Nipple: 18 N·m (1.8 kgf·m. 13 ft·lb)
- Fill the reservoir with new brake fluid (see Brake Fluid Change).
- Check that the brake line has proper fluid pressure and no fluid leakage.
- Install the removed parts.

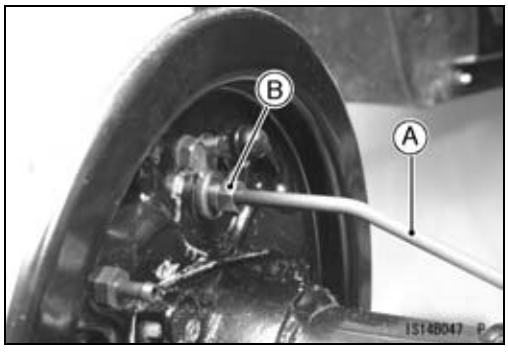

Brake Wheel Cylinder Assembly Replacement

- Remove:
  Brake Drum (see Brake Drum Removal in the Brakes chapter.)
- Remove the brake shoe spring [A] and brake shoes [B] individually.

○Push the shoe hold-down springs [C] and twist the pins [D] to remove the shoes.

NOTE

○*Wrap the brake shoes with a clean cloth to protect the linings from grease or dirt.*

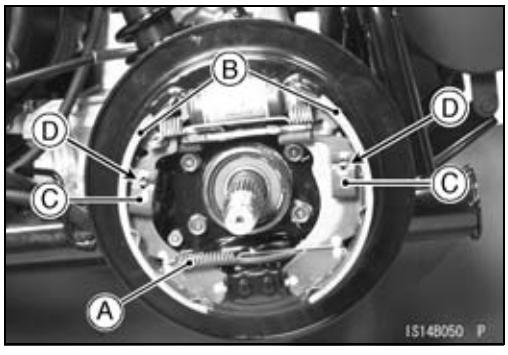

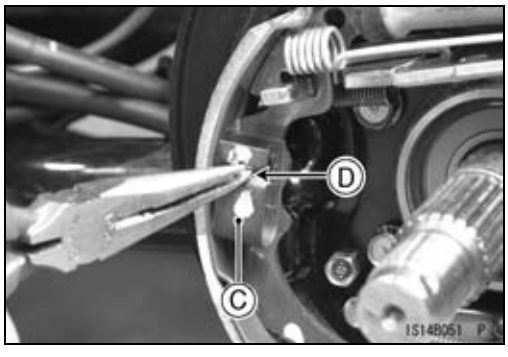

Periodic Maintenance Procedures

- Remove the brake pipe nipple [A] and plug the nipple.

○Immediately wipe up any brake fluid that spills.

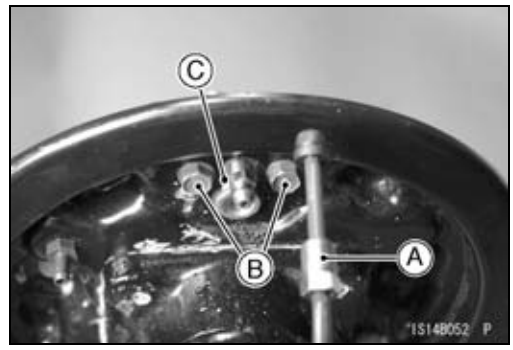

NOTICE
Brake fluid quickly ruins painted surfaces; any spilled fluid should be completely wiped up immediately.

- Unscrew the mounting bolts [B] and take off the front brake wheel cylinder [C].

- Replace the rear wheel cylinder with a new one.
- Apply liquid gasket to the hatched area [A].

Sealant - ThreeBond 1109 (~ KAF400A9/B9/C9)

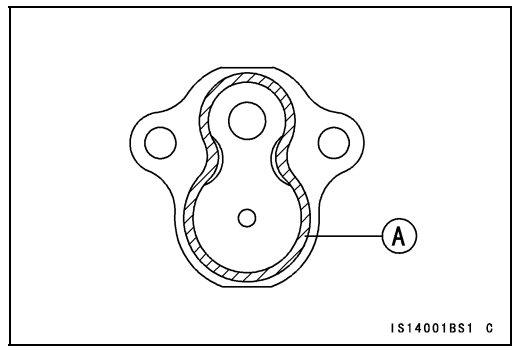

- Apply liquid gasket to the hatched area [A].

Sealant - ThreeBond 1109M (KAF400AA/BA/CA ~)

○Do not apply sealant to the threads of the wheel cylinder.

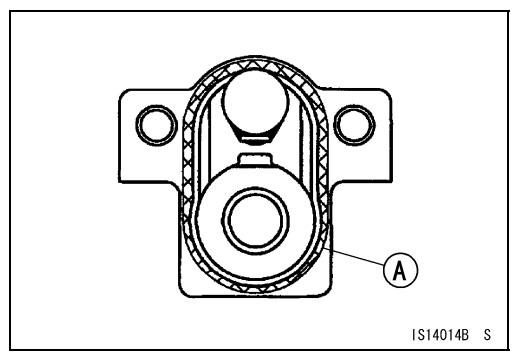

- Tighten:

Torque - Wheel Cylinder Mounting Bolts: 12 N·m (1.2 kgf·m, 106 in·lb)
Brake Pipe Nipple: 18 N·m (1.8 kgf·m, 13 ft·lb)

- Install the removed parts (see Brake Panel Assembly section in the brakes chapter).
- Bleed the brake line after drum installation (see Brake Line Air Bleeding in the Brakes chapter).
- Be sure to check the brake system for good braking power, no brake drag and no fluid leakage.

⚠ WARNING
After servicing, it takes several applications of the brake pedal before the brake shoes contact the drum, which could result in increased stopping distance and cause an accident resulting in injury or death. Do not attempt to ride the vehicle until a firm brake pedal is obtained by pumping the pedal until the shoes are against the drum.

- Adjust:
  Parking Brake Lever (see Parking Brake Lever Inspection in this section)

Periodic Maintenance Procedures

Brake Wear Inspection

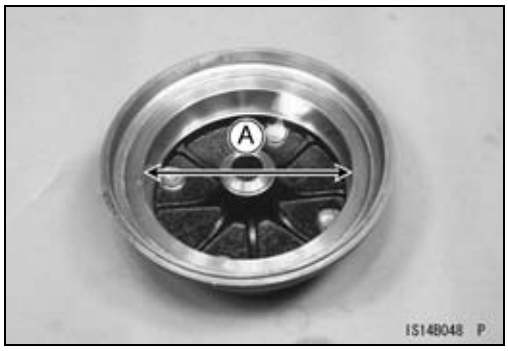

- Remove the brake drum (see Brake Drum Removal in the Brakes chapter).
- Measure the inside diameter [A] of the drum at several points.

★If any measurement is greater than the service limit, replace the drum.

★If the drum is worn unevenly or scored, lightly turn the drum on a brake drum lathe or replace it. Do not turn the drum beyond the service limit.

Brake Drum Inside Diameter

Standard:	**165.00 ~ 165.16 mm (6.4961 ~ 6.5023 in.)**
Service Limit:	**165.75 mm (6.526 in.)**

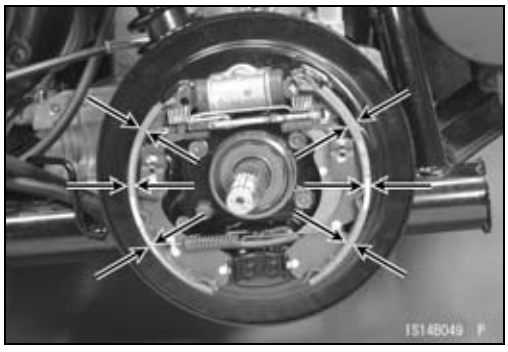

- Remove the brake drum for brake shoe inspection (see Brake Drum Removal in the Brakes chapter).
- Measure the lining thickness at several points.

Brake Shoe Lining thickness

Standard:	**4 mm (0.16 in.)**
Service Limit:	**1 mm (0.04 in.)**

★If any measurement is less than the service limit, replace both shoes as a set.

★If the lining thickness is greater than the service limit, do the following before installing the shoes.

- File or sand down any high spots on the surface on the lining.
- Use a wire brush to remove any foreign particles from the lining.
- Wash off any oil or grease with an oilless solvent.

NOTICE
Do not use a solvent which will leave an oily residue or the shoes will have to be replaced.

Parking Brake Lever Inspection

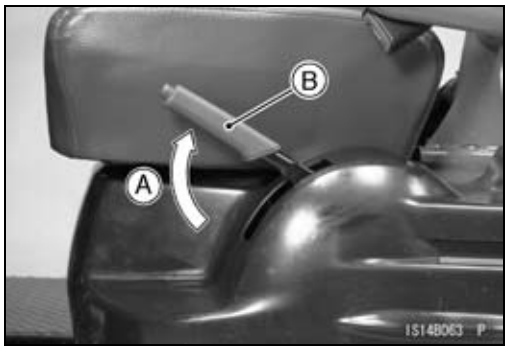

- Check parking brake lever travel [A] by feeling clicks.

○Pull the parking brake lever [B] upward slowly all the way. Count the number of notches (clicks) during lever travel.

○The vehicle should not roll while parked.

Parking Brake Lever Travel

Standard:	**8 ~ 12 notches (clicks)**

- Release the parking brake and return the lever to its rest position.

Periodic Maintenance Procedures

★If the lever travel is not correct, adjust it.
- Loosen the locknut [A] and turn the adjusting nut [B] to obtain the correct amount of lever travel.
- Tighten the locknut.
- Check the parking brake for good braking power and when released, no brake drag.

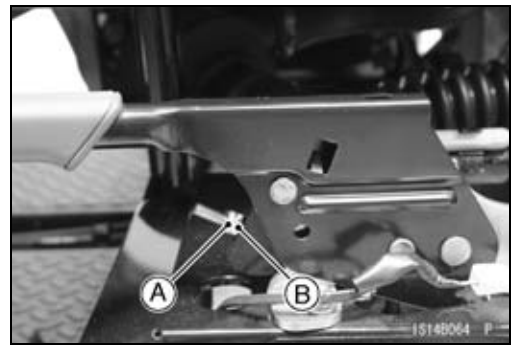

⚠ WARNING

Insufficient free play can cause brake heating and drag, resulting in skidding and loss of control which could cause an accident resulting in serious injury or death. Be sure the brake free play is adjusted to the specification.

NOTE

○*If the parking brake lever travel cannot be adjusted with the adjusting nut at the lever, use the adjusters [A] behind the parking brake lever. Be sure to adjust both the left and right cables evenly, and then securely tighten the adjuster mounting nuts [B].*

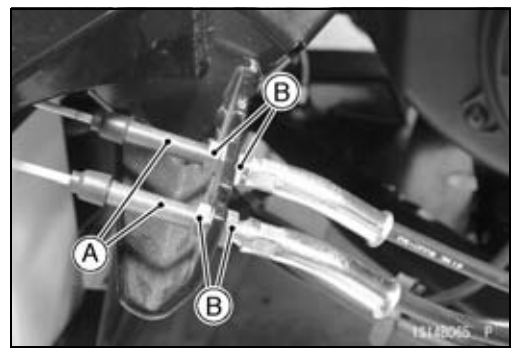

Steering

Steering Inspection

- Check steering wheel free play [A].

○Set the front wheels straight ahead. Gently turn [B] the steering wheel left and right. The steering wheel free play is the amount of travel in the steering wheel, before the front wheels begin to turn.

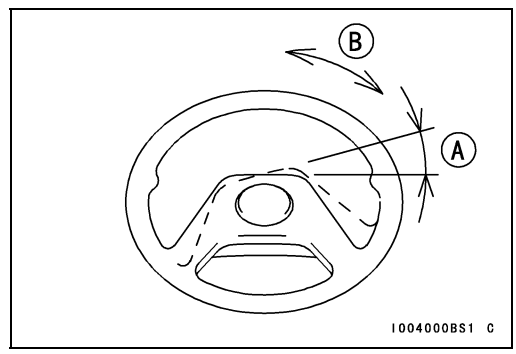

Steering Wheel Free Play
Standard: 0 ~ 20 mm (0 ~ 0.79 in.)

★If steering wheel free play is not correct, inspect the following:
Steering Wheel Mounting Nut (see Steering chapter)
Intermediate Shaft Clamp Bolts (see Steering chapter)
Steering Gear Assembly Mounting Bracket Bolts (see Steering chapter)
Steering Gear Assembly Mounting Rubber Dampers
Tie-rod End Nuts (see Wheels/Tires chapter)
Steering Gear Preload Adjustment (see Steering chapter)

★If the inspections above are good but the free play is out of the specified, the steering gear assembly is damaged and should be replaced as a unit.

Steering Joint Dust Boot Inspection

- Visually inspect the dust boots [A] at both the ends of the steering gear assembly.

★If there is any signs of deterioration, cracks, or damage, replace the steering gear assembly together with these boots.

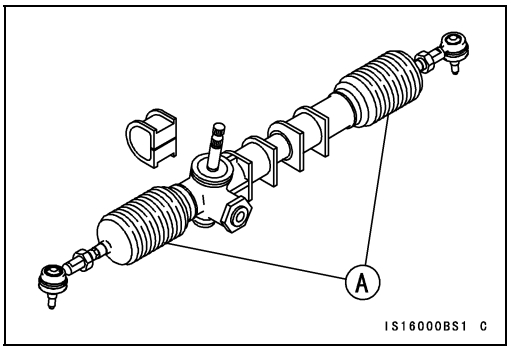

Frame

Seat Belt Inspection

- Check the belt [A] for damage or tear.

★If necessary, replace the belt with a new one.

- Check the tightness torque of the seat belt mounting bolts [B].

Torque - Seat Belt Mounting Bolts: 34 N·m (3.5 kgf·m, 25 ft·lb)

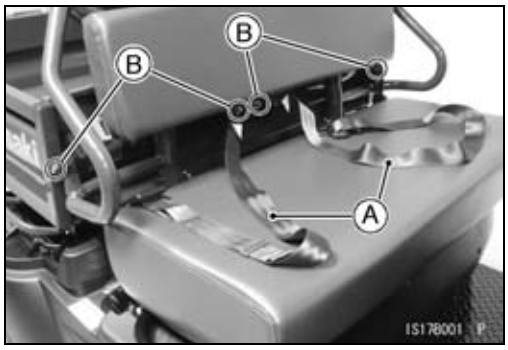

- Check the operation of the buckle [A].

○Set the plate [B] in the buckle, and confirm the plate does not come off when pulling it.

○Set the plate in the buckle, and confirm the plate comes off when the buckle button [C] is pushed.

★If operation is not correct, visually inspect the plate.

★If the plate is damaged, replace the plate assembly with a new one.

★If the plate is not damaged, replace the buckle assembly.

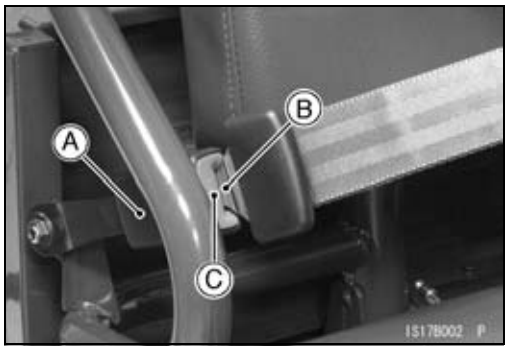

Electrical System

Battery Inspection

Electrolyte Level

- The electrolyte level should be between the upper and lower level lines [A].

★If the level of electrolyte in any cell is below the lower level line, add only distilled water to the cell, until the level is at the upper level line.

NOTICE
Ordinary tap water is not a substitute for distilled water and will shorten the life of the battery.

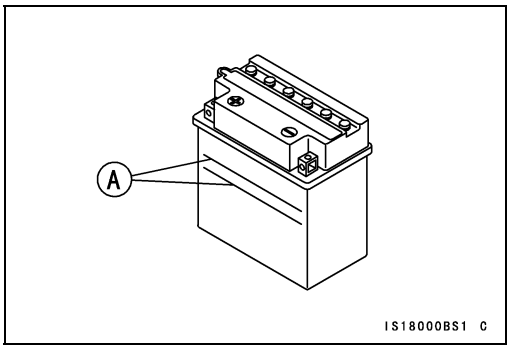

Periodic Maintenance Procedures

Electrolyte Specific Gravity

⚠ WARNING

Electrolyte contains sulfuric acid which is harmful to skin, eyes, and clothing.
Wear eye protection and rubber gloves.
If spillage occurs on body or clothing, rinse at once with water for at least 15 minutes.

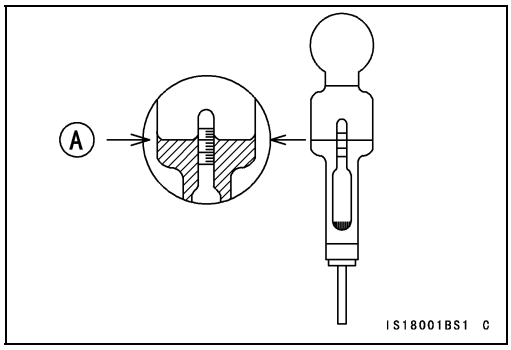

- Check battery condition by testing the specific gravity of the electrolyte in each cell with a hydrometer.

○Read the level of the electrolyte [A] on the floating scale.

Specific Gravity
Standard: 1.270 @20°C (68°F)

★If the specific gravity is below 1.200 (charge 70%), the battery needs to be charged.

NOTE

○*The specific gravity of the electrolyte varies with changes in temperature, so the specific gravity reading must be corrected for the temperature of the electrolyte.*
○*Celsius: Add 0.007 points to reading for each 10°C above 20°C or subtract 0.007 points for each 10°C below 20°C*
○*Fahrenheit: Add 0.004 points to reading for each 10°F above 68°F or subtract 0.004 points for each 10°F below 68°F.*

★If the specific gravity of any of the cells is more than 0.050 away from any other reading, the battery will probably not accept a charge. It is generally best to replace a battery in this condition.
★If the specific gravity of all the cells is 1.270 or more, the battery is fully charged.

Brake Light Switch Inspection

- Check the operation of the brake light switch by depressing the brake pedal. The brake light should go on after 10 mm (0.4 in.) of pedal travel [A].

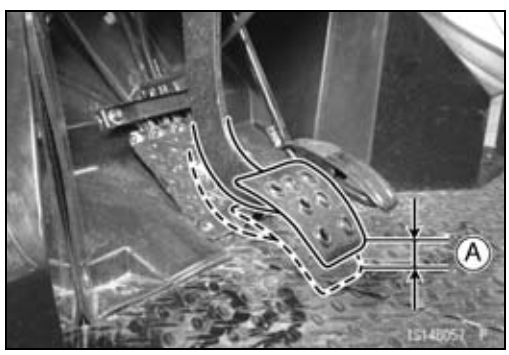

★If it does not, adjust the brake light switch [A] up or down. To change the switch position, turn the adjusting nut [B].

Brake Light Switch Timing
Standard: ON after 10 mm (0.39 in.) of pedal travel

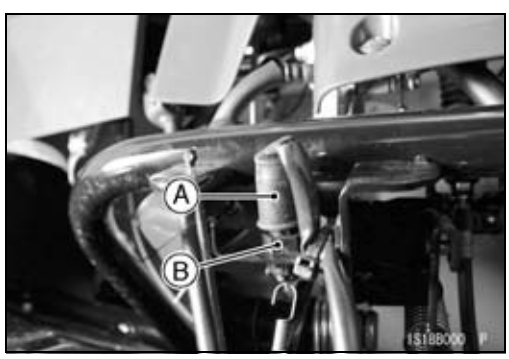

NOTICE

To avoid damaging the electrical connections inside the switch, be sure that the switch body does not turn during adjustment.

Periodic Maintenance Procedures

General Lubrication

- Before lubricating each part, clean off any rusty spots with rust remover and wipe off any grease, oil, dirt, or grime.
- Lubricate the points listed below with indicated lubricant.

NOTE

○*Whenever the vehicle has been operated under wet or rainy conditions, or especially after using a high-pressure spray water, perform the general lubrication.*

Pivots and Points: Lubricate with Grease.

Seat Brackets
Cargo Bed Mounting Pins
Throttle Pedal Pivot
Brake Pedal Pivot
Transmission Shift Control Lever Pivot
Differential Shift Cable Upper End
2WD/4WD Shift Lever Pivot (KAF400-A/C)

Cables: Lubricate with Cable Lubricant

Throttle Cable
Differential Shift Cable
2WD/4WD Shift Cable (KAF400-A/C)

- Lubricate the cables by seeping the oil between the cable and housing.

○The cable may be lubricated by using a pressure cable lubricator with an aerosol cable lubricant.

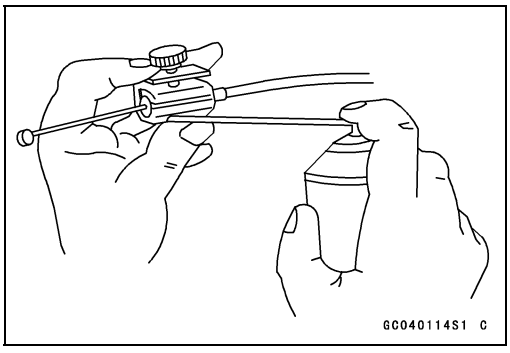

Cables: Lubricate with Motor Oil.

Parking Brake Cables

- With the cable disconnect at both ends, the cable should move freely [A] within the cable housing.

★If cable movement is not free after lubricating, if the cable is frayed [B], or if the cable housing is kinked [C], replace the cable.

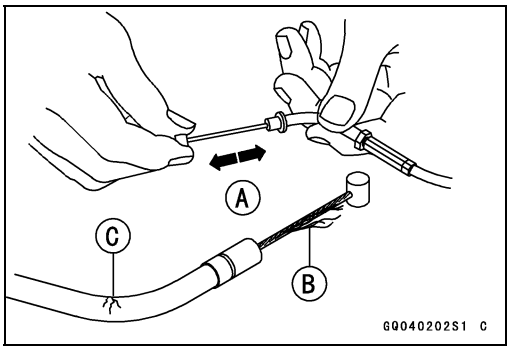

Periodic Maintenance Procedures

Bolts, Nuts, and Fasteners

Tightness Inspection

- Check the tightness of the bolts and nuts listed here. Also, check to see that each cotter pin is in place and in good condition.

NOTE

○*Check the engine fastener tightness when the engine is cold (at room temperature).*

★If there are loose fasteners, first loosen by 1/2 turn, then retorque them to the specified torque following the specified tightening sequence. Refer to the appropriate chapter for torque specifications. If torque specifications are not in the appropriate chapter, see the basic torque table (see Torque and Locking Agent in this chapter).

★If cotter pins are damaged or removed, replace them with new ones.

Nut, Bolt, and Fasteners to be checked

Engine

Engine Mounting Bolts
Exhaust Pipe Holder Nuts
Exhaust Pipe and Muffler Clamp Bolt
Muffler Mounting Bolts
Throttle Pedal Pivot Clip
Fuel Tank Holder Nuts

Transmission/Final Drive

Axle Nuts and Cotter Pins
Drive Shaft Bracket Mounting Nuts
Transmission Shift Cable Upper End Clip
Transmission Shift Lever Clamp Bolt
Differential Shift Lever Pivot Clip
Differential Shift Cable Upper End Clip
Differential Shift Lever Mounting Nut
Front Final Gear Case Mounting Nuts (KAF400-A/C)
Front Final Gear Case Bracket Bolts (KAF400-A/C)
Propeller Shaft Bearing Mounting Nuts (KAF400-A/C)
2WD/4WD Shift Lever Pivot Clip (KAF400-A/C)
2WD/4WD Shift Lever Mounting Nut (KAF400-A/C)
Transmission Shift Lever Pivot Clip
Transmission Shift Cable Upper End Clip
Transmission Shift Lever Mounting Nut

Wheels

Wheel Nuts

Brakes

Master Cylinder Mounting Bolts
Master Cylinder Push Rod Clevis Pin Clip
Parking Brake Lever Assembly Mounting Bolts
Brake Pedal Pivot Shaft Cotter Pin

Suspension

Suspension Arm Pivot Bolts
Strut Mounting Nuts
Strut Clamp Nuts and Cotter Pins
Shock Absorber Mounting Nuts
Swingarm Joint Nut
Swingarm Rod Bolts
Swingarm Connecting Wire Bolts

Periodic Maintenance Procedures

Steering

- Steering Wheel Mounting Nut
- Intermediate Shaft Clamp Bolts
- Tie-rod End Nuts and Cotter Pins
- Tie-rod End Locknuts
- Steering Knucle Pivot Nuts
- Steering Gear Assembly Mounting Bolts
- Suspension Arm Joint Nuts and Cotter Pins
- Main Shaft Mounting Bolts and Nuts

Frame

- Front and Rear Bar Mounting Bolts and Nuts
- Front Guard Mounting Nuts
- Cargo Bed Hook Mounting Bolts
- Cargo Bed Mounting Pin Clips
- Screen Mounting Nuts
- Seat Bracket Nuts and Bolts
- Seat Back Mounting Nuts
- Seat Belt Mounting Bolts
- Battery Holder Nuts

Fuel System

Table of Contents

Exploded View 3-2
Specifications 3-6
Throttle Pedal and Cable 3-7
Throttle Pedal Free Play Inspection 3-7
Throttle Pedal Free Play Adjustment 3-7
Full Throttle Pedal Position Adjustment 3-7
Throttle Cable Installation 3-7
Throttle Cable Lubrication 3-7
Throttle Cable Inspection 3-7
Governor Link Mechanism 3-8
Control Panel Assembly Removal 3-8
Control Panel Assembly Installation 3-8
Governor Assembly Removal 3-12
Governor Assembly Installation ... 3-12
Governor Assembly Inspection 3-12
Choke Cable 3-13
Choke Knob Free Play Inspection 3-13
Choke Knob Free Play Adjustment 3-13
Choke Cable Installation 3-13
Choke Cable Lubrication 3-13
Choke Cable Inspection 3-14
Carburetor 3-15
Idle Speed Inspection 3-15
Idle Speed Adjustment 3-15
Fuel System Cleanliness Inspection 3-15
Carburetor Removal 3-15
Carburetor Installation 3-16
Carburetor Disassembly 3-16
Carburetor Assembly 3-18
Carburetor Cleaning 3-19
Carburetor Inspection 3-20
Pilot Screw Setting 3-20
Air Cleaner 3-22
Air Cleaner Element Removal 3-22
Air Cleaner Element Installation ... 3-22
Air Cleaner Element Cleaning 3-22
Air Cleaner Housing Removal 3-23
Air Cleaner Housing Installation ... 3-23
Air Cleaner Housing Dust and/or Water Installation 3-23
Fuel Pump 3-24
Fuel Pump Removal 3-24
Fuel Pump Installation 3-24
Fuel Pump Inspection 3-25
Fuel Filter 3-26
Fuel Filter Removal 3-26
Fuel Filter Installation 3-26
Fuel Filter Inspection 3-26
Fuel Tank 3-27
Fuel Tank Removal 3-27
Fuel Tank Installation 3-27
Fuel Tank Cleaning/Inspection 3-29
Evaporative Emission Control System (CAL Model, US and CA Models of the KAF400AB ~/BB ~) 3-30
Parts Removal/Installation 3-30
Hose Inspection 3-30
Canister Inspection 3-30

Exploded View

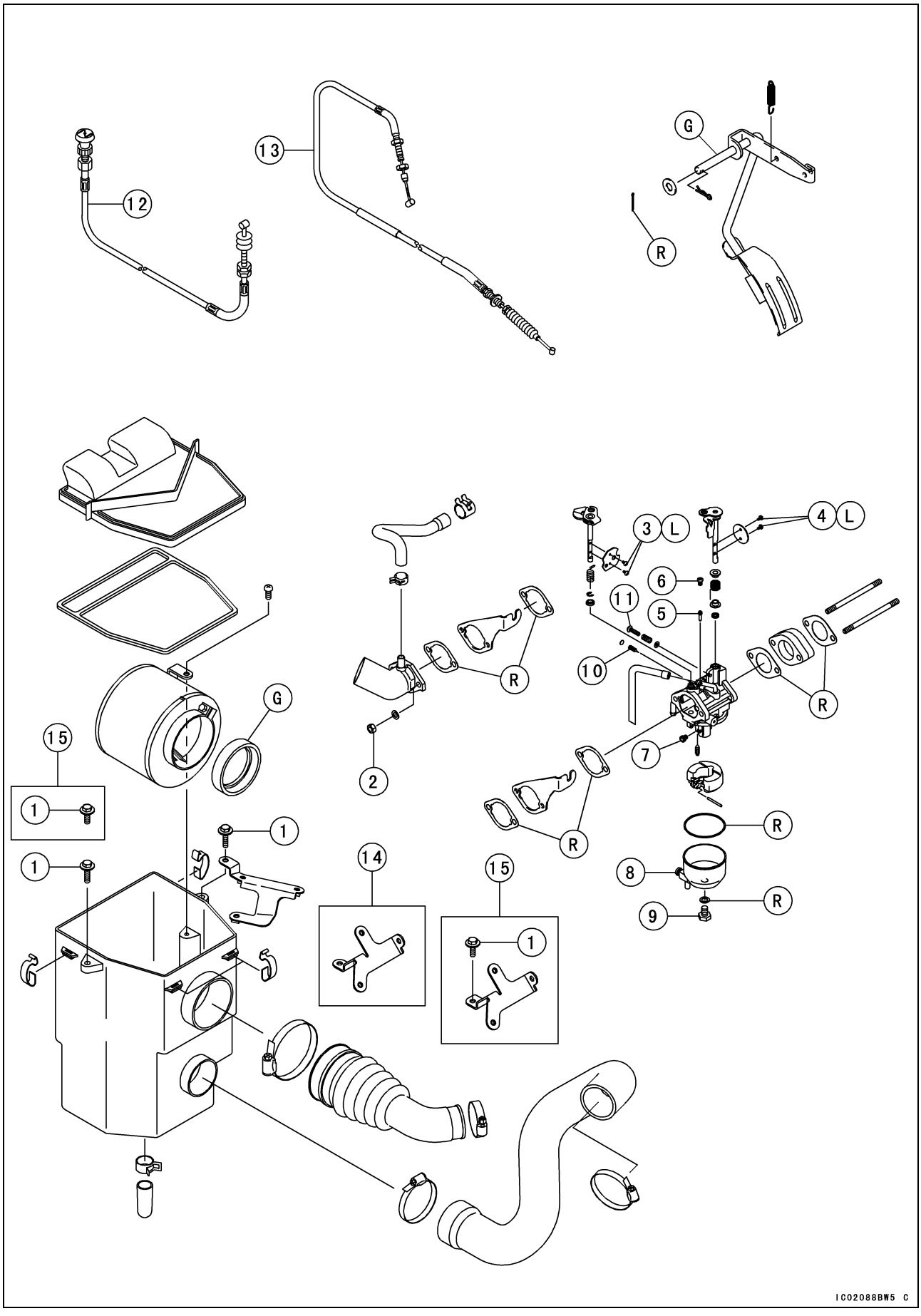

Exploded View

No.	Fastener	Torque			Remarks
		N·m	kgf·m	ft·lb	
1	Air Cleaner Housing Bolts (~ KAF400AA/~ BA/~ CA)	17	1.7	12	
	Air Cleaner Housing Bolts (KAF400AB ~/BB ~)	5.4	0.55	48 in·lb	
2	Carburetor Mounting Nuts	6.9	0.70	61 in·lb	
3	Choke Valve Screws	0.90	0.09	7.8 in·lb	L
4	Throttle Valve Screws	0.90	0.09	7.8 in·lb	L
5	Pilot Jet	0.70	0.07	6.1 in·lb	
6	Pilot Jet Plug	2.5	0.25	22 in·lb	
7	Main Jet	2.0	0.20	17 in·lb	
8	Drain Screw	2.0	0.20	17 in·lb	
9	Float Chamber Bolt	9.8	1.0	87 in·lb	

10. Pilot Screw
11. Idle Adjustung Screw
12. Choke Cable
13. Throttle Cable
14. KAF400AB ~ AE/BB ~ BE Early Models
15. KAF400AE/BE Late Models ~

G: Apply grease.
L: Apply a non-permanent locking agent.
R: Replacement Parts

Exploded View

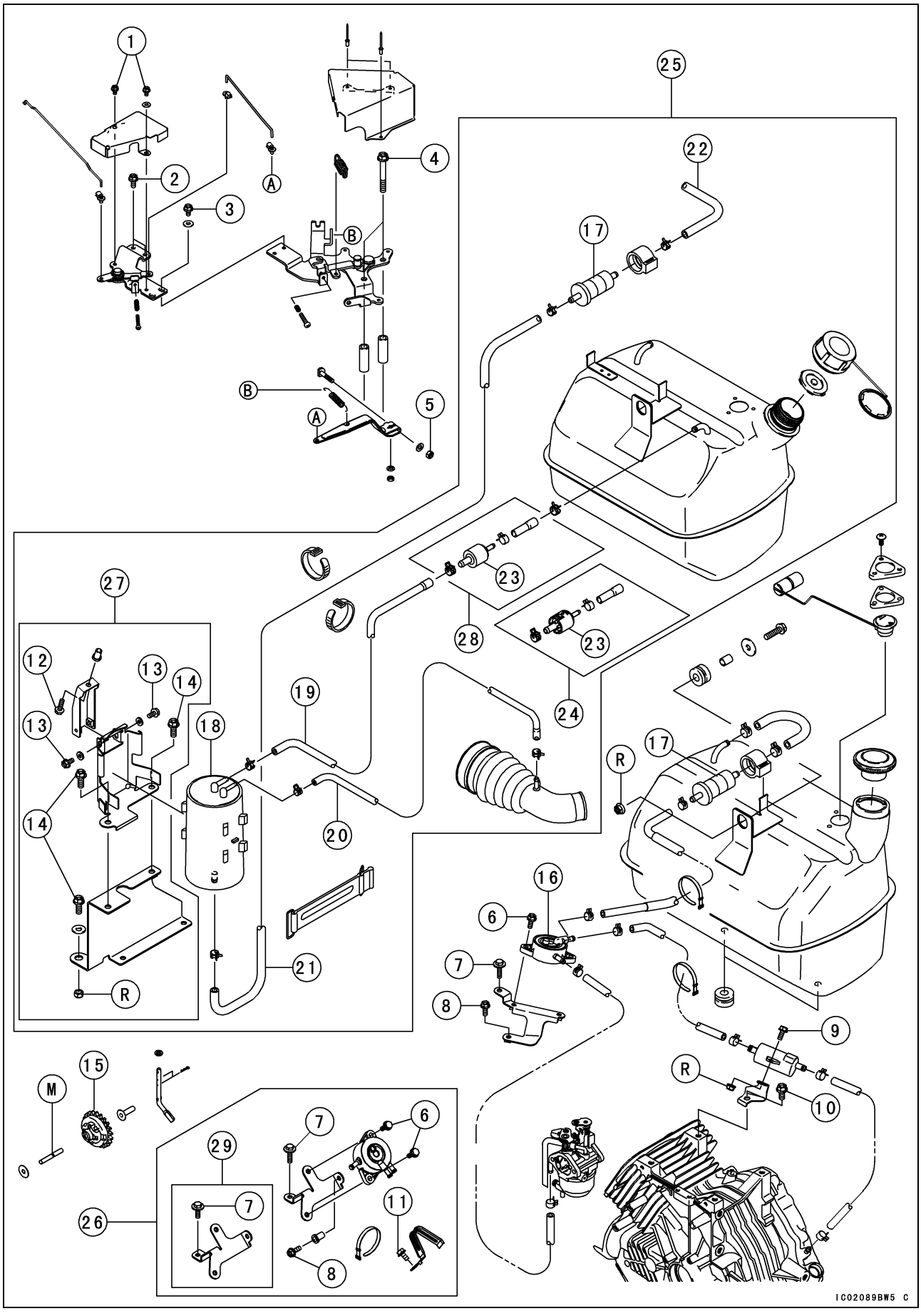

Exploded View

No.	Fastener	Torque			Remarks
		N·m	kgf·m	ft·lb	
1	Panel Cover Bolts	4.4	0.45	39 in·lb	
2	Control Panel Bolt	8.8	0.90	78 in·lb	
3	Plate Connection Bolts	8.8	0.90	78 in·lb	
4	Control Panel Mounting Bolts	20	2.0	14	
5	Governor Arm Nut	7.4	0.75	65 in·lb	
6	Fuel Pump Mounting Bolts	5.4	0.55	48 in·lb	
7	Air Cleaner Housing Bolts (~ KAF400AA/~ BA/~ CA)	17	1.7	12	
	Air Cleaner Housing Bolts (KAF400AB ~/BB ~)	5.4	0.55	48 in·lb	
8	Fuel Pump Bracket Bolt	5.4	0.55	48 in·lb	
9	Breather Mounting Bolt	8.8	0.90	78 in·lb	
10	Breather Bracket Bolt	15	1.5	11	
11	Breather Hose Clamp Mounting Bolt	5.5	0.56	48 in·lb	
12	Canister Bracket Bolt (L = 18)	5.4	0.55	48 in·lb	
13	Canister Bracket Bolts (L = 12)	8.8	0.90	78 in·lb	
14	Canister Bracket Bolts (L = 20)	19.6	2.0	14	

15. Governor
16. Fuel Pump
17. Fuel Filter
18. Canister
19. Fuel Hose (Fuel Tank ~ Canister)
20. Fuel Hose (Canister ~ Air Cleaner Duct)
21. Fuel Hose (Canister ~ Fuel Filter)
22. Fuel Hose
23. Check Valve
24. KAF400A9 ~ AC/B9 ~ BC/C9 ~ CA
25. CAL Model, US and CA Models of the KAF400AB ~/BB ~
26. KAF400AB ~/BB ~
27. CAL Model, US and CA Models of the KAF400AB/BB
28. KAF400AD ~/BD ~
29. KAF400AE/BE Late Models ~

M: Apply molybdenum desulfide grease.
R: Replacement Parts

Specifications

Item	Standard	Service Limit
Throttle Pedal and Cable		
Throttle Pedal Free Play	2 ~ 5 mm (0.08 ~ 0.20 in.)	– – –
Choke Cable		
Choke Knob Free Play	0 ~ 1 mm (0 ~ 0.04 in.)	– – –
Carburetor		
Idle Speed	about 1 100 ~ 1 250 r/min (rpm)	– – –
Carburetor Specifications:		
Make/Type	NIKKI 6C1026	– – –
Main Jet	#112	– – –
Pilot Jet (Slow Jet)	#54	– – –
Pilot Screw (turns out)	3 3/8	– – –
Optional Parts:		
Main Jet:		
*Altitude:		
0 ~ 500 m (0 ~ 1 600 ft)	#112 (92063-7045)	– – –
500 ~ 1 500 m (1 600 ~ 4 900 ft)	#109 (92063-7044)	– – –
1 500 ~ 2 500 m (4 900 ~ 8 200 ft)	#105 (92063-7013)	– – –
2 500 ~ 3 500 m (8 200 ~ 11 500 ft)	#102 (92063-7014)	– – –
3 500 ~ 4 500 m (11 500 ~ 14 800 ft)	#99 (92063-2458)	– – –

*: Refer to page 5-29 for high altitude setting in the converter system.

Throttle Pedal and Cable

Throttle Pedal Free Play Inspection

- Refer to the Throttle Pedal Free Play Inspection in the Periodic Maintenance chapter.

Throttle Pedal Free Play Adjustment

- Refer to the Throttle Pedal Free Play Adjustment in the Periodic Maintenance chapter.

Full Throttle Pedal Position Adjustment

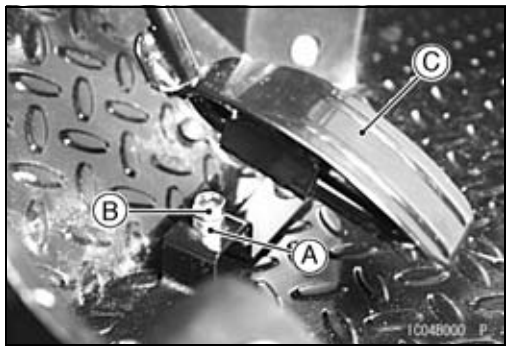

- Loosen the locknut [A].
- Screw in the throttle pedal stop bolt [B].
- Depress the throttle pedal [C] until the throttle lever on the carburetor is in the fully opened position, and keep its position.
- Turn the throttle pedal stop bolt until the bolt head lightly touches the bottom of the throttle pedal.
- Tighten the locknut securely.

Throttle Cable Installation

- Lubricate the throttle cable before installation.
- Route the throttle cable correctly (see Appendix chapter).
- Adjust:
  Throttle Pedal Free Play Adjustment

⚠ WARNING

Operation with incorrectly routed or improperly adjusted cable could result in an unsafe riding condition. Be sure the cable is routed correctly and properly adjusted.

Throttle Cable Lubrication

- Whenever the throttle cable is removed or in accordance with the Periodic Maintenance Chart in the Periodic Maintenance chapter, lubricate the cable.
- Refer to the General Lubrication in the Periodic Maintenance chapter.

Throttle Cable Inspection

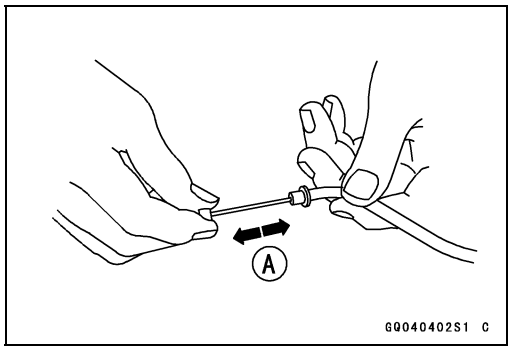

- With the throttle cable disconnected at both ends, the cable should move freely [A] within the cable housing.

★If the cable does not move freely after lubricating, if the cable is frayed, or if the housing is kinked, replace the cable.

Governor Link Mechanism

Control Panel Assembly Removal

- Tilt up the cargo bed.
- Drill out the pop rivets [A] holding the control panel assembly shroud [B] with a drill bit of the 5 mm (0.02 in.) diameter.

○Drill only until the rivet head comes off. Do not drill through the hole.

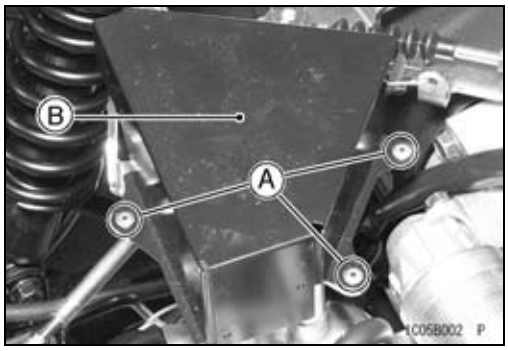

- Remove:
  Link [A]
  Governor Spring [B]
  Plate Connection Bolts [C]
  Control Panel Mounting Bolts [D]
  Control Panel Assembly [E]

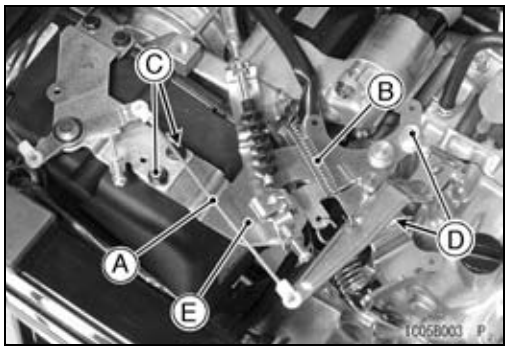

Control Panel Assembly Installation

- Install:
  Control Panel Assembly
- Tighten:

Torque - Control Panel Mounting Bolts: 20 N·m (2.0 kgf·m, 14 ft·lb)
Plate Connection Bolts: 8.8 N·m (0.90 kgf·m, 78 in·lb)

- Insert the bushing [A] in the hole of the governor arm with click [B].

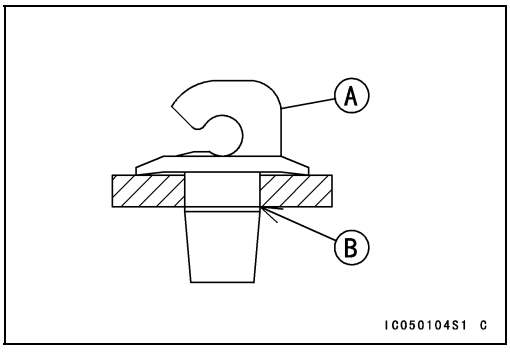

- Insert the link [A] in the hole of the bushing [B] from upper side.

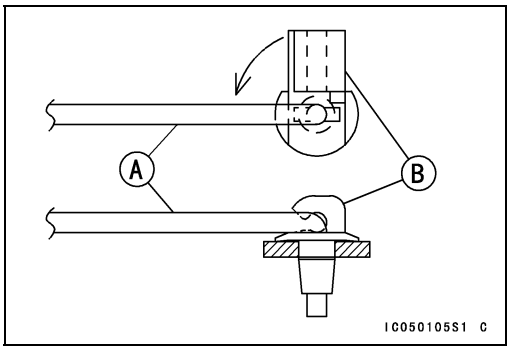

Governor Link Mechanism

- Turn the bushing [A] counterclockwise until fitting on the link with click [B].

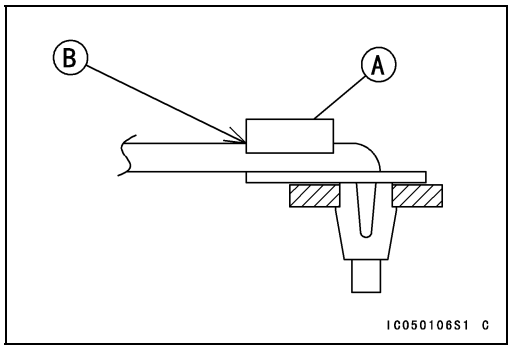

- Hold the carburetor throttle full open [A], tighten the governor arm nut [B] with pivot arm [C] and governor arm [D] are turned fully clockwise.
  Short Straight Side [E]

○Insert a suitable rod in the hole [F] on the pivot arm, and turn the pivot arm.
  Snap Pins [G]

- Tighten:

Torque - Governor Arm Nut: 7.4 N·m (0.75 kgf·m, 65 in·lb)

NOTE

○*Do not transform the governor arm.*

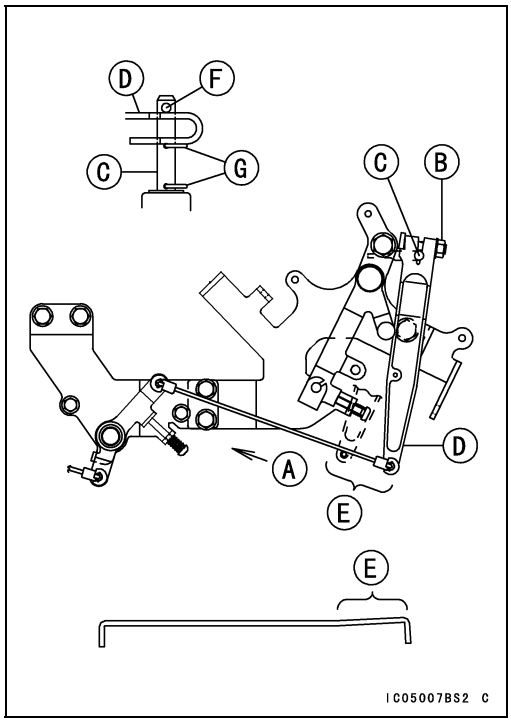

- Install:
  Governor Spring [A]
  Return Spring [B]

○Hook the return spring from upside.

- Install:
  Throttle Cable [C]
- Temporarily tighten the throttle cable mounting nuts [D].
  View X [E]

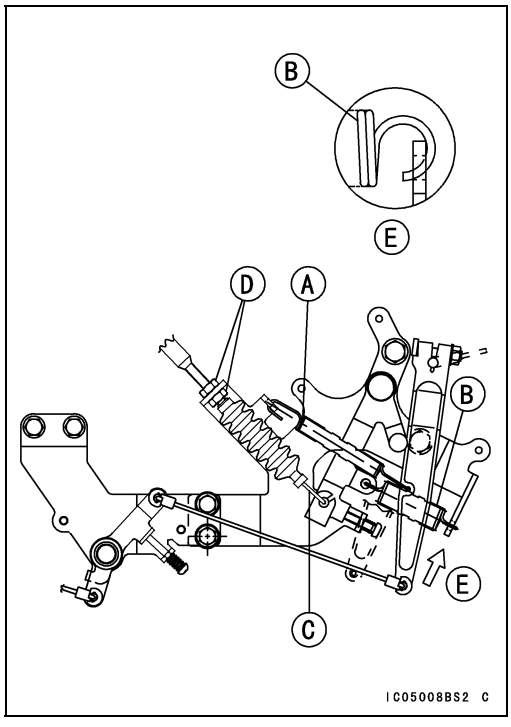

Governor Link Mechanism

- Screw in the accel lever stopper screw [A] until it keeps clearance by 1 mm (0.04 in.) [B] to the accel lever [C] at idle speed position.

  Idle Speed
  about 1 100 ~ 1 250 r/min (rpm)

- Tighten the throttle cable mounting nuts [D].

○In this case, do not extend the cable too much.
○The idle screw [E] must contact to link lever [F].

- Check that the governor arm [G] and accel lever pin [H] touch lightly, when the throttle lever (throttle pedal) is fully opened.
- When the throttle pedal is fully pushed, make sure that the carburetor throttle is in fully opened position.

★If it is not in fully opened position, adjust the play of the throttle pedal and accel lever stopper screw to get the fully opened position of the carburetor throttle.

- Adjust:
  Throttle Pedal Free Play Adjustment
  Idle Speed Adjustment
- Install the control panel assembly shroud with pop rivets.

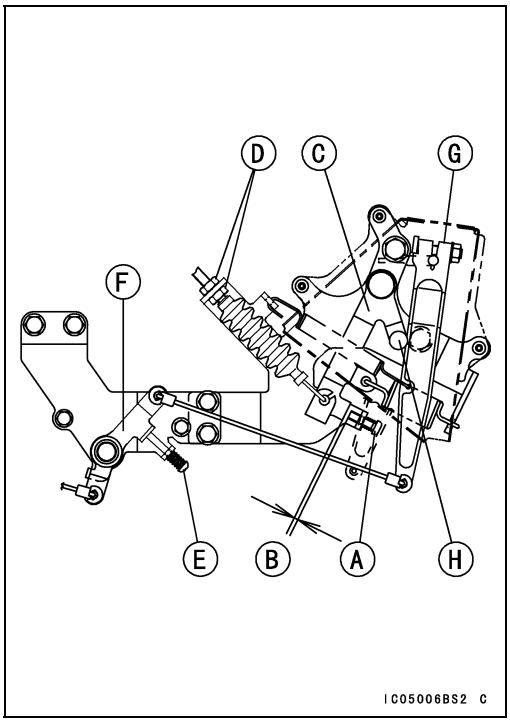

Governor Link Mechanism

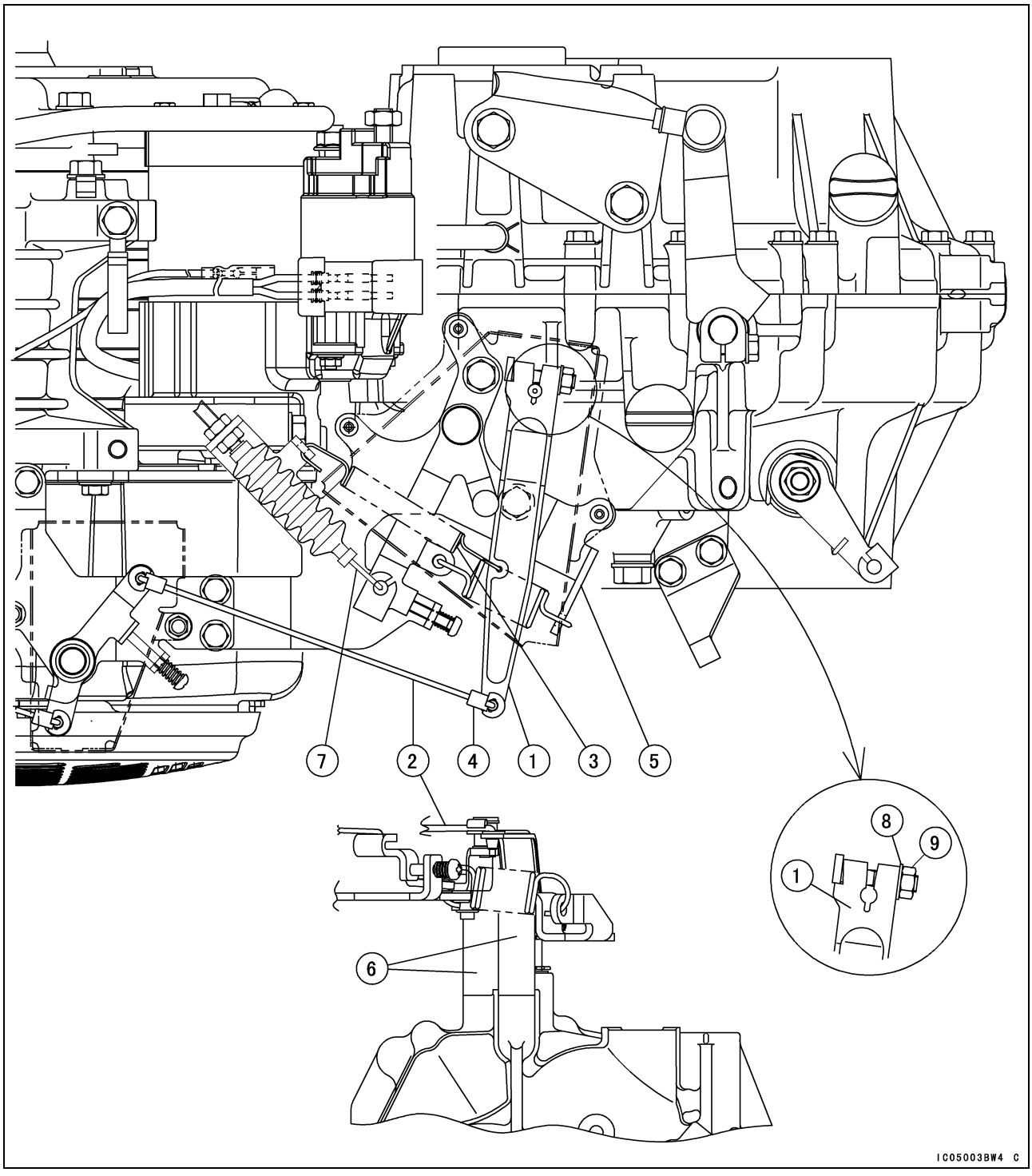

1. Governor Arm
2. Link
3. Governor Spring
4. Bushing
5. Control Panel
6. Collars
7. Throttle Cable
8. Washer
9. Governor Arm Clamp Nut

Governor Link Mechanism

Governor Assembly Removal

- Remove:
  Transmission Case (split)
  Transmission Shafts
  Governor Shaft Snap Pins [A]
  Governor Shaft [B]
  Washer (thin) [C]
  Washer (thick) [D]

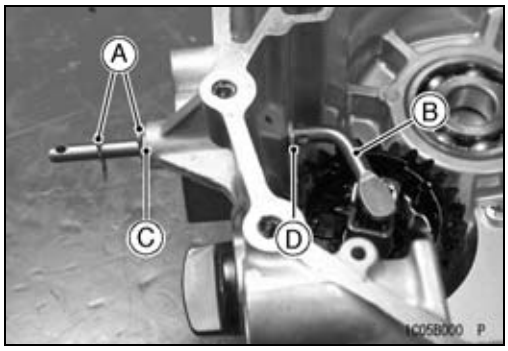

- Remove the governor assembly [A] with the sleeve [B] by prying the gear [C] with two suitable levers.

NOTICE
Do not remove the governor assembly unless it is necessary. Once it has been removed, it must be replaced.

- Remove the washer.

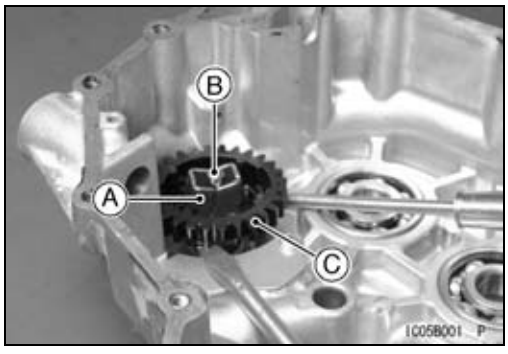

Governor Assembly Installation

- Apply molybdenum disulfide grease to the governor shaft.
- Fit the sleeve into the governor assembly, and install them as a set.

NOTE

○*The sleeve and the governor assembly cannot be installed separately.*
○*Push the set onto the shaft until the step fits into the groove securely.*

Sleeve [A]
Governor Assembly [B]
Step [C]
Washer [D]
Groove [E]
Governor Shaft [F]
32 mm (1.26 in.) [G]

- Check that the gear turns freely and the weights [H] move smoothly.

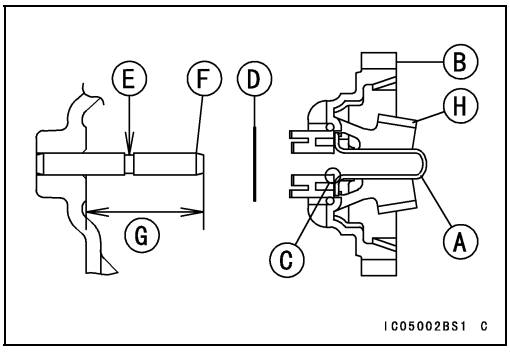

Governor Assembly Inspection

- Visually check the governor assembly [A] for wear and damage.

★If any part is worn or damaged, replace the assembly.

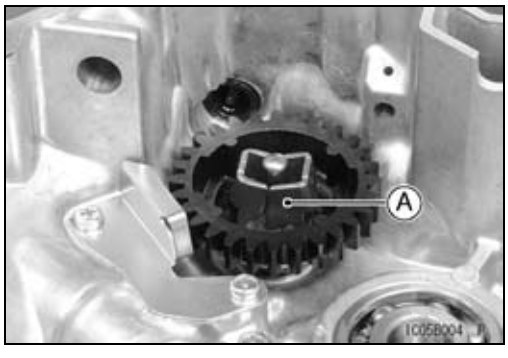

Choke Cable

Choke Knob Free Play Inspection

- Check that the choke knob returns properly and that the inner cable slides smoothly.
- Remove:
  Guard Plate (see Frame chapter)
- Push in the choke knob all the way.
- Check the choke cable free play [A].

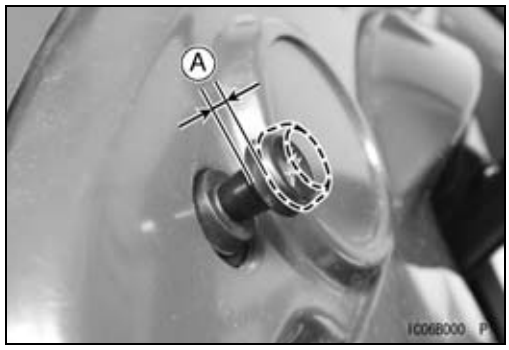

○Determine the amount of free play at the choke knob. Pull the choke knob until the starter lever [A] on the carburetor begins to turn; the amount of choke knob travel is the amount of free play.

★If the free play is not correct, adjust the choke cable.

Choke Knob Free Play
Standard: 0 ~ 1 mm (0 ~ 0.04 in.)

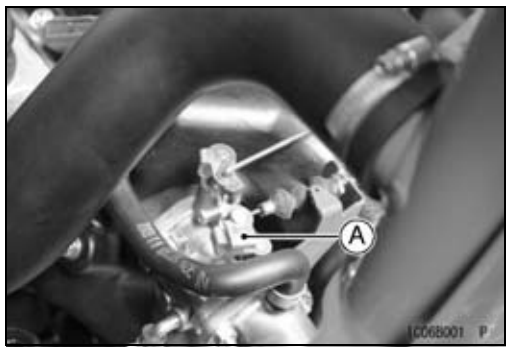

Choke Knob Free Play Adjustment

- Remove:
  Guard Plate (see Frame chapter)
- Loosen the mounting nuts [A] and slide the adjuster [B] until the cable has the proper amount of free play.
- Tighten the mounting nuts securely.

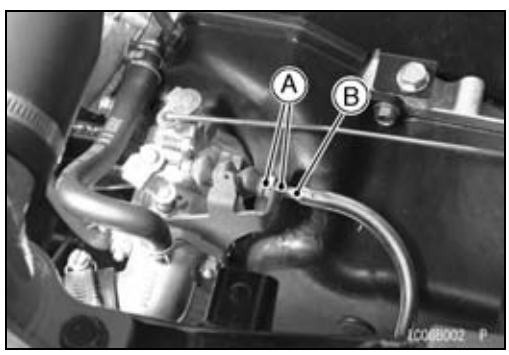

Choke Cable Installation

- Lubricate the throttle cable before installation.
- Route the choke cable correctly (see the Appendix chapter).
- Adjust:
  Choke Cable Free Play Adjustment

⚠ WARNING

Operation with incorrectly routed or improperly adjusted cable could result in an unsafe riding condition. Be sure the cable is routed correctly and properly adjusted.

Choke Cable Lubrication

- Whenever the choke cable is removed or in accordance with the Periodic Maintenance Chart in the Periodic Maintenance chapter, lubricate the cable.
- Refer to the General Lubrication in the Periodic Maintenance chapter.

Choke Cable

Choke Cable Inspection

- With the choke cable disconnected at both ends, the cable should move freely [A] within the cable housing.

★If the cable does not move freely after lubricating, if the cable is frayed, or if the housing is kinked, replace the cable.

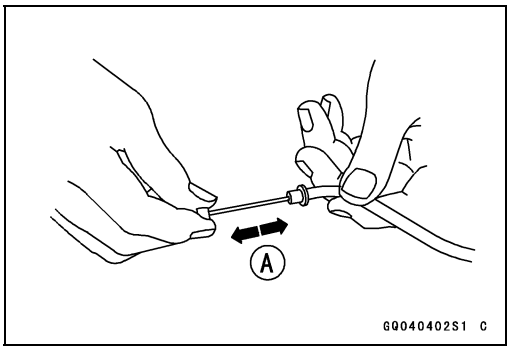

Carburetor

Idle Speed Inspection

- Refer to the Idle Speed Inspection in the Periodic Maintenance chapter.

Idle Speed Adjustment

- Refer to the Idle Speed Adjustment in the Periodic Maintenance chapter.

Fuel System Cleanliness Inspection

- Refer to the Fuel System Cleanliness Inspection in the Periodic Maintenance chapter.

Carburetor Removal

⚠ WARNING

Gasoline is extremely flammable and can be explosive under certain conditions. Turn the ignition switch OFF. Do not smoke. Make sure the area is well-ventilated and free from any source of flame or sparks; this includes any appliance with a pilot light.

- Remove:
  Cargo Bed (tilt up)
  Guard Plate (see Frame chapter)
  Choke Cable Lower End [A]
- Disconnect:
  Breather Hose [B]
  Fuel Hose [C]
- Remove:
  Mounting Nuts [D] and Washers
  Intake Pipe [E]
  Choke Cable Bracket [F]

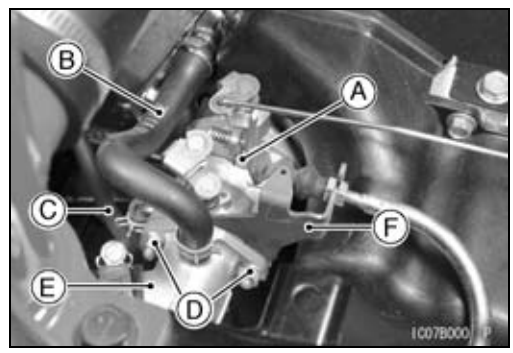

- Remove:
  Carburetor [A]
  Throttle Link [B]

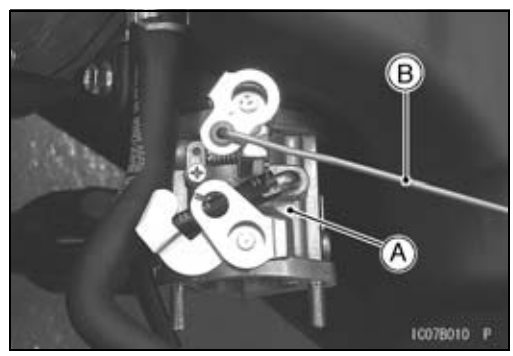

- After removing the carburetor, stuff pieces of lint-free, clean cloth into the carburetor holder and the air cleaner duct to keep dirt out of the engine and air cleaner.

NOTICE

If dirt gets through into the engine, excessive engine wear and possibly engine damage will occur.

Carburetor

Carburetor Installation

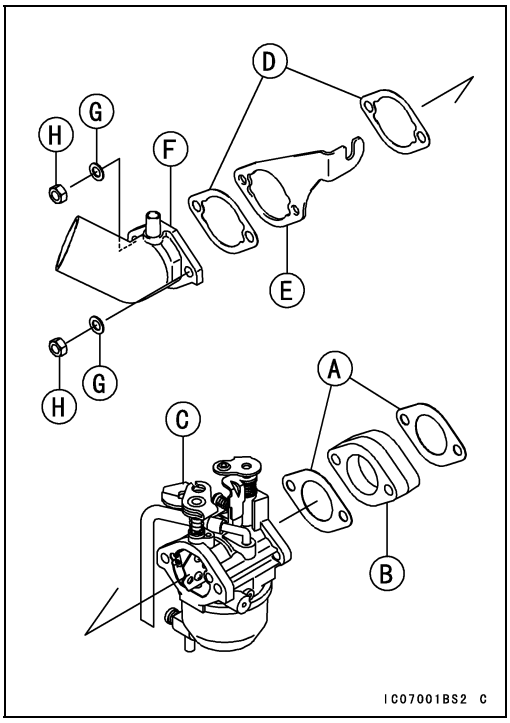

- Install:
  New Gasket [A]
  Insulator [B]
  Carburetor [C]

○When installing the carburetor, install the throttle link.

- Install:
  New Gasket [D]
  Bracket [E] (as shown)
  Intake Pipe [F]
  Washers [G] and Mounting Nuts [H]

Torque - Carburetor Mounting Nuts: 6.9 N·m (0.70 kgf·m, 61 in·lb)

- Install the parts removed.
- Adjust:
  Throttle Pedal Free Play Adjustment
  Choke Cable Free Play Adjustment
  Idle Speed Adjustment

Carburetor Disassembly

⚠ WARNING

Gasoline is extremely flammable and can be explosive under certain conditions. Turn the ignition switch OFF. Do not smoke. Make sure the area is well-ventilated and free from any source of flame or sparks; this includes any appliance with a pilot light.

- Remove:
  Carburetor (see Carburetor Removal)
  Float Chamber Mounting Bolt [A] and Gasket
  Float Chamber [B]

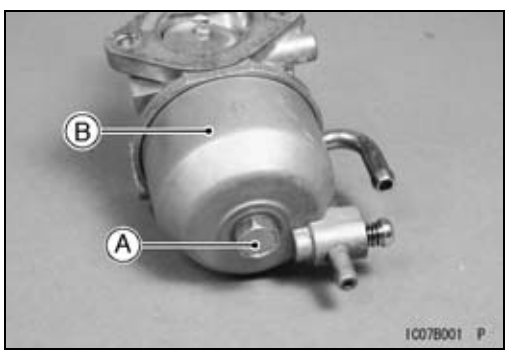

Carburetor

- Remove:
  Pin [A]
  Float [B] and Float Valve Needle

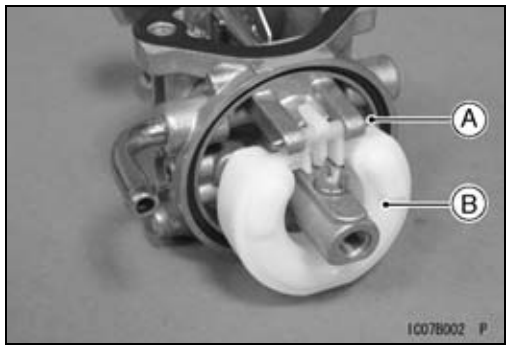

- Remove:
  Main Jet [A]

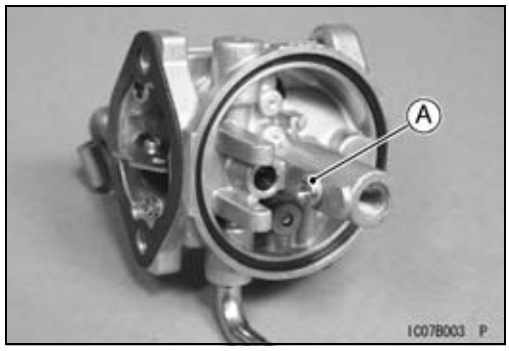

- Remove:
  Pilot Jet Plug [A]

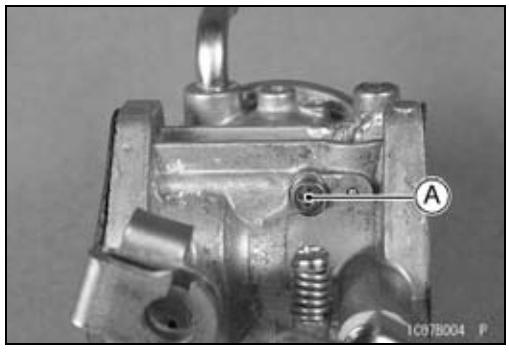

- Remove:
  Pilot Jet [A]

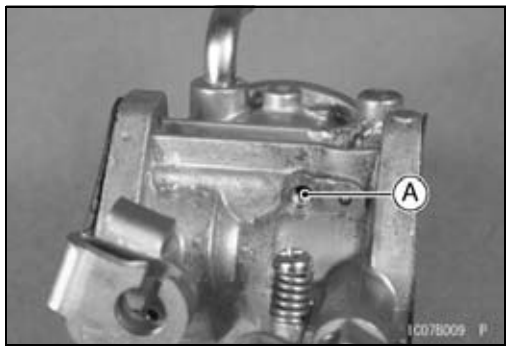

Carburetor

Carburetor Assembly

- Replace the following parts with new ones.
  Circlip [A]
  Cap [B]
  Dust Seal [C]
  Gaskets [D]
- Apply a non-permanent locking agent:
  Choke Valve Screws [E]
  Throttle Valve Screws [F]
- Tighten:

Torque - Choke Valve Screws: 0.90 N·m (0.09 kgf·m, 7.8 in·lb)
Throttle Valve Screws: 0.90 N·m (0.09 kgf·m, 7.8 in·lb)
Pilot Jet [G]: 0.70 N·m (0.07 kgf·m, 6.1 in·lb)
Pilot Jet Plug [H]: 2.5 N·m (0.25 kgf·m, 22 in·lb)
Main Jet [I]: 2.0 N·m (0.20 kgf·m, 17 in·lb)
Drain Screw [J]: 2.0 N·m (0.20 kgf·m, 17 in·lb)
Float Chamber Bolt [K]: 9.8 N·m (1.0 kgf·m, 87 in·lb)

- Install:
  Choke Valve [L]
  Springs [M]
  Anti Tamper Plug [N]
  Idle Adjusting Screw [O]
  Throttle Valve [P]
  Collars [Q]
  Float Valve Needle [R]
  Pin [S] (Insert the pin as shown)
  Float [T]
  Insert Direction [U]
  2.5 mm [V]
  2 mm [W]

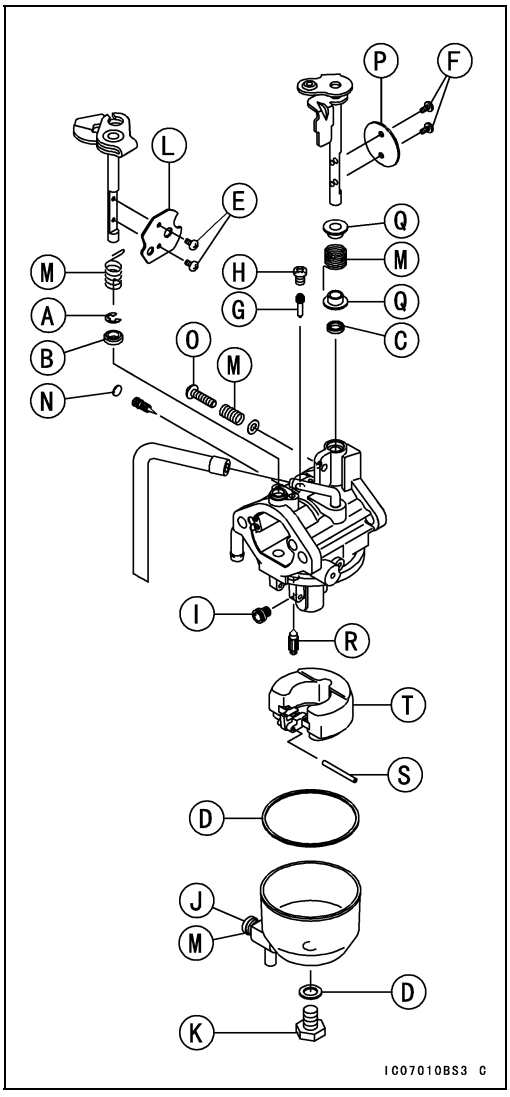

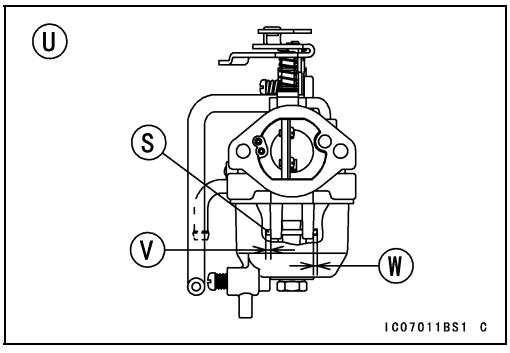

Carburetor

Carburetor Cleaning

⚠ WARNING

Gasoline and low flash-point solvents can be flammable and/or explosive and cause severe burns. Clean the carburetor in a well-ventilated area, and take care that there are no sparks or flame anywhere near the working area; this includes any appliance with a pilot light. Do not use gasoline or a low flash-point solvent to clean the carburetor.

NOTICE

Do not use compressed air on an assembled carburetor, the float may be crushed by the pressure. Remove as many rubber or plastic parts from the carburetor as possible before cleaning the carburetor with a cleaning solution. This will prevent damage or deterioration of the parts. The carburetor body has plastic parts that cannot be removed. Do not use a strong carburetor cleaning solution which could attack these parts; instead, use a mild high flash-point cleaning solution safe for plastic parts. Do not use wire or any other hard instrument to clean carburetor parts, especially jets, as they may be damaged.

- Disassemble the carburetor.
- Immerse all the metal parts in a carburetor cleaning solution.
- Rinse the parts in water.
- When the parts are clean, dry them with compressed air.
- Blow through the air and fuel passages with compressed air.
- Assemble the carburetor.

Carburetor Inspection

⚠ WARNING

Gasoline is extremely flammable and can be explosive under certain conditions. Turn the ignition switch OFF. Do not smoke. Make sure the area is well-ventilated and free from any source of flame or sparks; this includes any appliance with a pilot light.

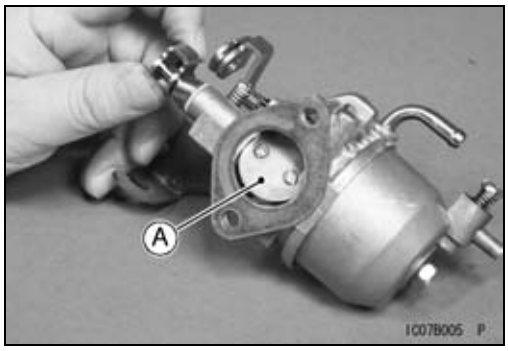

- Turn the throttle and choke shafts to check that the throttle and choke valves move smoothly.
  Throttle Valve [A]
  Choke Valve [B]

★If the valves do not more smoothly, replace the damaged parts.

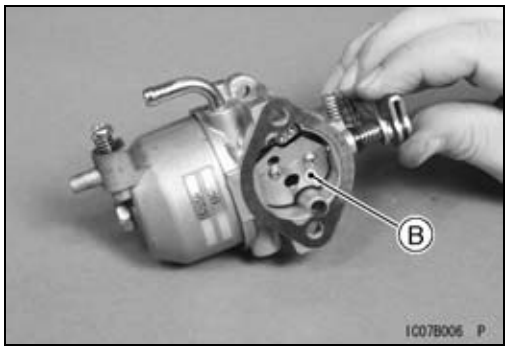

- Check the float [A] for cracks.

★If there are any cracks, replace the float.

NOTE

○*Float height can not be adjusted.*

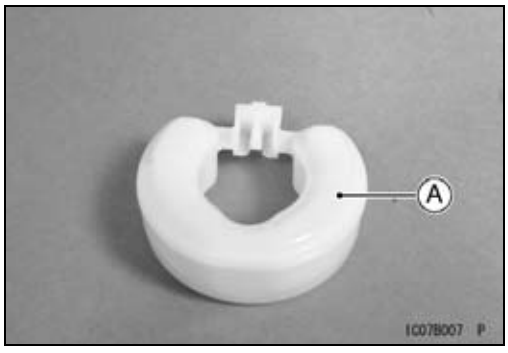

- Check the tip [A] of the float valve needle [B]. It should be smooth, without any grooves, scratches, or tears.

★If the tip is damaged replace the valve needle.

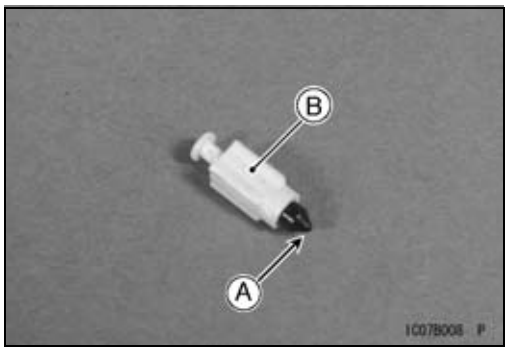

Pilot Screw Setting

NOTICE

Do not turn the pilot screw. You may cause poor running at low engine speed. Do not force or overtighten the pilot screw. It could be damaged requiring replacement.

Carburetor

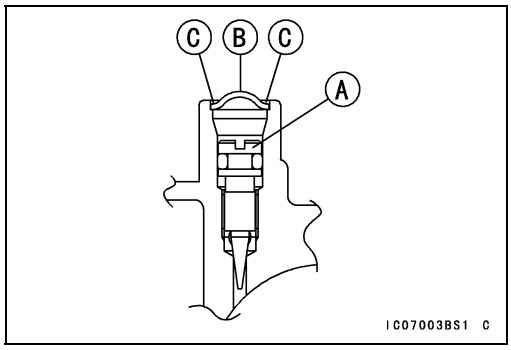

○The pilot screw [A] is set at the factory and should not be adjusted, But if necessary, set the pilot screw as follows:

- Remove:
  Carburetor (see Carburetor Removal)
- Punch a hole in the plug [B] and pry it out with an awl or other suitable tool.
- Turn in the pilot screw and count the number of turns until it seats fully but not tightly.

○Back out the same number of turns counted when turned in. This is to set the screw to its original position.

NOTE

○*A carburetor has different "turns out" of the pilot screw for each individual unit. When setting the pilot screw, use the "turns out" determined during disassembly. Use the specifications in this manual only if the original number is unknown.*

- Remove the pilot screw, and set the pilot screw using a screwdriver.

- Install a new plug in the pilot screw hole of the carburetor body, and apply a little bonding agent [C] to the circumference of the plug to fix the plug.

NOTICE
Do not apply too much bonding agent to the plug or the pilot screw itself may be fixed.

Air Cleaner

Air Cleaner Element Removal

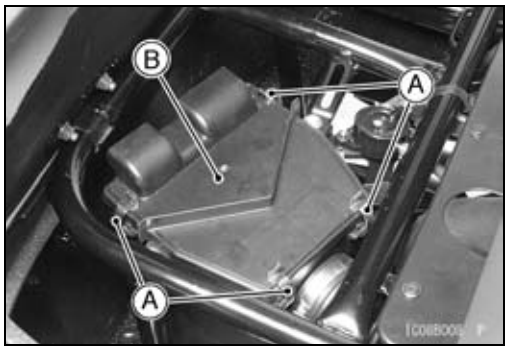

- Tilt up the seat.
- Unhook the clamps [A].
- Remove:
  Air Cleaner Cover [B]

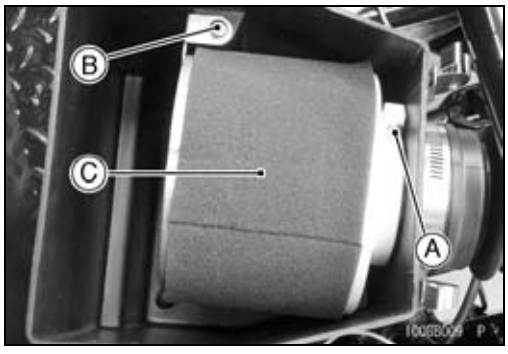

- Loosen:
  Clamp Screw [A]
- Remove:
  Mounting Screw [B]
  Air Cleaner Element [C]
- After removing the element, stuff pieces of lint-free, clean cloth into the air cleaner duct to keep dirt out of the carburetor and engine.

⚠ WARNING

If dirt or dust is allowed to pass through into the carburetor, the throttle may become stuck, possibly causing accident. Replace the air cleaner element according to the maintenance chart.

NOTICE

If dirt gets through into the engine, excessive engine wear and possibly engine damage will occur.

Air Cleaner Element Installation

- Apply grease to the dust seal [A].
- Install the element.
- Tighten:
  Mounting Screw
  Clamp Screw

Air Cleaner Element Cleaning

- Refer to the Air Cleaner Element Cleaning in the Periodic Maintenance chapter.

Air Cleaner

Air Cleaner Housing Removal

● Remove:
Air Cleaner Element (see Air Cleaner Element Removal)
Air Cleaner Ducts [A]

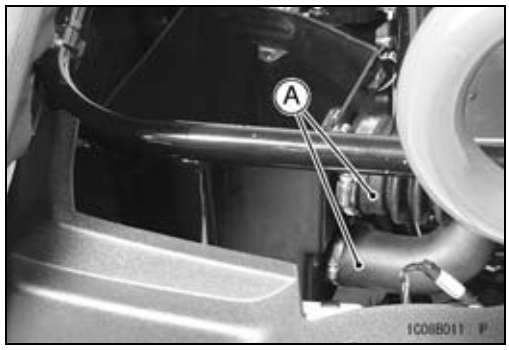

● Remove:
Fuel Pump Bracket Bolt [A]
Air Cleaner Housing Bolts [B]
Air Cleaner Housing [C]

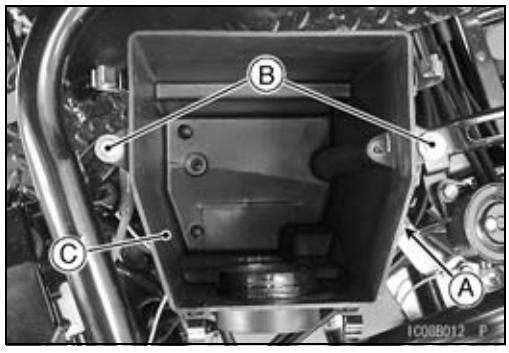

Air Cleaner Housing Installation

● Tighten:

Torque - Air Cleaner Housing Bolts (~ KAF400AA/~ BA/~ CA): 17 N·m (1.7 kgf·m, 12 ft·lb)
Air Cleaner Housing Bolts (KAF400AB ~/BB ~): 5.4 N·m (0.55 kgf·m, 48 in·lb)
Fuel Pump Bracket Bolt: 5.4 N·m (0.55 kgf·m, 48 in·lb)

● Install the air cleaner ducts and tighten the clamps.

Air Cleaner Housing Dust and/or Water Installation

★If you see any dust and/or water accumulated in the housing, remove the drain cap [A] at the bottom of the air cleaner housing [B] and expel it.
[C] Clamp

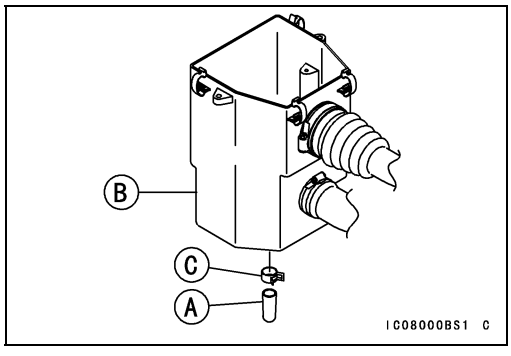

Fuel Pump

Fuel Pump Removal

⚠ WARNING

Gasoline is extremely flammable and can be explosive under certain conditions. Turn the ignition switch OFF. Do not smoke. Make sure the area is well-ventilated and free from any source of flame or sparks; this includes any appliance with a pilot light.

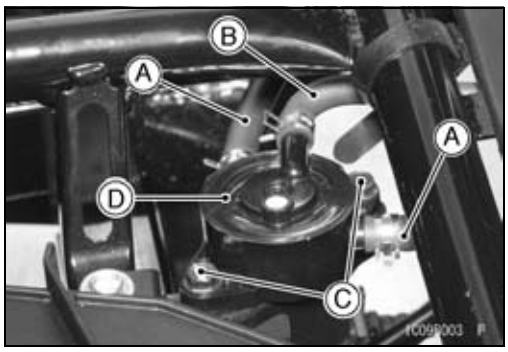

- Tilt up the Seat.
- Disconnect:
  Fuel Hoses [A]
  Vacuum Hose [B]
- Remove:
  Fuel Pump Mounting Bolts [C]
  Fuel Pump [D]

NOTE

○For KAF400AB ~/BB ~, the fuel pump mounting angle and the shape of the fuel pump bracket are different.

Fuel Pump Installation

- Install:
  Fuel Pump
  Fuel Pump Mounting Bolts

NOTE

○For KAF400AB ~/BB ~, the fuel pump mounting angle and the shape of the fuel pump bracket are different.

- Tighten:

Torque - Fuel Pump Mounting Bolts: 5.4 N·m (0.55 kgf·m, 48 in·lb)

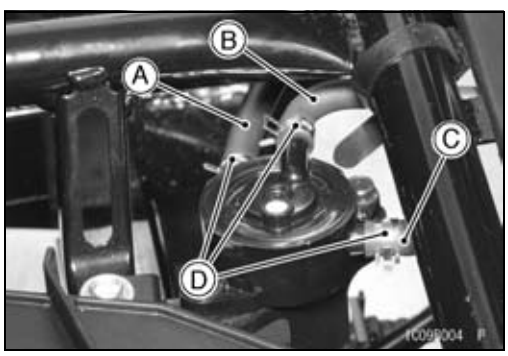

- Install:
  Fuel Hose (Fuel Tap Side) [A]
  Vacuum Hose [B]
  Fuel Hose (Carburetor Side) [C]
  Clamps [D]

Fuel Pump

Fuel Pump Inspection

- Remove the fuel pump (see Fuel Pump Removal).

★If the hose connection areas [A] of the fittings are damaged, replace the fuel pump.

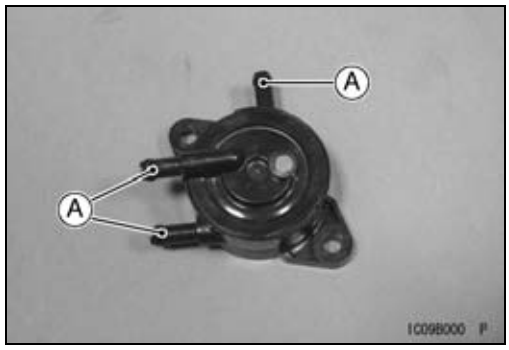

- Blow the air to the outlet fitting [A], and make sure does not flow the blown air from the inlet fitting [B].

★If the fuel pump does not operate as described, replace it with a new one.

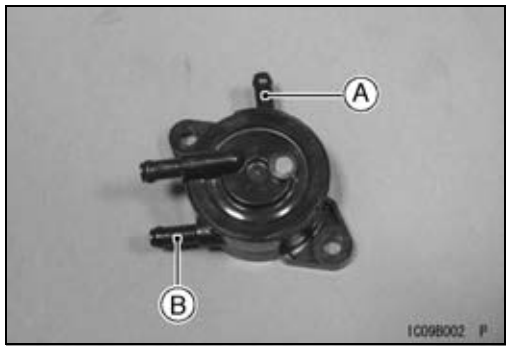

- Inhale the air to the inlet fitting [A], and make sure does not inhale the blown air from the outlet fitting [B].

★If the fuel pump does not operate as described, replace it with a new one.

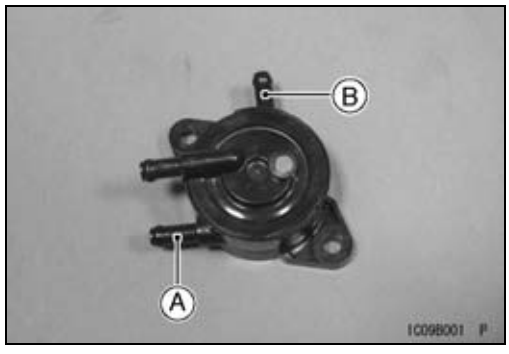

Fuel Filter

Fuel Filter Removal

⚠ WARNING

Gasoline is extremely flammable and can be explosive under certain conditions. Turn the ignition switch OFF. Do not smoke. Make sure the area is well-ventilated and free from any source of flame or sparks; this includes any appliance with a pilot light.

- Refer to Fuel Filter Replacement in the Periodic Maintenance chapter.

Fuel Filter Installation

- Refer to Fuel Filter Replacement in the Periodic Maintenance chapter.

Fuel Filter Inspection

- Visually inspect the fuel filter.

★If the filter is clear with no signs of dirt or other contamination, it is OK and need not be replaced.

★If the filter is dark or looks dirty, replace it. Also, check the rest of the fuel system for contamination.

Fuel Tank

Fuel Tank Removal

⚠ WARNING

Fuel is extremely flammable and can be explosive under certain conditions. Turn the main switch OFF. Do not smoke. Make sure the area is well-ventilated and free from any source of flame or sparks; this includes any appliance with a pilot light.

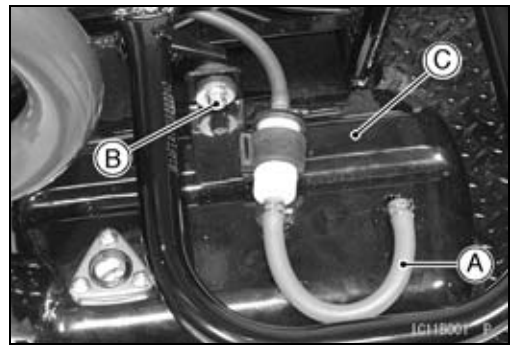

- Remove:
  Right Side Cover (see Frame chapter)
- Disconnect:
  Fuel Hose [A]
- Remove:
  Fuel Tank Bolt [B], Washer and Nut
  Fuel Tank [C]

CAL Model, US and CA Models of the KAF400AB ~ AC/BB ~ BC

- Remove:
  Clamps [A]
- Disconnect:
  Hose [B]
- Remove:
  Check Valve [C]

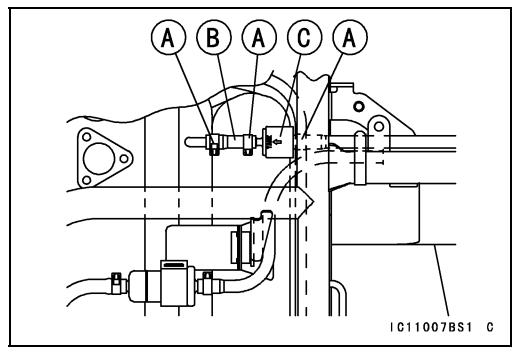

Other than Europe Model of the KAF400AD ~/BD ~

- Remove:
  Clamps [A]
- Disconnect:
  Hose [B]
- Remove:
  Check Valve [C]

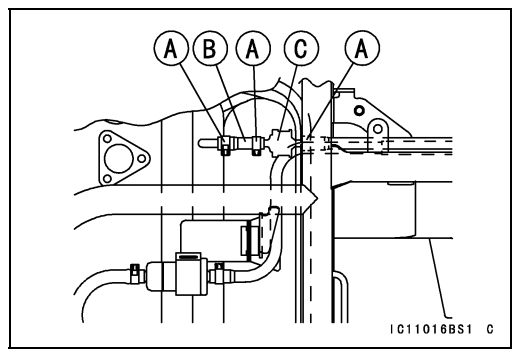

Fuel Tank Installation

- If the rubber dampers [A] were removed, install them onto the frame or fuel tank with an adhesive.

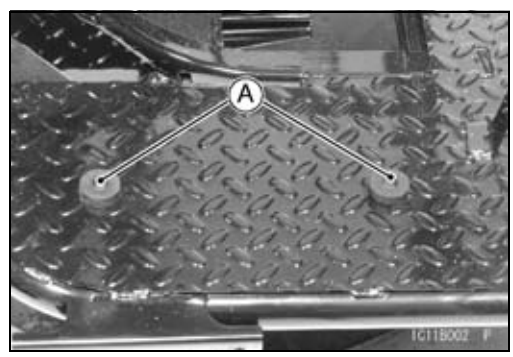

Fuel Tank

- Replace the fuel tank nut with a new one.
- Install:
  Damper [A]
  Collar [B]
  Washer [C]
  Fuel Tank Bolt [D]
  Nut [E]

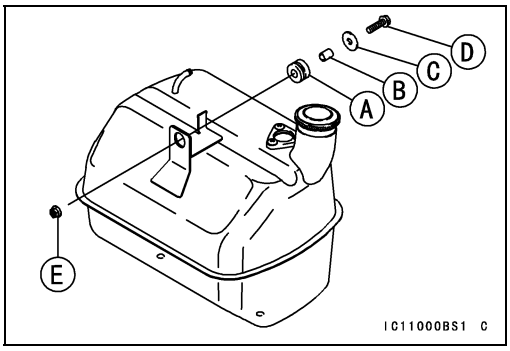

CAL Model, US and CA Models of the KAF400AB ~ AC/BB ~ BC

- Install the check valve so that the arrow [A] faces fuel tank.
  Black Color [B]
  Blue Color [C]

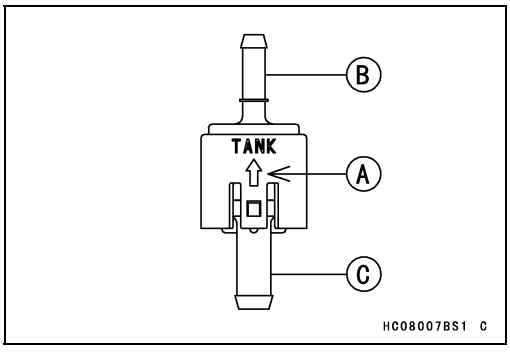

Other than Europe Model of the KAF400AD ~/BD ~

- When installing the check valve [A], install it so that the orange color side [B] faces fuel tank.
  Black Color [C]

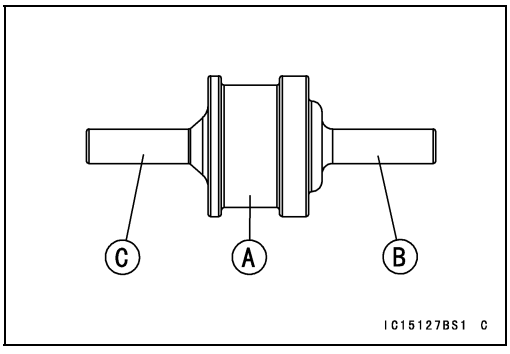

CAL Model, US and CA Models of the KAF400AB ~ AC/BB ~ BC

- Install:
  Hose [A]
  Clamps [B]

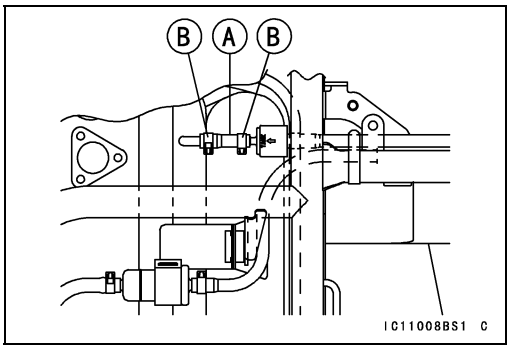

Other than Europe Model of the KAF400AD ~/BD ~

- Install:
  Hose [A]
  Clamps [B]

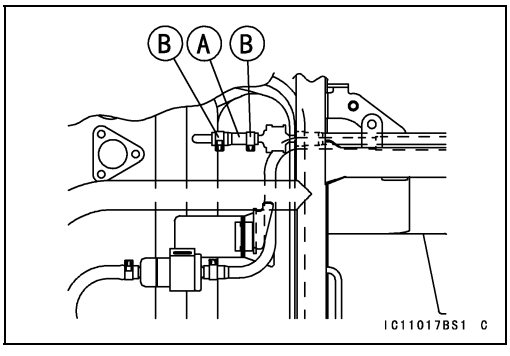

Fuel Tank

Fuel Tank Cleaning/Inspection

⚠ WARNING

Gasoline and low flash-point solvents can be flammable and/or explosive and cause severe burns. Clean the tank in a well-ventilated area, and take care that there are no sparks or flame anywhere near the working area. Do not use gasoline or low flash-point solvents to clean the tank.

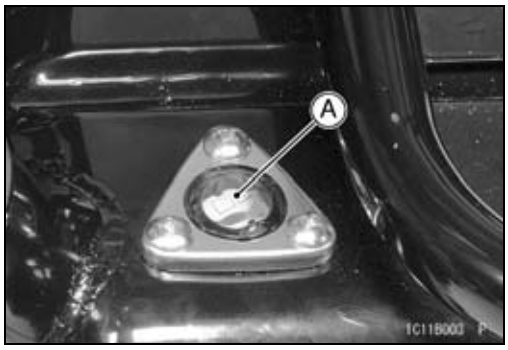

- Remove the fuel tank and drain it.
- Remove the fuel level gauge [A].
- Pour some high flash-point solvent into the fuel tank and shake the tank to remove dirt and fuel deposits.
- Pour the solvent out of the tank.
- Dry the tank with compressed air.
- Visually inspect the gaskets on the fuel level gauge and fuel tank cap for any damage.

★Replace the gaskets if they are damaged.

Evaporative Emission Control System (CAL Model, US and CA Models of the KAF400AB ~/BB ~)

The Evaporative Emission Control System routes fuel vapors from the fuel system into the running engine or stores the vapors in a canister when the engine is stopped. Although no adjustments are required, a thorough visual inspection must be made at the intervals specified by the Periodic Maintenance Chart.

Parts Removal/Installation

⚠ WARNING

Gasoline is extremely flammable and can be explosive under certain conditions. Turn the ignition switch OFF. Do not smoke. Make sure the area is well-ventilated and free from any source of flame or sparks; this includes any appliance with a pilot light.

NOTICE

If gasoline, solvent, water or any other liquid enters the canister, the canister's vapor absorbing capacity is greatly reduced. If the canister does become contaminated, replace it with a new one.

- Connect the hoses according to the diagram of the system. Make sure they do not get pinched or kinked.

Hose Inspection

- Refer to the Evaporative Emission Control System Inspection in the Periodic Maintenance chapter.

Canister Inspection

- Refer to the Evaporative Emission Control System Inspection in the Periodic Maintenance chapter.

Evaporative Emission Control System (CAL Model, US and CA Models of the KAF400AB ~/BB ~)

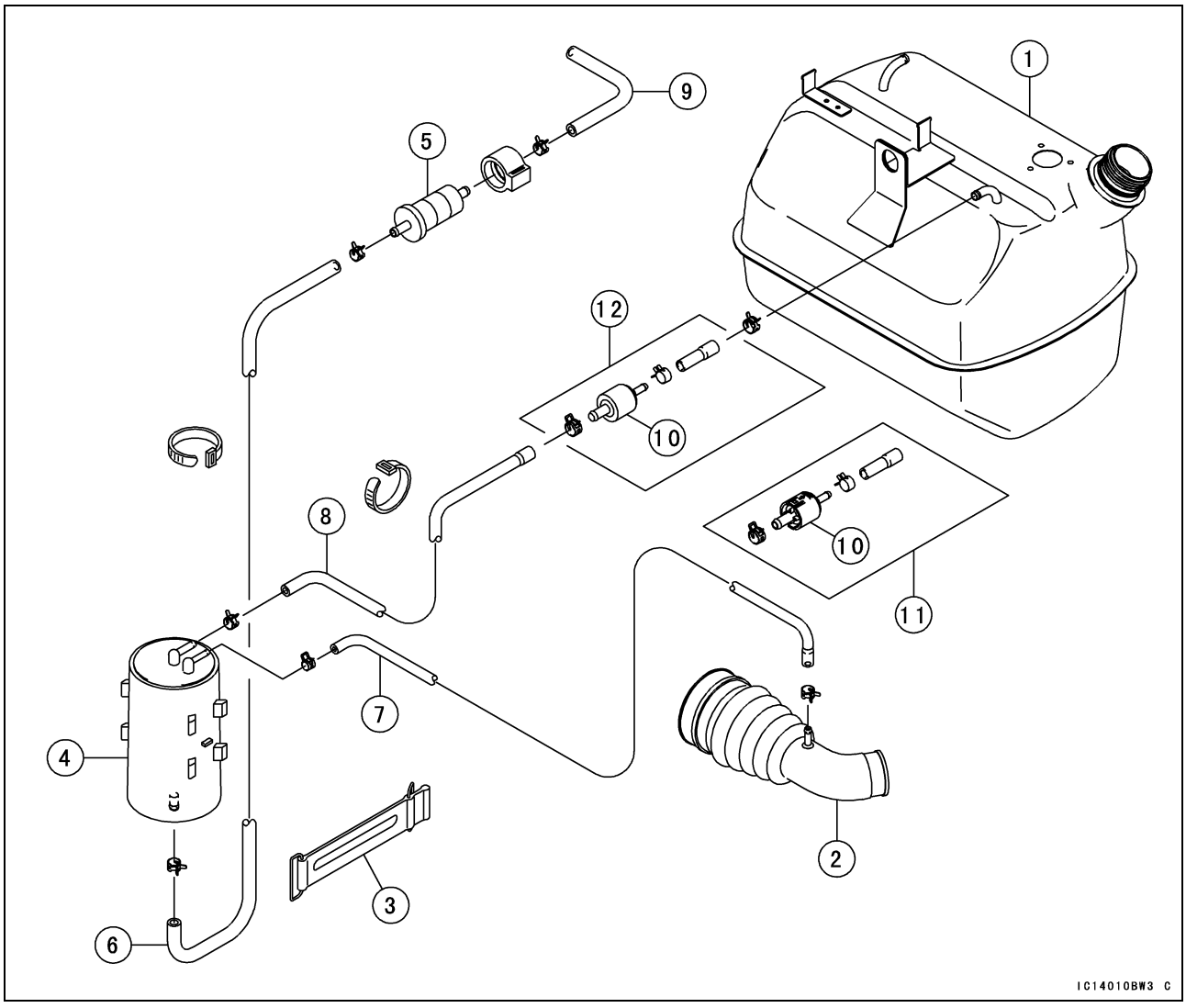

1. Fuel Tank
2. Air Cleaner Duct
3. Band (for Canister)
4. Canister
5. Fuel Filter
6. Fuel Hose (Canister ~ Fuel Filter)
7. Fuel Hose (Canister ~ Air Cleaner Duct)
8. Fuel Hose (Fuel Tank ~ Canister)
9. Fuel Hose
10. Check Valve
11. KAF400A9 ~ AC/B9 ~ BC/C9 ~ CA
12. KAF400AD ~/BD ~

Engine Top End

Table of Contents

Exploded View 4-2
Exhaust System 4-4
Specifications 4-5
Special Tools 4-6
Cylinder Head 4-7
- Cylinder Compression Measurement 4-7
- Cylinder Head Removal 4-7
- Cylinder Head Installation 4-8
- Push Rod Inspection 4-10
- Valve Mechanism Removal/Installation 4-10
- Rocker Arm Inspection 4-10
- Cylinder Head Warp Inspection 4-11

Valves 4-12
- Valve Clearance Inspection 4-12
- Valve Clearance Adjustment 4-12
- Valve Seat Inspection 4-12
- Valve Seat Repair 4-13
- Valve Spring Free Length Inspection 4-16
- Valve Head Thickness Inspection 4-16
- Valve Stem Bend Inspection 4-16
- Valve Stem Diameter Inspection 4-16
- Valve Guide Inside Diameter Inspection 4-17
- Valve to Guide Clearance Measurement (Wobble Method) 4-17

Exhaust Pipe and Muffler 4-18
- Exhaust Pipe Removal 4-18
- Muffler Removal 4-18
- Exhaust Pipe and Muffler Installation 4-19
- Exhaust Pipe and Muffler Inspection 4-19
- Spark Arrester Cleaning 4-19

Exploded View

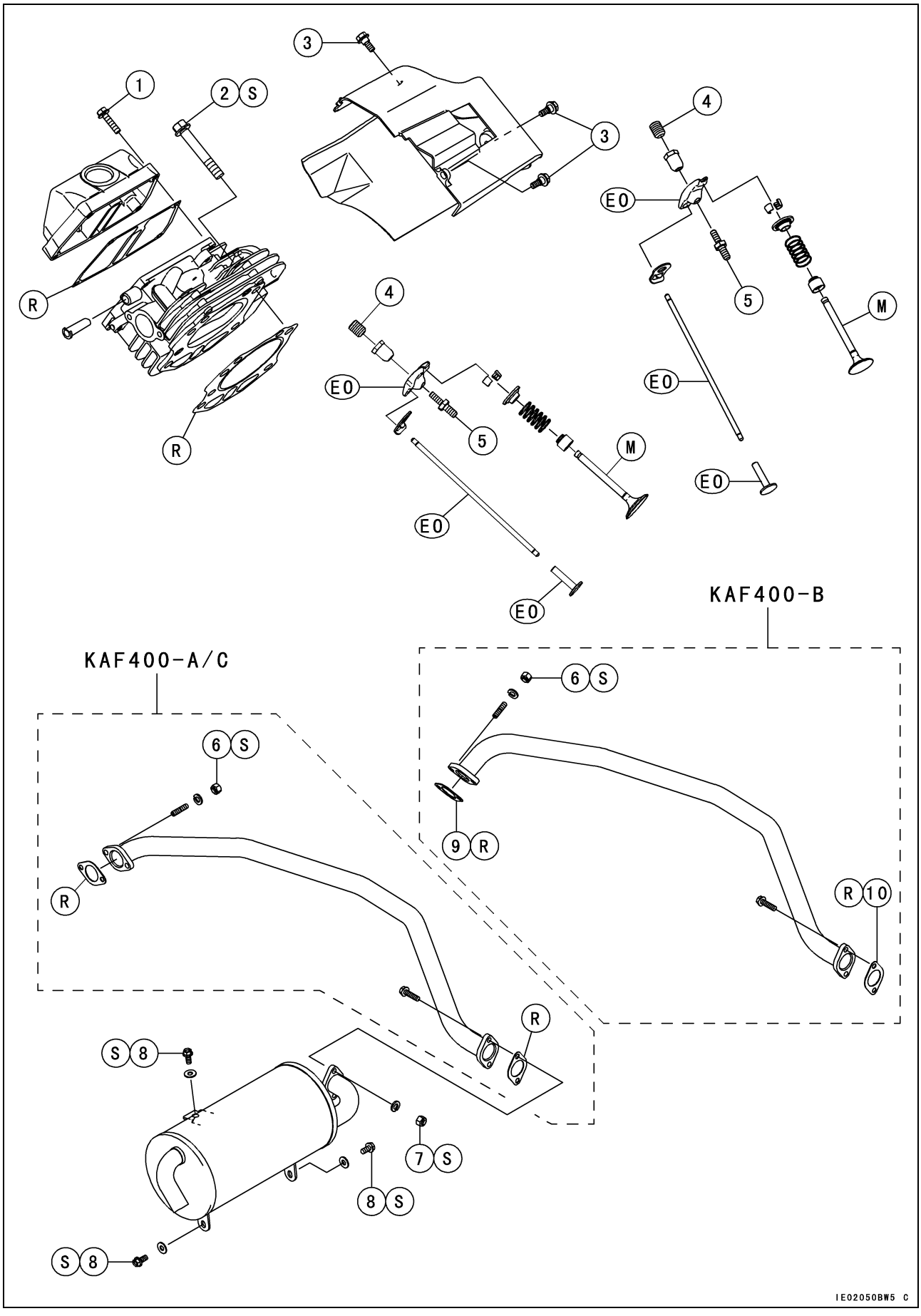

Exploded View

No.	Fastener	Torque			Remarks
		N·m	kgf·m	ft·lb	
1	Cylinder Head Cover Bolts	6.9	0.70	61 in·lb	
2	Cylinder Head Bolts	37	3.8	27	S
3	Engine Shroud Bolts	5.9	0.60	52 in·lb	
4	Valve Adjusting Nut Lock Screw	6.9	0.70	61 in·lb	
5	Rocker Arm Bolts	28	2.9	21	
6	Exhaust Pipe Clamp Nuts	20	2.0	14	S
7	Muffler Clamp Nuts	31	3.2	23	S
8	Muffler Mounting Bolts	31	3.2	23	S

9. Front Gasket (P/No. 11061-0133)
10. Rear Gasket (P/No. 11061-0132)

EO: Apply engine oil.
M: Apply molybdenum disulfide grease.
R: Replacement Parts
S: Follow the specific tightening sequence.

Exhaust System

Exhaust System

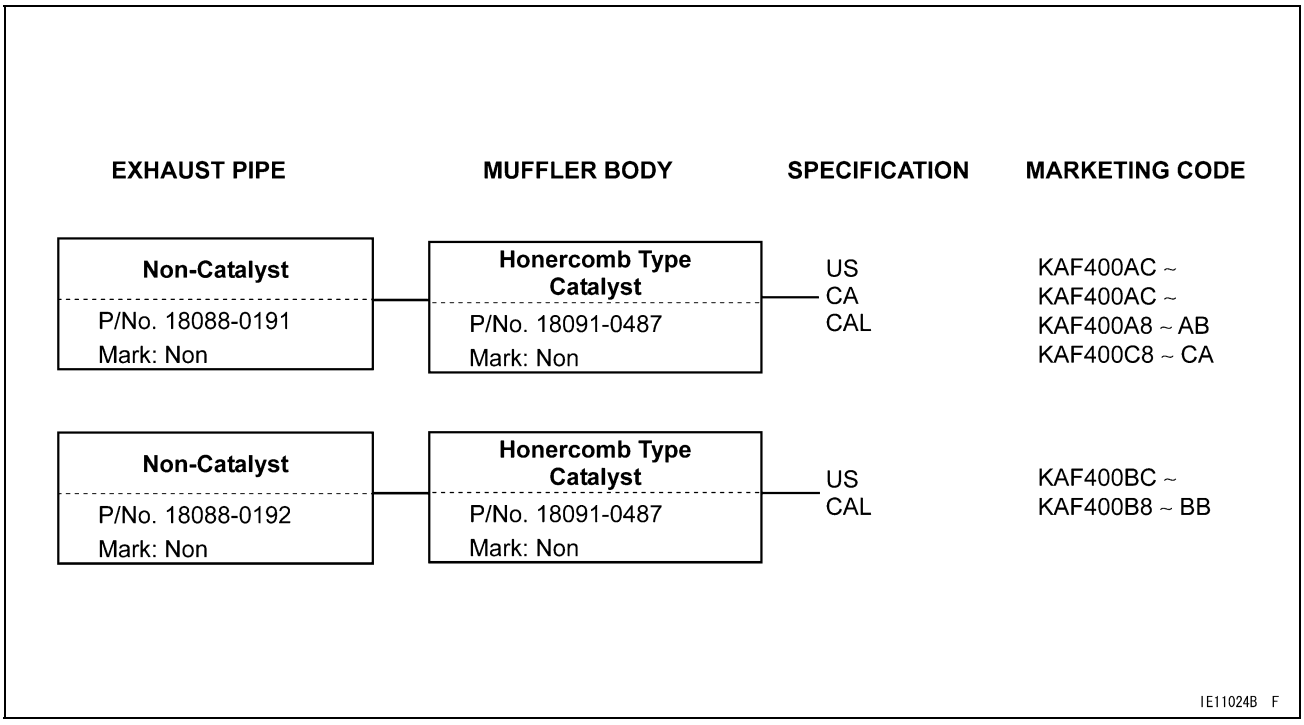

Specifications

Item	Standard	Service Limit
Cylinder Head		
Cylinder Compression	(Usable Range)	
	340 ~ 590 kPa (3.5 ~ 6.0 kgf/cm², 50 ~ 85 psi) @530 r/min (rpm)	– – –
Rocker Arm Push Rod Runout	– – –	TIR 0.5 mm (0.02 in.)
Cylinder Head Warp	– – –	0.03 mm (0.001 in.)
Valves		
Valve Clearance (when cold)	0.10 ~ 0.15 mm (0.0039 ~ 0.0059 in.)	– – –
Valve Seating Surface:		
Outside Diameter:		
Inlet	32.8 mm (1.291 in.)	– – –
Exhaust	27.6 mm (1.087 in.)	– – –
Width:		
Inlet	1.1 ~ 1.7 mm (0.043 ~ 0.070 in.)	– – –
Exhaust	1.0 ~ 1.5 mm (0.039 ~ 0.059 in.)	– – –
Valve Seat Cutting Angle	45°	– – –
Valve Spring Free Length	35 mm (1.38 in.)	32.6 mm (1.28 in.)
Valve Head Thickness	0.7 mm (0.028 in.)	0.4 mm (0.016 in.)
Valve Stem Bend	Less than 0.01 mm (0.0004 in.) TIR	TIR 0.05 mm (0.0020 in.)
Valve Stem Diameter:		
Inlet	6.960 ~ 6.975 mm (0.2740 ~ 0.2746 in.)	6.95 mm (0.274 in.)
Exhaust	6.945 ~ 6.960 mm (0.2734 ~ 0.2740 in.)	6.93 mm (0.273 in.)
Valve Guide Inside Diameter	7.000 ~ 7.015 mm (0.2756 ~ 0.2762 in.)	7.08 mm (0.279 in.)
Valve/guide Clearance (wobble method):		
Inlet	0.06 ~ 0.13 mm (0.0024 ~ 0.0051 in.)	0.29 mm (0.011 in.)
Exhaust	0.10 ~ 0.17 mm (0.0039 ~ 0.0067 in.)	0.33 mm (0.013 in.)

Special Tools

Compression Gauge, 20 kgf/cm²:
57001-221

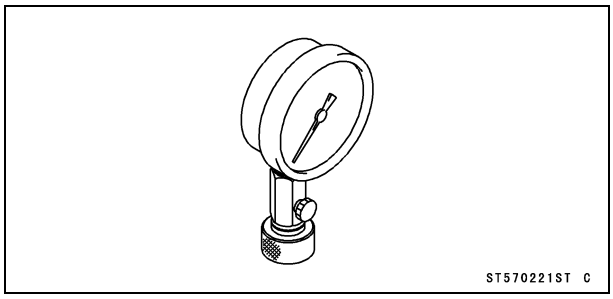

Valve Seat Cutter, 45° - ϕ32:
57001-1115

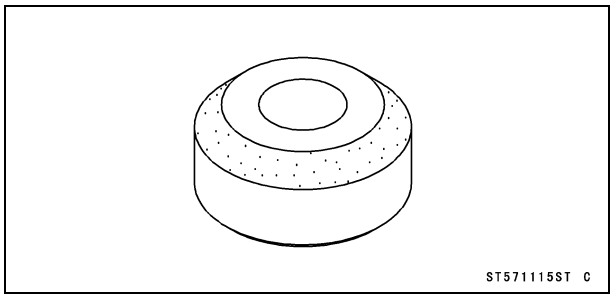

Valve Seat Cutter, 45° - ϕ35:
57001-1116

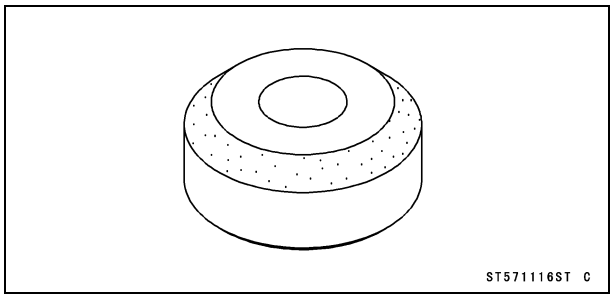

Valve Seat Cutter, 32° - ϕ35:
57001-1121

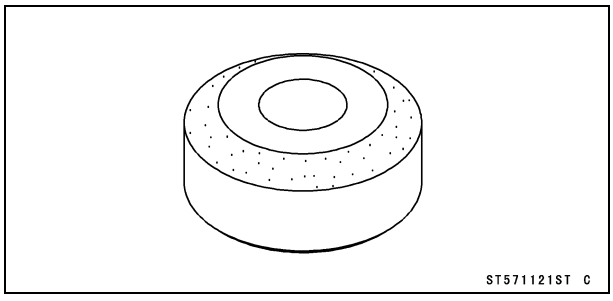

Valve Seat Cutter, 32° - ϕ38.5:
57001-1122

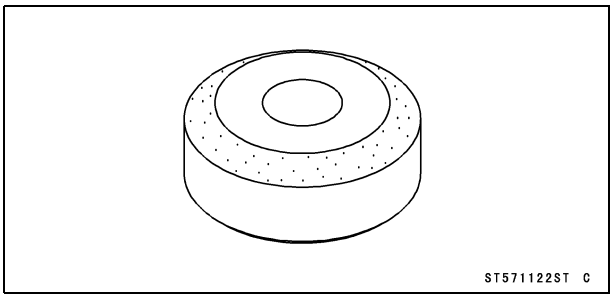

Valve Seat Cutter Holder, ϕ7:
57001-1126

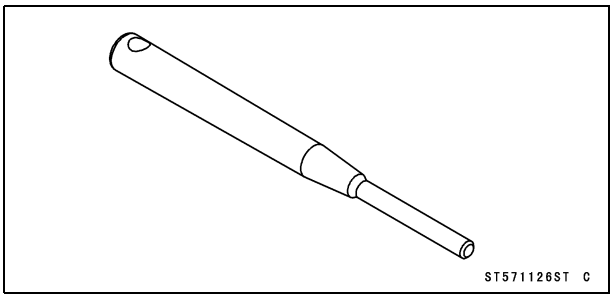

Valve Seat Cutter Holder Bar:
57001-1128

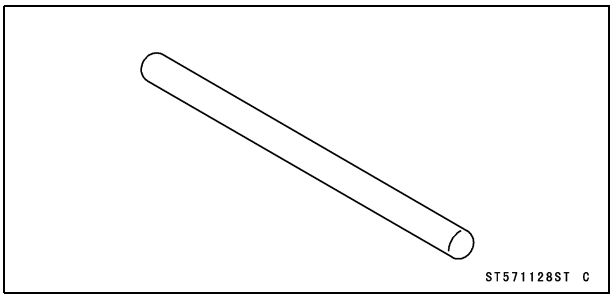

Compression Gauge Adapter, M14 × 1.25:
57001-1159

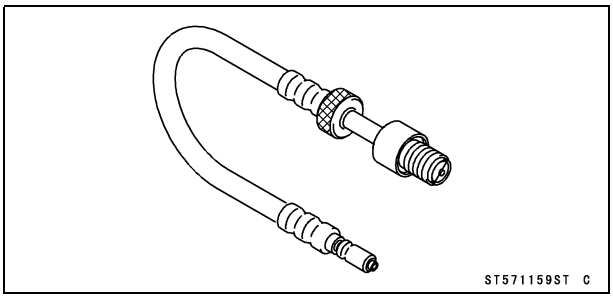

Cylinder Head

Cylinder Compression Measurement

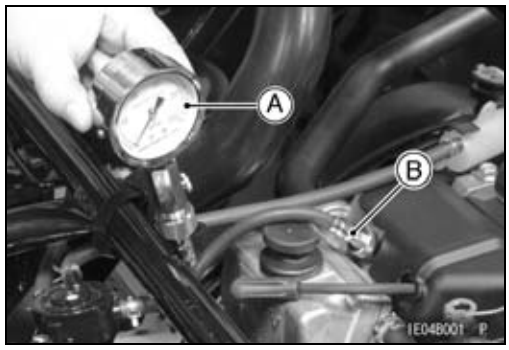

- Tilt up the cargo bed.
- Thoroughly warm up the engine so that the engine oil between the piston and the cylinder wall will help seal compression as it does during normal running.
- Stop the engine, remove the spark plug, and attach a compression gauge [A] firmly into the spark plug hole.

Special Tools - Compression Gauge, 20 kgf/cm²: 57001-221
Compression Gauge Adapter, M14 × 1.25 [B]: 57001-1159

- Using the starter motor, turn the engine over with the throttle fully open until the compression gauge stops rising; this is the highest compression reading obtainable.

Cylinder Compression
Usable Range: 340 ~ 590 kPa (3.5 ~ 6.0 kgf/cm², 50 ~ 85 psi) @530 r/min (rpm)

- Repeat the measurement to the other cylinder.

The following table should be consulted if the obtainable compression reading is not within the usable range.

Problem	Diagnosis	Remedy (Action)
Cylinder compression is higher than usable range.	Carbon accumulation on piston and cylinder head, and in combustion chamber possibly due to damaged valve stem oil seal and/or damaged piston oil rings.	Remove the carbon deposits and replace damaged parts if necessary.
	Incorrect cylinder head gasket thickness	Replace with a gasket of the proper thickness.
Cylinder compression is lower than usable range.	Gas leakage around cylinder head	Replace damaged gasket and check cylinder head warp.
	Bad condition of valve seating	Repair if possible.
	Incorrect valve, piston/cylinder clearance	Adjust.
	Piston seizure	Inspect cylinder and liner and replace/repair as necessary.
	Bad condition of piston ring and/or piston ring grooves	Replace.

Cylinder Head Removal

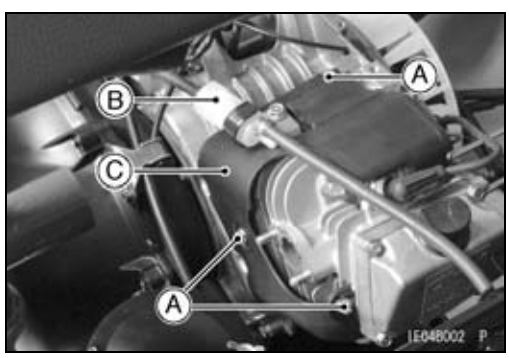

- Remove:
  Cargo Bed (see Frame chapter)
  Carburetor (see Fuel System chapter)
  Fan Housing (see Alternator Removal in the Electrical System chapter)
  Bolts [A]
  Tank [B]
  Engine Shroud [C]

Cylinder Head

- Remove:
  Spark Plug Cap [A]
  Oil Level Gauge [B]
  Cylinder Head Cover Bolts [C]
  Cylinder Head Cover [D]

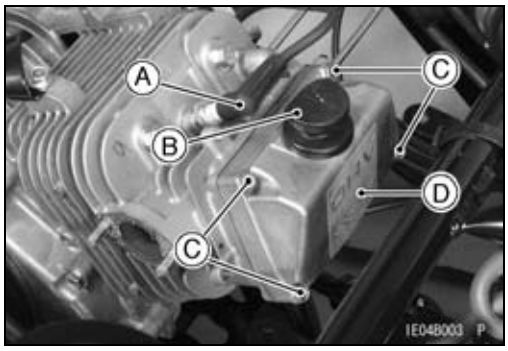

- Position the crankshaft at TDC of the end of the compression stroke.
- Loosen:
  Lock Screws [A]
- Remove:
  Valve Clearance Adjusting Nuts [B]
  Rocker Arm [C]
  Push Rods [D]

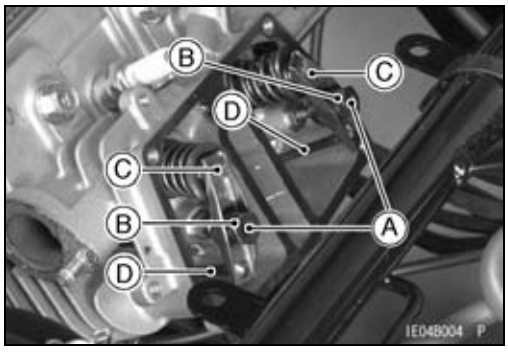

- Remove:
  Cylinder Head Bolts [A]
  Push Rod Guides [B]
  Cylinder Head [C]

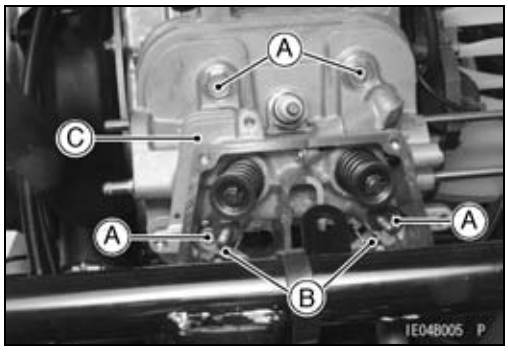

Cylinder Head Installation

- Clean the mating surface of the cylinder head and the cylinder.
- Install the dowel pins [A].
- Replace the gasket [B] with a new one.

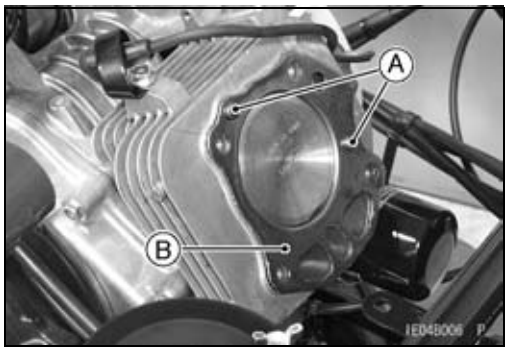

- Install:
  Cylinder Head
  Push Rod Guides [A]

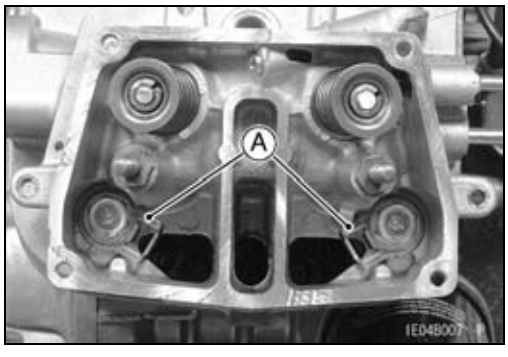

Cylinder Head

- Tighten the cylinder head bolts following the tightening sequence as shown.

  Torque - Cylinder Head Bolts: 37 N·m (3.8 kgf·m, 27 ft·lb)

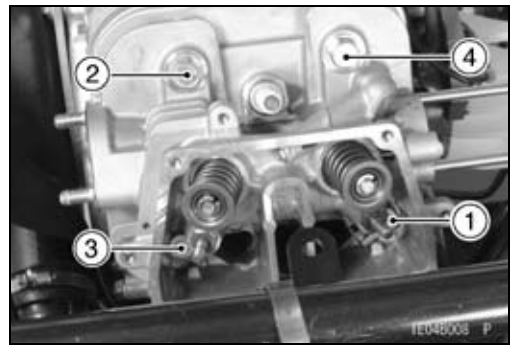

- Apply engine oil to the push rods [A] and install them onto the tappet [B].

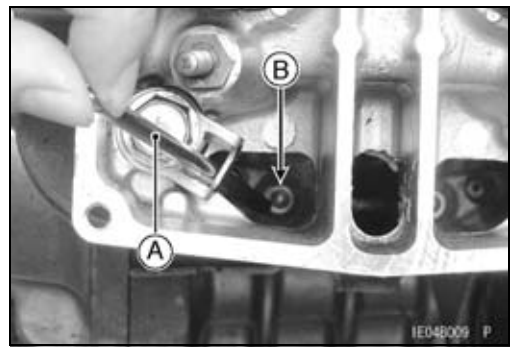

○To install the push rods [A] in the correct positions on the tappets [B], insert the push rod [A] so that the end of the push rod is sliding down along inside wall [C] of the crankcase and position the push rod end on to the tappet.
○Check both inlet and exhaust push rods on each cylinder are lowest position on the cam lobes [D]. If not, turn the alternator rotor clockwise one turn and position the crankshaft at TDC of the compression stroke.
○Be sure the end of the push rods are correctly seated on the tappets.

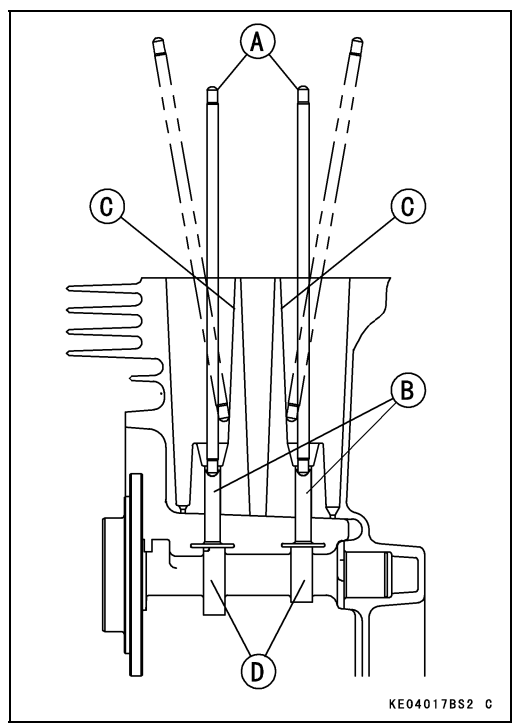

- Apply engine oil to the rocker arms.
- Install:
  Rocker Arms
  Valve Clearance Adjusting Nuts
- Check and adjust the valve clearance (see Valve Clearance Inspection in the Periodic Maintenance chapter).
- Install:
  New Gasket
  Cylinder Head Cover
- Tighten:

  Torque - Cylinder Head Cover Bolts: 6.9 N·m (0.70 kgf·m, 61 in·lb)
  Engine Shroud Bolts: 5.9 N·m (0.60 kgf·m, 52 in·lb)

Push Rod Inspection

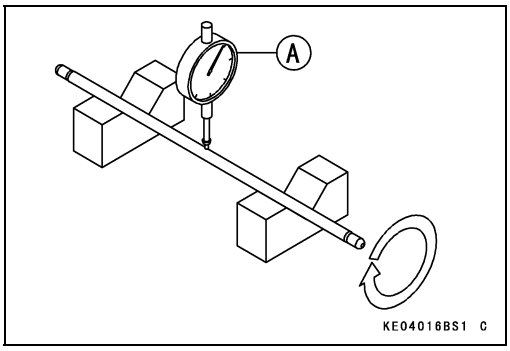

- Place the rocker arm push rod in V blocks that are as far apart as possible, and set a dial gauge [A] on the rod at a point halfway between the blocks. Turn the rod to measure the runout. The difference between highest and the lowest dial readings is the amount of runout.

★If the runout exceeds the service limit, replace the rod.

Rocker Arm Push Rod Runout
Service Limit: TIR 0.5 mm (0.02 in.)

Valve Mechanism Removal/Installation

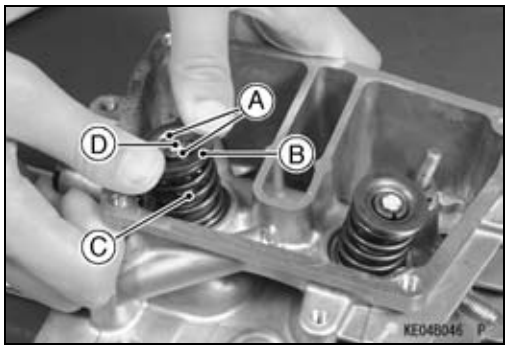

- Remove:
  Cylinder Head (see Cylinder Head Removal)
- Support the valve head in the combustion chamber with a suitable block.
- To remove the collets [A], push down the valve retainer [B] with thumbs and remove the collets.
- Remove the valve retainer, spring [C] and valve [D] .

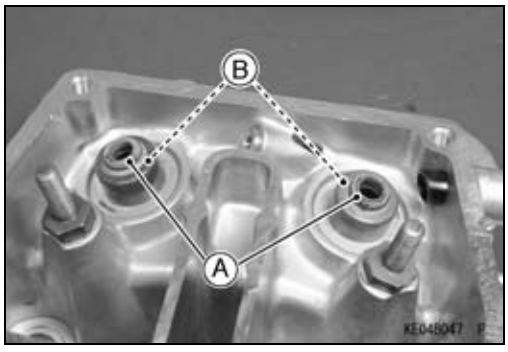

- Remove the stem seals [A].

NOTE

○*It is not necessary to remove the stem seal unless it is being replaced.*
○*Valve guide [B] is not replaceable, do no remove it.*

- Apply engine oil to the valve stems and install them.
- Check to see that the valve moves smoothly up and down in the guide.
- Install the spring and the valve retainer.
- Install the valve retainer while push down the valve retainer with the thumbs.
- Install:
  Cylinder Head (see Cylinder Head Installation)

Rocker Arm Inspection

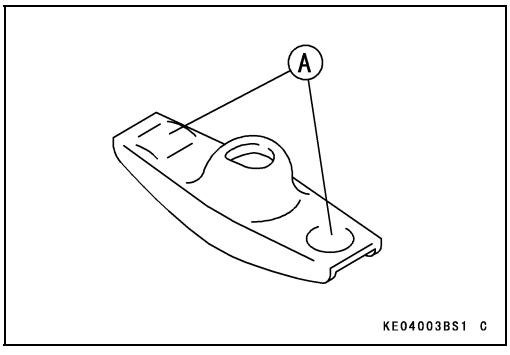

- Clean and inspect the rocker arm where it touches the push rod and valve stem.

★If the contact points [A] are worn or damaged, replace the rocker arm.

Cylinder Head

Cylinder Head Warp Inspection

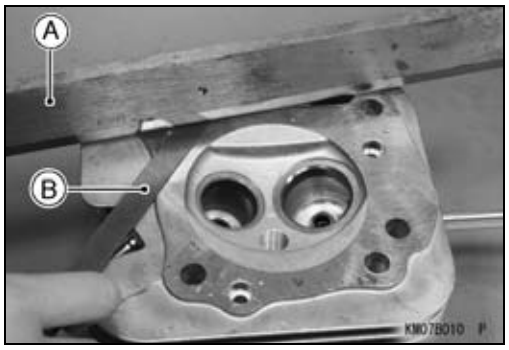

- Lay a straightedge [A] across the lower surface of the head at several different points, and measure warp by inserting a thickness gauge [B] between the straightedge and the head.

★If warp exceeds the service limit, repair the mating surface. Replace the cylinder head if the mating surface is badly damaged.

Cylinder Head Warp
Service Limit: 0.03 mm (0.001 in.)

Valves

Valve Clearance Inspection

- Refer to the Valve Clearance Inspection in the Periodic Maintenance chapter.

Valve Clearance Adjustment

- Refer to the Valve Clearance Adjustment in the Periodic Maintenance chapter.

Valve Seat Inspection

- Remove the valve.
- Check the valve seating surface [A] between the valve [B] and valve seat [C].
- Coat the valve seat with machinist's dye.
- Push the valve into the guide.
- Rotate the valve against the seat with a lapping tool.
- Pull the valve out, and check the seating pattern on the valve head. It must be the correct width and even all the way around.

NOTE

○*The valve stem and guide must be in good condition, or this check will not be valid.*

★If the valve seating pattern is not correct, repair the seat.

- Measure the outside diameter [D] of the seating pattern on the valve seat.

★If the outside diameter of the valve seating pattern is too large or too small, repair the seat.

Valve Seating Surface Outside Diameter

Inlet:	**32.8 mm (1.291 in.)**
Exhaust:	**27.6 mm (1.087 in.)**

- Measure the seat width [E] of the portion where there is no build-up carbon (white portion) of the valve seat with a vernier caliper.

  Good [F]
  Too Wide [G]
  Too Narrow [H]
  Uneven [J]

★If the width is too wide, too narrow or uneven, repair the seat (See Valve Seat Repair).

Valve Seating Surface Width Standard

Inlet:	**1.1 ~ 1.7 mm (0.043 ~ 0.070 in.)**
Exhaust:	**1.0 ~ 1.5 mm (0.039 ~ 0.059 in.)**

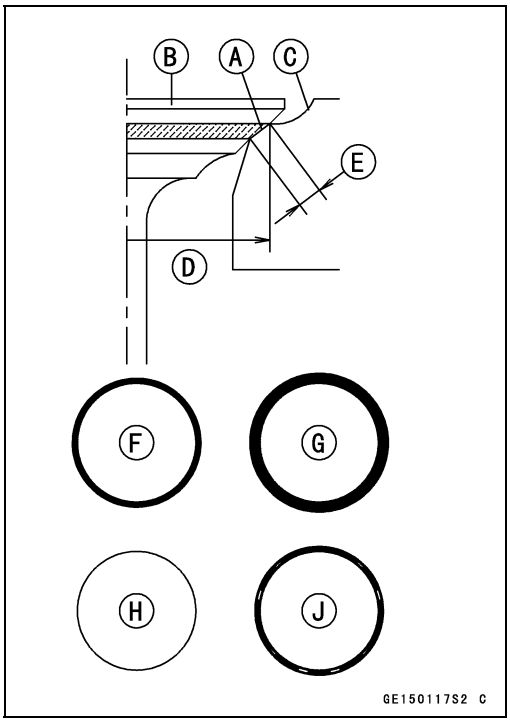

Valves

Valve Seat Repair

- Follow the manufacturer's instructions for use of valve seat cutters.

Special Tools - Valve Seat Cutter, 45° - ϕ35: 57001-1116 [IN]
Valve Seat Cutter, 32° - ϕ38.5: 57001-1122 [IN]
Valve Seat Cutter, 45° - ϕ32: 57001-1115 [EX]
Valve Seat Cutter, 32° - ϕ35: 57001-1121 [EX]
Valve Seat Cutter Holder, ϕ7: 57001-1126
Valve Seat Cutter Holder Bar: 57001-1128

★If the manufacture's instructions are not available, use the following procedure.

Seat Cutter Operating Cares

1. The valve seat cutter is designed only for valve seat repair. Therefore the cutter must not be used for other purposes.
2. Do not drop or hit the valve seat cutter, or the diamond particles may fall off.
3. Do not fail to apply engine oil to the valve seat cutter before grinding the seat surface. Also wash off ground particles sticking to the cutter with washing oil.

NOTE

○*Do not use a wire brush to remove the metal particles from the cutter. It will take off the diamond particles.*

4. Setting the valve seat cutter holder [A] in position, operate the cutter [B] with one hand [C]. Do not apply too much force to the diamond portion.

NOTE

○*Prior to grinding, apply oil to the cutter, and during the operation wash off any ground particles sticking to the cutter with washing oil.*

5. After use wash the cutter with washing oil and apply a thin layer or engine oil before storing.

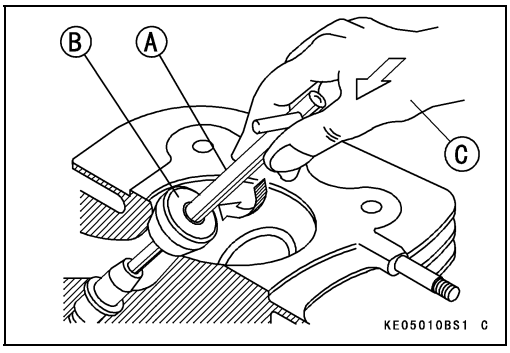

Marks Stamped on the Cutter

The marks stamped on the back of the cutter [A] represent the following.

60 ..... Cutter angle [B]
37.5ϕ ..... Outer diameter of cutter [C]

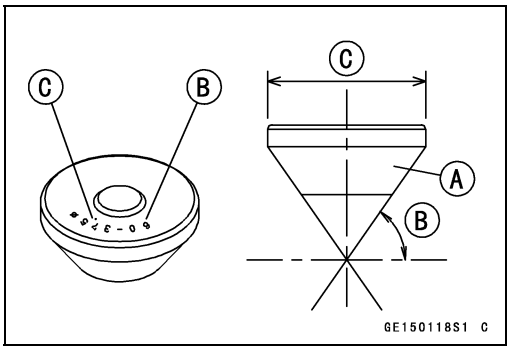

Valves

Operating Procedures

- Clean the seat area carefully.
- Coat the seat with machinist's dye.
- Fit a 45° cutter to the holder and slide it into the valve guide.
- Press down lightly on the handle and turn it right or left. Grind the seating surface only until it is smooth.

NOTICE
Do not grind the seat too much. Overgrinding will reduce valve clearance by sinking the valve into the head. If the valve sinks too far into the head, it will be impossible to adjust the clearance, and the cylinder head must be replaced.

- Measure the outside diameter (O.D.) of the seating surface with a vernier caliper.

★If the O.D. of the seating surface is too small, repeat the 45° grind until the diameter is within the specified range.

★If the O.D. of the seating surface is too large, make the 32° grind described below.

- Grind the seat at a 32° angle until the seat O.D. is within the specified range.

○To make the 32° grind, fit a 32° cutter to the holder, and slide it into the valve guide.

○Turn the holder one turn at a time while pressing down very lightly. Check the seat after each turn.

NOTICE
The 32° cutter removes material very quickly. Check the seat outside diameter frequently to prevent overgrinding.

○After making the 32° grind, return to the seat O.D. measurement step above.

- Lap the valve to the seat, once the seat width and O.D. are within the ranges specified above.

○Put a little coarse grinding compound on the face of the valve in a number of places around the valve head.

○Spin the valve against the seat until the grinding compound produces a smooth, matched surface on both the seat and the valve.

○Repeat the process with a fine grinding compound.

[A] Lapper
[B] Valve Seat
[C] Valve

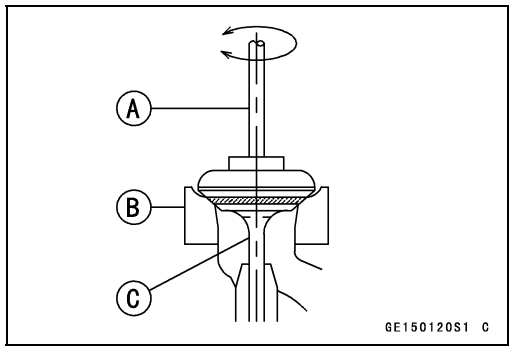

- The seating area should be marked about in the middle of the valve face.

★If the seat area is not in the right place on the valve, check to be sure the valve is the correct part. If it is, it may have been refaced too much; replace it.

- Be sure to remove all grinding compound before assembly.
- When the engine is assembled, be sure to adjust the valve clearances (see Valve Clearance Adjustment).

Valves

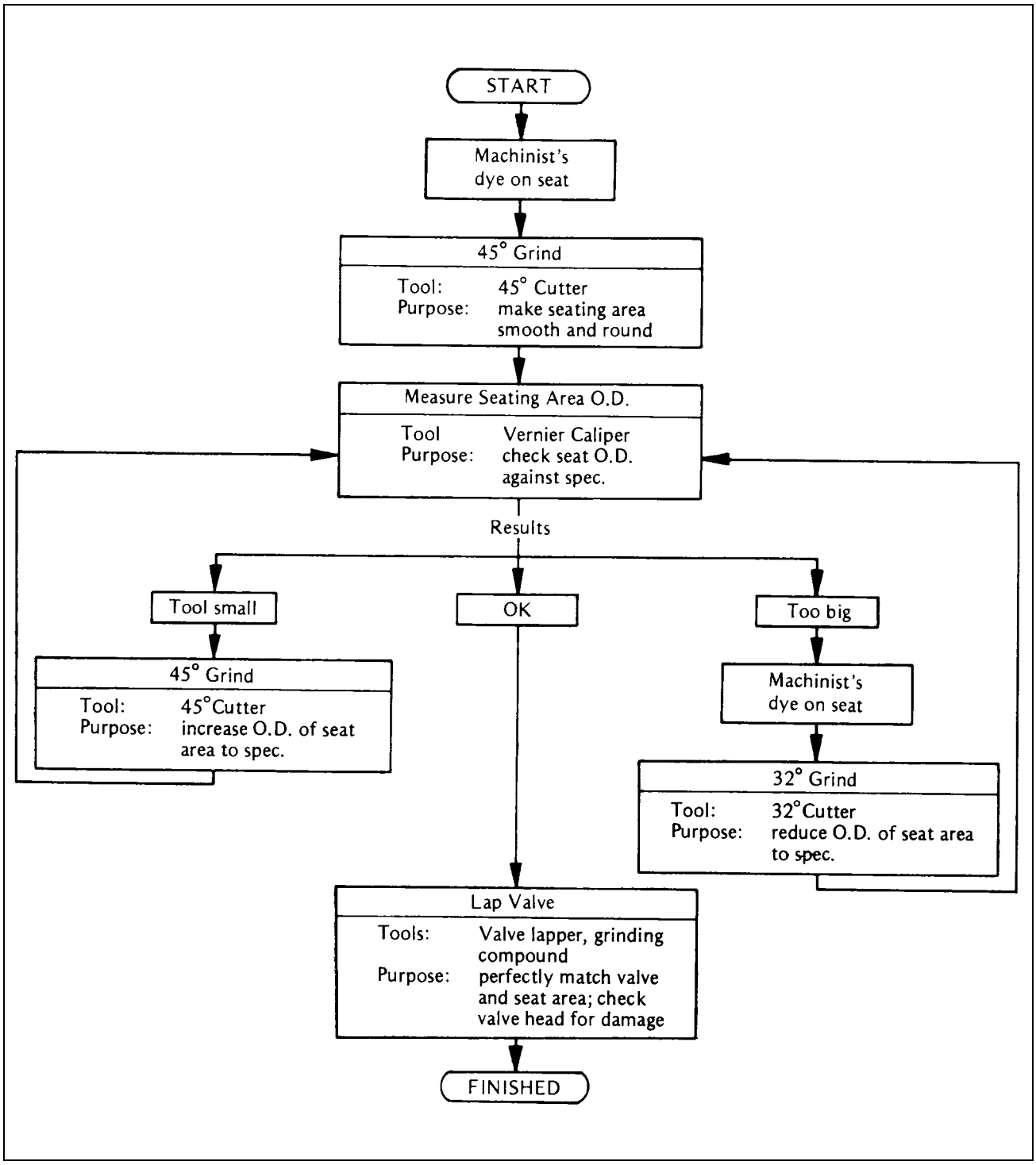
START
Machinist's dye on seat
45° Grind
Tool: 45° Cutter
Purpose: make seating area smooth and round
Measure Seating Area O.D.
Tool Vernier Caliper
Purpose: check seat O.D. against spec.
Results
Tool small
OK
Too big
45° Grind
Tool: 45°Cutter
Purpose: increase O.D. of seat area to spec.
Machinist's dye on seat
32° Grind
Tool: 32°Cutter
Purpose: reduce O.D. of seat area to spec.
Lap Valve
Tools: Valve lapper, grinding compound
Purpose: perfectly match valve and seat area; check valve head for damage
FINISHED

Valves

Valve Spring Free Length Inspection

- Measure the valve spring [A] free length.

★If the free length is less than the service limit, replace the valve spring with a new one.

Valve Spring Free Length

Standard: 35 mm (1.38 in.)

Service Limit: 32.6 mm (1.28 in.)

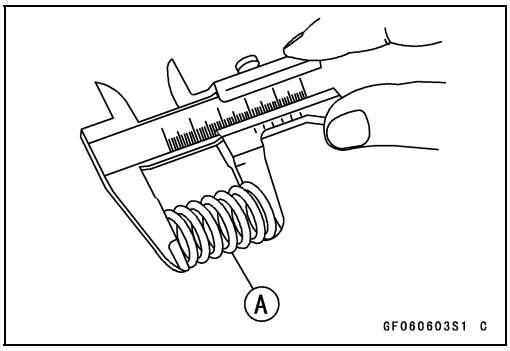

Valve Head Thickness Inspection

- Measure the thickness [A] of the valve head.

★If the valve head thickness is less than the service limit, replace the valve with a new one.

Valve Head Thickness

Standard: 0.7 mm (0.028 in.)

Service Limit: 0.4 mm (0.016 in.)

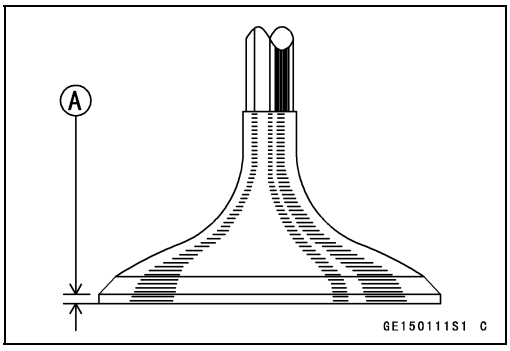

Valve Stem Bend Inspection

- Place the valve in V blocks at each end of the stem, and set a dial gauge [A] on the stem at a point halfway between the blocks. Turn the valve to measure the bend. The difference between the highest and the lowest dial readings is the amount of bend.

★If the valve stem bend is greater than the service limit, replace the valve with a new one.

Valve Stem Bend

Standard: Less than 0.01 mm (0.0004 in.) TIR

Service Limit: TIR 0.05 mm (0.0020 in.)

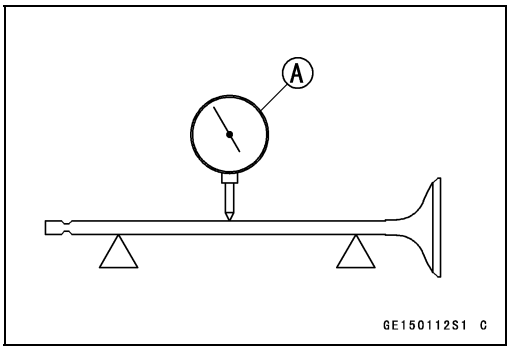

Valve Stem Diameter Inspection

- Measure the diameter of the valve stem [A] in two directions at right angles, at four different positions on the stem.

★If any single measurement is less than the service limit, replace the valve with a new one.

Valve Stem Diameter

Standard:

Inlet	**6.960 ~ 6.975 mm (0.2740 ~ 0.2746 in.)**
Exhaust	**6.945 ~ 6.960 mm (0.2734 ~ 0.2740 in.)**

Service Limit:

Inlet	**6.95 mm (0.274 in.)**
Exhaust	**6.93 mm (0.273 in.)**

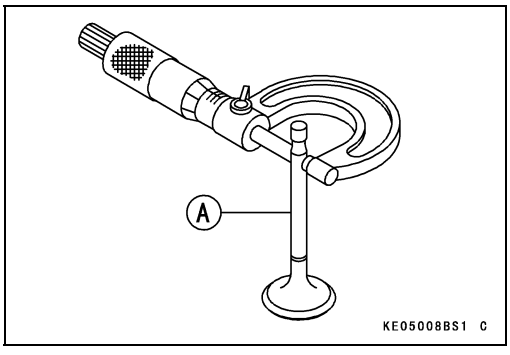

Valves

Valve Guide Inside Diameter Inspection

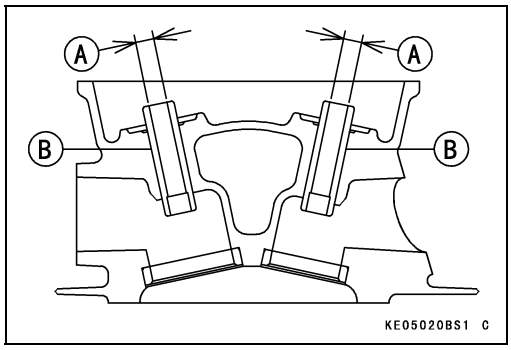

- Measure the inside diameter [A] of the valve guide [B].

★If the valve guide has worn past the service limit, replace the cylinder head.

Valve Guide Inside Diameter

Standard: 7.000 ~ 7.015 mm (0.2756 ~ 0.2762 in.)

Service Limit: 7.08 mm (0.279 in.)

Valve to Guide Clearance Measurement (Wobble Method)

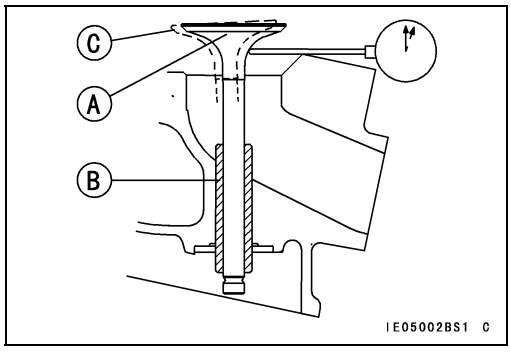

If a small bore gauge is not available, inspect the valve guide wear by measuring the valve/guide clearance with the wobble method, as indicated below.

- Insert a new valve [A] into the guide [B] from the top of the head.
- Set a dial gauge against the stem perpendicular to it as close as possible to the cylinder head upper surface.
- Move the stem back and forth [C] to measure valve/guide clearance.
- Repeat the measurement in a direction at a right angle to the first.

★If the reading exceeds the service limit, replace the guide.

NOTE

○*The reading is not actual valve/guide clearance because the measuring point is above the guide.*

Valve/Guide Clearance (Wobble Method)

Standard:

Inlet	**0.06 ~ 0.13 mm (0.0024 ~ 0.0051 in.)**
Exhaust	**0.10 ~ 0.17 mm (0.0039 ~ 0.0067 in.)**

Service Limit:

Inlet	**0.29 mm (0.011 in.)**
Exhaust	**0.33 mm (0.013 in.)**

Exhaust Pipe and Muffler

Exhaust Pipe Removal

- Remove:
  Right Side Cover (see Frame chapter)
  Exhaust Pipe Clamp Nuts [A]

- Remove:
  Exhaust Pipe Clamp Bolts and Nuts [A]
  Exhaust Pipe [B]

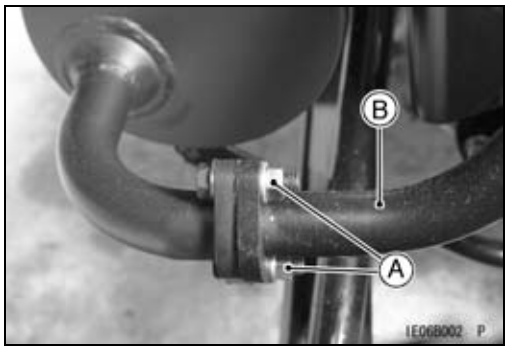

Muffler Removal

- Remove:
  Muffler Clamp Bolts and Nuts [A]

- Remove:
  Muffler Mounting Bolts [A]
  Muffler [B]

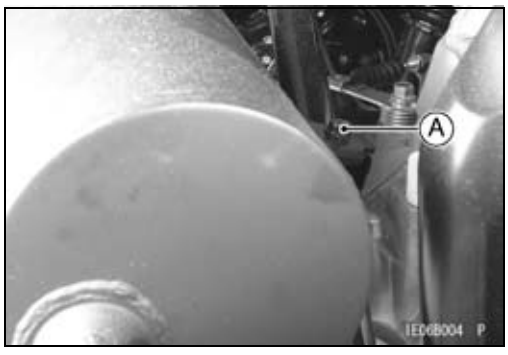

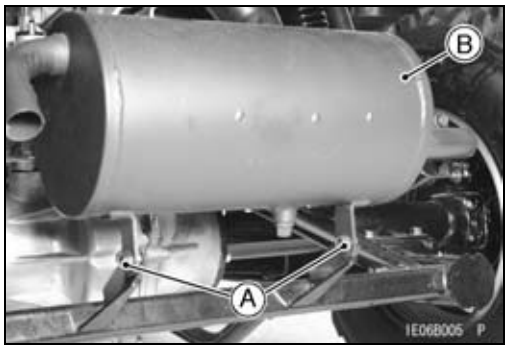

Exhaust Pipe and Muffler

Exhaust Pipe and Muffler Installation

- Replace the exhaust pipe gaskets with new ones as follows.

(KAF400A/C)

[A], [C] Front & Rear Gasket (P/No. 11061-0132)
[B], [D] 50 mm (1.97 in.)

(KAF400B)

[A] Front Gasket (P/No. 11061-0133)
[B] 48 mm (1.89 in.)
[C] Rear Gasket (P/No. 11061-0132)
[D] 50 mm (1.97 in.)

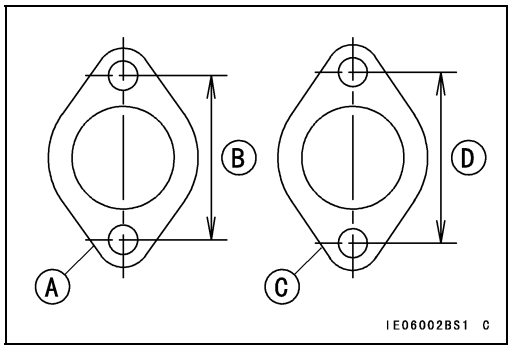

- Tighten the bolts and nuts following the tightening sequence [1-2-3] or [2-1-3].

Torque - Exhaust Pipe Clamp Nuts [1]: 20 N·m (2.0 kgf·m, 14 ft·lb)
Muffler Clamp Nuts [2]: 31 N·m (3.2 kgf·m, 23 ft·lb)
Muffler Mounting Bolts [3]: 31 N·m (3.2 kgf·m, 23 ft·lb)

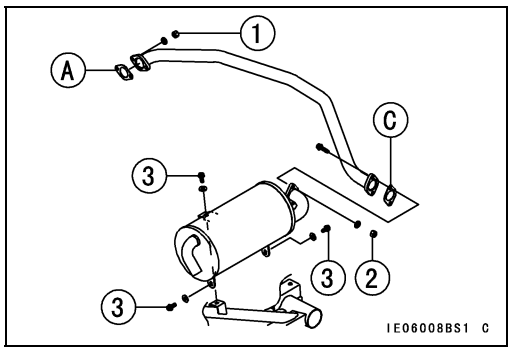

- After installation, thoroughly warm up the engine, wait until the engine cools down, and then retighten the clamp nuts and muffler mounting bolts.

Exhaust Pipe and Muffler Inspection

- Before removing, check for signs of leakage at the exhaust pipe gasket in the cylinder head and at the muffler clamp.

★If there are signs of leakage around the exhaust pipe gasket, it should be replaced. If the muffler-to-exhaust pipe joint leaks, tighten the clamp.

- Check the exhaust pipe and muffler for dents, cracks, rust and holes.

★If the exhaust pipe or muffler is damaged, it should be replaced for best performance and least noise.

Spark Arrester Cleaning

- Refer to the Spark Arrester Cleaning in the Periodic Maintenance chapter.

Converter System

Table of Contents

Exploded View 5-2
Specifications 5-6
Special Tools and Sealant 5-7
Air Cleaner 5-8
- Air Cleaner Element Removal 5-8
- Air Cleaner Element Cleaning/Inspection 5-8
- Air Cleaner Housing Removal 5-9

Torque Converter 5-10
- Torque Converter Removal 5-10
- Torque Converter Installation 5-11
- Torque Converter Case Removal 5-15
- Torque Converter Case Installation 5-15

Drive Belt 5-17
- Drive Belt Removal 5-17
- Drive Belt Installation 5-17
- Drive Belt Inspection 5-17
- Drive Belt Deflection Inspection 5-17
- Drive Belt Deflection Adjustment 5-17

Drive Pulley 5-18
- Drive Pulley Removal 5-18
- Drive Pulley Disassembly 5-18
- Drive Pulley Inspection 5-19
- Spider Shoe Side Clearance Adjustment 5-20
- Bushing Installation 5-22
- Drive Pulley Assembly 5-22
- Drive Pulley Installation 5-23

Driven Pulley 5-24
- Driven Pulley Removal 5-24
- Driven Pulley Disassembly 5-24
- Driven Pulley Inspection 5-26
- Converter Driven Pulley Shoe Inspection 5-26
- Bushing Installation 5-27
- Driven Pulley Assembly 5-27
- Driven Pulley Installation 5-28

High Altitude Setting Information 5-29
- Specifications 5-29

Exploded View

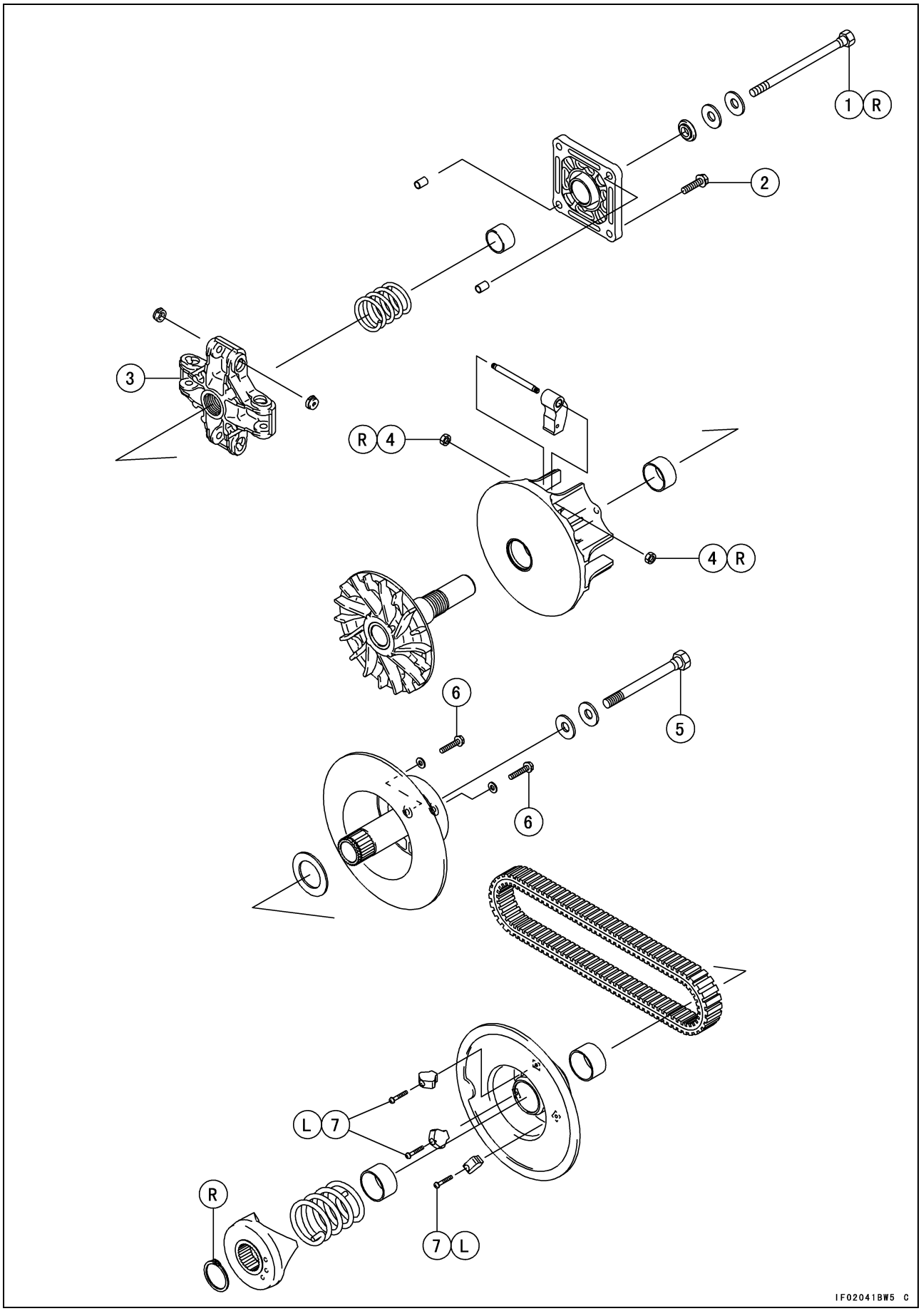

Exploded View

No.	Fastener	Torque			Remarks
		N·m	kgf·m	ft·lb	
1	Drive Pulley Bolt	94	9.6	69	R
2	Drive Pulley Cover Bolts	23	2.3	17	
3	Spider	275	28	203	
4	Weight Pin Nuts	7.0	0.70	61 in·lb	R
5	Driven Pulley Bolt	70	7.1	52	
6	Deflection Bolts	9.0	0.92	80 in·lb	
7	Driven Wear Shoe Mounting Screws	1.1	0.11	9.7 in·lb	L

L: Apply a non-permanent locking agent.
R: Replacement Parts

Exploded View

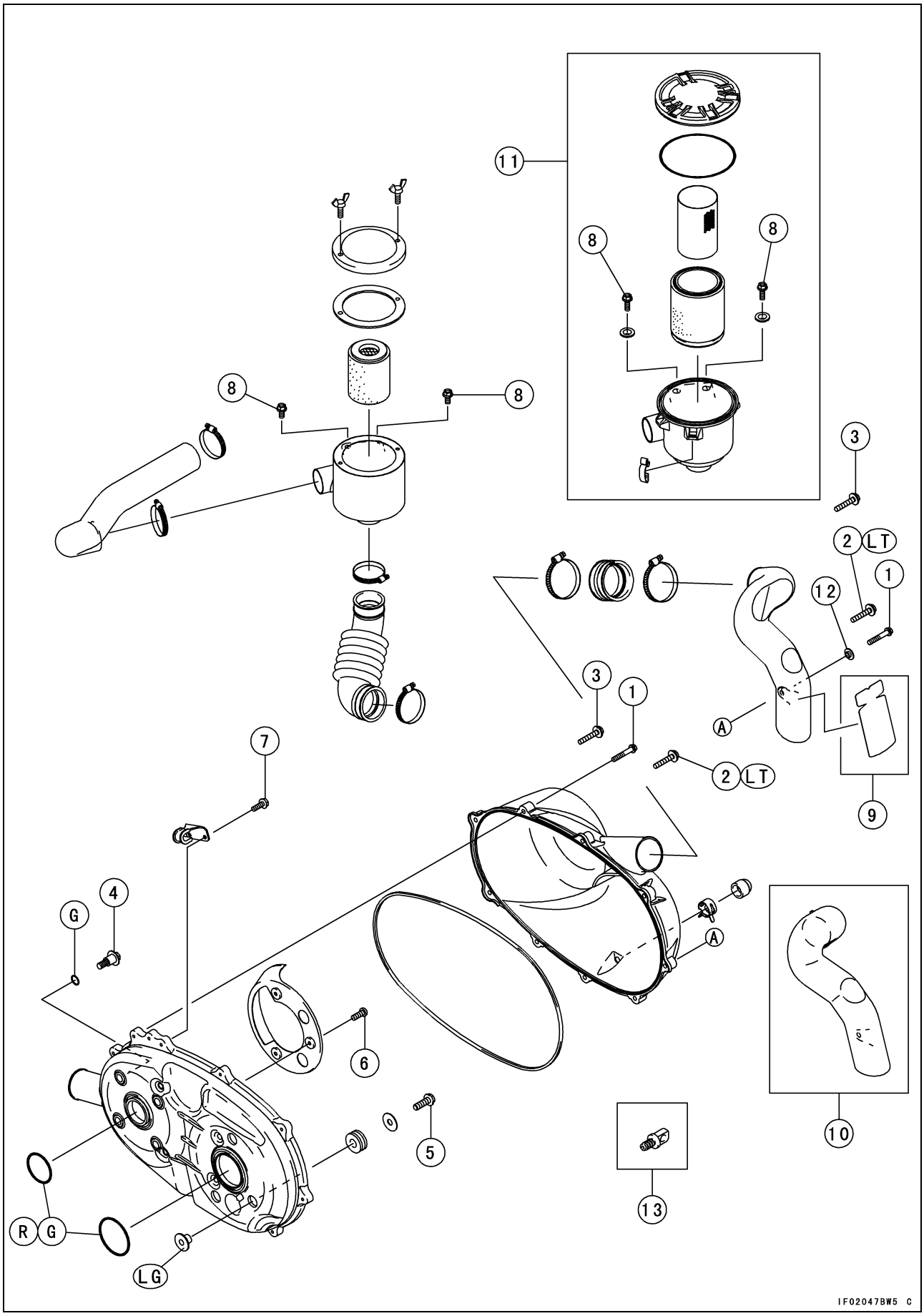

Exploded View

No.	Fastener	Torque			Remarks
		N·m	kgf·m	ft·lb	
1	Converter Cover Bolts (~ KAF400AA/BA/CA Early Models)	4.4	0.45	39 in·lb	
2	Converter Cover Bolts (KAF400AA/BA/CA Late Models ~ KAF400AC/BC)	6.0	0.61	53 in·lb	LT
3	Converter Cover Bolts (KAF400AD ~/BD ~)	8.8	0.90	78 in·lb	
4	Converter Case Front Bolts (26.5 mm)	20	2.0	14	
5	Converter Case Rear Bolts (25 mm)	20	2.0	14	
6	Converter Case Cover Screws	5.0	0.5	44 in·lb	
7	Bracket Bolts	8.8	0.90	78 in·lb	
8	Air Filter Housing Bolts	20	2.0	14	

9. CAL Model, KAF400AA ~/BA ~/CA
10. KAF400-A1 ~ A9/B1 ~ B9/C1 ~ C9
11. KAF400AA/BA/CA Late Models ~
12. ~ KAF400AA/BA/CA Early Models and KAF400AD ~/BD ~
13. ~ KAF400AC/BC/CA

G: Apply grease.
LT: Apply a non-permanent locking agent (LOCTITE 243) to the threads.
LG: Apply liquid gasket (TB1215: 92104-1065, KAF400AA/BA/CA Late Models ~).

Specifications

Item	Standard	Service Limit
Drive Belt		
Belt Deflection	22 ~ 32 mm (0.87 ~ 1.26 in.)	22 ~ 44 mm (0.87 ~ 1.73 in.)
Belt Width	26.1 ~ 27.3 mm (1.03 ~ 1.07 in.)	25.2 mm (0.99 in.)
Drive Pulley		
Cover Bushing Inside Diameter	28.005 ~ 28.089 mm (1.103 ~ 1.106 in.)	28.3 mm (1.114 in.)
Sheave Bushing Inside Diameter	35.002 ~ 35.087 mm (1.378 ~ 1.381 in.)	35.3 mm (1.390 in.)
Spring Free Length	72 mm (2.83 in.)	– – –
Shoe Side Clearance	0.05 ~ 0.20 mm (0.0020 ~ 0.0079 in.)	– – –
Driven Pulley		
Movable Sheave Bushing Inside Diameter	38.016 ~ 38.100 mm (1.497 ~ 1.500 in.)	38.3 mm (1.51 in.)
Spring Free Length	105 mm (4.13 in.)	– – –
Wear Shoe Width	– – –	1.9 mm (0.075 in.)

Special Tools and Sealant

Outside Circlip Pliers:
57001-144

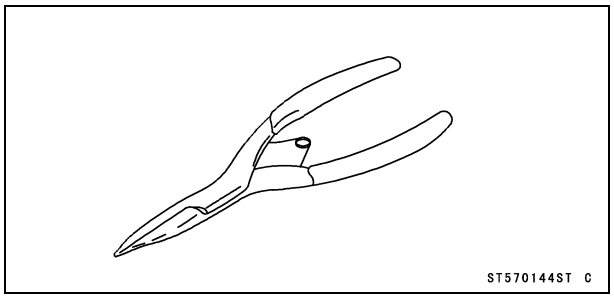

Bearing Driver Set:
57001-1129

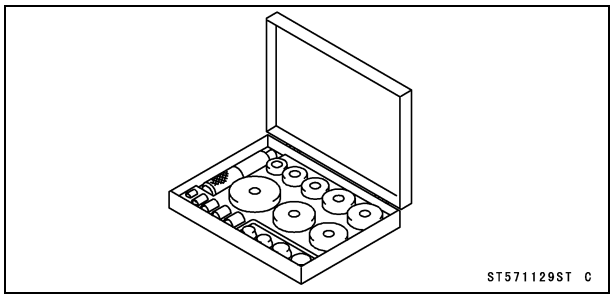

Flywheel & Pulley Holder:
57001-1605

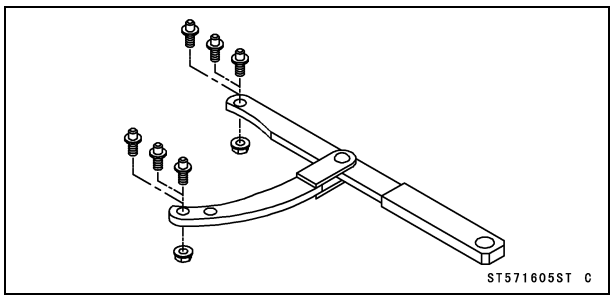

Drive Pulley Puller Bolt:
57001-1429

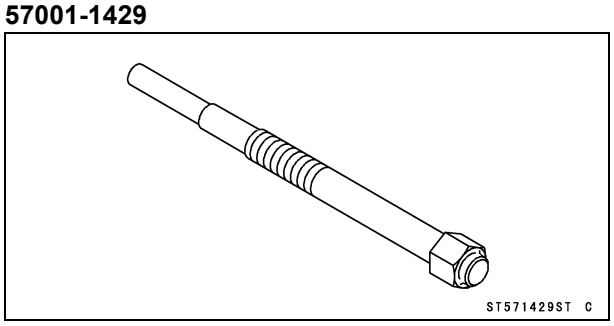

Pulley Holder Attachment:
57001-1472

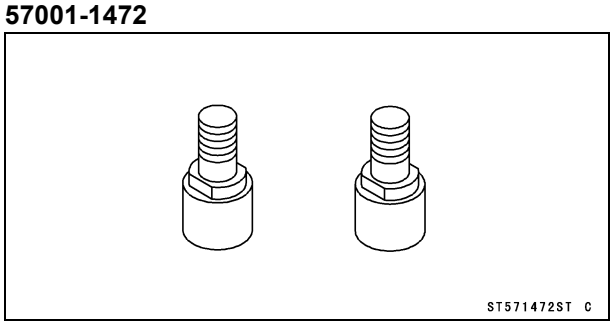

Drive Pulley Holder:
57001-1620

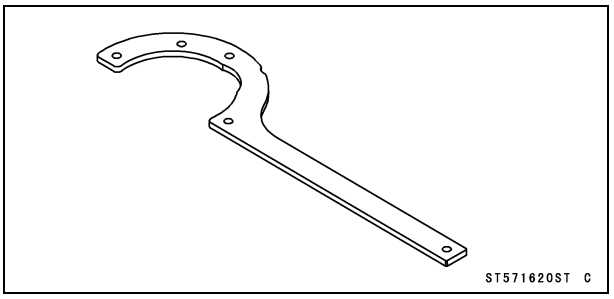

Drive Pulley Wrench:
57001-1627

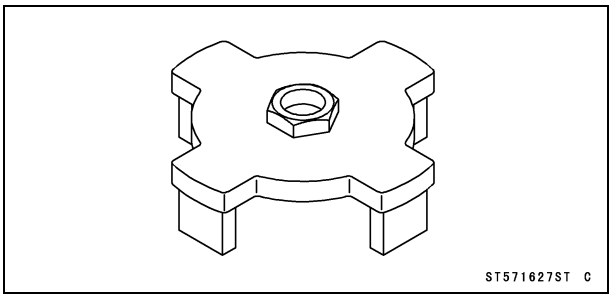

Drive Pulley Holder:
57001-1628

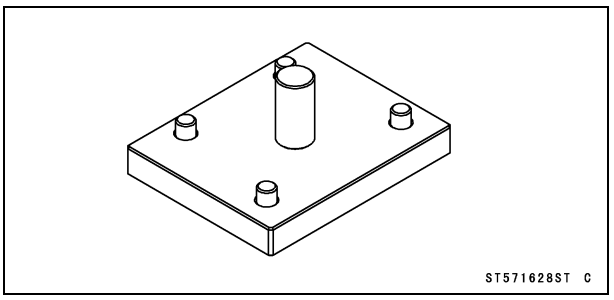

Driven Pulley Holder:
57001-1630

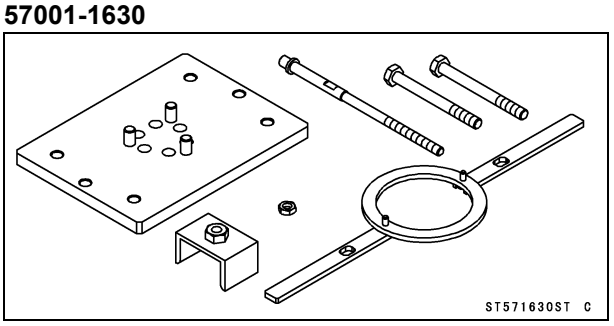

Liquid Gasket, TB1215:
92104-1065

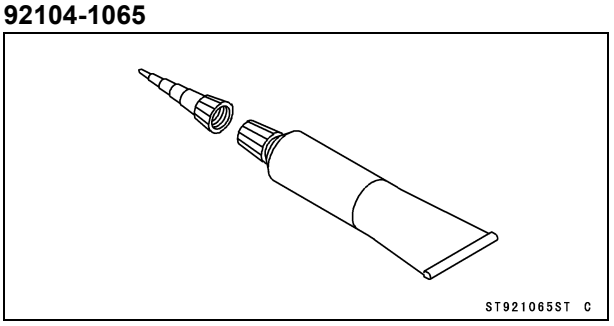

Air Cleaner

Air Cleaner Element Removal

KAF400-A1/B1 /C1 ~ AA/BA/CA Early Models

- Remove:
  Guard Plate (see Frame chapter)
  Wingbolts [A]
  Cap [B]

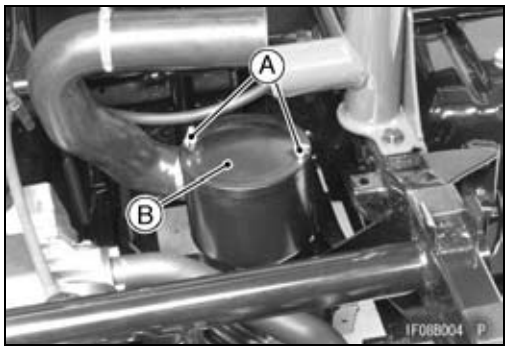

- Remove:
  Air Cleaner Element [A]
- After removing the element, stuff pieces of lint-free, clean cloth into the air cleaner duct to keep dirt out of the torque converter.

NOTICE
If dirt gets into the torque converter, excessive wear and loss of driving power may result.

KAF400AA/BA/CA Late Models ~

- Remove:
  Guard Plate (see Guard Plate Removal in the Frame chapter)
  Clamps [A] (Unhook)
  Cap [B]

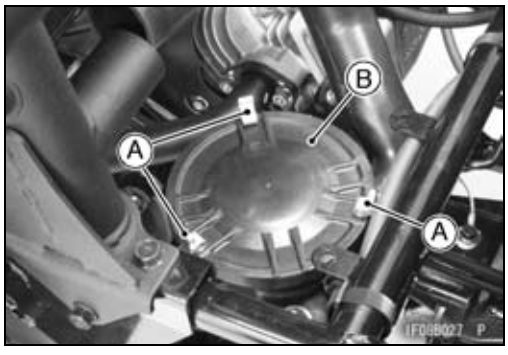

- Remove:
  Air Cleaner Element [A]
- After removing the element, stuff pieces of lint-free, clean cloth into the air cleaner duct to keep dirt out of the torque converter.

NOTICE
If dirt gets into the torque converter, excessive wear and loss of driving power may result.

Air Cleaner Element Cleaning/Inspection

- Refer to the Converter System in the Periodic Maintenance chapter.

Air Cleaner

Air Cleaner Housing Removal

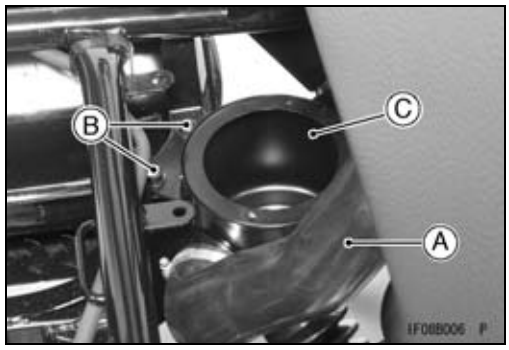

- Remove:
  Air Cleaner Element (see Air Cleaner Element Removal)
  Air Duct [A]
  Air Cleaner Housing Bolts [B]
  Air Cleaner Housing [C]
- After removing the housing, stuff pieces of lint-free, clean cloth into the torque converter cover duct to keep dirt out of the torque converter.

NOTICE
If dirt gets into the torque converter, excessive wear and loss of driving power may result.

Torque Converter

Torque Converter Removal

- Remove:
  Right Rear Wheel (see Wheels/Tires chapter)
  Right Rear Shock Absorber (see Suspension chapter)
  Right Side Cover (see Frame chapter)
  Cover Bolts [A]
  Torque Converter Cover [B] and Duct [C]

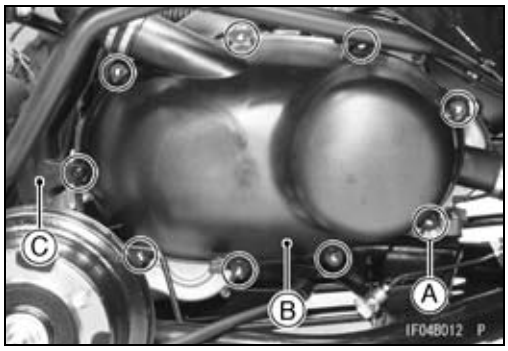

- Remove the two bolts [A], holding the drive pulley bolt [B] with a wrench.

○Be sure to remove the two bolts [A] in the positions shown. Note the two bolts are not relative position the arrow mark [C].

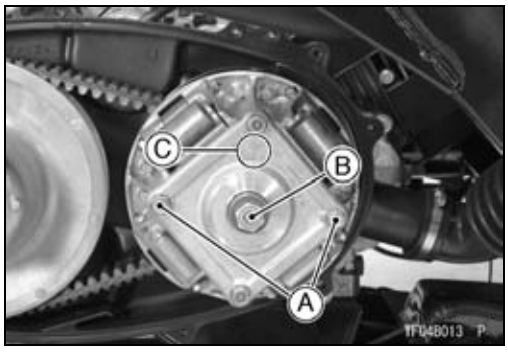

- Install the drive pulley holder [A].

  Special Tool - Drive Pulley Holder: 57001-1620

- Tighten the two bolts [B].

  Torque - Drive Pulley Cover Bolts: 23 N·m (2.3 kgf·m, 17 ft·lb)

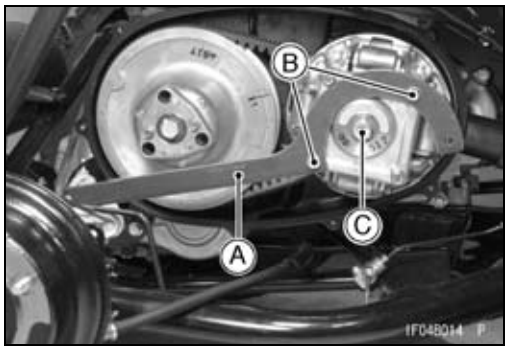

NOTICE
Be sure to install two bolts in the specified positions shown. Otherwise, the tapped holes will be damaged.

- Loosen the drive pulley bolt [C], holding the drive pulley with the drive pulley holder as shown.
- Remove:
  Drive Pulley Bolt
  Two Washers
  Stepped Washer

- Remove the drive pulley [A] from the crankshaft by screwing the drive pulley puller bolt [B] clockwise, while holding the drive pulley with the drive pulley holder [C] as shown.

  Special Tool - Drive Pulley Puller Bolt: 57001-1429

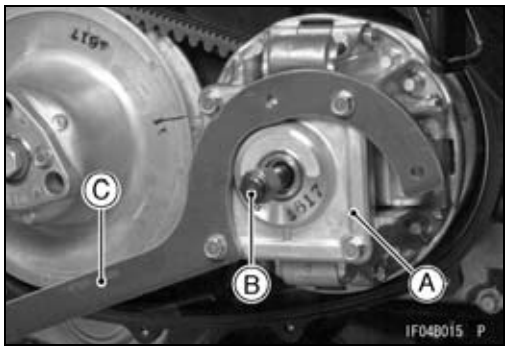

Torque Converter

NOTE

○*Before removing the drive belt, observe the direction the belt's printed information [A] (such as numbers, manufacture's name or arrow marks) is facing so that it may be reinstalled on the pulleys to rotate in the same direction as originally installed.*

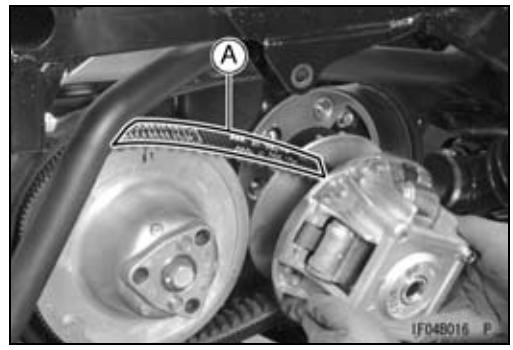

- Remove:
  Drive Pulley and Drive Belt

- Using the flywheel & pulley holder [A] and attachments [B], remove the driven pulley bolt [C] and washers.

  Special Tools - Flywheel & Pulley Holder: 57001-1605
  or 57001-1343
  Pulley Holder Attachment: 57001-1472

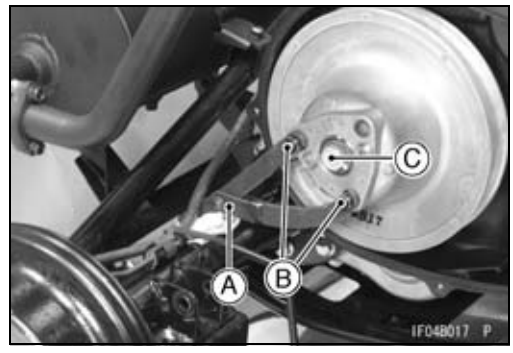

- Remove the driven pulley [A] from the transmission shaft by screwing the drive pulley puller bolt [B] clockwise, while holding the driven pulley with the flywheel & pulley holder [C] as shown.

  Special Tool - Drive Pulley Puller Bolt: 57001-1429

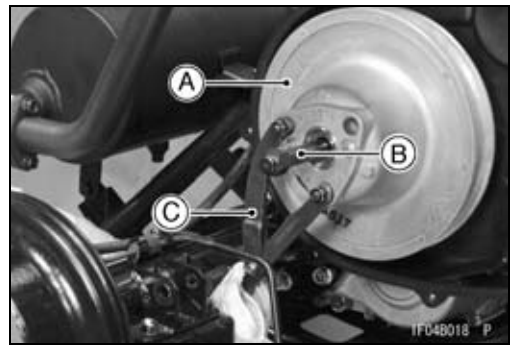

Torque Converter Installation

- Clean the following portions with an oil-less cleaning fluid such as trichloroethylene or acetone and blow off it by compressed air.

⚠ WARNING

These cleaning fluids are usually highly flammable and harmful if breathed for prolonged periods. Be sure to heed the fluid manufacturer's warnings.

Driven Pulley

Transmission Shaft Tapered Portion [A]
Transmission Shaft Threads Portion [B]
Movable Sheave Tapered Portion [C]
Driven Pulley Bolt Threads Portion [D]
Two Washers

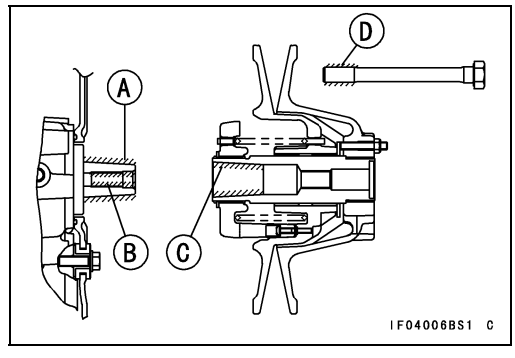

Torque Converter

Drive Pulley

Crankshaft Tapered Portion [A]
Crankshaft Threads Portion [B]
Fixed Sheave Tapered Portion [C]
Drive Pulley Bolt Threads Portion [D]
Two Washers

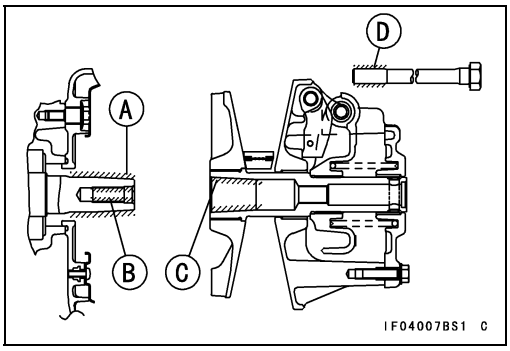

- Install:
  Driven Pulley
  Two Washers [A] (as shown)
  Transmission Case Side [B]
  Bolt Head Side [C]

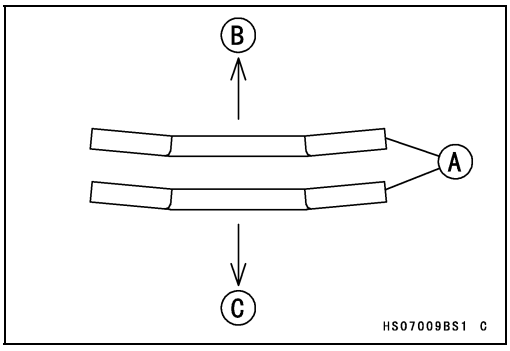

- Using the flywheel & pulley holder [A] and attachments [B], tighten the driven pulley bolt [C].

Special Tools - Flywheel & Pulley Holder: 57001-1605 or 57001-1343
Pulley Holder Attachment: 57001-1472

Torque - Driven Pulley Bolt: 70 N·m (7.1 kgf·m, 52 ft·lb)

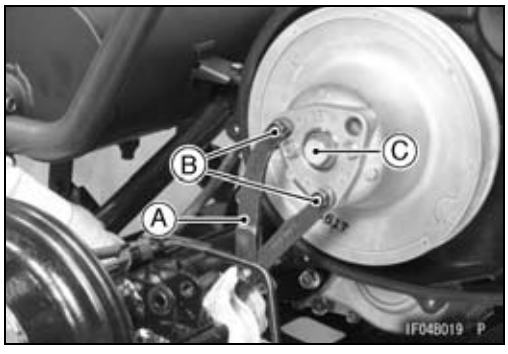

NOTICE

To avoid damage to the converter case, bolts, transmission case, transmission shaft oil seal, cam ramp, fixed sheave and movable sheave caused by overtightening the driven pulley bolt:
●Be sure to clean oil off the tapered portion of the transmission shaft and movable sheave.
●Never tighten the driven pulley bolt with an impact wrench. Use a torque wrench.

- Install:
  Drive Pulley [A] and Belt [B]

NOTE

○*Be sure the printed information [C] faces the same direction so the belt may rotate in the same direction as originally installed. When installing a new belt, install it so the printing can be read from outside the vehicle.*

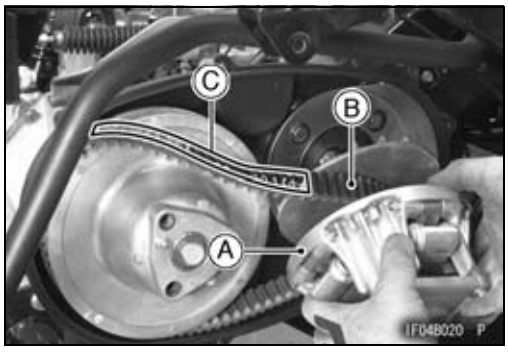

Torque Converter

- Replace the drive pulley bolt [A] with a new one.
- Install the two washers [B] and stepped washer [C] on the drive pulley bolt as shown.

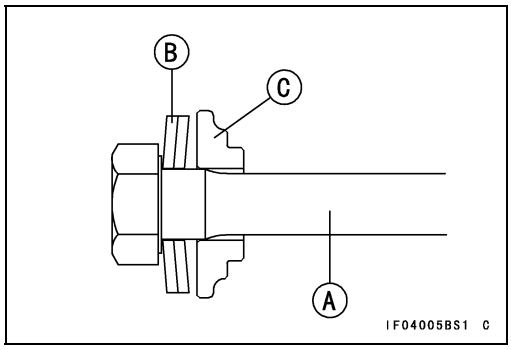

- Install the drive pulley holder [A] (see Torque Converter Removal).

  Special Tool - Drive Pulley Holder: 57001-1620

- Tighten the drive pulley bolt [B], holding the drive pulley with the drive pulley holder as shown.

  Torque - Drive Pulley Bolt: 94 N·m (9.6 kgf·m, 69 ft·lb)

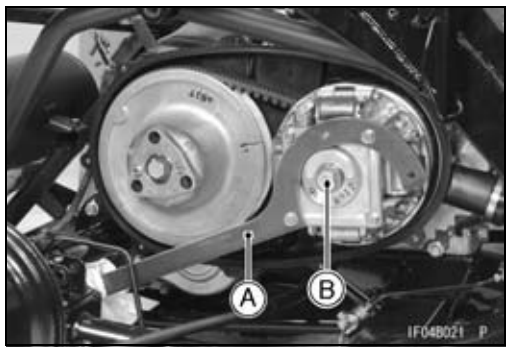

NOTICE
To avoid damage to the converter case bolts, steel cover, screws, and fixed shave caused by overtightening the drive pulley bolt. **●Be sure to clean oil off the tapered portion of the crankshaft and fixed shave.** **●Never tighten the drive pulley bolt with an impact wrench. Use a torque wrench.**

- Remove the drive pulley holder.
- Tighten the two bolts [A], holding the drive pulley bolt [B] with a wrench.

  Torque - Drive Pulley Cover Bolts: 23 N·m (2.3 kgf·m, 17 ft·lb)

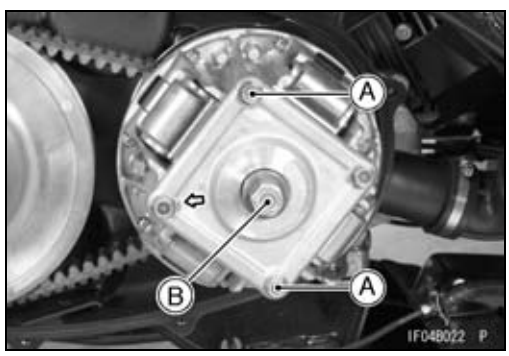

Torque Converter

- Set the slit [A] of duct to aligning mark [B].
- Install:
  Torque Converter Cover [C]
  Duct [D]
  Collar [E] (~ KAF400AA/BA/CA Early Models and KAF400DD/ED)
  Cover Bolts [F] (9)
  ~ KAF400AA/BA/CA Early Models [G]
  KAF400AD ~/BD ~ [H]

- Apply a non-permanent locking agent (LOCTITE 243) to the threads of the converter cover bolts (KAF400AA/BA/CA Late Models ~ KAF400AC/BC).
- Tighten:

Torque - Converter Cover Bolts (~ KAF400AA/BA/CA Early Models): 4.4 N·m (0.45 kgf·m, 39 in·lb)
Converter Cover Bolts (KAF400AA/BA/CA Late Models ~ KAF400AC/BC): 6.0 N·m (0.61 kgf·m, 53 in·lb)
Converter Cover Bolts (KAF400AD ~/BD ~): 8.8 N·m (0.90 kgf·m, 78 in·lb)

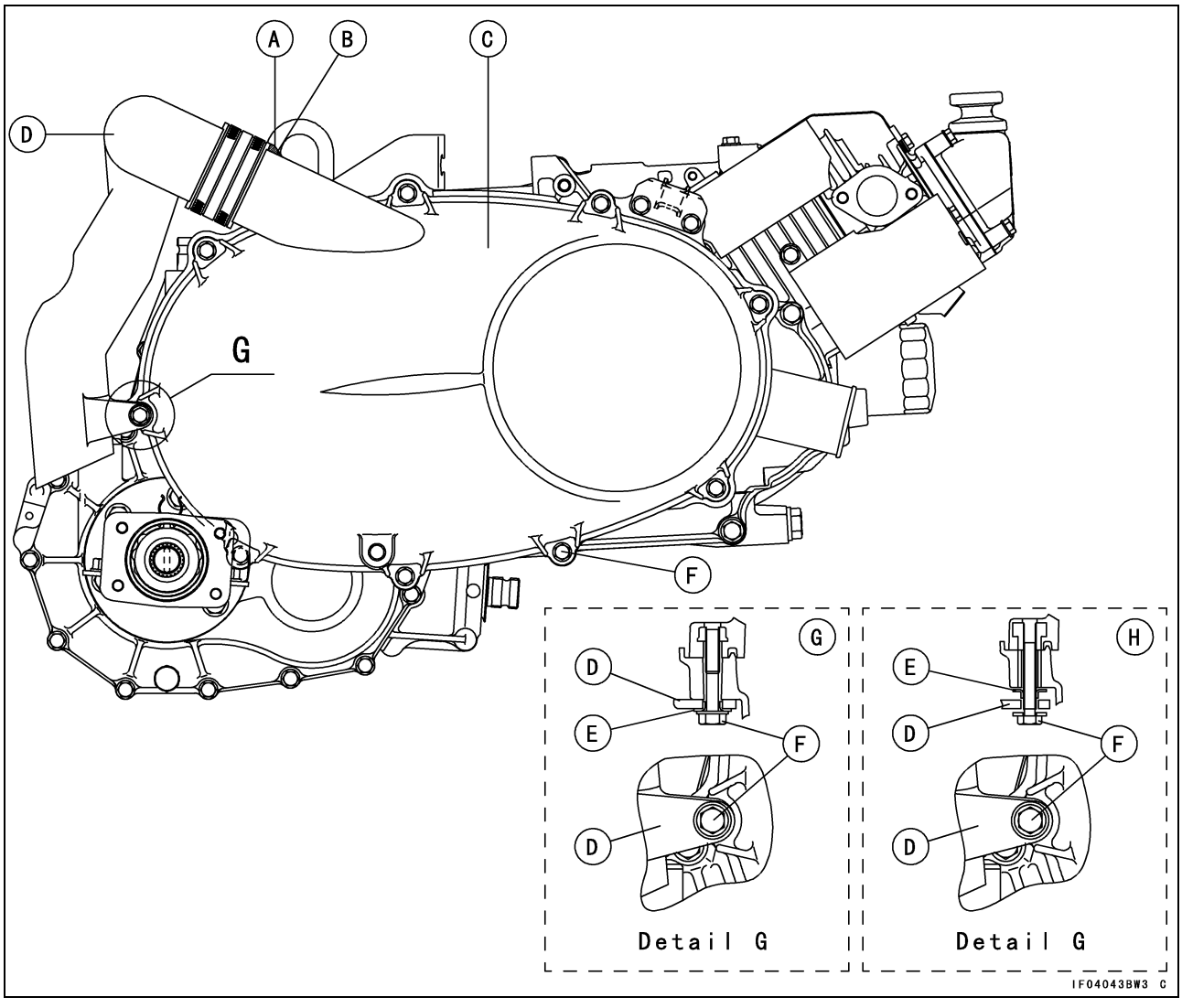

Torque Converter

Torque Converter Case Removal

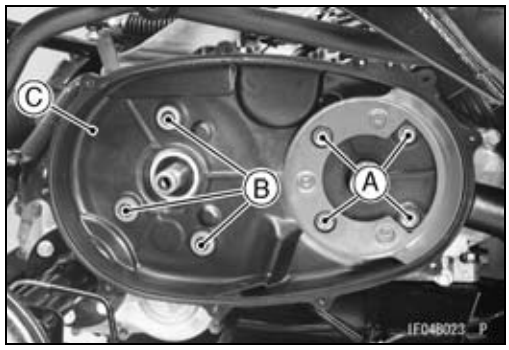

- Remove:
  Drive Pulley, Driven Pulley and Drive Belt (see Torque Converter Removal)
  Converter Case Front Bolts [A] and O-rings
  Converter Case Rear Bolts [B] and Washers
  Dampers and Collars
  Torque Converter Case [C]

Torque Converter Case Installation

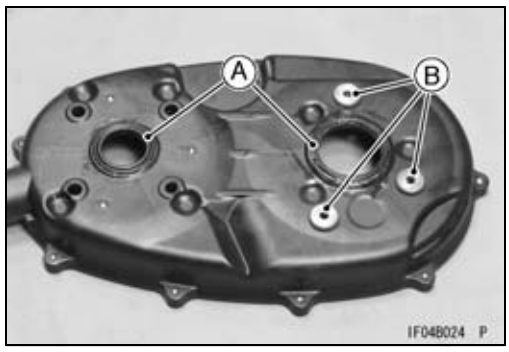

- Install:
  O-rings [A]
  Collars [B] and Dampers [C]

- (For KAF400AA/BA/CA Late Models ~) Apply liquid gasket [D] to the mating surface of the collars [B].

  Sealant - Liquid Gasket, TB1215: 92104-1065

- Install:
  Torque Converter Case
  Converter Case Front Bolts (26.5 mm, 1.04 in.) [E]
  O-rings [F]
  Washers [G]
  Converter Case Rear Bolts (25 mm, 0.98 in.) [H]
  Converter Case Cover [I]
  Screws [J]
- Set the trim seal juncture [K] in this area [L] when inserting the trim seal [M] in the torque converter case [N].
  [L] 40 mm (1.57 in.)
- Tighten:

  Torque - Converter Case Front Bolts: 20 N·m (2.0 kgf·m, 15 ft·lb)
  Converter Case Rear Bolts: 20 N·m (2.0 kgf·m, 15 ft·lb)
  Converter Case Cover Screws: 5.0 N·m (0.51 kgf·m, 44 in·lb)

- Install:
  Cable Holder
  Bolts
- Tighten:

  Torque - Cable Holder Bolts: 8.8 N·m (0.90 kgf·m, 78 in·lb)

Torque Converter

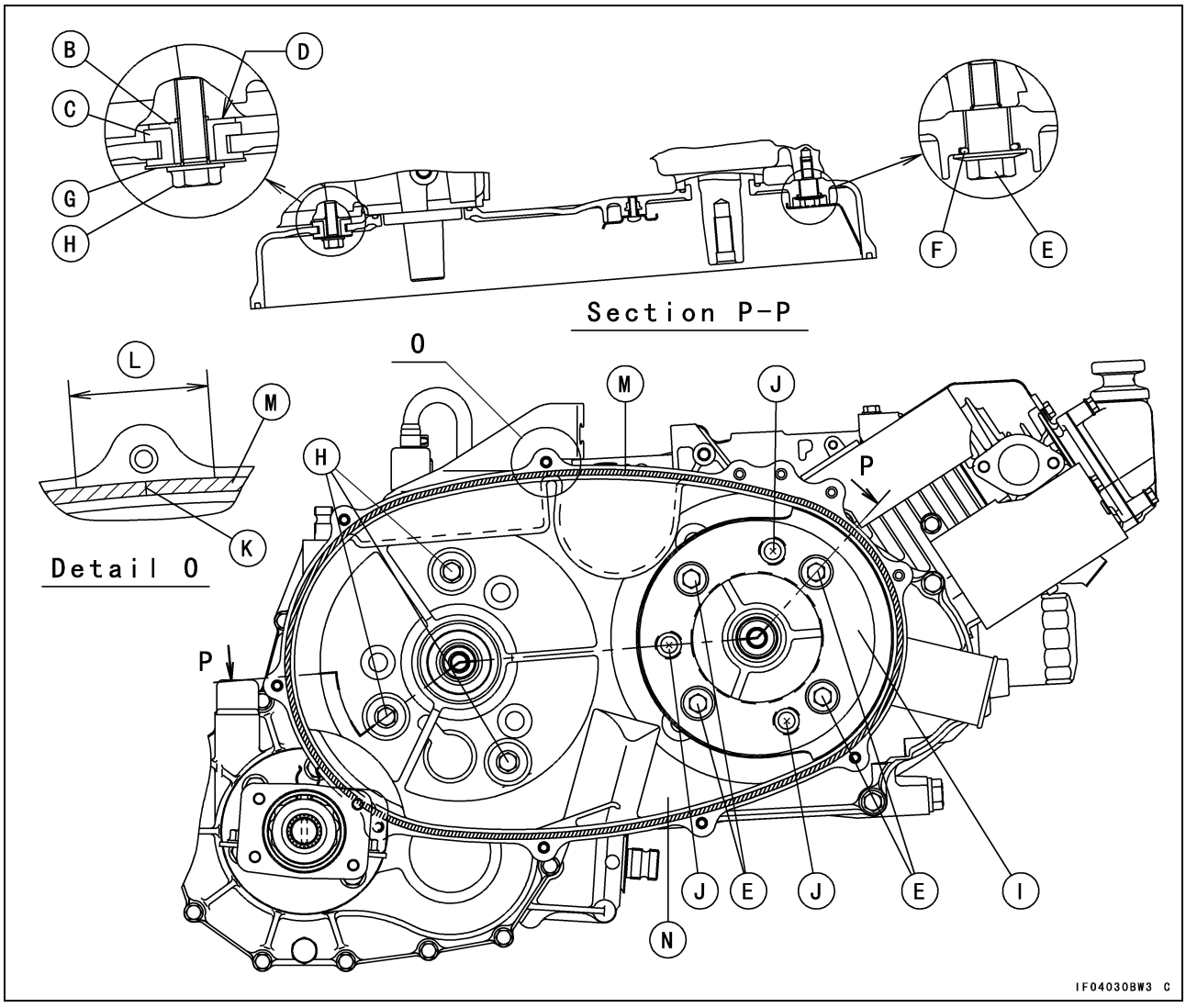

Drive Belt

Drive Belt Removal

- Refer to the Torque Converter Removal.

Drive Belt Installation

- Refer to the Torque Converter Installation.

Drive Belt Inspection

- Refer to the Converter System in the Periodic Maintenance chapter.

Drive Belt Deflection Inspection

- Refer to the Converter System in the Periodic Maintenance chapter.

Drive Belt Deflection Adjustment

- Refer to the Converter System in the Periodic Maintenance chapter.

Drive Pulley

Drive Pulley Removal

- Refer to the Torque Converter Removal.

Drive Pulley Disassembly

- Remove:
  Drive Pulley (see Torque Converter Removal)
- Hold the drive pulley holder [A] in a vise.

  Special Tool - Drive Pulley Holder: 57001-1628

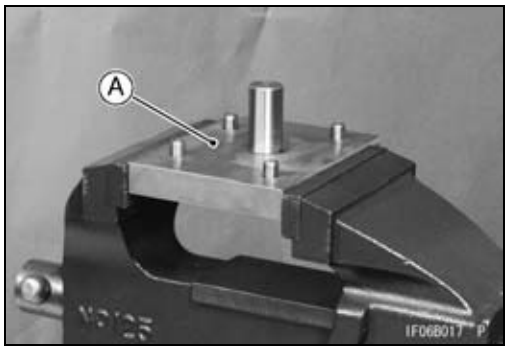

- Set the pulley onto the pulley holder.
- Remove:
  Drive Pulley Cover Bolts [A]
  Drive Pulley Cover [B]

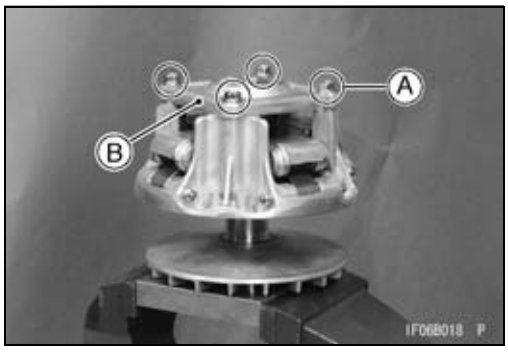

- Remove:
  Spring [A]
  Spacer

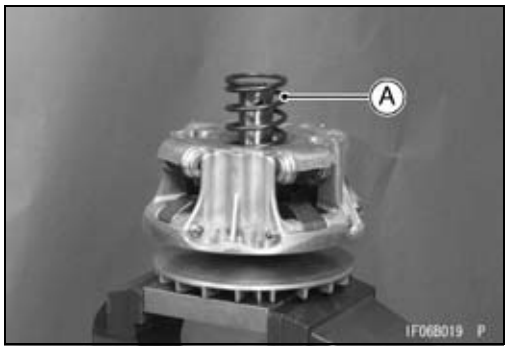

- Put the drive pulley wrench [A] on the spider [B].

  Special Tool - Drive Pulley Wrench: 57001-1627
- Turn the wrench counterclockwise and remove the spider with the movable sheave.

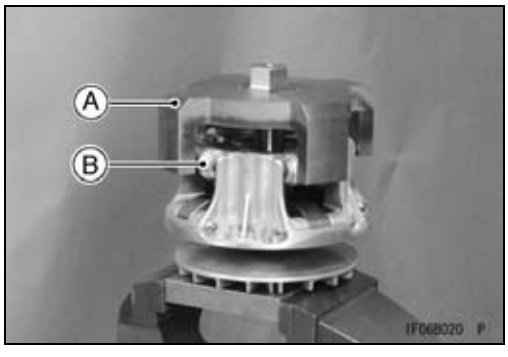

Drive Pulley

- Remove:
  Spider [A]
  Shoes [B]
  Nuts [C]
  Ramp Weight Pin [D]
  Ramp Weight [E]
  Movable Sheave [F]
  Fixed Sheave [G]

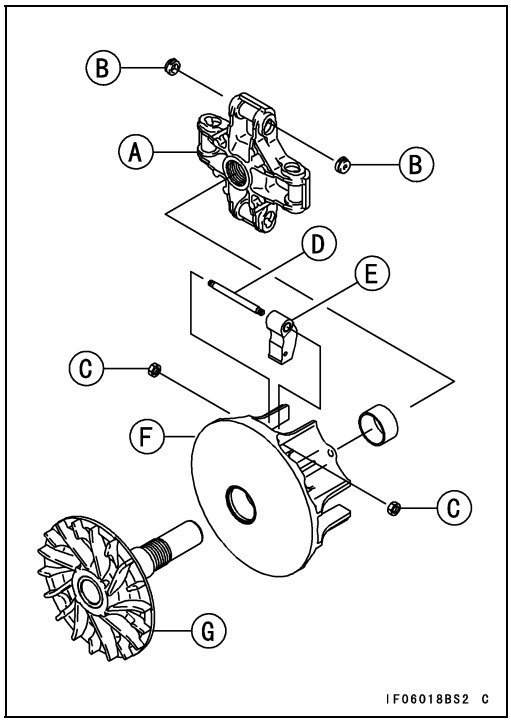

Drive Pulley Inspection

★If the sheave surfaces [A] appear damaged, replace the sheaves.

- Replace any sheave which has uneven wear on the belt contacting surface.
  Straight Edge [B]

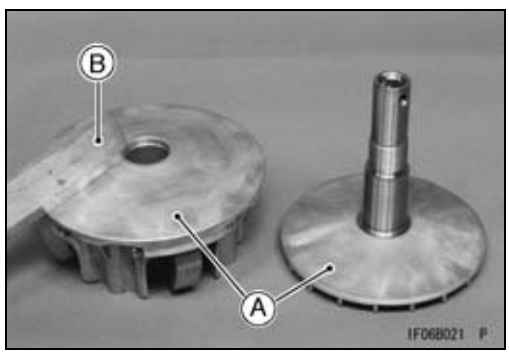

★If the cover bushing is damaged or worn, replace the drive pulley cover.

Cover Bushing Inside Diameter [A]
Standard: 28.005 ~ 28.089 mm (1.103 ~ 1.106 in.)
Service Limit: 28.3 mm (1.114 in.)

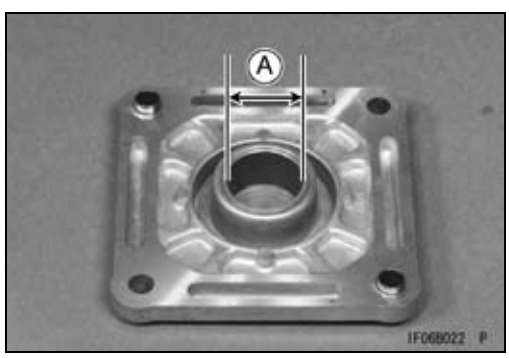

★If the sheave bushing is damaged or worn, replace it.

Sheave Bushing Inside Diameter [A]
Standard: 35.002 ~ 35.087 mm (1.378 ~ 1.381 in.)
Service Limit: 35.3 mm (1.390 in.)

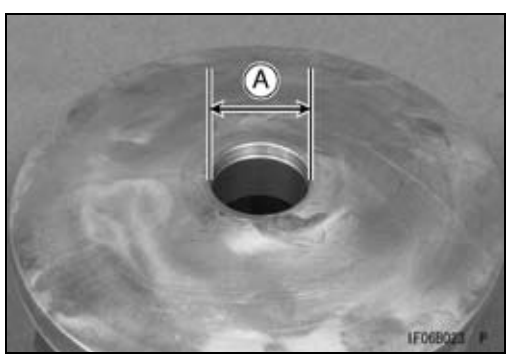

Drive Pulley

★If the spider shoes [A] are damaged, replace them.
- Check the spider shoe side clearance (see Spider Shoe Side Clearance Inspection).

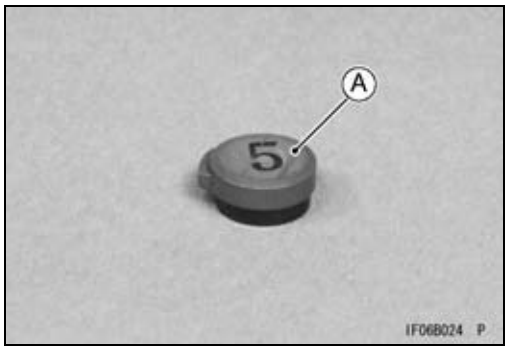

★If the ramp weights [A] are damaged or worn, replace them.
★If the pins [B] are damaged or worn, replace them.

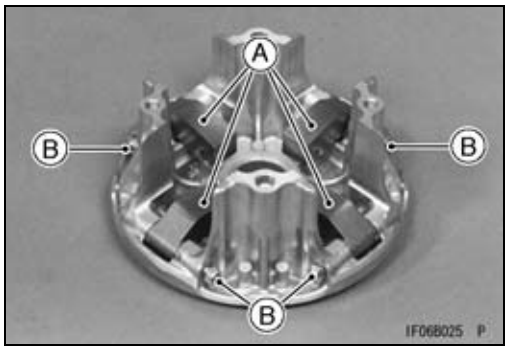

★If the rollers [A] are damaged or worn, replace the spider [B].
★If the washers [C] are damaged or worn, replace the spider.

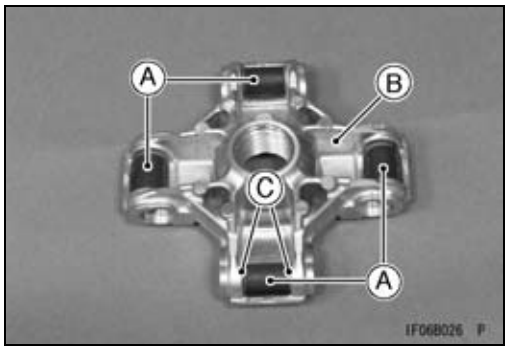

★If the spring is worn or damaged, replace the spring.

Spring Free Length [A]
Standard: 72 mm (2.83 in.)

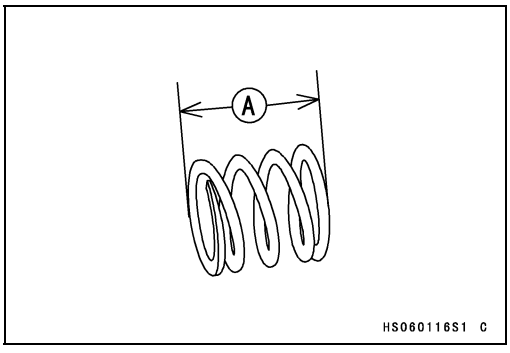

Spider Shoe Side Clearance Adjustment

- Remove:
  Drive Pulley (see Torque Converter Removal)
  Drive Pulley Cover and Spring (see Drive Pulley Disassembly)
- Set the drive pulley [A] without the spring onto the pulley holder [B] (see Drive Pulley Disassembly).

Special Tool - Drive Pulley Holder: 57001-1628

- Temporarily install:
  Dowel Pins (2)
  Drive Pulley Cover
  Two Bolts (at dowel pins)

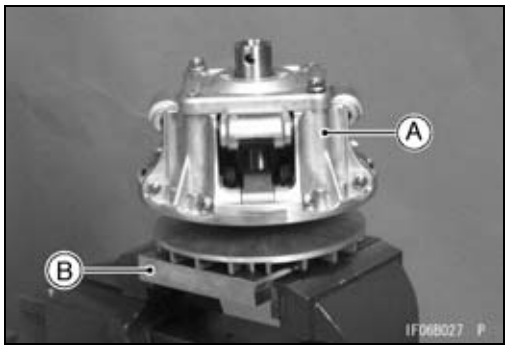

Drive Pulley

- Turn the movable sheave clockwise.
- Measure the resulting clearance [A] between the shoe [B] and the post [C] on the movable sheave at two points as shown.
  [D] Arrow Mark

Shoe Side Clearance
Standard: 0.05 ~ 0.20 mm (0.0020 ~ 0.0079 in.)

★The clearance is not within the specified range, replace all shoes with standard shoes (P/No. 49048-1090) (see Drive Pulley Disassembly).

- Tighten the spider lightly by hand.

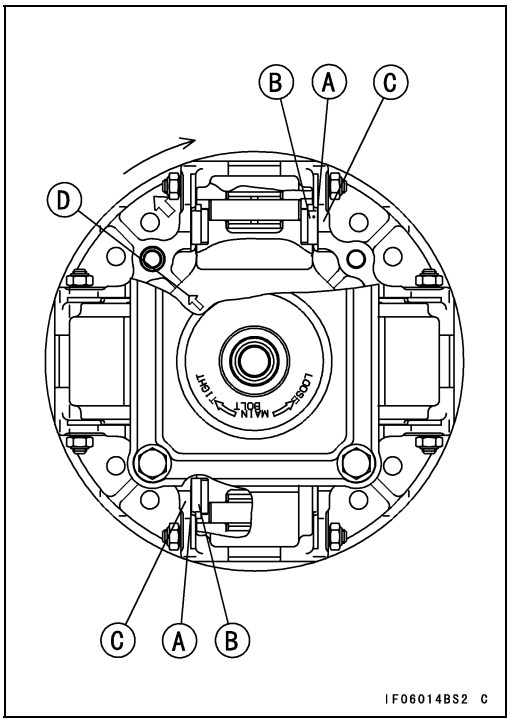

- Turn the movable sheave clockwise.
- Measure the resulting clearance [A] between the shoe [B] and the post [C] on the movable sheave at two positions as shown.
  [D] Arrow Mark

★If the clearance is not within the specified range, adjust it according to following chart.

Clearance Measurement	Present Shoes	
	Part Number	Thickness
up to 0.05 mm (0.0020 in.)	49048-1087	7.2 mm (0.283 in.)
	49048-1088	7.3 mm (0.287 in.)
	49048-1089	7.4 mm (0.291 in.)
over 0.05 to 0.20 mm (over 0.0020 to 0.0079 in.) (standard clearance)	no change 49048-1090	7.5 mm (0.295 in.)
over 0.20 mm (0.0079 in.)	49048-1091	7.6 mm (0.299 in.)
	49048-1092	7.7 mm (0.303 in.)
	49048-1093	7.8 mm (0.307 in.)
	49048-1094	7.9 mm (0.311 in.)
	49048-1095	8.0 mm (0.315 in.)

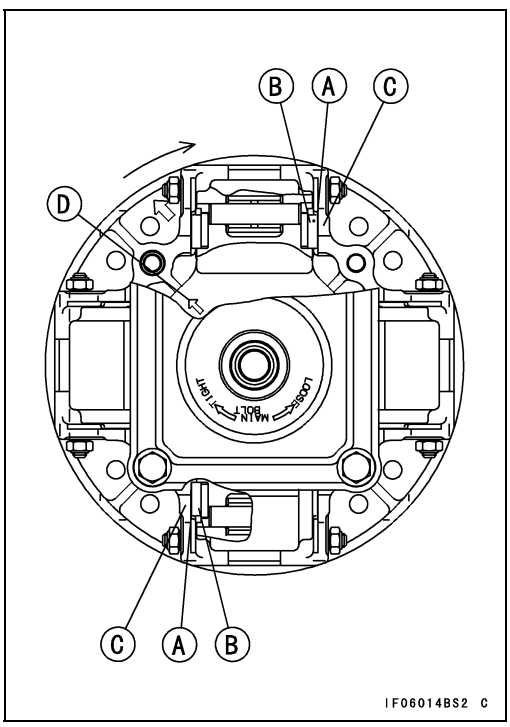

Drive Pulley

- Check that the movable sheave [A] moves smoothly, after the shoe side clearance adjustment.

○The movable sheave must move freely towards the fixed sheave [B].

★If the movable sheave does not move smoothly, readjust the shoe side clearance.

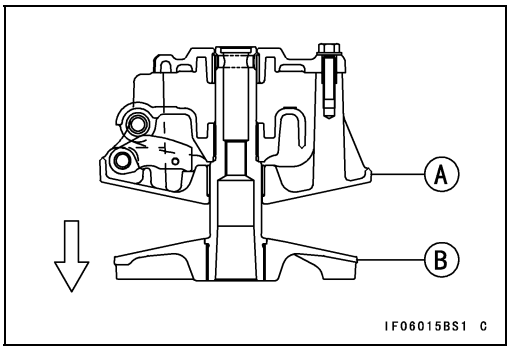

Bushing Installation

- Press the cover bushing [A] into the cover [B] using the special tool so that the end of bushing is flush with the shoulder [C] in the hole.

  Special Tool - Bearing Driver Set: 57001-1129

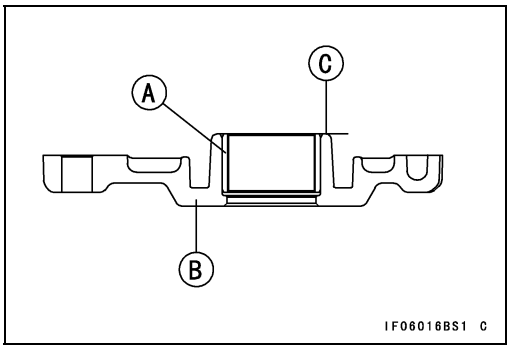

- Press the sheave bushing [A] into the movable sheave [B] using the special tool so that the end of bushing is flush with the shoulder [C] in the hole.

  Special Tool - Bearing Driver Set: 57001-1129

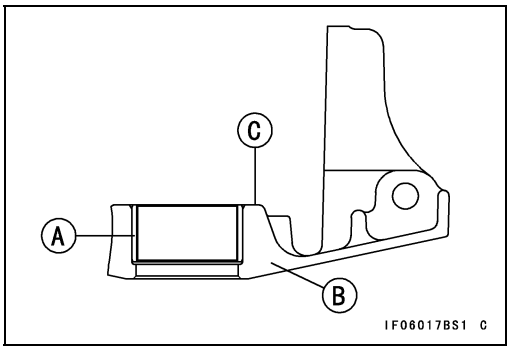

Drive Pulley Assembly

- Replace the weight pin nuts with new ones.
- Install the ramp weights [A] as shown.
- Tighten:

  Torque - Weight Pin Nuts [B]: 7.0 N·m (0.70 kgf·m, 61 in·lb)

- Check that the ramp weights swing smoothly.

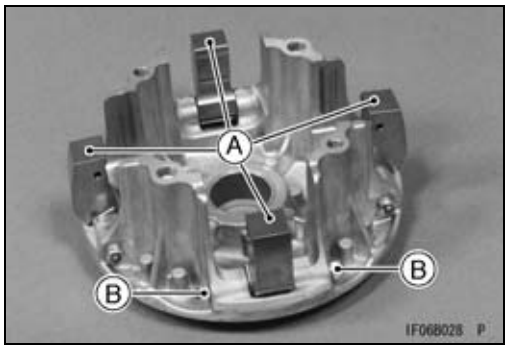

- Hold the fixed sheave [A] with the drive pulley holder [B] in a vise.

  Special Tool - Drive Pulley Holder : 57001-1628

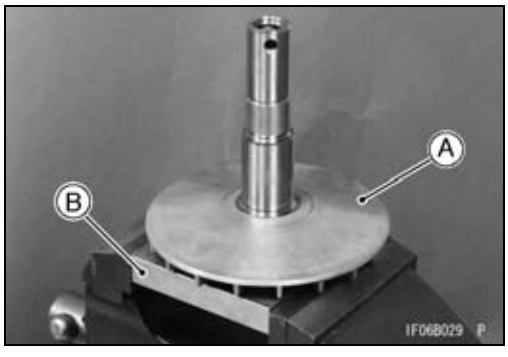

Drive Pulley

- Clean the threads of the fixed sheave and spider.
- Install:
  Movable Sheave
  Spider [A] and Wear Shoes [B]

○Align the arrow [C] on the spider with the arrow [D] on the movable sheave.
○Insert the shoes so that the rubber side faces inward.

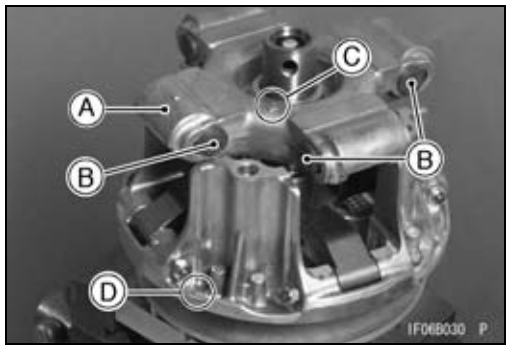

- Put the drive pulley wrench [A] on the spider [B].

  Special Tool - Drive Pulley Wrench: 57001-1627
- Turn the wrench for tightening.

  Torque - Spider: 275 N·m (28 kgf·m, 203 ft·lb)

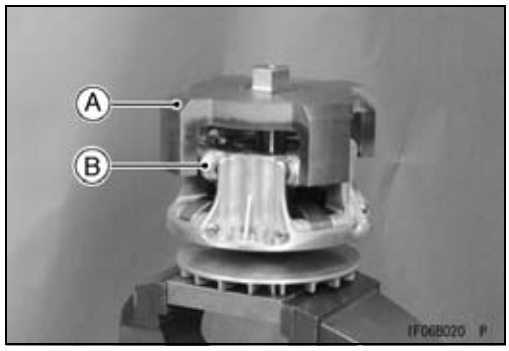

- Put the spring [A] in the groove of the spider.
- Align the arrows [B] on the drive pulley cover and spider.
- Install:
  Drive Pulley Cover [C]
- Tighten:

  Torque - Drive Pulley Cover Bolts: 23 N·m (2.3 kgf·m, 17 ft·lb)
- Clean the surface of the sheaves with an oil-less cleaning fluid.

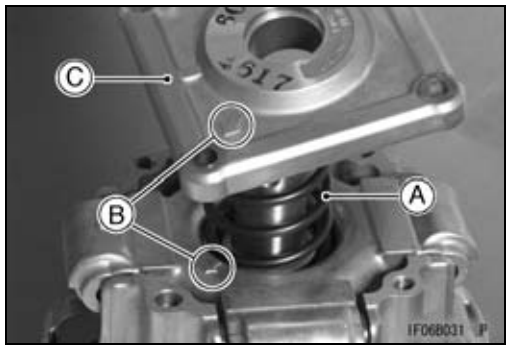

Drive Pulley Installation

- Refer to the Torque Converter Installation.

Driven Pulley

Driven Pulley Removal

- Refer to the Torque Converter Removal.

Driven Pulley Disassembly

- Hold the driven pulley holder [A] with a suitable C clamps [B] as shown.

  Special Tool - Driven Pulley Holder: 57001-1630

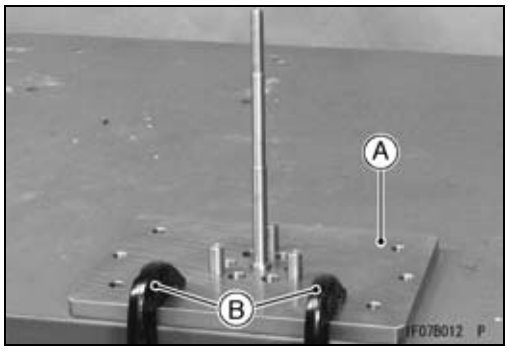

- Put the driven pulley [A] and spring holder [B] on the holder.
- Tighten the nut [C], and compress the spring with the spring holder.

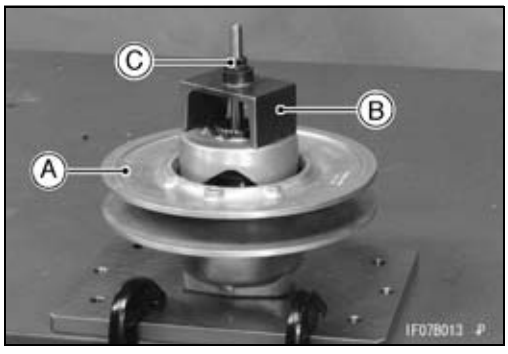

- Remove the circlip [A] with circlip pliers [B].

  Special Tool - Outside Circlip Pliers: 57001-144

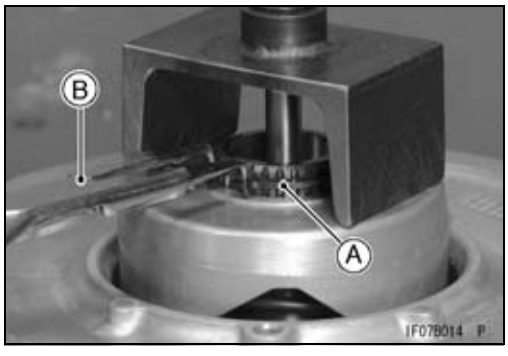

- Remove:
  Nut [A]
  Spring Holder [B]
  Circlip [C]

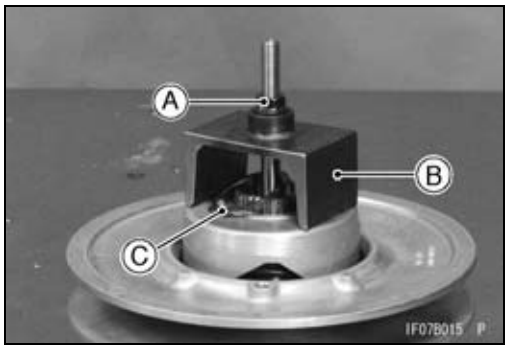

Driven Pulley

- Remove:
  Ramp [A]
  Spring [B]
  Movable Sheave [C]
  Spacer [D]
  Fixed Sheave [E]

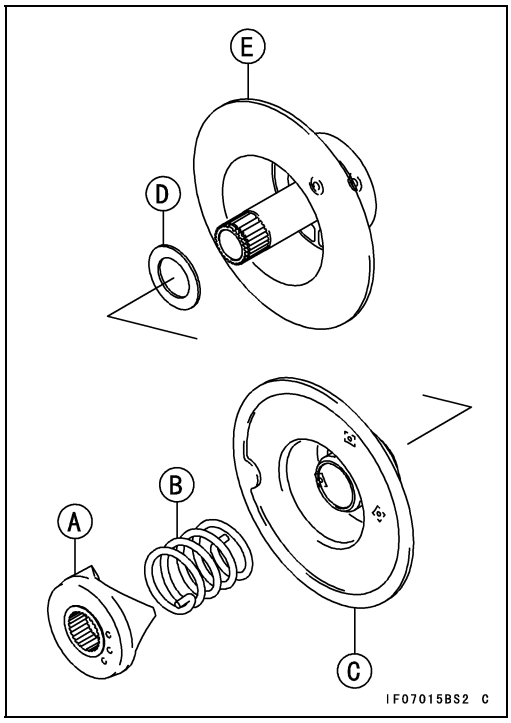

★If the ramp [A] does not come off easily, face the ramp downward and tap it lightly.

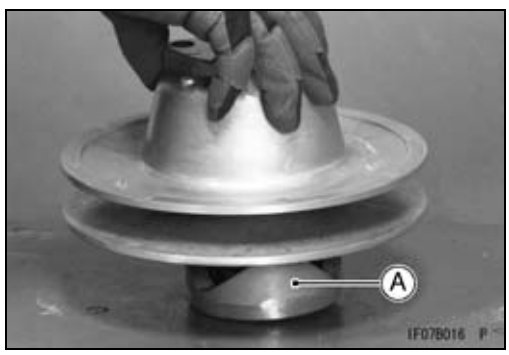

- Remove:
  Screws [A]
  Wear Shoes [B]
  Bolts [C]
  Shims [D]

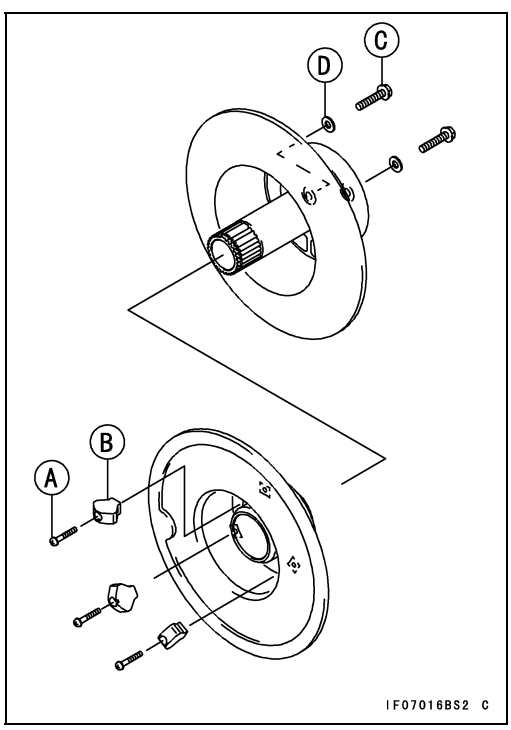

Driven Pulley

Driven Pulley Inspection

★If the sheave surfaces [A] appear damaged, replace the sheaves.

● Replace any sheave which has uneven wear on the belt contacting surface.
  Straight Edge [B]

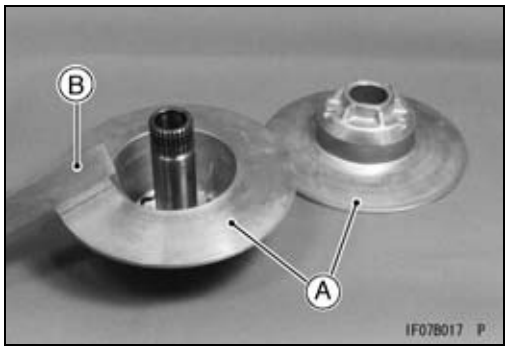

★If the guide bushings [A] are damaged or worn, replace the movable sheave.

Sheave Bushing Inside Diameter
Standard: 38.016 ~ 38.100 mm (1.497 ~ 1.500 in.)
Service Limit: 38.3 mm (1.51 in.)

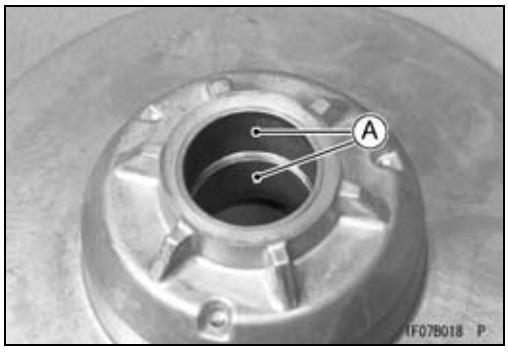

★If the splines [A] of the fixed sheave [B] and ramp [C] are damaged or worn, replace them.

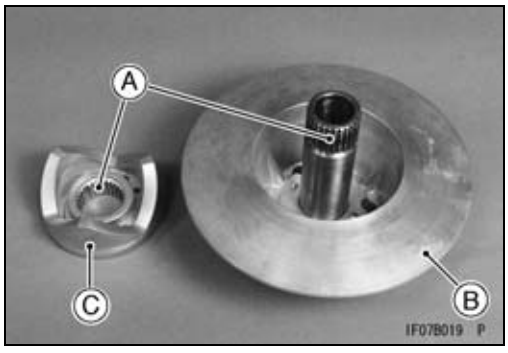

★If the spring is damaged or worn, replace the spring.

Spring Free Length [A]
Standard: 105 mm (4.13 in.)

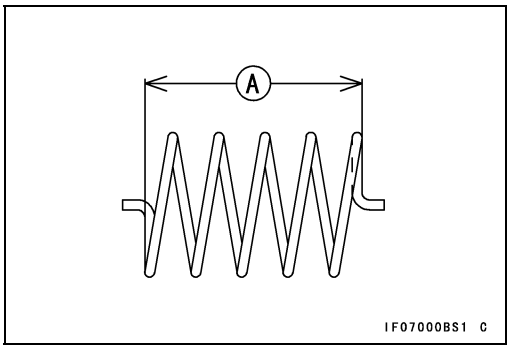

Converter Driven Pulley Shoe Inspection

● Refer to the Converter System in the Periodic Maintenance Chapter.

Driven Pulley

Bushing Installation

- Press the movable sheave bushings [A] into the movable sheave [B] using the special tool so that the end of bushing are flush with the shoulder [C] in the holes.

  Special Tool - Bearing Driver Set: 57001-1129

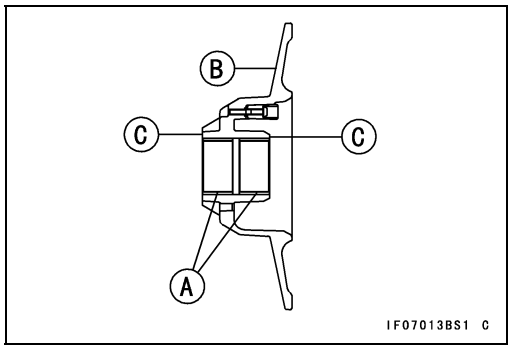

Driven Pulley Assembly

- Install the wear shoes [A] on the movable sheave as follows.

○The wear shoe must be installed so that the grooves [B] on the shoe faces inside.

- Apply a non-permanent locking agent to the wear shoe mounting screws [C].
- Tighten:

  Torque - Driven Wear Shoe Mounting Screws: 1.1 N·m (0.11 kgf·m, 9.7 in·lb)

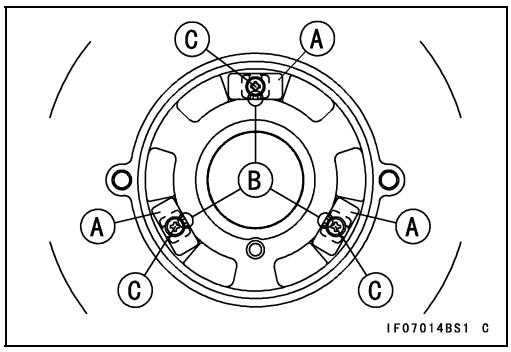

- Hold the fixed sheave with the driven pulley holder.

  Special Tool - Driven Pulley Holder: 57001-1630

- Install the spacer [A] on the fixed sheave [B].

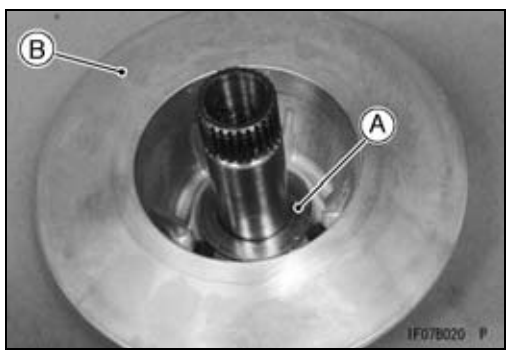

- Install:
  Movable Sheave [A]
  Spring [B]

○Insert the spring end into the hole [C] on the movable sheave.

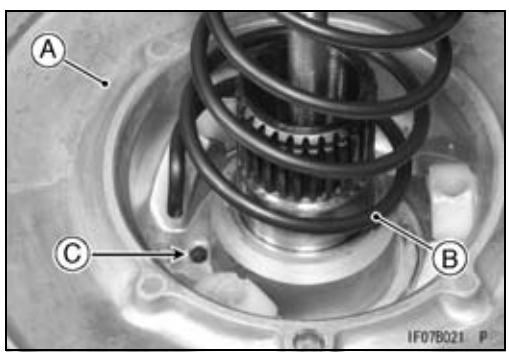

- Install the ramp [A] on the fixed sheave shaft.
- Insert the spring end [B] into the hole “2” on the ramp.
- Align the flat portions [C] of spline on the fixed sheave and ramp.

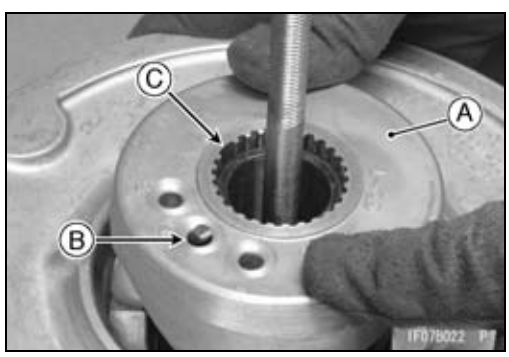

Driven Pulley

- Put the circlip [A] on the ramp.
- Install the spring holder [B].
- Push down the ramp halfway by tightening the nut [C].

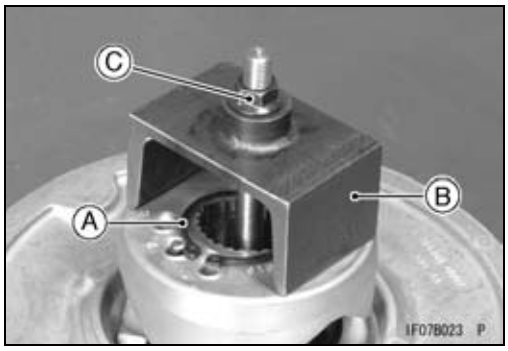

- Turn the movable sheave [A] counterclockwise 120° with the driven pulley holder [B].

  Special Tool - Driven Pulley Holder: 57001-1630

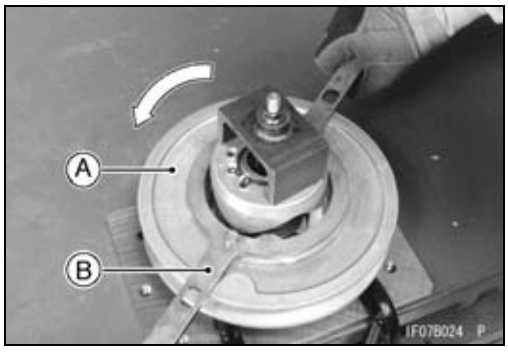

- Tighten the holder bolts [A], and hold the movable sheave [B].

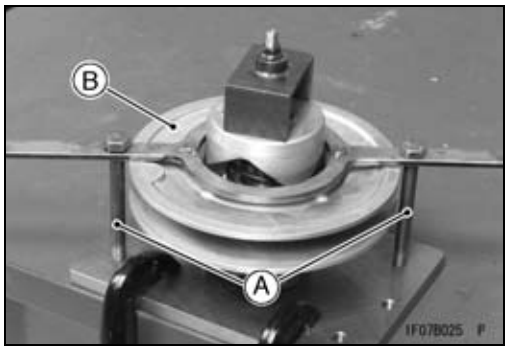

- Tighten the nut [A] until the groove of the circlip is seen.
- Install the circlip [B].

  Special Tool - Outside Circlip Pliers: 57001-144

- Release the movable sheave slowly until it stops naturally.

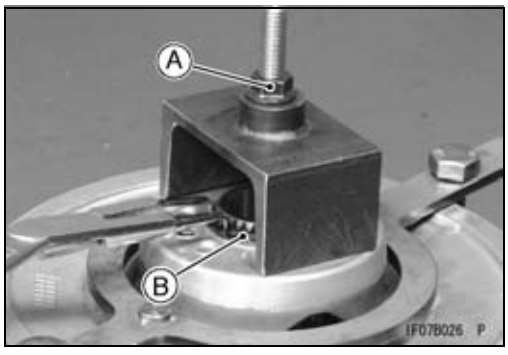

Driven Pulley Installation

- Refer to the Torque Converter Installation.

High Altitude Setting Information

Specifications

Altitude m (ft)	Drive Pulley	Carburetor
	Ramp Weights	Main Jet
0 ~ 500 (0 ~ 1 600)	P/No. 39152-0011 (STD, Type C)	#112 (P/No. 92063-7045) (STD)
500 ~ 1 500 (1 600 ~ 4 900)	P/No. 39152-0011 (STD, Type C)	#109 (P/No. 92063-7044)
1 500 ~ 2 500 (4 900 ~ 8 200)	P/No. 39152-0014 (Type C155)	#105 (P/No. 92063-7013)
2 500 ~ 3 500 (8 200 ~ 11 500)	P/No. 39152-0014 (Type C155)	#102 (P/No. 92063-7014)
3 500 ~ 4 500 (11 500 ~ 14 800)	P/No. 39152-0014 (Type C155)	#99 (P/No. 92063-2458)

C, C155: Identification Marks

- Refer to the Drive Pulley section in this chapter and Carburetor section in the Fuel System chapter for the parts replacement.

Engine Lubrication System

Table of Contents

Exploded View 6-2
Specifications 6-4
Engine Oil Flow Chart 6-5
Engine Oil and Oil Filter 6-6
- Oil Level Inspection 6-6
- Engine Oil Change 6-7
- Oil Filter Replacement 6-7

Oil Pump, Relief Valve 6-8
- Oil Pump Removal 6-8
- Oil Pump Installation 6-8
- Oil Pump Inspection 6-8
- Relief Valve Removal 6-9
- Relief Valve Installation 6-10
- Relief Valve Inspection 6-10

Oil Screen 6-11
- Oil Screen Removal 6-11
- Oil Screen Installation 6-11
- Oil Screen Cleaning/Inspection 6-11

Oil Temperature Sensor (KAF400-A/C) 6-12
- Oil Temperature Sensor Removal 6-12
- Oil Temperature Sensor Installation 6-12

Exploded View

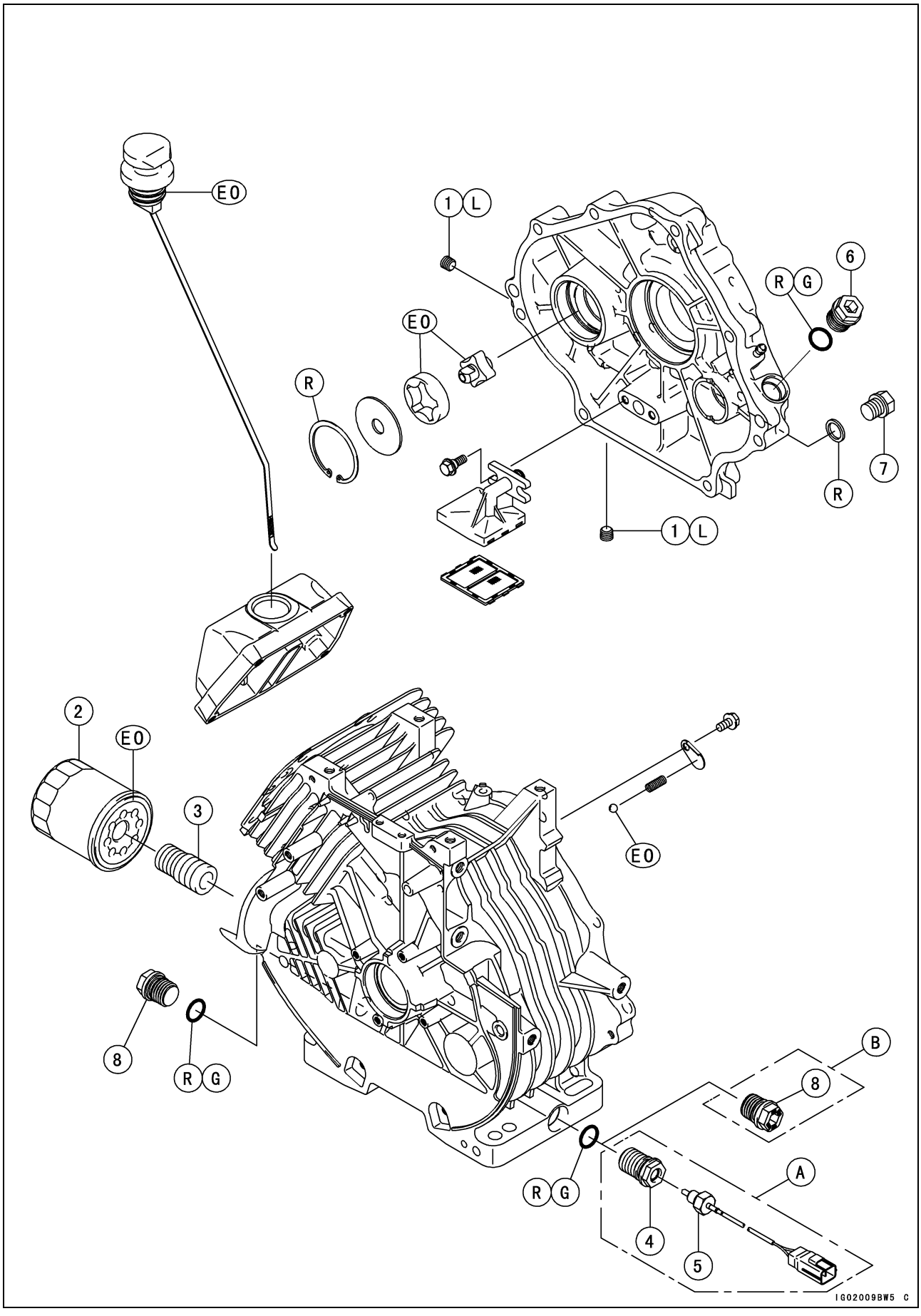

Exploded View

No.	Fastener	Torque			Remarks
		N·m	kgf·m	ft·lb	
1	Oil Line Plugs	3.9	0.40	34 in·lb	L
2	Oil Filter	9.8	1.0	87 in·lb	
3	Oil Filter Joint	6.9	0.70	61 in·lb	
4	Joint (KAF400-A/C)	7.4	0.75	65 in·lb	
5	Oil Temperature Sensor (KAF400-A/C)	5.4	0.55	48 in·lb	
6	Oil Plug	6.9	0.70	61 in·lb	
7	Engine Oil Drain Plugs	20	2.0	14	
8	Engine Oil Drain Plug (Nylon)	6.9	0.70	61 in·lb	

EO: Apply engine oil.
G: Apply grease.
L: Apply a non-permanent locking agent to the threads.
R: Replacement Parts

A: KAF400A/C
B: KAF400B

Specifications

Item	Standard	Service Limit
Engine Oil and Oil Filter		
Engine Oil:		
Type	API SG, SH, SJ, SL or SM with JASO MA, MA1 or MA2	– – –
Viscosity	SAE10W-40	– – –
Capacity	1.1 L (1.16 US qt) (when filter is not removed)	– – –
	1.3 L (1.37 US qt) (when filter is removed)	– – –
Oil Level	Between L and H lines on dipstick	– – –
Oil Pump and Relief Valve		
Inner Rotor/Outer Rotor Clearance	Less than 0.14 mm (0.006 in.)	0.20 mm (0.0079 in.)
Outer Rotor Outside Diameter	40.53 ~ 40.56 mm (1.5957 ~ 1.5968 in.)	40.47 mm (1.5933 in.)
Outer Rotor Thickness	9.98 ~ 10.00 mm (0.3929 ~ 0.3937 in.)	9.94 mm (0.3913 in.)
Pump Housing Inside Diameter	40.680 ~ 40.701 mm (1.6016 ~ 1.6024 in.)	40.801 mm (1.6063 in.)
Pump Housing Depth	10.03 ~ 10.08 mm (0.3949 ~ 0.3968 in.)	10.16 mm (0.4000 in.)
Pump Shaft Outside Diameter	12.695 ~ 12.715 mm (0.4998 ~ 0.5006 in.)	12.645 mm (0.4978 in.)
Pump Shaft Bearing Inside Diameter	12.735 ~ 12.750 mm (0.5014 ~ 0.5020 in.)	12.811 mm (0.5044 in.)
Relief Valve Spring Free Length	16.5 mm (0.6496 in.)	15.7 mm (0.618 in.)

Engine Oil Flow Chart

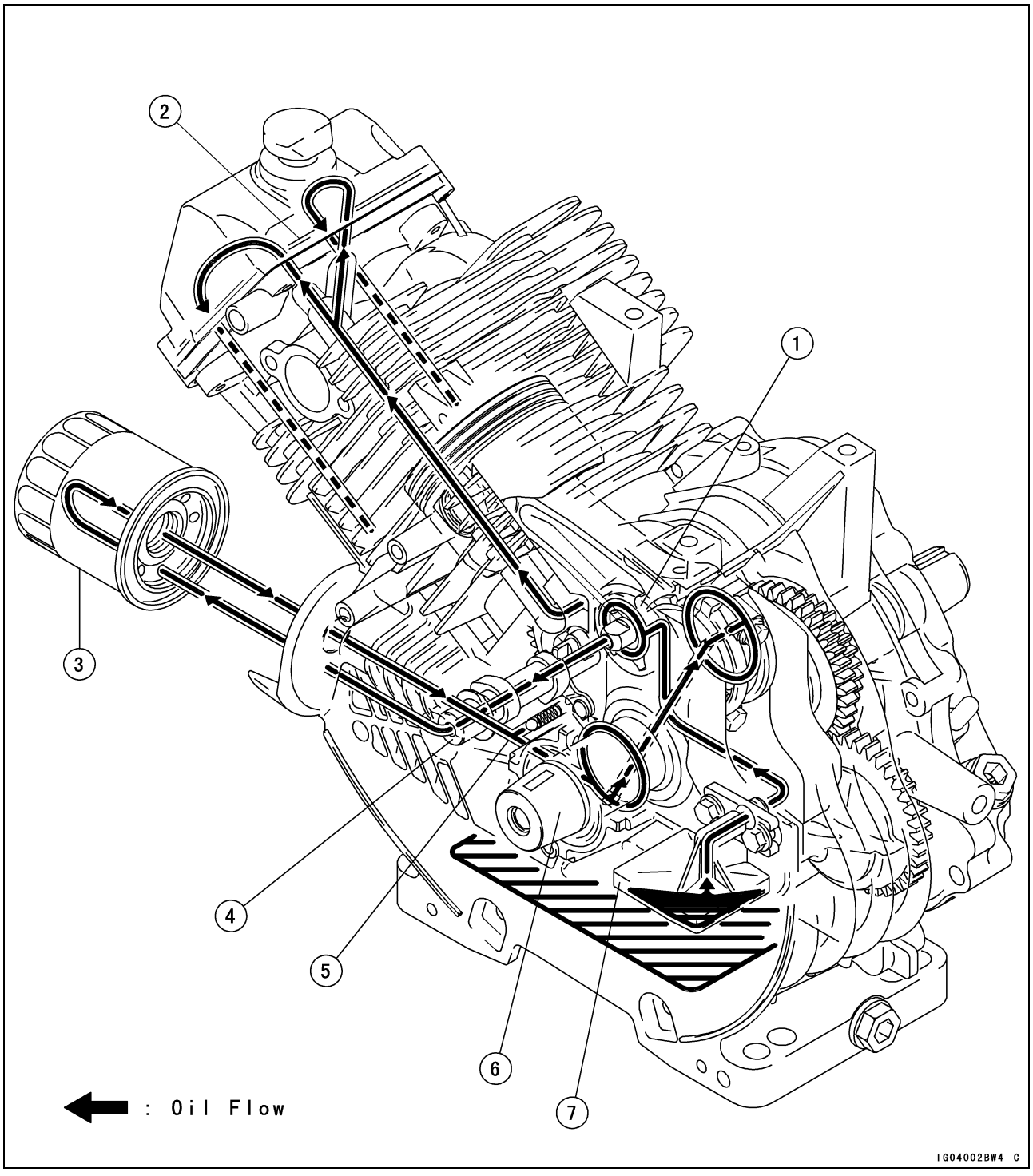

1. Oil Pump
2. Rocker Arms
3. Oil Filter
4. Camshaft
5. Relief Valve
6. Crankshaft
7. Oil Screen

Engine Oil and Oil Filter

⚠ WARNING

Vehicle operation with insufficient, deteriorated, or contaminated engine oil will cause accelerated wear and may result in engine seizure, accident, and injury. Check the oil level before each use and change the oil and filter according to the periodic maintenance chart.

Oil Level Inspection

NOTE

○*If the vehicle has just been used, wait several minutes for all the oil to drain down.*

○*If the oil has just been changed, start the engine and run it for several minutes at idle speed. This fills the oil filter with oil. Stop the engine, then wait several minutes until the oil settles.*

NOTICE

Racing the engine before the oil reaches every part can cause engine seizure.

- Park the vehicle on level ground, and tilt up the seat.
- Remove:
  Cap
- Pull out the oil level gauge [A] and wipe it dry.

- Apply engine oil to the rubber seal lip [A] on the dipstick.

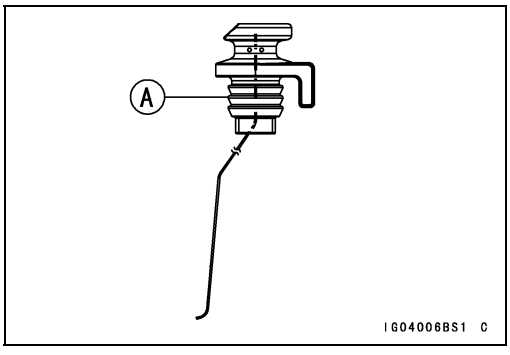

Engine Oil and Oil Filter

- Insert the oil level gauge into the oil filler hole securely.

NOTICE
Always insert the oil level gauge into the oil filler hole so that the taper part [A] of the cap is facing rearwards.

- Pull out the oil level gauge and check the oil level. The oil level should be between the “H” (High) and “L” (Low) lines [A] on the dipstick.

★If the oil level is too high, remove the excess oil, using a syringe or some other suitable device, or removing the engine oil drain plug, drain the excess oil.

★If the oil level is too low, add the correct amount of oil through the oil filler hole. Use the same type and make of oil that is already in the engine.

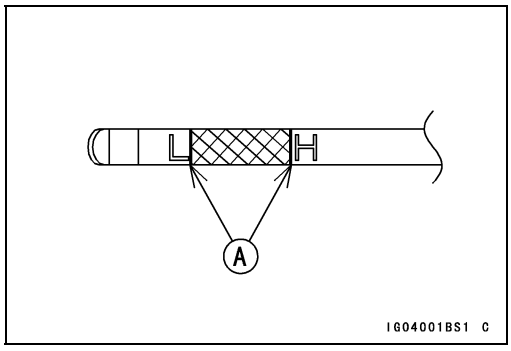

NOTE

○*If the engine oil type and make are unknown, use any brand of the specified oil to top up the level in preference to running the engine with the oil level low. Then at your earliest convenience, change the oil completely.*

- Install the oil level gauge securely.

Engine Oil Change

- Refer to the Engine Oil Change section in the Periodic Maintenance chapter.

Oil Filter Replacement

- Refer to the Oil Filter Replacement section in the Periodic Maintenance chapter.

Oil Pump, Relief Valve

Oil Pump Removal

- Remove the crankcase cover (see Crankcase Cover Removal in the Camshaft/Crankshaft chapter).
- Remove the circlip [A] and oil pump assembly (pump cover plate, inner rotor, outer rotor).

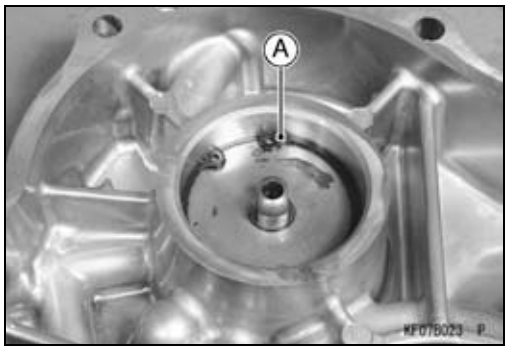

Oil Pump Installation

- Fill the rotor housing with engine oil for initial lubrication.
- Install the pump assembly and circlip in the crankcase cover.

○Install the circlip [A] with the tapered side out [B], as shown in figure.

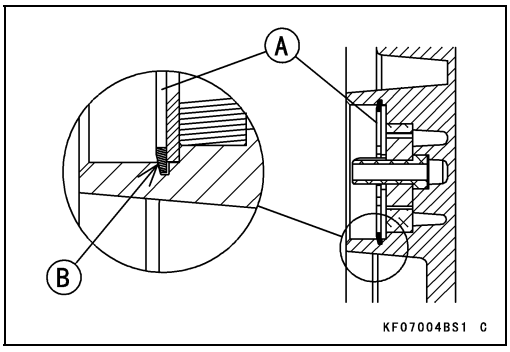

Oil Pump Inspection

- Remove the oil pump (see Oil Pump Removal in this chapter).
- Visually inspect the pump gear, outer and inner rotor, and cover plate.

★If there is any damage or uneven wear, replace them.

○Check the clearance [A] between the inner and outer rotor with a feeler gauge. Measure the clearance between the high point of the inner rotor and the high point of the outer rotor.

★If the measurement exceed the service limit, replace the rotors as a set.

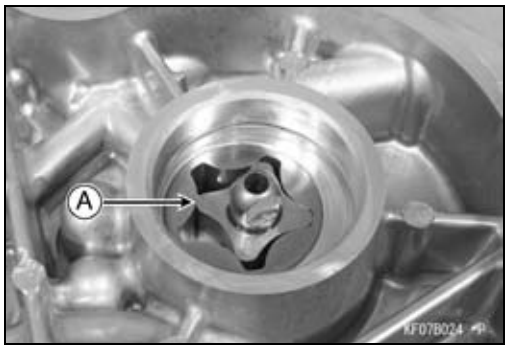

Inner and Outer Rotor Clearance

Standard: Less than 0.14 mm (0.006 in.)

Service Limit: 0.20 mm (0.00787 in.)

- Measure the outside diameter [A] of the outer rotor with a micrometer at several points.

★If the rotor diameter is less than the service limit, replace both the inner and outer rotor.

Outer Rotor Outside Diameter

Standard: 40.53 ~ 40.56 mm (1.5957 ~ 1.5968 in.)

Service Limit: 40.47 mm (1.5933 in.)

- Measure the thickness [B] of the outer rotor with a micrometer at several points.

★If the rotor thickness is less than the service limit, replace both the inner and outer rotor.

Outer Rotor Thickness

Standard: 9.98 ~ 10.00 mm (0.3929 ~ 0.3937 in.)

Service Limit: 9.94 mm (0.3913 in.)

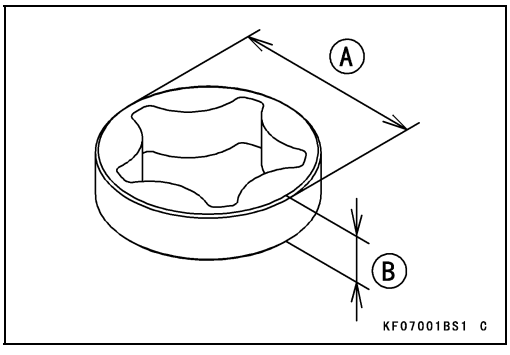

Oil Pump, Relief Valve

- Measure the inside diameter [A] of the pump housing with an inside micrometer at several points.

★If the inside diameter is more than the service limit, replace the crankcase cover.

Pump Housing Inside Diameter
Standard: 40.680 ~ 40.701 mm (1.6016 ~ 1.6024 in.)
Service Limit: 40.801 mm (1.6063 in.)

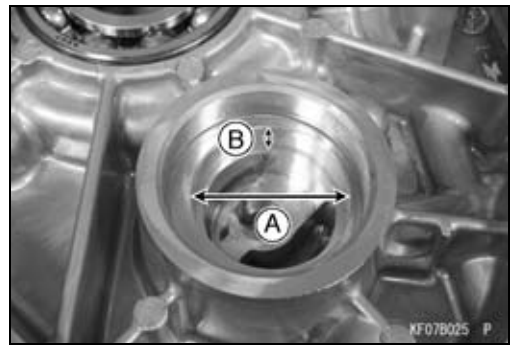

- Measure the depth [B] of the pump housing with a depth micrometer at several points.

★If any of measurement is more than the service limit, replace the crankcase cover.

Pump Housing Depth
Standard: 10.03 ~ 10.08 mm (0.3949 ~ 0.3968 in.)
Service Limit: 10.16 mm (0.4000 in.)

- Measure the outside [A] diameter of the pump shaft with a micrometer at several points.

★If the diameter is less than the service limit, replace the pump shaft.

Pump Shaft Outside Diameter
Standard: 12.695 ~ 12.715 mm (0.4998 ~ 0.5006 in.)
Service Limit: 12.645 mm (0.4978 in.)

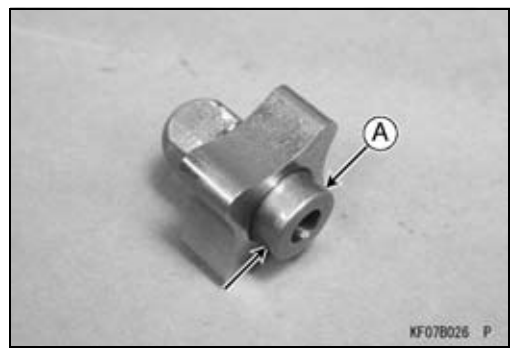

- Measurer the inside diameter [A] of the pump shaft bearing in the crankcase cover with a inside micrometer at several points.

★If the inside diameter is more than the service limit replace the crankcase cover.

Pump Shaft Bearing Inside Diameter
Standard: 12.735 ~ 12.750 mm (0.5014 ~ 0.5020 in.)
Service Limit: 12.811 mm (0.5044 in.)

Relief Valve Removal

- Remove:
  Camshaft (see Camshaft, Tappet Removal in the Engine Bottom End chapter)
  Relief Valve Cover Bolt [A]
  Relief Valve Cover [B]

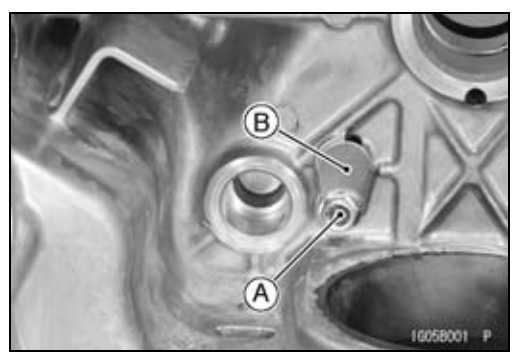

Oil Pump, Relief Valve

Relief Valve Installation

- Install:
  Relief Valve Ball [A]
  Spring [B]
  Relief Valve Cover
  Relief Valve Cover Bolt

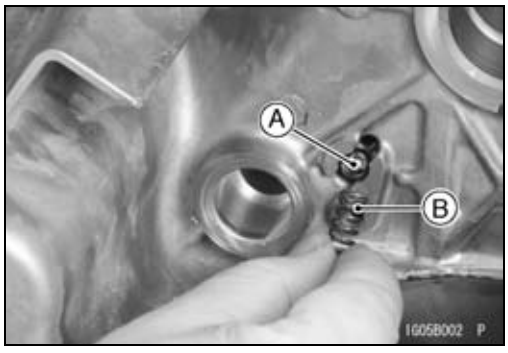

Relief Valve Inspection

- Visually inspect the relief valve spring, steel ball and valve seat in the crankcase.

★If any rough spots are found during above inspection, wash the valve clean with a high flash-point solvent and blow out any foreign particles that may be in the valve with compressed air.

⚠ WARNING

Gasoline and low flash-point solvents can be flammable and/or explosive and cause severe burns. Clean the parts in a well-ventilated area, and take care that there is no spark or flame anywhere near the working areas. Do not use gasoline or low flash-point solvents to clean parts..

★If cleaning does not solve the problem, replace the relief valve parts.

★If necessary, put the ball in position and lightly tap the ball with a suitable tools to form a perfect seat.

- Measure free length [A] of the spring with a vernier caliper.

★If the free length of the spring is less than the service limit, replace the spring.

Relief Valve Spring Free Length

Standard:	**16.5 mm (0.6496 in.)**
Service Limit:	**15.7 mm (0.618 in.)**

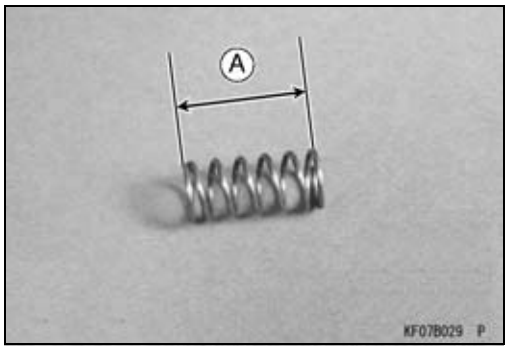

Oil Screen

Oil Screen Removal

- Remove:
  Engine
  Crankcase Cover (see Engine Bottom End chapter)
  Oil Screen Bolts [A]
  Pipe [B]
- Push [C] the oil screen with thumbs and remove it.

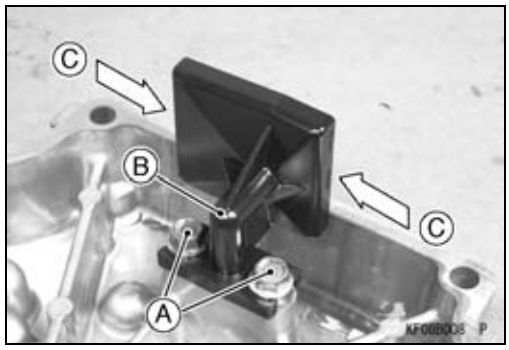

Oil Screen Installation

- Clean the oil screen thoroughly whenever it is removed for any reason.
- Insert the oil screen [A] into slots [B] in the pipe [C], and install the pipe on the crankcase cover with the mounting bolts and spacers.

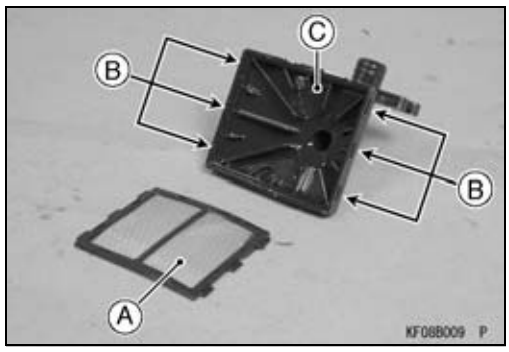

Oil Screen Cleaning/Inspection

- Clean the oil screen [A] with high flash-point solvent and remove any particles stuck to it.

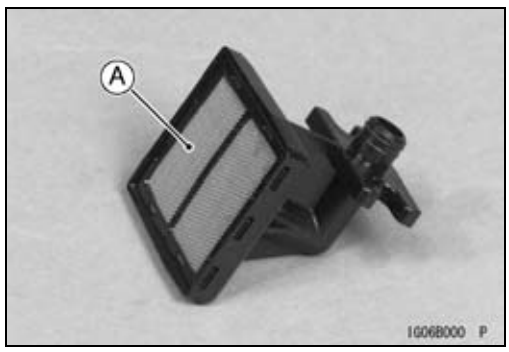

⚠ WARNING

Gasoline and low flash-point solvents can be flammable and/or explosive and cause severe burns. Clean the screen in a well-ventilated area, and take care that there are no sparks or flame anywhere near the working area; this includes any appliance with a pilot light. Do not use gasoline or a low flash-point solvent to clean the screen.

NOTE

○*While cleaning the screen, check for any metal particles that might indicate internal engine damage.*

- Check the screen carefully for any damage: holes and broken wire.

★If the screen is damaged, replace it.

Oil Temperature Sensor (KAF400-A/C)

Oil Temperature Sensor Removal

- Remove:
  Engine oil (drain, see Engine Oil Change in the Periodic Maintenance chapter)
  Sensor Lead Connector
  Oil Temperature Sensor [A]

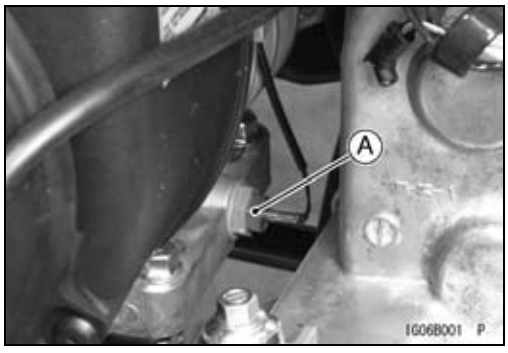

Oil Temperature Sensor Installation

- Apply engine oil to the O-ring on the sensor.
- Tighten:

Torque - Oil Temperature Sensor [A]: 5.4 N·m (0.55 kgf·m, 48 in·lb)
Joint [B]: 7.4 N·m (0.75 kgf·m, 65 in·lb)

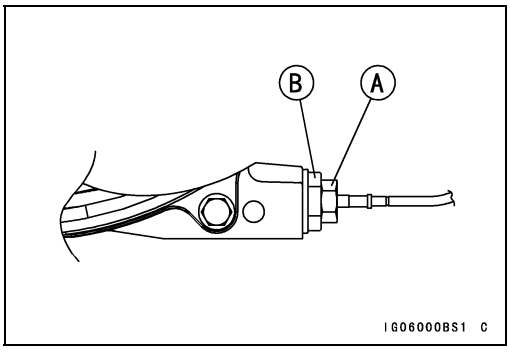

Engine Removal/Installation

Table of Contents

Exploded View 7-2
Special Tool 7-4
Engine Removal/Installation 7-5
Engine Removal 7-5
Engine Installation 7-6

Exploded View

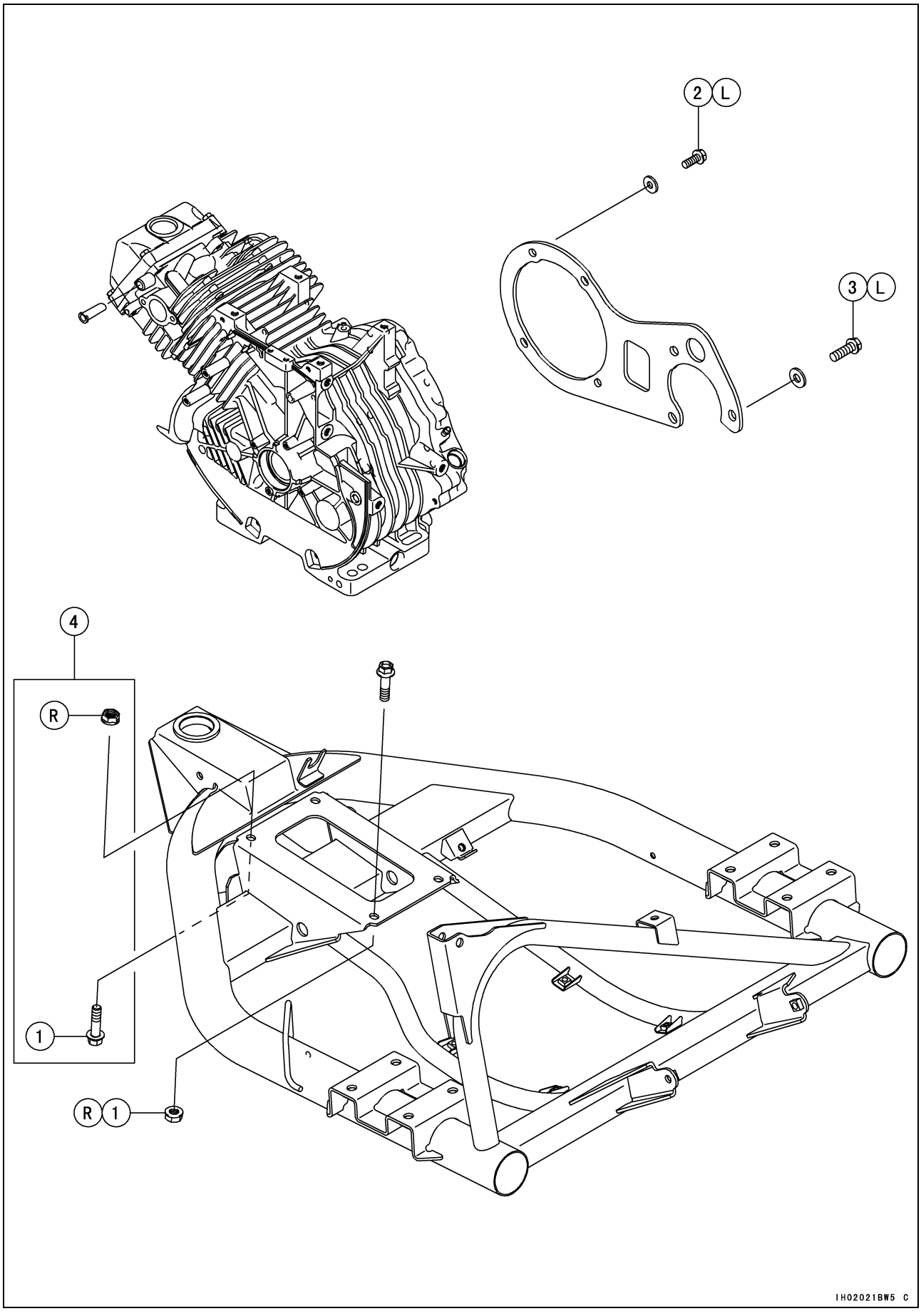

Exploded View

No.	Fastener	Torque			Remarks
		N·m	kgf·m	ft·lb	
1	Engine Mounting Bolts and Nuts	40	4.1	30	R
2	Connecting Plate Bolts (M8)	28	2.9	21	L
3	Connecting Plate Bolts (M10)	55	5.6	41	L

4. KAF400AB ~/BB ~
L: Apply a non-permanent locking agent.
R: Replacement Parts

Special Tool

Assembly Jig:
57001-1631

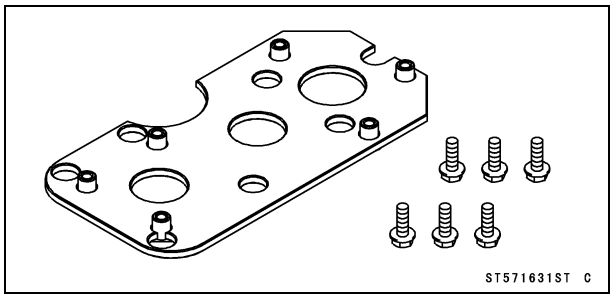

Engine Removal/Installation

Engine Removal

● Disconnect:
Battery Terminal Cables (see Electrical System chapter)

● Remove:
Cargo Bed
Guard Plate (see Frame chapter)
Exhaust Pipe (see Engine Top End chapter)
Torque Converter Case (see Converter System chapter)
Connecting Plate (see Transmission Case in the Transmission chapter)
Carburetor (see Fuel System chapter)
Link Bracket [A]

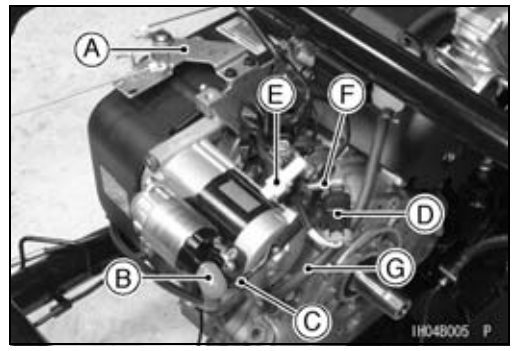

● Disconnect:
Starter Motor Cable [B] and Connector [C]
Alternator Lead Connector [D]
Ignition Coil Lead Connector [E]
Oil Temperature Sensor Lead Connector [F]
Hose [G]

● Remove:
Engine Mounting Bolts and Nuts [A] (both sides)
Engine Ground Lead [B] (KAF400-A1 ~ AA/B1 ~ BA/C1 ~ CA)

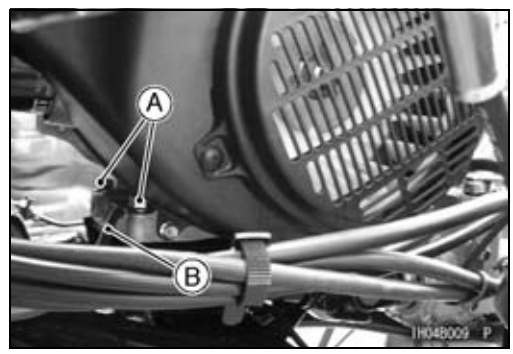

(KAF400AB ~/BB ~)
Engine Ground Lead Bolt [A]
Engine Ground Lead [B]

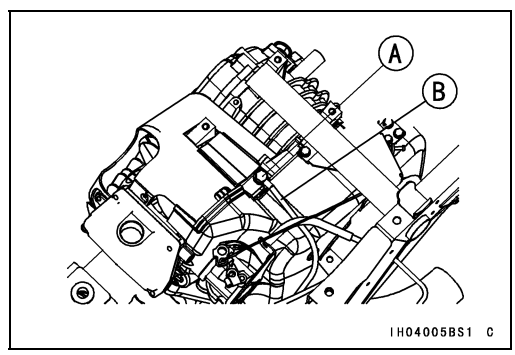

● Remove:
Engine [A]

Engine Removal/Installation

Engine Installation

★If the transmission case has not been removed, start from the step 2.

Step 1

- Mount the transmission case [A] with the rear axle brackets [B] on the swingarm.
- Tighten the rear axle bracket bolts [C] with the specified torque.

Torque - Rear Axle Bracket Bolts: 34 N·m (3.5 kgf·m, 25 ft·lb)

Step 2

- Replace the engine mounting nuts with new ones.
- Mount the engine [D] on the swingarm.
- Install the engine mount bolts and tighten the nuts [E] lightly by hand.
- Install the engine ground lead [F] (KAF400-A1 ~ AA/B1 ~ BA/C1 ~ CA Models)
- Install the engine ground lead [G] (KAF400AB ~/BB ~ Models)
- Install the connecting plate [H] to the engine and transmission case so that the plate fits to the face shown by spigot joint areas [I].
- Apply a non-permanent locking agent:
  Connecting Plate Bolts (M10) [J]
  Connecting Plate Bolts (M8) [K]
- Install the washers and tighten the connecting plate bolts (M10 and M8) lightly by hand.
- Install the assembly jig [L] and tighten the bolts.

Special Tool - Assembly Jig: 57001-1631

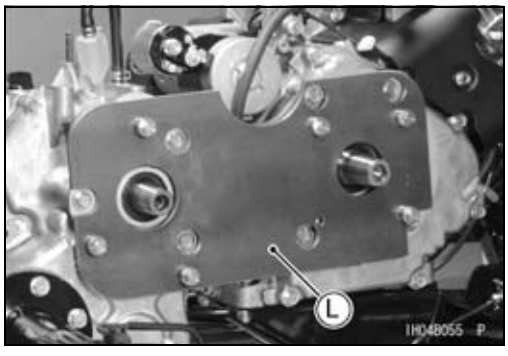

- Tighten the bolts in the following order.

Torque - Connecting Plate Bolts (M10): 55 N·m (5.6 kgf·m, 41 ft·lb)
Connecting Plate Bolts (M8): 28 N·m (2.9 kgf·m, 21 ft·lb)
Engine Mounting Bolts and Nuts: 40 N·m (4.1 kgf·m, 30 ft·lb)

- Remove the assembly jig.

★When the installing of the assembly jig is not complete, retry from beginning.

○The above is one of methods. If it is a method of adjusting alignment using the assembly jig (special tool), it is allowable the another method.

Engine Removal/Installation

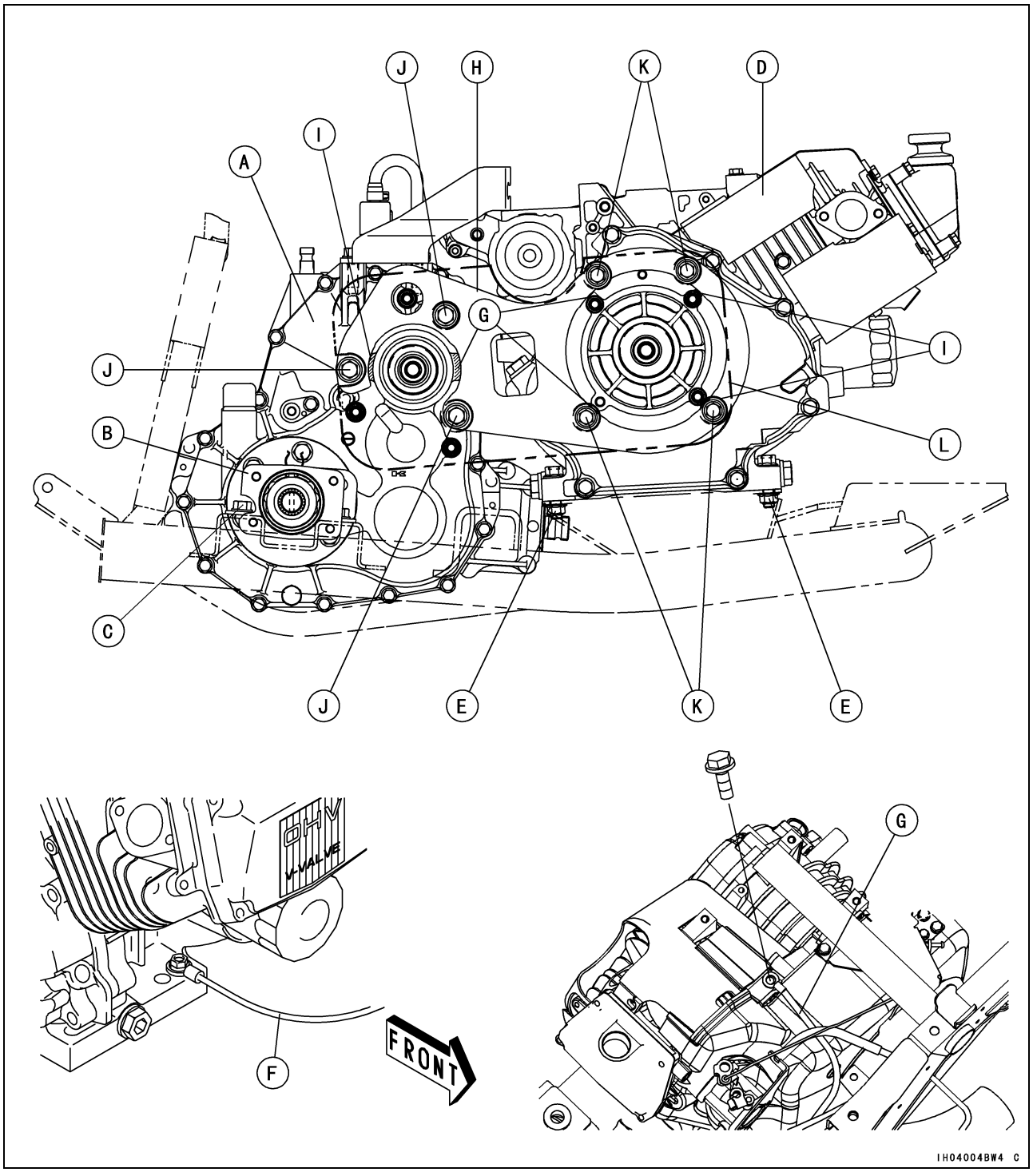

Engine Bottom End

Table of Contents

Exploded View 8-2
Specifications 8-4
Special Tools 8-6
Crankcase Cover 8-7
- Crankcase Cover Removal 8-7
- Crankcase Cover Assembly 8-7
- Crankcase Cover Installation 8-7

Camshaft and Tappets 8-8
- Camshaft, Tappet Removal 8-8
- Camshaft, Tappet Installation 8-8
- Camshaft Disassembly 8-9
- Camshaft Assembly 8-9
- Camshaft Inspection 8-9
- Camshaft Bearing/Journal Wear Inspection 8-10

Cylinders and Pistons 8-11
- Piston Removal 8-11
- Piston Installation 8-12
- Piston Cleaning 8-13
- Piston Ring and Ring Groove Wear Inspection 8-14
- Piston Ring End Gap Inspection 8-15
- Piston Pin, Piston Pin Hole, and Connecting Rod Wear Inspection 8-15
- Piston Diameter Inspection 8-16
- Cylinder Inside Diameter Inspection 8-16

Crankshaft and Connecting Rods 8-17
- Connecting Rod Removal 8-17
- Connecting Rod Installation 8-17
- Crankshaft Removal 8-17
- Crankshaft Installation 8-17
- Cleaning/Inspection 8-17
- Connecting Rod Bend/Twist Inspection 8-18
- Connecting Rod Big End/Crankpin Width Wear Inspection 8-18
- Connecting Rod Big End Bearing/Crankpin Wear Inspection 8-19
- Crankshaft Runout Inspection 8-19
- Crankshaft Main Bearing/Journal Wear Inspection 8-19

Balancer Shaft 8-21
- Balancer Shaft Removal 8-21
- Balancer Shaft Installation 8-21
- Balancer Shaft Bearing/Journal Wear Inspection 8-21

Breather 8-22
- Breather Valve Removal 8-23
- Breather Valve Installation 8-23
- Breather Valve Inspection 8-23

Exploded View

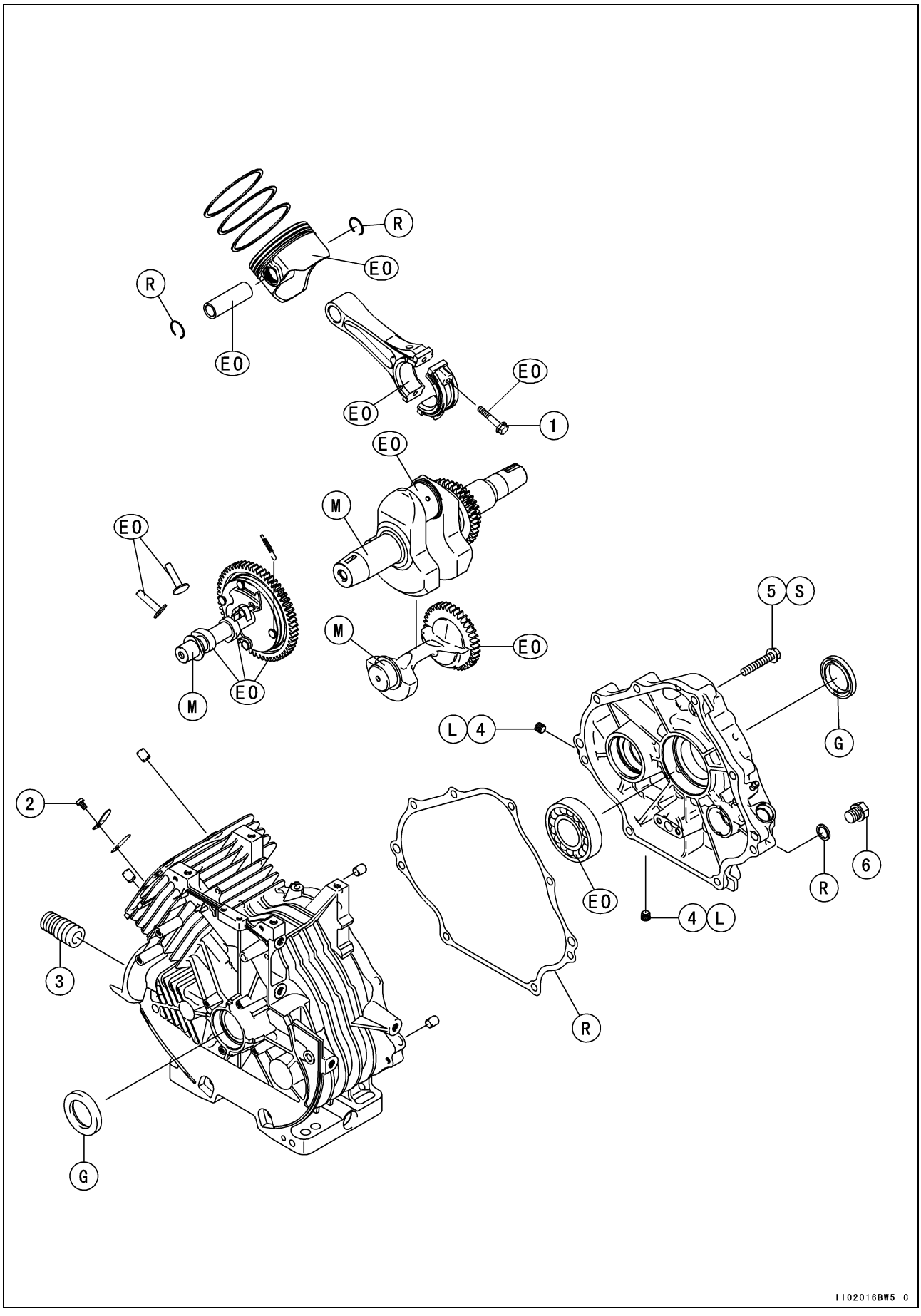

Exploded View

No.	Fastener	Torque			Remarks
		N·m	kgf·m	ft·lb	
1	Connecting Rod Big End Cap Bolts	5.9	0.60	52 in·lb	EO
2	Breather Valve Screw	3.4	0.35	30 in·lb	
3	Oil Filter Joint	6.9	0.70	61 in·lb	
4	Oil Line Plugs	3.9	0.40	34 in·lb	L
5	Crankcase Cover Bolts (thread length 45 mm, 1.7 in.)	22	2.2	16	S
	Crankcase Cover Bolts (thread length 22 mm, 0.87 in.)	33	3.4	24	S
6	Engine Oil Drain Plugs	20	2.0	14	

EO: Apply engine oil.
G: Apply grease.
L: Apply a non-permanent locking agent.
M: Apply molybdenum disulfide grease.
R: Replacement Parts
S: Follow the specific tightening sequence.

Specifications

Item	Standard	Service Limit
Camshaft and Tappets		
Cam Lobe Height:		
Inlet	29.955 ~ 30.045 mm (1.179 ~ 1.183 in.)	29.86 mm (1.176 in.)
Exhaust	29.955 ~ 30.045 mm (1.179 ~ 1.183 in.)	29.86 mm (1.176 in.)
Camshaft Journal Diameter:		
Crankcase Side	19.967 ~ 19.980 mm (0.7861 ~ 0.7866 in.)	19.94 mm (0.785 in.)
Crankcase Cover Side	49.959 ~ 49.975 mm (1.9669 ~ 1.9675 in.)	49.93 mm (1.966 in.)
Camshaft Bearing Inside Diameter:		
Crankcase Side	20.000 ~ 20.013 mm (0.7874 ~ 0.7879 in.)	20.07 mm (0.790 in.)
Crankcase Cover Side	50.000 ~ 50.025 mm (1.9685 ~ 1.9695 in.)	50.09 mm (1.972 in.)
Cylinders and Pistons		
Piston Ring/Groove Clearance:		
Top, Second	0.04 ~ 0.08 mm (0.0016 ~ 0.0031 in.)	0.18 mm (0.0071 in.)
Piston Ring Thickness:		
Top, Second	1.47 ~ 1.49 mm (0.0579 ~ 0.0587 in.)	1.40 mm (0.0551 in.)
Piston Ring End Gap:		
Top	0.15 ~ 0.40 mm (0.0059 ~ 0.0157 in.)	0.7 mm (0.028 in.)
Second	0.23 ~ 0.48 mm (0.0091 ~ 0.0189 in.)	0.8 mm (0.031 in.)
Oil	0.25 ~ 0.75 mm (0.0098 ~ 0.0295 in.)	1.0 mm (0.039 in.)
Piston Pin Outside Diameter	18.995 ~ 19.000 mm (0.7478 ~ 0.7480 in.)	18.96 mm (0.746 in.)
Piston Pin Hole Inside Diameter	19.004 ~ 19.015 mm (0.7482 ~ 0.7486 in.)	19.08 mm (0.751 in.)
Connecting Rod Small End Inside Diameter	19.010 ~ 19.021 mm (0.7484 ~ 0.7489 in.)	19.06 mm (0.750 in.)
Piston Diameter	81.935 ~ 81.955 mm (3.2258 ~ 3.2266 in.)	81.79 mm (3.220 in.)
Cylinder Inside Diameter	81.97 ~ 81.99 mm (3.2272 ~ 3.2279 in.)	82.10 mm (3.232 in.)
Cylinder Bore Out-Round	– – –	0.05 mm (0.0020 in.)
Piston/Cylinder Clearance	0.015 ~ 0.055 mm (0.0006 ~ 0.0022 in.)	– – –
Crankshaft and Connecting Rods		
Connecting Rod Bend	– – –	0.2/100 mm (0.008/3.937 in.)
Connecting Rod Twist	– – –	0.2/100 mm (0.008/3.937 in.)

Specifications

Item	Standard	Service Limit
Connecting Rod Big End Width	27.4 ~ 27.7 mm (1.079 ~ 1.091 in.)	27.0 mm (1.063 in.)
Crankpin Width	28.0 ~ 28.2 mm (1.102 ~ 1.110 in.)	28.4 mm (1.112 in.)
Connecting Rod Big End Inside Diameter	43.004 ~ 43.015 mm (1.6931 ~ 1.6935 in.)	43.04 mm (1.694 in.)
Crankpin Outside Diameter	42.957 ~ 42.970 mm (1.6912 ~ 1.6917 in.)	42.94 mm (1.691 in.)
Crankshaft Runout	TIR 0.02 mm (0.0008 in.) or less	TIR 0.05 mm (0.002 in.)
Crankshaft Main Journal Diameter		
Crankcase Side	34.955 ~ 34.980 mm (1.3762 ~ 1.3772 in.)	34.93 mm (1.375 in.)
Crankshaft Main Bearing Inside Diameter		
Crankcase Side	35.002 ~ 35.015 mm (1.3780 ~ 1.3785 in.)	35.05 mm (1.380 in.)
Balancer Shaft		
Balancer Shaft Journal Diameter	31.959 ~ 31.975 mm (1.2582 ~ 1.2589 in.)	31.935 mm (1.257 in.)
Balancer Shaft Bearing Inside Diameter:		
Crankcase Side	32.000 ~ 32.016 mm (1.2598 ~ 1.2605 in.)	32.06 mm (1.262 in.)
Crankcase Cover Side	32.000 ~ 32.016 mm (1.2598 ~ 1.2605 in.)	32.06 mm (1.262 in.)

Special Tools

Piston Ring Compressor Grip:
57001-1095

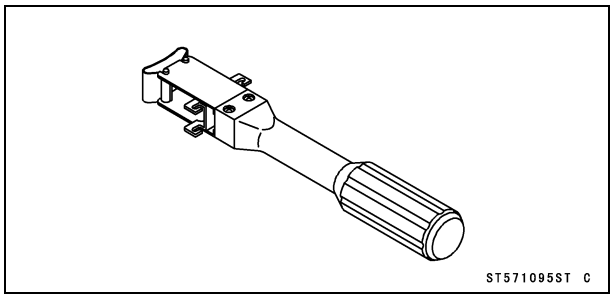

Piston Ring Compressor Belt, ϕ80 ~ ϕ91:
57001-1320

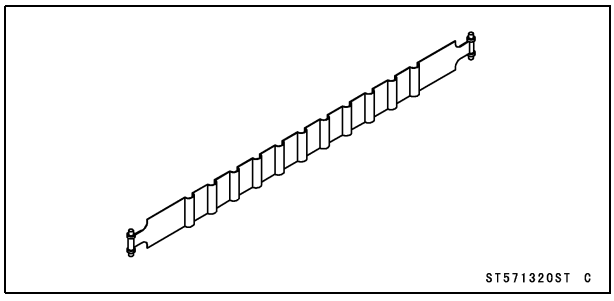

Bearing Driver Set:
57001-1129

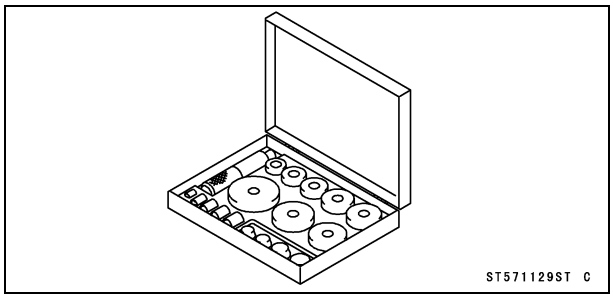

Crankcase Cover

Crankcase Cover Removal

- Remove:
  Engine (see Engine Removal/Installation chapter)
  Engine Oil (drain, see Engine Oil Change in the Periodic Maintenance chapter)
  Crankcase Cover Bolts [A]
  Crankcase Cover [B]

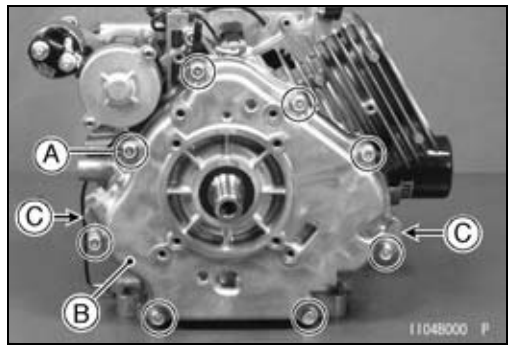

NOTE

○*If the crankcase cover sticks, tap lightly with a mallet near the dowel pins [C].*

Crankcase Cover Assembly

- Install the ball bearing [A] until it is bottomed.

  Special Tool - Bearing Driver Set: 57001-1129

- Apply grease to 60% volume between seal lips.
- Install the oil seal [B] at specified position as shown.
  [C] Crankcase Cover
  [D] 4.0 ~ 4.5 mm (0.16 ~ 0.18 in.)

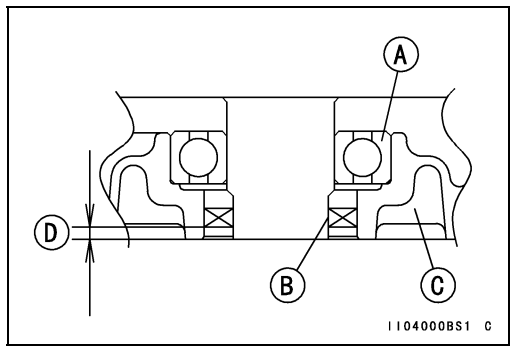

Crankcase Cover Installation

- Check to see that the dowel pins [A] are in place on the crankcase.

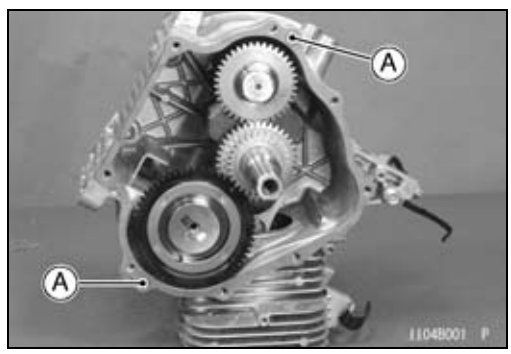

- Install the crankcase cover and tighten the crankcase cover bolts following the tightening sequence as shown.

  Torque - Crankcase Cover Bolts (thread length 45 mm, 1.7 in.): 22 N·m (2.2 kgf·m, 16 ft·lb)
  Crankcase Cover Bolts (thread length 22 mm, 0.87 in.): 33 N·m (3.4 kgf·m, 24 ft·lb)

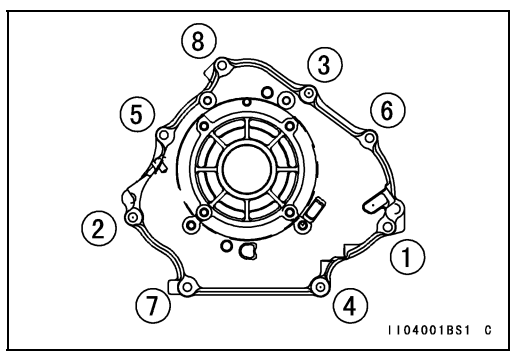

Camshaft and Tappets

Camshaft, Tappet Removal

- Drain the oil (see Oil Change in the Periodic Maintenance chapter).
- Remove:
  Crankcase Cover (see Crankcase Cover Removal)
  Cylinder Head Cover [A]

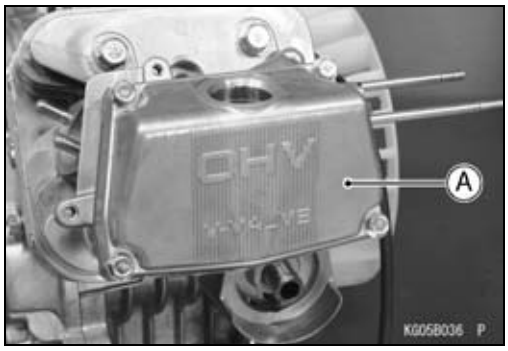

- Position the piston TDC at the end of the compression stroke.
- Remove the lock screws [A] and the valve clearance adjusting nuts [B] which install the rocker arm [C], and pull the rocker arm off the push rods [D].
- Remove the push rods and mark them so they can be installed in their original positions during assembly.

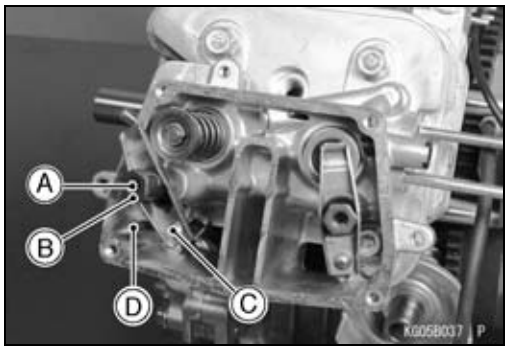

- Pull the camshaft [A] out of the crankcase.

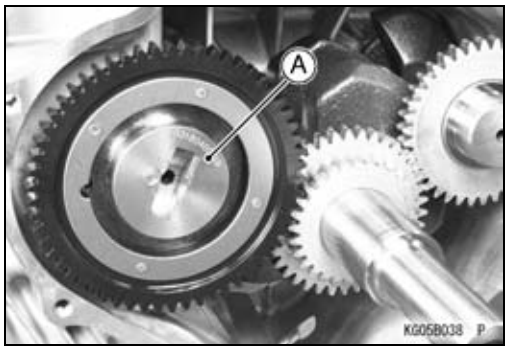

- Remove the tappets [A] and mark them so they can be installed in their original positions during assembly.

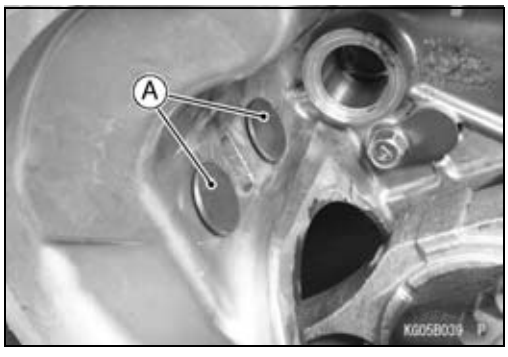

Camshaft, Tappet Installation

- Apply engine oil to the following.
  Tappet Journal
  Camshaft Journal
  Cam Lobe Surface
  Camshaft Gear
- Install the tappets in their original positions.
- Align the punch marks [A] on the crankshaft gear and on the camshaft gear.

Camshaft and Tappets

- Install the crankcase cover (see Crankcase Cover Installation).
- Install the push rods (see Push Rod Installation in the Engine Top End chapter).
- Mount the rocker arms on the push rods, and install the valve clearance adjusting nuts and the lock screws.

Torque - Valve Adjusting Nut Lock Screws: 6.9 N·m (0.70 kgf·m, 61 in·lb)

- Adjust the valve clearance (see Valve Clearance Adjustment in the Periodic Maintenance chapter).
- Install the cylinder head cover.

Camshaft Disassembly

- Remove:
  Spring [A]
- Do not remove the ACR (Automatic Compression Release) weight [B].

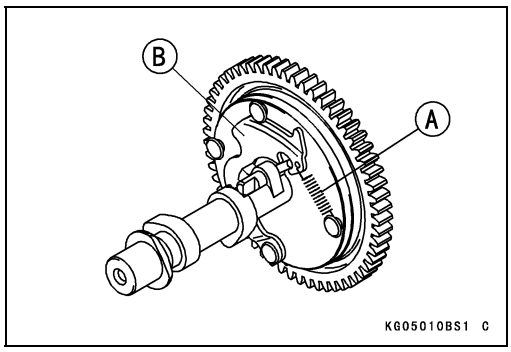

Camshaft Assembly

- After assembling the camshaft, check the following item.

○While shaking the camshaft, ACR weight [A] swings smoothly.

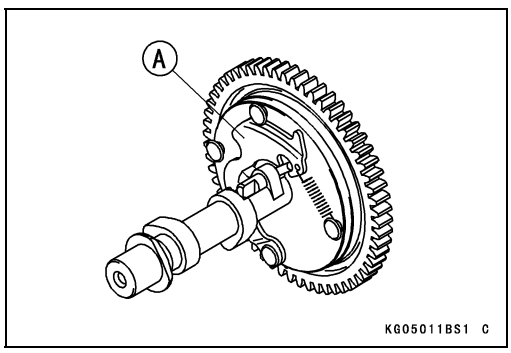

Camshaft Inspection

- Check the camshaft gear [A] for pitting, fatigue cracks, burrs or an evidence of improper tooth contact.

★Replace the shaft if necessary.

- Check the top of the cam lobes [B] for wear, burrs or uneven contact.

★Replace the shaft if necessary.

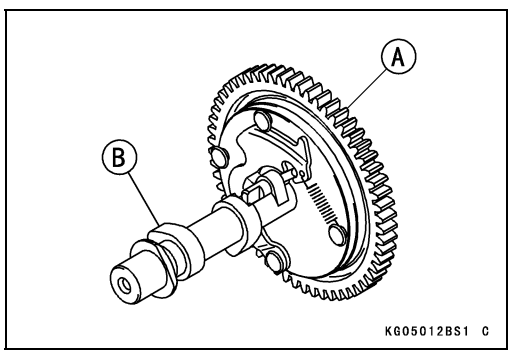

- Inspect the camshaft to make sure that its Automatic Compression Release (ACR) function operates smoothly and does not have any damage or abnormal wear.

★If ACR parts are worn, replace the camshaft.

★When the weight [A] is closed, if the top of the shaft [B] is lower than the base [C], replace the camshaft with a new one.

★When the weight is pulled entirely outward with your finger, if the top of the shaft is higher than the cam base, replace the camshaft with a new one.

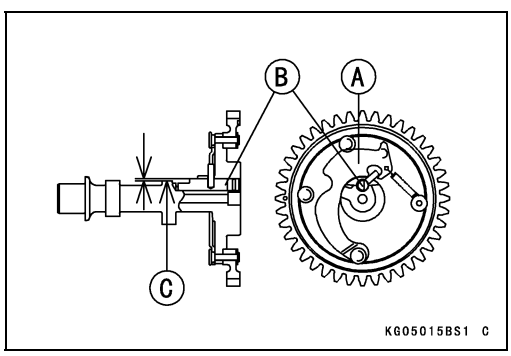

Camshaft and Tappets

Camshaft Bearing/Journal Wear Inspection

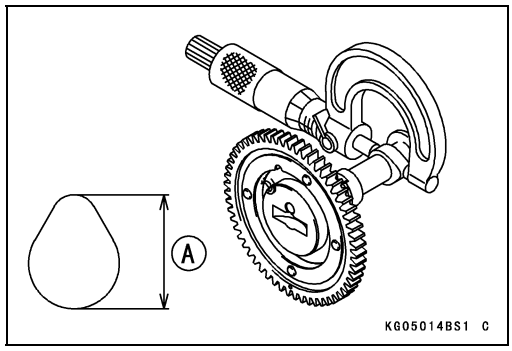

- Measure the height of each cam lobe [A].

★If the cam height is less than the service limit for either lobe, replace the camshaft.

Cam Lobe Height

Standard:

Inlet	**29.955 ~ 30.045 mm (1.179 ~ 1.183 in.)**
Exhaust	**29.955 ~ 30.045 mm (1.179 ~ 1.183 in.)**

Service Limit:

Inlet	**29.86 mm (1.176 in.)**
Exhaust	**29.86 mm (1.176 in.)**

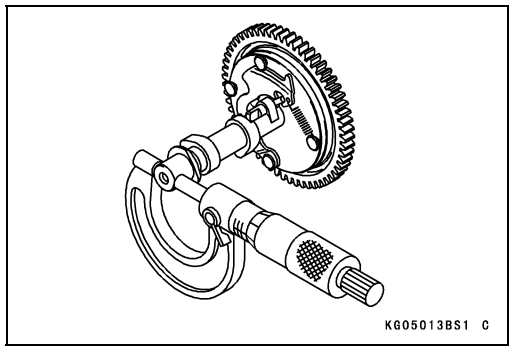

- Measure both camshaft journals at several points around the journal circumference.

★If the journal diameter is less than the service limit, replace the camshaft.

Crankcase Side Camshaft Journal Diameter

Standard	**19.967 ~ 19.980 mm (0.7861 ~ 0.7866 in.)**
Service Limit:	**19.94 mm (0.785 in.)**

Crankcase Cover Side Camshaft Journal Diameter

Standard:	**49.959 ~ 49.975 mm (1.9669 ~ 1.9675 in.)**
Service Limit:	**49.93 mm (1.966 in.)**

- Measure the inside diameter [A] of the camshaft bearing on the crankcase at several points.

★Replace the crankcase if the inside diameter is more than the service limit.

Camshaft Bearing Inside Diameter (Crankcase)

Standard:	**20.000 ~ 20.013 mm (0.7874 ~ 0.7879 in.)**
Service Limit:	**20.07 mm (0.790 in.)**

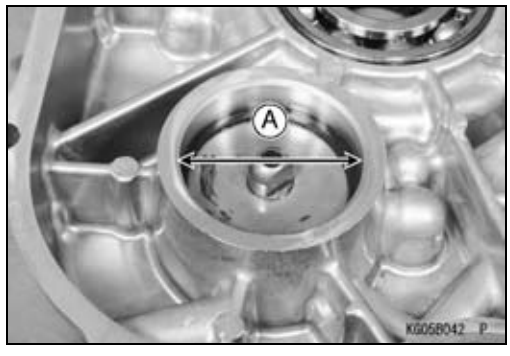

- Measure the inside diameter [A] of the camshaft bearing on the crankcase cover at several points.

★Replace the crankcase cover if the inside diameter is more than the service limit.

Camshaft Bearing Inside Diameter (Crankcase Cover)

Standard:	**50.000 ~ 50.025 mm (1.9685 ~ 1.9695 in.)**
Service Limit:	**50.09 mm (1.972 in.)**

Cylinders and Pistons

Piston Removal

- Remove:
  Crankcase Cover (see Crankcase Cover Removal)
  Camshaft (see Camshaft, Tappet Removal)
  Balancer Shaft (see Balancer Shaft Removal)
- Turn the crankshaft to expose the connecting rod cap bolts [A].
- Remove the bolts and take off the connecting rod cap [B].

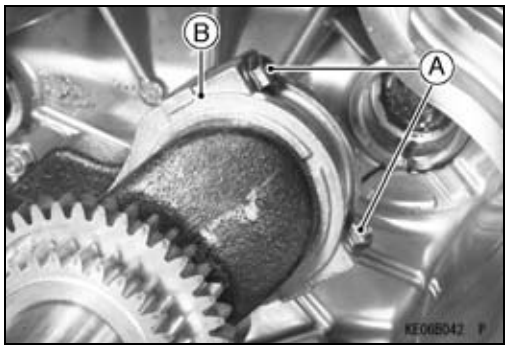

NOTE

○*Note the position of the connecting rod caps for reinstalling the caps.*

- Push the connecting rod end into the cylinder, and pull the piston and connecting rod out of the cylinder.
- Remove one of the piston pin snap rings [A] with needle nose pliers.

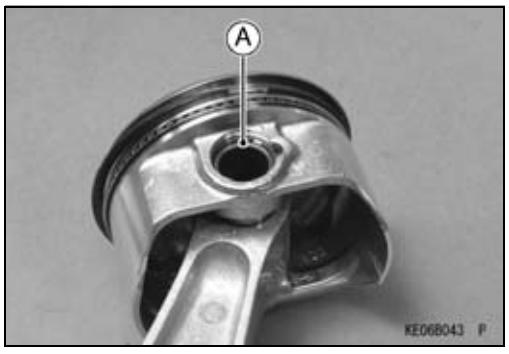

- Remove the piston by pushing the piston pin [A] out the side from which the snap ring was removed.

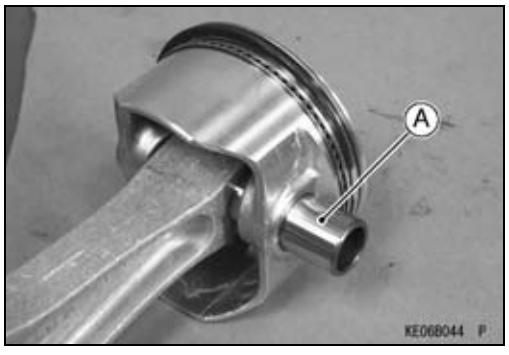

- Carefully spread the ring opening with your thumbs and then push up on the opposite side of the ring [A] to remove it.
- Remove the 3-piece oil ring with your thumbs in the same manner.

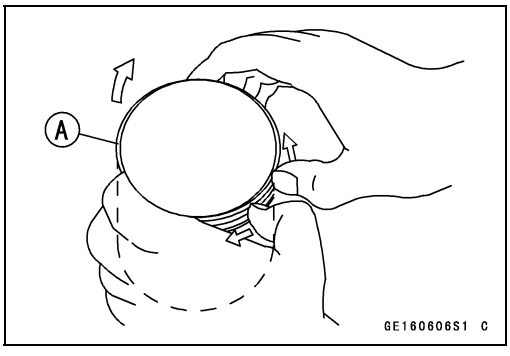

Piston Installation

- Install the expander [A] in the piston oil ring groove so that the expander ends [B] touch together, never overlap.
- Install the upper and lower steel rails. There is no UP or Down to the rails. They can be installed either way.

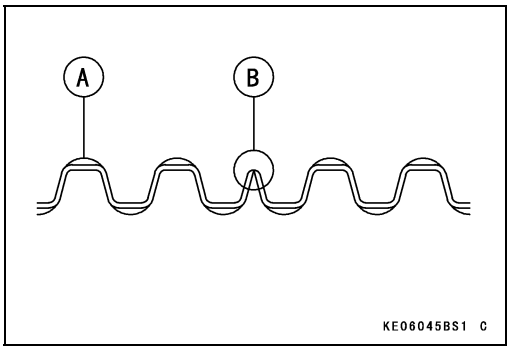

- Do not mix up the top and second rings.
- Install the second ring so that the notched edge [A] faces down.
- Install the top ring.
- The rings should turn freely in the grooves.
  Piston Head [B]
  Top Ring [C]
  Second Ring [D]

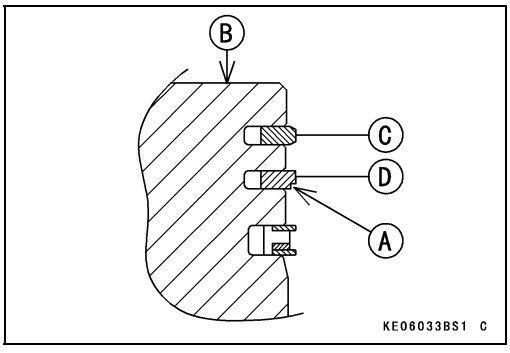

- Align the piston and rings with the piston ring end gap as shown.
  Arrow Match Marks [A]
  Top ring End Gap, Upper Steel Rail End Gap [B]
  About 45° [C]
  Second Ring End Gap, Lower Steel Rail End Gap [D]

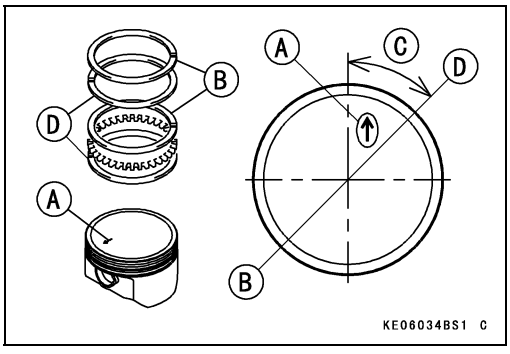

- Apply engine oil to the piston pins.
- Assemble the piston onto the connecting rod so that the arrow mark [A] on the top of the piston can be aligned with “MADE IN USA” [B] on the connecting rod.

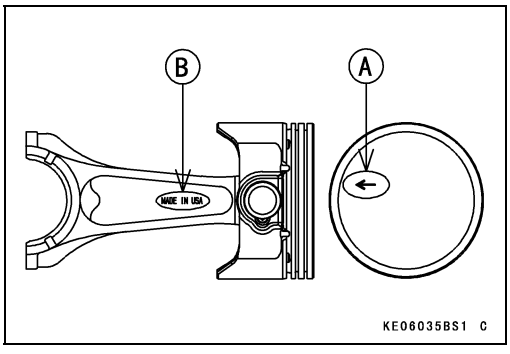

- Fit a new piston pin snap ring into the side of the piston so that the ring opening [A] does not coincide with the notch [B] in the edge of the piston pin hole.

○When installing a piston pin snap ring, compress it only enough to install it and no more.

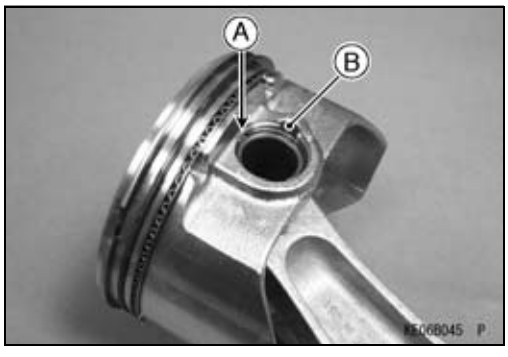

NOTICE
Do not reuse the snap rings, as removal weakens and deforms them. They could fall out and score the cylinder wall.

Cylinders and Pistons

- Apply engine oil to the piston skirt and the cylinder bore.
- Using the piston ring compressor grip [A] and the belt [B], lightly tap the top of the piston with a plastic mallet [C] to insert the piston and connecting rod into the cylinder.

  Special Tools - Piston Ring Compressor Grip: 57001-1095
  Piston Ring Compressor Belt, ϕ80 ~ ϕ91: 57001-1320

- Facing the arrow mark [D] on the top of the piston toward the alternator rotor side [E].

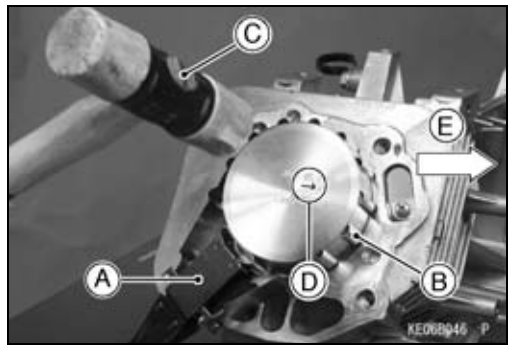

NOTICE
The connecting rod and the connecting rod big end cap are machined at the factory in the assembled state, so they must be replaced together as a set.

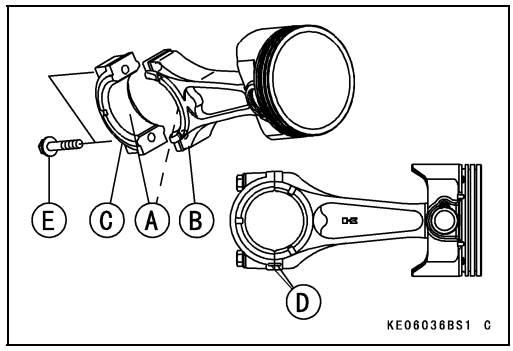

- Apply engine oil to the inner surface [A] of the connecting rod big end [B] and caps [C].
- Install the connecting rod big end caps in their original position on the connecting rod big ends by matching the marks [D].
- Apply a small amount of engine oil to the thread and seating surface of the cap bolts [E].
- Tighten the cap bolts.

  Torque - Connecting Rod Big End Cap Bolts: 5.9 N·m (0.60 kgf·m, 52 in·lb)

- Install:
  Camshaft (see Camshaft, Tappet Installation)
  Crankcase Cover (see Crankcase Cover Installation)

Piston Cleaning

- Remove the piston and piston rings (see Piston Removal).

NOTICE
Never clean the piston head with the engine assembled. Carbon particles will fall between the piston and cylinder, and damage the crankshaft bearings.

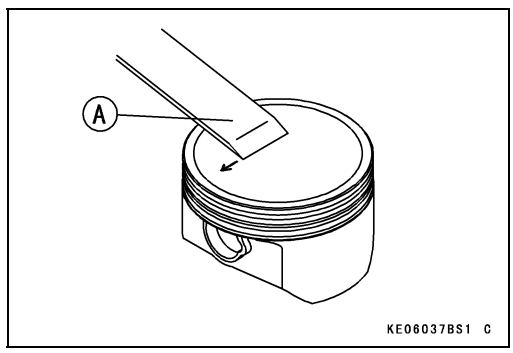

- Scrape the carbon off the piston head with a scraper [A].
- Use the scraping tools carefully. Do not gouge the piston head. To avoid gouging, use scrapers that are made of a material that will not cause damage.

- Clean the piston ring grooves [A] with a broken piston ring or other suitable tools.

NOTICE
Be careful not to widen the ring grooves. Damaged ring grooves will require piston replacement.

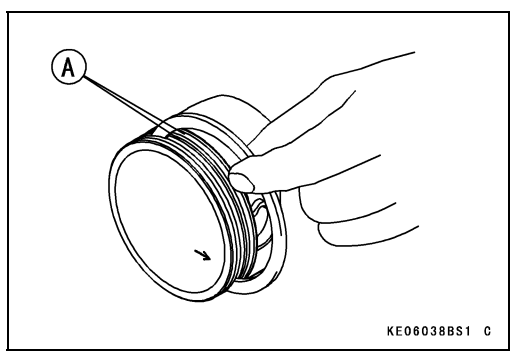

Cylinders and Pistons

Piston Ring and Ring Groove Wear Inspection

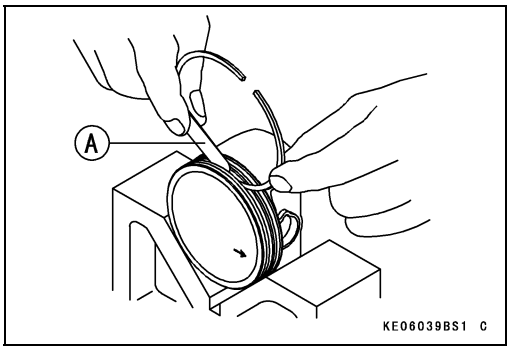

- Clean the piston (see Piston Cleaning).
- Visually inspect the piston rings and ring grooves.

★If the piston rings are worn unevenly or damaged, replace them.

★If the ring grooves are worn unevenly or damaged, replace both the piston and piston rings.

- Measure the clearance between the top and second rings and their grooves using a thickness gauge [A].

★If the piston ring/groove clearance is greater than the specified value, replace the piston.

Piston Ring/Groove Clearance

Standard:

Top, Second 0.04 ~ 0.08 mm (0.0016 ~ 0.0031 in.)

Service Limit:

Top, Second 0.18 mm (0.0071 in.)

NOTE

○*The oil ring is a three piece assembled ring. It is difficult to measure the ring groove clearance and thickness, visually inspect only.*

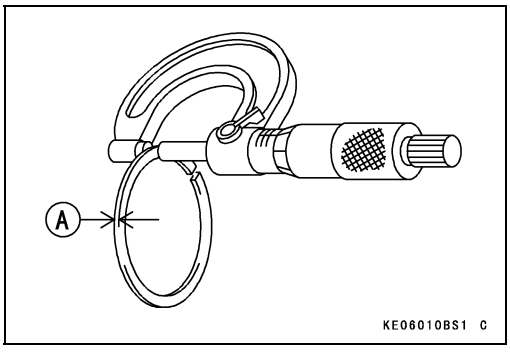

- Measure the piston ring thickness [A].

○Use a micrometer to measure at several points around the rings.

★If any of the measurement are less than the service limit, replace the entire set of rings.

Piston Ring Thickness

Standard:

Top, Second 1.47 ~ 1.49 mm (0.0579 ~ 0.0587 in.)

Service Limit

Top, Second 1.40 mm (0.0551 in.)

NOTE

○*When using new rings in a used piston, check for uneven groove wear. The rings should fit perfectly parallel to the groove sides. If not, replace the piston.*

Cylinders and Pistons

Piston Ring End Gap Inspection

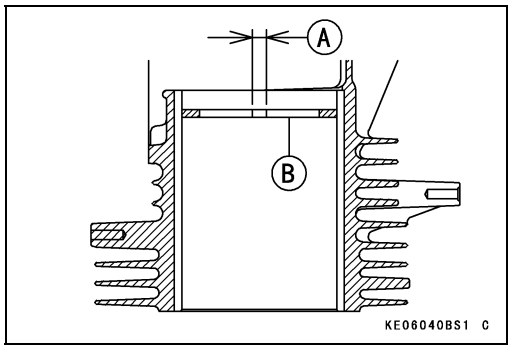

- Remove the piston rings.
- Push each ring (one at a time) in the cylinder bore to a point close to the bottom of the cylinder bore.

○Use the piston to push it in to be sure it is square.

- Measure the gap [A] between the ends of the ring [B] with a thickness gauge.

★If the end gap of any ring is greater than the service limit, replace the entire set of rings.

Piston Ring End Gap

Standard:

Top	**0.15 ~ 0.40 mm (0.0059 ~ 0.0157 in.)**
Second	**0.23 ~ 0.48 mm (0.0091 ~ 0.0189 in.)**
Oil	**0.25 ~ 0.75 mm (0.0098 ~ 0.0295 in.)**

Service Limit:

Top	**0.7 mm (0.028 in.)**
Second	**0.8 mm (0.031 in.)**
Oil	**1.0 mm (0.039 in.)**

Piston Pin, Piston Pin Hole, and Connecting Rod Wear Inspection

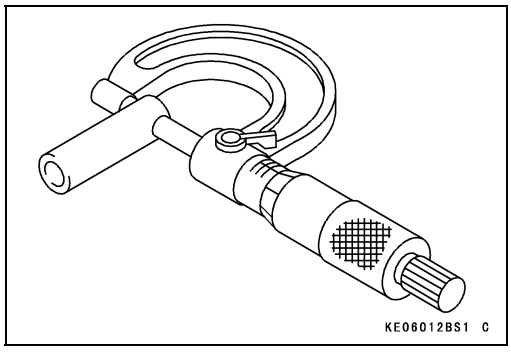

- Remove the piston pin.
- Measure the outside diameter of the piston pin with a micrometer at several points.

★If the outside diameter is less than service limit, replace the piston pin.

Piston Pin Outside Diameter

Standard:	**18.995 ~ 19.000 mm (0.7478 ~ 0.7480 in.)**
Service Limit:	**18.96 mm (0.746 in.)**

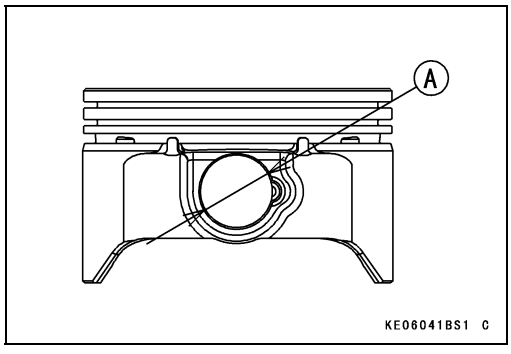

- Measure the inside diameter [A] of the piston pin hole at several points on both side. Use a dial bore gauge.

★If the inside diameter is more than the service limit, replace the piston.

Piston Pin Hole Inside Diameter

Standard:	**19.004 ~ 19.015 mm (0.7482 ~ 0.7486 in.)**
Service Limit:	**19.08 mm (0.751 in.)**

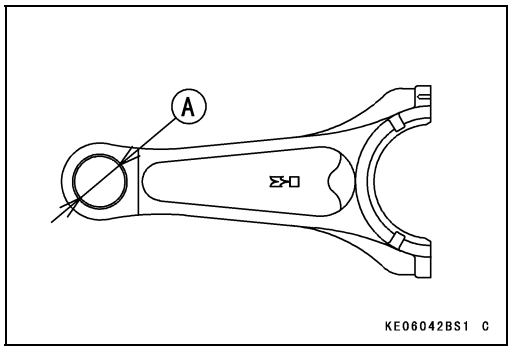

- Measure the inside diameter [A] of the small end of the connecting rod at several points. Use a dial bore gauge.

★If the inside diameter is more than the service limit, replace the connecting rod.

Connecting Rod Small End Inside Diameter

Standard:	**19.010 ~ 19.021 mm (0.7484 ~ 0.7489 in.)**
Service Limit:	**19.06 mm (0.750 in.)**

Cylinders and Pistons

Piston Diameter Inspection

- Measure the outside diameter [A] of the piston 18 mm (0.71 in.) up [B] from the bottom of the piston at a right angle to the direction of the piston pin hole.

★If the measurement is less than the service limit, replace the piston.

Piston Diameter

Standard: 81.935 ~ 81.955 mm (3.2258 ~ 3.2266 in.)

Service Limit: 81.79 mm (3.220 in.)

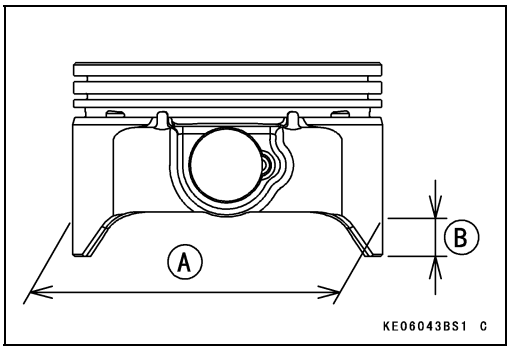

Cylinder Inside Diameter Inspection

- Clean and measure the cylinder inside diameter.

○Use a dial bore gauge to measure front-to-back and side -to-side at the points as shown in the figure.

★If any of the cylinder bore measurements is greater than the service limit, replace the crankcase.

10 mm (0.39 in.) [A]
35 mm (1.38 in.) [B]

Cylinder Inside Diameter

Standard: 81.97 ~ 81.99 mm (3.2272 ~ 3.2279 in.)

Service Limit: 82.10 mm (3.232 in.)

Cylinder Bore Out-Round

Service Limit: 0.05 mm (0.0020 in.)

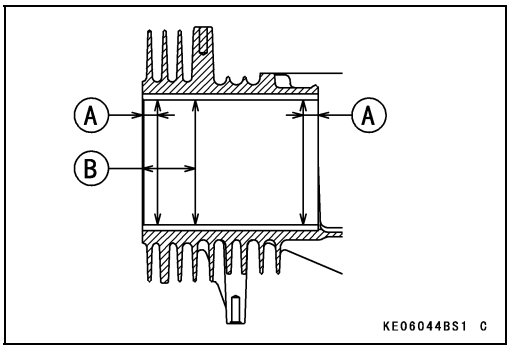

Crankshaft and Connecting Rods

Connecting Rod Removal

- Refer to the Piston Removal for the connecting rod removal.

Connecting Rod Installation

- Refer to the Piston Installation for the connecting rod installation.

Crankshaft Removal

- Drain the oil (see Oil Change in the Periodic Maintenance chapter).
- Remove:
  Alternator Rotor (see Alternator Rotor and Stator Removal in the Electrical System chapter)
  Camshaft (see Camshaft, Tappet Removal)
  Balancer Shaft (see Balancer Shaft Removal)
  Connecting Rod Cap (see Piston Removal)
- Pull the crankshaft [A] out of the crankcase. Tap gently with a wooden or plastic mallet if necessary to loosen the crankshaft.

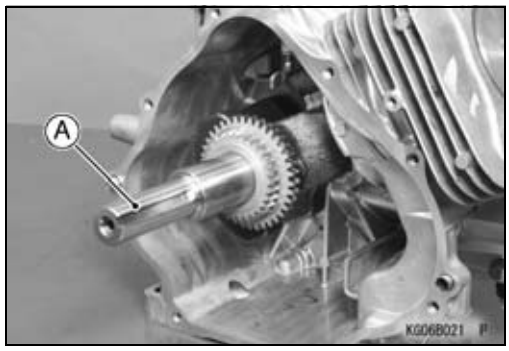

Crankshaft Installation

- Clean up the crankshaft and crankcase thoroughly, especially at the bearing contact surfaces.
- Pack some amount of grease to 60% volume between the lips of the oil seal on the crankcase. Press in the new oil seal 0 ~ 1 mm (0 ~ 0.04 in.) below the crankcase surface.
- Apply molybdenum disulfide grease to the alternator side journal.
- Apply engine oil to the crank pin and bearing.
- Insert the crankshaft into the crankcase.

Cleaning/Inspection

- After removing, clean the crankshaft and connecting rods with a high flash-point washing and dry them with compressed air.
- Inspect the teeth of the crankshaft gear for pitting, fatigue cracks, burrs and evidence of improper tooth contact.

★Replace the gear if necessary.

- Inspect the crankshaft and connecting rods especially at the bearing surfaces for wear, scratches, evidence of improper contact or other damages.

★Replace them if necessary.

Crankshaft and Connecting Rods

Connecting Rod Bend/Twist Inspection

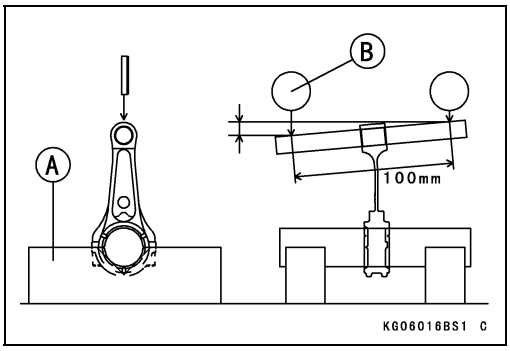

- Measure connecting rod bend.

○Select an arbor of the same diameter as the connecting rod big end, and insert the arbor through the connecting rod big end.

○Select an arbor of the same diameter as the piston pin and at least 100 mm (3.937 in.) long, and insert the arbor through the connecting rod small end.

○On a surface plate, set the big-end arbor on V blocks [A].

○With the connecting rod held vertically, use a height gauge [B] to measure the difference in the height of the small end arbor above the surface plate over a 100 mm (3.937 in.) length to determine the amount of connecting rod bend.

★If connecting rod bend exceeds the service limit, the connecting rod must be replaced.

Connecting Rod Bend
Service Limit: 0.2/100 mm (0.008/3.937 in.)

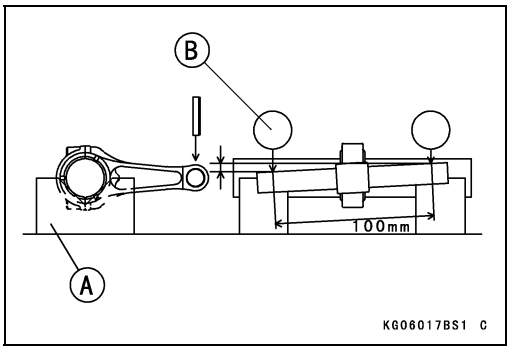

- Measure connecting rod twist.

○With the big-end arbor still on the V blocks [A], hold the connecting rod horizontally and measure the amount that the small end arbor varies from being parallel with the surface plate over a 100 mm (3.937 in.) length of the arbor to determine the amount of connecting rod twist by using a height gauge [B].

★If connecting rod twist exceeds the service limit, the connecting rod must be replaced.

Connecting Rod Twist
Service Limit: 0.2/100 mm (0.008/3.937 in.)

Connecting Rod Big End/Crankpin Width Wear Inspection

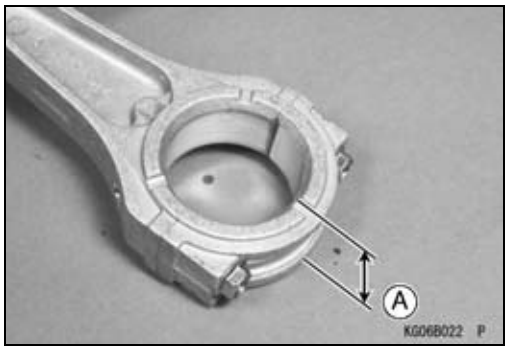

- Measure the connecting rod big end width [A] with a micrometer or dial caliper.

★If the measurement is less than the service limit, replace the connecting rod.

Connecting Rod Big End Width
Standard: 27.4 ~ 27.7 mm (1.079 ~ 1.091 in.)
Service Limit: 27.0 mm (1.063 in.)

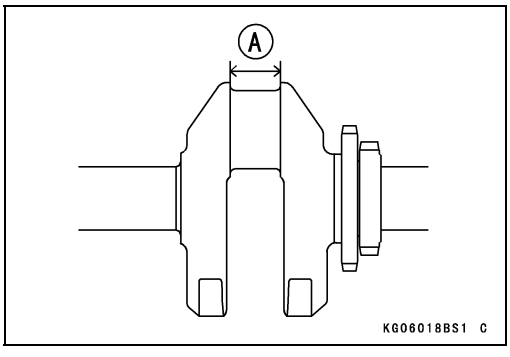

- Measure the crankpin width [A] with a dial caliper.

★If the crankpin width is more than the service limit, replace the crankshaft.

Crankpin Width
Standard: 28.0 ~ 28.2 mm (1.102 ~ 1.110 in.)
Service Limit: 28.4 mm (1.112 in.)

Crankshaft and Connecting Rods

Connecting Rod Big End Bearing/Crankpin Wear Inspection

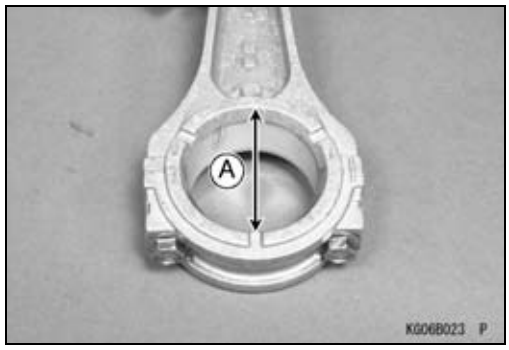

- Apply a thin film of oil on the thread of the cap bolts.
- Install the cap bolts and tighten the bolts to the specified torque (see Piston Installation in the Engine Top End chapter).
- Measure the inside diameter [A] of big end at several points with a telescoping gauge or inside micrometer.

★If the inside diameter is more than the service limit, replace the connecting rod with a new one.

Connecting Rod Big End Inside Diameter

Standard:	**43.004 ~ 43.015 mm (1.6931 ~ 1.6935 in.)**
Service Limit:	**43.04 mm (1.694 in.)**

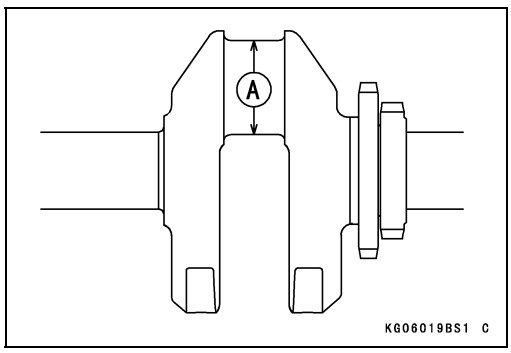

- Measure the crankpin outside diameter [A].

○Use a micrometer to measure several points around the crankpin circumference.

★If the crankpin diameter is less than the service limit, replace the crankshaft with a new one.

Crankpin Outside Diameter

Standard:	**42.957 ~ 42.970 mm (1.6912 ~ 1.6917 in.)**
Service Limit:	**42.94 mm (1.691 in.)**

Crankshaft Runout Inspection

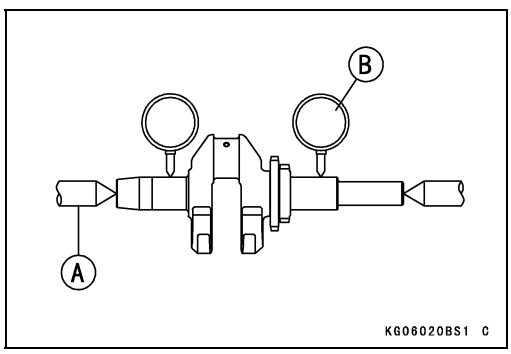

- Measure the crankshaft runout.

○Set the crankshaft in a flywheel alignment jig [A] or on V blocks gauge.

○Set a dial gauge [B] against both bearing journals.

○Turn the crankshaft slowly to measure the runout. The difference between the highest and lowest dial gauge readings (TIR) is the amount of runout.

★If the measurement exceeds the service limit, replace the crankshaft.

Crankshaft Runout

Standard:	**TIR 0.02 mm (0.0008 in.) or less**
Service Limit:	**TIR 0.05 mm (0.002 in.)**

Crankshaft Main Bearing/Journal Wear Inspection

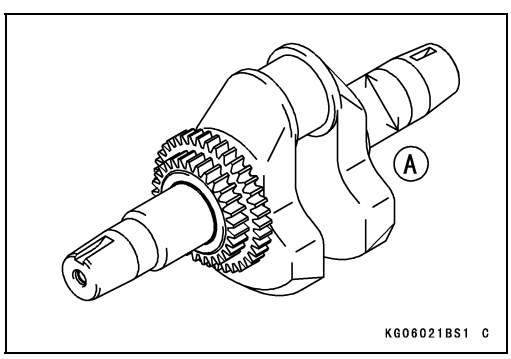

- Measure the diameter [A] of the crankshaft main journal.

★If the journal has worn past the service limit, replace the crankshaft with a new one.

Crankcase Side Crankshaft Main Journal Diameter

Standard:	**34.955 ~ 34.980 mm (1.3762 ~ 1.3772 in.)**
Service Limit:	**34.93 mm (1.375 in.)**

Crankshaft and Connecting Rods

- Measure the inside diameter [A] of the crankshaft main bearing (crankcase side).

★If the bearing has worn past the service limit, replace the crankcase with a new one.

Crankshaft Main Bearing Inside Diameter (Crankcase Side)

Standard	**35.002 ~ 35.015 mm (1.3780 ~ 1.3785 in.)**
Service Limit	**35.05 mm (1.380 in.)**

Balancer Shaft

Balancer Shaft Removal

- Remove:
  Crankcase Cover (see Crankcase Cover Removal)
  Balancer Shaft [A]

Balancer Shaft Installation

- Install the balancer shaft to the balancer shaft bearing on the crankcase.
- Install the crankcase cover (see Crankcase Cover Installation).
- Align the punch marks [A] on the crankshaft gear and on the balancer shaft gear.

Balancer Shaft Bearing/Journal Wear Inspection

- Measure both balancer shaft journals diameter [A] at several points around the journal circumference.

★If journal diameter is less than the service limit, replace the balancer shaft with a new one.

Balancer Shaft Journal Diameter

Standard	**31.959 ~ 31.975 mm (1.2582 ~ 1.2589 in.)**
Service Limit	**31.935 mm (1.257 in.)**

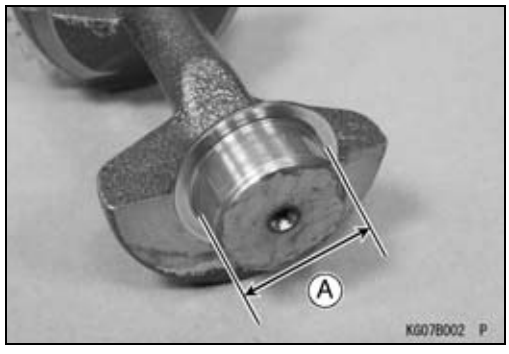

- Measure the inside diameter [A] of the balancer shaft bearing on the crankcase at several points.

★If inside diameter is more than the service limit, replace the crankcase with a new one.

Balancer Shaft Bearing Inside Diameter (Crankcase)

Standard	**32.000 ~ 32.016 mm (1.2598 ~ 1.2605 in.)**
Service Limit	**32.06 mm (1.262 in.)**

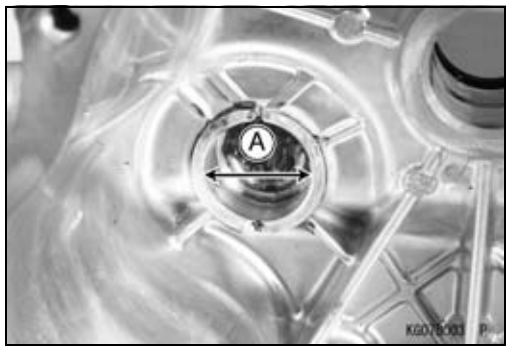

- Measure the inside diameter [A] of the balancer shaft bearing on the crankcase cover at several points.

★If inside diameter is more than the service limit, replace the crankcase cover with a new one.

Balancer Shaft Bearing Inside Diameter (Crankcase cover)

Standard	**32.000 ~ 32.016 mm (1.2598 ~ 1.2605 in.)**
Service Limit	**32.06 mm (1.262 in.)**

Breather

The function of the breather is to create a negative pressure in the crankcase which prevents oil from being forced out of the engine through the piston rings, oil seals or gaskets. A sealed-type crankcase emission control system is used to prevent blow-by gases from emitting in the air. The blow-by gases are drawn into the clean side of the air cleaner through the crankcase and the cylinder head and mixed with the clean air flow, and subsequently comes into the combustion chamber through the carburetor.

Oil is primarily separated from the gases while passing through the inside of the rocker chamber from the crankcase, and secondly separated from the gases in the breather chamber, and then brought back to the crankcase.

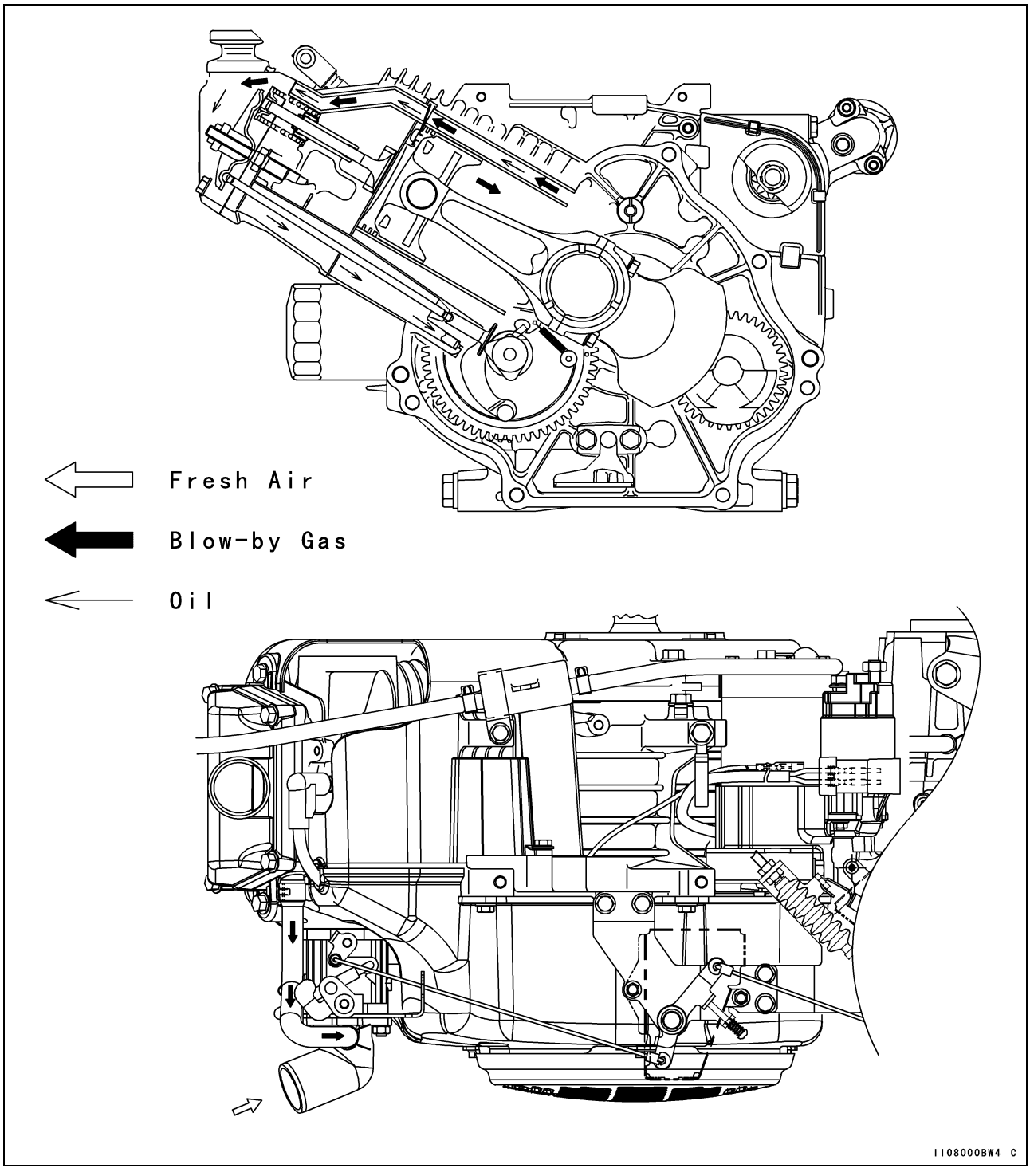

Breather

Breather Valve Removal

- Remove the cylinder head assembly (see Cylinder Head Assembly Removal in the Engine Top End chapter).
- Unscrew the breather valve screw [A].

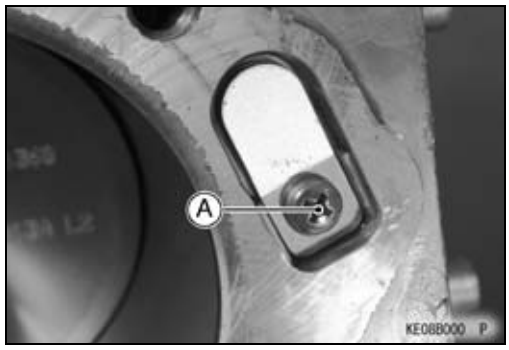

Breather Valve Installation

- Install the reed valve [A] and back plate [B] , Then tighten the breather valve screw [C].

  Torque - Breather Valve Screw: 3.4 N·m (0.35 kgf·m, 30 in·lb)

- Install the cylinder head assembly (see Cylinder Head Assembly Installation in the Engine Top End chapter).

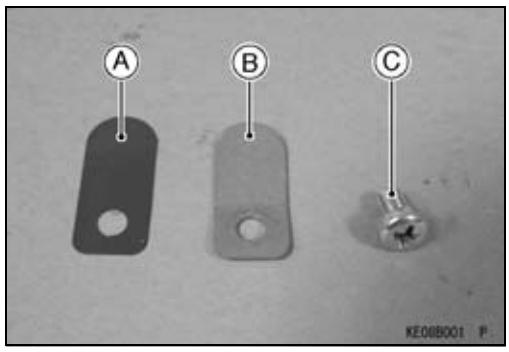

Breather Valve Inspection

- Remove the breather valve (see Breather Valve Removal).
- Inspect the reed valve for breakage, hair cracks or distortion, replace it if necessary.
- Inspect the back plate for damage or rough contact surface, replace it if necessary.
- Inspect the valve seating surface. The surface should be free of nicks or burrs.
- Align center of the valve seat with center of the reed valve and back plate, then tighten the breather valve screw.

Transmission

Table of Contents

Exploded View 9-2
Specifications 9-10
Special Tools and Sealant 9-11
Transmission Oil 9-12
Transmission Oil Level Inspection 9-12
Transmission Oil Change 9-12
Transmission Case 9-13
Transmission Case Removal 9-13
Transmission Case Installation ... 9-14
Drive Shaft Nut Removal (KAF400-B) 9-15
Drive Shaft Nut Installation (KAF400-B) 9-16
Transmission Case Disassembly . 9-16
Transmission Case Assembly 9-20
Transmission and Shift Mechanism .. 9-28
Transmission Cable Installation ... 9-28
Transmission Shift Cable Inspection 9-29
Shift Rod Bending Inspection 9-29
Shift Fork Ear and Shifter Groove Wear Inspection 9-29
Transmission and Shift Mechanism Inspection 9-30
2WD/4WD Shift Mechanism (KAF400-A/C) 9-31
2WD/4WD Shift Cable Adjustment 9-31
2WD/4WD Shift Cable Lubrication 9-31
2WD/4WD Shift Cable Inspection 9-32
2WD/4WD Shift Mechanism Removal 9-32
2WD/4WD Shift Mechanism Inspection 9-32
Differential Gears and Shift Mechanism 9-33
Differential Shift Cable Adjustment 9-33
Differential Shift Cable Lubrication 9-33
Differential Shift Cable Inspection 9-34
Differential Shift Mechanism Removal 9-34
Differential Shift Mechanism Installation 9-35
Differential Shift Mechanism Inspection 9-35
Differential Gear Removal 9-35
Differential Gear Installation 9-36
Differential Gear Inspection 9-37
Bearings and Oil Seal 9-38
Bearing Replacement 9-38
Ball Bearing Inspection 9-38
Needle Bearing Inspection 9-38
Oil Seal Inspection 9-38
Transmission Sectional Figure 9-39

Exploded View

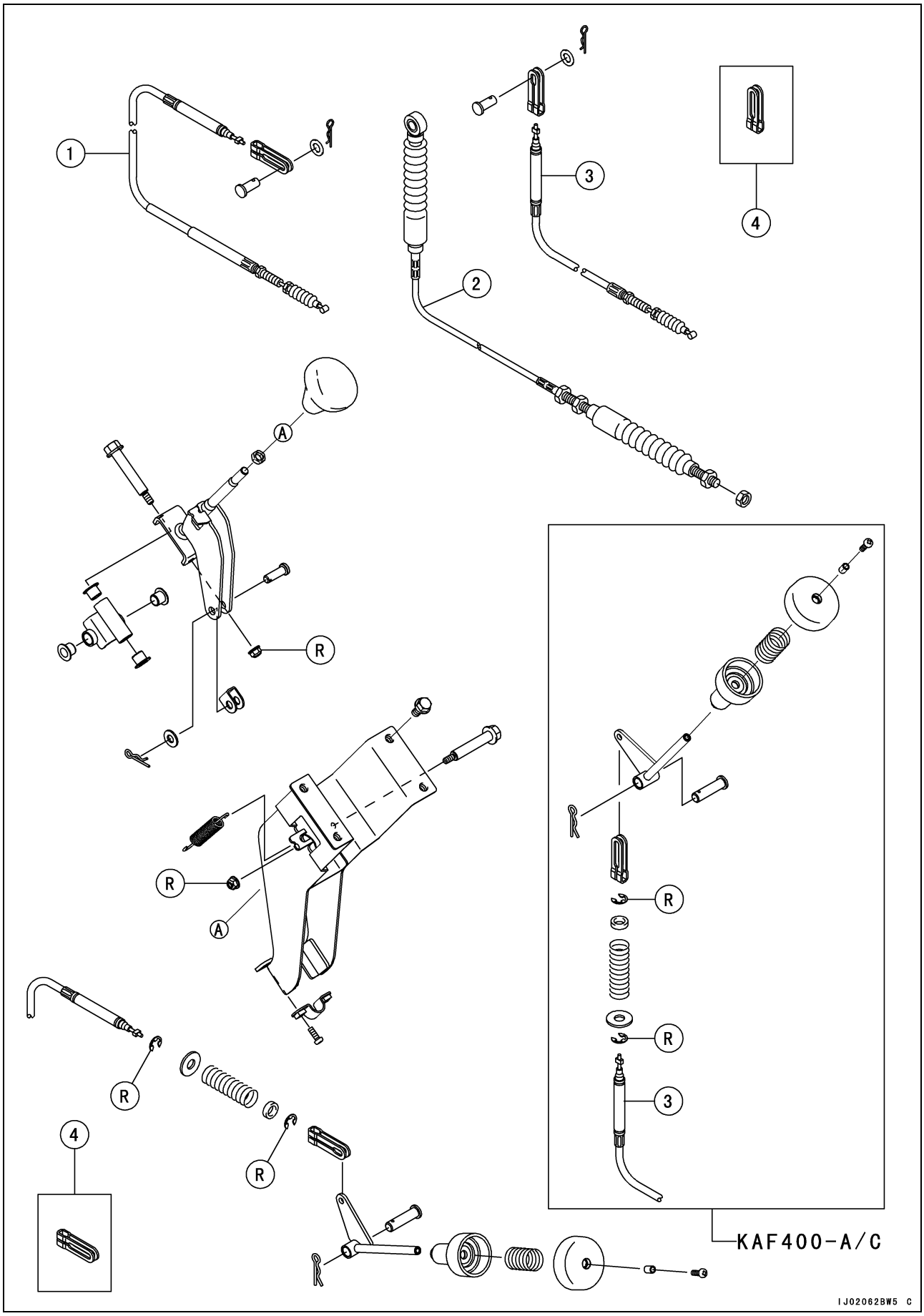

Exploded View

1. Differential Shift Cable
2. Transmission Cable
3. 2WD/4WD Shift Cable (KAF400-A/C)
4. KAF400-A1 ~ A9/B1 ~ B9/C1 ~ C9

R: Replacement Parts

Exploded View

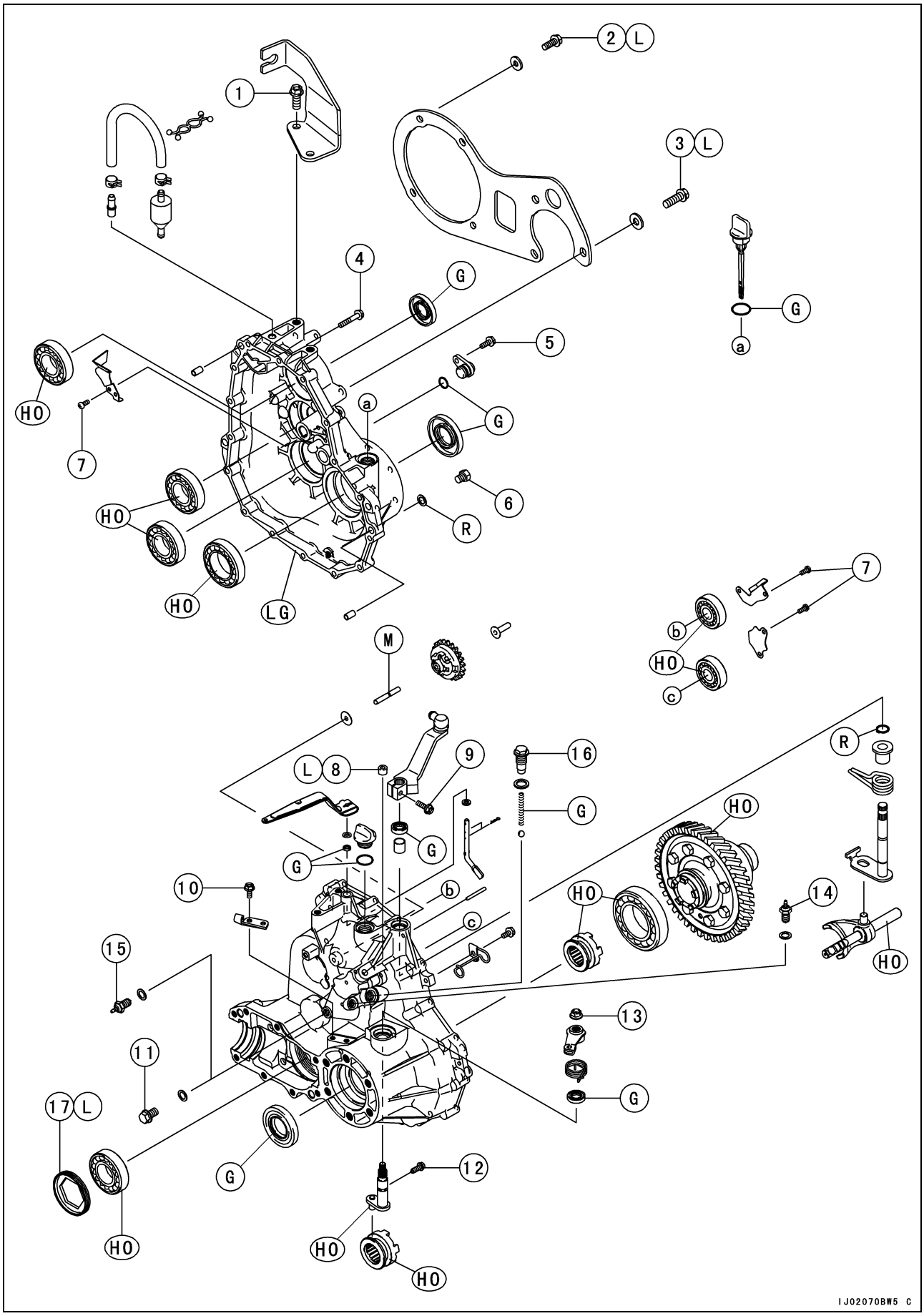

Exploded View

No.	Fastener	Torque			Remarks
		N·m	kgf·m	ft·lb	
1	Transmission Cable Holder Bolts	42	4.2	31	
2	Connecting Plate Bolts (M8)	28	2.9	21	L
3	Connecting Plate Bolts (M10)	55	5.6	41	L
4	Transmission Case Bolts	8.8	0.90	78 in·lb	
5	Speed Sensor Cap Bolt	8.8	0.90	78 in·lb	
6	Transmission Oil Drain Plug	15	1.5	11	
7	Cover Screws	4.0	0.40	35 in·lb	
8	Oil Line Plug	9.8	1.0	87 in·lb	L
9	Shift Shaft Lever Bolt	14	1.4	10	
10	Differential Shift Cable Holder Bolts	8.8	0.90	78 in·lb	
11	Plug Bolt (except Europe Model)	15	1.5	11	
12	Shift Shaft Stop Bolt	8.8	0.90	78 in·lb	
13	Differential Shift Shaft Nut	20	2.0	14	
14	Neutral Switch	15	1.5	11	
15	Reverse Switch (Europe Model)	15	1.5	11	
16	Positioning Bolt	25	2.5	18	
17	Bearing Holder	137	14	101	L

G: Apply grease
HO: Apply hypoid gear oil.
L: Apply a non-permanent locking agent.
LG: Apply liquid gasket (Liquid Gasket, TB1216B: 92104-1064).
M: Apply molybdenum disulfide grease.
R: Replacement Parts

Exploded View

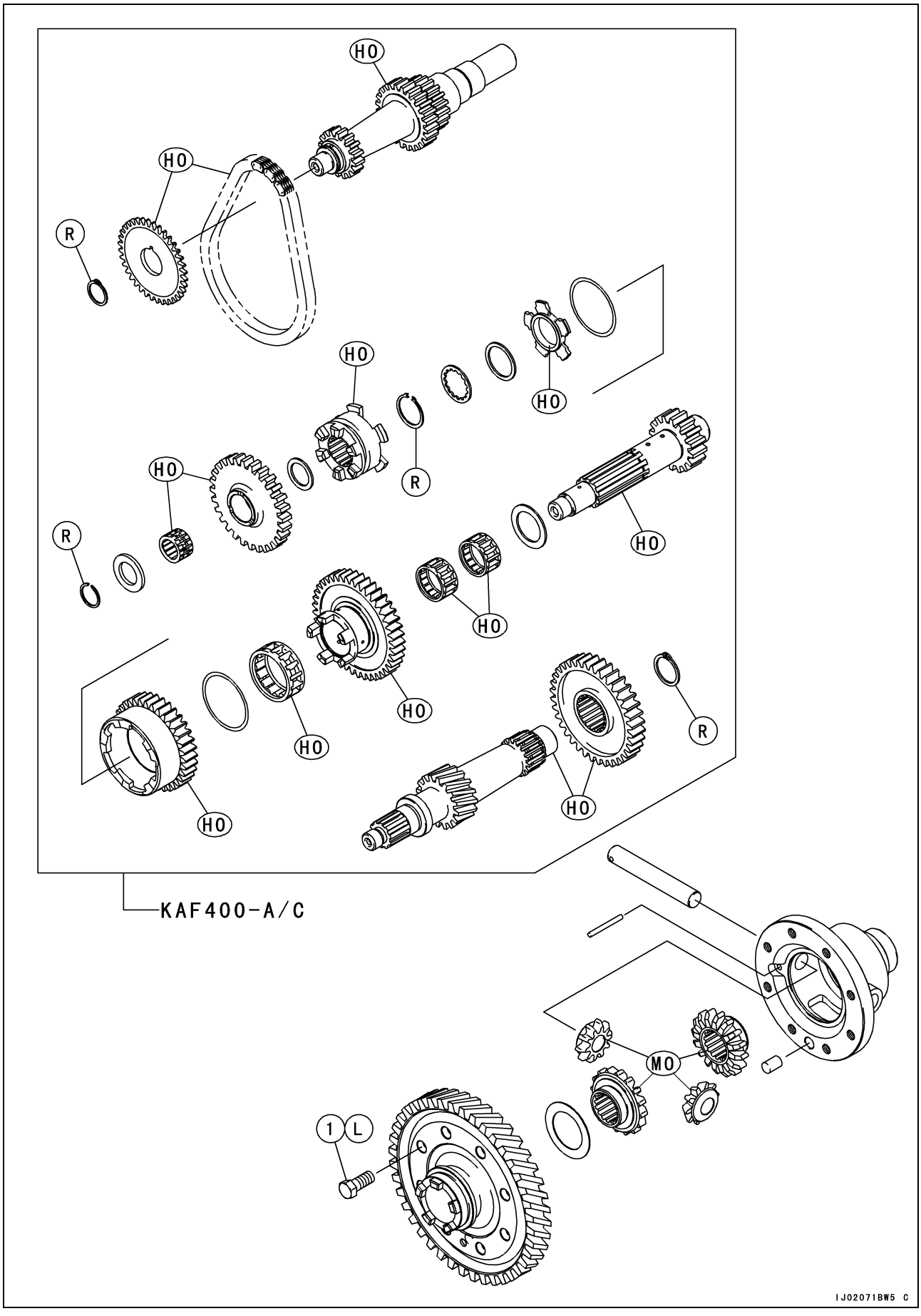

Exploded View

No.	Fastener	Torque			Remarks
		N·m	kgf·m	ft·lb	
1	Differential Gear Housing Bolts	57	5.8	42	L

L: Apply a non-permanent locking agent.
HO: Apply hypoid gear oil.
MO: Apply molybdenum disulfide oil solution (mixture of the engine oil and molybdenum disulfide grease in a weight ratio 10 : 1).
R: Replacement Parts

Exploded View

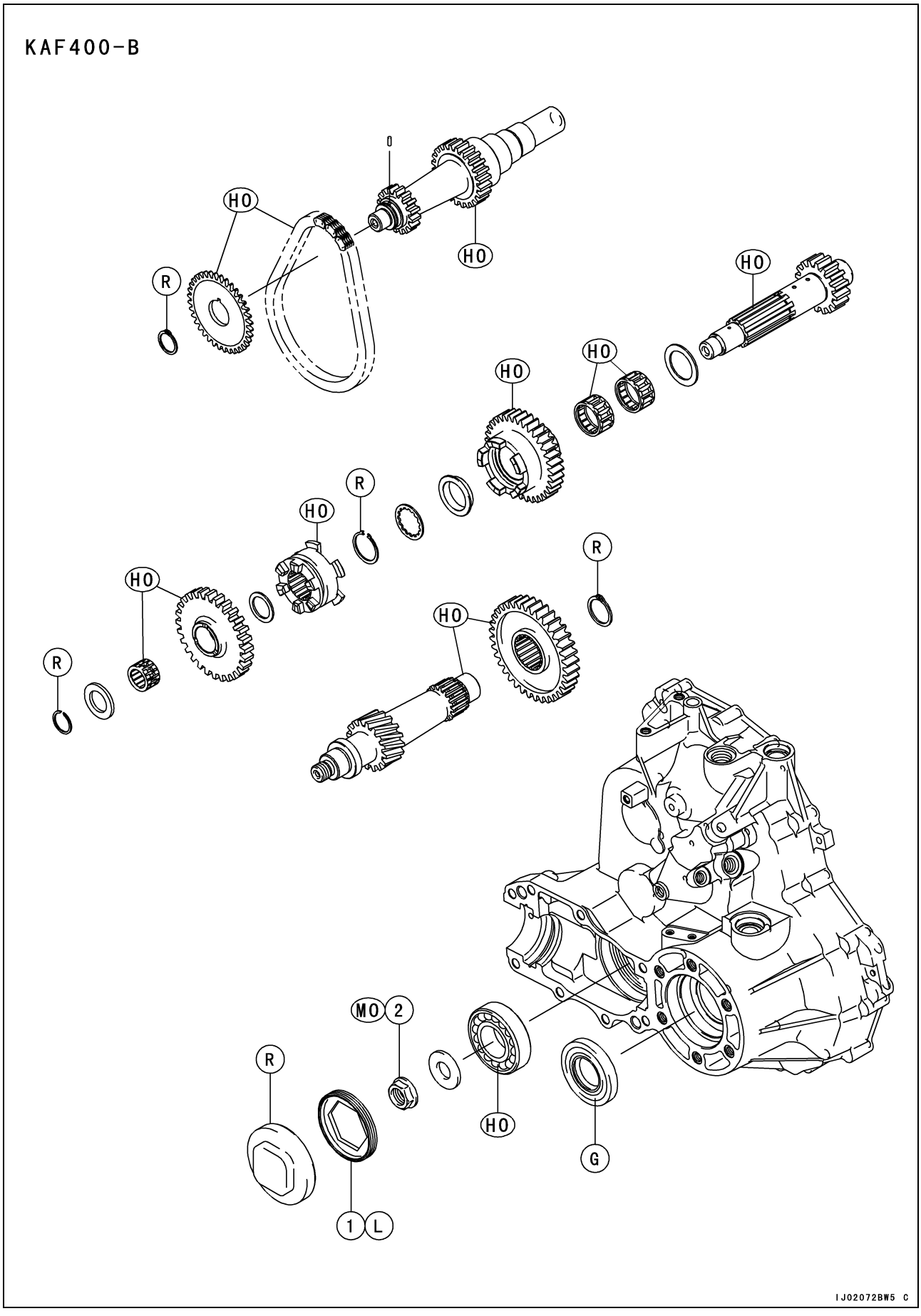

Exploded View

No.	Fastener	Torque			Remarks
		N·m	kgf·m	ft·lb	
1	Bearing Holder	137	14	101	L
2	Drive Shaft Nut	137	14	101	MO

G: Apply grease.
HO: Apply hypoid gear oil.
L: Apply a non-permanent locking agent.
MO: Apply molybdenum disulfide oil solution (mixture of the engine oil and molybdenum disulfide grease in a weight ratio 10 : 1).
R: Replacement Parts

Specifications

Item	Standard	Service Limit
Transmission Oil		
Type	API “GL-5” Hypoid gear oil	– – –
Viscosity	SAE90: above 5°C (41°F) or SAE80: below 5°C (41°F)	– – –
Capacity:		
KAF400-A/C	2.4 L (2.5 US qt)	– – –
KAF400-B	2.2 L (2.3 US qt)	– – –
Oil Level	Between H and L lines on dipstick	– – –
Transmission and Shift Mechanism		
Shift Fork Ear Thickness	5.9 ~ 6.0 mm (0.2322 ~ 0.2362 in.)	5.8 mm (0.228 in.)
Shifter Groove Width	6.05 ~ 6.15 mm (0.2382 ~ 0.2421 in.)	6.25 mm (0.2462 in.)
Reverse Chain 20-link Length	190.50 ~ 190.97 mm (7.500 ~ 7.518 in.)	193.4 mm (7.614 in.)
2WD/4WD Shift Mechanism (KAF400-A/C)		
Shifter Block Outside Diameter	13.95 ~ 14.00 mm (0.549 ~ 0.551 in.)	13.8 mm (0.543 in.)
Shifter Groove Width	14.0 ~ 14.2 mm (0.551 ~ 0.559 in.)	14.3 mm (0.563 in.)
Differential Gears and Shift Mechanism		
Shift Shaft Pin Diameter	8.4 ~ 8.6 mm (0.331 ~ 0.339 in.)	8.3 mm (0.327 in.)
Shifter Groove Width	9.0 ~ 9.1 mm (0.354 ~ 0.358 in.)	9.2 mm (0.362 in.)

Special Tools and Sealant

Outside Circlip Pliers:
57001-144

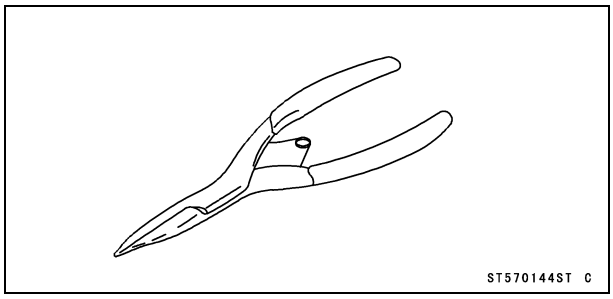

Oil Seal & Bearing Remover:
57001-1058

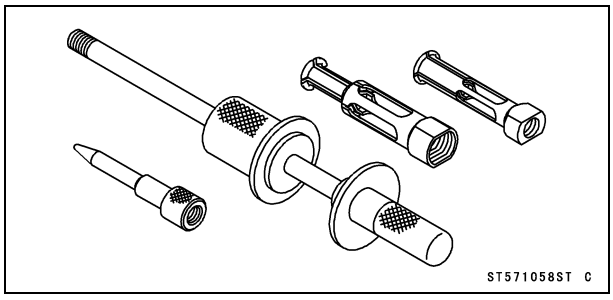

Bearing Driver Set:
57001-1129

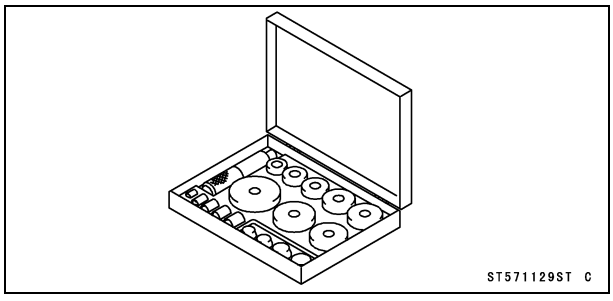

Socket Wrench, Hex 41:
57001-1402

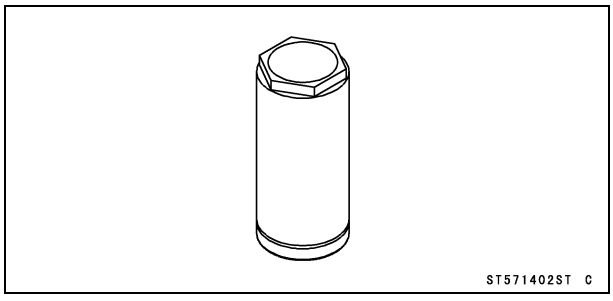

Oil Seal Driver, ϕ70:
57001-1506

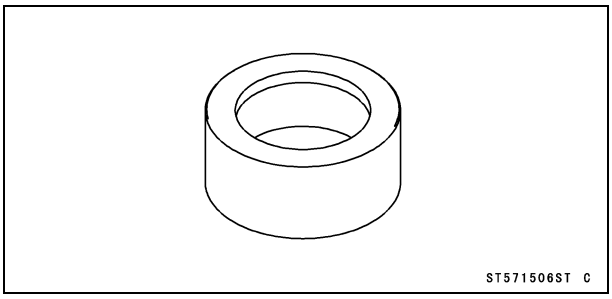

Assembly Jig:
57001-1631

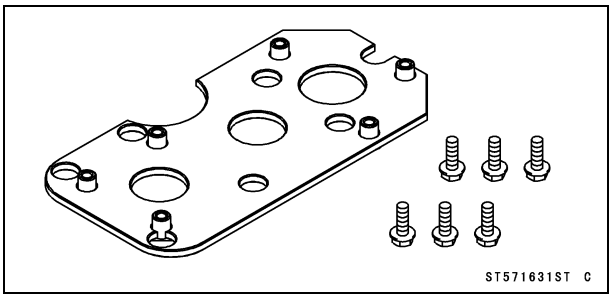

Liquid Gasket, TB1216B:
92104-1064

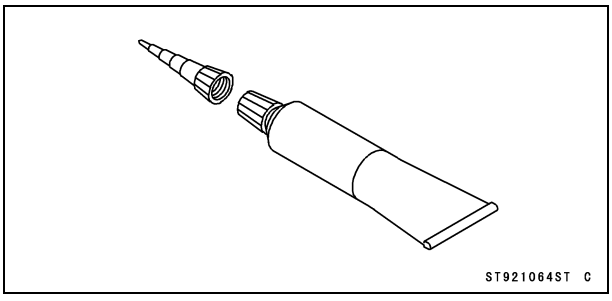

Transmission Oil

NOTICE
Vehicle operation with insufficient, deteriorated or contaminated transmission oil will cause accelerated wear and may result in transmission failure.

Transmission Oil Level Inspection

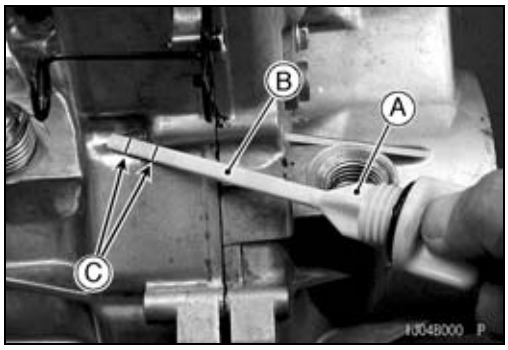

NOTE

○*If the vehicle has just been used wait several minutes for all the oil to settle down.*

- Park the vehicle on level ground, and tilt up the cargo bed.
- Unscrew the oil gauge [A], wipe its dipstick [B] dry, and insert it into the filler opening but DO NOT SCREW IT IN.
- Pull out the dipstick and check the oil level. The oil level should be between the upper (H) and lower (L) level lines [C].

★If the oil level is too high, remove the excess oil, using a syringe or some other suitable device, through the oil filler opening.

★If the oil level is too low, add the necessary amount of oil through the oil filler opening. Use the same type and make of oil that is already in the transmission.

NOTE

○*If the transmission oil type and make are unknown, use any brand of the specified oil to top up the level in preference to running the transmission with the oil level low. Then, at your earliest convenience, change the oil completely.*

Transmission Oil Change

- Refer to the Transmission Oil Change in the Periodic Maintenance chapter.

Transmission Case

Transmission Case Removal

- Drain:
  Transmission Oil (see Transmission Oil Change in the Periodic Maintenance chapter)
- Remove:
  Cargo Bed (see Frame chapter)
  Propeller Shafts (KAF400-A/C, see Final Drive chapter)
  Bevel Gear Case (KAF400-A/C, see Final Drive chapter)
  Rear Wheels (see Wheels/Tires chapter)
  Rear Brake Panels (see Brakes chapter)
  Rear Shock Absorbers (See Suspension chapter)
  Torque Converter Case (see Converter System chapter)

- Remove:
  Control Panel Assembly [A] (see Fuel System chapter)
  Transmission Shift Shaft Lever [B] and Holder [C]

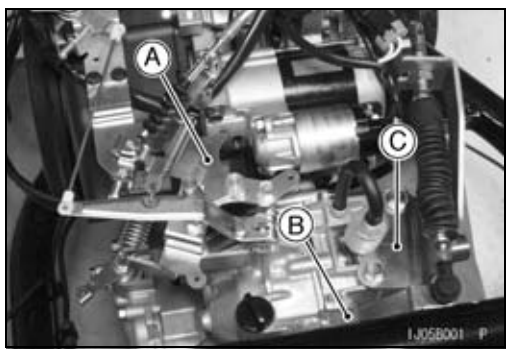

- Remove:
  Differential Shift Cable Holder [A] and Cable End [B]
  2WD/4WD Shift Cable Holder [C] and Cable End [D] (KAF400-A/C)
  Neutral Switch Lead Connector [E]
  Reverse Switch Lead Connector (Europe Model)

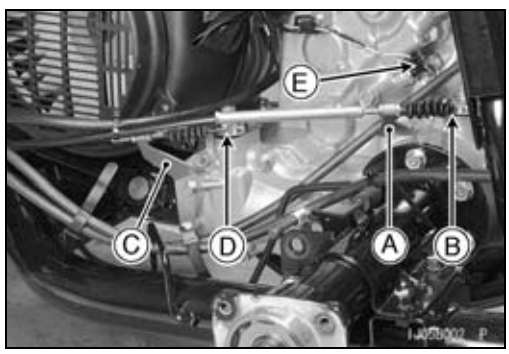

- Hold the transmission case on a stand or jack.
- Loosen:
  Rear Axle Bracket Flange Bolts [A] (Left and Right)
- Remove:
  Rear Axle Bracket Bolts [B] (Left and Right)

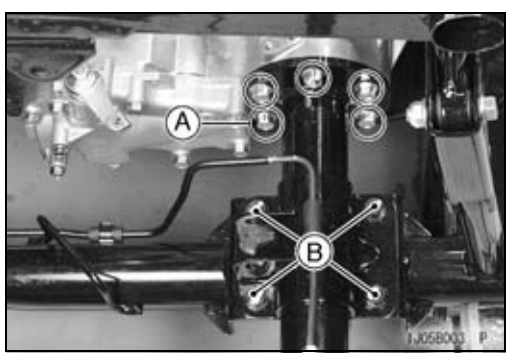

Transmission Case

- Remove:
  Connecting Plate Bolts [A] and Washers
  Connecting Plate [B]

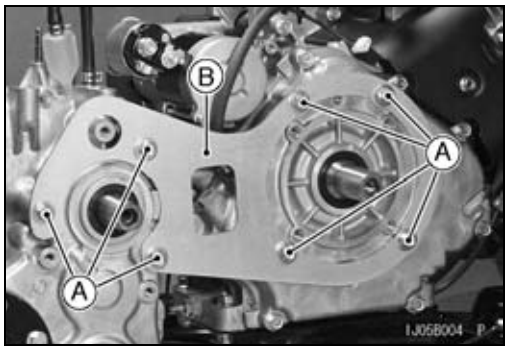

- Lift up the transmission case until the axle bracket is removed.
- Remove:
  Rear Axle Bracket Bolts (Left and Right)
  Rear Axles and Rear Axle Bracket Assemblies [A] (Left and Right)

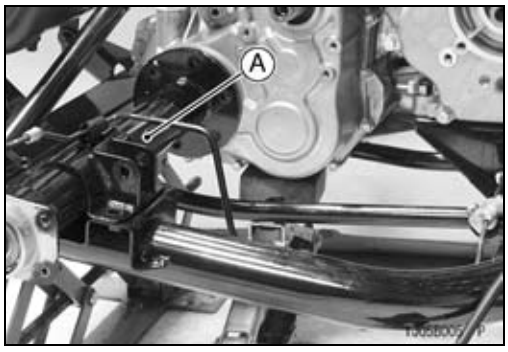

- Remove:
  Transmission Case [A]

Transmission Case Installation

- Hold the transmission case on a stand or jack and hold it.
- Install:
  Rear Right Axle and Rear Axle Bracket Assembly [A]
  Rear Axle Bracket Flange Bolts (temporarily)
- Set the differential shift lever [B] to differential lock position and install the rear left axle and rear axle bracket assembly [C].
- Install:
  Rear Axle Bracket Bolts (temporarily)

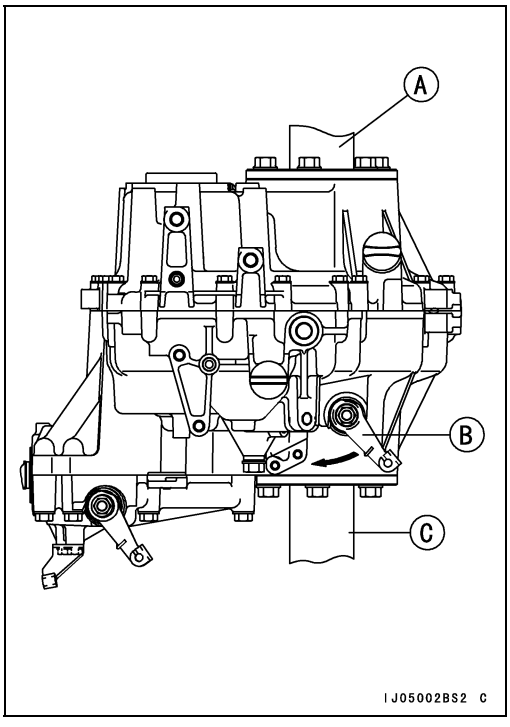

Transmission Case

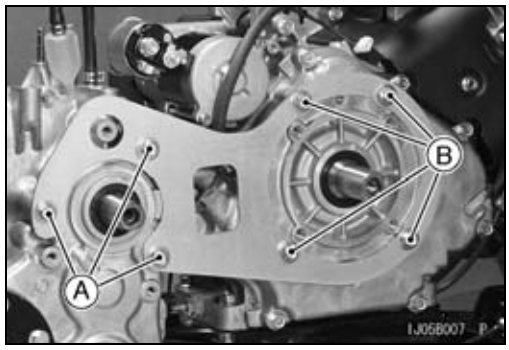

- Apply a non-permanent locking agent:
  Connecting Plate Bolts (M10) [A]
  Connecting Plate Bolts (M8) [B]
- Install the washer and tighten the connecting plate bolts (M10 and M8) lightly by hand.
- Install the assembly jig and tighten the bolts (see Engine Installation in the Engine Removal/Installation chapter).

  Special Tool - Assembly Jig: 57001-1631
- Tighten:

  Torque - Connecting Plate Bolts (M10): 55 N·m (5.6 kgf·m, 41 ft·lb)
  Connecting Plate Bolts (M8): 28 N·m (2.9 kgf·m, 21 ft·lb)

★If the engine was removed, refer to the Engine Removal/Installation chapter.

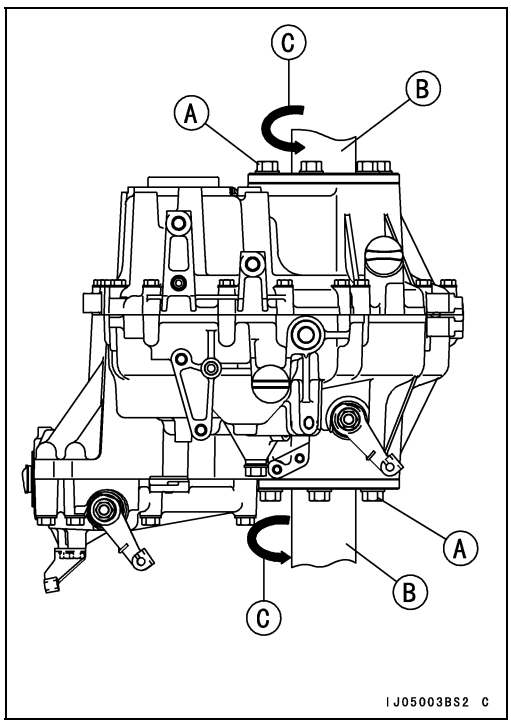

- Tighten the rear axle bracket flange bolts [A] while turning the axle bracket [B] toward the front side [C].

  Torque - Rear Axle Bracket Flange Bolts: 49 N·m (5.0 kgf·m, 36 ft·lb)
  Rear Axle Bracket Bolts: 40 N·m (4.1 kgf·m, 30 ft·lb)
- Remove the assembly jig.

Drive Shaft Nut Removal (KAF400-B)

- Drain:
  Transmission Oil (see Transmission Oil Change in the Periodic Maintenance chapter)
- Remove:
  Rear Wheels (see Wheels/Tires chapter)
  Rear Brake Panels (see Brakes chapter)
  Rear Shock Absorbers (see Suspension chapter)
  Left Rear Axle Bracket and Axle Shaft (see Transmission Case Removal)

Transmission Case

- Install:
  Bevel Gear Holder [A]

  Special Tool - Bevel Gear Holder: 57001-1638
- Make a hole in the plug [B] with a chisel, and pry the plug off.

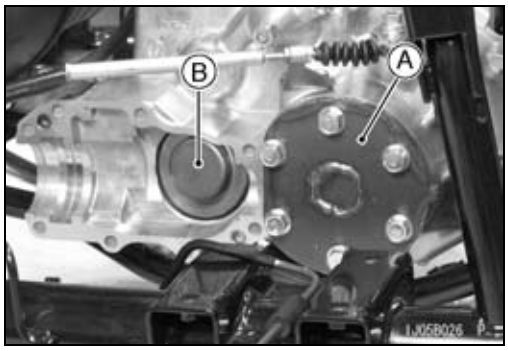

NOTICE
Do not insert the chisel deep in the plug. This will damage the inside parts.

- Set the “Differential Lock” position.
- Remove:
  Drive Shaft Nut [A]
  Washer

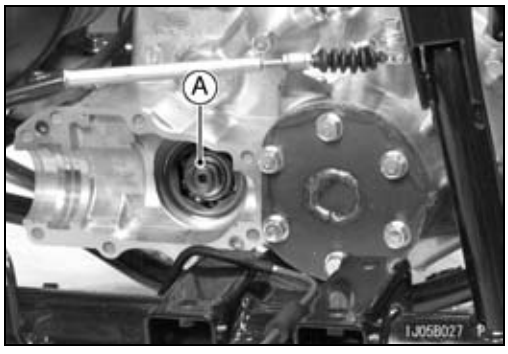

Drive Shaft Nut Installation (KAF400-B)

- Apply molybdenum disulfide oil to the threads and seating surface of the drive shaft nut [A].
- Install:
  Washer [B]
  Drive Shaft Nut
- Tighten:

  Torque - Drive Shaft Nut: 137 N·m (14 kgf·m, 101 ft·lb)

  Special Tool - Bevel Gear Holder: 57001-1638
- Install the plug [C] until it is bottomed.

  Special Tool - Oil Seal Driver, ϕ70: 57001-1506

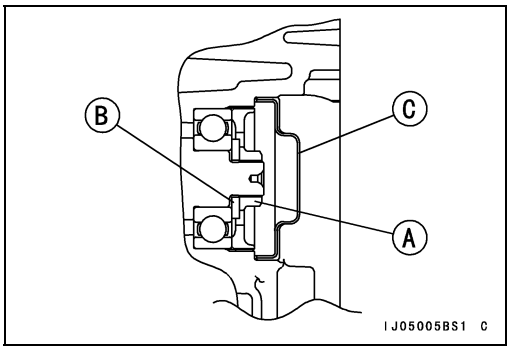

Transmission Case Disassembly

- Remove:
  Drive Bevel Gear (KAF400-A/C, see Final Drive chapter)
  Drive Shaft Nut (KAF400-B, see Drive Shaft Nut Removal)
  Transmission Case (see Transmission Case Removal)

- Remove:
  Transmission Case Bolts [A]
  Transmission Case (Right) [B]

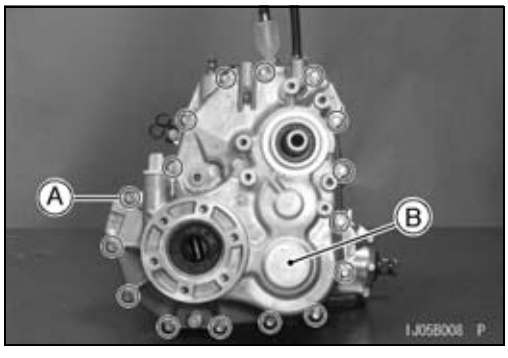

Transmission Case

- Remove:
  Drive Shaft [A]
  Differential Gear Assembly [B]

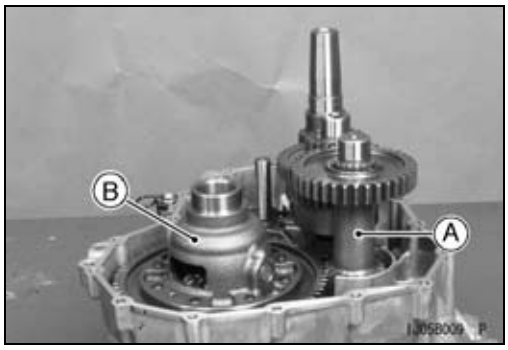

- Remove:
  Positioning Bolt [A]
  Washer [B]
  Spring [C]
  Steel Ball [D]

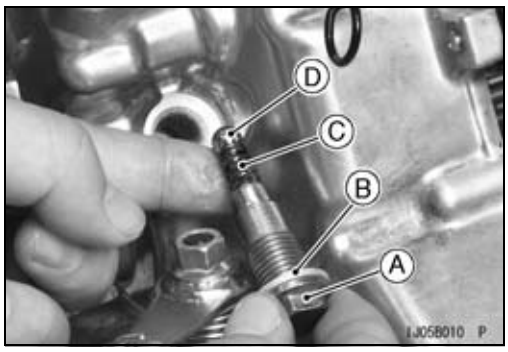

- Remove:
  Pin [A]
- Push up the shift shaft [B].

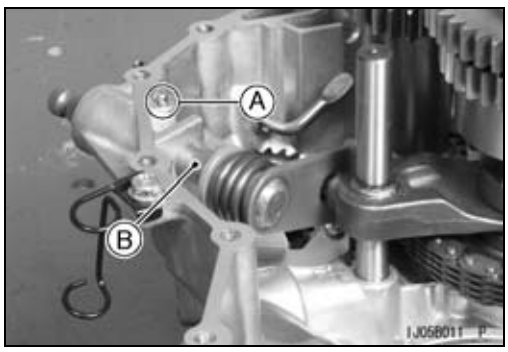

- Remove the following parts at same time.
  Transmission Shaft [A]
  Driven Shaft [B]
  Shift Rod [C]
  Reverse Chain [D]

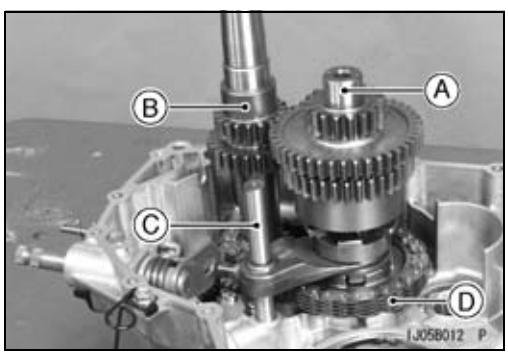

- Remove:
  Shift Shaft [A]
  Snap Pins [B]
  Governor Shaft [C]
  Governor Assembly [D] (see Fuel System chapter)

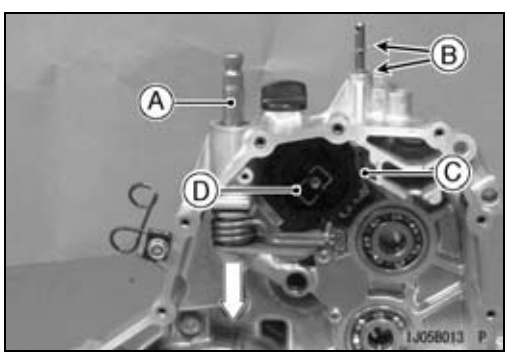

Transmission Case

- Using the socket wrench [A] remove the bearing holder [B].

  Special Tool - Socket Wrench, Hex 41: 57001-1402

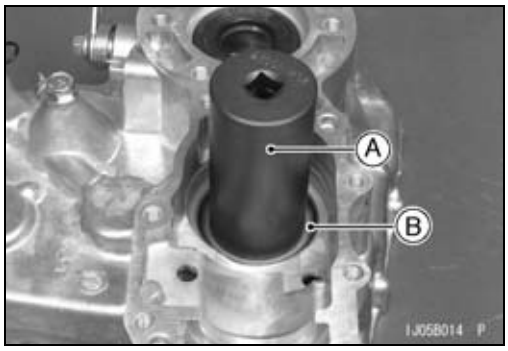

- Remove:
  Circlip [A] of Transmission Shaft [B]

  Special Tool - Outside Circlip Pliers: 57001-144
- Remove:
  Collar [C]
  Sprocket [D]

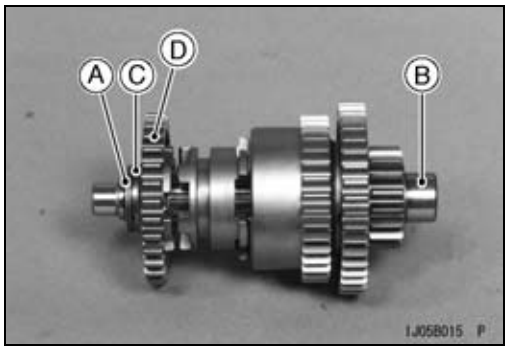

- Remove:
  Needle Bearing [A]
  Spacer [B]
  Shifter [C]

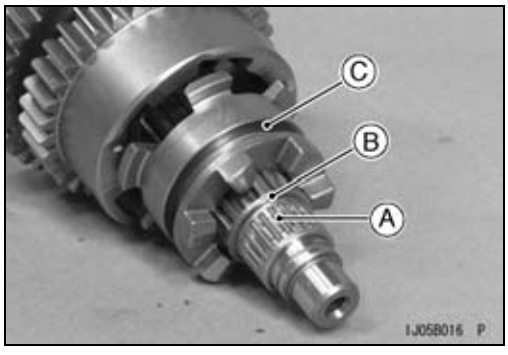

- Remove:
  Circlip

  Special Tool - Outside Circlip Pliers: 57001-144
- Remove:
  Washer [A]
  Spacer [B]
  Spacer [C]
  Spacer (54.3 × 1.0)
  High Gear [D]

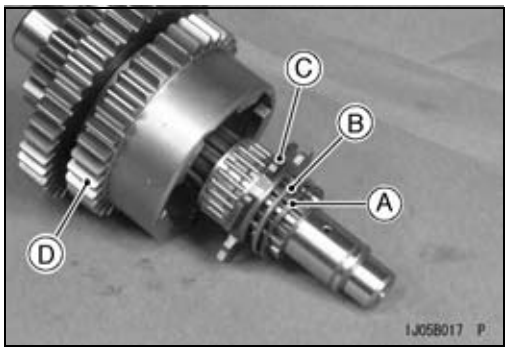

- Remove:
  Spacer (54.3 × 1.0) [A]
  Needle Bearing [B]
  Low Gear [C]
  Needle Bearing [D]

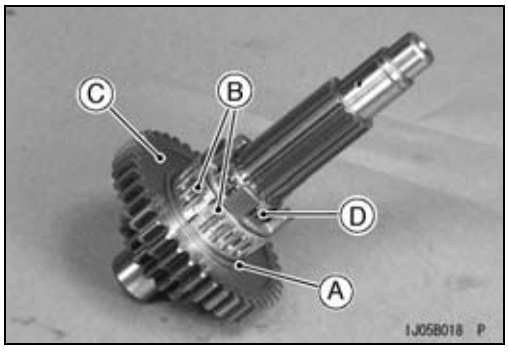

Transmission Case

- Remove:
  Needle Bearing [A]
  Washer [B]

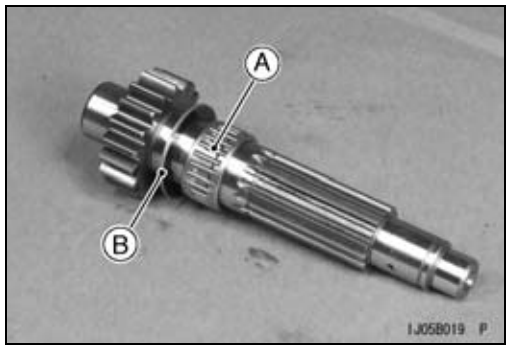

Transmission Case

Transmission Case Assembly

- Assemble the right transmission case as shown.
  Right Transmission Case [A]
  Ball Bearing [B]
  Oil Seal [C]
  6 mm (0.24 in.) [D]
  Ball Bearing [E]
  Seal Side [F]
  Ball Bearing [G]
  Ball Bearing [H]
  Oil Seal [I]
  29.5 mm (1.16 in.) [J]
  Cover [K]
  Cover Screws [L]
- Tighten:

Torque - Cover Screws: 4 .0 N·m (0.40 kgf·m, 35 in·lb)

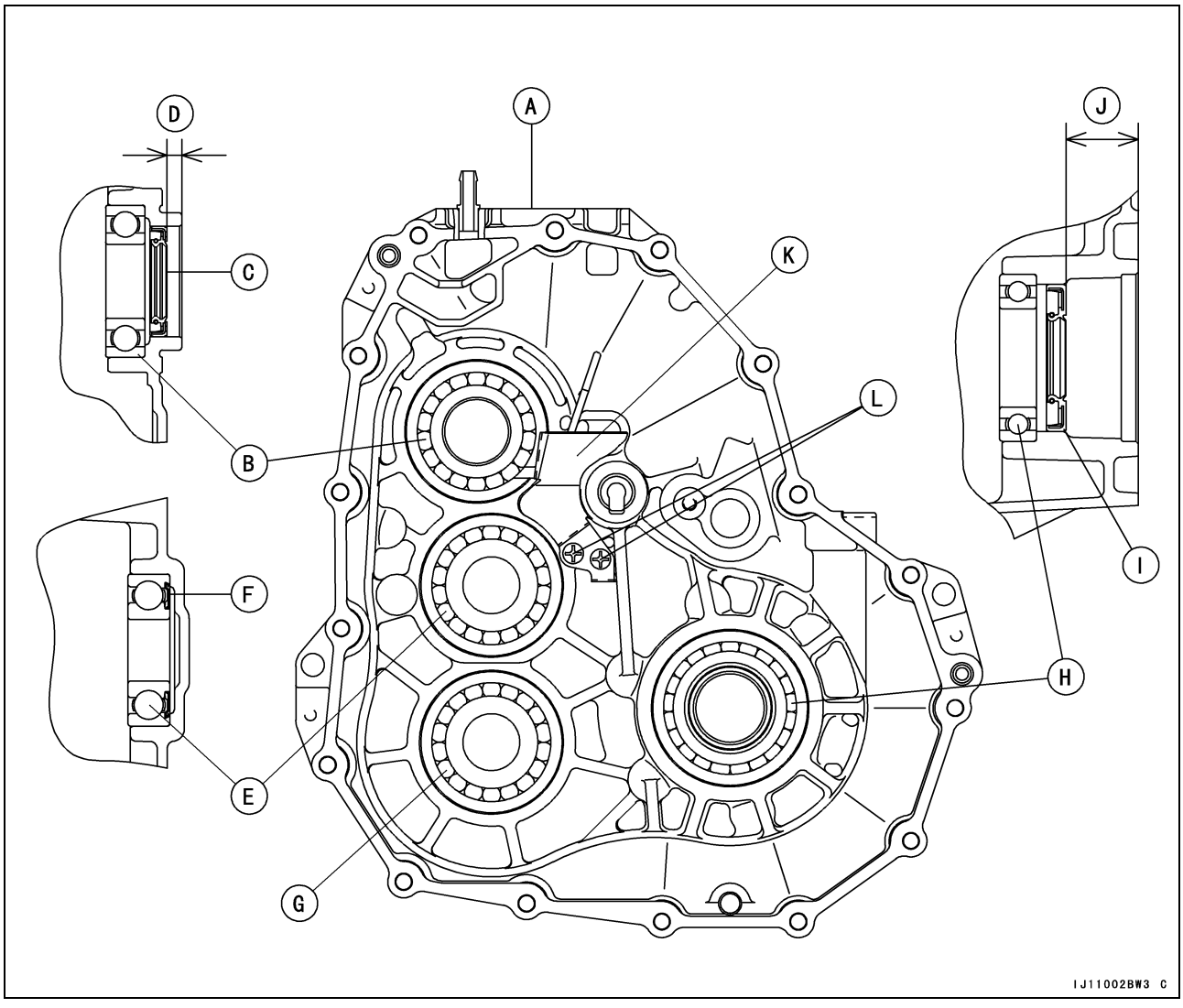

Transmission Case

- Assemble the left transmission case as shown.
  Left Transmission Case [A]
  Ball Bearing [B]
  Ball Bearing [C]
  Seal Side [D]
  Ball Bearing [E]
  Bearing Holder [F] (Refer to the following.)
  Shifter [G]
  Differential Shift Shaft [H]
  Shift Shaft Stop Bolt [I]
  Ball Bearing [J]

○Install the ball bearing [J] after assembling the shifter [G], deferential shift shaft [H] and shift shaft stop bolt [I].
  Oil Seal [K]
  13 mm (0.51 in.) [L]
  Governor Shaft [M]
  Long Side [N]
  32 mm (1.26 in.) [O]
  Cover Screws [P]

- Tighten:

Torque - Cover Screws: 4.0 N·m (0.40 kgf·m, 35 in·lb)

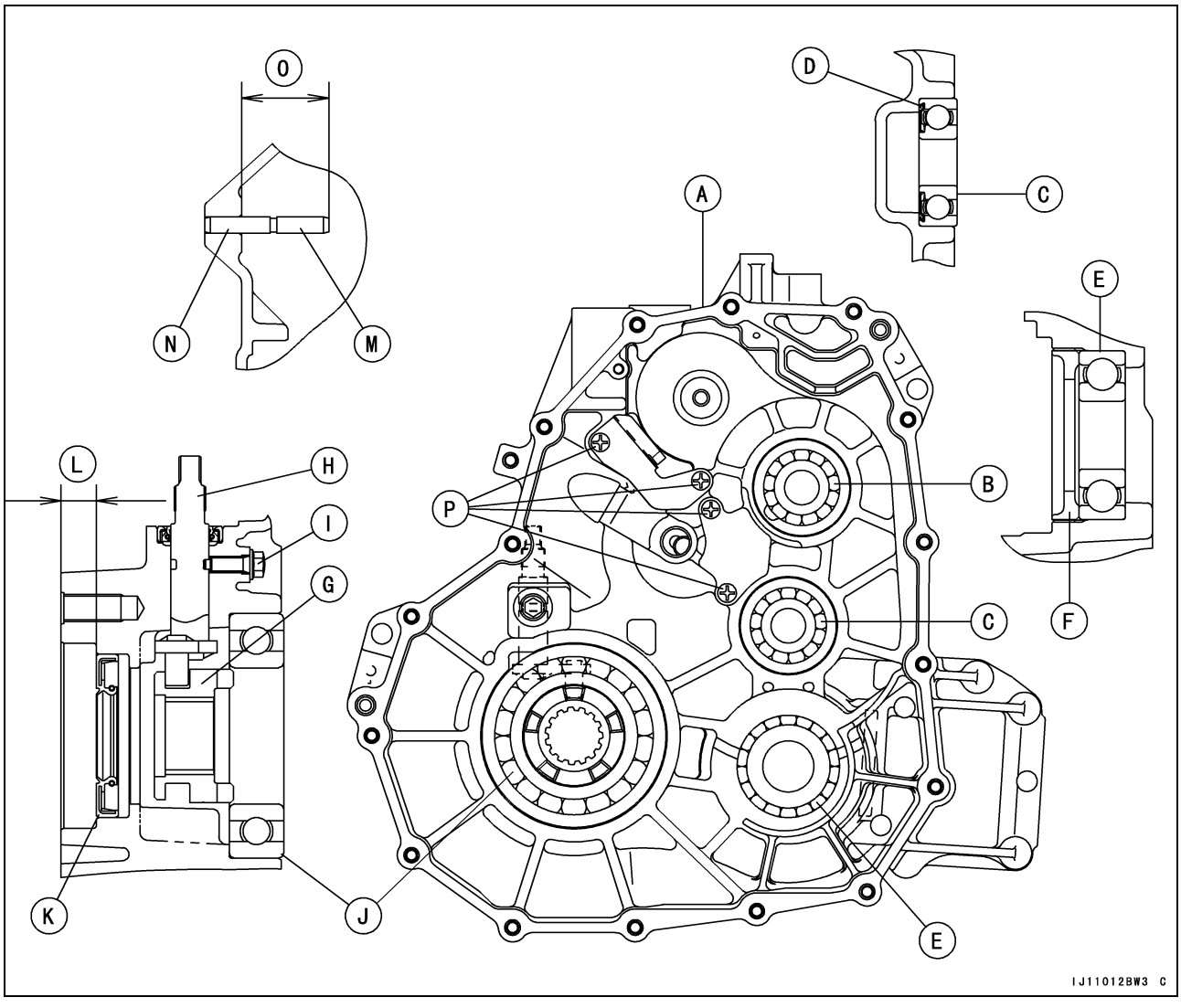

Transmission Case

○Apply a non-permanent locking agent:
Bearing Holder [F]
○Install the bearing holder so that the deep recess [A] faces outward.
○Tighten:

Torque - Bearing Holder: 137 N·m (14 kgf·m, 101 ft·lb)

Special Tool - Socket Wrench, Hex 41: 57001-1402

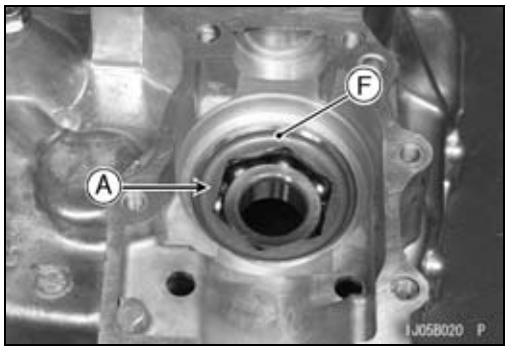

- Install the oil seals to the left transmission case as shown.
  Left Transmission Case [A]
  Oil Seal [B]
  0.5 mm (0.02 in.) [C]
  Bushing [D]
  Flush [E]
  Oil Seal [F]
  Flush [G]
  Oil Seal [H]
  Flush [I]
  Oil Line Plug [J]
- Apply a non-permanent locking agent to the plug, and tighten it.

Torque - Oil Line Plug: 9.8 N·m (1.0 kgf·m, 87 in·lb)

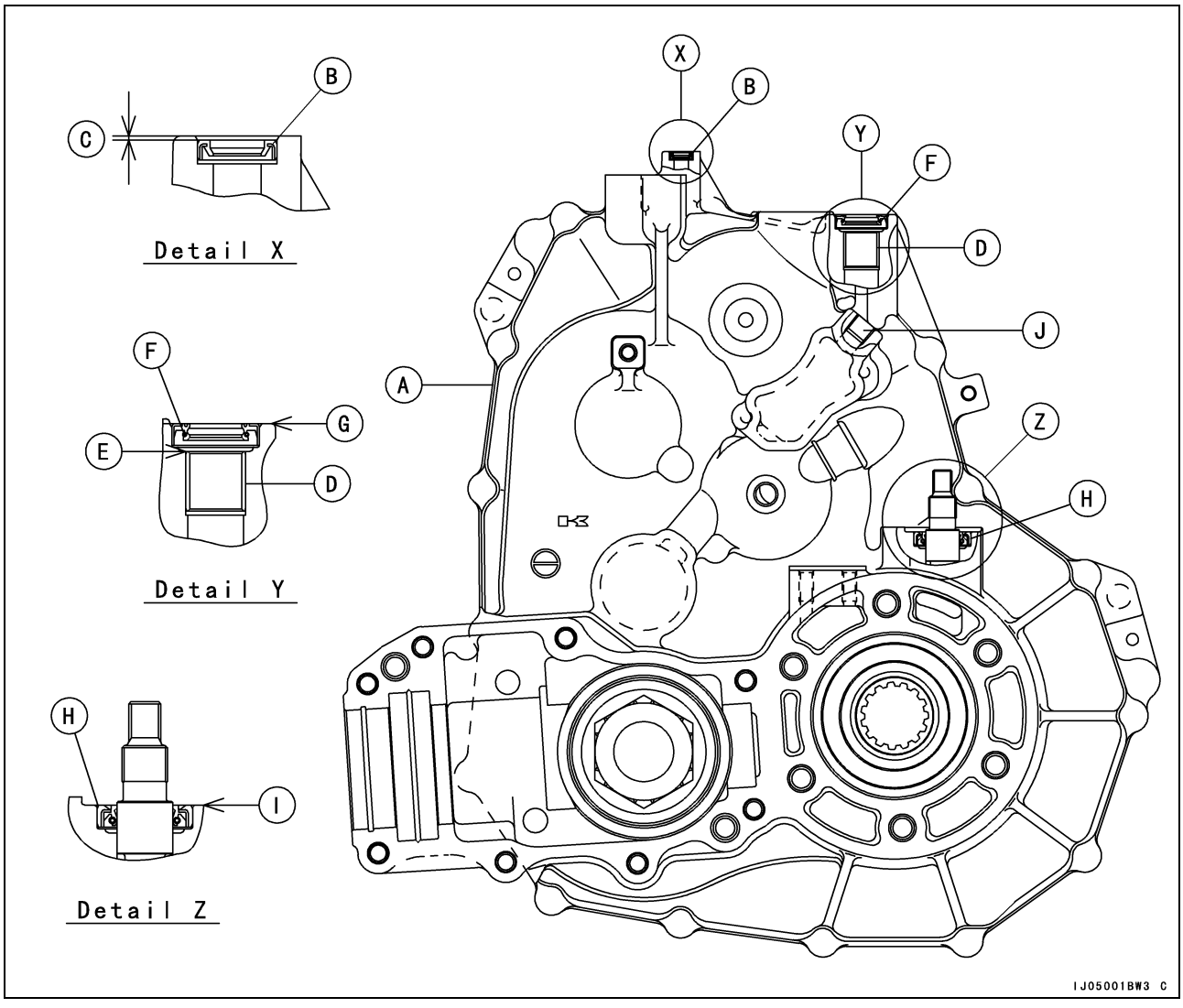

Transmission Case

- Replace all circlips that were removed with new ones.

NOTE

○*To install a circlip without damage, first fit the circlip onto the shaft and then expand it just enough to install. Hence, use a suitable gear to push the circlip into place.*

- Apply transmission oil:
  Ball and Needle Bearings
  Bearing of Shaft
  Slide of Shaft
  Slide of Governor Gear
  Slide and Tooth of Gears
  Shifters
  Spacers
- Apply grease:
  Lip of Oil Seals
  O-rings
- Check that each gear, sprocket, and shifter spins or slides freely on its shaft without binding after assembly.
- Install:
  Governor Assembly (see Fuel System chapter)
  Governor Shaft
  Shift Shaft

Transmission Case

- Install (KAF400-A/C):
  Transmission Shaft [A]
  Circlip [B]
  Collar [C]
  Reverse Driven Sprocket [D]
  Spacer [E]
  Shifter [F]
  Circlip [G]
  Washer [H]
  Spacer [I]
  High Gear [J]
  Needle Bearing [K]
  Low Gear [L]
  Drive Gear [M]
  Spacer [N]
  Spacers [O]
  Needle Bearings [P]
  Needle Bearing [Q]
  Washer [R]

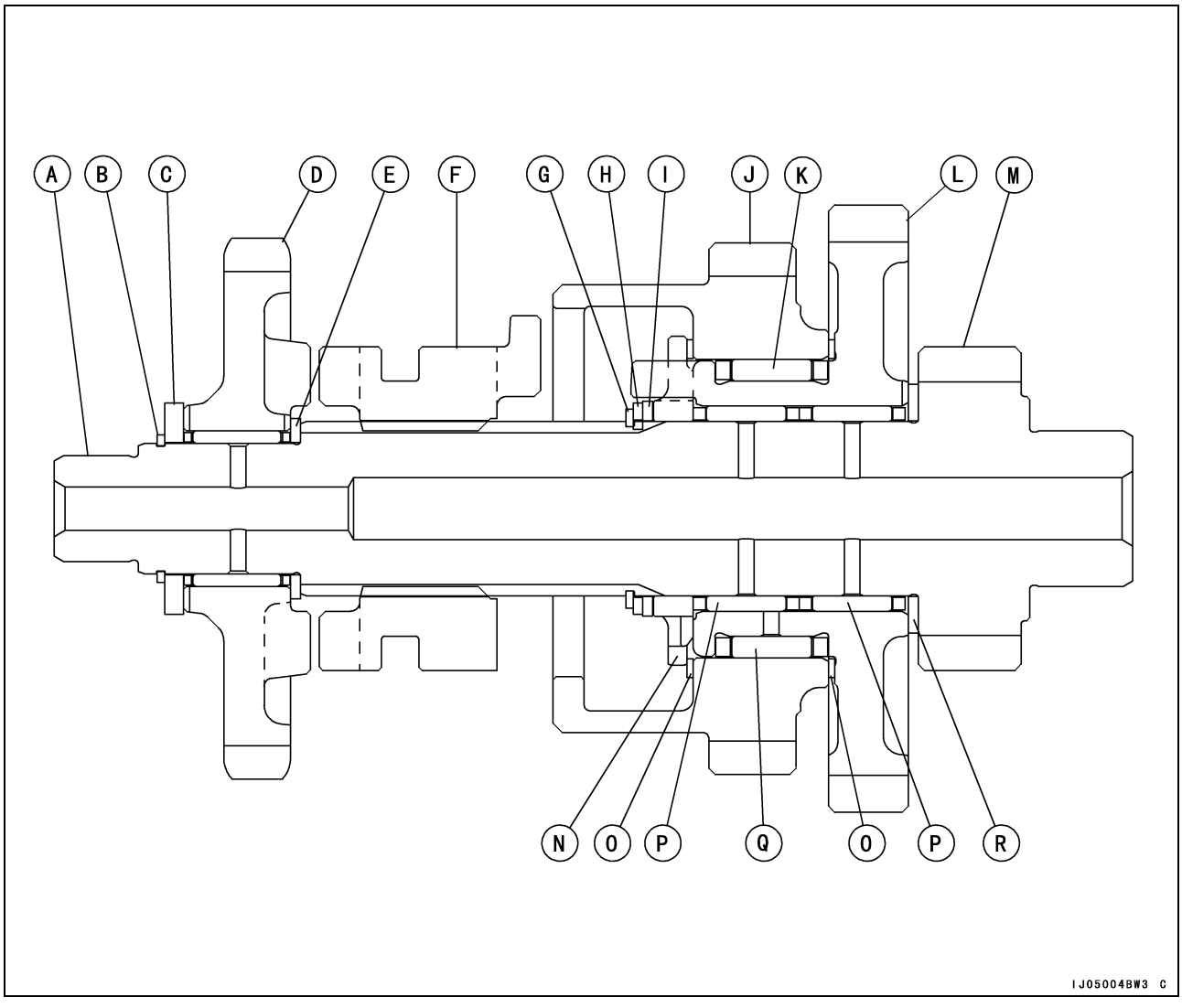

Transmission Case

- Install (KAF400-B):
  Transmission Shaft [A]
  Drive Gear [B]
  Washer [C]
  Needle Bearings [D]
  Forward Gear [E]
  Spacer [F]
  Washer [G]
  Circlip [H]
  Shifter [I]
  Spacer [J]
  Needle Bearing [K]
  Reverse Driven Sprocket [L]
  Collar [M]
  Circlip [N]

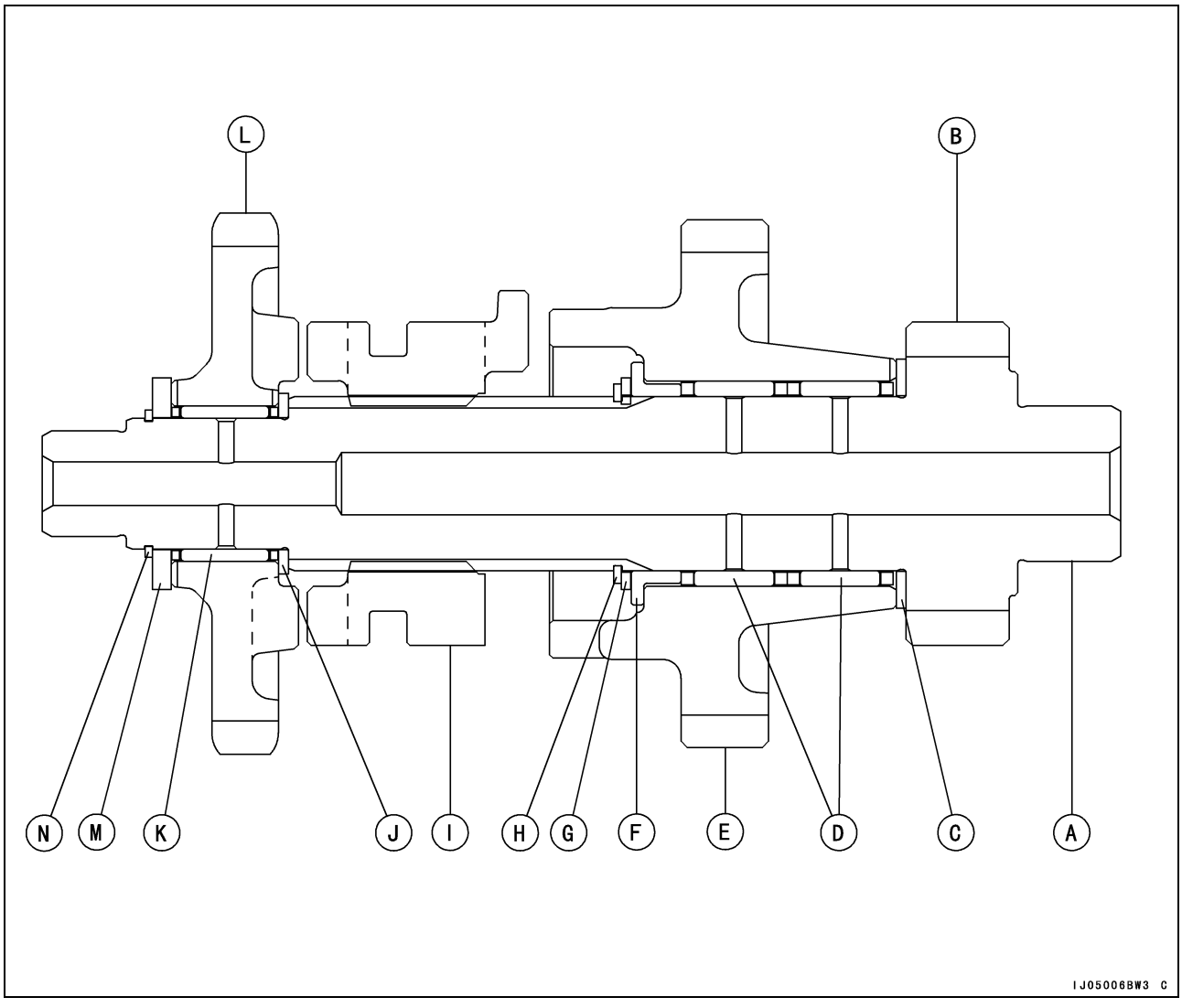

Transmission Case

- Install the following parts on the drive shaft [A].
  Pin [B]
  Governor Drive Gear [C]

○Install the governor drive gear so that the flat side [D] faces to the circlip.

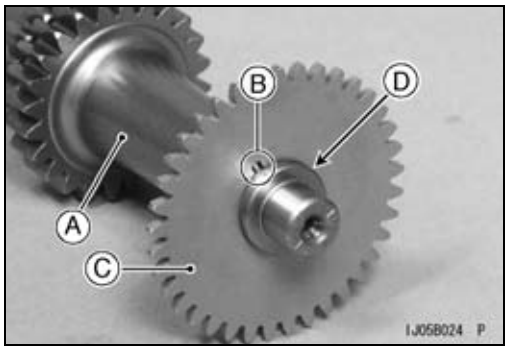

- Install:
  Circlip [A]

Special Tool - Outside Circlip Pliers [B]: 57001-144

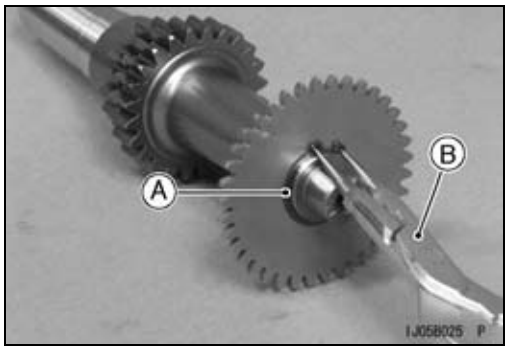

- Install:
  Shift Shaft [A]
  Transmission Shaft [B], Driven Shaft [C], Shift Rod [D] and Reverse Chain [E]

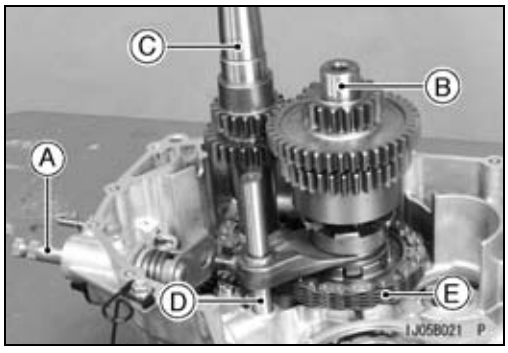

- Insert the pin of the shift fork [A] into the shift shaft [B].
- Install:
  Pin [C]

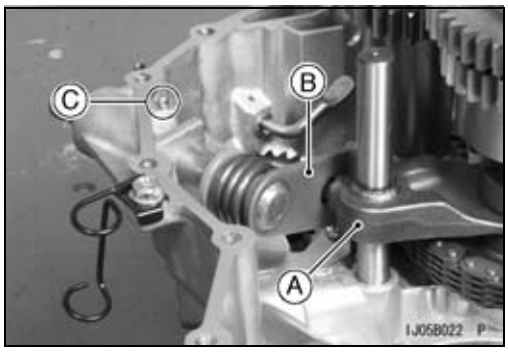

- Install:
  Differential Gear Assembly [A]
  Drive Shaft [B]
- Check to see that the transmission case dowel pins [C] are in place.

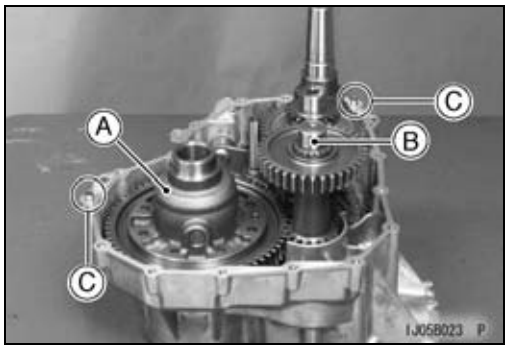

Transmission Case

- Apply liquid Gasket:
  Transmission Case Mating Surface [A]

  Sealant - Liquid Gasket, TB1216B: 92104-1064
- Tighten:

  Torque - Transmission Case Bolts: 8.8 N·m (0.90 kgf·m, 78 in·lb)

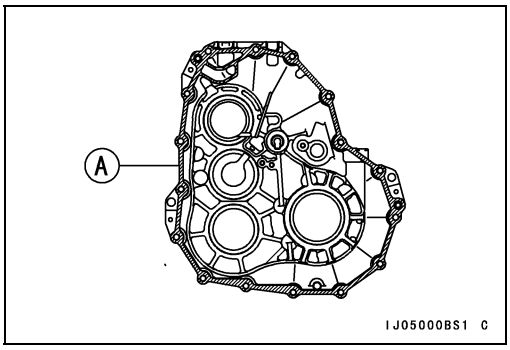

- Install:
  Drive Bevel Gear (KAF400-A/C, see Final Drive chapter)
  Drive Shaft Nut (KAF400-B, see Drive Shaft Nut Installation)

Transmission and Shift Mechanism

Transmission Cable Installation

- Put the shift lever [A] in the “N” (Neutral) position (KAF400 -A/C).

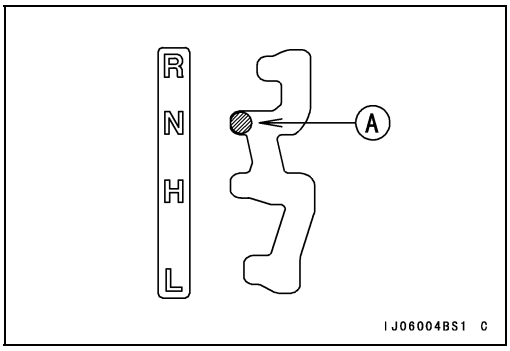

- Put the shift lever [A] in the “N” (Neutral) position (KAF400 -B).

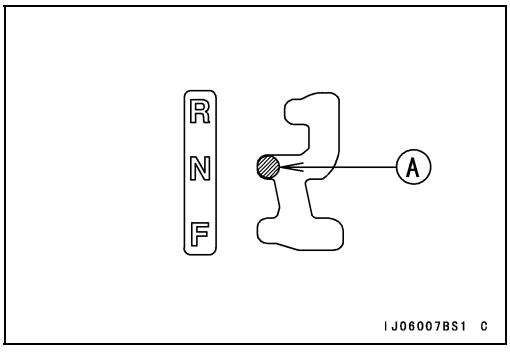

- Set the shift shaft [A] in the neutral position.

○Align the punch mark [B] of the shift shaft with the boss [C] of the transmission case.

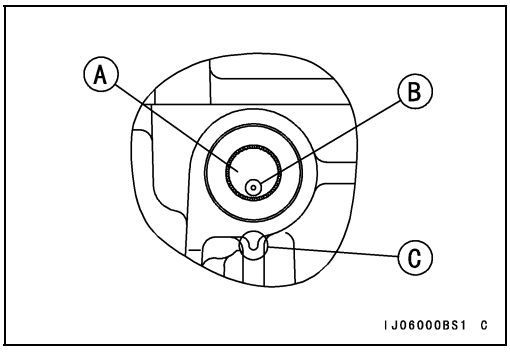

- Screw in the transmission cable end fully to the joint [A] of the shift shaft lever [B].
- Pass the cable through the cable holder [C].

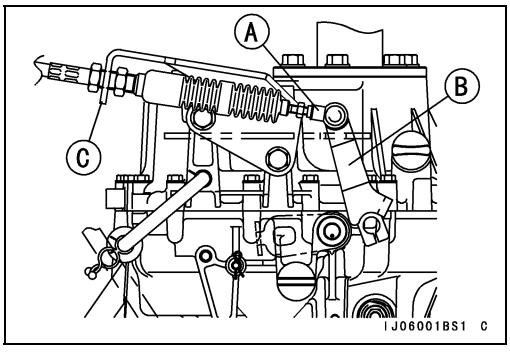

- Install the shift shaft lever [A] so that the slit [B] of the lever aligns with the punch mark [C] of the shift shaft.
- Tighten the shift shaft lever bolt [D].

Torque - Shift Shaft Lever Bolt: 14 N·m (1.4 kgf·m, 10 ft·lb)

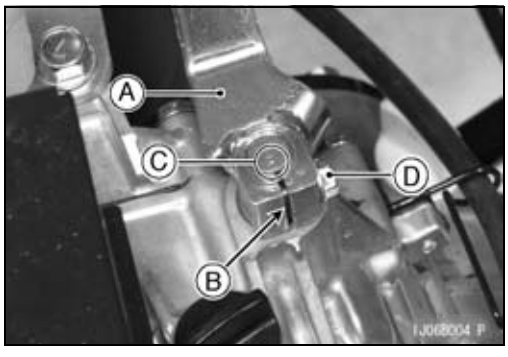

Transmission and Shift Mechanism

- Push the cable [A] lightly rearward [B] to remove the cable free play.
- Tighten the nut [C] by hand and fit the nut to cable holder [D] to remove the cable free play.
- Tighten:
  Nut [E]
  Nut [F]

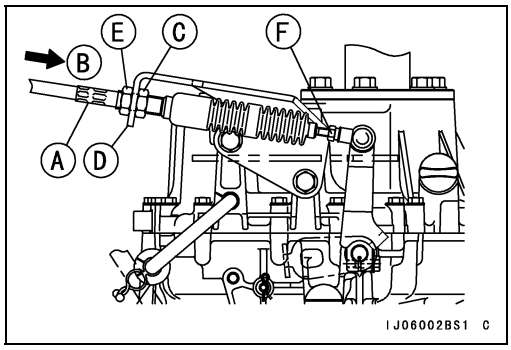

Transmission Shift Cable Inspection

- With the cable disconnected at both ends, the cable should move freely within the cable housing.

★If the cable movement is not free, if the cable is frayed, or if the housing is kinked, replace the cable.

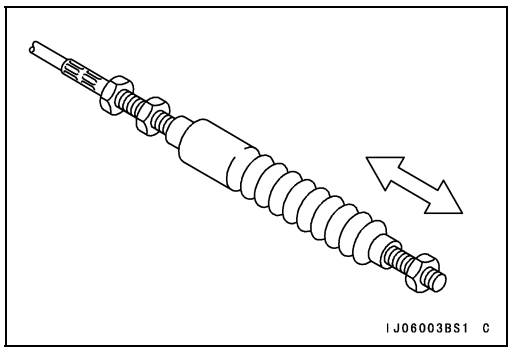

Shift Rod Bending Inspection

- Visually inspect the shift rod [A] and shift fork [B].

★If the fork is bent, replace the shift rod with a new one. A bent fork could cause difficulty in shifting, or allow the transmission to jump out of gear when under power.
[C] 90°

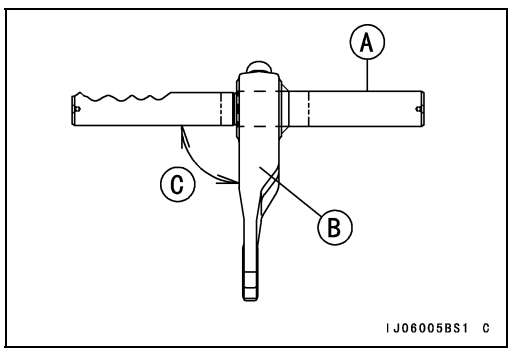

Shift Fork Ear and Shifter Groove Wear Inspection

- Measure the thickness of the shift fork ears [A], and measure the width of the gear groove and shifter.

★If the thickness of a shift fork ear is less than the service limit, the shift rod must be replaced.

Shift Fork Ear Thickness

Standard:	**5.9 ~ 6.0 mm (0.2322 ~ 0.2362 in.)**
Service Limit:	**5.8 mm (0.228 in.)**

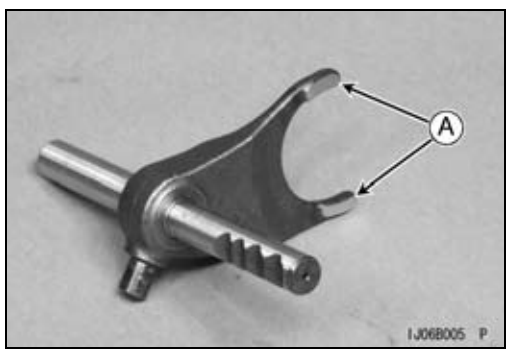

★If the groove is worn over the service limit, the shifter must be replaced.

Shifter Groove Width [A]

Standard:	**6.05 ~ 6.15 mm (0.2382 ~ 0.2421 in.)**
Service Limit:	**6.25 mm (0.2460 in.)**

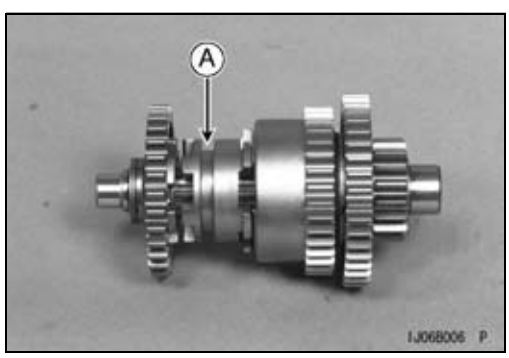

Transmission and Shift Mechanism

Transmission and Shift Mechanism Inspection

- Visually inspect:
  Gears
  Dogs of Gear and Shifter

★If they are damaged or worn excessively, replace them.

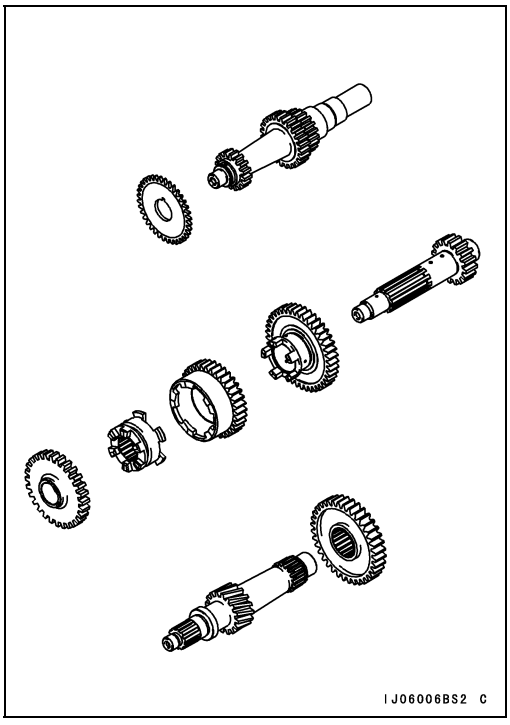

Reverse Chain 20-Link Length [B]

Standard: 190.50 ~ 190.97 mm (7.500 ~ 7.518 in.)

Service Limit: 193.4 mm (7.614 in.)

[A] Force
[C] 1st Pin
[D] 2nd Pin
[E] 21st Pin

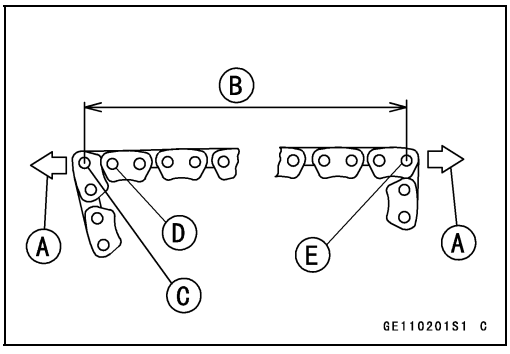

2WD/4WD Shift Mechanism (KAF400-A/C)

2WD/4WD Shift Cable Adjustment

- Put the shift lever [A] in the 2WD position.

- Install the 2WD/4WD shift cable [A] to the shift shaft lever [B] and cable holder [C].

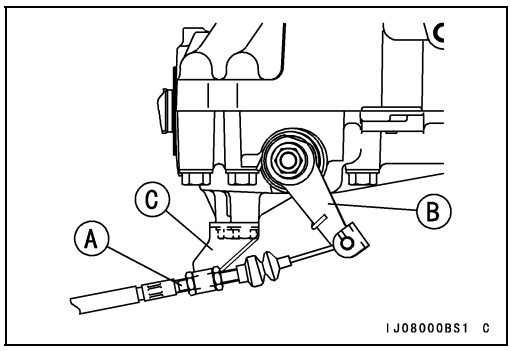

- Put the shift lever [A] in the 4WD position.

- Push the shift shaft lever [A] to the forward (4WD Position), and make the engagement of the shifter maximum while turning the propeller shaft by hand.
- Turn the nut [B] with fingers and pull slightly the inner cable, and tighten the nut [C].
- Put the shift lever in the 2WD position.
- Confirm to return the shift shaft lever to 2WD position.

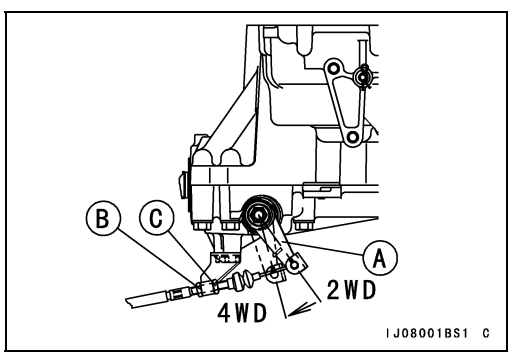

2WD/4WD Shift Cable Lubrication

Whenever the shift cable is removed, lubricate the cable as follows.

- Apply a thin coating of grease to the cable ends.

○The cable may be lubricated by using a pressure cable lubricator with an aesol cable lubricant.

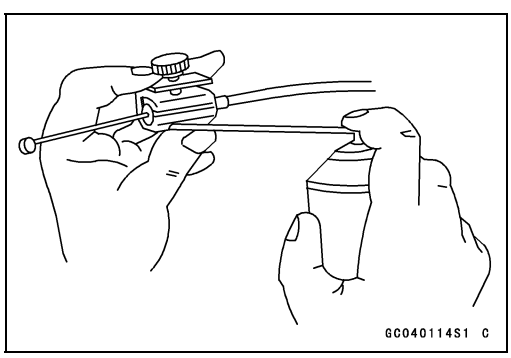

2WD/4WD Shift Mechanism (KAF400-A/C)

2WD/4WD Shift Cable Inspection

- With the cable disconnected at both ends, the cable should move freely [A] within the cable housing.

★If the cable movement is not free, if the cable is frayed, or if the housing is kinked, replace the cable.

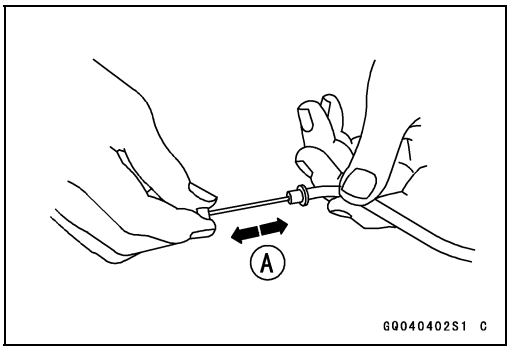

2WD/4WD Shift Mechanism Removal

- Refer to Bevel Gear Case in the Final Drive chapter.

2WD/4WD Shift Mechanism Inspection

- Visually inspect:
  Dogs on Shifter [A]
  Shifter Groove [B]
  Dogs on Driven Bevel Gear [C]
  Shifter Block [D]

★If they are damaged or worn excessively, replace them.

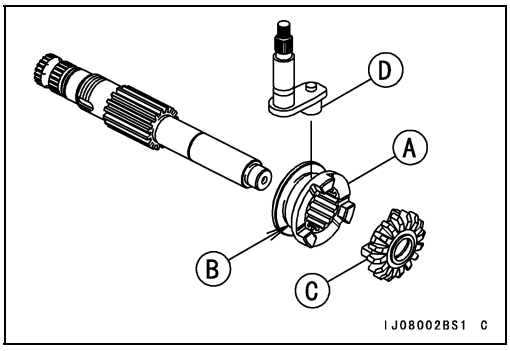

Shifter Block Outside Diameter

Standard:	**13.95 ~ 14.00 mm (0.549 ~ 0.551 in.)**
Service Limit:	**13.8 mm (0.543 in.)**

Shifter Groove Width

Standard:	**14.0 ~ 14.2 mm (0.551 ~ 0.559 in.)**
Service Limit:	**14.3 mm (0.563 in.)**

Differential Gears and Shift Mechanism

Differential Shift Cable Adjustment

- Put the shift lever [A] in the UN-LOCK position.

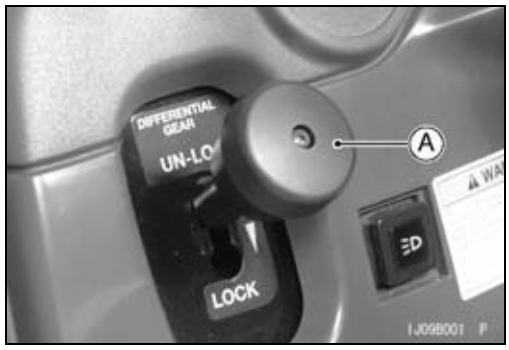

- Install the differential shift cable [A] to the shift shaft lever [B] and cable holder [C].

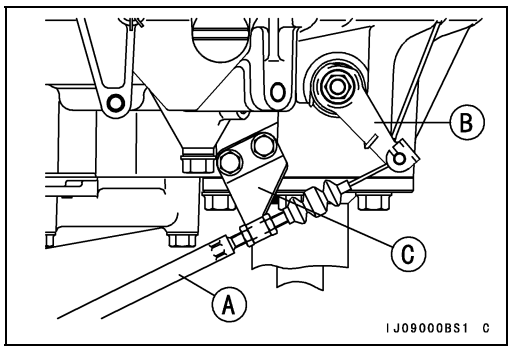

- Put the shift lever [A] in the LOCK position.

- Push the shift shaft lever [A] to the forward (LOCK position), and make the engagement of the shifter maximum while turning the drive shaft [B] by hand.
- Turn the nut [C] with fingers and pull slightly the inner cable, and tighten the nut [D].
- Put the shift lever in the UN-LOCK position.
- Confirm to return the shift shaft lever to UN-LOCK position.

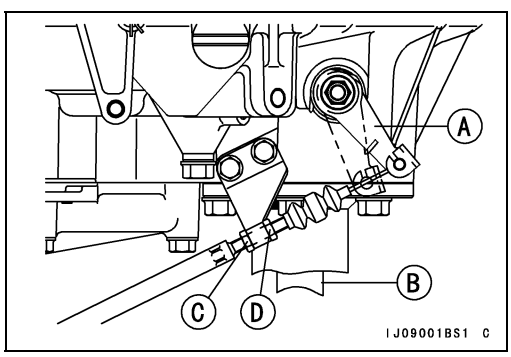

Differential Shift Cable Lubrication

Whenever the shift cable is removed, lubricate the cable as follows.

- Apply a thin coating of grease to the cable ends.

○The cable may be lubricated by using a pressure cable lubricator with an aesol cable lubricant.

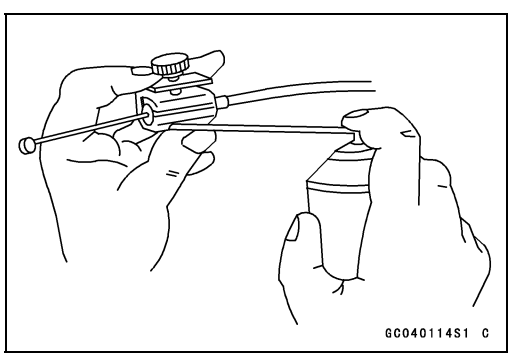

Differential Gears and Shift Mechanism

Differential Shift Cable Inspection

- With the cable disconnected at both ends, the cable should move freely [A] within the cable housing.

★If the cable movement is not free, if the cable is frayed, or if the housing is kinked, replace the cable.

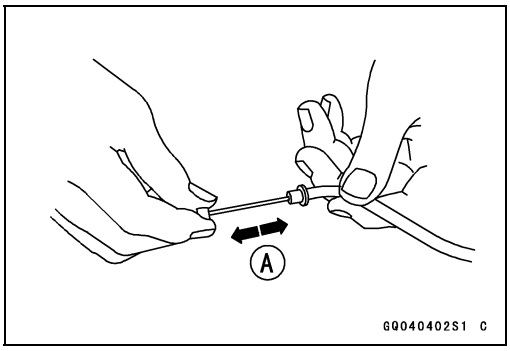

Differential Shift Mechanism Removal

- Remove:
  Transmission Case (splitting, see Transmission Case Disassembly)
  Differential Gear [A]

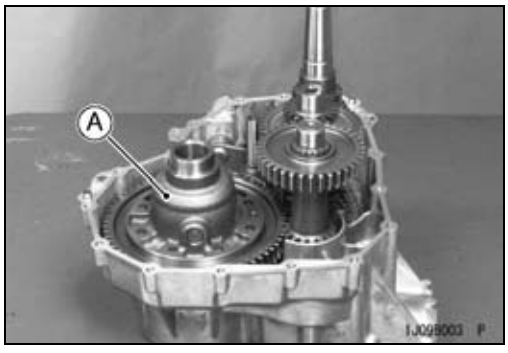

- Remove:
  Shift Shaft Stop Bolt [A]
  Differential Shift Shaft Nut [B]
  Differentia Shift Shaft Lever [C] and Spring [D]

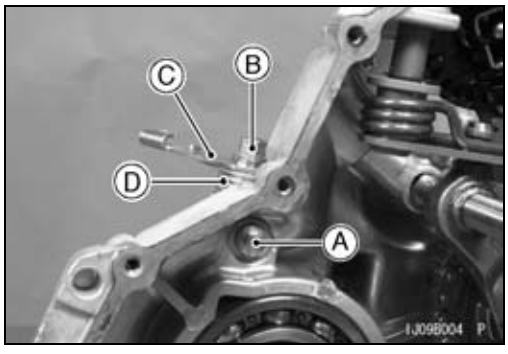

- Pull up the differential shift shaft [A].
- Remove:
  Shifter [B]

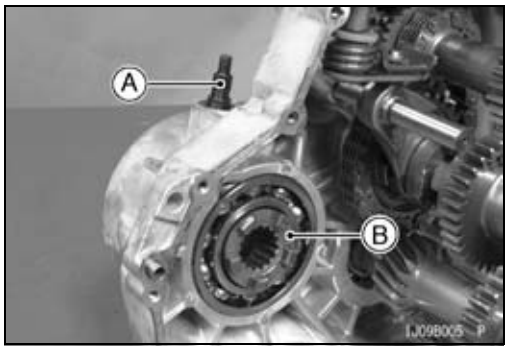

- Remove:
  Differential Shift Shaft [A]

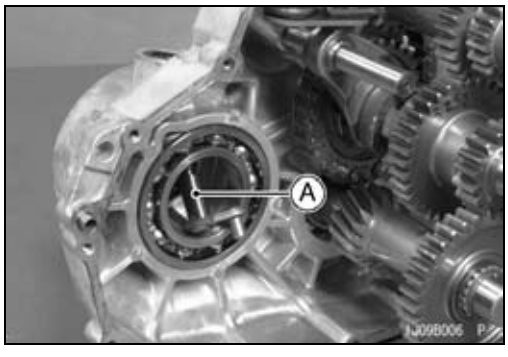

Differential Gears and Shift Mechanism

Differential Shift Mechanism Installation

- Install:
  Differential Shift Shaft [A]
  Shifter [B]
  Shift Shaft Stop Bolt [C]
- Tighten:

Torque - Shift Shaft Stop Bolt: 8.8 N·m (0.90 kgf·m, 78 in·lb)

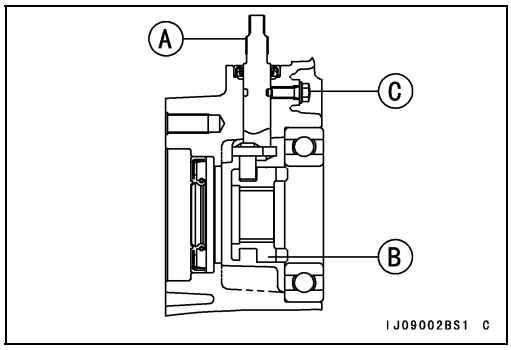

- Align the mark [A] on the shaft with the mark [B] on the lever as shown.
- Tighten:

Torque - Differential Shift Shaft Nut: 20 N·m (2.0 kgf·m, 14 ft·lb)

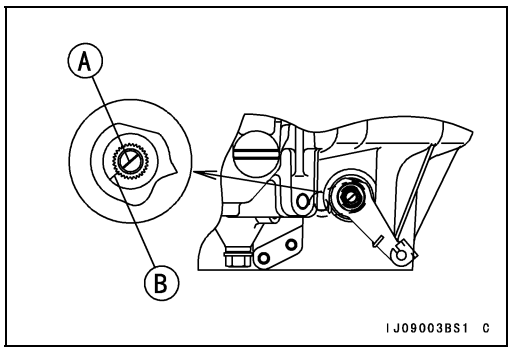

Differential Shift Mechanism Inspection

- Visually inspect:
  Splines on Drive Shaft [A]
  Splines on Shifter [B]
  Dogs on Shifter
  Shifter Groove
  Shift Shaft Pin [C]
  Dogs on Differential Gear Housing [D]

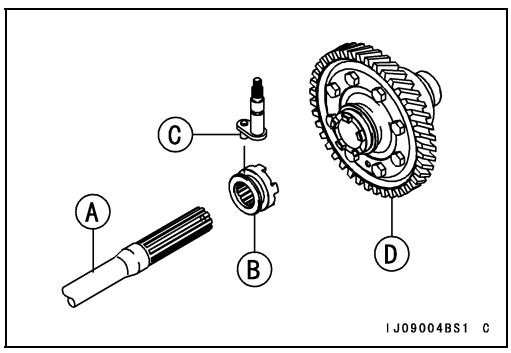

★If they are damaged or worn excessively, replace them.

Shift Shaft Pin Diameter [A]
Standard: 8.4 ~ 8.6 mm (0.331 ~ 0.339 in.)
Service Limit: 8.3 mm (0.327 in.)

Shifter Groove Width [B]
Standard: 9.0 ~ 9.1 mm (0.354 ~ 0.358 in.)
Service Limit: 9.2 mm (0.362 in.)

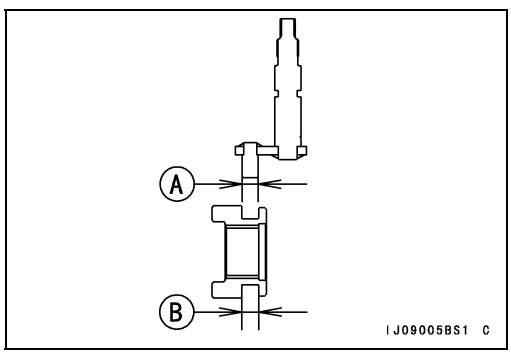

Differential Gear Removal

- Remove:
  Transmission Case (split, see Transmission Case Disassembly)
  Differential Gear Assembly [A]

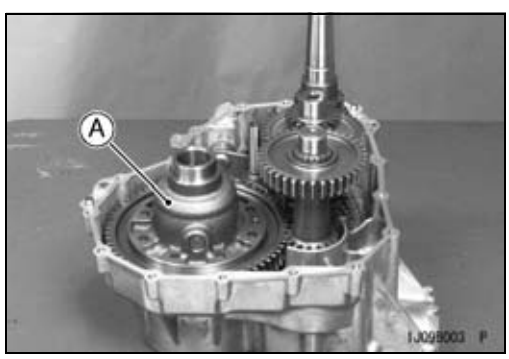

Differential Gears and Shift Mechanism

- Remove:
  Differential Gear Housing Bolts [A]
  Final Gear [B]

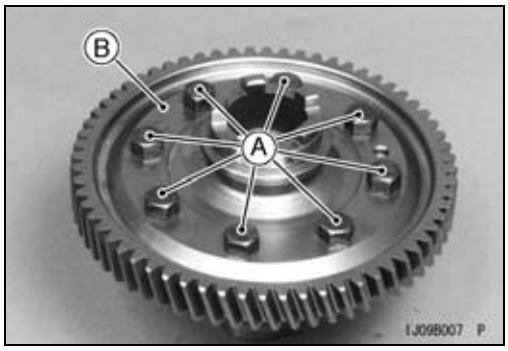

- Remove:
  Housing [A]
  Knock Pin [B]
  Side Gear [C]
  Spacer [D]

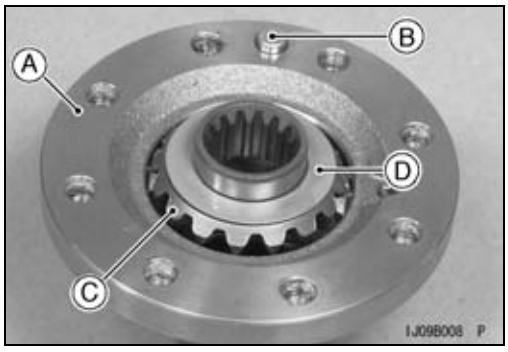

- Remove:
  Retaining Pin [A]
  Pinion Gear Shaft [B]
  Pinion Gears [C]

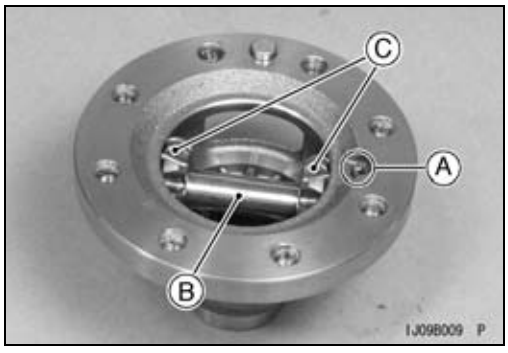

- Remove:
  Side Gear [A]

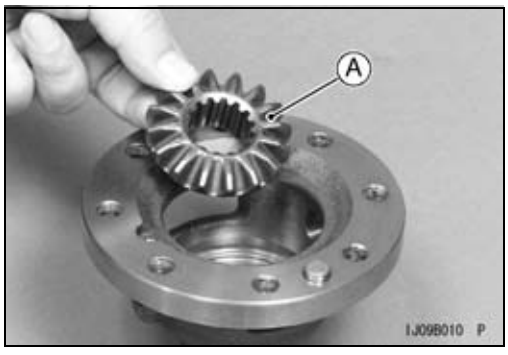

Differential Gear Installation

- Apply molybdenum disulfide oil:
  Side Gears
  Pinion Gears
- Apply a non-permanent locking agent:
  Differential Gear Housing Bolts
- Tighten:

Torque - Differential Gear Housing Bolts: 57 N·m (5.8 kgf·m, 42 ft·lb)

Differential Gears and Shift Mechanism

Differential Gear Inspection

● Visually inspect the differential gears.

★Replace the gears as a set if either gear is damaged.

Bearings and Oil Seal

Bearing Replacement

- Using a press, a puller, the oil seal & bearing remover, or the bearing driver set, remove the bearings.

Special Tools - Oil Seal & Bearing Remover: 57001-1058
Bearing Driver Set: 57001-1129

- Using a press and the bearing driver set, install the new bearings and/or new oil seals.

Special Tool - Bearing Driver Set: 57001-1129

Ball Bearing Inspection

- Examine the bearing seal [B] for tears or leakage.

★If the seal is torn or is leaking, replace the bearing.

- Turn [A] each bearing back and forth while checking for roughness or binding.

★If roughness or binding is found, replace the bearing.

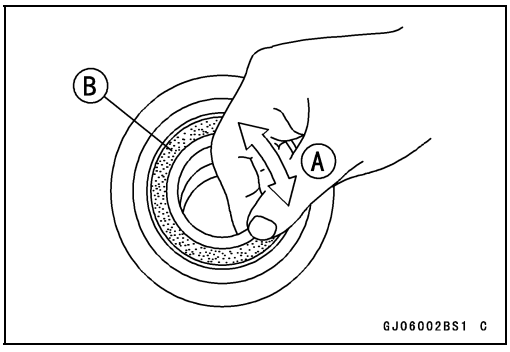

Needle Bearing Inspection

- Check the needle bearing.

○The rollers in a needle bearing normally wear very little, and wear is difficult to measure. Instead of measuring, inspect the bearing for abrasion, color change, or other damage.

★If there is any doubt as to the condition of a needle bearing, replace it.

Oil Seal Inspection

- Visually inspect the oil seal.

★Replace it if the lips are misshapen, discolored (indicating that the rubber has deteriorated), hardened, or been otherwise damaged.

Transmission Sectional Figure

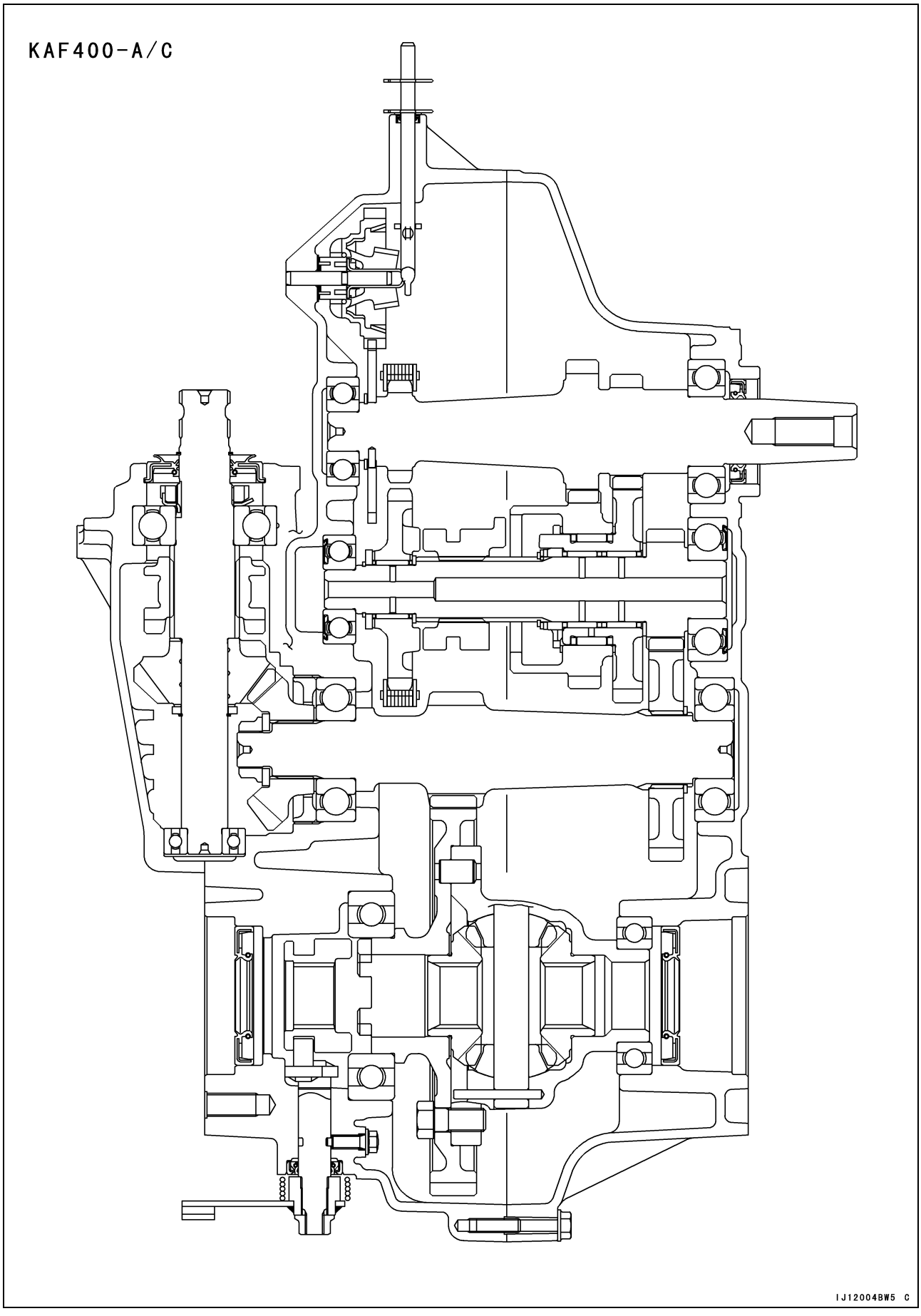

Transmission Sectional Figure

KAF400-A/C
(except Europe Model)

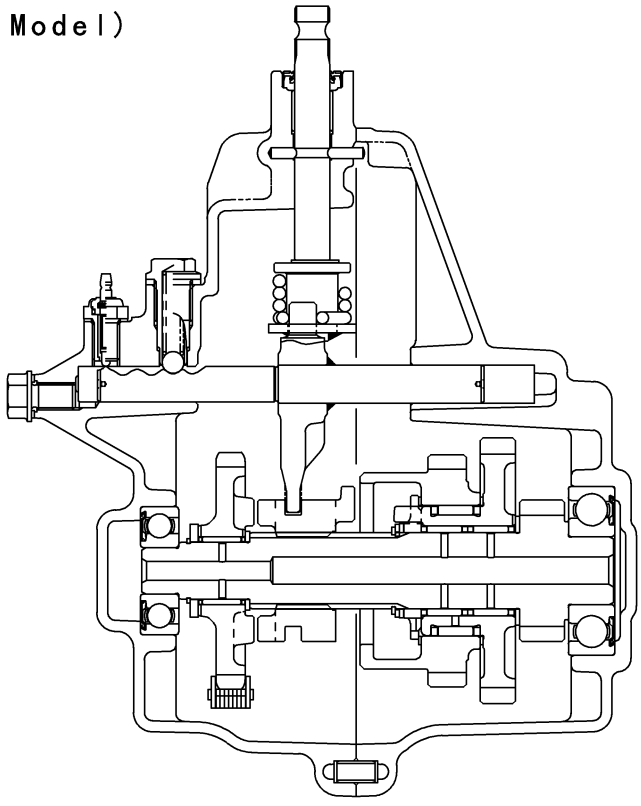

KAF400-A/C
(Europe Model)

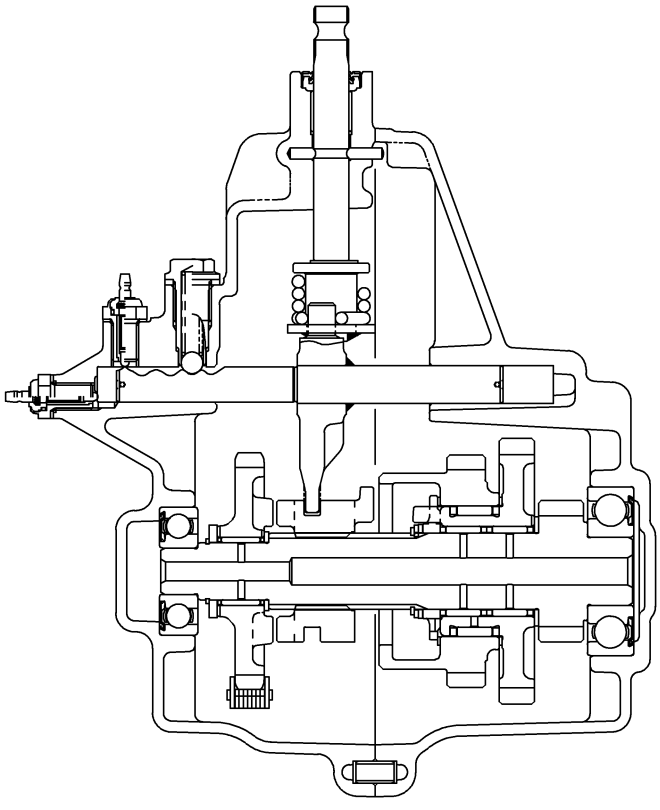

IJ12005BW5 C

Transmission Sectional Figure

KAF400-B

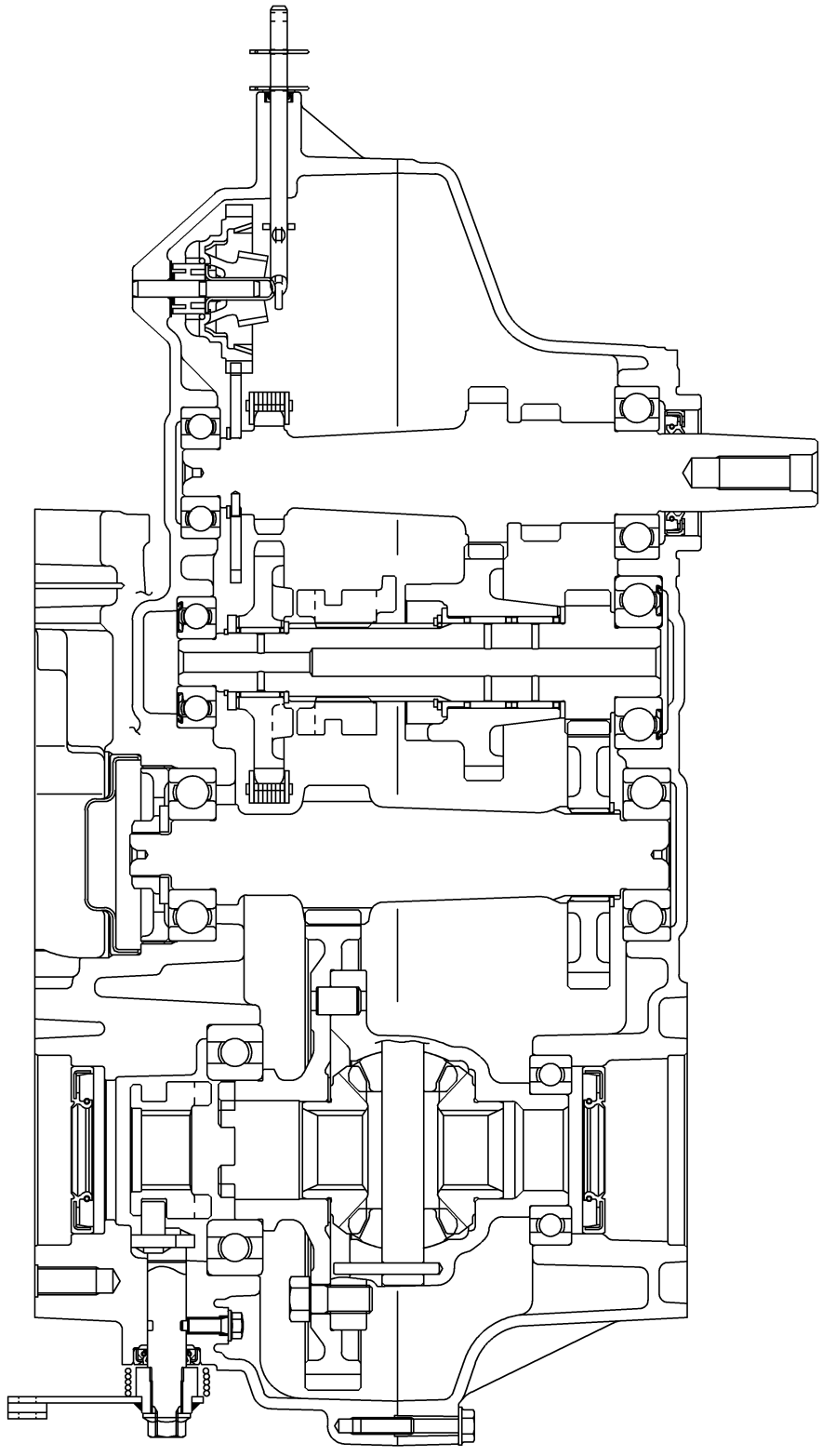

IJ12006BW5 C

Transmission Sectional Figure

KAF400-B
(except Europe Model)

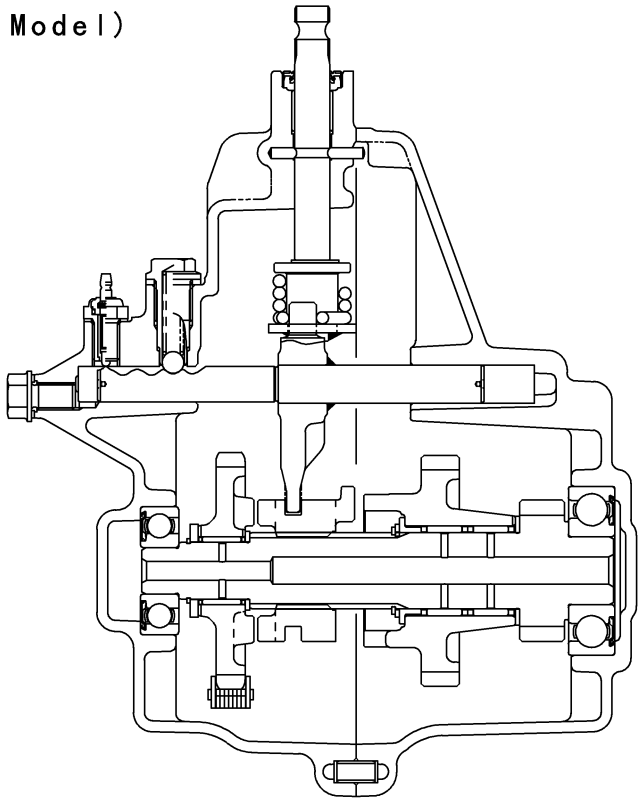

KAF400-B
(Europe Model)

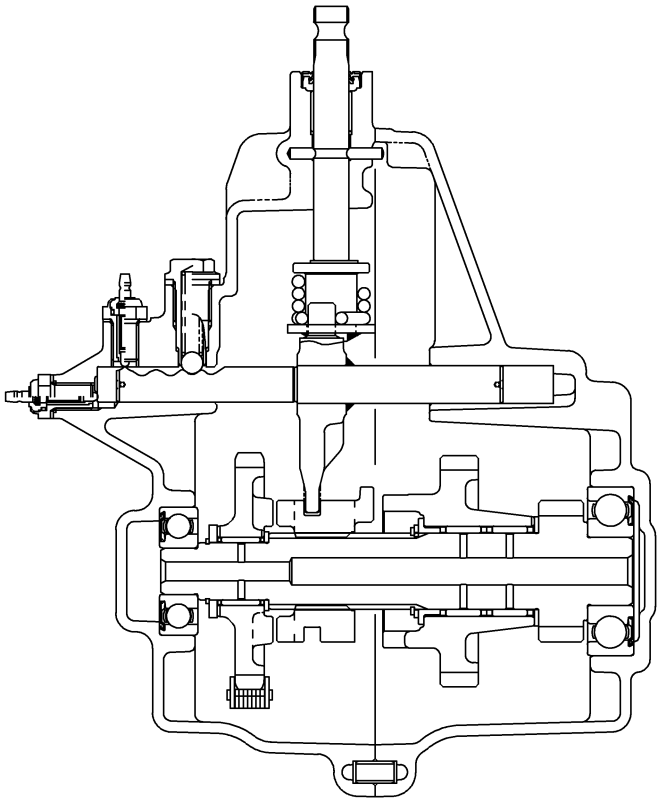

IJ12007BW5 C

Wheels/Tires

Table of Contents

Exploded View 10-2
Specifications 10-4
Special Tool 10-5
Wheel Alignment 10-6
    Toe-in Adjustment 10-6
Wheels (Rims) 10-7
    Wheel Removal 10-7
    Wheel Installation 10-7
    Wheel (Rim) Inspection 10-7
    Wheel (Rim) Replacement 10-8
Tires 10-9
    Tire Removal 10-9
    Tire Installation 10-9
    Tire Wear Inspection 10-10

Exploded View

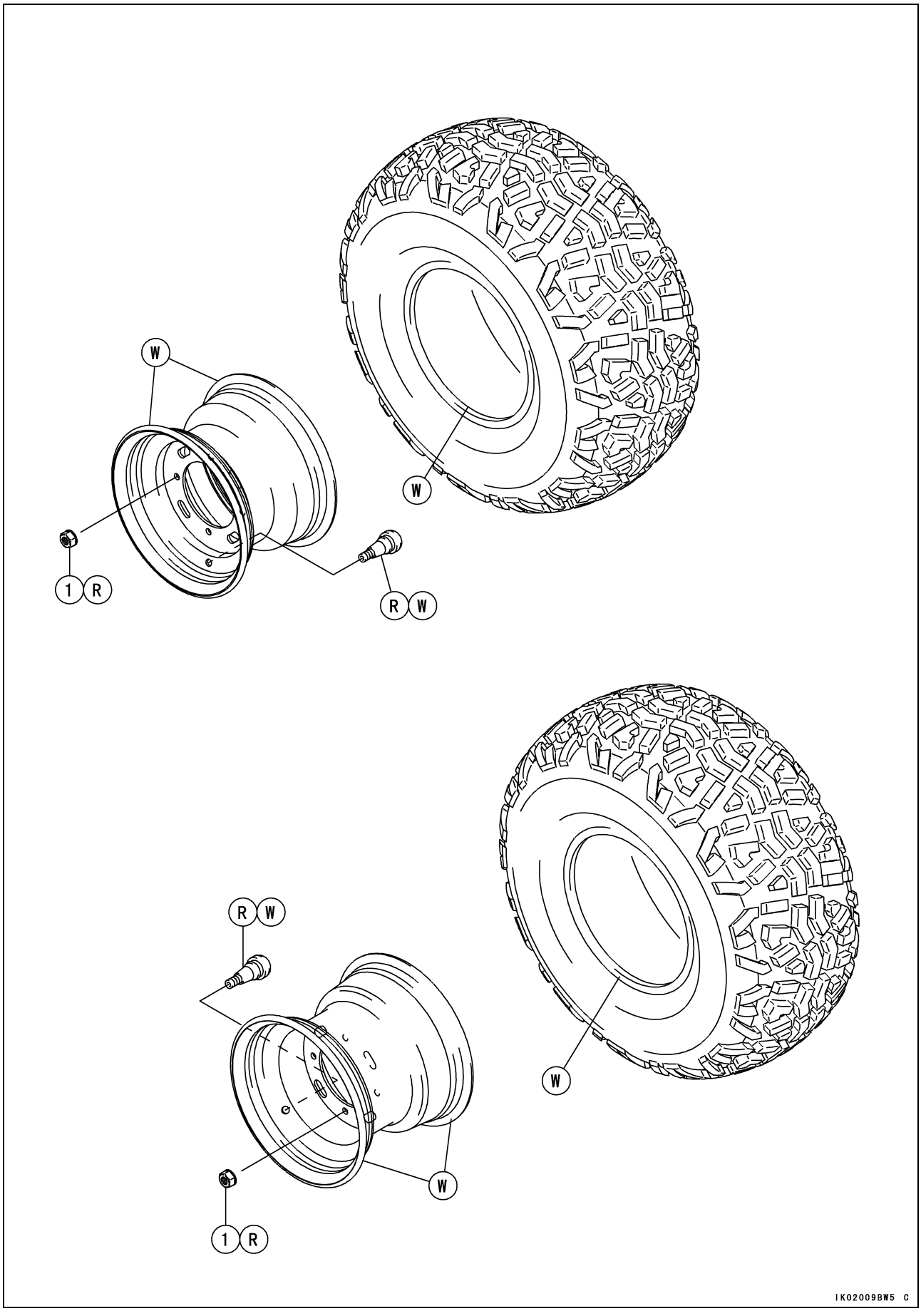

Exploded View

No.	Fastener	Torque			Remarks
		N·m	kgf·m	ft·lb	
1	Wheel Nuts	34	3.5	25	R

R: Replacement Parts
W: Apply a soap and water solution, or water.

Specifications

Item	Standard	Service Limit
Wheel Alignment		
Toe-in	0 ~ 20 mm (0 ~ 0.79 in.) @1G	– – –
Tie-rod Length (Distance Between Flange End and Locknut)	about 30 mm (1.18 in.)	– – –
Tires (Rims)		
Standard Tire:		
KAF400-A/C		
Front	24 × 9.00-10 DUNLOP KT869M, Tubeless DURO DI-K968M, Tubless	– – –
Rear	24 × 11.00-10 DUNLOP KT869, Tubeless DURO DI-K968, Tubeless	– – –
KAF400-B		
Front	22 × 9.00-10 DUNLOP KT901, Tubeless DURO DI-K109, Tubeless	– – –
Rear	22 × 11.00-10 DUNLOP KT869, Tubeless DURO DI-K968, Tubeless	– – –
Rim Size:		
Front	10 × 7.0	
Rear	10 × 8.5	
Tire Air Pressure (when cold):		
Front	47 kPa (0.47 kgf/cm², 7 psi)	– – –
Rear		
KAF400-A/C	97 kPa (0.97 kgf/cm², 14 psi)	– – –
KAF400-B	110 kPa (1.1 kgf/cm², 16 psi)	– – –
Maximum Tire Air Pressure (to seat beads, when cold)	250 kPa (2.5 kgf/cm², 36 psi)	– – –
Tire Tread Depth	– – –	3 mm (0.12 in.)

Special Tool

Jack:
57001-1238

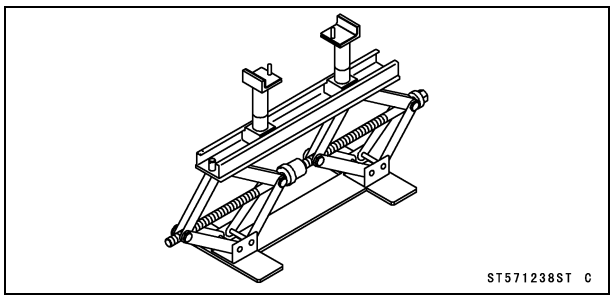

Wheel Alignment

Toe-in is the amount that the front wheels are closer together in front than at the rear at the axle height. When there is toe-in, the distance **A** (Rear) is greater than **B** (Front) as shown. The purpose of toe-in is to prevent the front wheels from getting out of parallel at any time, and to prevent any slipping or scuffing action between the tires and the ground. If toe-in is incorrect, the front wheels will be dragged along the ground, scuffing and wearing the tread knobs.

Caster and camber are built-in and require no adjustment.

A (Rear) – B (Front) = Amount of Toe-in
(Distance A and B are measured at hub height)

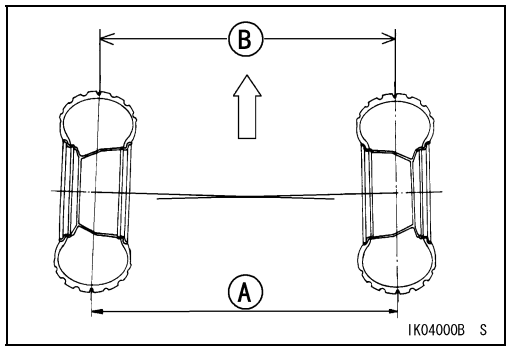

Toe-in Adjustment

- Lift the front wheels off the ground.
- Apply a heavy coat of chalk near the center of the front tires.
- Using a needle nose scriber, make a thin mark near the center of the chalk coating while turning the wheel.
- Set the wheels so that the marks on the tires are at the front side and at the level of the axle height.
- Ground the front wheels.
- Set the steering wheel straight ahead.
- At the level of the axle height, measure the distance between the scribed lines with a measure.

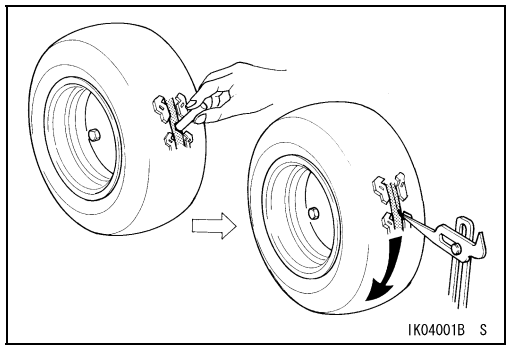

- Move the vehicle rearward until the marks on the front tires are at the rear side and at the same level as the axle.
- Measure the distance [A] between the scribed lines.
- Subtract the measurement of the front from the measurement of the rear to get the toe-in.

Toe-in of Front Wheels
Standard: 0 ~ 20 mm (0 ~ 0.79 in.) @1G

★If the toe-in is not the specified value, perform the following procedure.

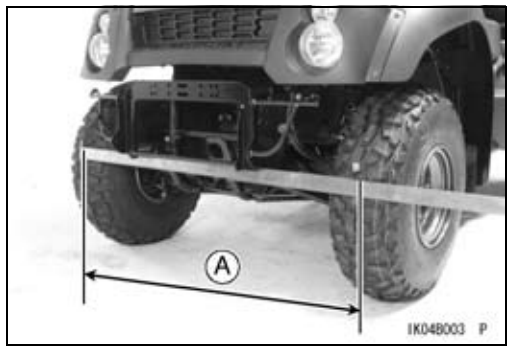

- Check the length [A] of the tie-rod distance between the flange end [B] and the locknut [C].

Tie-rod Length (distance between flange end and locknut)
Standard: about 30 mm (1.18 in.)

★If the length is out of the specified, adjust the tie-rod length.

- Loosen the locknut and turn the adjusting rod [D] to achieve the specified value.

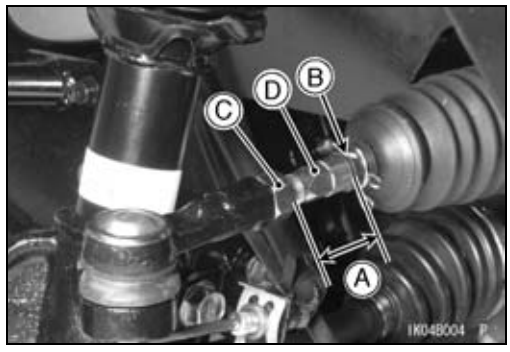

NOTE

○*The toe-in will be near the specified range, if the tie-rod length is the specified value on the left and right.*

- Tighten:

Torque - Tie-rod Locknuts: 44 N·m (4.5 kgf·m, 32 ft·lb)

- Check the toe-in again.
- Test drive the vehicle.

Wheels (Rims)

Wheel Removal

- Loosen the wheel nuts [A] (Do not remove).
- Support the vehicle on a stand or a jack so that the wheels are off the ground.

  Special Tool - Jack: 57001-1238

- Remove:
  Wheel Nuts
  Wheel(s)

Wheel Installation

- Check the tire rotation mark [A] on the tire, and install the wheel accordingly.

NOTE

○*The direction of the tire rotation [B] is shown by an arrow on the tire sidewall.*

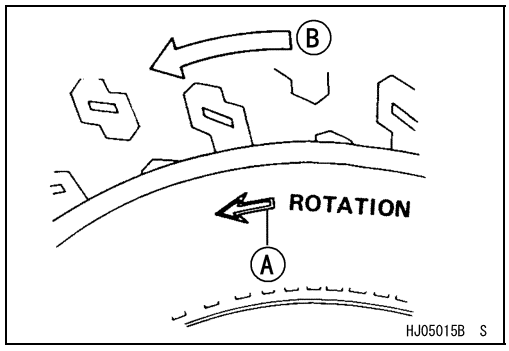

- Position the wheel so that the valve stem [A] is toward the outside of the vehicle.
- Replace the wheel nuts with new ones.
- Tighten:

  Torque - Wheel Nuts: 34 N·m (3.5 kgf·m, 25 ft·lb)

○Tighten the wheel nuts in a criss-cross pattern.

Wheel (Rim) Inspection

- Examine both sides of the rim for dents [A].

★If the rim is dented, replace it.

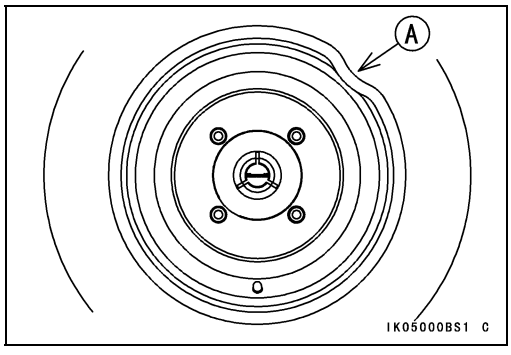

★If the tire is removed, inspect the air sealing surfaces [A] of the rim for scratches or nicks. Smooth the sealing surfaces with fine emery cloth if necessary.

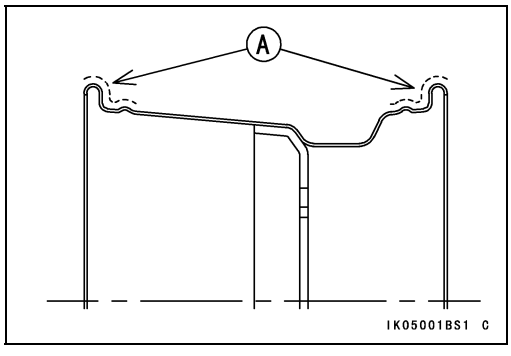

Wheels (Rims)

Wheel (Rim) Replacement

- Remove the wheel (see Wheel Removal).
- Remove the tire from the rim.
- Remove the air valve and discard it.

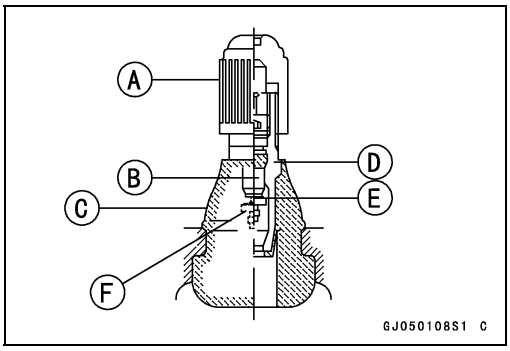

NOTICE
Replace the air valve whenever the tire is replaced. Do not reuse the air valve.

Plastic Cap [A]
Valve Core [B]
Stem Seal [C]
Valve Stem [D]
Valve Seat [E]
Valve Opened [F]

- Install a new air valve in the new rim.

○Remove the valve cap, lubricate the stem with a soap and water solution, and pull the stem [A] through the rim from the inside out until it snaps into place.

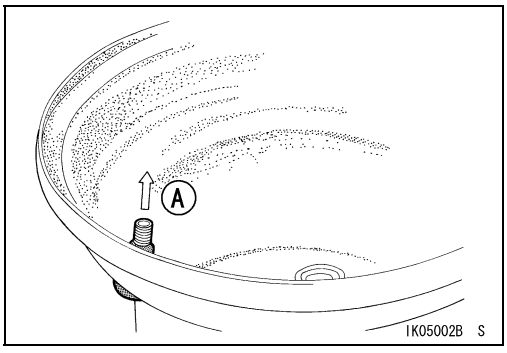

NOTICE
Do not use engine oil or petroleum distillates to lubricate the stem because they will deteriorate the rubber.

- Mount the tire on the new rim.
- Install the wheel (see Wheel Installation).

Tires

Tire Removal

- Remove:
  Wheel (see Wheel Removal)
  Valve Core (let out the air)
- Lubricate the tire beads and rim flanges on both sides of the wheel with a soap and water solution, or water [A]. This helps the tire beads slip off the rim flanges.

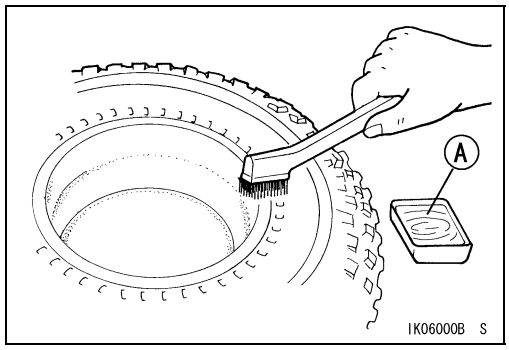

NOTICE

Do not lubricate the tire beads and rim flanges with engine oil or petroleum distillates because they will deteriorate the tire.

- Remove the tire from the rim using a suitable commercially available tire changer.

NOTE

○*The tires cannot be removed with hand tools because they fit the rims tightly.*

Tire Installation

- Inspect the rim.
- Check the tire for wear and damage.
- Replace the air valve with a new one.

NOTICE

Replace the air valve whenever the tire is replaced. Do not reuse the air valve.

- Lubricate the tire beads and rim flanges with a soap and water solution, or water.

⚠ WARNING

Do not use any lubricant other than a water and soap solution, or water to lubricate the tire beads and rim because it may cause tire separation, and a hazardous condition may result.

- Install the tire on the rim using a suitable commercially available tire changer.
- Lubricate the tire beads again and center the tire on the rim.

- Support the wheel rim [A] on a suitable stand [B] to prevent the tire from slipping off.
- Inflate the tire until the tire beads seat on the rim.

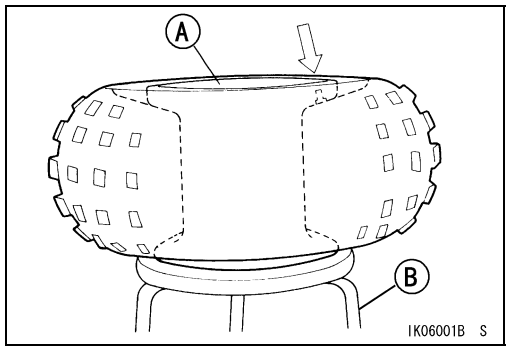

Maximum Tire Air Pressure (to seat beads when cold)
Front and Rear: 250 kPa (2.5 kgf/cm², 36 psi)

⚠ WARNING

Overinflating a tire can cause it to explode, causing serious injury or death. Be sure to install the valve core whenever inflating the tire, and do not inflate the tire to more than maximum pressure.

Tires

- Check to see that the bead lines [A] on both sides of the tire are parallel with the rim flanges [B].

★If the bead lines and the rim flanges are not parallel, deflate the tire, lubricate the sealing surfaces again, and reinflate the tire.

- After the beads are properly seated, check for air leaks.

○Apply a soap and water solution around the tire bead and check for bubbles.

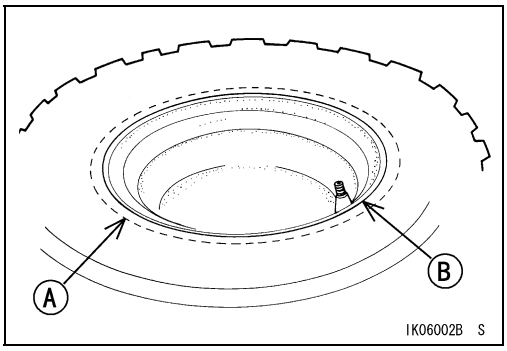

- Check the tire pressure using an air pressure gauge [A].

NOTE

○*Kawasaki provides the air pressure gauge (P/N 52005 -1031) as the owner's tool.*

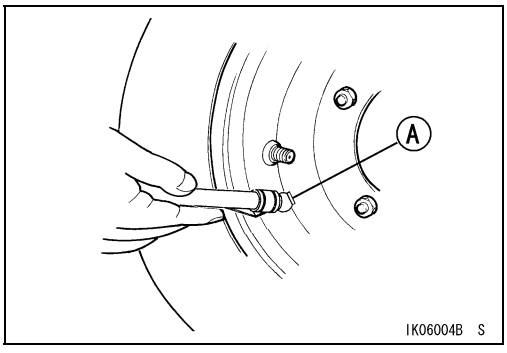

Tire Air Pressure (when cold)

Front 47 kPa (0.47 kgf/cm², 7 psi)

Rear:

(KAF400-A/C) 97 kPa (0.97 kgf/cm², 14 psi)

(KAF400-B) 110 kPa (1.1 kgf/cm², 16 psi)

- Install the wheel (see Wheel Installation).
- Wipe off the soap and water solution, or water on the tire, and dry the tire before operation.

⚠ WARNING

Water or soap solution on the tire bead can cause tire separation and an accident resulting in serious injury or death. Do not operate the vehicle until any water or soap solution applied to the bead has completely dried.

⚠ WARNING

Operating with unequally or improperly pressurized tires can adversely affect steering or handling. Inflate both front tires to the same pressure and both rear tires to the same pressure.

Tire Wear Inspection

- Refer to the Wheels/Tires in the Periodic Maintenance chapter.

Final Drive

Table of Contents

Exploded View (KAF400-A/C) 11-2
Exploded View (KAF400-B)..... 11-6
Specifications 11-8
Special Tools and Sealants 11-9
Front Final Gear Case (KAF400-A/C) 11-11
Front Final Gear Case Oil Level Inspection 11-11
Front Final Gear Case Oil Change..... 11-11
Front Final Gear Case Removal .. 11-11
Front Final Gear Case Installation 11-12
Front Final Gear Case Disassembly..... 11-12
Front Final Gear Case Assembly. 11-13
Differential Unit Disassembly 11-15
Differential Unit Assembly..... 11-17
LSD Clutch Torque Inspection 11-18
LSD Clutch Plate Inspection 11-18
Pinion Gear Unit Disassembly 11-19
Pinion Gear Unit Assembly..... 11-19
Front Final Bevel Gear Adjustment 11-20
Bevel Gear Inspection..... 11-26
Differential Gear Inspection 11-26
Ball Bearing Inspection 11-26
Oil Seal Inspection..... 11-26
Bevel Gear Case (KAF400-A/C)..... 11-27
Driven Bevel Gear Removal 11-27
Driven Bevel Gear Installation 11-27
Driven Bevel Gear Disassembly .. 11-28
Driven Bevel Gear Assembly..... 11-29
Drive Bevel Gear Removal 11-31
Drive Bevel Gear Installation 11-31
Bevel Gear Adjustment 11-31
Bevel Gear Inspection..... 11-34
Ball Bearing/Oil Seal Inspection... 11-34
Propeller Shafts (KAF400-A/C) 11-35
Front Propeller Shaft Removal..... 11-35
Front Propeller Shaft Installation.. 11-35
Rear Propeller Shaft Removal 11-37
Rear Propeller Shaft Installation .. 11-38
Propeller Shaft Inspection..... 11-39
Axles..... 11-40
Front Axle Removal (KAF400-A/C)..... 11-40
Front Axle Installation (KAF400-A/C)..... 11-40
Front Axle Removal (KAF400-B) . 11-40
Front Axle Installation (KAF400-B) 11-40
Rear Axle Removal..... 11-41
Rear Axle Installation..... 11-41
Axle Inspection..... 11-41
Dust Boot Inspection (KAF400-A/C)..... 11-41
Front Axle Joint Boot Replacement (KAF400-A/C) 11-42
Ball Bearing Inspection 11-47
Grease Seal Inspection..... 11-48

Exploded View (KAF400-A/C)

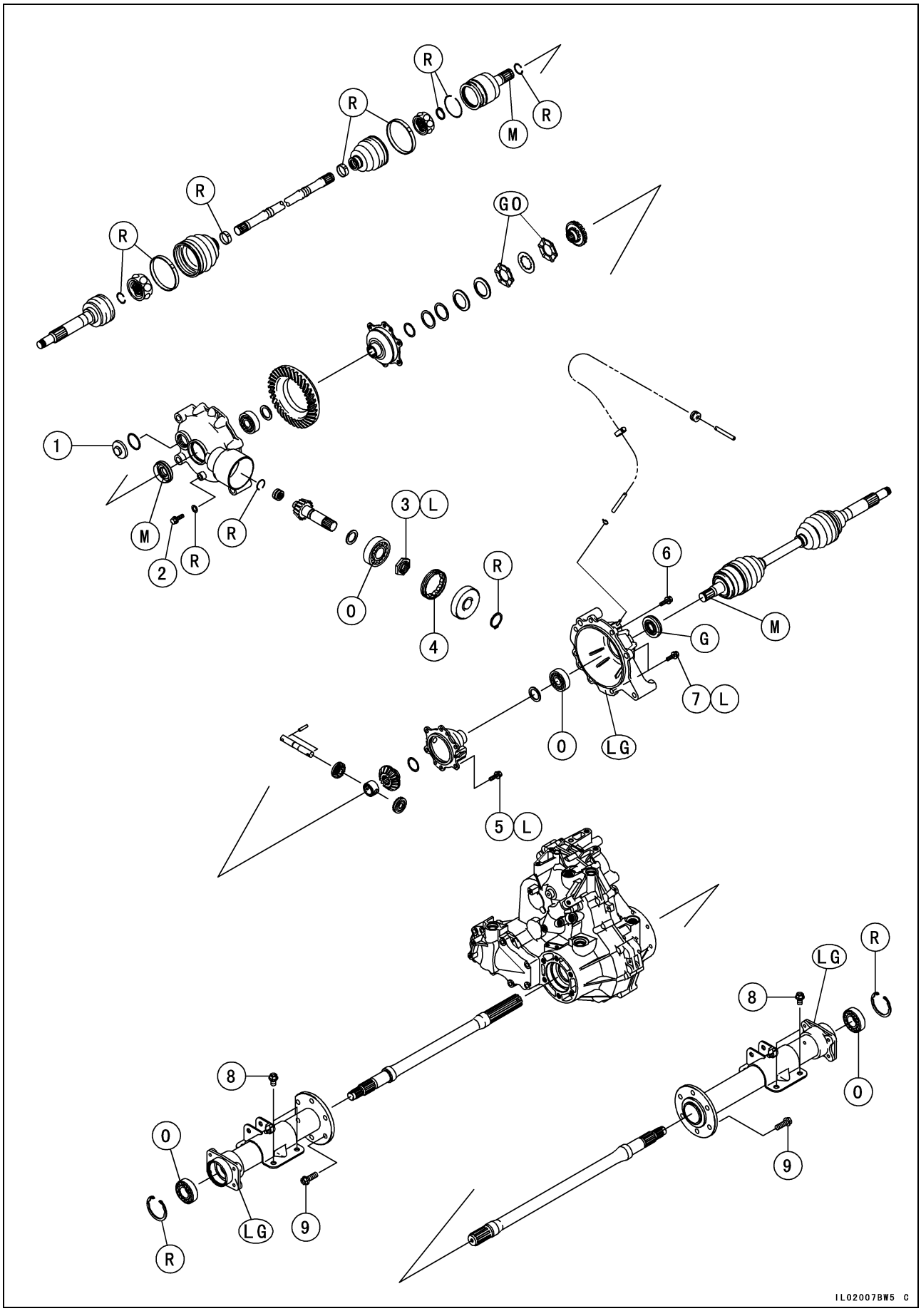

Exploded View (KAF400-A/C)

No.	Fastener	Torque			Remarks
		N·m	kgf·m	ft·lb	
1	Front Final Gear Case Oil Filler Cap	29	3.0	22	
2	Front Final Gear Case Oil Drain Plug	20	2.0	14	
3	Pinion Gear Nut	156	16	115	L
4	Pinion Gear Bearing Holder	98	10	72	
5	Differential Gear Housing Bolts	49	5.0	36	L
6	Ring Gear Cover Bolts M8	25	2.5	18	
7	Ring Gear Cover Bolts M10	47	4.8	35	L
8	Rear Axle Bracket Bolts	40	4.1	30	
9	Rear Axle Bracket Flange Bolts	49	5.0	36	

G: Apply grease.
GO: Apply gear oil for LSD.
L: Apply a non-permanent locking agent.
LG: Apply liquid gasket (ThreeBond 1215 Gray).
M: Apply molybdenum disulfide grease.
O: Apply oil.
R: Replacement Parts

Exploded View (KAF400-A/C)

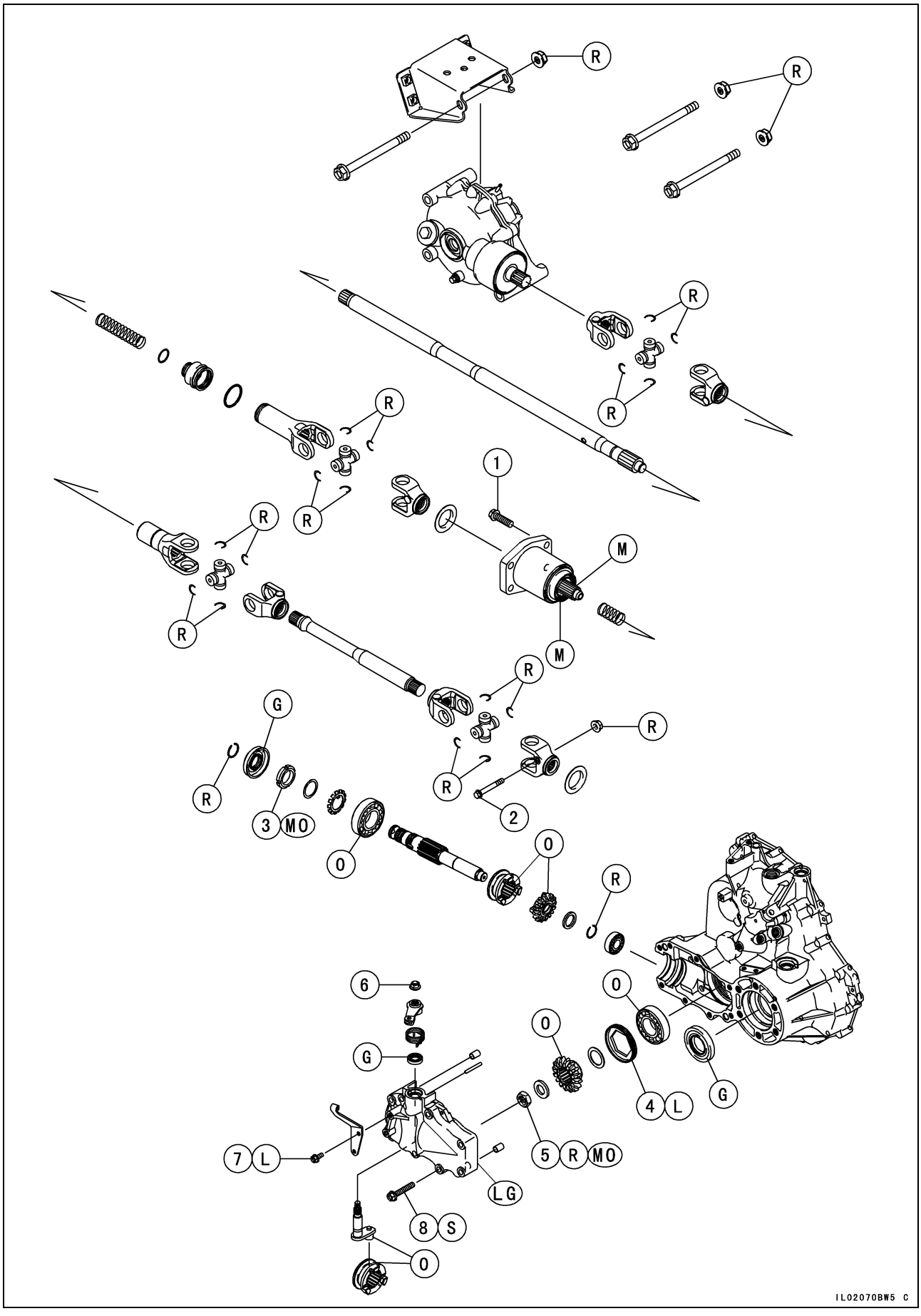

Exploded View (KAF400-A/C)

No.	Fastener	Torque			Remarks
		N·m	kgf·m	ft·lb	
1	Bearing Housing Bolts	42	4.2	31	
2	Yoke Stop Bolt	8.8	0.90	78 in·lb	
3	Driven Bevel Gear Slotted Nut	118	12	87	MO
4	Bearing Holder	137	14	101	L
5	Drive Bevel Gear Nut	137	14	101	R, MO
6	2WD/4WD Shift Shaft Nut	20	2.0	14	
7	2WD/4WD Shift Cable Holder Bolts	8.8	0.90	78 in·lb	L
8	Bevel Gear Case Bolts	20	2.0	14	S

G: Apply grease.
L: Apply a non-permanent locking agent.
LG: Apply liquid gasket (Liquid Gasket, TB1216B: 92104-1064).
M: Apply molybdenum disulfide grease.
MO: Apply molybdenum disulfide oil. (The weight ratio of the mixture between engine oil and disulfide grease is 10 : 1)
O: Apply oil.
R: Replacement Parts
S: Follow the specific tightening sequence.

Exploded View (KAF400-B)

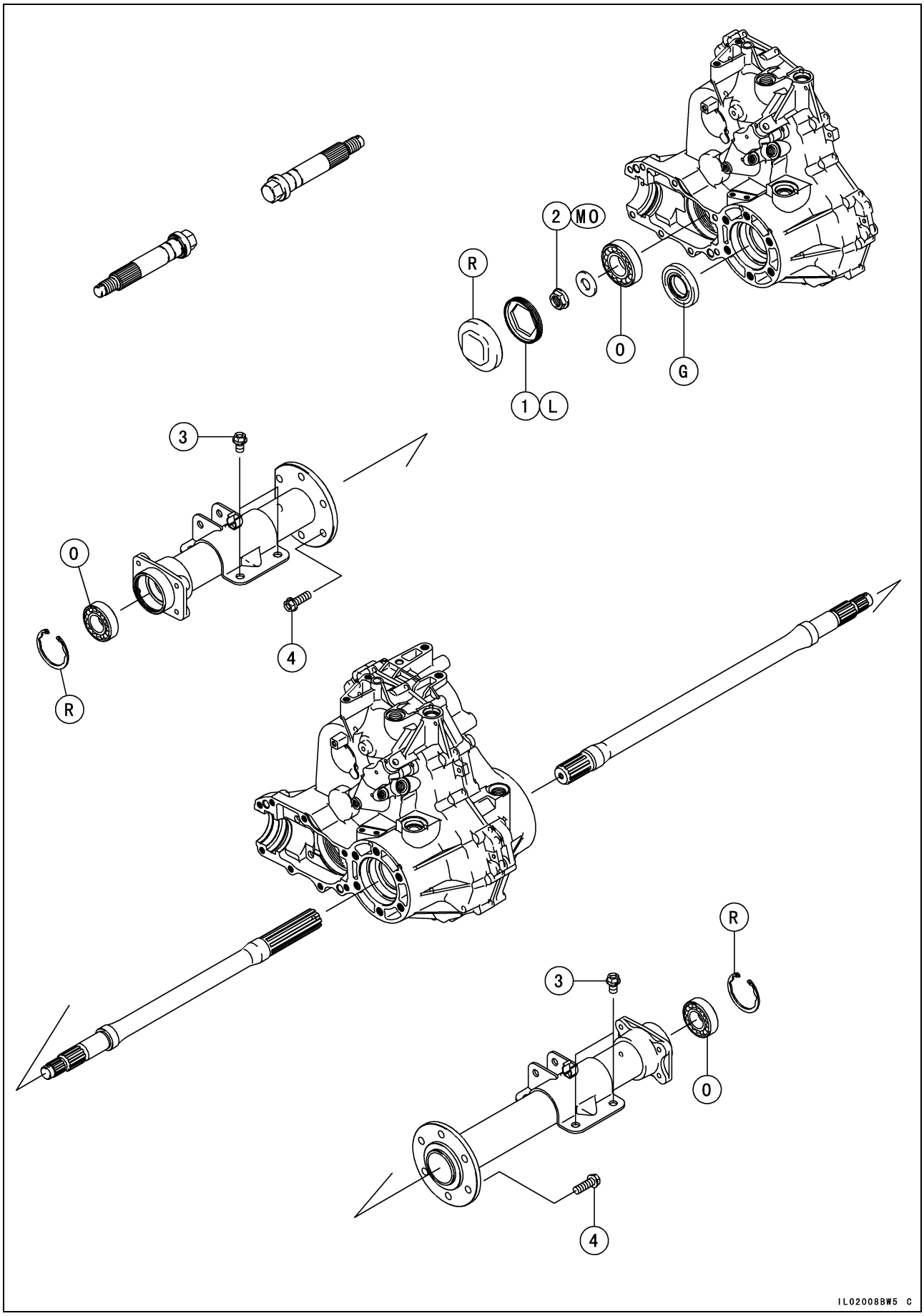

Exploded View (KAF400-B)

No.	Fastener	Torque			Remarks
		N·m	kgf·m	ft·lb	
1	Bearing Holder	137	14	101	L
2	Drive Shaft Nut	137	14	101	MO
3	Rear Axle Bracket Bolts	40	4.1	30	
4	Rear Axle Bracket Flange Bolts	49	5.0	36	

G: Apply grease.
L: Apply a non-permanent locking agent.
MO: Apply molybdenum disulfide oil solution (mixture of the engine oil and molybdenum disulfide grease in a weight ratio 10 : 1).
O: Apply oil.
R: Replacement Parts

Specifications

Item	Standard
Front Final Gear Case (KAF400-A/C)	
Gear Case Oil:	
Type	API "GL-5 or GL-6" hypoid gear oil for LSD (Limited Slip Differential gears)
Viscosity	SAE90 (GL-6) or SAE140 (GL-5)
Capacity	0.35 L (0.37 US qt)
Oil Level	Filler opening level
LSD Clutch Torque	4.9 ~ 13 N·m (0.5 ~ 1.3 kgf·m, 43 ~ 110 in·lb)
Outside Friction Plate Thickness	1.3 ~ 1.4 mm (0.051 ~ 0.055 in.)
Inside Friction Plate Thickness	1.7 ~ 1.8 mm (0.067 ~ 0.071 in.)
Pinion Gear Preload Torque	0.5 N·m (0.05 kgf·m, 4.4 in·lb) or less
Bevel Gear Backlash	0.06 ~ 0.18 mm (0.0024 ~ 0.0071 in.) (at pinion gear spline)
Bevel Gear Case (KAF400-A/C)	
Bevel Gear Backlash	0.35 ~ 0.50 mm (0.0138 ~ 0.0197 in.) (at driven bevel gear tooth)

Special Tools and Sealants

Bearing Puller:
57001-135

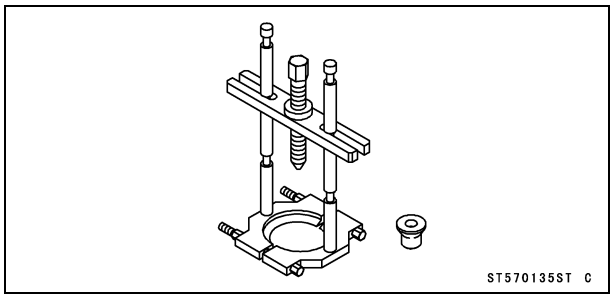

Outside Circlip Pliers:
57001-144

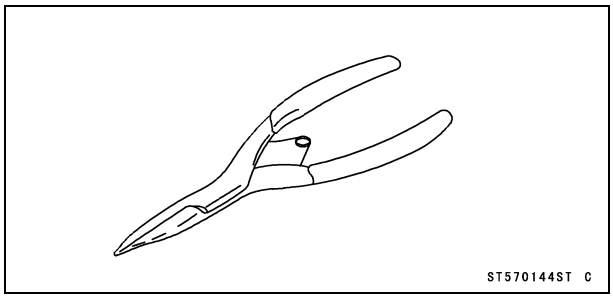

Pinion Gear Holder, m1.0:
57001-1281

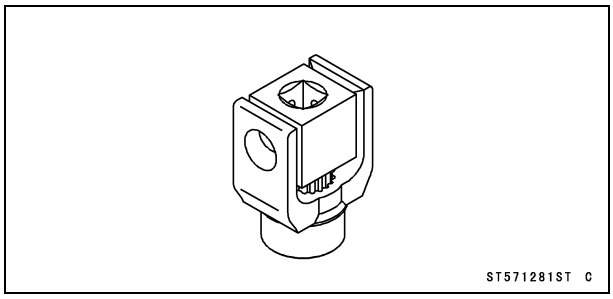

Socket Wrench:
57001-1283

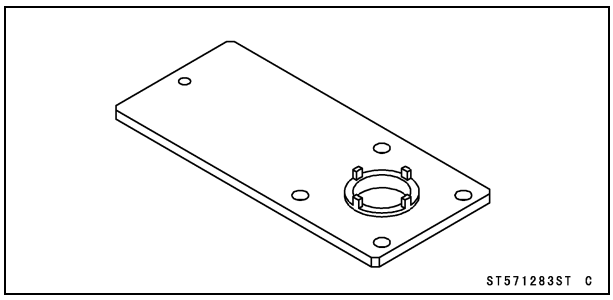

Socket Wrench, Hex 48:
57001-1401

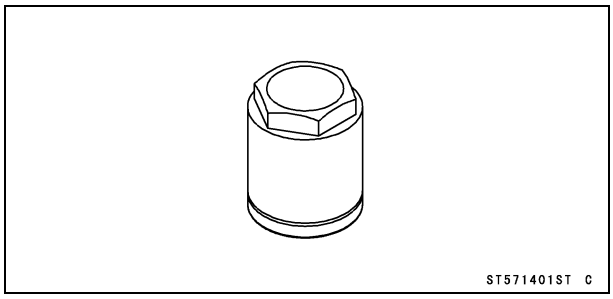

Pinion Gear Holder, m1.0:
57001-1632

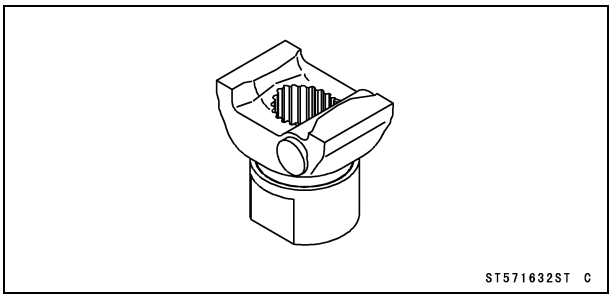

Snap Ring Guide, ϕ20:
57001-1633

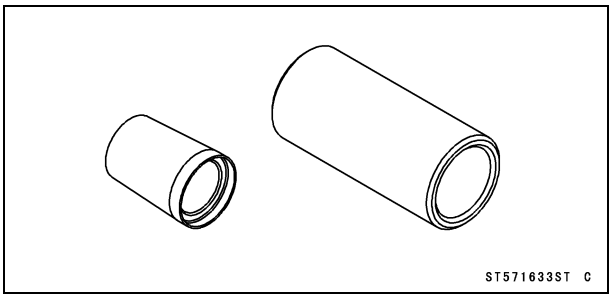

Snap Ring Guide, ϕ22:
57001-1634

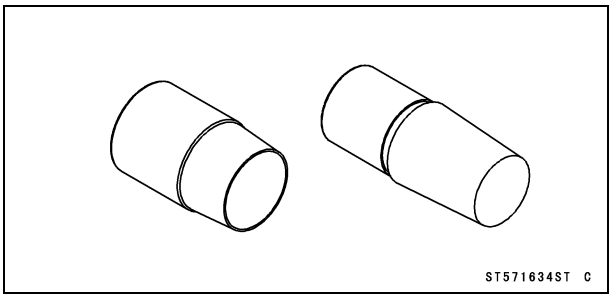

Bevel Gear Holder:
57001-1638

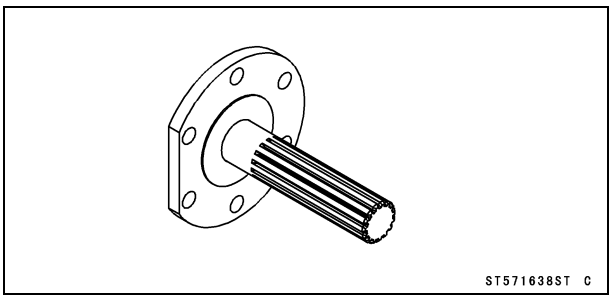

Bevel Gear Holder:
57001-1639

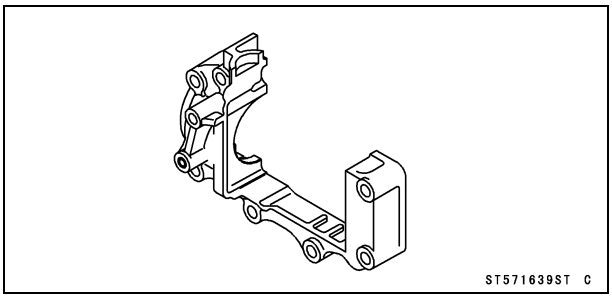

Special Tools and Sealants

Liquid Gasket, TB1216:
92104-1063

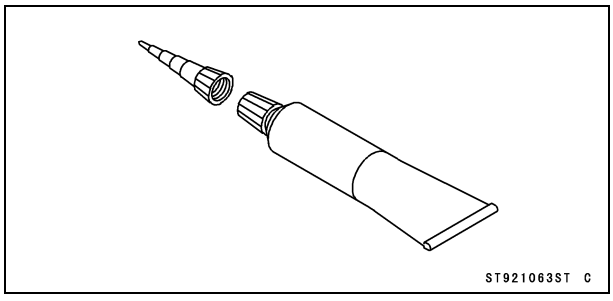

Liquid Gasket, TB1216B:
92104-1064

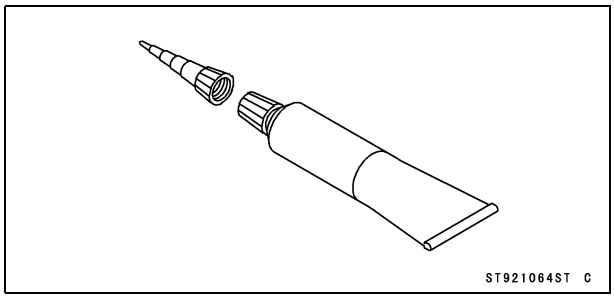

Front Final Gear Case (KAF400-A/C)

Front Final Gear Case Oil Level Inspection

- Remove:
  Filler Cap [A]

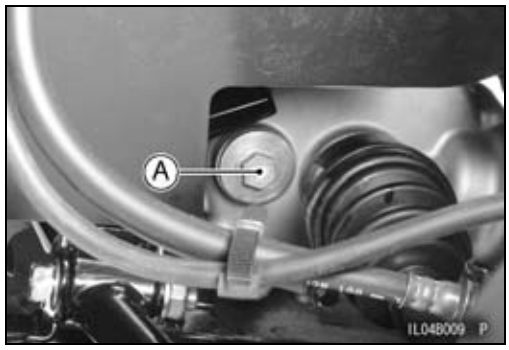

NOTICE
Be careful not to allow any dirt or foreign materials to enter the gear case.

- Check the oil level. The oil level should come to the bottom [A] of the filler opening [B].

★If it is insufficient, first check the front final gear case for oil leakage, remedy it if necessary, and add oil through the filler opening. Use the same type and brand of oil that is already in the final gear case.

- Be sure the O-ring [C] is in place, and tighten the filler cap.

Torque - Front Final Gear Case Oil Filler Cap: 29 N·m (3.0 kgf·m, 22 ft·lb)

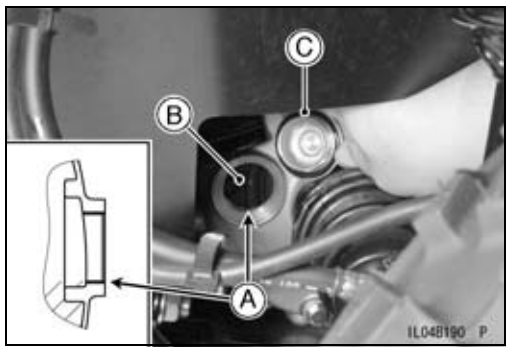

Front Final Gear Case Oil Change

- Refer to Final Drive section in the Periodic Maintenance chapter.

Front Final Gear Case Removal

- Remove:
  Front Guard Cover (see Frame chapter)
  Front Final Gear Case Oil (drain, see Front Final Gear Case Oil Change in the Periodic Maintenance chapter)
  Front Axles (see Front Axle Removal)
- Loosen:
  Front Final Gear Case Lower Mounting Bolts [A]
- Remove:
  Front Final Gear Case Mounting Bolt [B] and Nuts.

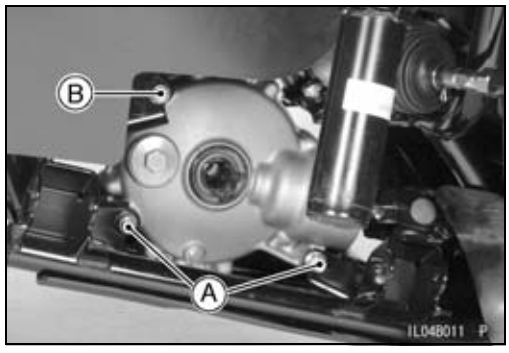

- Remove:
  Bracket Bolts [A]
  Bracket [B]
  Front Final Gear Case Lower Bolts and Nuts

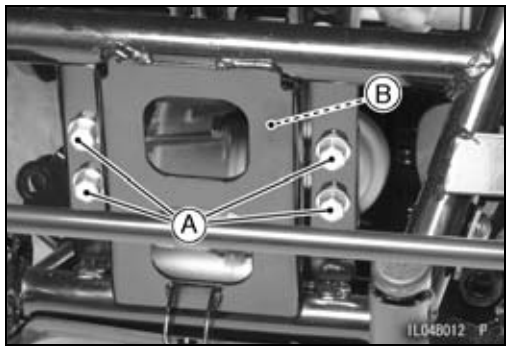

Front Final Gear Case (KAF400-A/C)

- Disconnect:
  Gear Case Breather Hose [A]
- Move the front final gear case [B] toward the front [C], and remove the case from yoke [D] of the propeller shaft.

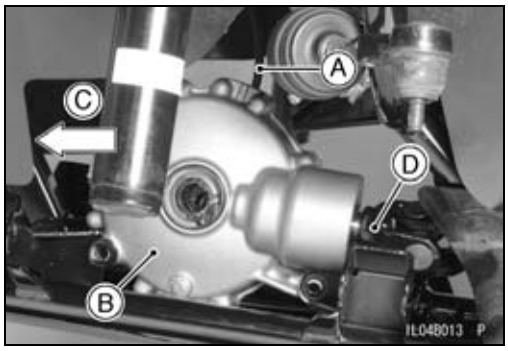

Front Final Gear Case Installation

- Insert the pinion gear shaft [A] of the gear case in the yoke [B], and put the gear case on the frame.
- Route the gear case breather hose correctly according to the Appendix chapter.
- Adjust the front final gear case oil (see Front Final Gear Case Oil Change the Periodic Maintenance chapter).

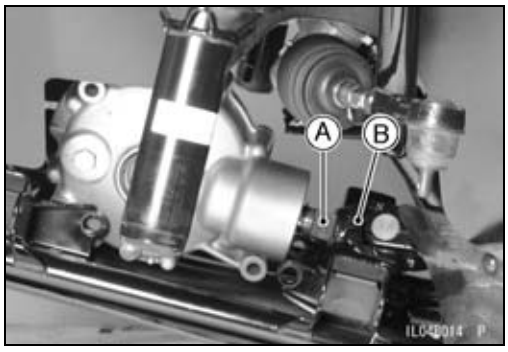

Front Final Gear Case Disassembly

- Remove:
  Front Final Gear Case (see Front Final Gear Case Removal)
  Circlip [A]

  Special Tool - Outside Circlip Pliers [B]: 57001-144
- Remove:
  Oil Seal [C]

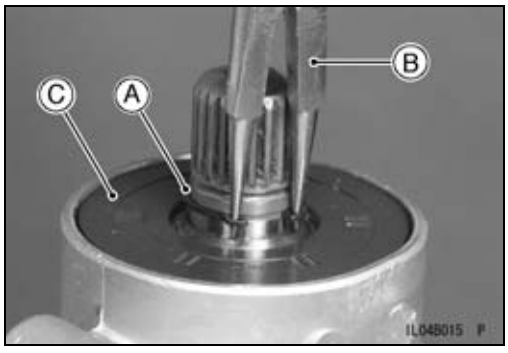

- Pry open the staking [A] of the pinion gear bearing holder [B] with a small chisel.

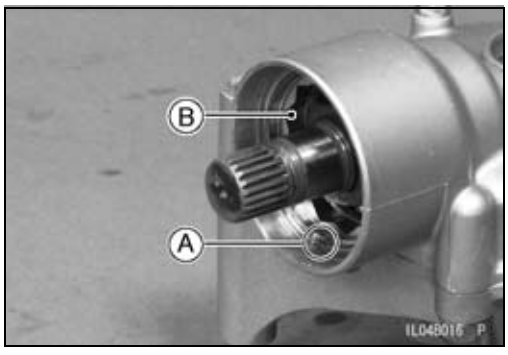

- Unscrew the pinion gear bearing holder, using the socket wrench [A].

  Special Tool - Socket Wrench, Hex 48: 57001-1401

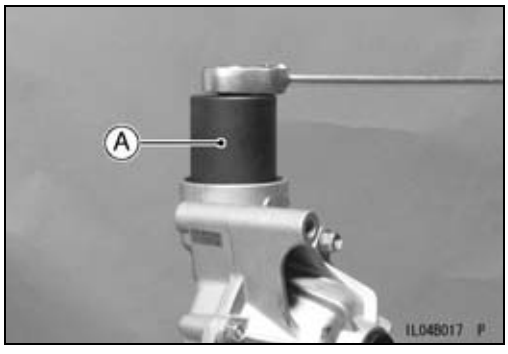

Front Final Gear Case (KAF400-A/C)

- Remove:
  Ring Gear Cover Bolts M8 [A] (first)
  Ring Gear Cover Bolts M10 [B]
  Ring Gear Cover [C]

○Using the ply points [D], split the front final gear case.

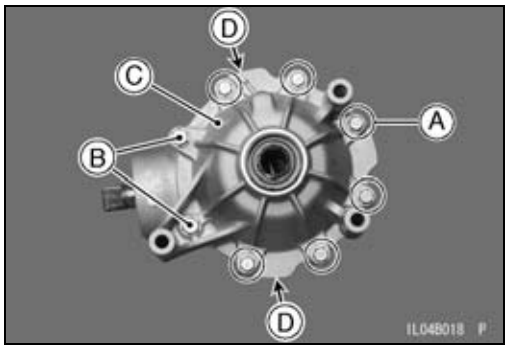

★If the case seems too difficult to break free, install suitable M8 bolts [A] as shown. And then drive the bolt end using a copper mallet to remove the cover.

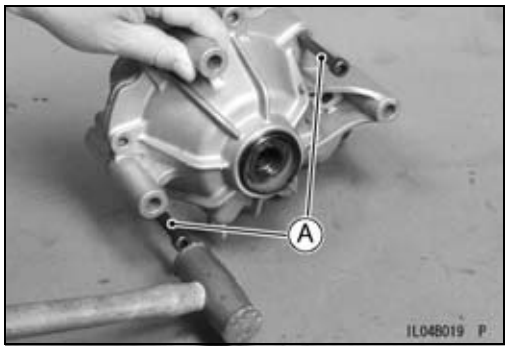

- Remove:
  Ring Gear Assembly [A]
  Shim [B] (both sides)

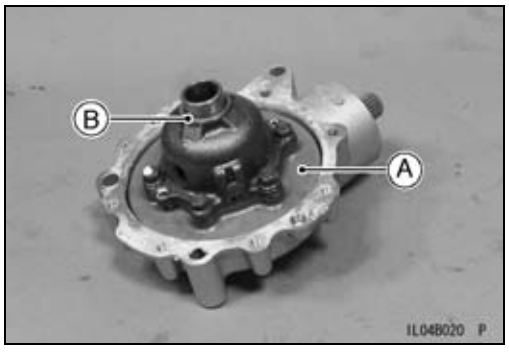

- To remove the pinion gear unit [A], tap the case [B] with a plastic or rubber mallet.

★If the pinion gear seems too difficult to remove free, apply heat with a drier to expand the case.

NOTICE
Do not heat the case with a torch. This will warp the case.

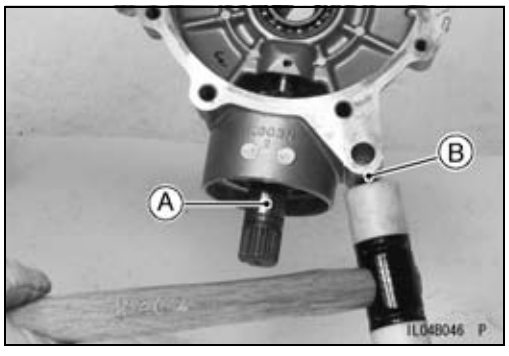

Front Final Gear Case Assembly

- Visually check the pinion gear and ring gear for scoring, chipping, or other damage.

★Replace the bevel gears as a set if either gear is damaged since they are lapped as a set in the factory to get the best tooth contact.

Front Final Gear Case (KAF400-A/C)

● Assemble the gear case temporarily for the gear backlash adjustment.
○Clean the mating surface of the front final gear case and cover.
○Install:
Pinion Gear Unit [A]
Shim [B]
Ring Gear Assembly [C]

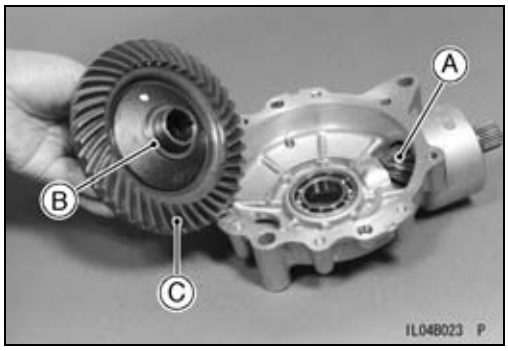

○Install:
Shim [A]

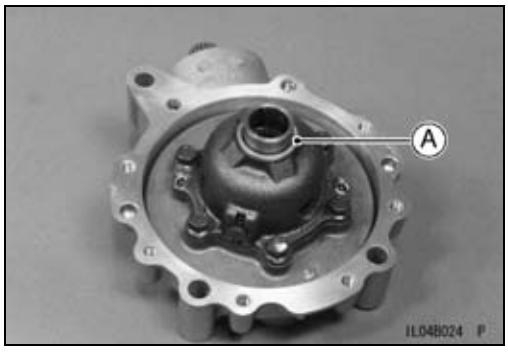

● Apply a non-permanent locking agent:
Ring Gear Cover Bolts M10 [A]
○Tighten:

Torque - Ring Gear Cover Bolts M10: 47 N·m (4.8 kgf·m, 35 ft·lb)
Ring Gear Cover Bolts M8 [B]: 25 N·m (2.5 kgf·m, 18 ft·lb)

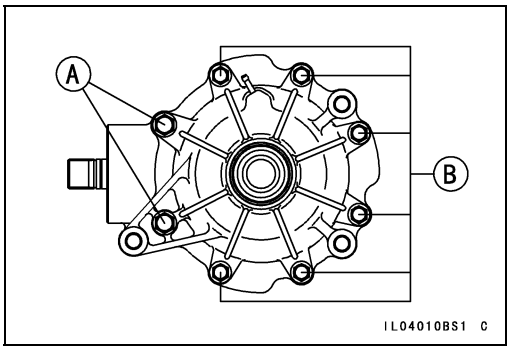

○Tighten:

Torque - Pinion Gear Bearing Holder [A]: 98 N·m (10 kgf·m, 72 ft·lb)

Special Tool - Socket Wrench, Hex 48: 57001-1401

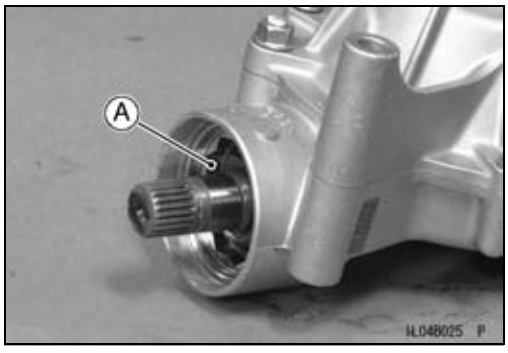

○Adjust the gear backlash and tooth contact pattern (see Front Final Bevel Gear Adjustment).
○Split the front final gear case (see Front Final Gear Case Disassembly)

Front Final Gear Case (KAF400-A/C)

- Clean the mating surface of the front final gear case and cover.
- Apply liquid gasket to mating surface [A] and flange [B] of the gear case cover.

  Sealant - Liquid Gasket, TB1216B: 92104-1063

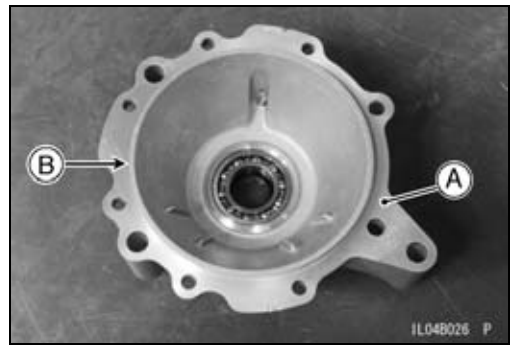

- Apply a non-permanent locking agent:
  Ring Gear Cover Bolts M10 [A]
- Tighten:

  Torque - Ring Gear Cover Bolts M10: 47 N·m (4.8 kgf·m, 35 ft·lb)
  Ring Gear Cover Bolts M8 [B]: 25 N·m (2.5 kgf·m, 18 ft·lb)

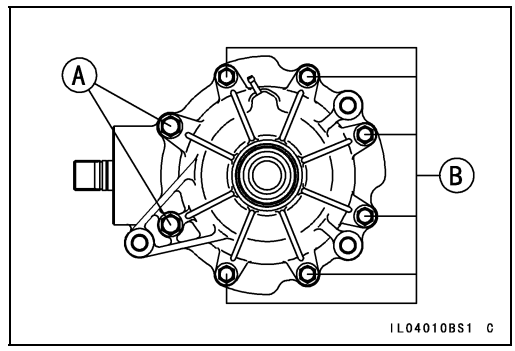

- Stake [A] the pinion gear bearing holder [B] with a punch to secure it.

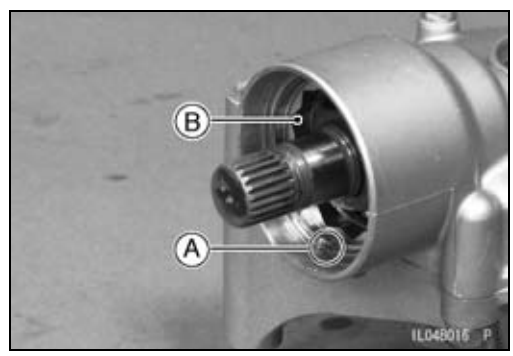

- Apply grease to the oil seal lips, and install it in the gear case.
  Oil Seal [A]
- Install:
  Circlip [B] (second groove [C] as shown)

  Special Tool - Outside Circlip Pliers: 57001-144

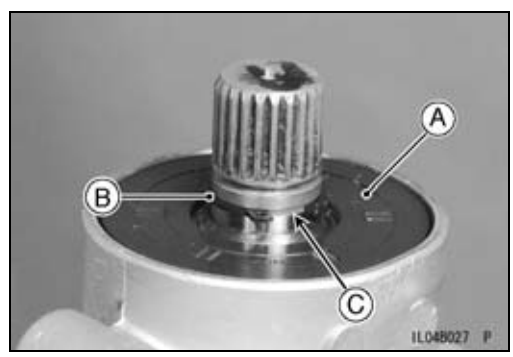

Differential Unit Disassembly

- Remove:
  Differential Unit (see Front Final Gear Case Disassembly)
  Differential Gear Housing Bolts [A]
  Differential Gear Unit [B]

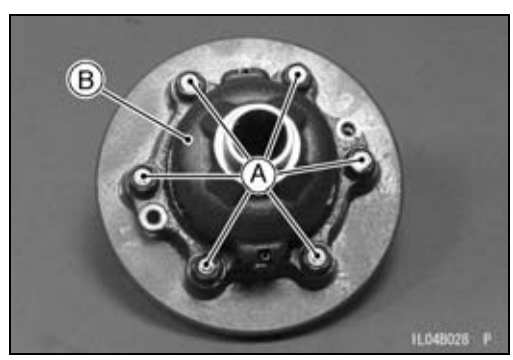

Front Final Gear Case (KAF400-A/C)

- Remove:
  Bevel Gear [A]

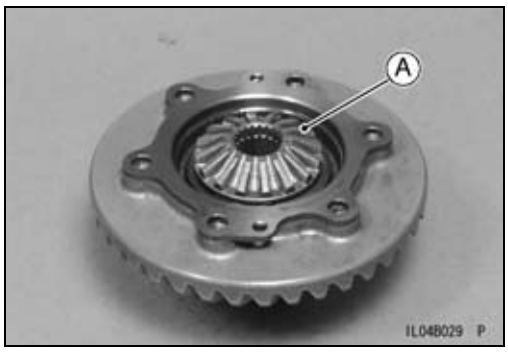

- Remove:
  Inside Friction Plates [A]
  Steel Plate [B]
  Outside Friction Plate

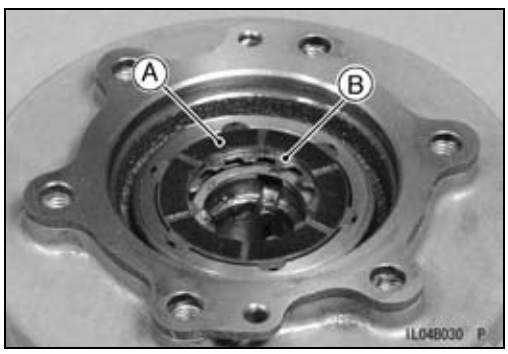

- Remove:
  Clutch Springs [A]
  Washer [B]

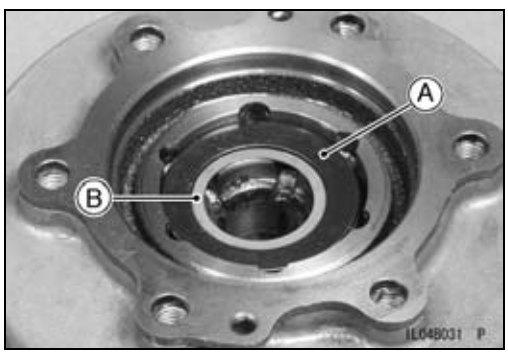

- Remove:
  Clutch Spring Shims [A]

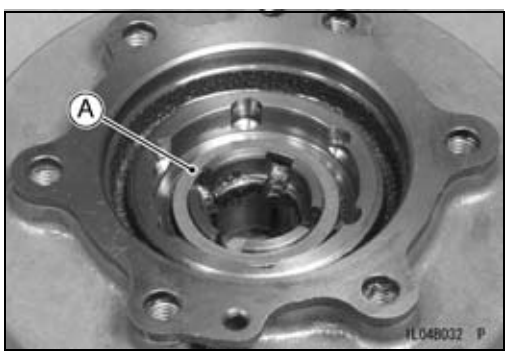

- Remove:
  Spring Pins [A]
  Pinion Shaft [B]
  Bevel Gears [C]
  Collar [D]
  Washer [E]

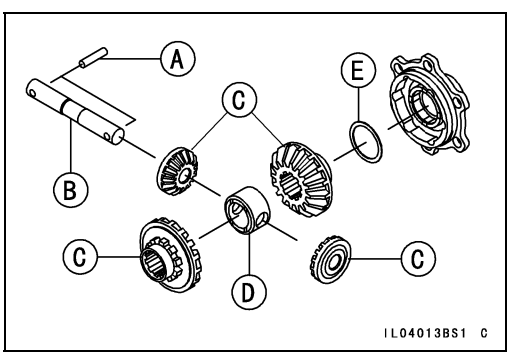

Front Final Gear Case (KAF400-A/C)

Differential Unit Assembly

- Inspect the LSD clutch plates and (see LSD Clutch Plate Inspection) and other differential unit parts. Replace any damaged parts.
- Apply specified gear oil to the differential unit parts.
- Note direction and position of the friction plates and clutch spring.
  Clutch Spring Shims [A]
  Washer [B]
  Clutch Springs [C]
  Outside Friction Plate [D]
  Steel Plate [E]
  Inside Friction Plate [F]

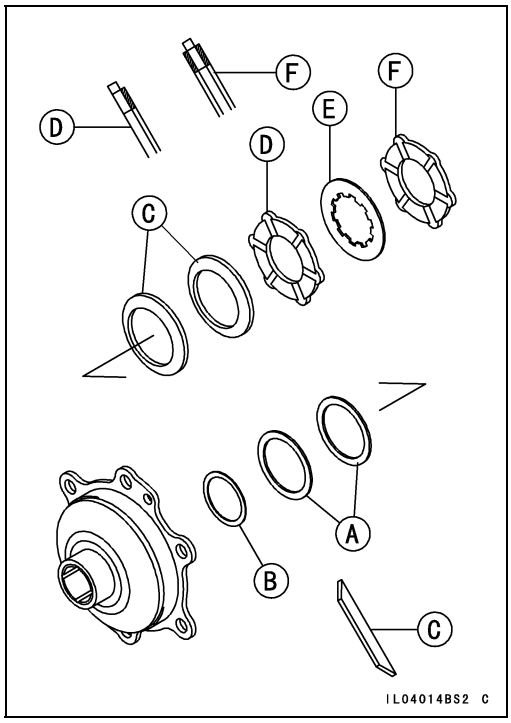

- Install the bevel gear [A] so that the teeth [B] fit in the grooves [C] fit.

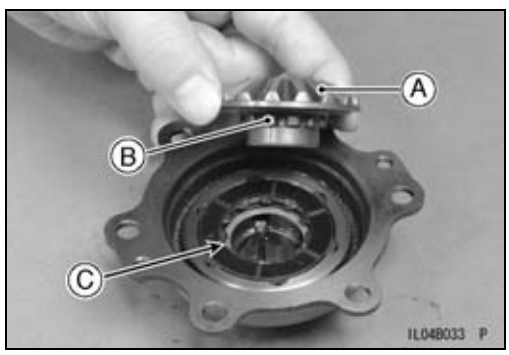

- Install the LSD clutch case [A] on the ring gear [B].
○Align the bolt holes [C].

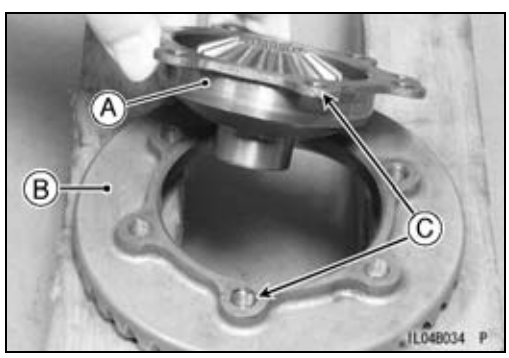

- Install the differential gear unit [A] on the LSD clutch case [B].
○Align the small holes [C].

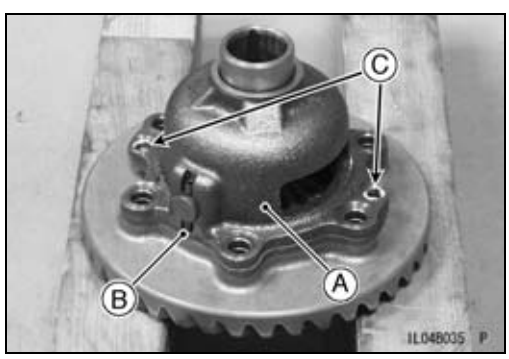

Front Final Gear Case (KAF400-A/C)

- Apply a non-permanent locking agent:
  Differential Gear Housing Bolts [A]
- Finger-tighten the all bolts first.
- Tighten:

Torque - Differential Gear Housing Bolts: 49 N·m (5.0 kgf·m, 36 ft·lb)

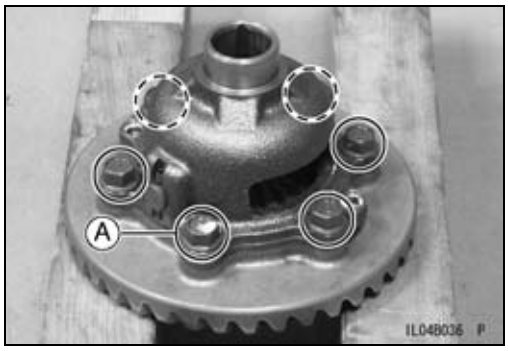

LSD Clutch Torque Inspection

- After assembling the differential unit and ring gear [A], check the LSD clutch torque.
- Insert both front axles in the unit.
- Hold one of the front axles with a vise.
- Install the hub nut on the other axle.
- Measure the clutch torque using a torque wrench [B]. Turn the wrench evenly.

○The clutch torque is the mean torque reading during about a quarter turn of the wrench.

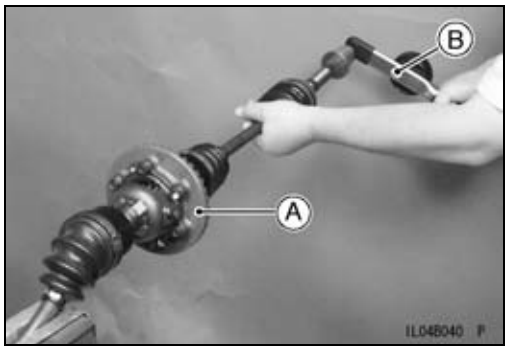

LSD Clutch Torque
Standard: 4.9 ~ 13 N·m (0.5 ~ 1.3 kgf·m, 43 ~ 110 in·lb)

★If the clutch torque is out of the specified range, disassemble the differential unit (see Differential Unit and Ring Gear Disassembly) and replace either of the clutch spring shim(s).

- Also, check the clutch plates and replace them as necessary (see Clutch Plate Inspection).
- To increase clutch torque, increase the thickness of the shim(s).

○Change the thickness a little at a time.

Clutch Spring Shims

Thickness	Part Number
1.0 mm (0.039 in.)	92180-1214
1.2 mm (0.047 in.)	92180-1215
1.4 mm (0.055 in.)	92180-1216
1.6 mm (0.063 in.)	92180-1217
1.8 mm (0.071 in.)	92180-1218

- Recheck the clutch torque and readjust as necessary.

LSD Clutch Plate Inspection

- Visually inspect the friction plates and steel plates to see if they show any signs of seizure, overheating, or uneven wear.

★If any plates show signs of damage, or if the friction plates have worn, replace the friction plates and steel plates as a set.

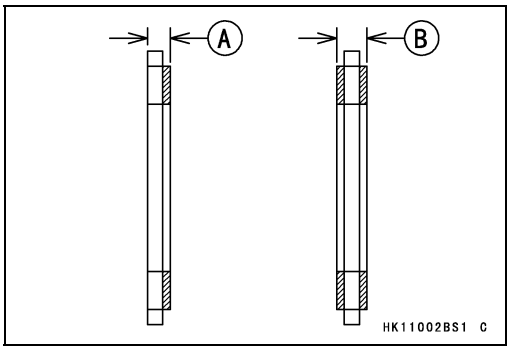

Outside Friction Plate Thickness [A]
Standard: 1.3 ~ 1.4 mm (0.051 ~ 0.055 in.)

Inside Friction Plate Thickness [B]
Standard: 1.7 ~ 1.8 mm (0.067 ~ 0.071 in.)

Front Final Gear Case (KAF400-A/C)

Pinion Gear Unit Disassembly

- Remove the pinion gear unit (see Front Final Gear Case Disassembly).
- Holding the pinion gear unit with the pinion gear holder [A], unscrew the pinion gear nut [B]

  Special Tool - Pinion Gear Holder, m1.0: 57001-1281

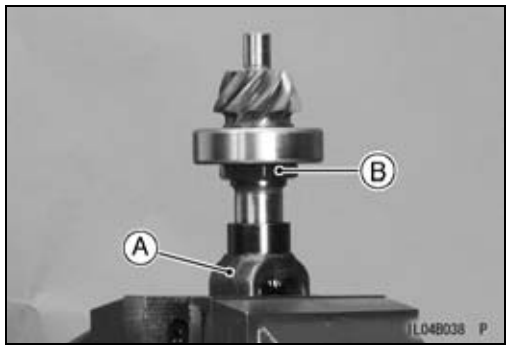

- Remove the ball bearing as necessary.

  Special Tool - Bearing Puller: 57001-135

Pinion Gear Unit Assembly

- The pinion gear and ring gear are lapped as a set in the factory to get the best tooth contact. They must be replaced as a set.
- Visually inspect the bearing for abrasion, color change, or other damage.

★If there is any doubt as to the condition of a bearing, replace the bearing.

- Be sure to check and adjust the pinion gear preload and the bevel gear backlash and tooth contact, when any of the backlash-related parts are replaced (see Front Final Bevel Gear Adjustment).

- Install:
  Pinion Gear [A]
  Shim [B]
  Ball Bearing [C]
- Apply a non-permanent locking agent to the pinion gear nut [D].
- Tighten the pinion gear nut so that the stepped side [E] faces outward.

  Torque - Pinion Gear Nut: 156 N·m (16 kgf·m, 115 ft·lb)

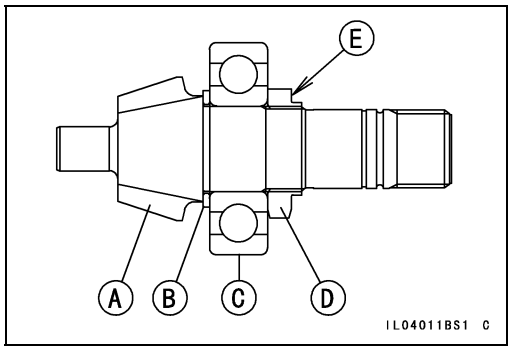

Front Final Gear Case (KAF400-A/C)

Front Final Bevel Gear Adjustment

In order to prevent one gear from moving away from the other gear under load, the pinion gear must be properly **pre-loaded**. Also the **backlash** (distance one gear will move back and forth without moving the other gear) and **tooth contact pattern** of the bevel gears must be correct to prevent the gears from making noise and being damaged.

Above three adjustments are of critical importance and must be carried out following the correct sequence and method.

- When any one of the backlash-related parts are replaced or the pinion gear nut is loosened; even if the purpose is not to replace the parts, check and adjust the pinion gear preload, the bevel gear backlash, and tooth contact by replacing shims.
- The amount of backlash is influenced by the ring gear position more than by the pinion gear position.
- Tooth contact location is influenced by pinion gear position more than by ring gear position.

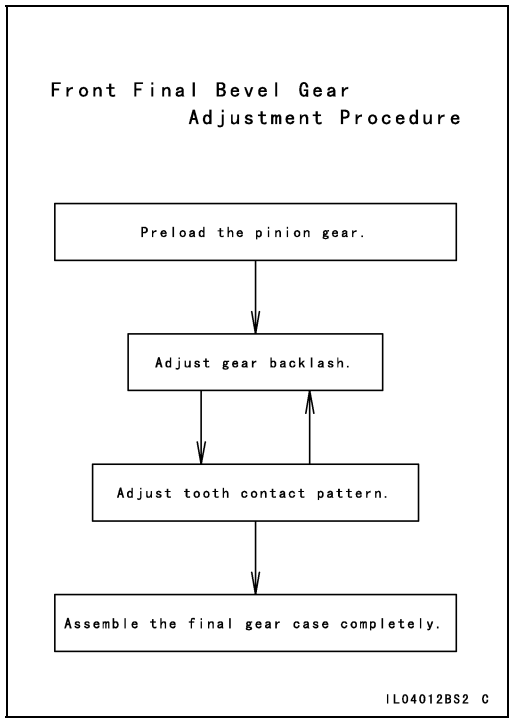

Pinion Gear Preload Adjustment:

- Check and adjust the pinion gear preload in the following cases.

○When any of the parts listed below are replaced with new ones.

Pinion Gear
Shims
Ball Bearings

- Install the pinion gear and tighten the pinion gear nut to the specified torque.

Torque - Pinion Gear Nut: 156 N·m (16 kgf·m, 115 ft·lb)

- Do not install the oil seal, and do not lock the bearing holder until the correct preload is obtained.

NOTICE
To start with, choose a shim so that the bevel gears are just SNUG with NO play but also with NO preload. **An over-preload on the gears could damage the gears.**

- Measure the pinion gear preload. The preload is the force or torque which is needed to start the gear shaft turning.

Torque Wrench [A]

Special Tool - Pinion Gear Holder, m1.0 [B]: 57001-1281

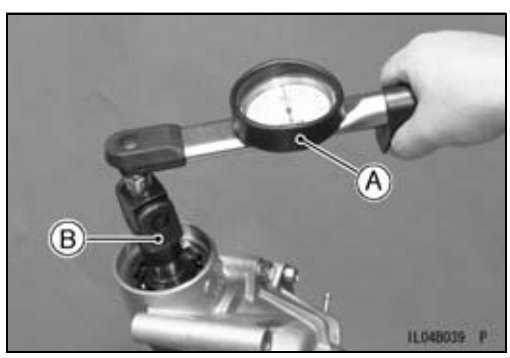

Front Final Gear Case (KAF400-A/C)

★If the preload is out of the specified range, replace the ring gear shim(s).
○To increase preload, decrease the size of the shim(s). To decrease preload, increase the size of the shim(s).
○Change the thickness a little at a time.
● Recheck the preload, and readjust as necessary.

● Measure the preload using a torque wrench [A].

Pinion Gear Preload Torque:
0.5 N·m (0.05 kgf·m, 4.4 in·lb) or less

Special Tool - Pinion Gear Holder, m1.0 [B]: 57001-1281

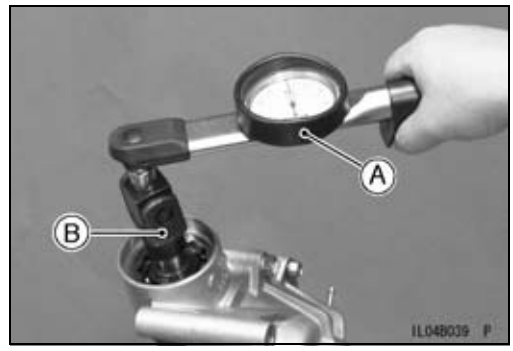

Backlash Adjustment
● Check and adjust the gear backlash when any of the backlash-related parts are replaced with new ones.
● Clean any dirt and oil off the bevel gear teeth.
● Assemble the front final gear case (see Front Final Gear Case Assembly). Do not apply liquid gasket during adjustment.
○Check the backlash during tightening of the ring gear cover bolts and stop tightening them immediately if the backlash disappears. Then, change the ring gear shim to a thinner one.
● Set up a dial gauge against a spline of pinion gear shaft to check gear backlash shown.
● To measure the backlash, move the pinion gear back and forth while holding the front axle steady. The difference between the highest and the lowest gauge reading is the amount of backlash.
★If the backlash is not within the limit, replace the ring gear shims. To increase backlash, decrease the thickness of the shim(s). To decrease backlash, increase the thickness of the shim(s).
○Change the thickness a little at a time.
● Recheck the backlash, and readjust as necessary.

● Move the pinion gear shaft back and forth [A].
Dial Gauge [B]

Bevel Gear Backlash
Standard: 0.06 ~ 0.18 mm (0.0024 ~ 0.0071 in.) (at pinion gear spline)

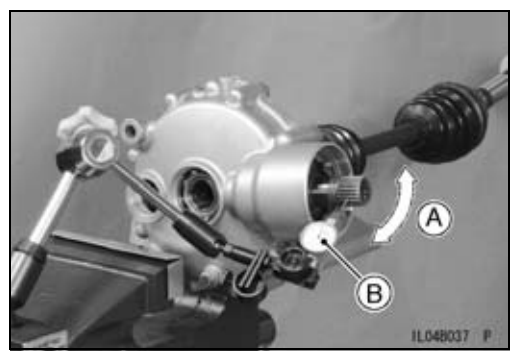

Front Final Gear Case (KAF400-A/C)

Front Final Gear Case (Backlash-Related Parts)

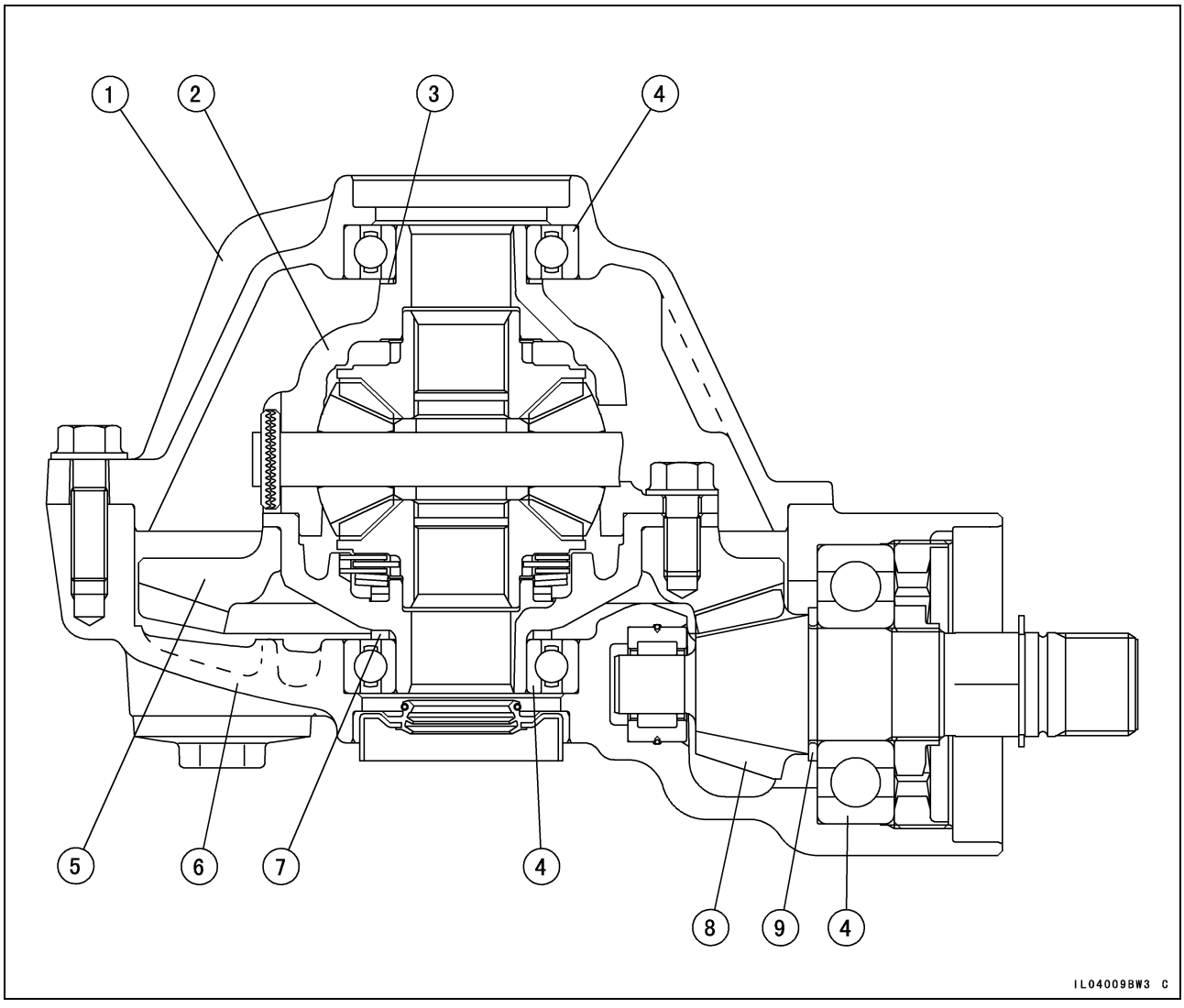

1. Front Final Gear Case Cover
2. Differential Unit
3. Ring Gear Right Shim
4. Ball Bearings
5. Ring Gear
6. Ring Gear Case
7. Ring Gear Left Shim
8. Pinion Gear
9. Pinion Gear Shim

Front Final Gear Case (KAF400-A/C)

Ring Gear Right Shims

Thickness	Part Number
0.75 mm (0.0295 in.)	92180-1254
0.80 mm (0.0315 in.)	92180-1255
0.85 mm (0.0335 in.)	92180-1256
0.90 mm (0.0354 in.)	92180-1257
0.95 mm (0.0374 in.)	92180-1258
1.00 mm (0.0394 in.) (Primary)	92180-1259
1.05 mm (0.0413 in.)	92180-1260
1.10 mm (0.0433 in.)	92180-1261
1.15 mm (0.0453 in.)	92180-1262
1.20 mm (0.0472 in.)	92180-1263
1.25 mm (0.0492 in.)	92180-1264

Ring Gear Left Shims

Thickness	Part Number
1.75 mm (0.0689 in.)	92180-1231
1.80 mm (0.0709 in.)	92180-1232
1.85 mm (0.0728 in.)	92180-1233
1.90 mm (0.0748 in.)	92180-1234
1.95 mm (0.0768 in.)	92180-1235
2.00 mm (0.0787 in.) (Primary)	92180-1236
2.05 mm (0.0807 in.)	92180-1237
2.10 mm (0.0827 in.)	92180-1238
2.15 mm (0.0846 in.)	92180-1239
2.20 mm (0.0866 in.)	92180-1240
2.25 mm (0.0886 in.)	92180-1241

Pinion Gear Shims

Thickness	Part Number
1.82 mm (0.0717 in.)	92180-1219
1.88 mm (0.0740 in.)	92180-1220
1.94 mm (0.0764 in.)	92180-1221
2.00 mm (0.0787 in.) (Primary)	92180-1222
2.06 mm (0.0811 in.)	92180-1223
2.12 mm (0.0835 in.)	92180-1224
2.18 mm (0.0858 in.)	92180-1225

Front Final Gear Case (KAF400-A/C)

Tooth Contact Adjustment

- Clean any dirt and oil off the bevel gear teeth.
- Apply checking compound to 4 or 5 teeth on the pinion gear.

NOTE

○*Apply checking compound to the teeth in a thin, even coat with a fairly stiff paint brush. If painted too thickly, the exact tooth pattern may not appear.*

○*The checking compound must be smooth and firm, with the consistency of tooth paste.*

○*Special compounds are available from automotive supply stores for the purpose of checking differential gear tooth patterns and contact. Use one of these for checking the bevel gears.*

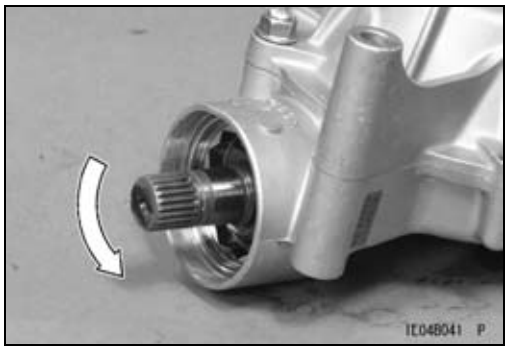

- Assemble the front final gear case (see Front Final Gear Case Assembly). Do not apply liquid gasket during adjustment.
- Turn the pinion gear shaft for one revolution in the drive and reverse (coast) direction, while creating a drag on the ring gear.
- Remove the ring gear and pinion gear unit to check the drive pattern and coast pattern of the bevel gear teeth.

○The tooth contact patterns of both (drive and coast) sides should be centrally located between the top and bottom of the tooth. The drive pattern can be a little closer to the toe and the coast pattern can be a somewhat longer and closer to the toe.

★If the tooth contact pattern is incorrect, replace the pinion gear shim(s), following the examples shown.

- Then erase the tooth contact patterns and check them again. Also check the backlash every time the shim(s) are replaced. Repeat the shim change procedure as necessary.

NOTE

○*If the backlash is out of the standard range after changing the pinion gear shim(s), change the ring gear shim(s) to correct the backlash before checking the tooth contact pattern.*

Front Final Gear Case (KAF400-A/C)

Correct Tooth Contact Pattern: No adjustment is required.

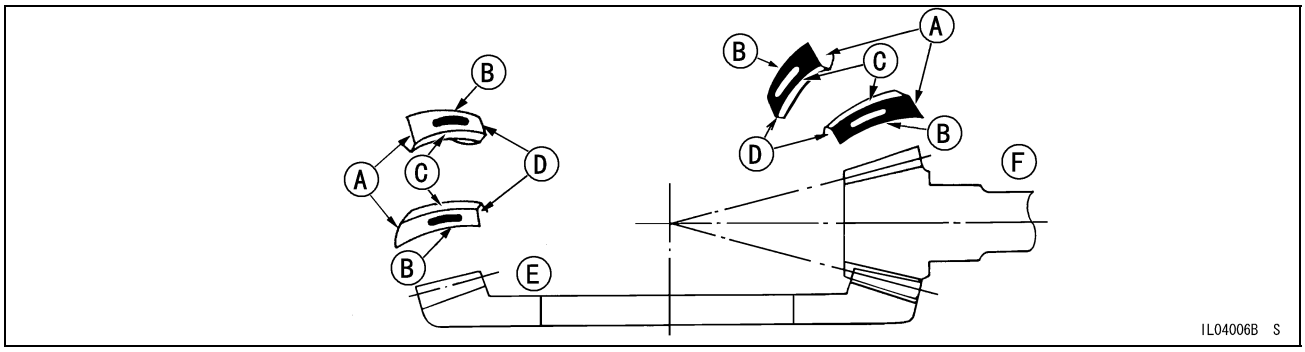

Heel [A] Bottom [B] Top [C] Toe [D] Ring Gear [E] Pinion Gear [F]

Incorrect Tooth Contact Patterns (Example 1)

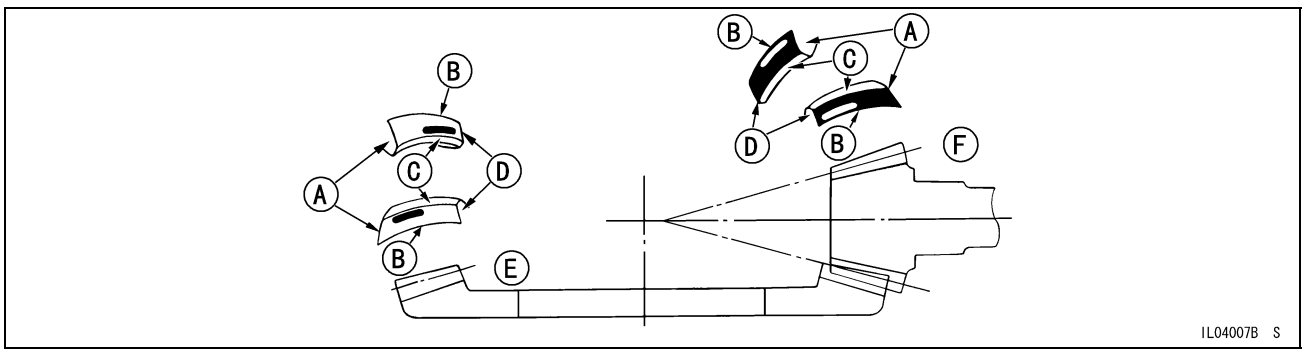

○Decrease the thickness of the pinion gear shim(s) by **0.05 mm (0.002 in.)** to correct the pattern shown above. Repeat in 0.05 mm (0.002 in.) steps if necessary.

Heel [A] Bottom [B] Top [C] Toe [D] Ring Gear [E] Pinion Gear [F]

Incorrect Tooth Contact Patterns (Example 2)

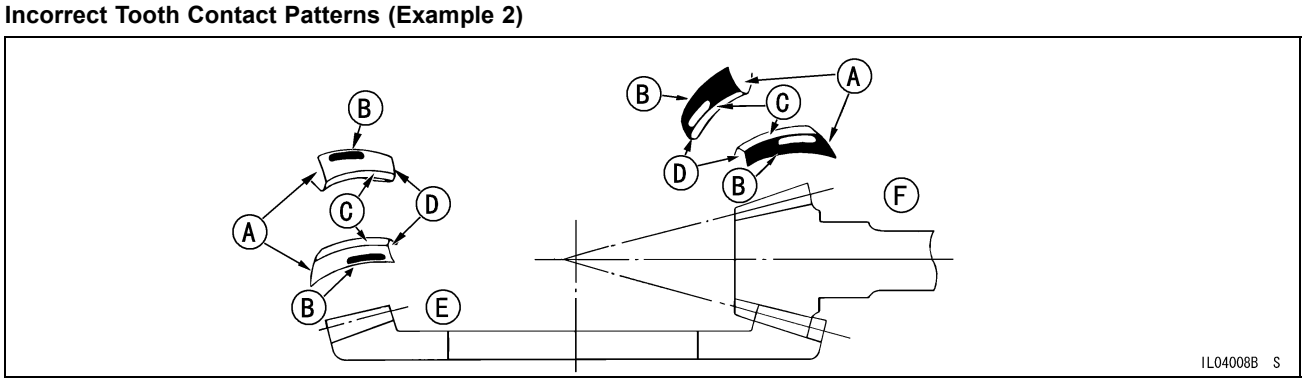

○Increase the thickness of the pinion gear shim(s) by **0.05 mm (0.002 in.)** to correct the pattern shown above. Repeat in 0.05 mm (0.002 in.) steps if necessary.

Heel [A] Bottom [B] Top [C] Toe [D] Ring Gear [E] Pinion Gear [F]

Front Final Gear Case (KAF400-A/C)

Bevel Gear Inspection

- Visually check the bevel gears [A] for scoring, chipping, or other damage.

★Replace the bevel gears as a set if either gear is damaged.

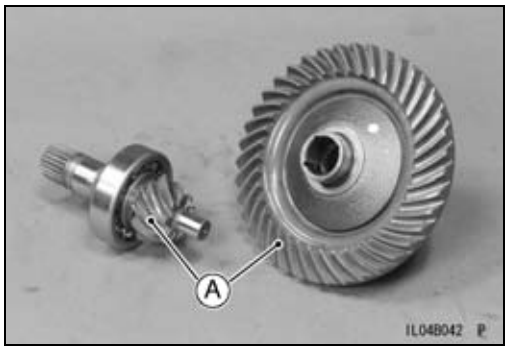

Differential Gear Inspection

- Visually check the differential gears [A] for scoring, chipping, or other damage.
- Also, inspect the differential pinion gear shaft [B] and gear housing [C] where the differential gears rub.

★If they are scored, discolored, or otherwise damaged, replace them as a set.

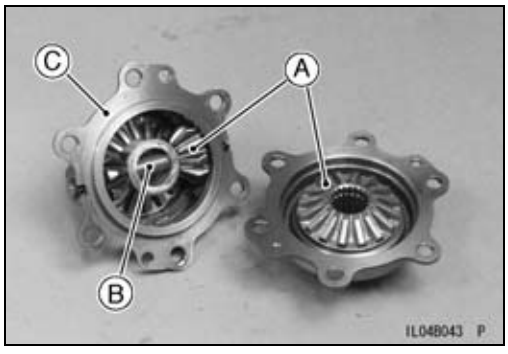

Ball Bearing Inspection

- Since the ball bearings are made to extremely close tolerances, the wear must be judged by feel rather than measurement. Clean each bearing in a high flash-point solvent, dry it (do not spin the bearing while it is dry), and oil it with engine oil.
- Spin [A] the bearing by hand to check its condition.

★If the bearing is noisy, does not spin smoothly, or has any rough spots, replace it.

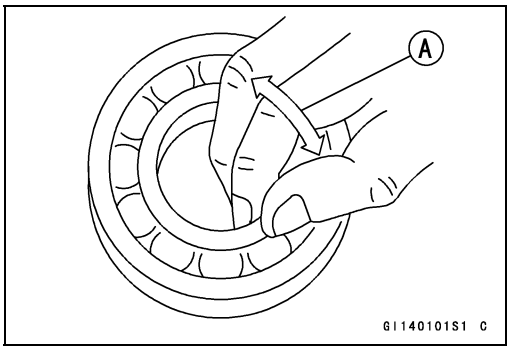

Oil Seal Inspection

- Visually inspect the oil seal.

★Replace it if the lips are misshapen, discolored (indicating that the rubber has deteriorated), hardened, or been otherwise damaged.

Bevel Gear Case (KAF400-A/C)

Driven Bevel Gear Removal

- Remove:
  Transmission Oil (drain, see Transmission Oil Change in the Periodic Maintenance chapter)
  Left Rear Wheel (see Wheels/Tires chapter)
  Rear Propeller Shaft (see Propeller Shaft Removal)
  Bolts [A] and Cable Bracket [B]
  2WD/4WD Shift Cable End [C]

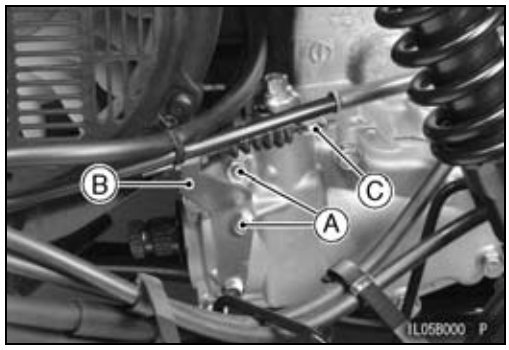

- Remove:
  Bevel Gear Case Bolts [A]
  Bevel Gear Case [B]

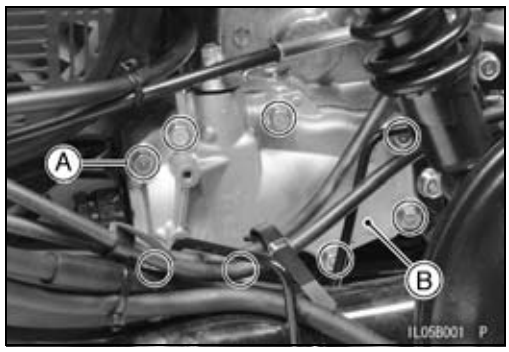

- Remove:
  Driven Bevel Gear Assembly [A]

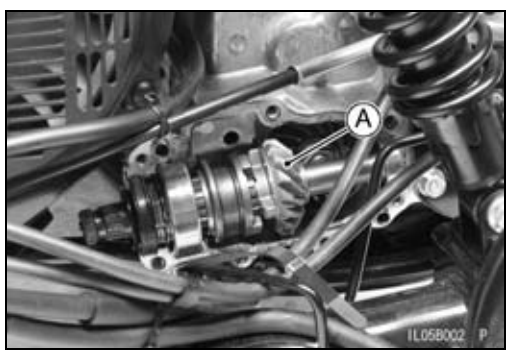

Driven Bevel Gear Installation

- Check and adjust the bevel gear backlash and tooth contact when any of the backlash-related parts are replaced (see Bevel Gear Adjustment).
- Check to see that the bevel gear case dowel pins [A] are in place.
- Insert the shift shaft pin in the groove of the sifter, and install the bevel gear case.

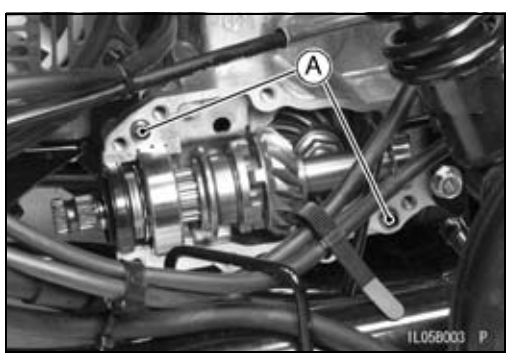

- Apply liquid gasket:
  Bevel Gear Case Mating Surface [A]

  Sealant - Liquid Gasket, TB1216B: 92104-1064

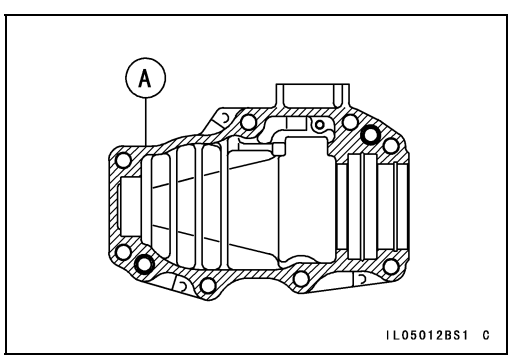

Bevel Gear Case (KAF400-A/C)

- Tighten the bevel gear case bolts to the specified by following the sequence numbers [1 ~ 8].

  Torque - Bevel Gear Case Bolts: 20 N·m (2.0 kgf·m, 14 ft·lb)

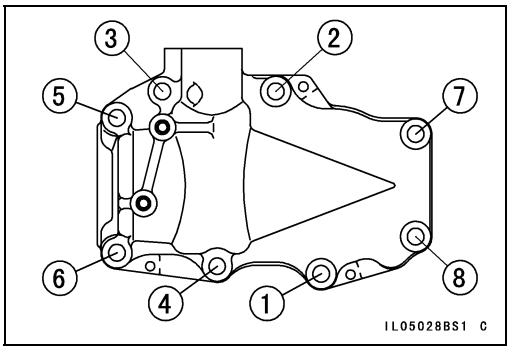

Driven Bevel Gear Disassembly

- Remove:
  Driven Bevel Gear Assembly (see Driven Bevel Gear Removal)
  Snap Ring [A]
  Oil Seal [B]

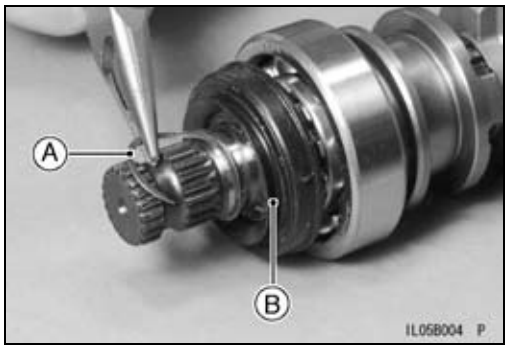

- Pry open the toothed washer tab [A] on the driven bevel gear slotted nut [B] with a small chisel.

- Unscrew the driven bevel gear slotted nut.

  Special Tools - Pinion Gear Holder, m1.0 [A]: 57001-1632
  Socket Wrench [B]: 57001-1283

- Remove:
  Driven Bevel Gear Slotted Nut
  Washer
  Toothed Washer
  Ball Bearing [C]
  Shifter [D]

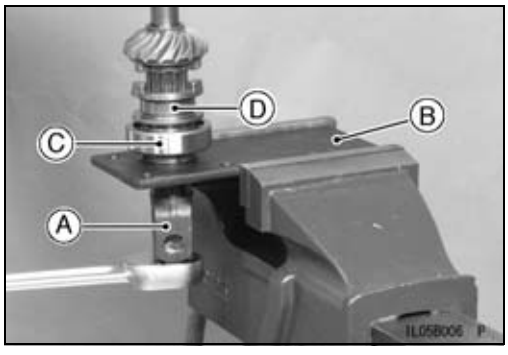

- Remove:
  Ball Bearing [A]
  Snap Ring [B]
  Collar [C]
  Driven Bevel Gear [D]

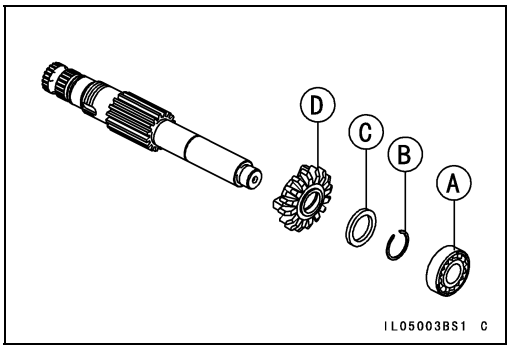

Bevel Gear Case (KAF400-A/C)

Driven Bevel Gear Assembly

● Install:
Ball Bearing [A]
Toothed Washer [B]
Washer [C]
Driven Bevel Gear Slotted Nut [D]

○Apply molybdenum disulfide oil to the seating surface of the driven bevel gear slotted nut, and tighten it.

Special Tools - Pinion Gear Holder, m1.0: 57001-1632
Socket Wrench: 57001-1283

Torque - Driven Bevel Gear Slotted Nut: 118 N·m (12 kgf·m, 87 ft·lb)

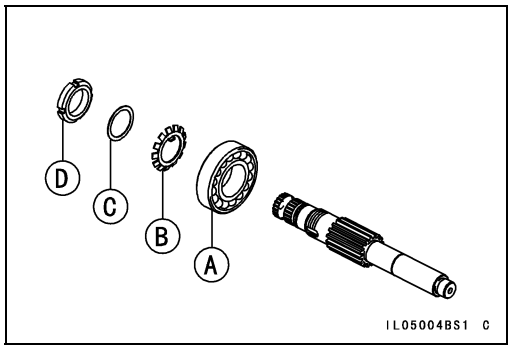

● Bend the tab [A] of toothed washer over the slotted nut [B].

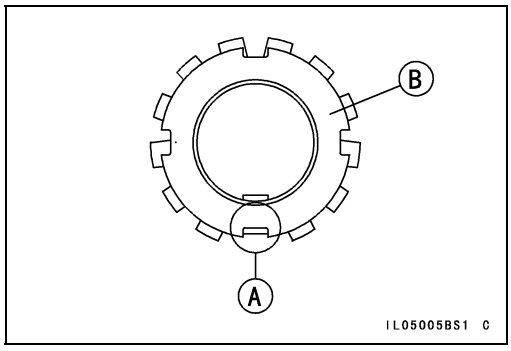

● Install:
Shifter [A]
Driven Bevel Gear [B]
Collar [C]

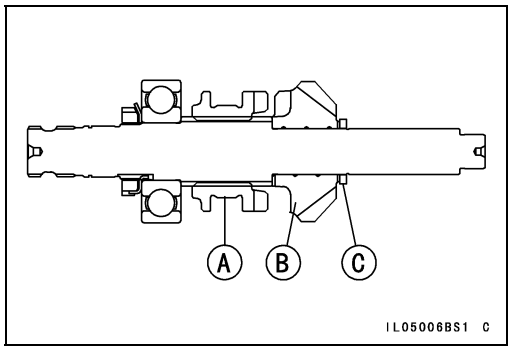

● Install:
Snap Ring [A]

Special Tool - Snap Ring Guide, ϕ20 [B]: 57001-1633

○Install the snap ring on the snap ring guide.

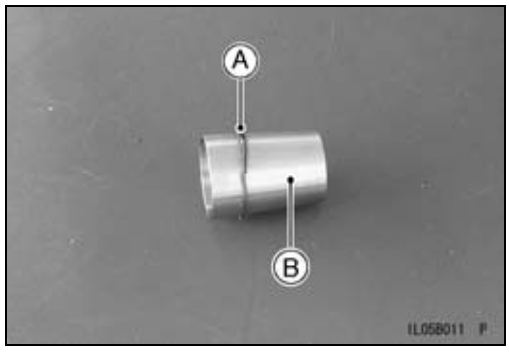

Bevel Gear Case (KAF400-A/C)

○Cover the snap ring guide [A] on the driven bevel gear shaft [B], and slide the snap ring [C] on the shaft.
○Using the pipe [D] (special tool), push the snap ring in the groove [E] of the shaft.

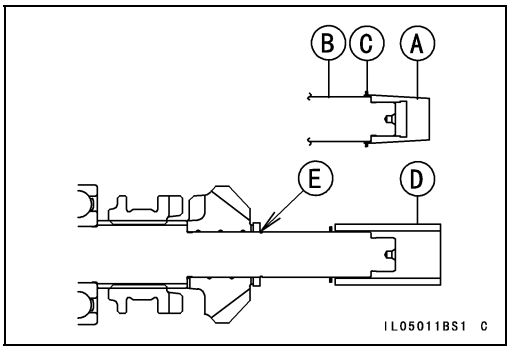

● Install:
Ball Bearing [A]

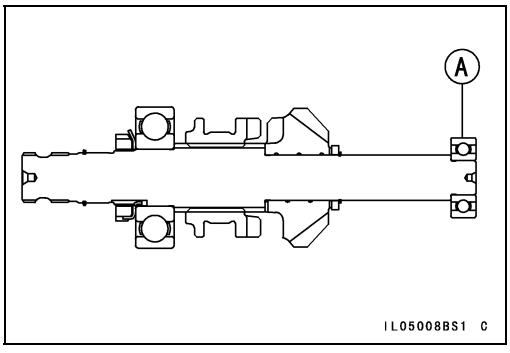

● Apply grease to the oil seal lip, and install it.
● Install:
Snap Ring [A]

Special Tool - Snap Ring Guide, ϕ22 : 57001-1634

○Install the snap ring on the cap [B] of the snap ring guide.

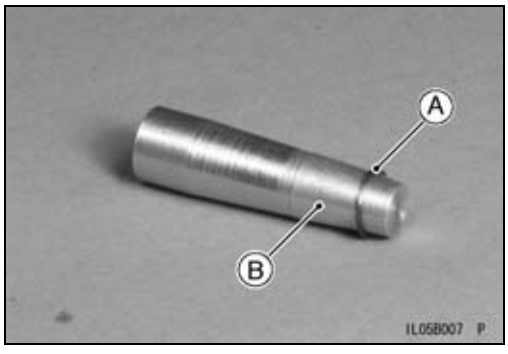

○Slide the snap ring [A] until the ring gets to the body [B] of the snap ring guide.
○Remove the cap from the body.

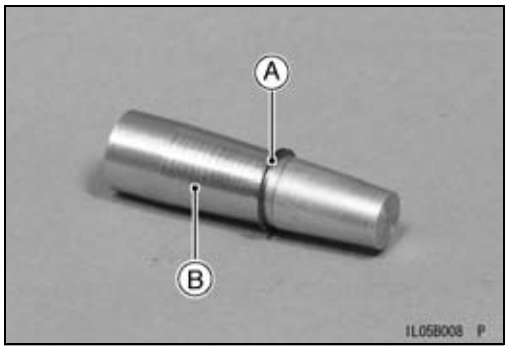

○Cover the body [A] on the driven bevel gear shaft, and insert the snap ring [B] in the groove [C] of the shaft.

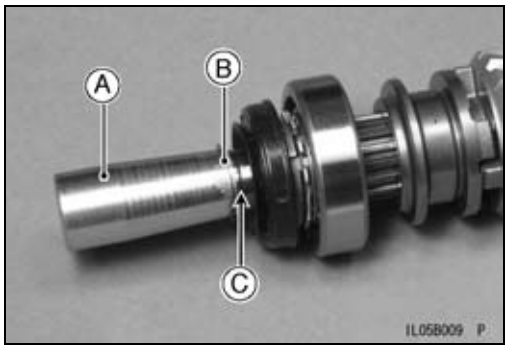

Bevel Gear Case (KAF400-A/C)

Drive Bevel Gear Removal

- Remove:
  Driven Bevel Gear Assembly (Driven Bevel Gear Removal)
- Remove:
  Rear Brake Panels (see Brakes chapter)
  Rear Shock Absorbers (see Suspension chapter)
  Left Rear Axle Bracket and Axle Shaft (see Rear Axle Removal)
- Install:
  Bevel Gear Holder [A]

  Special Tool - Bevel Gear Holder: 57001-1638
- Set the “Differential Lock” position.
- Remove:
  Drive Bevel Gear Nut [B]
  Washer
  Drive Bevel Gear [C]
  Shim

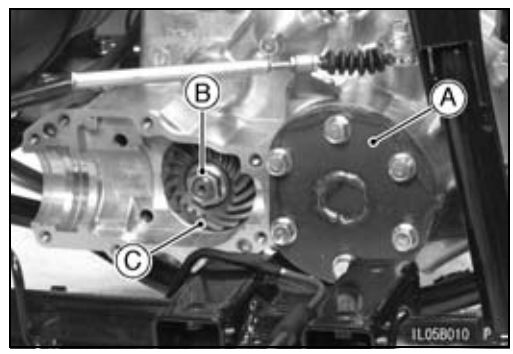

Drive Bevel Gear Installation

- Check and adjust the bevel gear backlash when any of the backlash-related parts are replaced (see Bevel Gear Adjustment).
- Install:
  Shim [A] (for Gear Backlash)
  Drive Bevel Gear [B]
  Washer [C] (take care the direction)
- Apply molybdenum disulfide grease to the threads and seating surface of new drive bevel gear nut [D].
- Face caulking side [E] to outward.
- Tighten:

  Special Tool - Bevel Gear Holder: 57001-1638

  Torque - Drive Bevel Gear Nut: 137 N·m (14 kgf·m, 101 ft·lb)

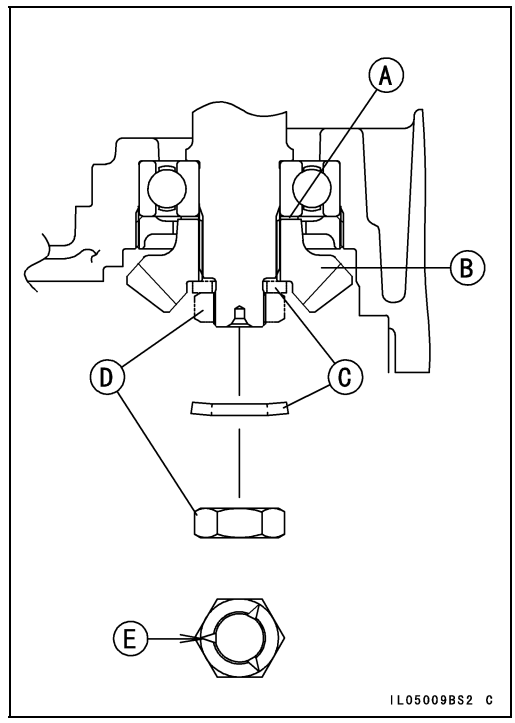

Bevel Gear Adjustment

In order to prevent one gear from moving away from the other gear under load, the **backlash** of the bevel gears must be correct to prevent the gears from making noise and being damaged.

When replacing any one of the backlash-related parts, be sure to check and adjust the backlash. Adjust the backlash by replacing shims.

This adjustment is of critical importance and must be carried out in the correct sequence, using the procedures shown.

Bevel Gear Case (KAF400-A/C)

Backlash Adjustment

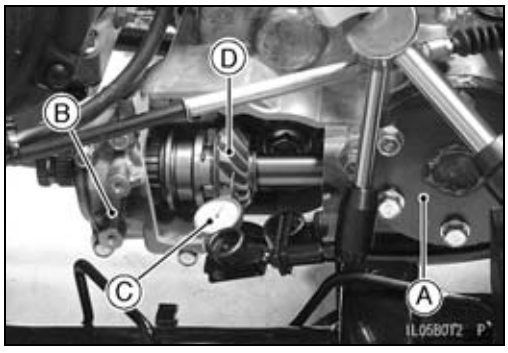

- Check and adjust the gear backlash when any of the backlash-related parts are replaced with new ones.
- Install:
  Bevel Gear Holder [A] (see Drive Bevel Gear Removal)

  Special Tool - Bevel Gear Holder: 57001-1638
- Clean any dirt and oil off the bevel gear teeth.
- Install:
  Drive Bevel Gear (see Drive Bevel Gear Installation)
  Driven Bevel Gear (see Driven Bevel Gear Installation)
  Bevel Gear Holder [B]

  Special Tool - Bevel Gear Holder: 57001-1639
- Tighten:

  Torque - Bevel Gear Case Bolts: 20 N·m (2.0 kgf·m, 14 ft·lb)
- Set up a dial gauge [C] against one of the teeth in the bevel gear [D].
- To measure the backlash, while pushing the driven gear shaft to rearward and turn the shaft clockwise and counterclockwise while holding the drive bevel gear steady with the bevel gear holder. The difference between the highest and lowest gauge readings is the amount of backlash.

★If the backlash is not within the limit, replace the shim(s) at the drive gear. To increase backlash, decrease the thickness of the shim(s). To decrease backlash, increase the thickness of the shim(s).

★Change the thickness a little at a time.

- Recheck the backlash, and readjust as necessary.

Bevel Gear Backlash

Standard:	**0.35 ~ 0.50 mm (0.0138 ~ 0.0197 in.)**
	(at driven bevel gear tooth)

Bevel Gear Case (KAF400-A/C)

Bevel Gear Case (Backlash-Related Parts)

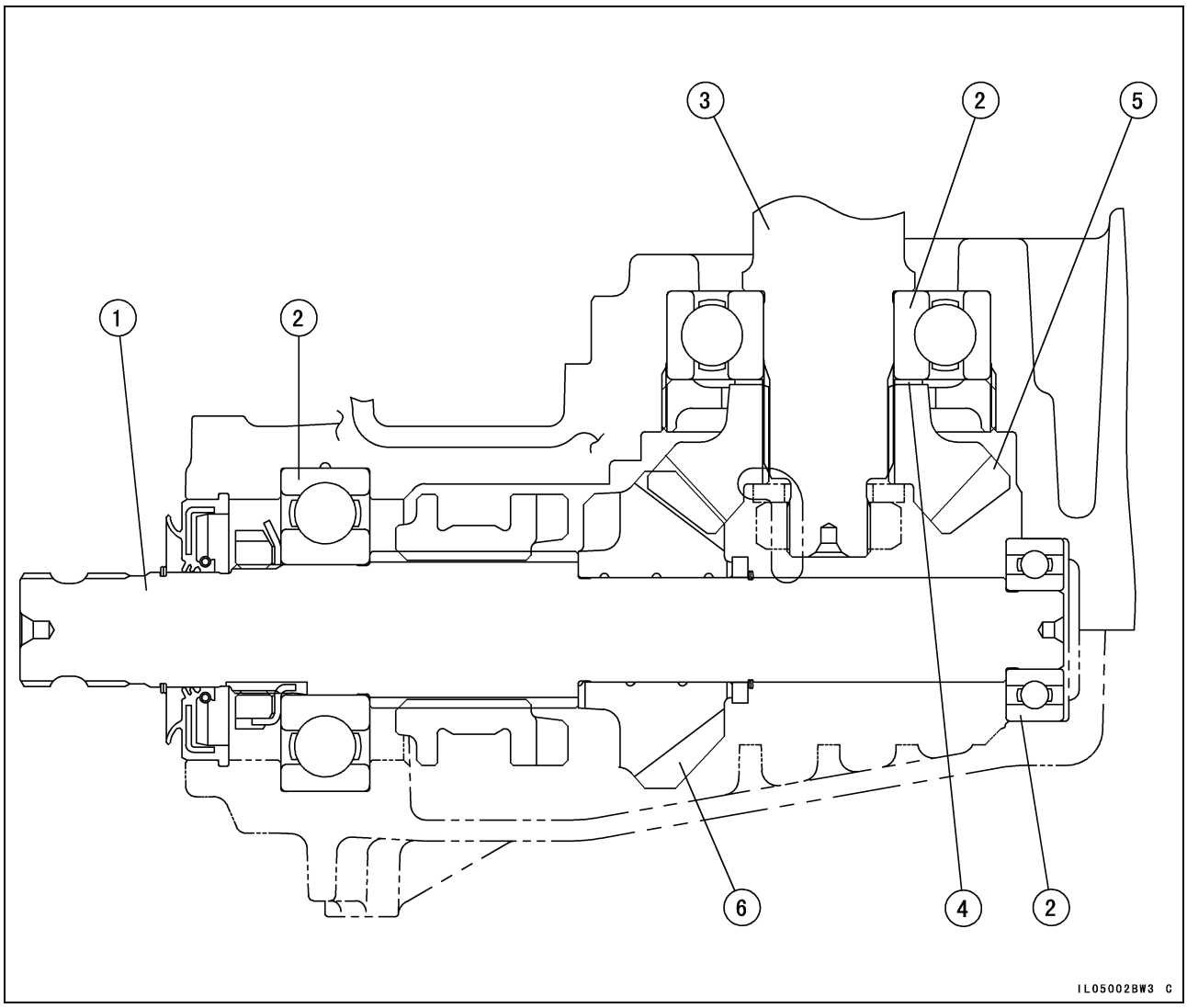

1. Driven Gear Shaft
2. Ball Bearings
3. Drive Gear Shaft
4. Drive Gear Shim(s)
5. Drive Bevel Gear
6. Driven Bevel Gear

Drive Gear Shims [4]

Thickness	Part Number
0.15 mm (0.0059 in.)	92025-1688
0.5 mm (0.0197 in.)	92025-1689
0.6 mm (0.0236 in.)	92025-1690
0.7 mm (0.028 in.)	92025-1691
0.8 mm (0.031 in.)	92025-1692
0.9 mm (0.035 in.)	92025-1693
1.0 mm (0.0039 in.)	92025-1694
1.1 mm (0.0043 in.)	92025-1695
1.2 mm (0.0047 in.)	92025-1696

Bevel Gear Case (KAF400-A/C)

Bevel Gear Inspection

- Visually check the drive bevel gear [A] and the driven bevel gear [B] for scoring, chipping, or other damage.

★Replace the bevel gears as a set if either gear is damaged.

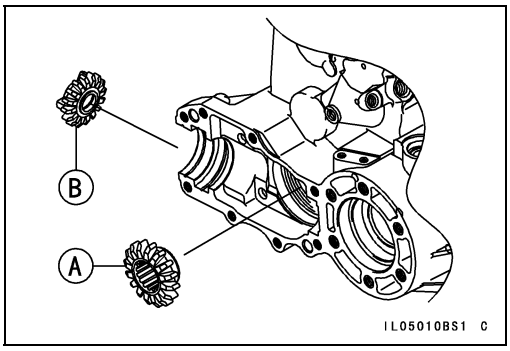

Ball Bearing/Oil Seal Inspection

- Since the ball bearings are made to extremely close tolerances, the wear must be judged by feel rather than measurement. Clean each bearing in a high flash-point solvent, dry it (do not spin the bearing while it is dry), and oil it with engine oil.
- Spin [A] the bearing by hand to check its condition.

★If the bearing is noisy, does not spin smoothly, or has any rough spots, replace it.

- Inspect the oil seals.

★Replace it if the lips are misshapen, discolored (indicating that the rubber has deteriorated), hardened, or been otherwise damaged.

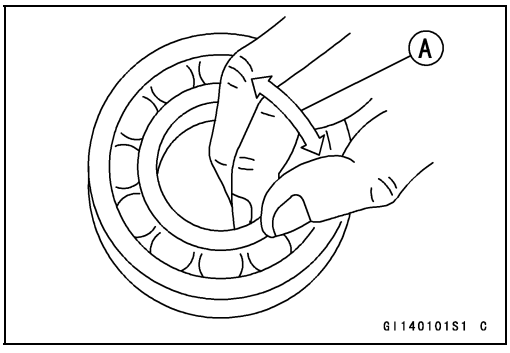

Propeller Shafts (KAF400-A/C)

Front Propeller Shaft Removal

- Remove:
  Front Final Gear Case Guard (see Frame chapter)
  Bottom Guard (see Frame chapter)
- Slide the rubber boot [A] forward.
- Push the universal joint [B] forward [C], and remove the rear end from the bearing housing.

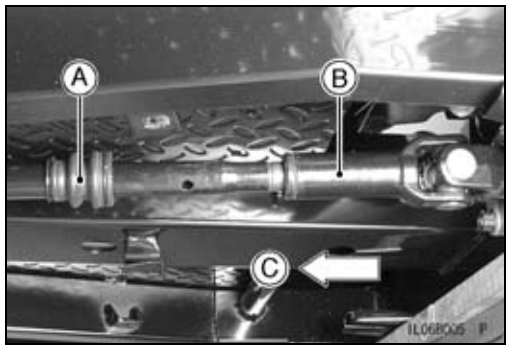

- Push the rear universal joint [A] forward fully, and remove the front propeller shaft [B] from the front universal joint.

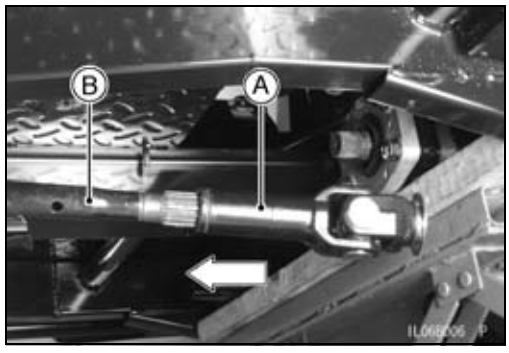

Front Propeller Shaft Installation

- When installing the cover [A], press the cover so that the cover surface is flush with the end of the yoke end.

○Does not scratch the contact surface [B] of the oil seal.

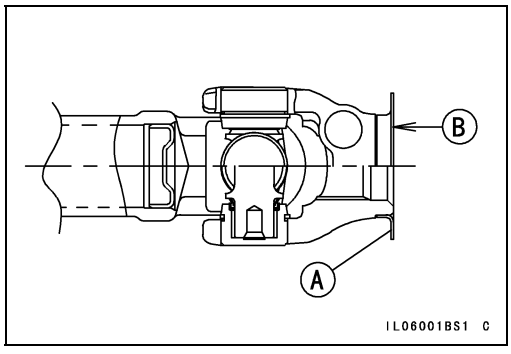

Propeller Shafts (KAF400-A/C)

- Insert the propeller shaft [A] through the hole of the frame [B].
- Apply molybdenum disulfide grease to the spline [C] of the propeller shaft.
- Apply grease to the oil seal lip [D].
- Install:
  O-rings [E]
  Boot [F]
  Spring [G]
  Rear Universal Joint [H]

○Refer to “Propeller Shafts Assembly” for universal joint installation.

- Insert the propeller shaft into the front universal joint [I].
- Push the rear universal joint forward fully, and install the propeller shaft rear end [J] on the bearing housing [K].
- Install the O-rings [L] on the rubber boot.

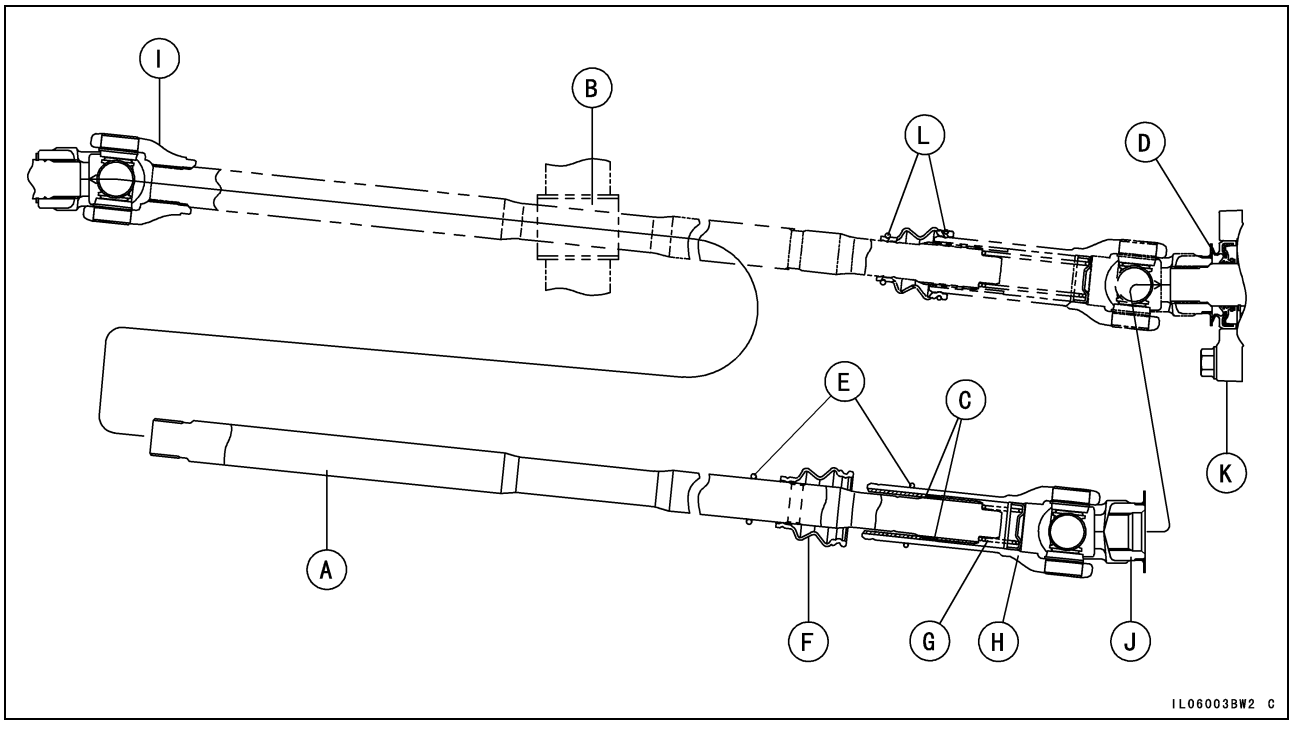

Propeller Shafts (KAF400-A/C)

Propeller Shafts Assembly

- Install the each yokes [A] as the figure below.
  Front Propeller Shaft [B]
  Bearing Housing [C]
  Rear Propeller Shaft [D]

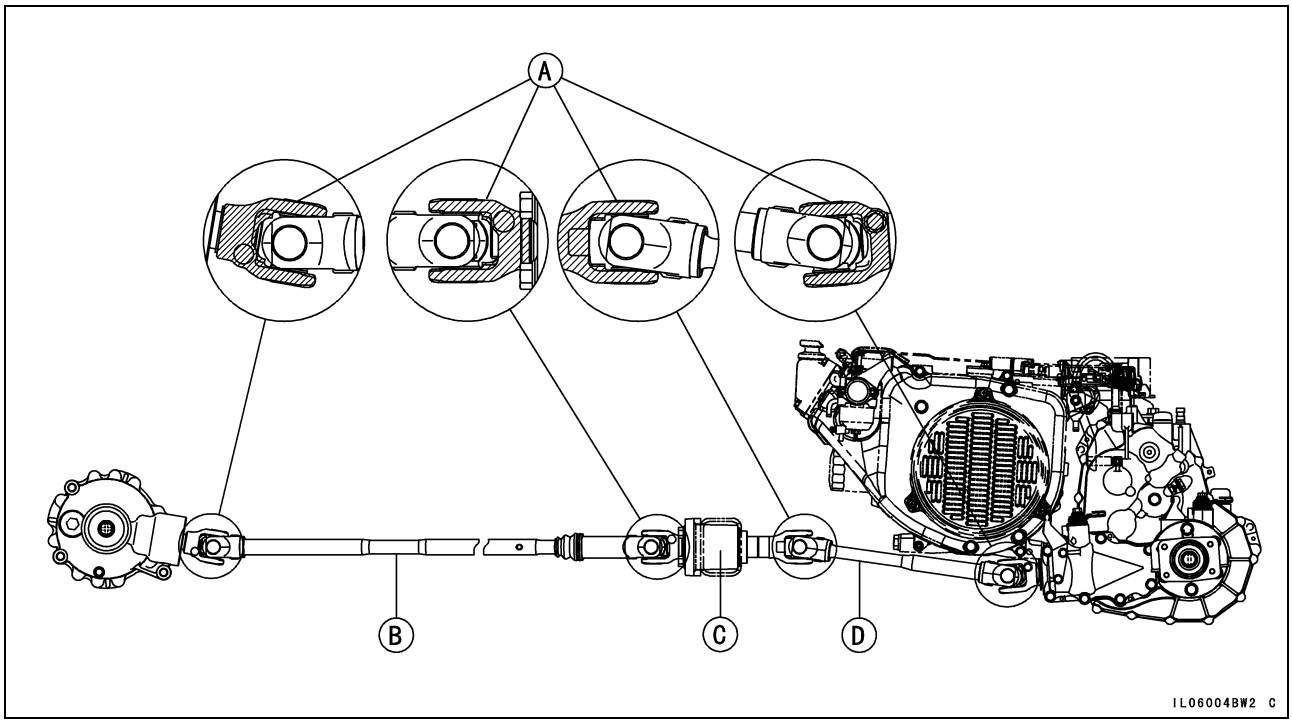

Rear Propeller Shaft Removal

- Remove:
  Bottom Guard (see Frame chapter)
  Front Propeller Shaft (see Front Propeller Shaft Removal)
- Loosen the bearing housing bolts [A] as shown.

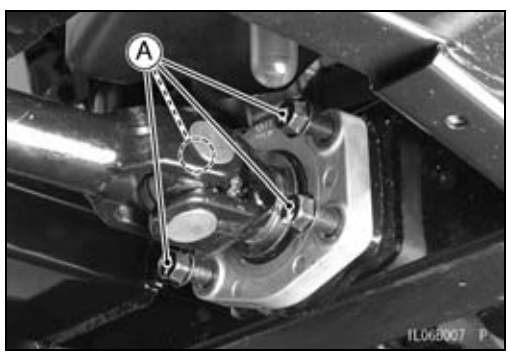

- Remove:
  Yoke Stop Bolt [A]

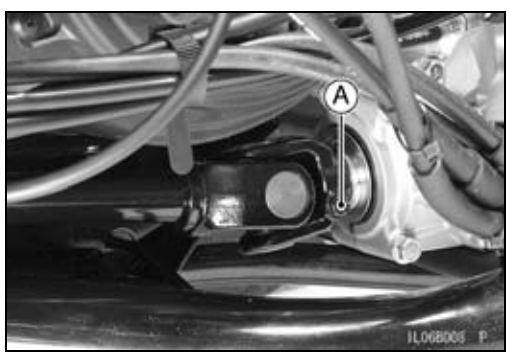

Propeller Shafts (KAF400-A/C)

- Push the universal joint [A] forward fully, and remove the rear end from the bevel gear shaft [B].
- Remove:
  Rear Propeller Shaft [C]

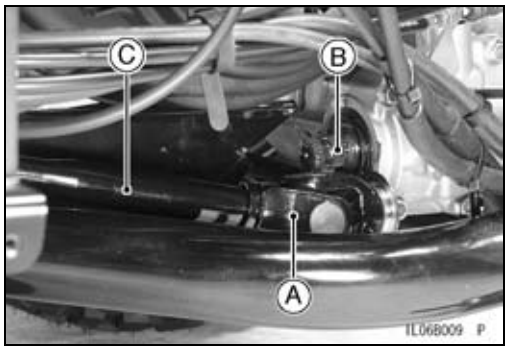

Rear Propeller Shaft Installation

- Replace the yoke stop nut with a new one.
- When installing the cover [A], press the cover so that the distance between the cover surface and yoke end [B] is specified length [C] as sown.
  [C] 0.9 ~ 1.3 mm (0.012 ~ 0.051 in.)

○Does not scratch the contact surface [D] of the oil seal.

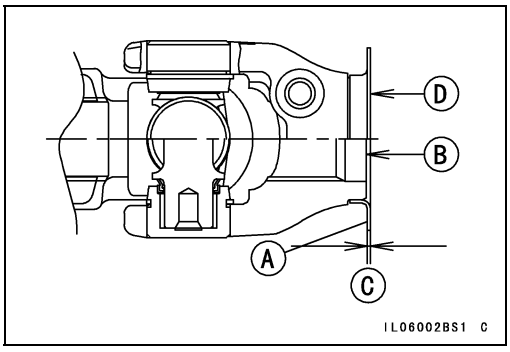

- Apply molybdenum disulfide grease to the oil seal lip [A] and spline [B] of the bearing housing [C].
- Install:
  Spring [D]
- Insert the front universal joint [E] into the bearing housing.

○Refer to “Propeller Shafts Assembly” in the Front Propeller Shaft Installation for universal joint installation.

- Push the propeller shaft [F] forward fully, and install the rear universal joint [G] on the bevel gear shaft [H].
- Tighten:

Torque - Yoke Stop Bolt [I]: 8.8 N·m (0.90 kgf·m, 78 in·lb)
Bearing Housing Bolts [J]: 42 N·m (4.2 kgf·m, 31 ft·lb

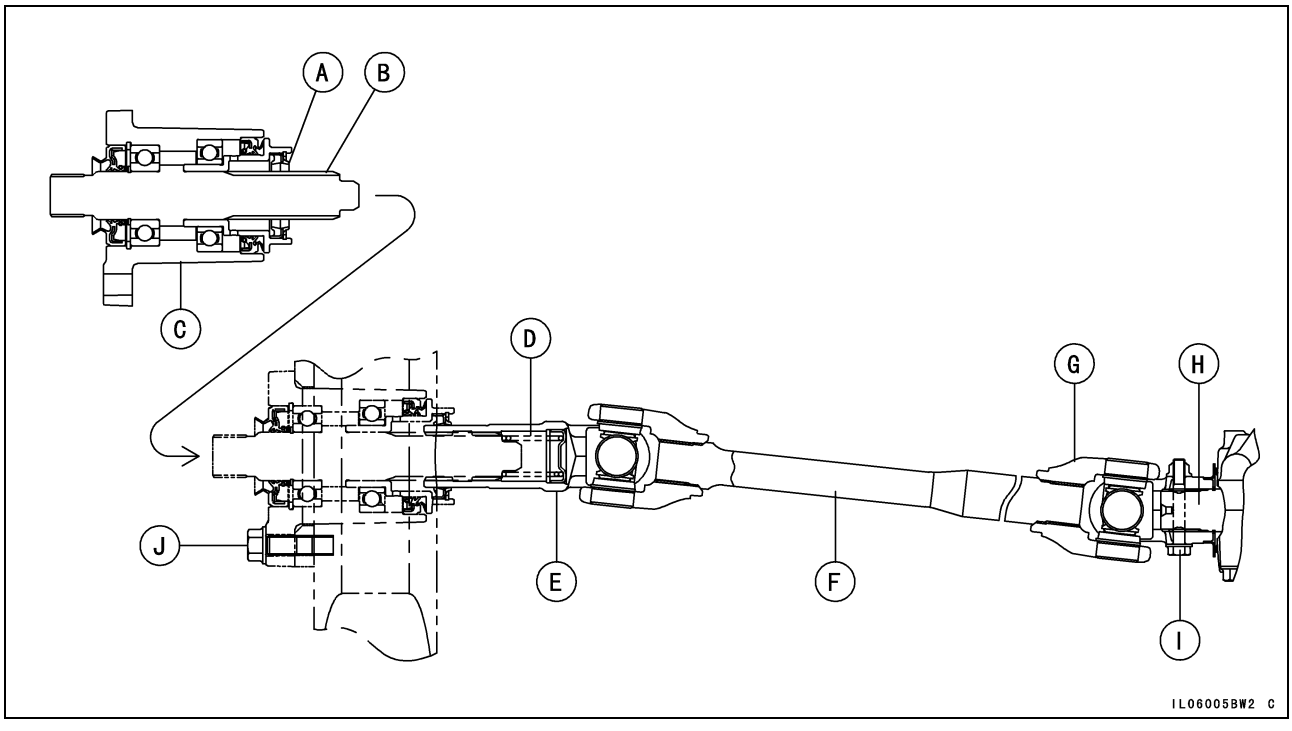

Propeller Shafts (KAF400-A/C)

Propeller Shaft Inspection

- Visually inspect the splines of the propeller shafts.

★If they are twisted, badly worn, or chipped, replace the shafts.

- Check that the universal joint works smoothly without rattling or sticking.

★If it does not, the bearings of the joint are damaged. Replace the propeller shaft with a new one.

Axles

Front Axle Removal (KAF400-A/C)

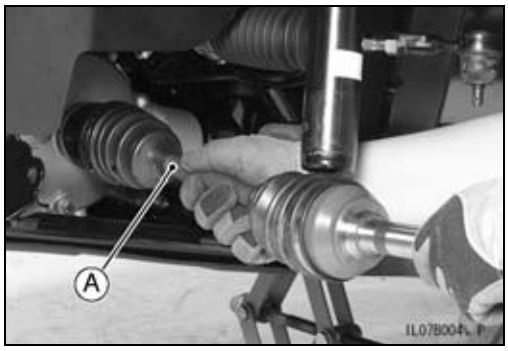

- Remove:
  Front Suspension Arm and Steering Knuckle (see Suspension chapter)
  Front Axle [A]

○Pull the axle straight.

Front Axle Installation (KAF400-A/C)

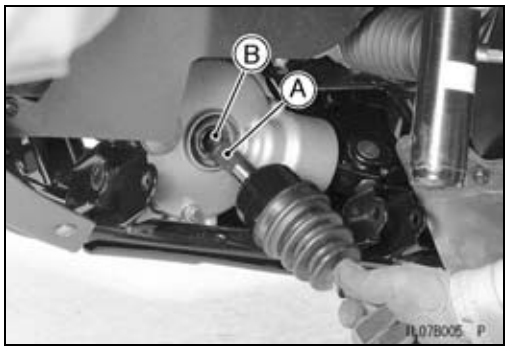

- Wipe the old grease off the splines [A] of the axle and cap oil seal [B].
- Visually inspect the splines of the axle.

★If they are badly worn or chipped, replace the axle with a new one.

- Apply molybdenum disulfide grease to the axle splines and oil seal.
- Insert the axle and tap the end of the axle lightly, and install the axle.

NOTE

○*The axle shaft must not come off easily.*

Front Axle Removal (KAF400-B)

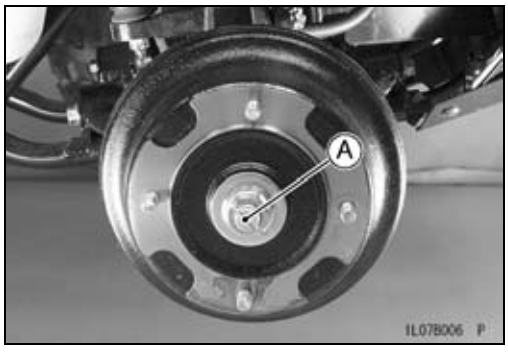

- Remove:
  Front Wheel (see Wheels/Tires chapter)
  Cotter Pin [A]

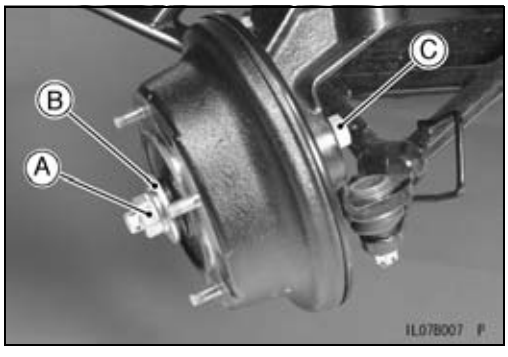

- Remove:
  Axle Nut [A]
  Washer [B]
  Front Axle [C]

Front Axle Installation (KAF400-B)

- Tighten:

Torque - Front Axle Nuts: 147 N·m (15 kgf·m, 108 ft·lb)

Axles

Rear Axle Removal

- Refer to Transmission Case Removal in the Transmission chapter for rear axle removal.
  [A] Rear Right Axle
  [B] Rear Left Axle

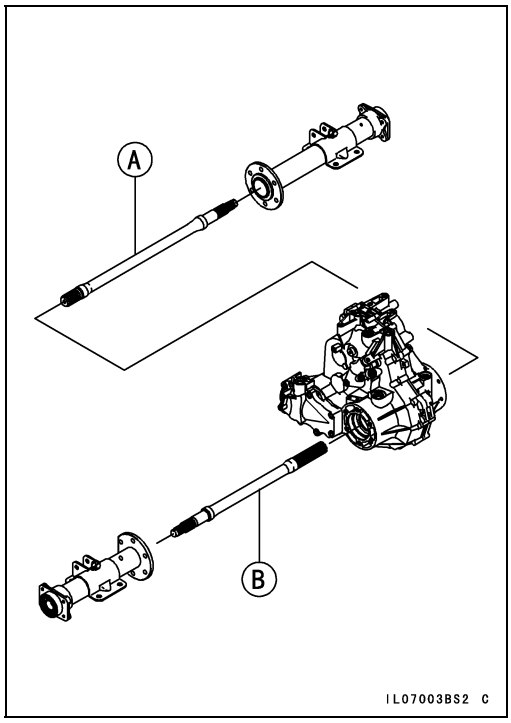

Rear Axle Installation

- Refer to Transmission Case Installation in the Transmission chapter for rear axle installation.
- Adjust:
  Transmission Oil (see Transmission Oil Change in the Periodic Maintenance chapter)

Axle Inspection

- Visually inspect the splines of the axle.

★If they are twisted, badly worn, or chipped, replace the axle with a new one.

- Check that the ball joint works smoothly without rattling or sticking.

★If it does not, the bearings of the joint are damaged. Replace the front axle with a new one.

Dust Boot Inspection (KAF400-A/C)

- Visually inspect the boots [A] if the front axles are noisy during operation.

★If the dust boot is torn, worn, or deteriorated, replace it.

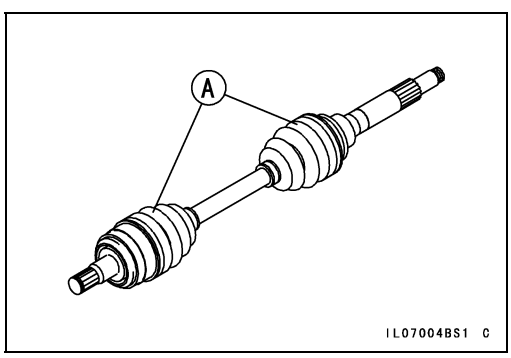

Axles

Front Axle Joint Boot Replacement (KAF400-A/C)

Outboard Joint Boot Removal

- Remove:
  Front Axle (see Front Axle Removal)
  Boot Bands [A]
- Scrap the removed boot bands.
- Slide the joint boot [B] toward the inboard joint.

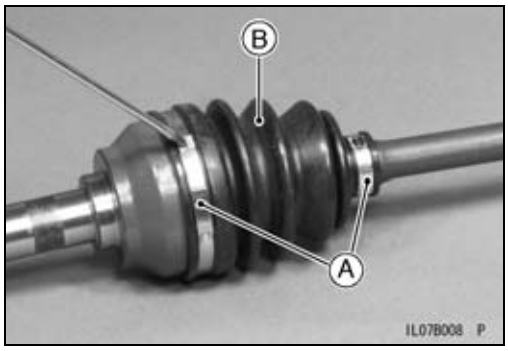

- Tap the bearing housing [A] straight [B] with a plastic hammer to separate it from the shaft.

NOTICE
Do not tap on the cage. Be careful not get hurt when the housing comes out. If the splined portion of shaft cracked or damaged during disassembling of outboard joint, do not reuse the shaft.

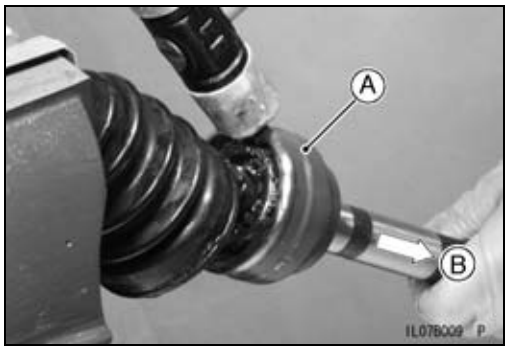

- Remove:
  Circlip [A]
  Boot [B]
  Small Band [C]

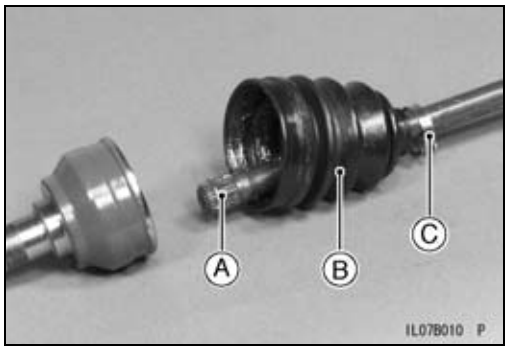

Outboard Joint Boot Installation

- Clean the axle shaft by wiping off the used grease on it.
- Wind the tape on the splines of the axle shaft in order to protect the joint boot.
- Install:
  New Small Band [A]
  New Boot [B]

○Apply the special grease slightly on the inside of the new boot small diameter, and install the boot on the axle shaft.

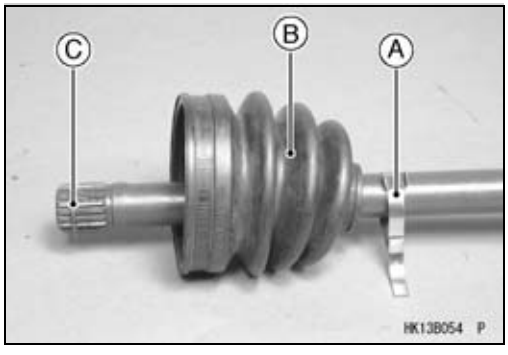

NOTICE
Only the special grease that is included with the boot kit can be applied to the boots.

- Install:
  New Circlip [C]

Axles

- Apply the special grease slightly on the part [A] of the band installation in order to make easy to install the boot band.
- Tighten the small boot band [B].

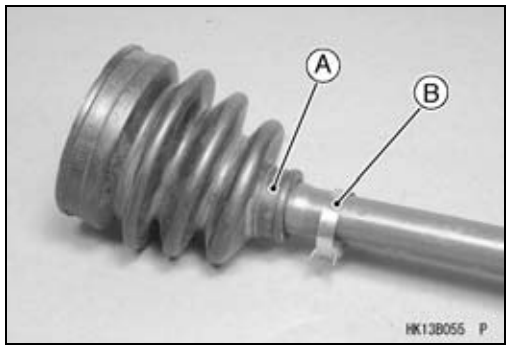

○Tighten the boot band [A] and bend the tangs [B] securely to hold down the end of the band.

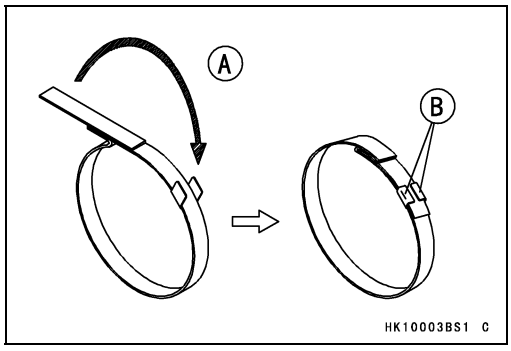

- Place the special grease tube nozzle in the bore of the housing and squeeze the tube [A] until the grease comes out from the joint bearing.

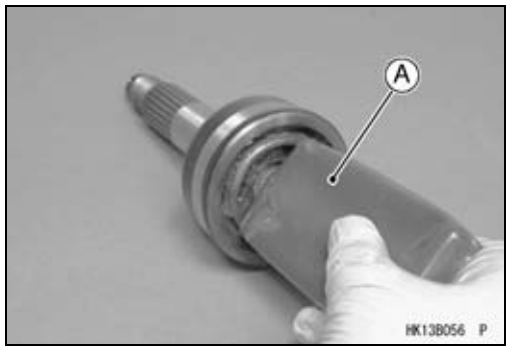

- Tap the shaft end [A] straight with a plastic hammer until it is locked by the circlip.

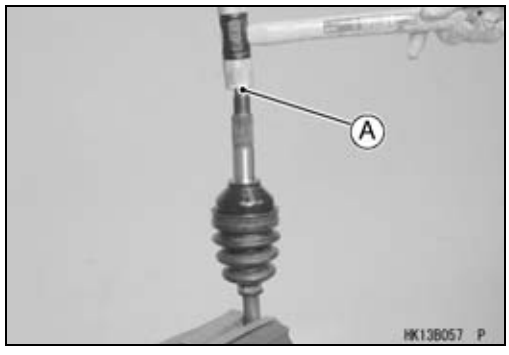

- Squeeze all of the special grease [A] into the new boot [B], and slide the boot onto the outboard joint [C].

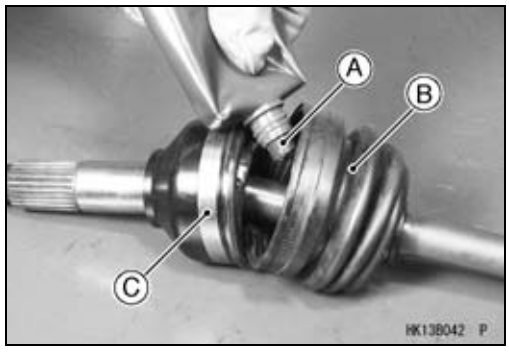

Axles

- Compress the axle assembly to the specified length while relieving the air pressure inside the inboard boot.
- Hold the axle at this setting.

Standard Length of Assembling:
Outboard: 273.7 mm (10.78 in.) [A]

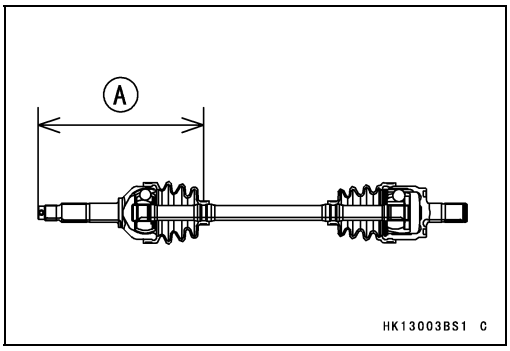

- Open the edge of the boot in order to equalize the air pressures.
- Tighten the large band [A] and bend the tangs securely to hold down the end of the band.

Maximum Outside Diameter of Band: 80.2 mm (3.16 in.)
(After tightening the outside diameter)

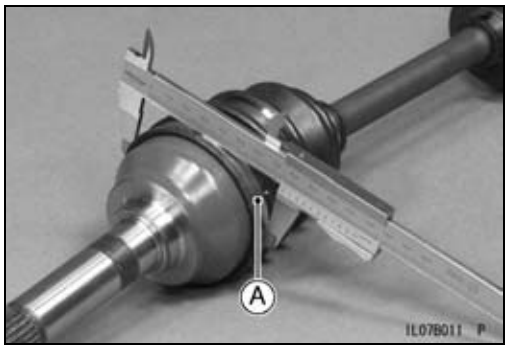

- While the band is held at the diameter above, tap down the tangs [A] of the band.

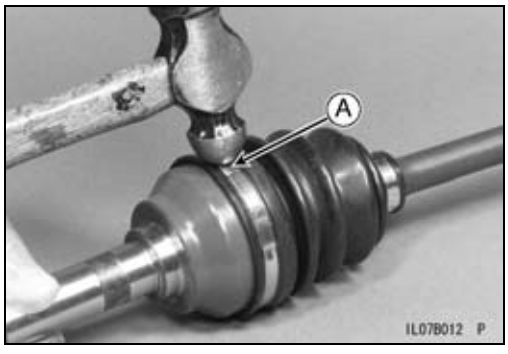

Inboard Joint Boot Removal

- Remove:
  Front Axle (see Front Axle Removal)
  Boot Bands [A]
- Scrap the removed boot bands.
- Slide the joint boot [B] toward the outboard joint.

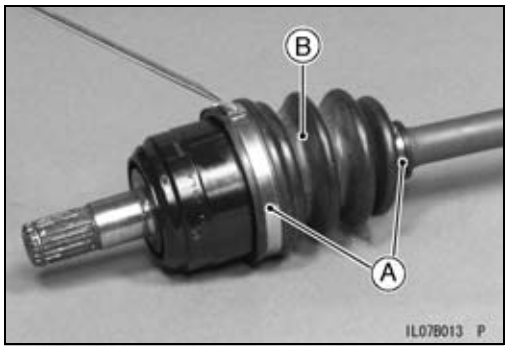

- Remove the retaining ring [A].
- Separate to the axle shaft.

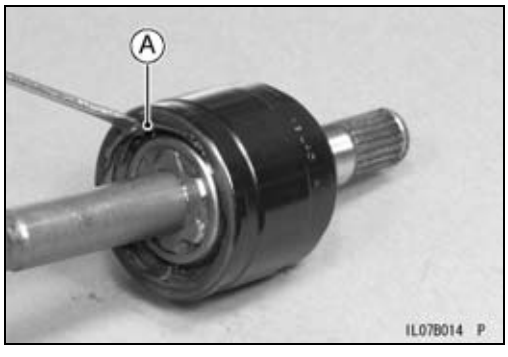

Axles

- Remove the steel balls [A].
- Slide the cage [B] toward the outboard joint.

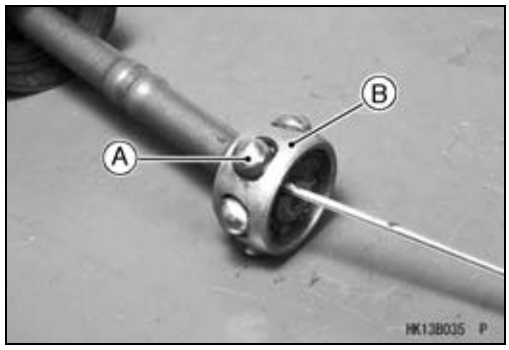

- Remove:
  Circlip [A]

  Special Tool - Outside Circlip Pliers [B]: 57001-144

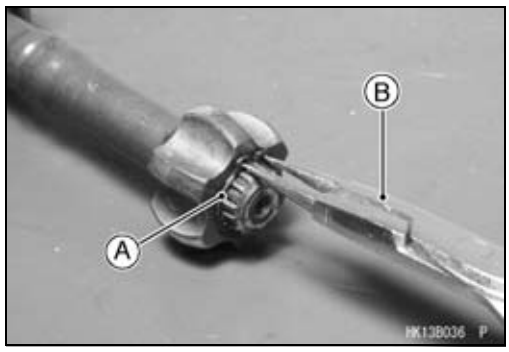

- Remove:
  Inner Race [A]
  Cage [B]
  Inboard Joint Boot [C]
  Boot Band [D]

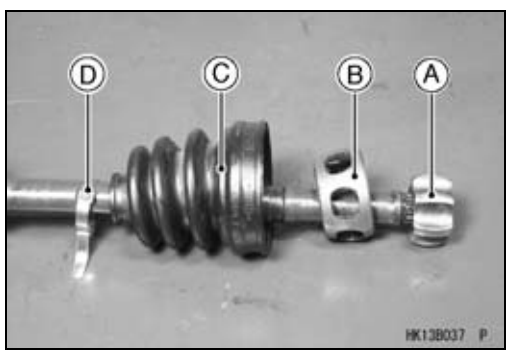

Inboard Joint Boot Installation

- Install:
  New Small Band [A]
  New Inboard Joint Boot [B]
  Cage [C]

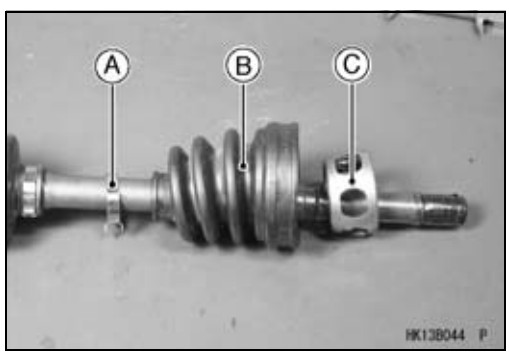

- Install the inner race [A] so that the flat side [B] faces outboard joint.

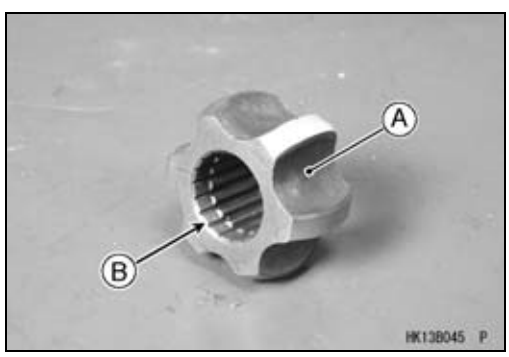

Axles

- Install:
  Circlip [A]

  Special Tool - Outside Circlip Pliers: 57001-144
- Slide the cage [B] on the inner race and install the steel balls [C].

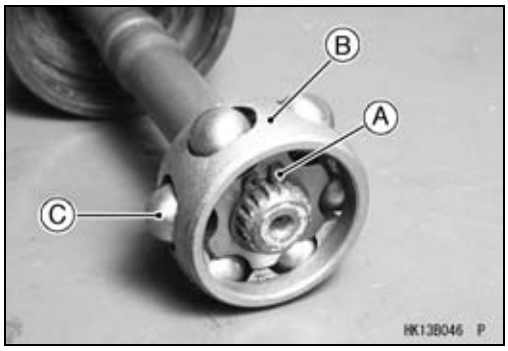

- Apply the special grease [A] to the steel balls and cage.

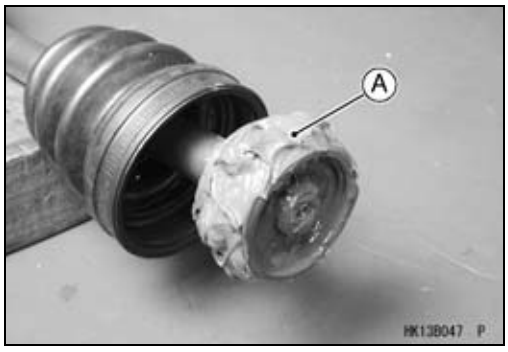

- Squeeze about half a tube (30 grams) of the special grease [A] into the bearing cup [B].

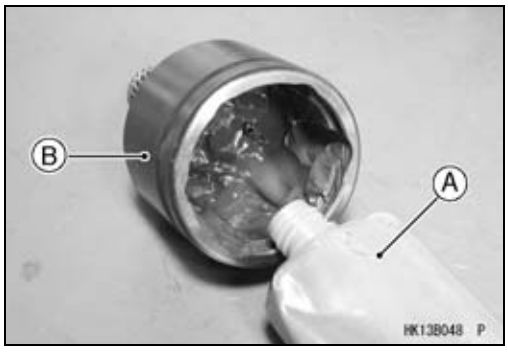

- Insert the balls and cage assembly in the bearing cup strongly.
- Install the new retaining ring [A] so that the opening [B] is aligned with one of the projections [C].

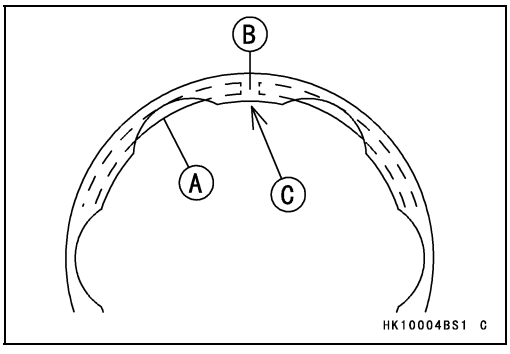

Axles

- Tighten the small band.
- Squeeze the remaining special grease [A] into the inboard joint boot [B].

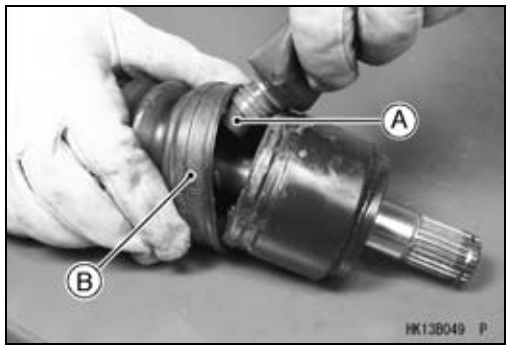

- Compress the axle assembly to the specified length while relieving the air pressure inside the inboard boot.
- Hold the axle at this setting.

Standard Length of Assembling:
Inboard: 173.5 mm (6.83 in.) [A]

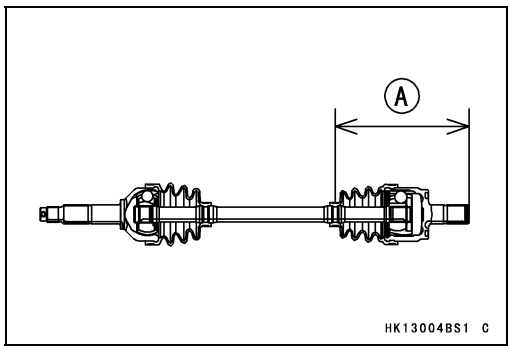

- Open the edge of the boot in order to eqalize the air pressures.
- Tighten the large band [A].

○Assemble it the same as the outboard joint boot, noting this setting;

Maximum Outside Diameter of Band: 75.7 mm (2.98 in.)
(After tightening the outside diameter)

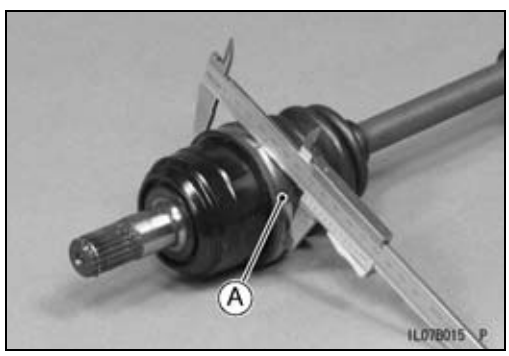

- While the band is held at the diameter above, tap down the tangs [A] of the band.

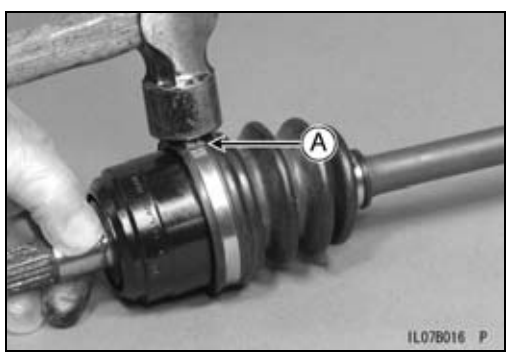

Ball Bearing Inspection

- Since the ball bearings are made to extremely close tolerances, the wear must be judged by feel rather than measurement. Clean each bearing in a high flash-point solvent, dry it (do not spin the bearing while it is dry), and oil it with engine oil.
- Spin [A] the bearing by hand to check its condition.

★If the bearing is noisy, does not spin smoothly, or has any rough spots, replace it.

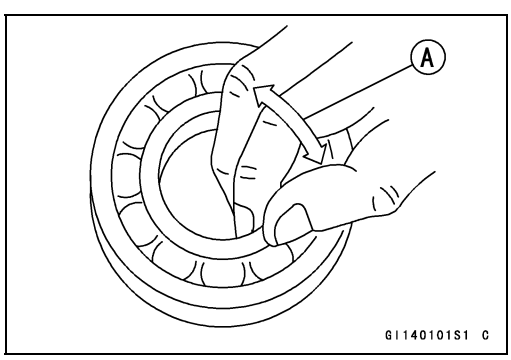

Axles

Grease Seal Inspection

- Visually inspect the grease seals.

★Replace if the lips are misshapen, discolored (indicating that the rubber has deteriorated), hardened, or been otherwise damage.

Brakes

Table of Contents

Exploded View 12-2
Specifications 12-6
Special Tools 12-7
Brake Fluid 12-8
- Brake Fluid Recommendation 12-8
- Brake Fluid Level Inspection 12-8
- Brake Fluid Change 12-8
- Brake Line Air Bleeding 12-8

Brake Pedal and Master Cylinder 12-10
- Brake Pedal Play Inspection 12-10
- Master Cylinder Removal 12-10
- Master Cylinder Installation 12-10
- Master Cylinder Disassembly/Assembly 12-10
- Master Cylinder Inspection 12-11

Brake Hoses and Pipes 12-12
- Brake Hose and Pipe Inspection 12-12
- Brake Hose and Pipe Replacement 12-12

Brake Drums 12-13
- Brake Drum Removal 12-13
- Brake Drum Installation 12-13
- Brake Drum Wear Inspection 12-13

Brake Panel Assemblies 12-14
- Brake Panel Assy Removal 12-14
- Brake Panel Assy Installation 12-14
- Brake Panel Disassembly 12-15
- Brake Panel Assembly 12-17
- Wheel Cylinder Removal/Installation 12-19
- Wheel Cylinder Assembly 12-19
- Wheel Cylinder Inspection 12-19
- Brake Shoe Lining Wear Inspection 12-19
- Brake Shoe Spring Inspection 12-20
- Grease Seal Replacement (KAF400-A/C) 12-20

Parking Brake Lever and Cables 12-21
- Parking Brake Lever Travel Adjustment 12-21
- Parking Brake Cable Lubrication/Inspection 12-21
- Parking Brake Lever Removal 12-21
- Parking Brake Lever Installation 12-21

Exploded View

Front Brake

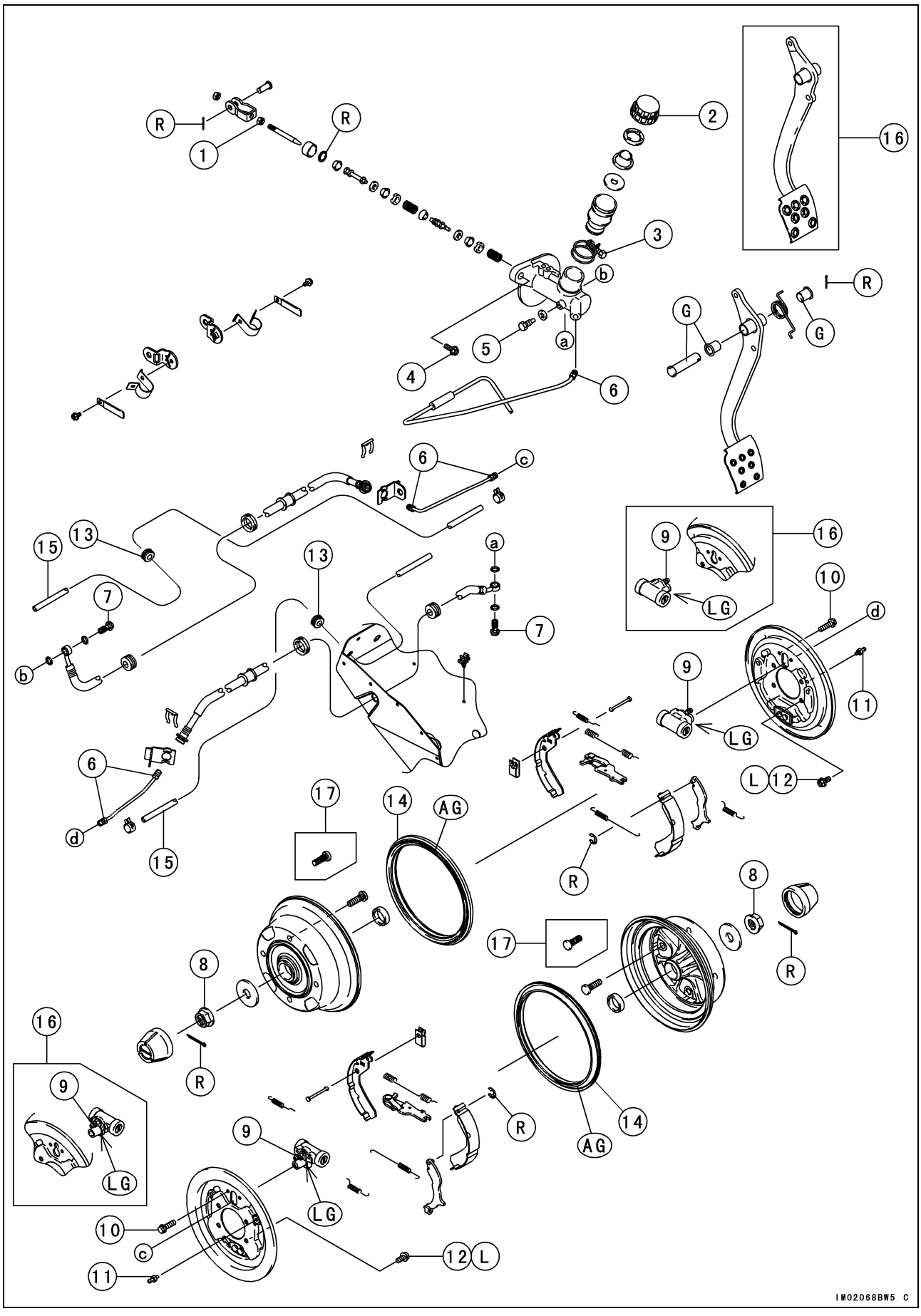

Exploded View

No.	Fastener	Torque			Remarks
		N·m	kgf·m	ft·lb	
1	Push Rod Locknut	18	1.8	13	
2	Master Cylinder Reservoir Cap	3.4	0.35	30 in·lb	
3	Reservoir Clamp Bolt	6.2	0.63	55 in·lb	
4	Master Cylinder Mounting Bolts	25	2.5	18	
5	Piston Stop Bolt	8.8	0.90	78 in·lb	
6	Brake Pipe Nipples	18	1.8	13	
7	Brake Hose Banjo Bolts	25	2.5	18	
8	Front Axle Nuts	147	15	108	
9	Bleed Valves	7.8	0.80	69 in·lb	
10	Wheel Cylinder Mounting Bolts	12	1.2	106 in·lb	
11	Breather Fitting (KAF400-A/C)	6.0	0.61	53 in·lb	
12	Front Brake Panel Mounting Bolts	34	3.5	25	L

13. Grommet (KAF400-A/C)
14. Grease Seal (KAF400-A/C)
15. Breather Hose (KAF400-A/C)
16. KAF400-A1 ~ A9/B1 ~ B9/C1 ~ C9
17. KAF400-A1 ~ AE/B1 ~ BE/C1 ~ CA

AG: Apply lithium grease (NLGI Grade No.2).
G: Apply grease.
L: Apply a non-permanent locking agent.
LG: Apply liquid gasket.
R: Replacement Parts

Exploded View

Rear Brake

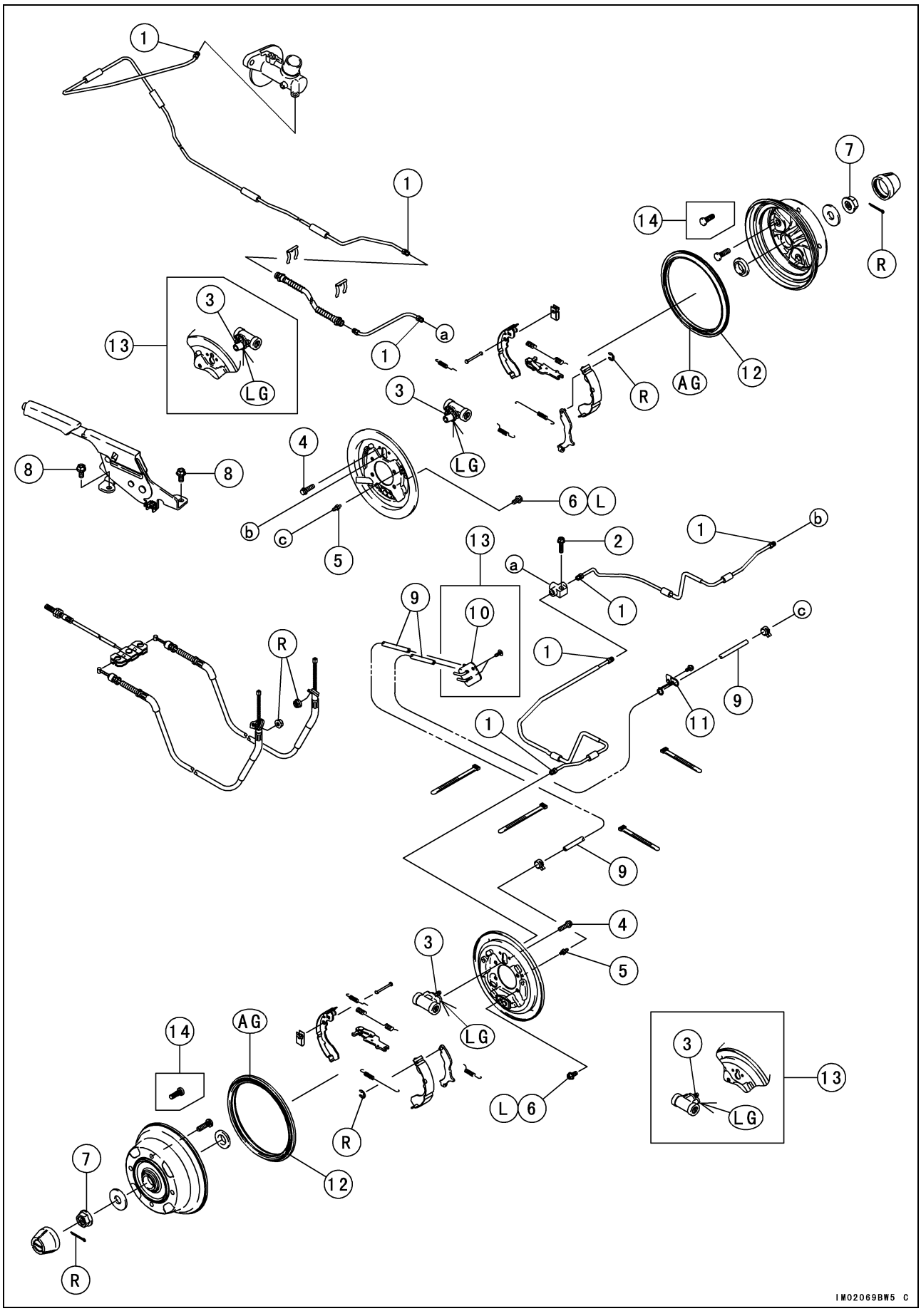

Exploded View

No.	Fastener	Torque			Remarks
		N·m	kgf·m	ft·lb	
1	Brake Pipe Nipples	18	1.8	13	
2	Brake Pipe Mounting Bolt	25	2.5	18	
3	Bleed Valves	7.8	0.80	69 in·lb	
4	Wheel Cylinder Mounting Bolts	12	0.2	106 in·lb	
5	Breather Fitting (KAF400-A/C)	6.0	0.61	53 in·lb	
6	Rear Brake Panel Mounting Bolts	34	3.5	25	L
7	Rear Axle Nuts	304	31	224	
8	Parking Brake Lever Mounting Bolts	25	2.5	18	

9. Breather Hoses (KAF400-A/C)
10. Bracket (KAF400-A/C)
11. Clamp (KAF400-A/C)
12. Grease Seals (KAF400-A/C)
13. KAF400-A1 ~ A9/B1 ~ B9/C1 ~ C9
14. KAF400-A1 ~ AE/B1 ~ BE/C1 ~ CA

AG: Apply lithium grease (NLGI Grade No.2).
L: Apply a non-permanent locking agent.
LG: Apply liquid gasket.
R: Replacement Parts

Specifications

Item	Standard	Service Limit
Brake Fluid		
Type	DOT3	– – –
Fluid Level	Between upper and lower level lines	– – –
Brake Pedal		
Brake Pedal Free Play	2 ~ 5 mm (0.08 ~ 0.20 in.)	– – –
Brake Drums		
Brake Drum Inside Diameter	165.00 ~ 165.16 mm (6.4961 ~ 6.5023 in.)	165.75 mm (6.526 in.)
Brake Panel Assemblies		
Brake Shoe Lining Thickness	4 mm (0.16 in.)	1 mm (0.04 in.)
Parking Brake Lever And Cables		
Parking Brake Lever Travel	8 ~ 12 notches (clicks)	– – –

Special Tools

Clutch Spring Compressor:
57001-1162

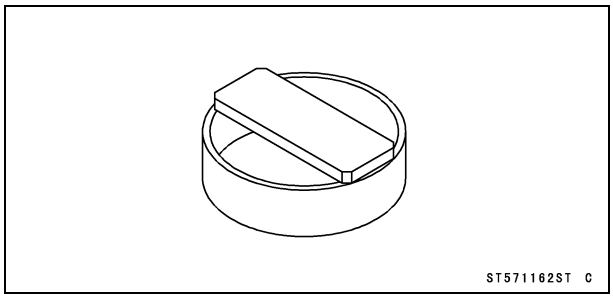

Brake Drum Pusher, M18 × 1.5:
57001-1261

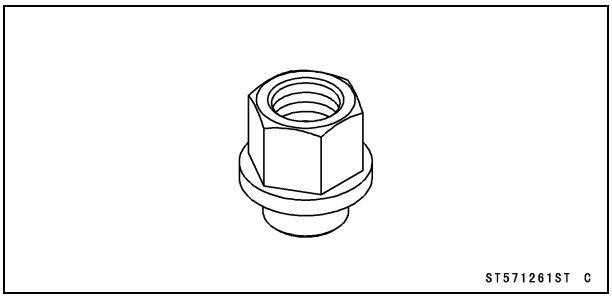

Rotor Puller, M16/M18/M20/M22 × 1.5:
57001-1216

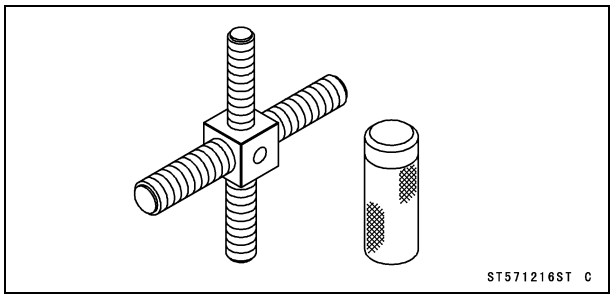

Brake Drum Holder:
57001-1325

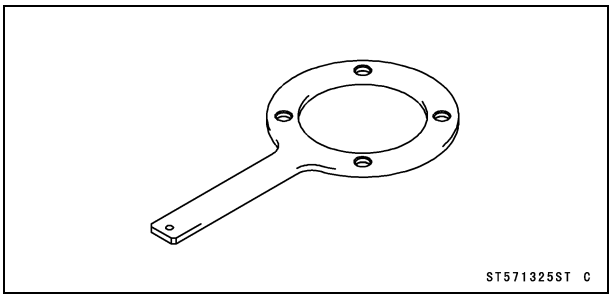

Brake Drum Remover:
57001-1260

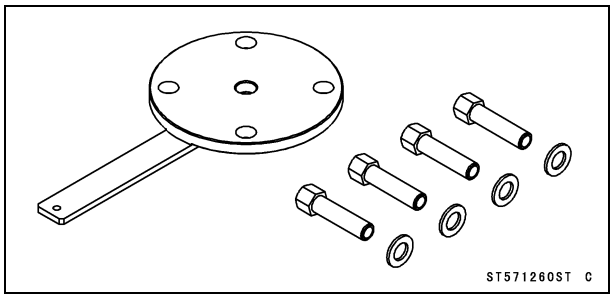

Grease Seal Driver Set:
57001-1629

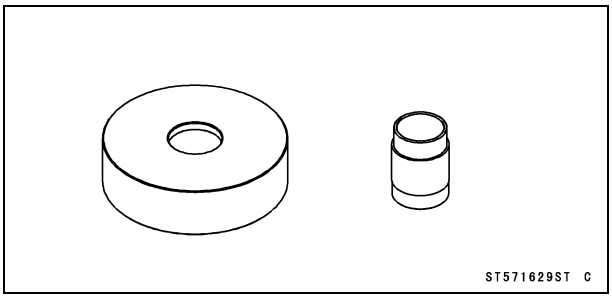

Brake Fluid

Brake Fluid Recommendation

- Use extra heavy-duty brake fluid only from a container marked DOT3.

Recommended Brake Fluid
Type: DOT3

⚠ WARNING

Brake fluid that is contaminated by moisture or dirt, mixed or contains air has a lower boiling point and can cause the brake to be ineffective or fail, and it may cause rubber parts to deterioate, resulting in an accident causing injury or death. Never reuse old brake fluid. Do not use fluid from a container that has been left unsealed or that has been open for a long time. Do not mix two types and brands of fluid for use in the brake. Don't leave the reservoir cap off for any length of time to avoid moisture contamination of the fluid. Don't add or change the fluid in the rain or when a strong wind is blowing. If any of the brake line fittings or the bleed valve is opened at any time, the AIR MUST BE BLED FROM THE BRAKE LINE.

NOTICE

Brake fluid quickly ruins painted surfaces; any spilled fluid should be completely wiped up immediately.

Brake Fluid Level Inspection

- Refer to the Brakes in the Periodic Maintenance chapter.

Brake Fluid Change

- Refer to the Brakes in the Periodic Maintenance chapter.

Brake Line Air Bleeding

- Tilt up the front cargo hood.
- Remove:
  Rubber Cap
  Brake Fluid Reservoir Cap
- Level the reservoir [A] and check that there is plenty of fluid in the reservoir.

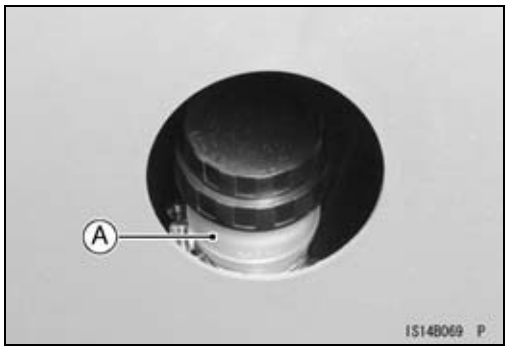

NOTE

○ *The fluid level must be checked several times during the bleeding operation and replenished as necessary. If the fluid in the reservoir runs completely out any time during bleeding, the bleeding operation must be done over again from the beginning since air will have entered the line.*

- With the reservoir cap off, slowly pump the brake pedal several times until no air bubbles can be seen rising up through the fluid from the holes at the bottom of the reservoir. This bleeds the air from the master cylinder end of the line.

Brake Fluid

- Remove the wheel for extra clearance (see Wheels/Tires chapter).
- Connect a clear plastic hose [A] to the bleed valve at the wheel cylinder, running the other end of the hose into a container.
  [B] Brake Panel

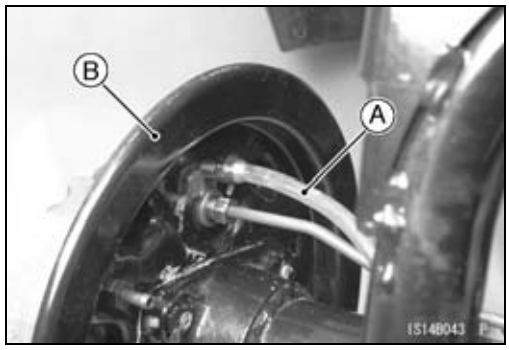

NOTE

○*Start with the rear left or right wheel and finish with the front left or right wheel.*

- Bleed the brake line and the caliper as follows:

○Repeat this operation until no more air can be seen coming out into the plastic hose.

1. Pump the brake pedal until it becomes hard, and apply the brake pedal and hold it.
2. Quickly open and close the bleed valve while holding the brake pedal applied.
3. Release the brake pedal.

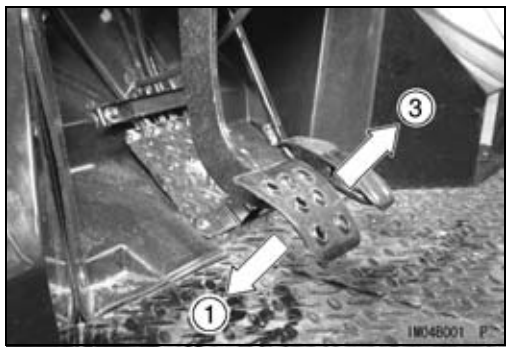

- Tighten:

Torque - Bleed Valves: 7.8 N·m (0.80 kgf·m, 69 in·lb)

- Repeat the previous step for each wheel.
- When air bleeding is finished, add fluid up to the upper level in the reservoir.
- Apply the brake forcefully for a few seconds, and check for fluid leakage around the fittings.
- Install the removed parts.

Torque - Master Cylinder Reservoir Cap: 3.4 N·m (0.35 kgf·m, 30 in·lb)

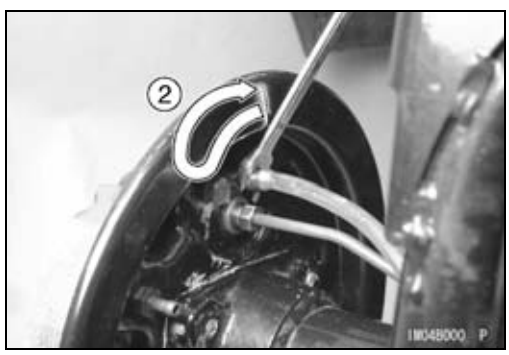

Brake Pedal and Master Cylinder

Brake Pedal Play Inspection

- Refer to the Brakes in the Periodic Maintenance chapter.

Master Cylinder Removal

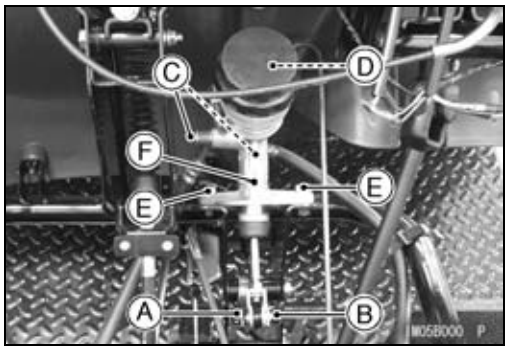

- Remove:
  Front Cargo Compartment (see Frame chapter)
  Cotter Pin [A] and Pin [B]
  Brake Hose Banjo Bolts [C]
  Brake Pipe Nipple [D] (unscrew)
- Immediately wipe up any brake fluid that spills.

NOTICE
Brake fluid quickly ruins painted surfaces; any spilled fluid should be completely wiped up immediately.

- Remove:
  Master Cylinder Mounting Bolts [E] and Master Cylinder [F]

Master Cylinder Installation

- Use a new flat washer on each side of the brake hose fitting.
- Apply brake fluid to the brake pipe nipple threads.
- Tighten:

Torque - Brake Hose Banjo Bolts: 25 N·m (2.5 kgf·m, 18 ft·lb)
Brake Pipe Nipple: 18 N·m (1.8 kgf·m, 13 ft·lb)

- Bleed the brake line after master cylinder installation.
- Adjust the brake pedal play (see Brake Pedal Play Inspection in the Periodic Maintenance chapter).
- Check that the brake line has proper fluid pressure and no fluid leakage.

Master Cylinder Disassembly/Assembly

- Refer to Brake Master Cylinder Cup and Dust Seal Replacement in the Periodic Maintenance chapter.

Brake Pedal and Master Cylinder

Master Cylinder Inspection

- Disassemble the master cylinder (see Brake Master Cylinder Cup and Dust Seal Replacement in the Periodic Maintenance chapter).
- Check that there are no scratches, rust or pitting on the inside of the cylinder [A] and on the outside of the pistons [B].

★If the cylinder or piston shows any damage, replace them.

- Inspect the primary cups [C] and secondary cups [D].

★If a cup is worn, damaged, softened (rotted), or swollen, replace it.

★If fluid leakage is noted at the brake push rod, the secondary cup of the primary piston should be replaced.

- Check the dust cover [E] for damage.

★If it is damaged, replace it.

- Check that the relief [F] and supply [G] ports are not plugged.

★If the small relief port becomes plugged, the brake shoes will drag on the drum. Blow the ports clean with compressed air.

- Check the piston return springs [H] for any damage.

★If the spring is damaged, replace it.

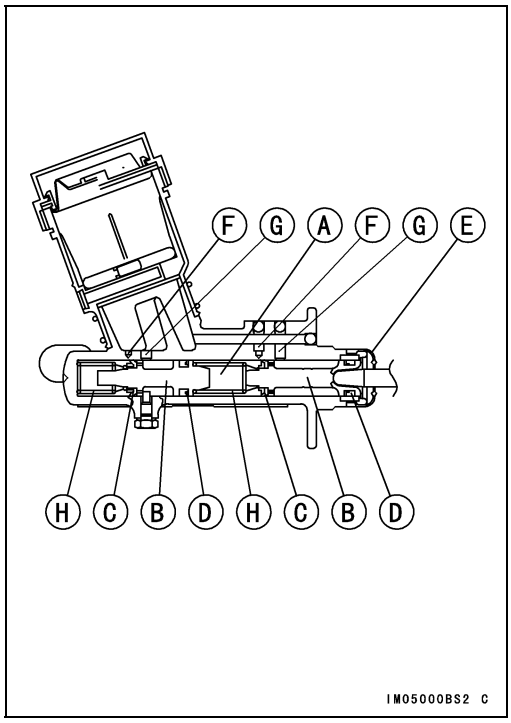

Brake Hoses and Pipes

Brake Hose and Pipe Inspection

- Refer to the Brakes in the Periodic Maintenance chapter.

Brake Hose and Pipe Replacement

- Refer to the Brakes in the Periodic Maintenance chapter.

Brake Drums

Brake Drum Removal

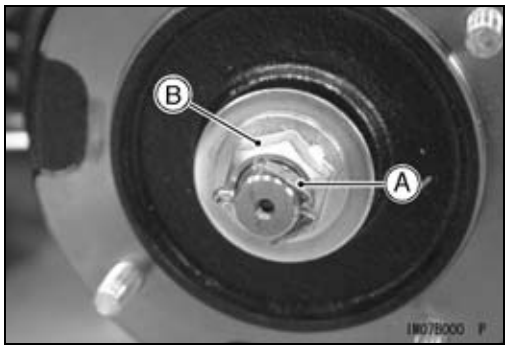

- Remove:
  Wheel (see Wheels/Tires chapter.)
  Cotter Pin [A]
  Axle Nut [B] and Washer

○Loosen the axle nut, while applying the brake, and release the brake.

○You can also loosen the axle nut, using the brake drum holder (special tool).

Special Tool - Brake Drum Holder: 5700-1325

- Be sure to release the parking brake when removing the rear brake drum.

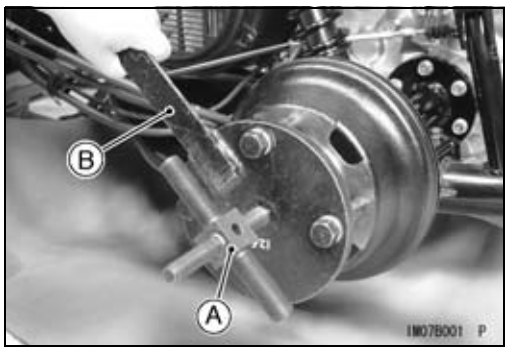

- The brake drums are press-fitted on the axles. Use the brake drum remover set and rotor puller (special tools) to remove the drums.

○Mount the brake drum remover on the drum studs with the remover nuts and washers (parts in the remover set).

Special Tools - Rotor Puller, M16/M18/M20/M22 × 1.5 [A]: 57001-1216
Brake Drum Remover [B]: 57001-1260

- Hold the brake drum remover and tighten the rotor puller.
- Remove:
  Brake Drum

Brake Drum Installation

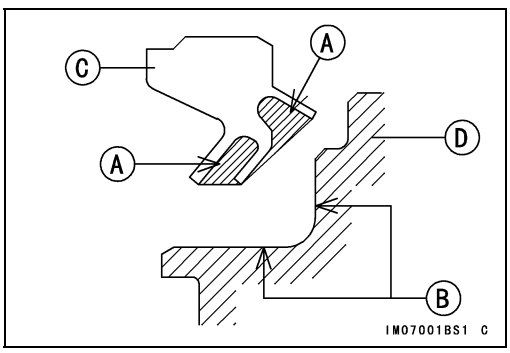

- Apply lithium grease (NLGI Grade No.2) to the brake drum grease seal lips [A] and inside [B] of the drum as shown.
  Grease Seal (KAF400-A/C models) [C]
  Brake Drum [D]

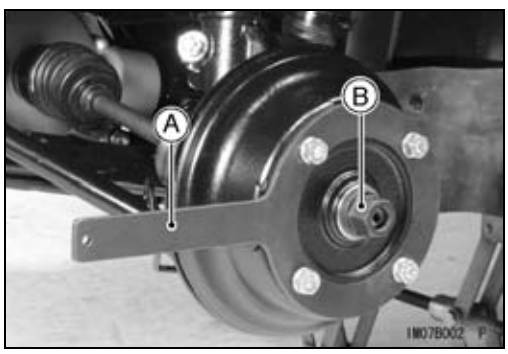

- Install:
  Brake Drum
- Mount the brake drum holder [A] securely on the drum studs with the wheel nuts.

Special Tool - Brake Drum Holder: 57001-1325

- For front brake drum, using the brake drum pusher [B], and tighten it until the pusher stops.

Special Tool - Brake Drum Pusher, M18 × 1.5: 57001-1261

- And then remove the pusher, install the washer and axle nut.
- Tighten:

Torque - Front Axle Nuts: 147 N·m (15 kgf·m, 108 ft·lb)

- For rear brake drum, install the washer and axle nut.
- Tighten:

Torque - Rear Axle Nuts: 304 N·m (31 kgf·m, 224 ft·lb)

Brake Drum Wear Inspection

- Refer to the Brakes in the Periodic Maintenance chapter.

Brake Panel Assemblies

Brake Panel Assy Removal

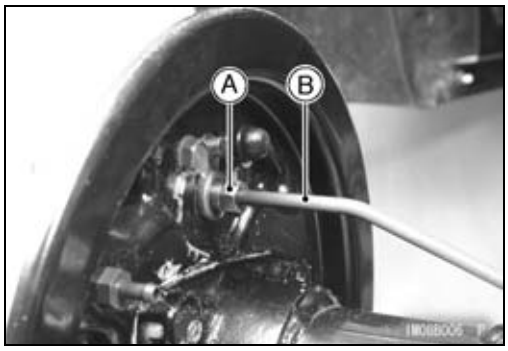

- Remove:
  Brake Drum (see Brake Drum Removal)
- Disconnect:
  Breather Hose
- Remove:
  Brake Pipe Nipple [A] and Brake Pipe [B]
  Clip (for Front Brake Panel)
- Immediately wipe up any brake fluid that spills.

NOTICE
Brake fluid quickly ruins painted surfaces; any spilled fluid should be completely wiped up immediately.

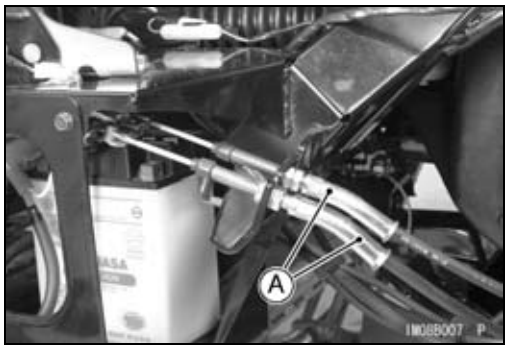

- Remove (for Rear Brake Panel):
  Left Side Cover (see Frame chapter)
  Parking Brake Cable End(s) [A]
  Rear Brake Drum (see Brake Drum Removal)

- Remove
  Collar
  Brake Panel Mounting Bolts [A]
  Brake Panel Assembly [B]

Brake Panel Assy Installation

(for Front Brake Panel)

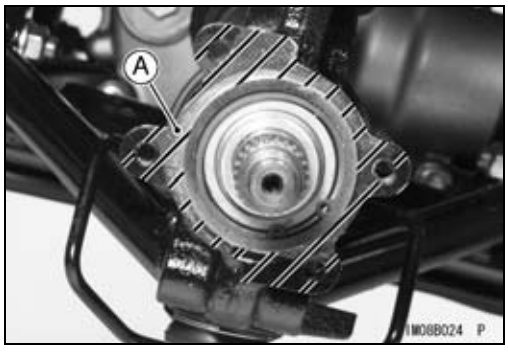

- Clean the mating surface of the brake panel and steering knuckle.
- Apply liquid gasket to the mating surface [A] of the steering knuckle (except bolt holes) (KAF400-A/C).

  Sealant - ThreeBond 1215 Gray

Brake Panel Assemblies

(for Rear Brake Panel)

- Clean the mating surface of the brake panel and drive shaft bracket.
- Apply liquid gasket to the mating surface [A] of the drive shaft bracket (except bolt holes) (KAF400-A/C).

  Sealant - ThreeBond 1215 Gray

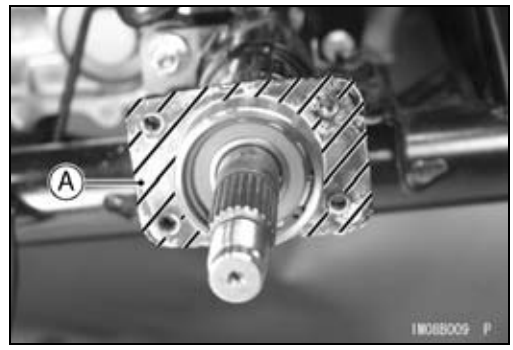

- Install:
  Brake Panel Assembly
  Collar

○For rear collar installation, face the stepped side [A] to inside [B].

- Apply a non-permanent locking agent to the brake panel mounting bolts.

  Bond - Loctite 242 Blue

- Tighten:

  Torque - Brake Panel Mounting Bolts: 34 N·m (3.5 kgf·m, 25 ft·lb)

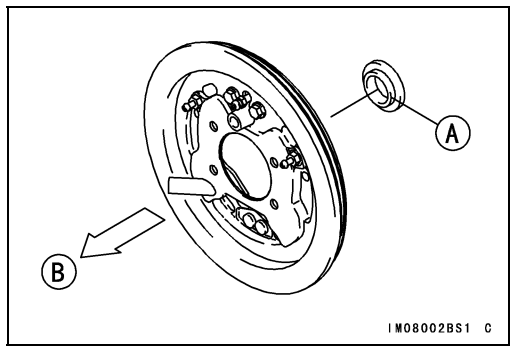

- Install:
  Parking Brake Cable End(s) (for Rear Brake Panel)

- Bleed the brake line after brake drum installation (see Brake Line Air Bleeding in this chapter).
- Be sure to check the brake system for good braking power, no brake drag, and no fluid leakage.

⚠ WARNING

After servicing, it takes several applications of the brake pedal before the brake shoes contact the drum, which could result in increased stopping distance and cause an accident resulting in injury or death. Do not attempt to ride the vehicle until a firm brake pedal is obtained by pumping the pedal until the shoes are against the drum.

- Adjust:
  Parking Brake Lever Inspection (see Parking Brake Lever Inspection in the Periodic Maintenance chapter).

Brake Panel Disassembly

- Remove:
  Brake Drum (see Brake Drum Removal)
  Brake Pipe Nipple [A] and Brake Pipe [B] (If the brake panel or wheel cylinder are removed.)
- Immediately wipe up any brake fluid that spills.

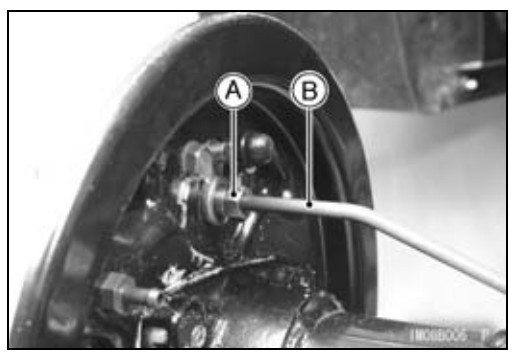

NOTICE

Brake fluid quickly ruins painted surfaces; any spilled fluid should be completely wiped up immediately.

Brake Panel Assemblies

● Using a suitable tool, remove the brake shoe spring [A].

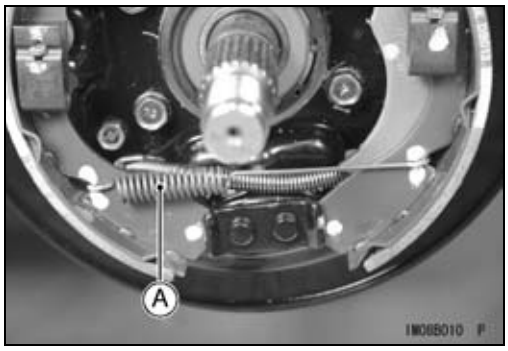

● While pushing the shoe hold-down spring [A], turn the pin [B] 90° and remove the spring.

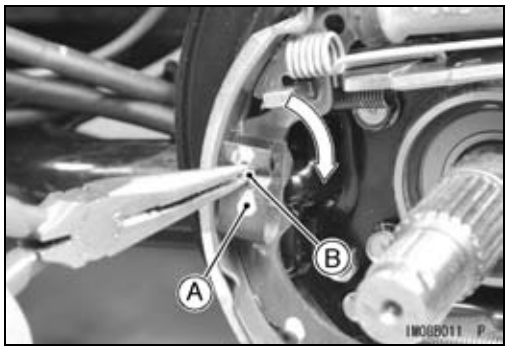

● Remove:
Shoe [A]
Shoe Spring [B]
Parking Brake Lever Linkage [C]

NOTE

○*Wrap the brake shoes with a clean cloth to protect the linings from grease or dirt.*

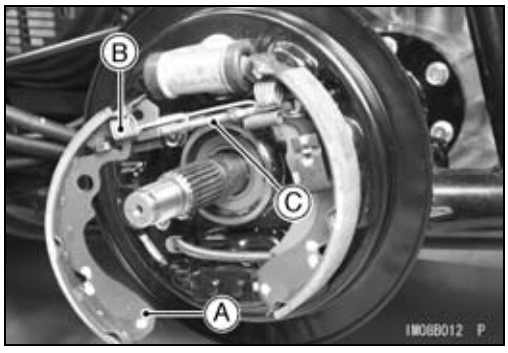

● While pushing the shoe hold-down spring [A], turn the pin [B] 90° and remove the spring
● Remove:
Shoe [C]

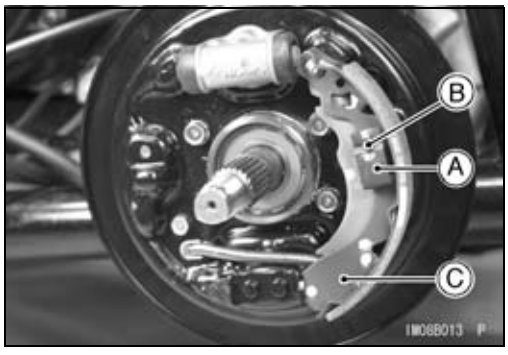

● Remove (for Rear Brake Panel):
Parking Brake Cable End(s)
○Hold the bolt [A] and loosen the nut.

NOTICE
Do not turn the bolt. The bolt is engaged by the spline in the brake panel. When removing the cable, loosen the nut only.

○Remove:
Parking Brake Cable Bracket [B]
Parking Brake Cable

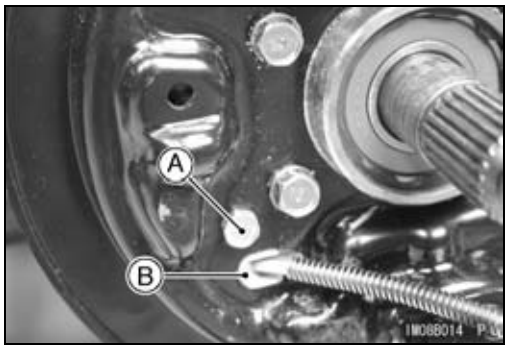

Brake Panel Assemblies

Brake Panel Assembly

● Install (for Rear Brake Panel):
New Gasket [A]

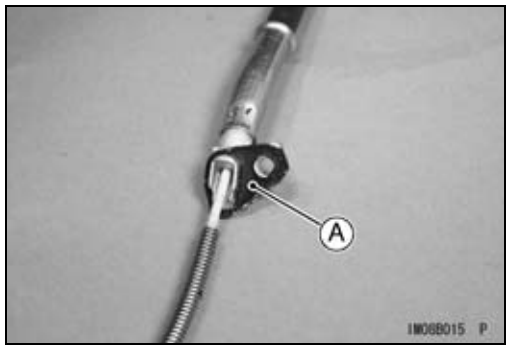

● Install (for Rear Brake Panel):
Parking Brake Cable
Parking Brake Cable Bracket [A]
Parking Brake Cable Bracket Nut [B]
○Hold the bolt [C] and tighten the nut.

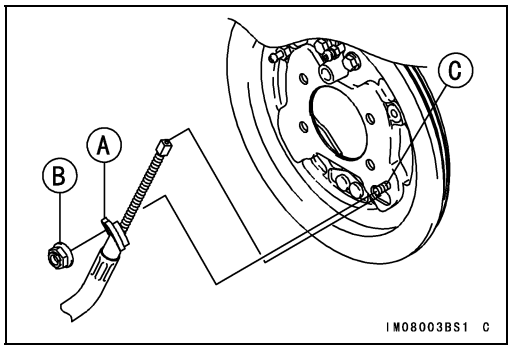

NOTICE
Do not turn the bolt. The bolt is engaged by the spline in the brake panel. When installing the cable, tighten the nut only.

● Apply high-temperature grease:
Contact Points [A] of Brake Panel and Brake Shoes

● Install:
Shoe [A]
○Do not attach greese and/or oil to the surface of the brake shoes.
● While pushing the shoe hold-down spring [B], turn the pin [C] 90° and install the spring.

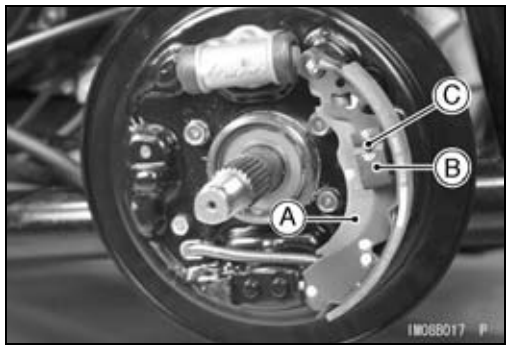

● Install:
Linkage Springs [A]
Parking Brake Lever Linkage [B]
Shoe Spring [C]

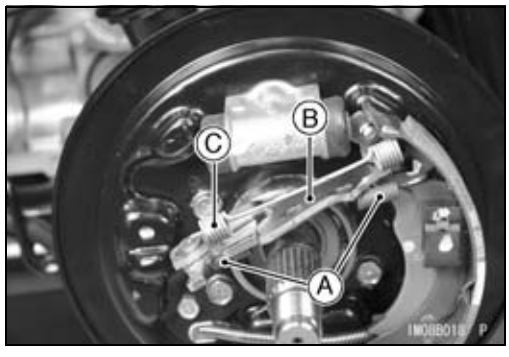

Brake Panel Assemblies

- Install:
  Shoe [A]

- Install:
  Shoe [A]
- While pushing the shoe hold-down spring [B], turn the pin [C] 90° and install the spring.

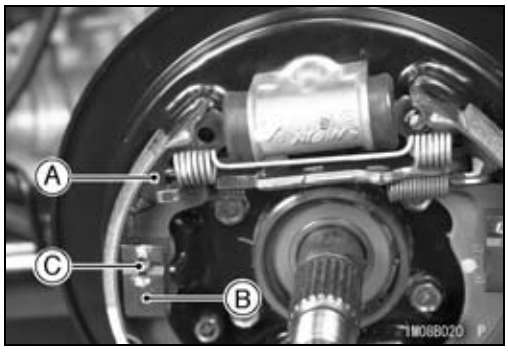

- Pry the ratchet lever [A] with a screwdriver [B] to reset the shoe clearance adjuster in its original position.

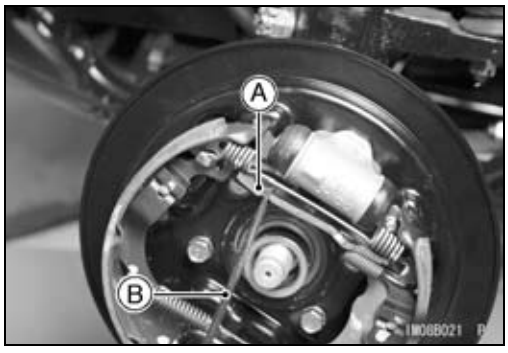

[A] Original Position of Ratchet Lever
[B] Ratchet Lever

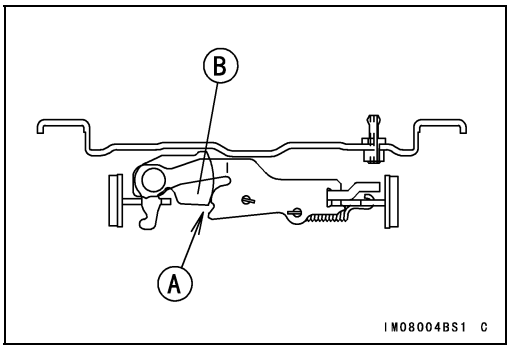

- Apply liquid gasket to around [A] of shoe hold-down spring pin heads.
- Install:
  Brake Pipe and Brake Pipe Nipple [B]
- Tighten:

  Torque - Brake Pipe Nipple: 18 N·m (1.8 kgf·m, 13 ft·lb)
- Install:
  Brake Drum (see Brake Drum Installation)

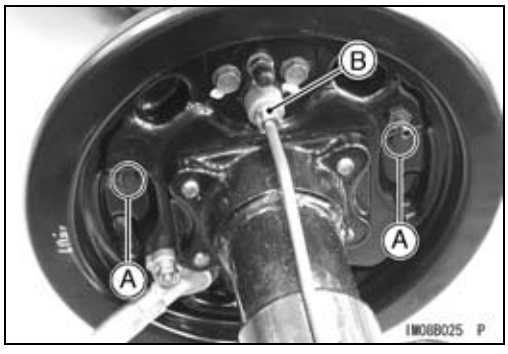

Brake Panel Assemblies

- Bleed the brake line (see Brake Line Air Bleeding).
- Be sure to check the brake system for good braking power, no brake drag and no fluid leakage.

⚠ WARNING

After servicing, it takes several applications of the brake pedal before the brake shoes contact the drum, which could result in increased stopping distance and cause an accident resulting in injury or death. Do not attempt to ride the vehicle until a firm brake pedal is obtained by pumping the pedal until the shoes are against the drum.

- Inspect and if necessary adjust:
  Parking Brake Lever Inspection (see Parking Brake Lever Inspection in the Periodic Maintenance chapter)

Wheel Cylinder Removal/Installation

- Refer to Brake Wheel Cylinder Assembly Replacement in the Periodic Maintenance chapter.

Wheel Cylinder Assembly

- Before assembly, clean all parts including the wheel cylinder with brake fluid or alcohol, and apply brake fluid to the removed parts and the inner wall of the cylinder.

NOTICE

Use only brake fluid, isopropyl alcohol, or ethyl alcohol for cleaning brake parts. Do not use any other fluid for cleaning these parts. Gasoline, motor oil, or any other petroleum distillate will cause deterioration of the rubber parts. Oil spilled on any part will be difficult to wash off completely, and will eventually deteriorate the rubber used in the brake.

Wheel Cylinder Inspection

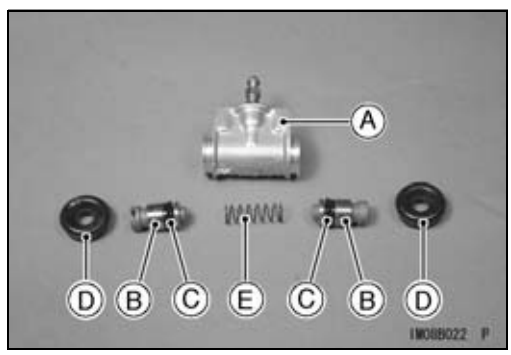

- Remove the wheel cylinder (see Brake Wheel Cylinder Assembly Replacement in the Periodic Maintenance chapter).
- Disassemble the wheel cylinder.
- Check that there are no scratches, rust or pitting on the inside of the cylinder [A] and on the outside of the piston [B].
- ★If the cylinder or piston shows any damage, replace the wheel cylinder.
- Inspect the cups [C].
- ★If a cup is worn, damaged, softened (rotted) or swollen, replace the wheel cylinder.
- ★If fluid leakage is noted at the dust seals, the wheel cylinder should be replaced to renew the cup.
- Check the dust seals [D] for damage.
- ★If they are damaged, replace the wheel cylinder.
- Check the spring [E] for any damage.
- ★If the spring is damaged, replace the wheel cylinder.

Brake Shoe Lining Wear Inspection

- Refer to Brake Wear Inspection in the Periodic Maintenance chapter.

Brake Panel Assemblies

Brake Shoe Spring Inspection

- Visually inspect the brake shoe springs [A] and linkage springs [B] for breaks or distortion.

★If the springs are damaged in any way, replace them.

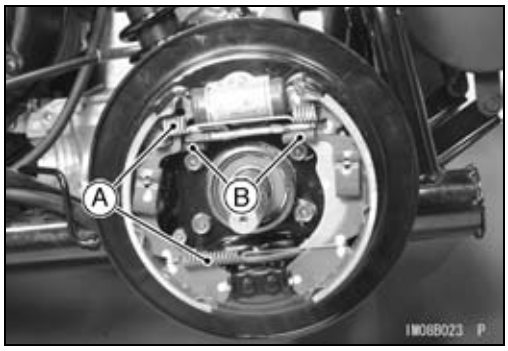

Grease Seal Replacement (KAF400-A/C)

- Remove:
  Brake Panel Assembly (see Brake Panel Assy Removal)
  Bleed Valve
  Breather Fitting
  Grease Seal [A]

NOTICE
Be careful not to damage the brake panel when removing the grease seal. **Do not remove the cable bracket bolt [B].**

- Install the grease seal [A] to specified position as shown.
  Top Surface of Grease Seal [B]
  Center Bottom of Brake Panel [C]
  6.2 ~ 7.0 mm (0.24 ~ 0.27 in.) [D]

NOTE

○*If the following special tool (Grease Seal Driver Set) is used, the position will be secured.*

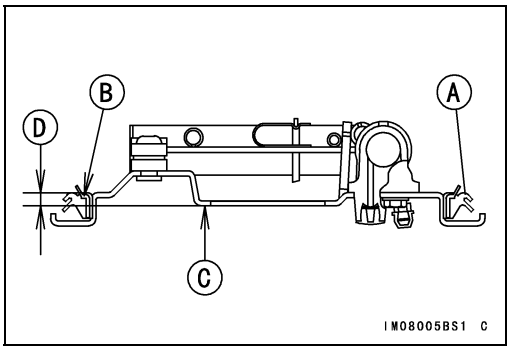

- Apply rubber lubricant oil to inside area of the new grease seal.
- Put the brake panel [A] on the flat plate [B] so that the cable bracket bolt [C] is not contact to the plate.
- Put the guide [D] in the panel.

  Special Tool - Grease Seal Driver Set: 57001-1629
- Put the grease seal [E] on the brake panel evenly.

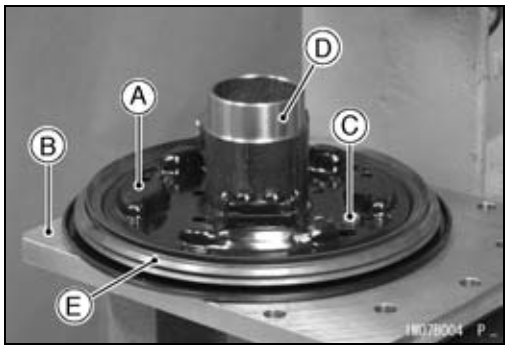

- Put the grease seal driver [A] on the grease seal evenly.

  Special Tool - Grease Seal Driver Set: 57001-1629
- Put the compressor [B] to center on the grease seal driver.

  Special Tool - Clutch Spring Compressor: 57001-1162
- Using a press install the grease seal.
- Apply lithium grease (NLGI Grade No.2) to the grease seal lips (see Brake Drum Installation).
- Tighten:

  Torque - Bleed Valve: 8.0 N·m (0.82 kgf·m, 71 in·lb)
  Breather Fitting: 6.0 N·m (0.61 kgf·m, 53 in·lb)

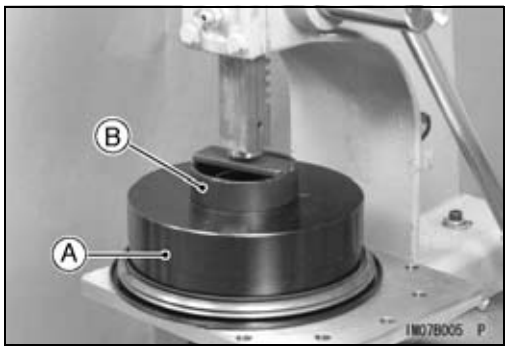

Parking Brake Lever and Cables

Parking Brake Lever Travel Adjustment

- Refer to the Brakes in the Periodic Maintenance chapter.

Parking Brake Cable Lubrication/Inspection

- Refer to the General Lubrication in the Periodic Maintenance chapter.

Parking Brake Lever Removal

- Remove:
  Left Side Cover (see Frame chapter)
  Bracket Bolts [A], washers and Bracket [B]
  Band [C]

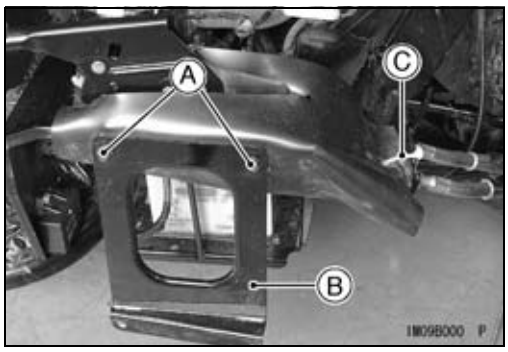

- Unhook the rubber cover [A] from the battery holder rod [B], and remove it.

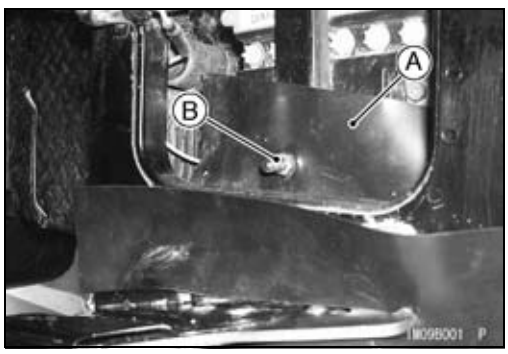

- Remove:
  Parking Brake Light Switch Lead Connector [A]
  Adjusting Nuts [B] and Parking Brake Cable [C]
  Parking Brake Lever Mounting Bolts [D]
  Frame Ground Terminal [E]
  Parking Brake Lever Assembly [F]

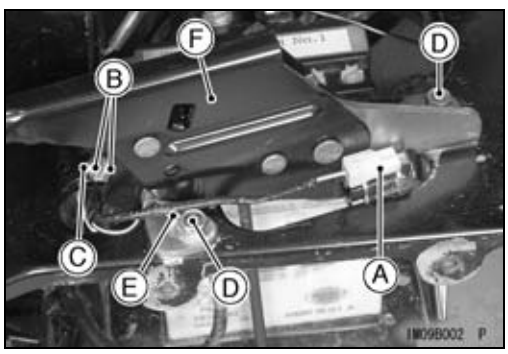

Parking Brake Lever Installation

- Install:
  Parking Brake Lever Assembly
  Frame Ground Terminal [A]
  Parking Brake Lever Mounting Bolts
- Tighten:

  Torque - Parking Brake Lever Mounting Bolts: 25 N·m (2.5 kgf·m, 18 ft·lb)

- Install:
  Parking Brake Light Switch Lead Connector [B]
  Parking Brake Cable and Adjusting Nuts [C]

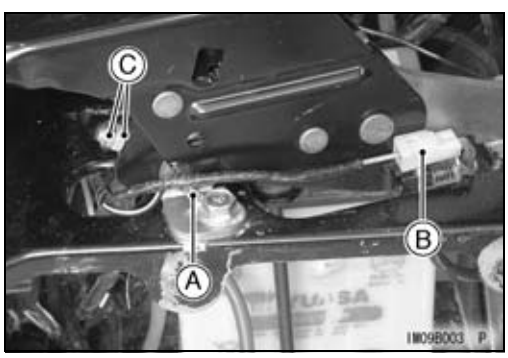

Parking Brake Lever and Cables

★If the adjusting nut doesn't reach the cable, loosen the adjuster mounting nuts [A].
- Adjust the parking brake lever (see Parking Brake Lever Inspection in the Periodic Maintenance chapter).

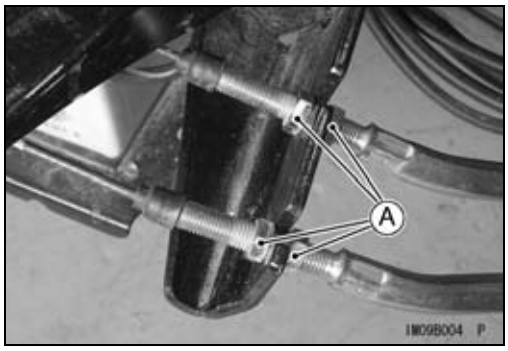

- Install:
  Rubber Cover [A]

○Just push the hole of the rubber cover onto the battery holder rod [B].
  Battery [C]

NOTE

○*Do not tighten the cover with the rod nut [D].*

○Put the rubber cover on the parking brake lever assembly [E] through the slit of the cover.
- Install:
  Bracket [F]
  Washers [G]
  Bracket Bolts [H]

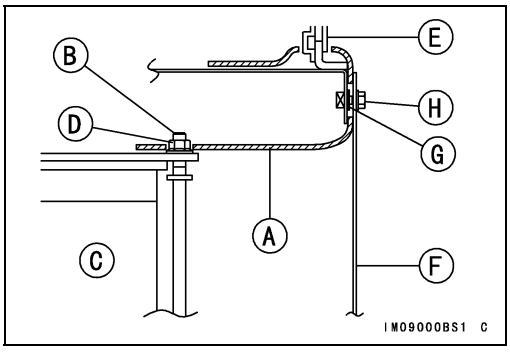

- Tighten the band [A] through the upper and lower holes [B] of the rubber cover and over the cable bracket [B].
- Install:
  Left Side Cover (see Frame chapter)

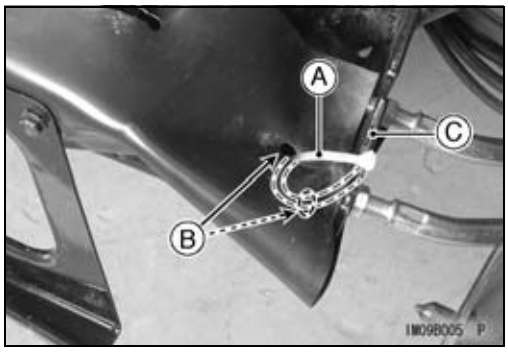

Suspension

Table of Contents

Exploded View 13-2
Specifications 13-4
Special Tools 13-5
Struts and Rear Shock Absorbers 13-6
Strut (Front Shock Absorber) Removal 13-6
Strut (Front Shock Absorber) Installation 13-6
Rear Shock Absorber Preload Adjustment 13-7
Rear Shock Absorber Removal 13-8
Rear Shock Absorber Installation 13-8
Rear Shock Absorber Inspection 13-8
Front Suspension Arms 13-9
Front Suspension Arm Removal 13-9
Front Suspension Arm Installation 13-10
Front Suspension Arm Inspection 13-10
Swingarm 13-11
Swingarm Removal 13-11
Swingarm Installation 13-11
Swingarm Inspection 13-12
Swingarm Joint Replacement 13-12

Exploded View

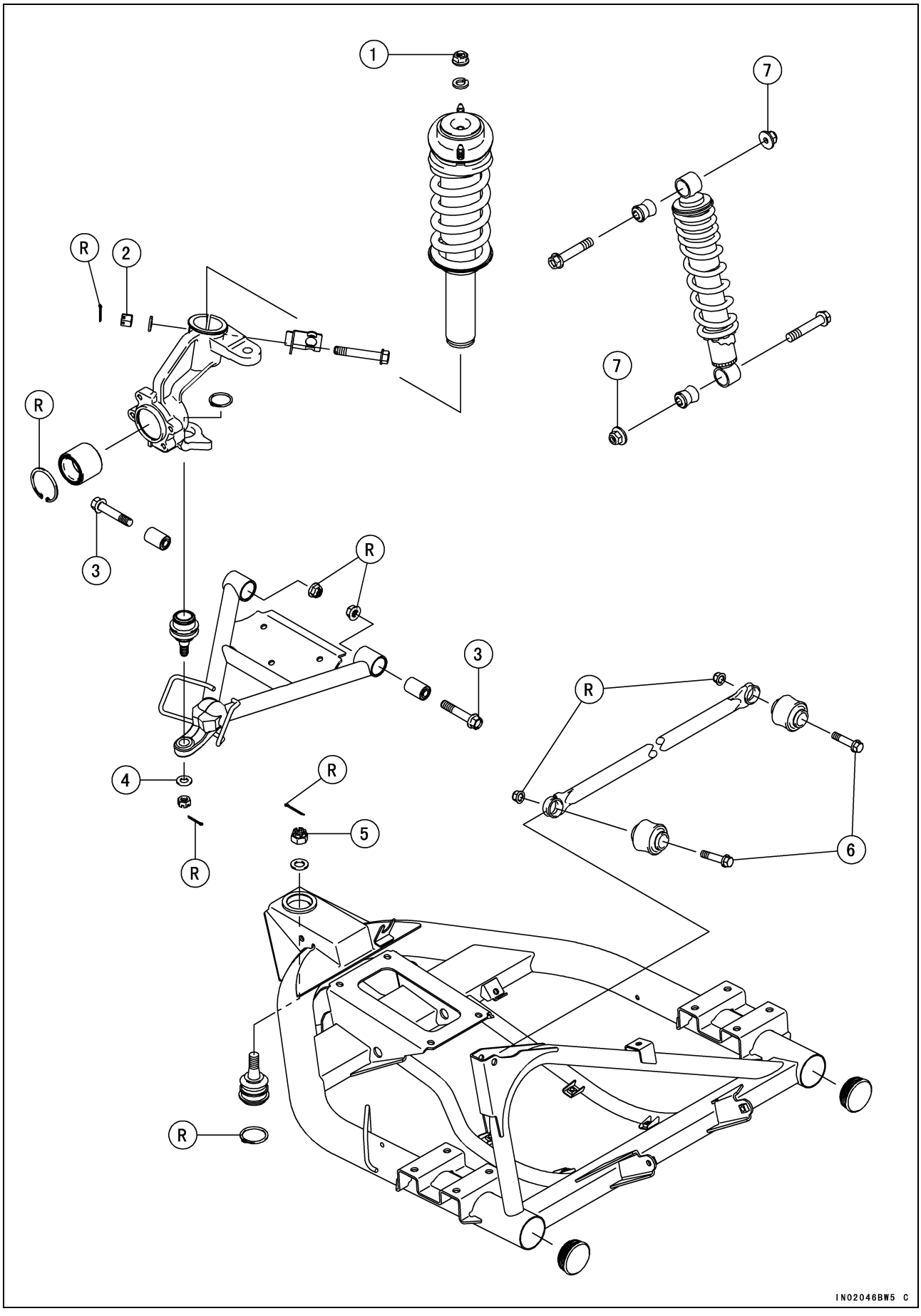

Exploded View

No.	Fastener	Torque			Remarks
		N·m	kgf·m	ft·lb	
1	Strut Mounting Nuts	49	5.0	36	
2	Strut Clamp Nuts	98	10	72	
3	Front Suspension Arm Pivot Bolts	88	9.0	65	
4	Front Suspension Arm Joint Nuts	78	8.0	58	
5	Swingarm Joint Nut	54	5.5	40	
6	Swingarm Rod Bolts	50	5.1	37	
7	Rear shock Absorber Mounting Nuts	54	5.5	40	

R: Replacement Parts

Specifications

Item	Standard	Service Limit
Rear Shock Absorbers		**(Usable Range)**
Spring preload setting position	3rd position	1 ~ 5 positions

Special Tools

Outside Circlip Pliers:
57001-144

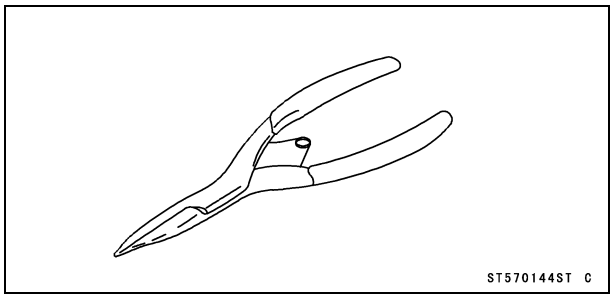

Steering Stem Nut Wrench:
57001-1100

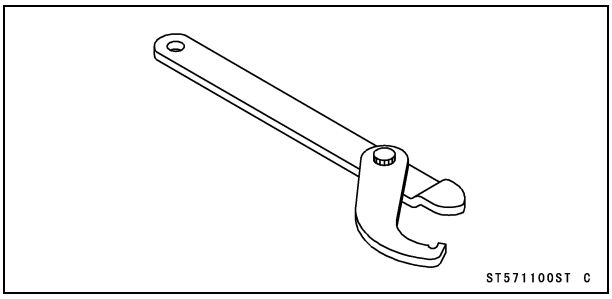

Struts and Rear Shock Absorbers

Strut (Front Shock Absorber) Removal

- Remove:
  Front Cargo Compartment (see Frame chapter)
  Front Wheel (see Wheels/Tires chapter)
  Brake Panel Assembly (see Brakes chapter)
  Tie-rod End [A] (see Knuckle Removal in the Steering chapter)

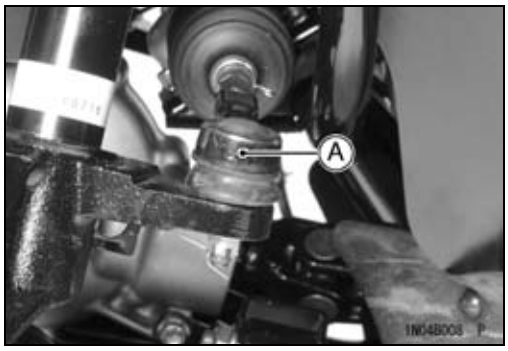

- Remove:
  Cotter Pin [A]
  Strut Clamp Bolt and Nut [B]

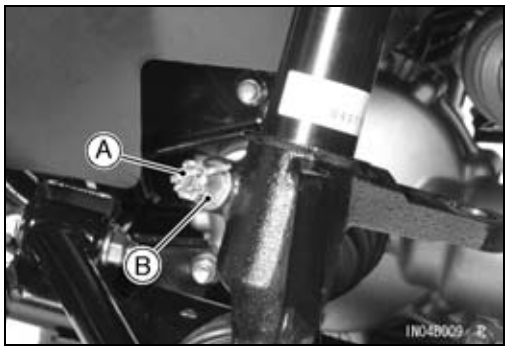

- Remove:
  Suspension Arm Bolts [A]
  Suspension Arm with Steering Knuckle [B]

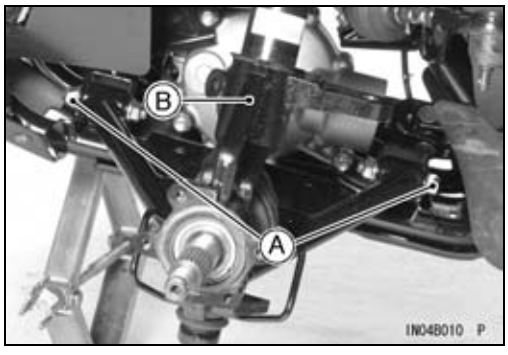

- Remove:
  Strut Mounting Nuts [A]
  Strut

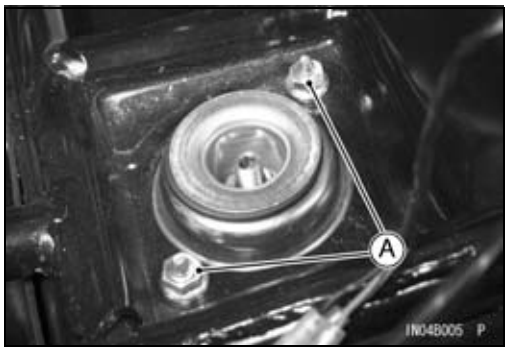

Strut (Front Shock Absorber) Installation

- Insert the strut into the steering knuckle [A] while aligning the notch [B] on the strut with the clamp bolt hole [C] on the steering knuckle.
- Tighten:

Torque - Strut Mounting Nuts: 49 N·m (5.0 kgf·m, 36 ft·lb)
Strut Clamp Nut: 98 N·m (10 kgf·m, 72 ft·lb)

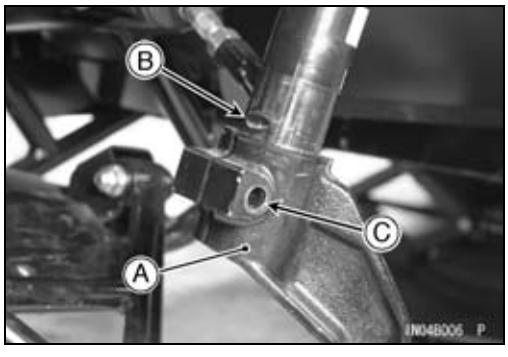

Struts and Rear Shock Absorbers

- Insert a new cotter pin [A].

NOTE

○*When inserting the cotter pin, if the slots in the nut do not align with the cotter pin hole in the bolt, tighten the nut clockwise [B] up to next alignment.*
○*It should be within 30 degrees.*
○*Loosen once and tighten again when the slit goes past the nearest hole.*

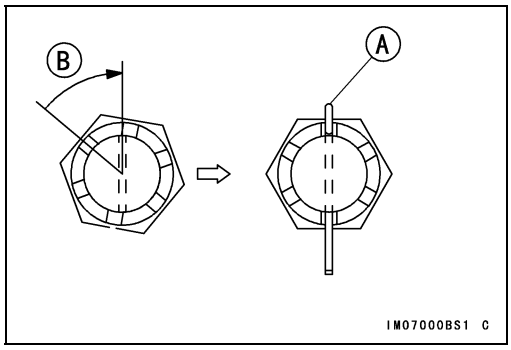

- Bend the cotter pin [A] over the nut.
- Install the removed parts (see appropriate chapter).

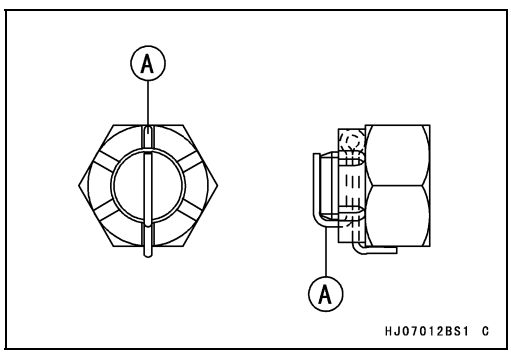

Rear Shock Absorber Preload Adjustment

The spring adjusting sleeve [A] on the rear shock absorbers have 5 positions so that the springs can be adjusted for different terrain and loading conditions. If the spring action feels too soft or too stiff, adjust it in accordance with the following table.

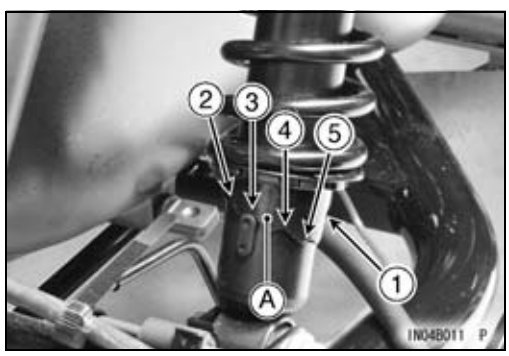

Spring Action

Position	Spring Force	Setting	Load	Terrain	Speed
1		Soft	Light	Smooth	Low
2		↑	↑	↑	↑
3 (STD)					
4	↓	↓	↓	↓	↓
5	Strong	Hard	Heavy	Rough	High

- Turn the adjusting sleeve on each rear shock absorber to the desired position with the wrench [A].

Special Tool - Steering Stem Nut Wrench: 57001-1100

○Both adjusting sleeves (left and right) must be turned to the same relative position.

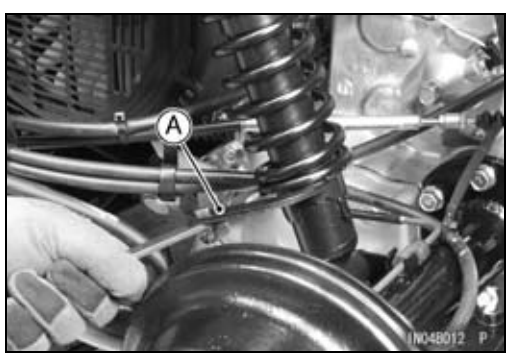

⚠ WARNING

If both adjusters are not adjusted equally, handling may be impaired and a hazardous condition may result. Be sure the adjusters are set equally.

Struts and Rear Shock Absorbers

Rear Shock Absorber Removal

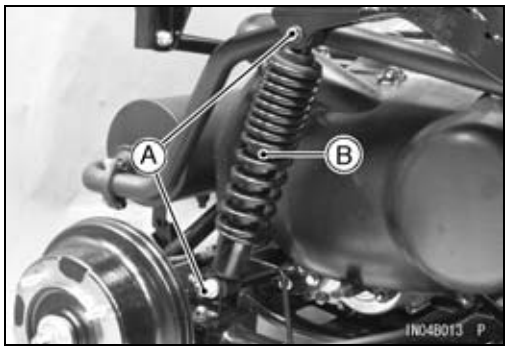

- Remove:
  Rear Wheel (see Wheels/Tires chapter)
- Remove:
  Rear Shock Absorber Mounting Bolts and Nuts [A] (while moving the frame up or down with a jack)
  Rear Shock Absorber [B]

Rear Shock Absorber Installation

- Install the rear wheel temporarily and ground it to load the suspension.
- Tighten:

Torque - Rear Shock Absorber Mounting Nuts: 54 N·m (5.5 kgf·m, 40 ft·lb)

Rear Shock Absorber Inspection

- Visually inspect the shock absorber for breaks or distortion.

★If the shock absorber is damaged in any way, replace it.

- Check for oil leakage at the shock absorber damper unit.

★If oil leakage is noted, the shock absorber should be replaced to renew the oil seal.

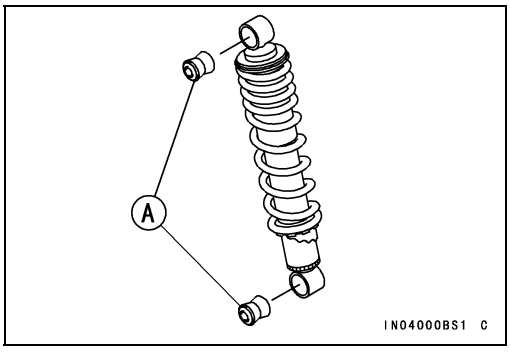

- Visually inspect the rubber bushings [A] in the upper and/or lower mountings of the rear shock absorber.

★If they are worn, cracked, hardened, or otherwise damaged, replace them with new ones.

Front Suspension Arms

Front Suspension Arm Removal

- Remove:
  Front Cargo Compartment (see Frame chapter)
  Front Wheel (see Wheels/Tires chapter)
  Brake Panel Assembly (see Brakes chapter)
  Tie-rod End [A] (see Knuckle Removal in the Steering chapter)

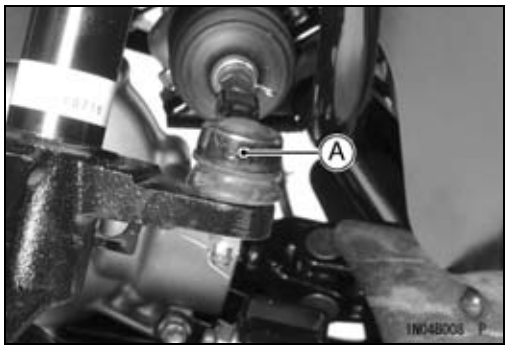

- Remove:
  Cotter Pin [A]
  Strut Clamp Bolt and Nut [B]

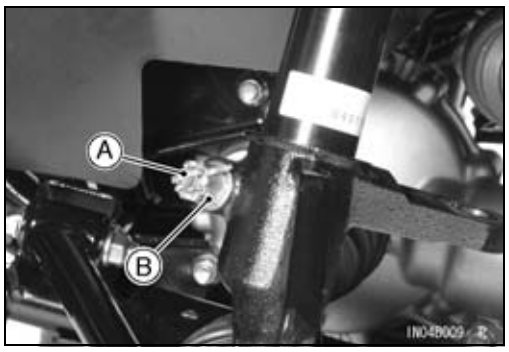

- Remove:
  Suspension Arm Bolts [A]
  Front Suspension Arm Joint Nut [B]
  Suspension Arm with Steering Knuckle [C]

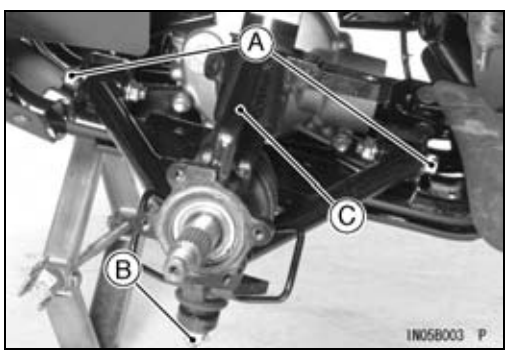

- Install a suitable nut [A] on the stud of the joint end and tap the nut to free the joint from the suspension arm [B].

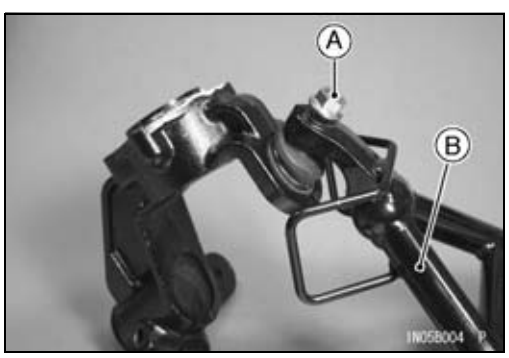

Front Suspension Arms

Front Suspension Arm Installation

- Replace the front suspension arm pivot nuts with new ones.
- Clean the sealing surface and the tapered portion of the steering knuckle joint and the tapered hole of the front suspension arm, or the tapers will not fit snugly.
- Install:
  Front Suspension Arm Joint Boot Sealing Surface [A]

  Good [B] **Bad [C]**

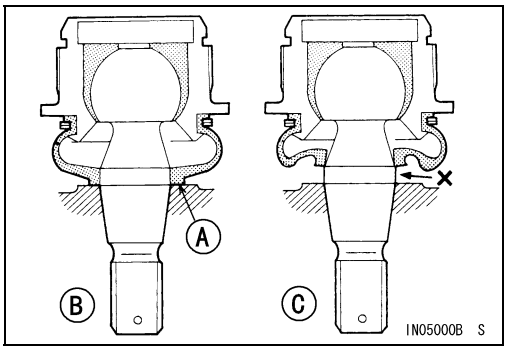

- When the front suspension arm pivot bolts are tightened, install the arm joint in the steering knuckle to position the arm within its operating angle.
- Tighten:

Torque - Front Suspension Arm Pivot Bolts: 88 N·m (9.0 kgf·m, 65 ft·lb)
Front Suspension Arm Joint Nut: 78 N·m (8.0 kgf·m, 58 ft·lb)

- Insert a new cotter pin [A].

NOTE

○*When inserting the cotter pin, if the slots in the nut do not align with the cotter pin hole in the joint, tighten the nut clockwise [B] up to next alignment.*
○*It should be within 30 degrees.*
○*Loosen once and tighten again when the slit goes past the nearest hole.*

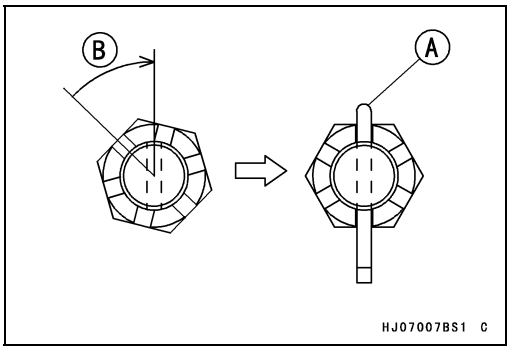

- Bend the cotter pin [A] over the nut [B].

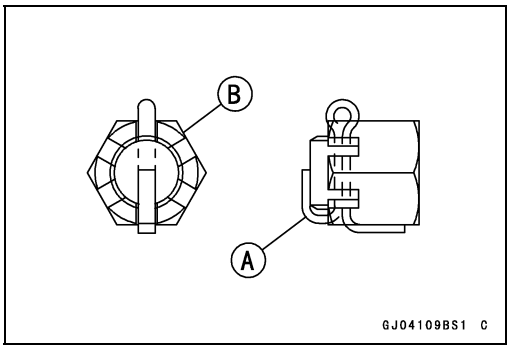

Front Suspension Arm Inspection

- Visually inspect the front suspension arm [A] for breaks or distortion.

★If the front suspension arm is damaged in any way, replace it.

- Check the rubber bushings [B] in the pivots.

★Replace any bushings that are worn, cracked, hardened, or otherwise damaged.

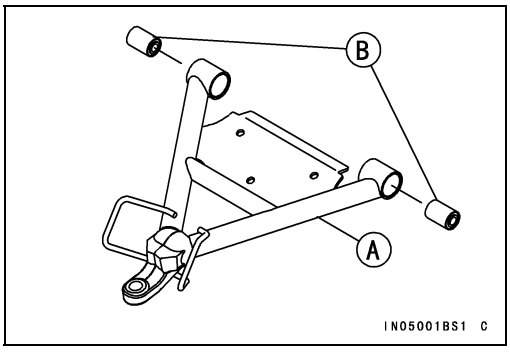

Swingarm

Swingarm Removal

- Remove:
  Cargo Bed (see Frame chapter)
  Transmission Case (see Transmission chapter)
  Engine (see Engine Removal/Installation chapter)
  Brake Pipes [A] (see Brakes chapter)
  Retainer [B]

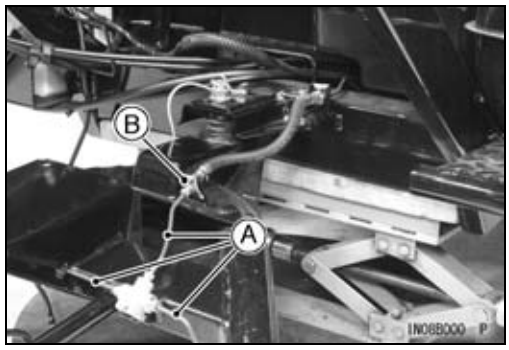

- Remove:
  Bolt [A] and Nut
  Swingarm Rod [B]

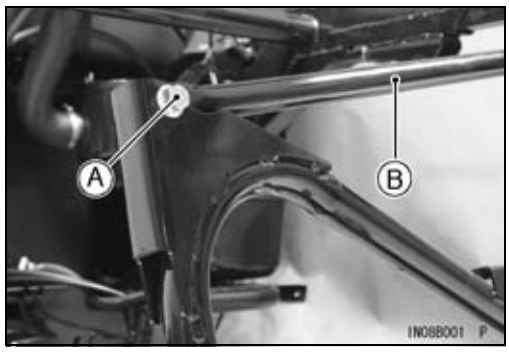

- Remove:
  Bolt [A] and Connecting Wire [B]
  Cotter Pin [C]
  Nut [D] and Washer

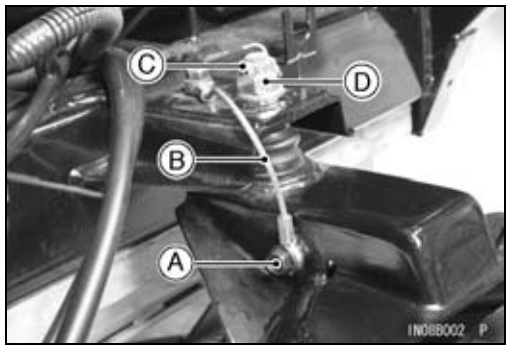

- Install a suitable nut [A] on the swingarm joint [B] and tap the nut to free the joint from the frame [C].
- Remove:
  Swingarm [D]

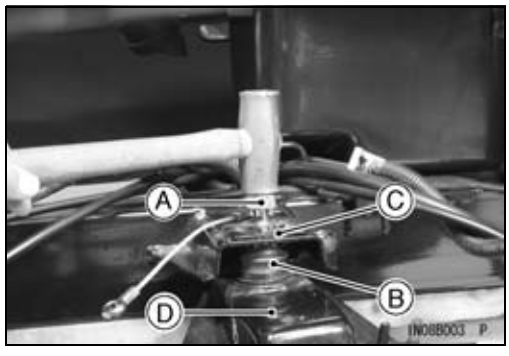

Swingarm Installation

○When install the rubber bushings [A] in the swingarm rod [B], lubricate them with a soap and water solution

NOTICE
Do not use engine oil or petroleum distillates to lubricate the bushings because they will deteriorate the rubber.

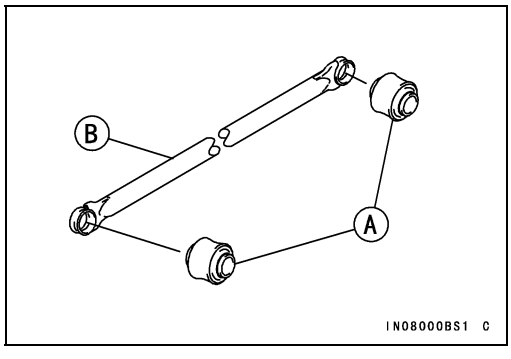

Swingarm

- Replace the swingarm rod nuts with new ones.
- Clean the sealing surface and the taper surface [A] of the frame bracket and shank [B] of the swingarm joint, or the tapers will not fit snugly.
- Install:
  Swingarm Joint Nut and Washer
  Swingarm Rod Bolt and Nut
- Tighten:

Torque - Swingarm Joint Nut: 54 N·m (5.5 kgf·m, 40 ft·lb)
Swingarm Rod Bolt: 50 N·m (5.1 kgf·m, 37 ft·lb)

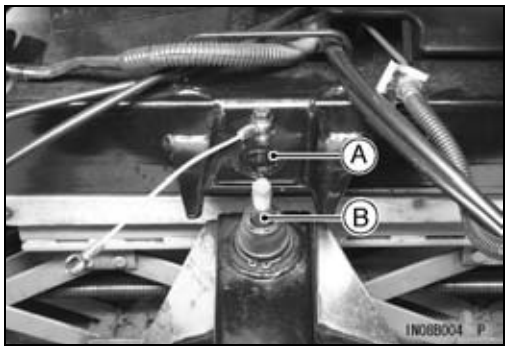

- Install:
  Bolt and Connecting Wire

Swingarm Inspection

- Visually inspect the swingarm [A] for breaks or distortion.

★If the swingarm is damaged in any way, replace it.

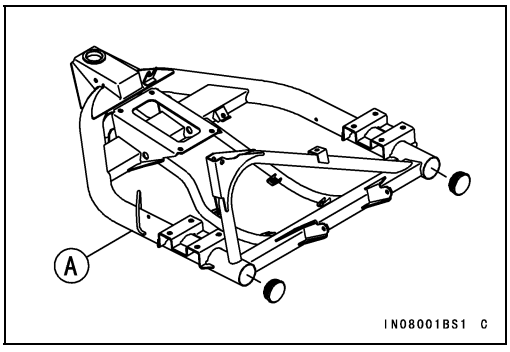

- Visually inspect the rubber bushings [A] in the swingarm rod [B].

★If they are worn, cracked, hardened, or otherwise damaged, replace them with new ones.

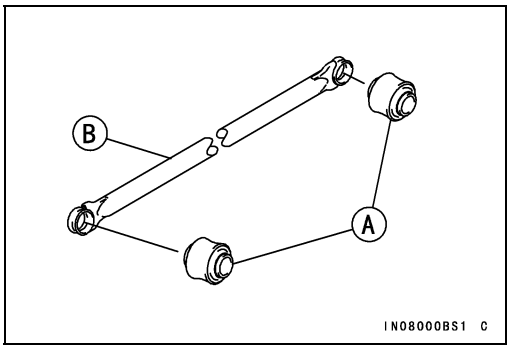

Swingarm Joint Replacement

- Remove:
  Swingarm (see Swingarm Removal)
  Circlip [A]

Special Tool - Outside Circlip Pliers [B]: 57001-144

○Using a press, remove the swingarm joint [C].

- Replace:
  Swingarm Joint
  Circlip
- Using a press, install the swingarm joint.
- Install:
  Circlip

Special Tool - Outside Circlip Pliers: 57001-144

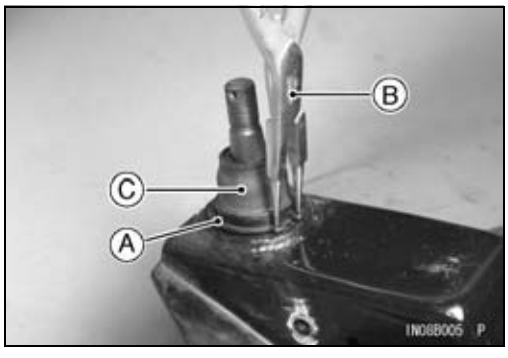

Steering

Table of Contents

Exploded View 14-2
Specifications 14-4
Special Tools 14-5
Steering Wheel and Main Shaft Assembly 14-6
Steering Wheel Free Play Inspection 14-6
Steering Wheel Centering 14-6
Steering Wheel and Steering Shaft Removal 14-6
Steering Wheel and Steering Shaft Installation 14-7
Steering Gear Assembly 14-8
Steering Gear Assembly Removal 14-8
Steering Gear Assembly Installation 14-8
Steering Gear Preload Adjustment 14-9
Tie-rod Length Adjustment 14-10
Dust Boot Inspection 14-10
Steering Knuckles 14-11
Steering Knuckle Removal 14-11
Steering Knuckle Installation 14-11
Knuckle Bearing Removal 14-12
Knuckle Bearing Installation 14-12
Knuckle Joint Removal 14-12
Knuckle Joint Installation 14-13

Exploded View

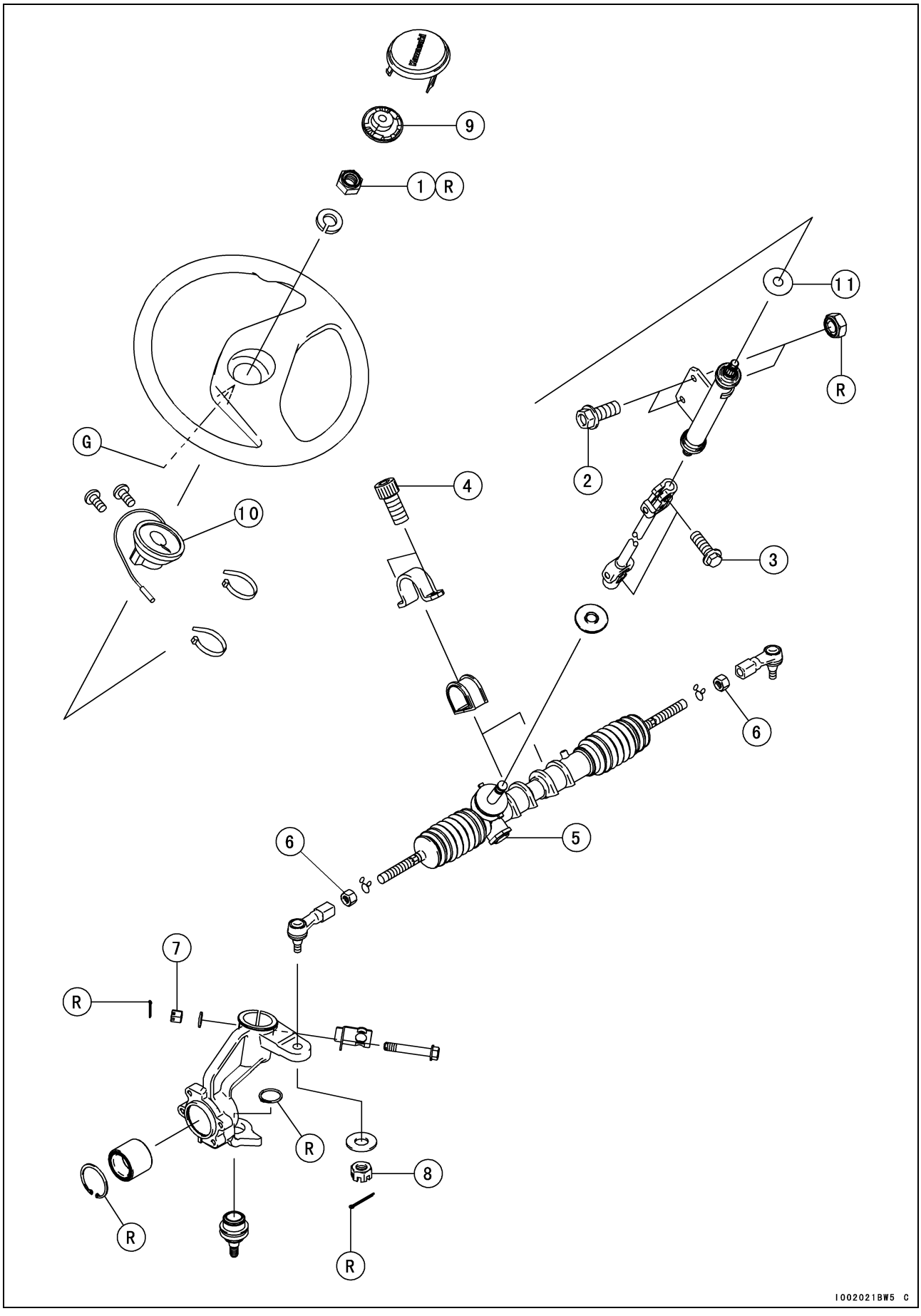

Exploded View

No.	Fastener	Torque			Remarks
		N·m	kgf·m	ft·lb	
1	Steering Wheel Mounting Nut	54	5.5	40	R
2	Main Shaft Mounting Bolts	34	3.5	25	
3	Intermediate Shaft Clamp Bolts	25	2.5	18	
4	Steering Gear Assembly Bracket Bolts	54	5.5	40	
5	Rack Guide Spring Cap Locknut	39	4.0	29	
6	Tie-rod Locknuts	44	4.5	32	
7	Strut Clamp Nuts	98	10	72	
8	Tie-rod End Nuts	34	3.5	25	

9. Horn Switch (KAF400-B1, B6 ~ Europe Models)
10. Horn Switch Contact (KAF400-B1, B6 ~ Europe Models)
11. Other than Europe Model

G: Apply grease.
R: Replacement Parts

Specifications

Item	Standard	Service Limit
Steering Wheel		
Steering Wheel Free Play	0 ~ 20 mm (0 ~ 0.79 in.)	– – –
Steering Gear Assembly		
Tie-Rod Length (Distance Between Flange End and Locknut)	about 30 mm (1.18 in.)	– – –

Special Tools

Inside Circlip Pliers:
57001-143

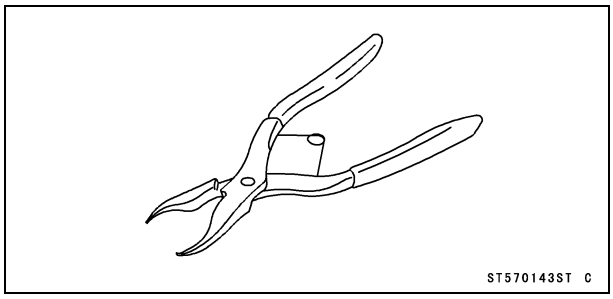

Outside Circlip Pliers:
57001-144

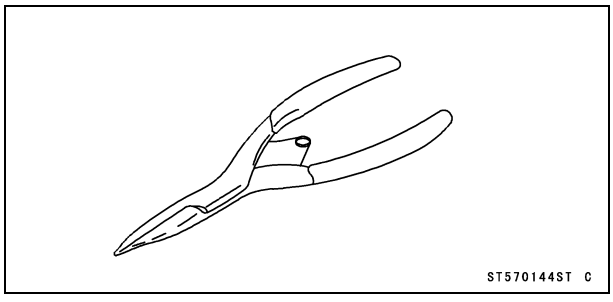

Bearing Driver Set:
57001-1129

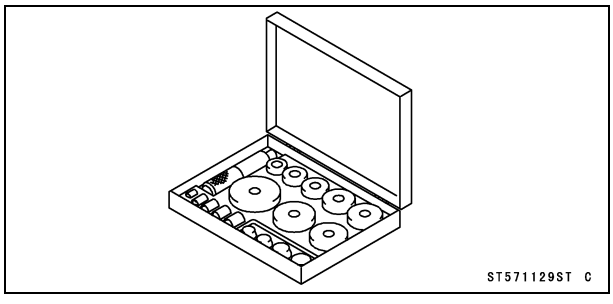

Knuckle Joint Remover:
57001-1619

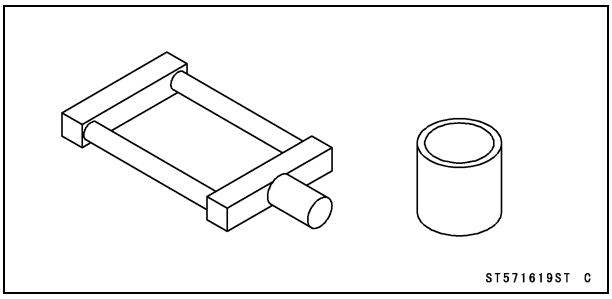

Knuckle Joint Driver:
57001-1640

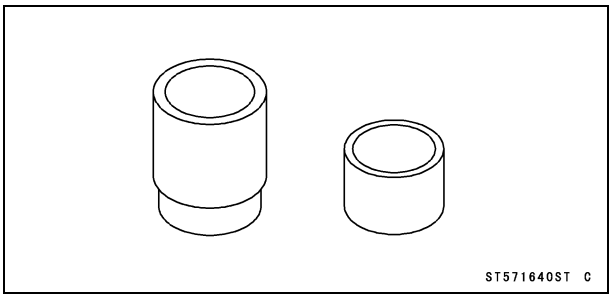

Steering Wheel and Main Shaft Assembly

Steering Wheel Free Play Inspection

- Refer to Steering Inspection in the Periodic Maintenance chapter.

Steering Wheel Centering

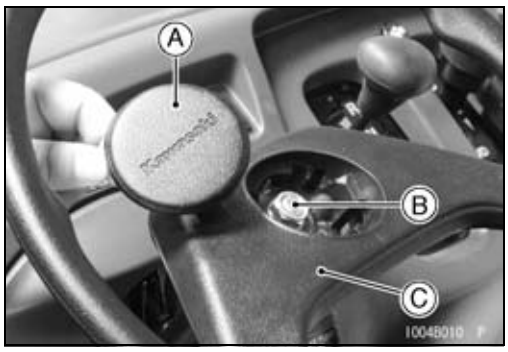

- Test ride the vehicle.

★If the steering wheel is not straight when the vehicle is traveling in a straight line, do the following.

- Check the tie-rod length and adjust it if necessary (see Wheels/Tires chapter).
- Remove the cap [A] and the horn switch (Europe model), and then loosen the steering wheel mounting nut [B].
- Push the vehicle in a straight line with no one aboard, and stop it without turning the steering wheel.
- Remount the steering wheel [C] so that it is straight ahead.

Torque - Steering Wheel Mounting Nut: 54 N·m (5.5 kgf·m, 40 ft·lb)

Steering Wheel and Steering Shaft Removal

- Remove (see above):
  Front Cargo Compartment (see Frame chapter)
  Wheel Cap and Horn Switch (Europe model)
  Steering Wheel Mounting Nut and Spring Washer
  Steering Wheel
- Remove (Europe model):
  Screws and Horn Switch Contact
  Two Straps of Horn Switch Body Lead

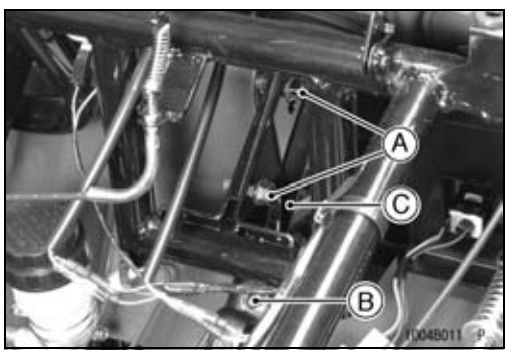

- Remove:
  Main Shaft Mounting Bolts, Washers and Nuts [A]
  Main Shaft Clamp Bolt [B]
- Lift the main shaft [C].

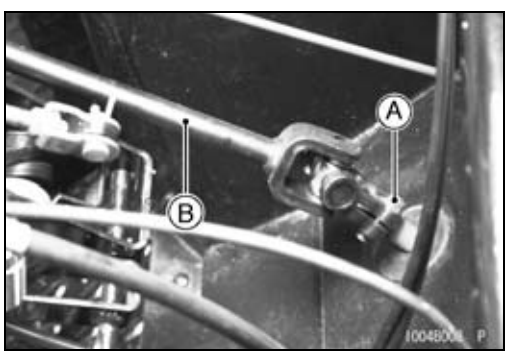

- Remove:
  Steering Gear Shaft Clamp Bolt [A]
- Lift the intermediate shaft [B].

Steering Wheel and Main Shaft Assembly

Steering Wheel and Steering Shaft Installation

- Grease:
  Dust Cover Lips [A]

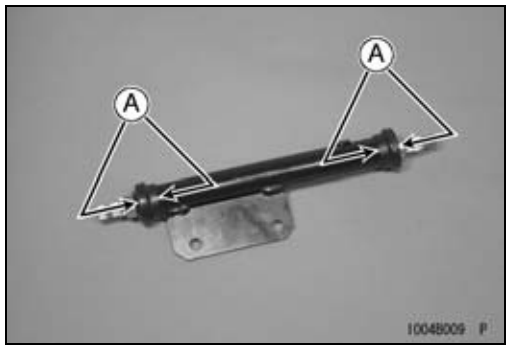

- Connect the intermediate shaft [A] to the main shaft [B] with the steering gear pinion in any position.
- Mount the steering wheel on the main shaft temporarily.
- Adjust:
  Steering Wheel Position Adjustment
  Steering Wheel Centering
- Tighten:

  Torque - Intermediate Shaft Clamp Bolts [C]: 25 N·m (2.5 kgf·m, 18 ft·lb)
  Steering Wheel Mounting Nut: 54 N·m (5.5 kgf·m, 40 ft·lb)

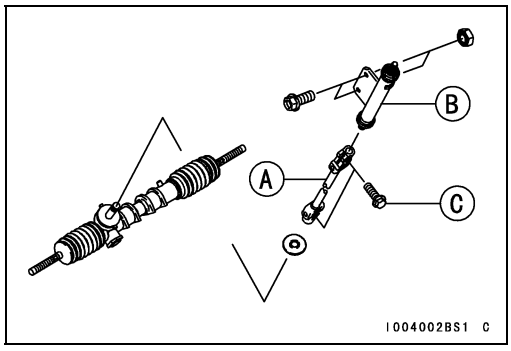

(Europe model)
- Install the horn switch [A] as shown.

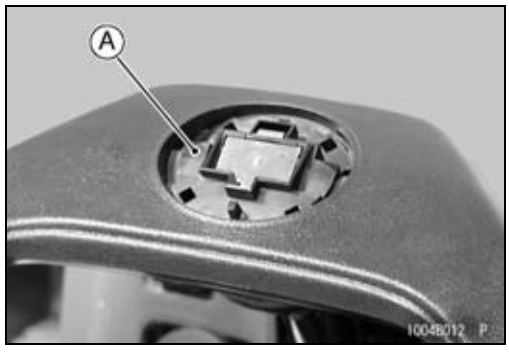

Steering Gear Assembly

Steering Gear Assembly Removal

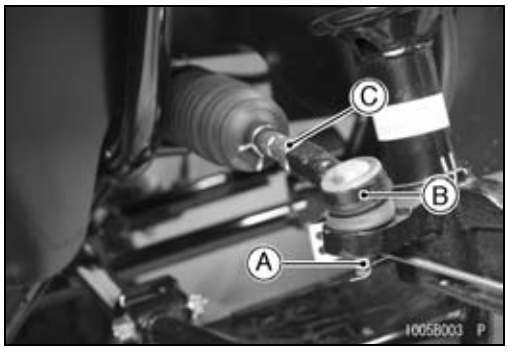

- Remove:
  Front Cargo Compartment (see Frame chapter)
  Front Wheels (see Wheels/Tires chapter)
  Steering Wheel and Steering Shaft (see Steering Wheel and Steering Shaft Removal)
  Cotter Pins, Tie-rod End Nuts [A] and Tie-rod Ends [B] from Steering Knuckles

○Install a suitable nut on the stud of the tie-rod end joint and tap the nut to free the joint from the steering knuckle.

NOTICE
Do not loosen the tie-rod end locknuts [C], or the toe-in of the front wheels will be changed.

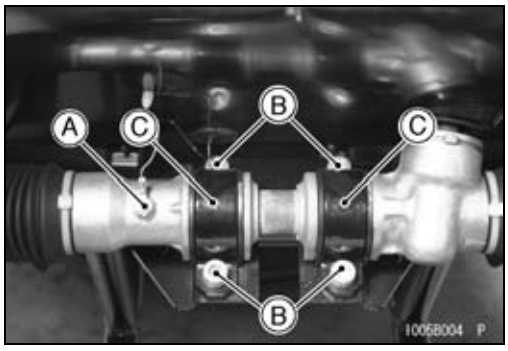

- Remove (front view):
  Screw [A] and Horn Ground Lead Terminal
  Steering Gear Assembly Bracket Bolts [B] and Brackets [C]

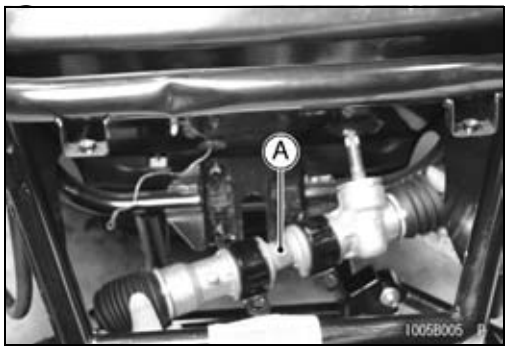

- Remove:
  Steering Gear Assembly [A]

Steering Gear Assembly Installation

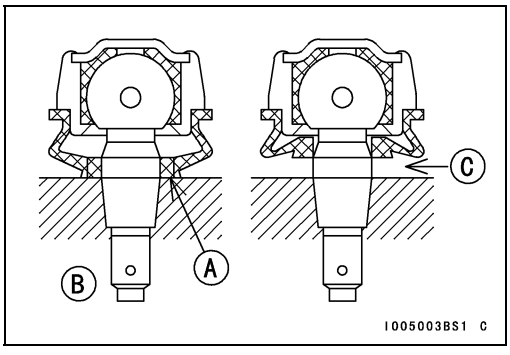

- Adjust if necessary:
  Steering Gear Preload Adjustment
  Tie-rod Length Adjustment
- Clean the tapered portion of the tie-rod end joint and the tapered hole of the steering knuckle, or the tapers will not fit snugly.
- Grease:
  Tie-rod End Joint Boot Sealing Surfaces [A]
  [B] Good
  [C] Bad

- Tighten:

Torque - Steering Gear Assembly Bracket Bolts: 54 N·m (5.5 kgf·m, 40 ft·lb)
Tie-rod End Nuts: 34 N·m (3.5 kgf·m, 25 ft·lb)

Steering Gear Assembly

● Insert a new cotter pin [A].

NOTE

○*When inserting the cotter pin, if the slots in the nut do not align with the cotter pin hole in the clamp bolt or joint, tighten the nut clockwise [B] up to next alignment.*
○*It should be within 30 degrees.*
○*Loosen once and tighten again when the slit goes past the nearest hole.*

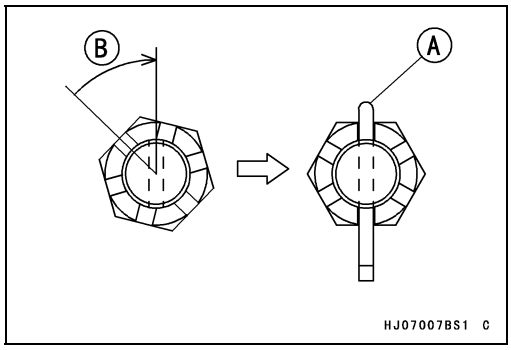

● Bend the cotter pin [A] over the nut [B].

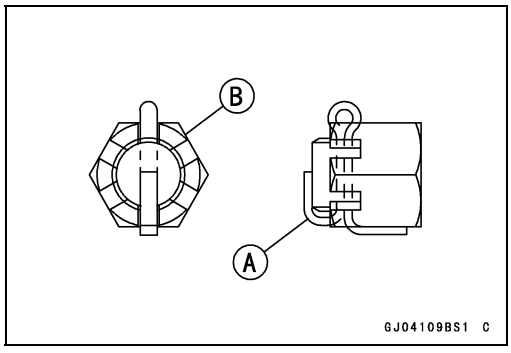

○Tighten the steering gear assembly bracket bolts evenly.
● Check:
Toe-in of Front Wheels (see Wheels/Tires chapter)
● Tighten:

Torque - Tie-rod Locknuts: 44 N·m (4.5 kgf·m, 32 ft·lb)

NOTE

○*Tie-rod locknuts on a new steering gear assembly are not fully tightened. Be sure to tighten them to the specified torque.*

Steering Gear Preload Adjustment

● Loosen the locknut [A].
● Tighten the rack guide spring cap [B] to 12.3 N·m (1.3 kgf·m, 109 in·lb) of torque.
● Back off the cap 60 ~ 70°.
● Tighten the locknut while preventing the cap from turning.

Torque - Rack Guide Spring Cap Locknut: 39 N·m (4.0 kgf·m, 29 ft·lb)

Pinion [C]
Rack [D]
Rack Guide [E]
Spring [F]
Top [G]

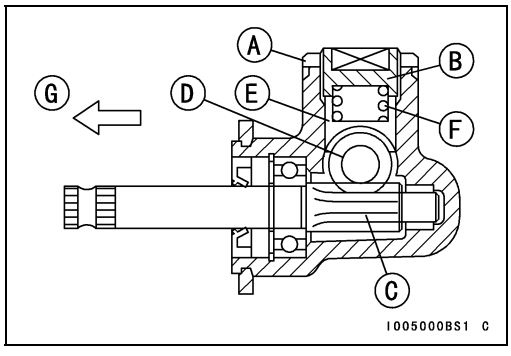

Steering Gear Assembly

Tie-rod Length Adjustment

- Refer to Toe-in Adjustment in the Wheels/Tires chapter.
  Tie-rod Length [A]

Dust Boot Inspection

- Refer to the Steering in the Periodic Maintenance chapter.

Steering Knuckles

Steering Knuckle Removal

- Remove the steering knuckle together with the front suspension arm (see Front Suspension Arm Removal in the Suspension chapter).
- Install a suitable nut [A] on the stud of the tie-rod end joint [B] and tap the nut to free the joint from the steering knuckle [C].

○The steering knuckle comes off the front suspension arm [D].

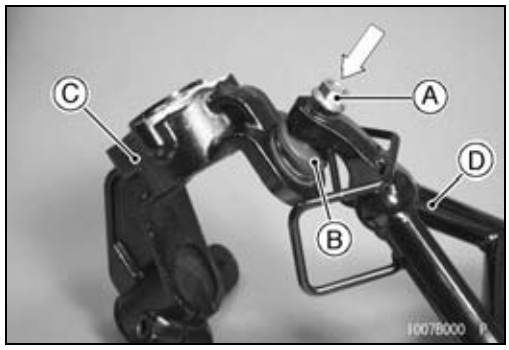

Steering Knuckle Installation

- Check the joint boot [A] is not torn, worn, deteriorated, or is leaking grease.

★If it is found, replace the knuckle.

- Using a cleaning fluid, clean off any oil or dirt on the taper surface [B] of the knuckle joint and dry it with a clean cloth.
- Using a cleaning fluid, clean off any oil or dirt on the taper surface [C] in the front suspension arm [D] and dry it with a clean cloth.

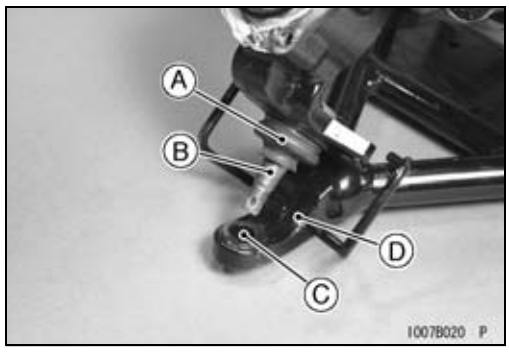

- Grease:
  Front Suspension Arm Joint Boot Sealing Surfaces [A]
  [B] Good
  [C] Bad
- Tighten:

Torque - Strut Clamp Nuts: 98 N·m (10 kgf·m, 72 ft·lb)
Front Suspension Arm Joint Nut: 78 N·m (8.0 kgf·m, 58 ft·lb)
Tie-rod End Nuts: 34 N·m (3.5 kgf·m, 25 ft·lb)

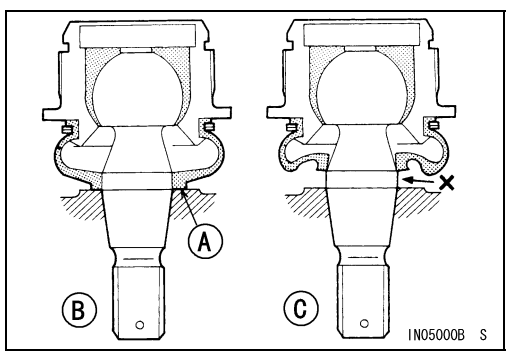

- Insert a new cotter pin [A].

NOTE

○*When inserting the cotter pin, if the slots in the nut do not align with the cotter pin hole in the clamp bolt or joint, tighten the nut clockwise [B] up to next alignment.*
○*It should be within 30 degrees.*
○*Loosen once and tighten again when the slit goes past the nearest hole.*

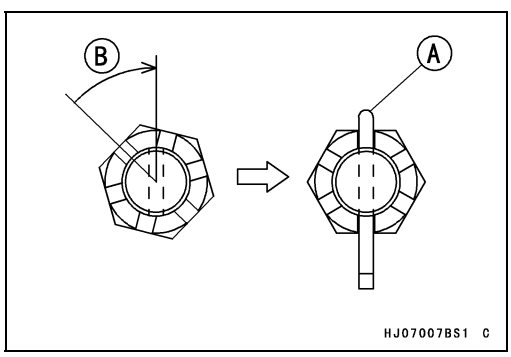

- Bend the cotter pin [A] over the nut [B].

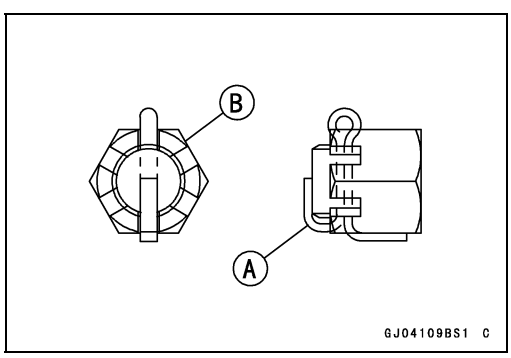

- Install the removed parts.
- Check:
  Toe-in of Front Wheels (see Wheels/Tires chapter)

Steering Knuckles

Knuckle Bearing Removal

- Remove:
  Steering Knuckle (see Steering Knuckle Removal)
  Circlip [A]

  Special Tool - Inside Circlip Pliers [B]: 57001-143

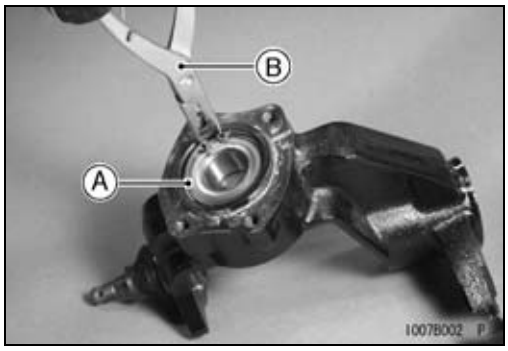

- Drive the bearing [A] out using a suitable bearing driver in the bearing driver set.

  Special Tool - Bearing Driver Set: 57001-1129

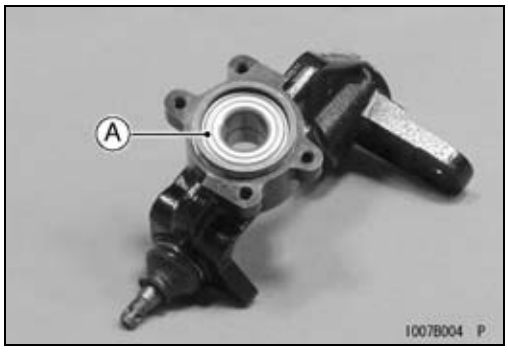

Knuckle Bearing Installation

- Press in the bearing until it is bottomed.

  Special Tool - Bearing Driver Set: 57001-1129

- Replace the circlip with a new one.

  Special Tool - Inside Circlip Pliers: 57001-143

Knuckle Joint Removal

- Remove:
  Steering Knuckle (see Steering Knuckle Removal)
  Circlip [A]

  Special Tool - Outside Circlip Pliers [B]: 57001-144

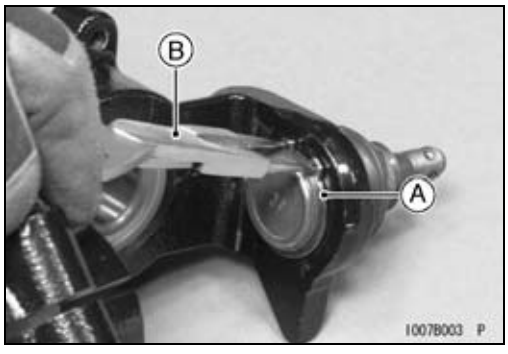

- Remove the knuckle joint [A] using a press.

  Special Tool - Knuckle Joint Remover [B]: 57001-1619

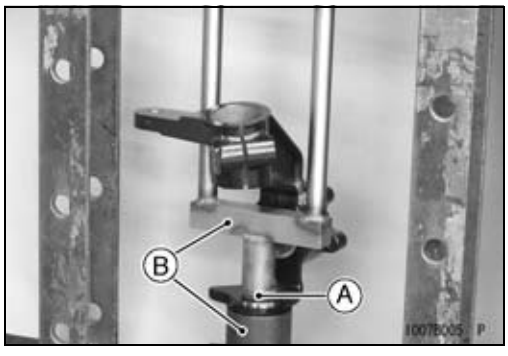

Steering Knuckles

Knuckle Joint Installation

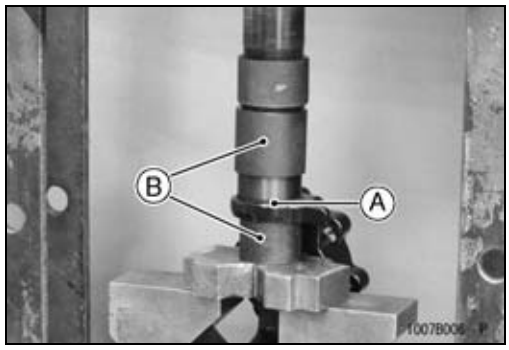

- Press the knuckle joint [A] until it is bottomed.

  Special Tool - Knuckle Joint Driver [B]: 57001-1640

- Replace the circlip with a new one.

  Special Tool - Outside Circlip Pliers: 57001-144

Frame

Table of Contents

Exploded View 15-2
Seat and Seat Belts 15-14
Seat Removal 15-14
Seat Installation 15-14
Seat Belt Removal 15-15
Seat Belt Installation 15-15
Control Panel 15-16
Control Panel Removal 15-16
Glove Compartment Removal 15-17
Front Cargo Compartment 15-18
Front Cargo Hood Removal 15-18
Front Cargo Compartment Removal 15-18
Front Cargo Compartment Installation 15-19
Cargo Bed 15-20
Cargo Bed Removal 15-20
Cargo Bed Assembly 15-21
Cargo Bed Installation 15-21
Cargo Bed Latch Position Inspection 15-22
Cargo Bed Latch Position Adjustment 15-23
Front and Rear Bars 15-24
Front Bar Removal 15-24
Front Bar Installation 15-24
Rear Bar Removal 15-24
Rear Bar Installation 15-24
Front Fender 15-25
Front Fender Installation 15-25
Guard and Cover 15-26
Front Guard Removal 15-26
Front Guard Installation 15-26
Floor Center Panel Removal 15-26
Floor Center Panel Installation 15-27
Front Final Gear Case Guard Removal 15-27
Front Final Gear Case Guard Installation 15-27
Bottom Guard Removal 15-27
Bottom Guard Installation 15-28
Transmission Case Guard Removal 15-28
Transmission Case Guard Installation 15-28
Center Cover Removal 15-28
Center Cover Installation 15-28
Side Covers Removal 15-29
Side Covers Installation 15-29
Cooling Fan Guard Removal (KAF400A9 ~ AA/B9~ BA/C9~ CA) 15-29
Cooling Fan Guard Removal (KAF400AB ~/BB ~) 15-30
Cooling Fan Guard Installation (KAF400A9 ~ AA/B9 ~ BA/C9 ~ CA) 15-30
Cooling Fan Guard Installation (KAF400AB ~/BB ~) 15-30
Guard Plate Removal 15-30
Guard Plate Installation 15-31

Exploded View

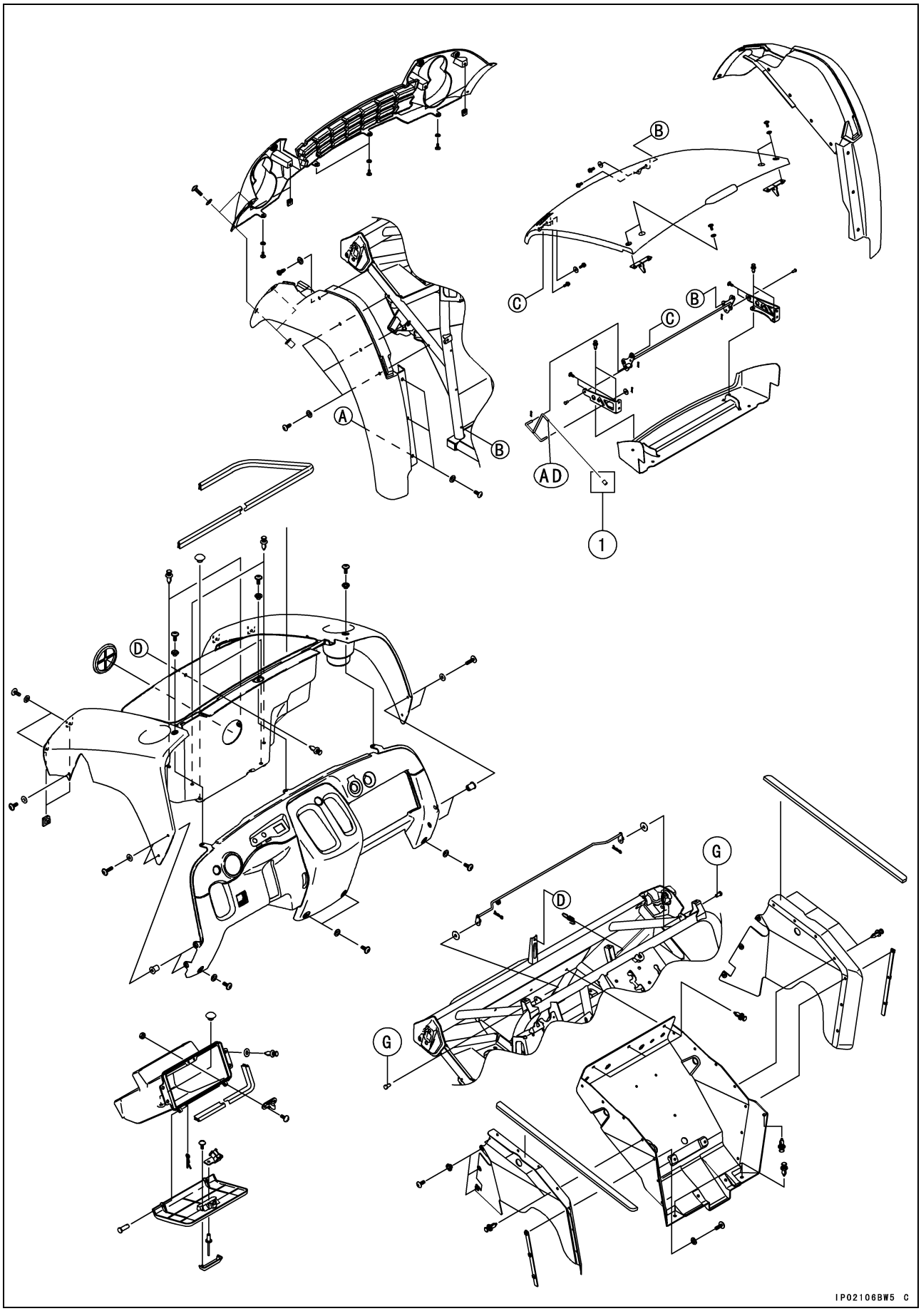

Exploded View

1. KAF400-A1 ~ AB/B1 ~ BB/C1 ~ CA

AD: Apply adhesive agent.
G: Apply grease.

Exploded View

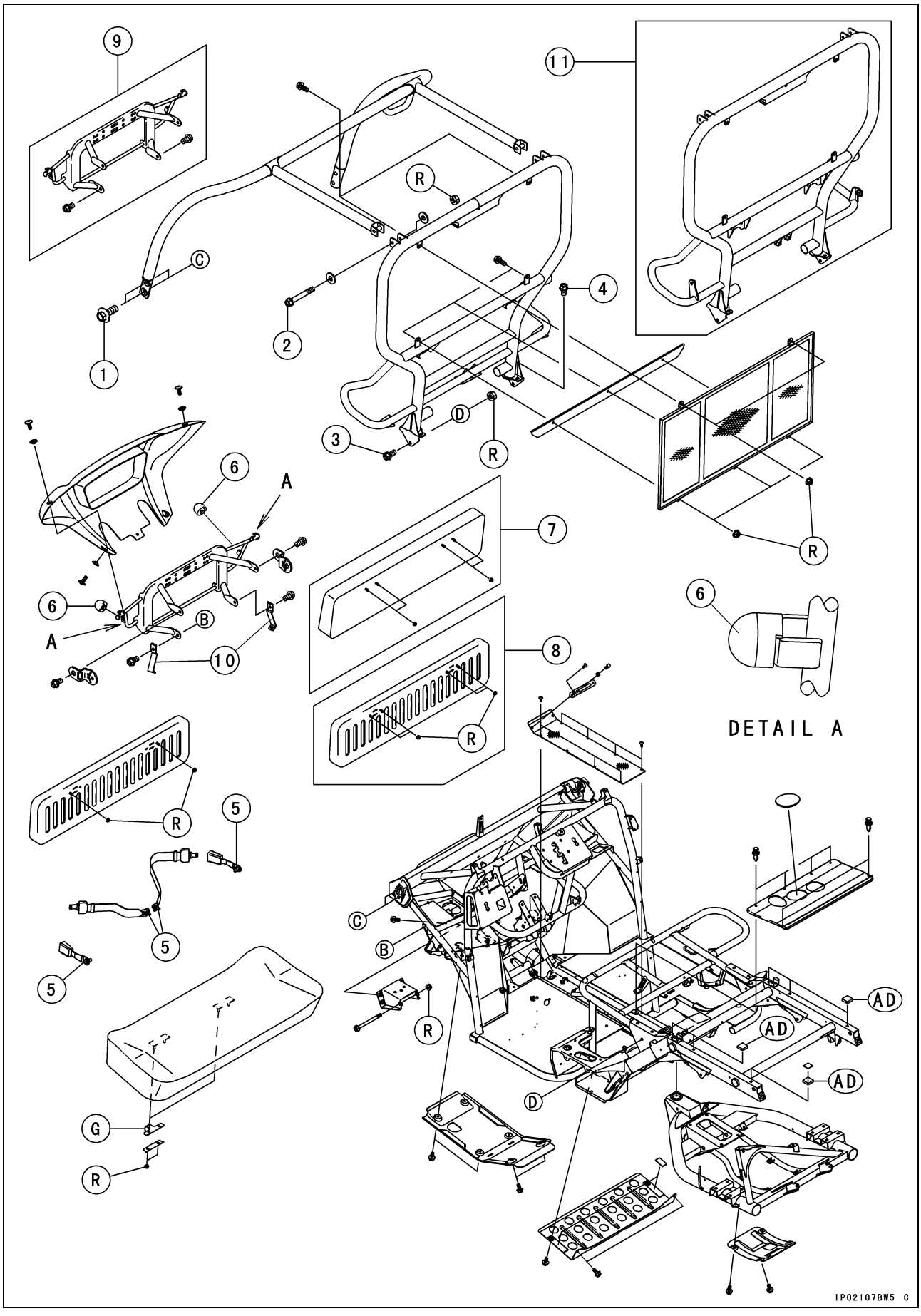

Exploded View

No.	Fastener	Torque			Remarks
		N·m	kgf·m	ft·lb	
1	Front Bar Mounting Bolts (Lower)	98	10	72	
2	Front Bar Mounting Bolts (Upper)	44	4.5	32	
3	Rear Bar Mounting Bolts (L=20 mm)	44	4.5	32	
4	Rear Bar Mounting Bolts (L=16 mm)	44	4.5	32	
5	Seat Belt Mounting Bolts	34	3.5	25	

6. Dampers (KAF400-A1 ~ A9/B1 ~ B9/C1 ~ C9)
7. KAF400-A1/B1/C1
8. KAF400A6 ~ A9/B6 ~ B9/C6 ~ C9
9. KAF400-A1 ~ A9/B1 ~ B9/C1 ~ C9
10. KAF400AA ~/BA ~/CA
11. KAF400-A1 ~ AB/B1 ~ BB/C1 ~ CA

AD: Apply adhesive agent.
G: Apply grease.
R: Replacement Parts

Exploded View

KAF400-A1 ~ A9/B1 ~ B9/C1 ~ C9

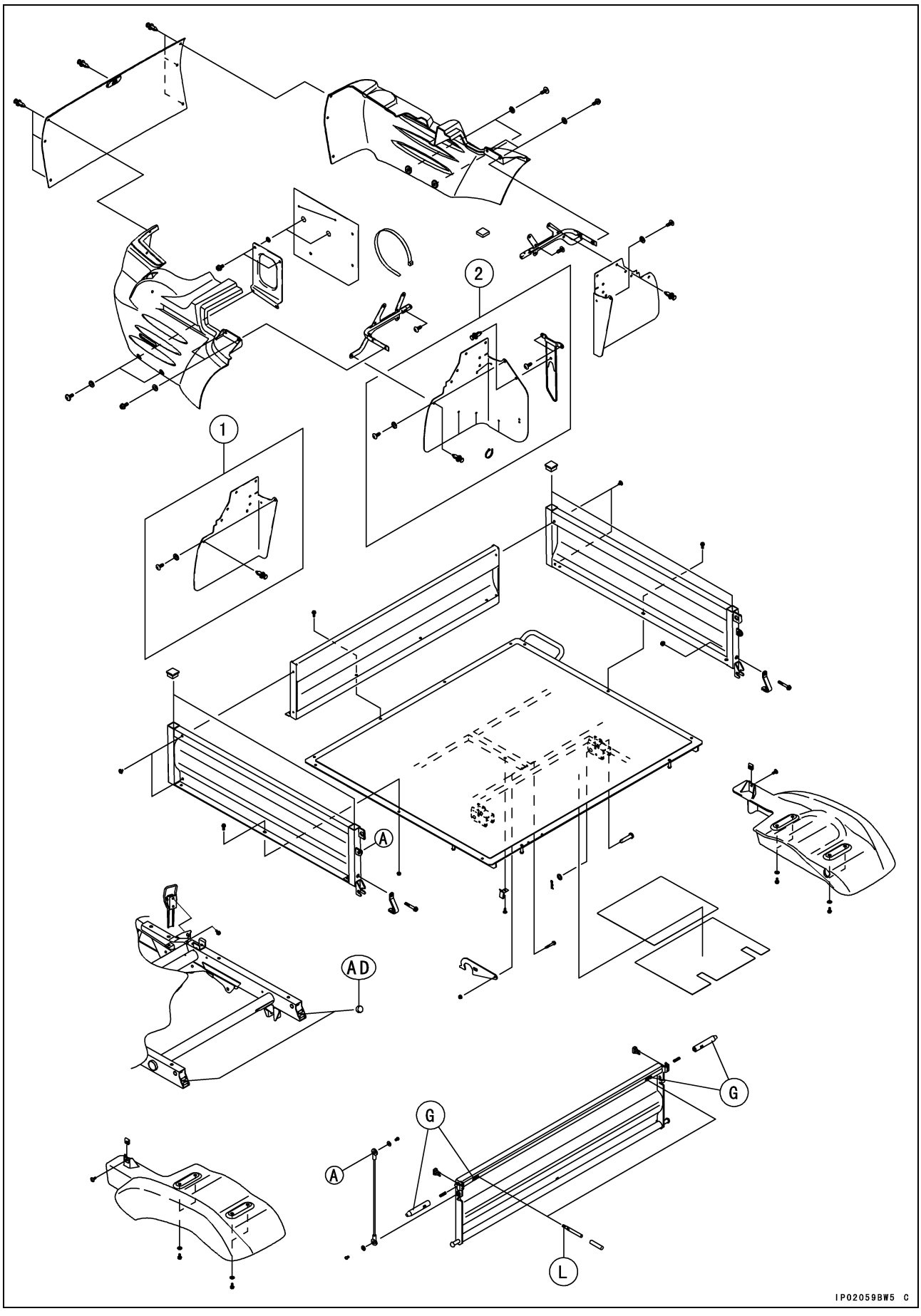

Exploded View

1. KAF400-A1/B1/C1, A6 ~ A8/B6 ~ B8/C6 ~ C8
2. KAF400A9/B9/C9

AD: Apply adhesive agent.
G: Apply grease.
L: Apply Locktite 242 Blue.

Exploded View

KAF400AA ~/BA ~/CA

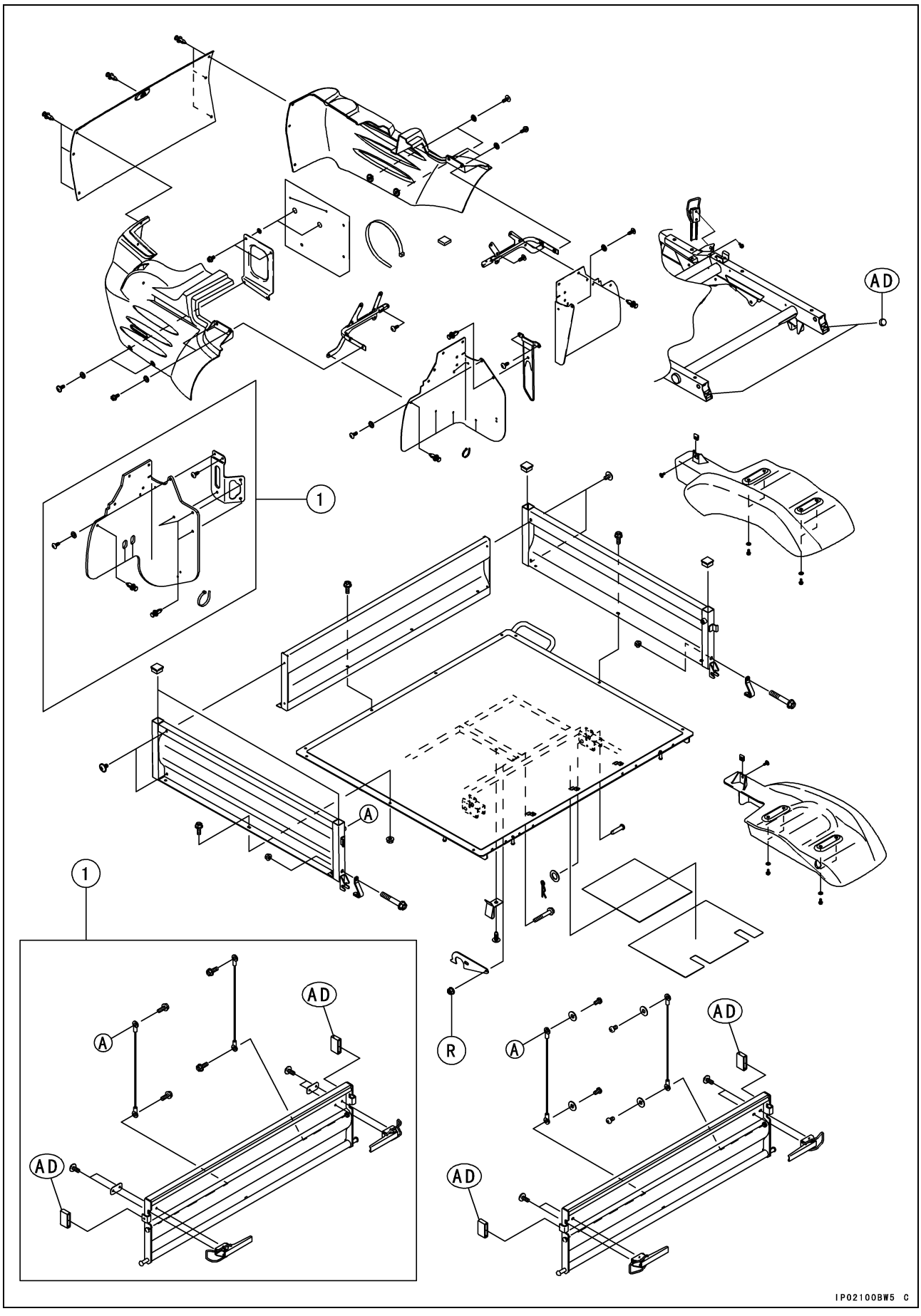

Exploded View

1. KAF400AB ~/BB ~

AD: Apply adhesive agent.
G: Apply grease.
L: Apply Locktite 242 Blue.
R: Replacement Parts

Exploded View

KAF400-C1 ~ C9

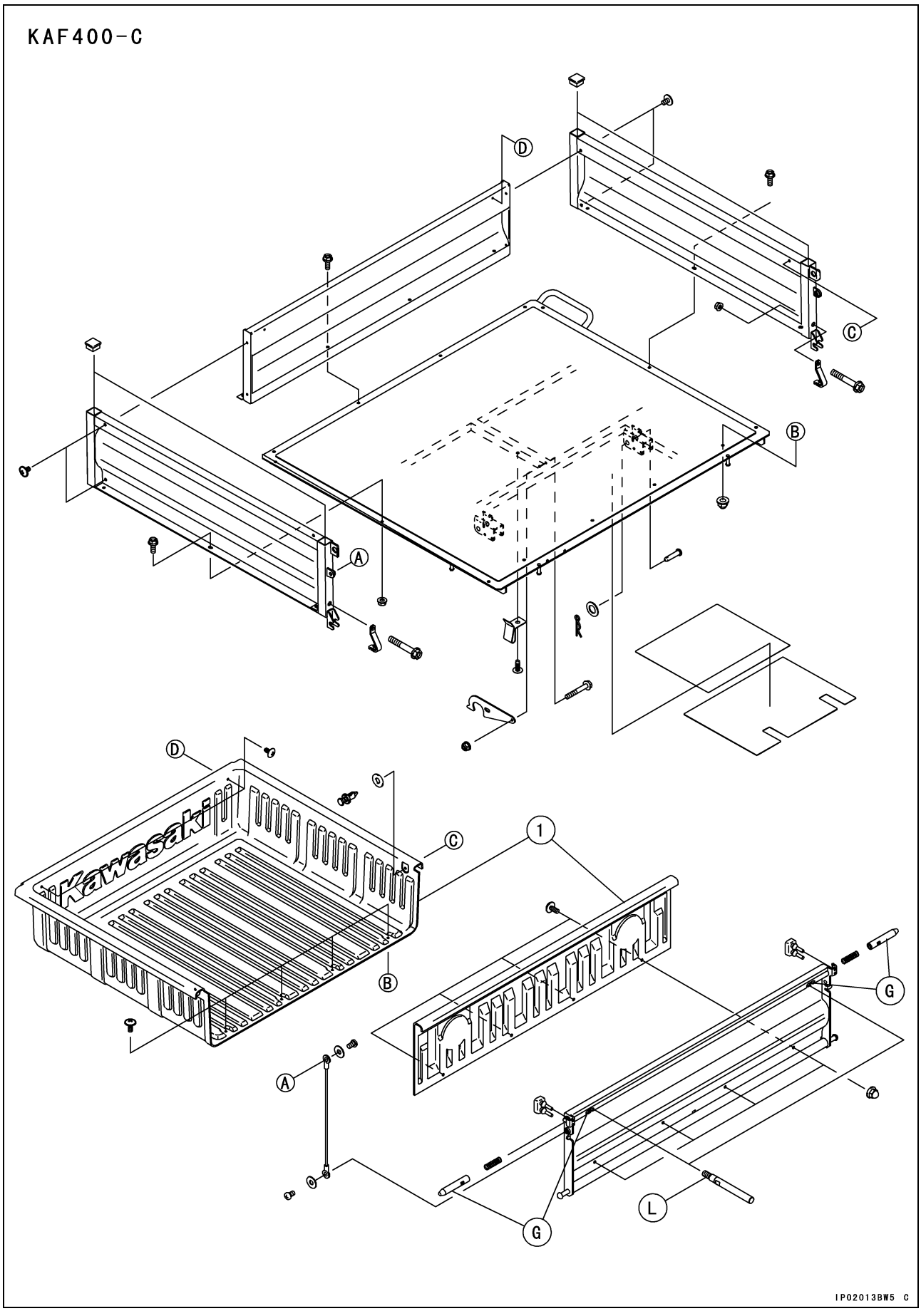

Exploded View

1. Cargo Bed Liner

G: Apply grease.

L: Apply Locktite 242 Blue.

Exploded View

KAF400CA

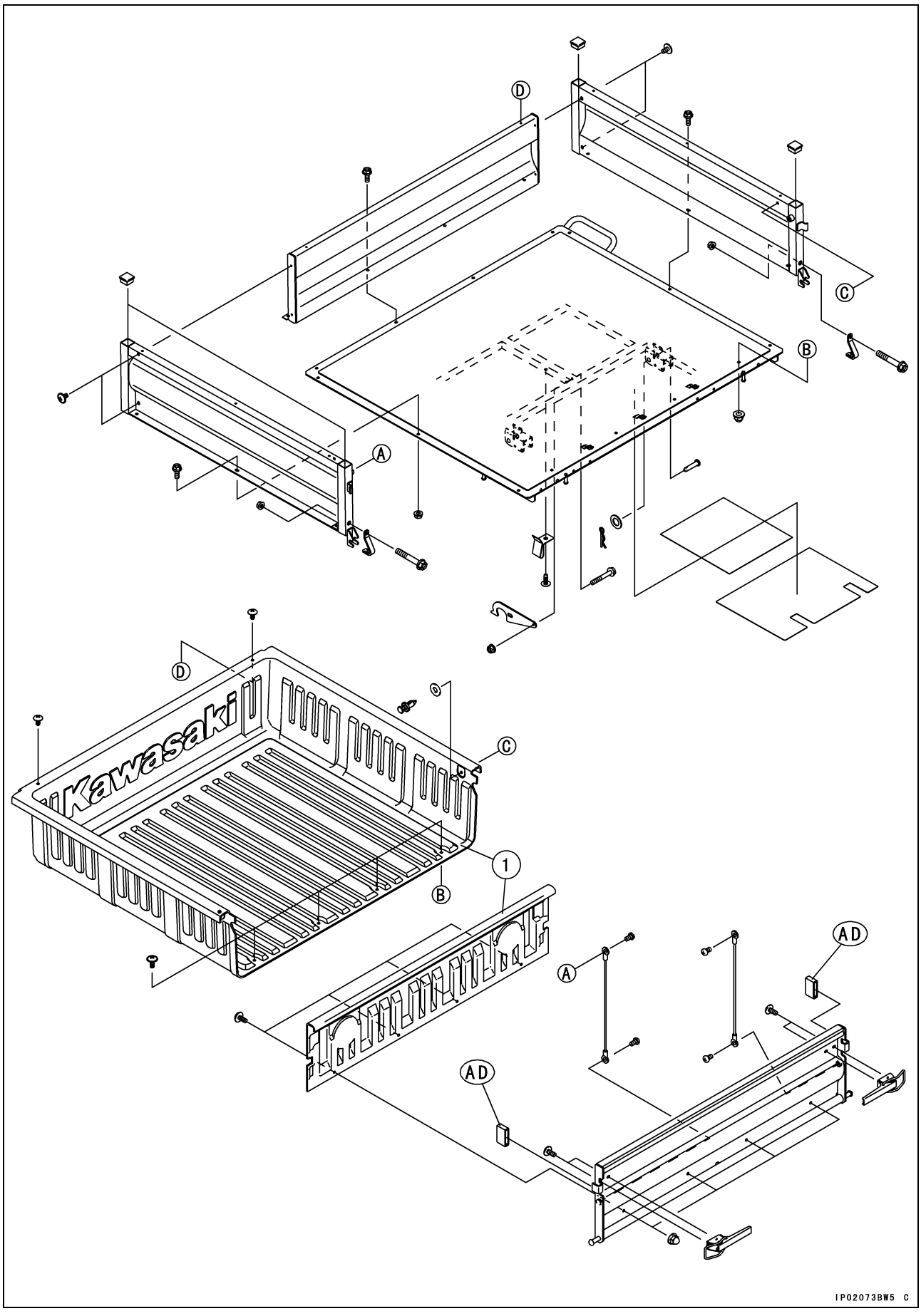

Exploded View

1. Cargo Bed Liner

AD: Apply adhesive agent.
G: Apply grease.

Seat and Seat Belts

Seat Removal

- Remove:
  Seat Bracket Nuts [A]
  Seat Brackets [B]
  Seat [C]

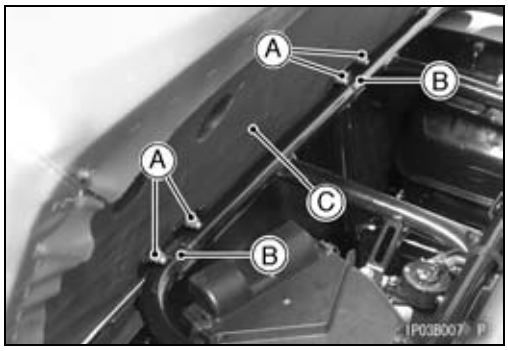

- Remove:

(KAF400-A1 ~ A9/B1 ~ B9/C1 ~ C9)
  Seat Back Mounting Nuts [A]
  Seat Back [B]

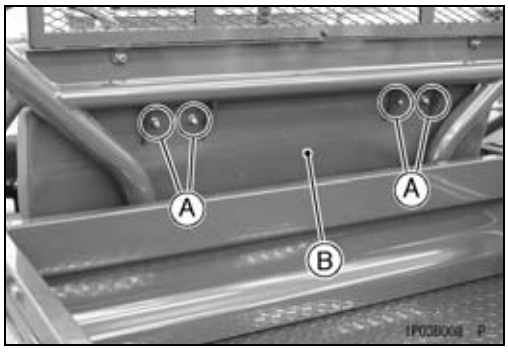

(KAF400AA ~/BA ~/CA)
  Seat Back Mounting Nuts [A]
  Seat Back [B]

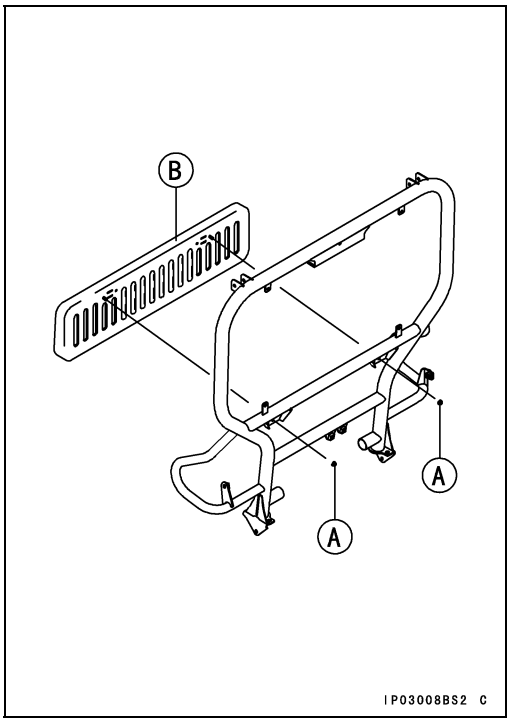

Seat Installation

- Replace the seat back mounting nuts with new ones.
- Grease:
  Seat Bracket Inside Surfaces [A]
- Touch the bracket [B] to the stopper [C] on the frame.
- Tighten each nut.

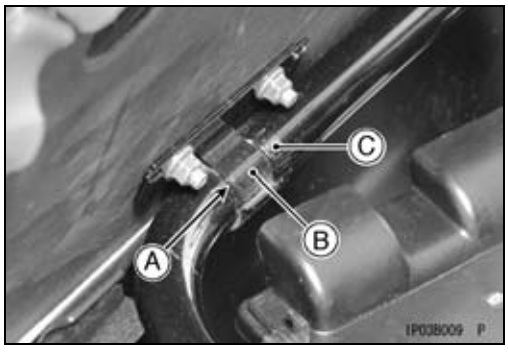

Seat and Seat Belts

Seat Belt Removal

● Remove:
Seat Belt Mounting Bolts [A]
Seat Belts [B]
Seat Belt Buckles [C]

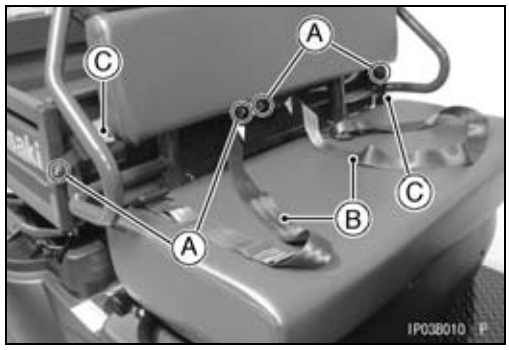

Seat Belt Installation

● Tighten:

Torque - Seat Belt Mounting Bolts: 34 N·m (3.5 kgf·m, 25 ft·lb)

(KAF400AC ~/BC ~)

● Install:
Seat Belt Mounting Bolts [A]
40° ~ 60° [B]
View C [C]

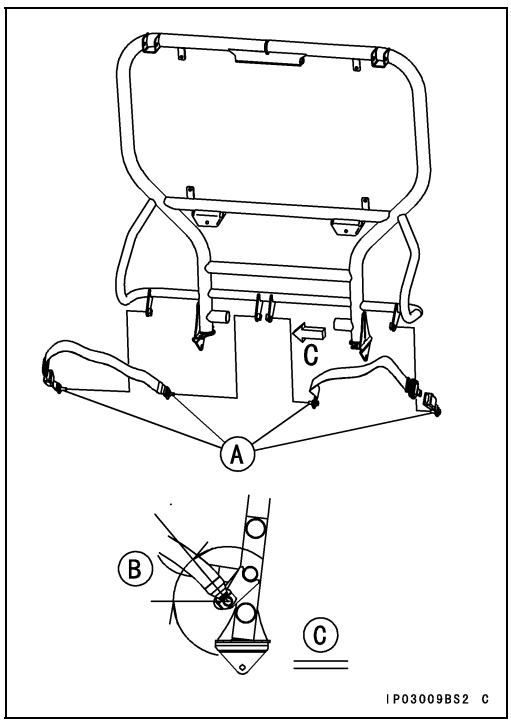

Control Panel

Control Panel Removal

- Remove:
  Front Cargo Compartment (see Front Cargo Compartment Removal)

- Disconnect:
  Ignition Switch Lead Connector [A]
  Power Outlet Connector Lead Connectors [B]

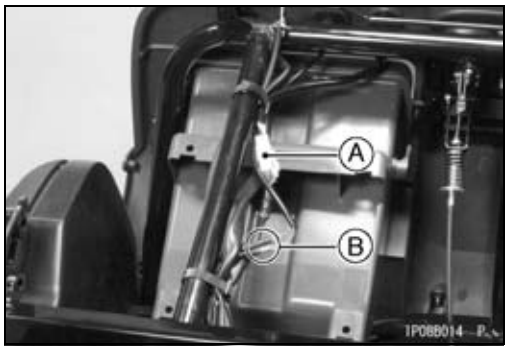

- Disconnect:
  Hour Meter Lead Connector [A]
  Oil Temperature Warning Indicator Light Lead Connectors [B]
  Parking Brake Indicator Light Lead Connector [C]
  Light Switch Lead Connector [D]

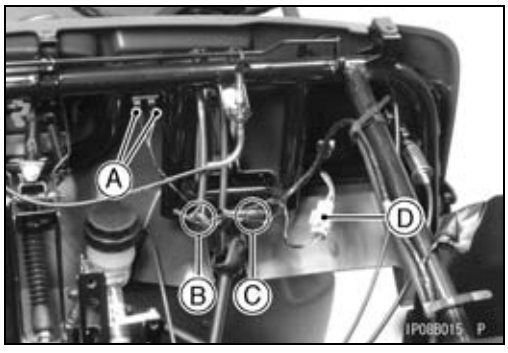

- Remove:
  Snap Pins [A] and Pins
  Glove Compartment Cover [B]

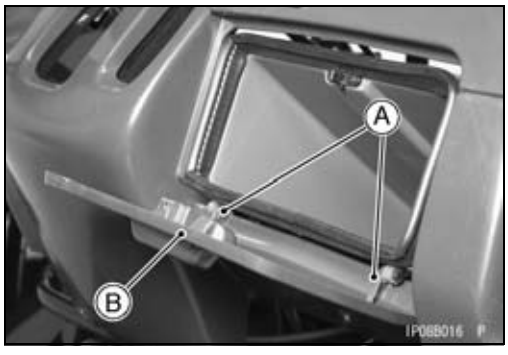

- Remove:
  Control Panel Screws [A] and Collars
  Control Panel [B]

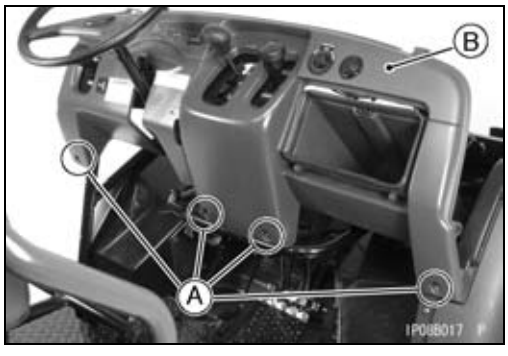

Control Panel

Glove Compartment Removal

- Remove:
  Control Panel (see Control Panel Removal)
  Screws [A]
  Glove Compartment [B]

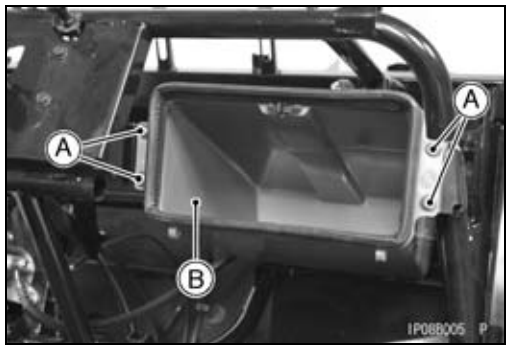

Front Cargo Compartment

Front Cargo Hood Removal

- Remove:
  Snap Pins [A]
  Washer [B]
  Mounting Pins [C]
  Lever

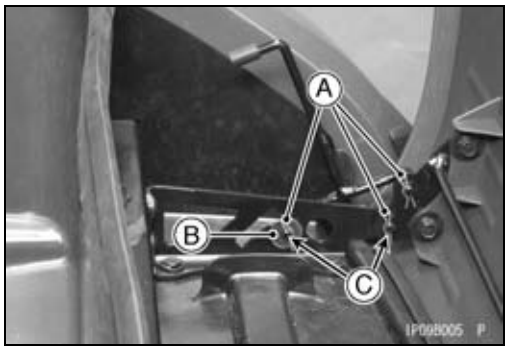

- Remove:
  Snap Pin [A]
  Mounting Pin [B]
  Front Cargo Hood [C]

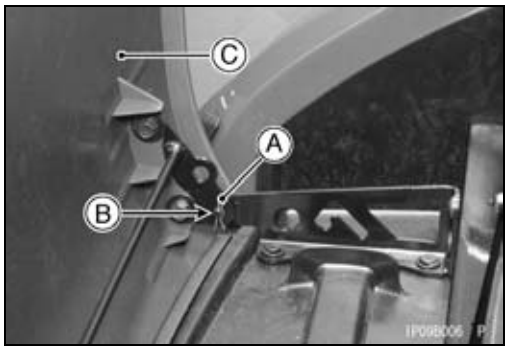

Front Cargo Compartment Removal

- Remove:
  Screws [A] and Collars

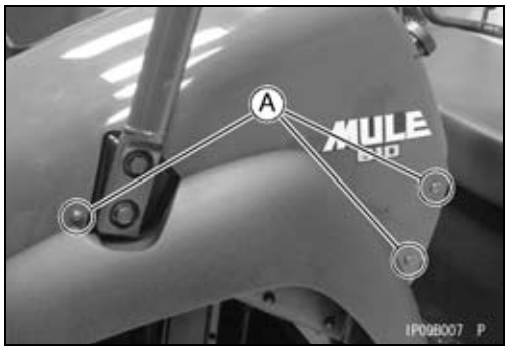

- Remove:
  Screws [A] and Collars

- Remove:
  Screws [A] and Collars
  Quick Rivet [B]

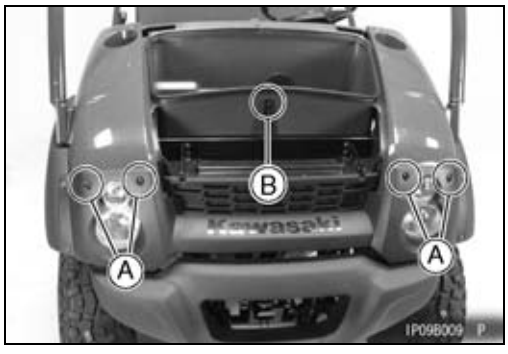

Front Cargo Compartment

- Remove:
  Quick Rivet [A]
  Front Cargo Compartment [B]

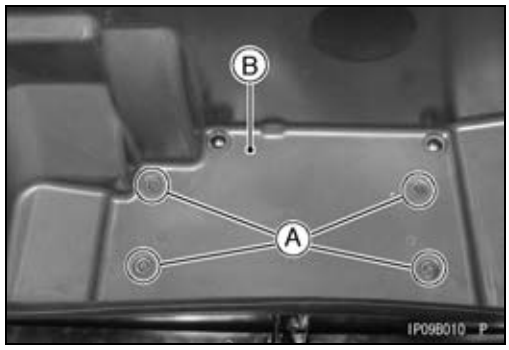

Front Cargo Compartment Installation

- Install:
  Screws (6 × 16 mm, 0.24 × 0.63 in.) [A]
  Collars (6 mm, 0.24 in.) [B]
  Screws (6 × 2 mm, 0.24 × 0.08 in.) [C]
  Washers [D]
  Well Nuts [E]
  Quick Rivets [F]
  Collars (4 mm, 0.16 in.) [G]

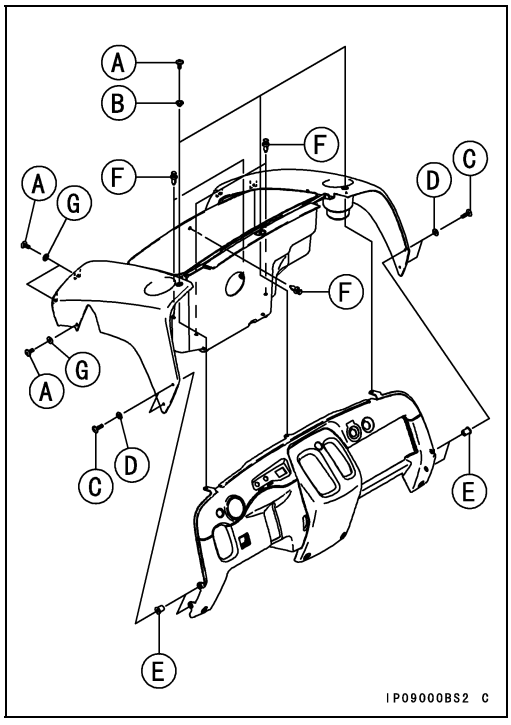

Cargo Bed

Cargo Bed Removal

- Remove:
  Hook [A] (unlock)

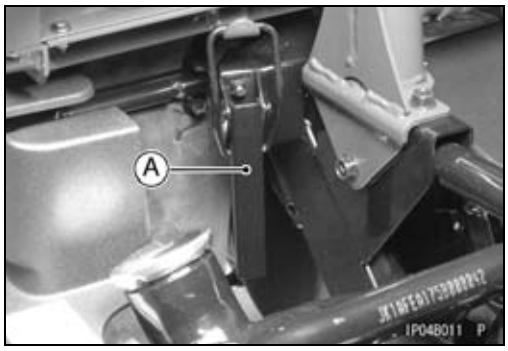

- Remove:
  Rear Fender Mounting Screws [A] and Collars

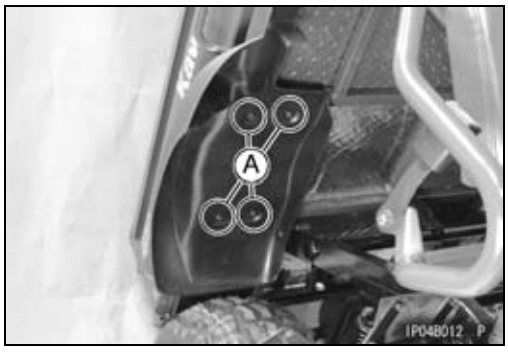

- Remove:
  Rear Fender Mounting Screw [A]
  Rear Fenders [B]

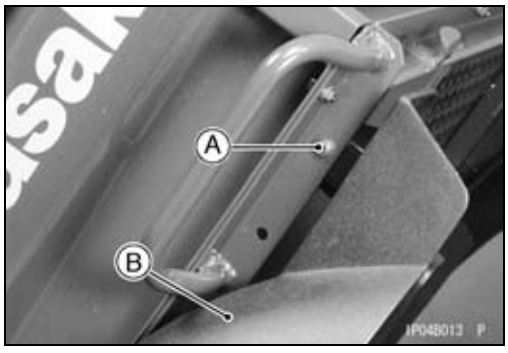

- Remove:
  Tail/Brake Light Lead Connectors [A]
  Tail/Brake Light Mounting Bolts [B]
  Tail/Brake Light Assembly [C]

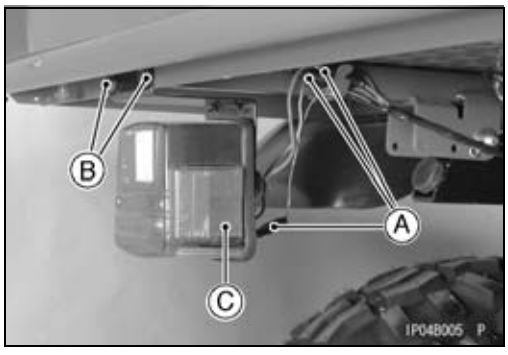

- Remove:
  Snap Pins [A]
  Cargo Bed Mounting Pins [B]
  Cargo Bed [C]

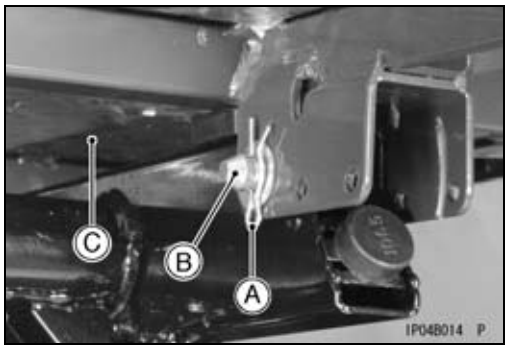

Cargo Bed

Cargo Bed Assembly

- Install:
  - Insulators [A]
  - Supporting Hook [B]
  - Bolt [C] and Nut [D]
  - Supporting Hook Holder [E]
  - Screw [F]

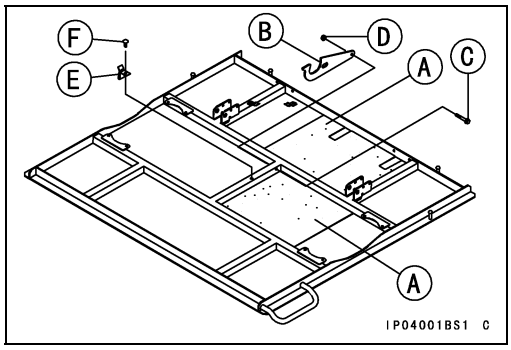

(KAF400-A1 ~ A9/B1 ~ B9/C1 ~ C9)

- Apply grease to the outside of the latch shaft [A].
- Apply grease to the inside of the pipe [B].
- Apply adhesive LOCKTITE 242 to the latch handle [C].
- Install:
  - Latch Shaft
  - Latch Handle
  - Spring [D]
  - Hook Wires [E]
  - Washers [F] and Screws [G]
  - Tail Gate Hook [H]
  - Bolts [I]

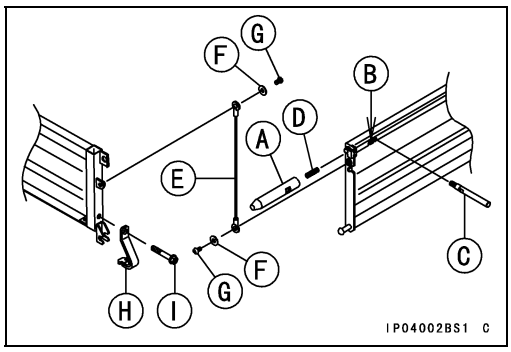

(KAF400AA ~/BA ~/CA)

- Apply adhesive LOCKTITE 242 to the damper [A].
- Install:
  - Damper [A]
  - Hook Assy [B]
  - Hook Assy bolts [C]
  - Hook Wires [D]
  - Screws [E]
  - Tail Gate Hook [F]
  - Bolts [G]

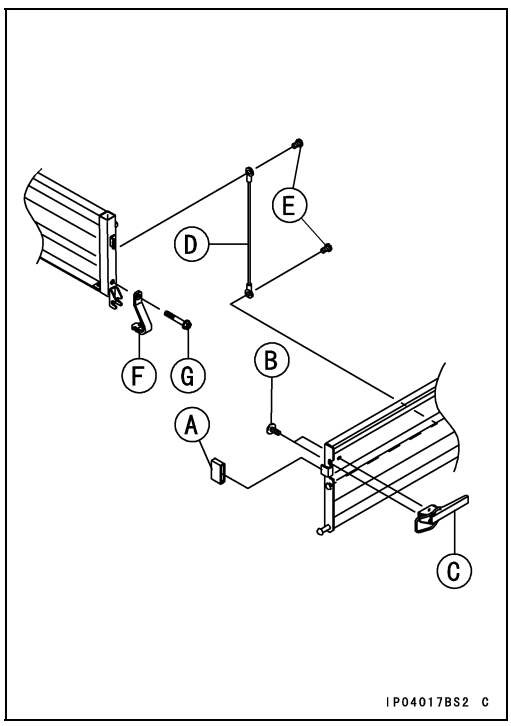

Cargo Bed Installation

- Apply adhesive agent:
  - Cargo Bed Rubber Dampers (Bottom)

Cargo Bed

- Install:
  Cargo Bed Rubber Dampers [A] and [B]

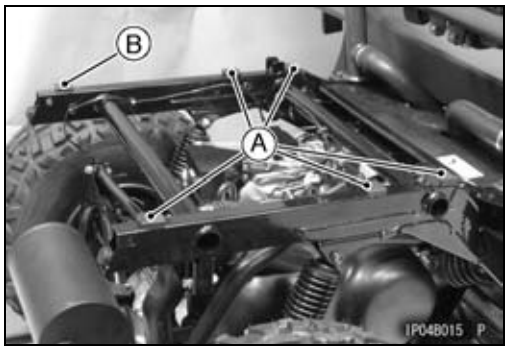

- Install the small damper [A] on the center of the cargo bed rubber dampers [B] as shown.
  [C] 2 mm (0.08 in.)

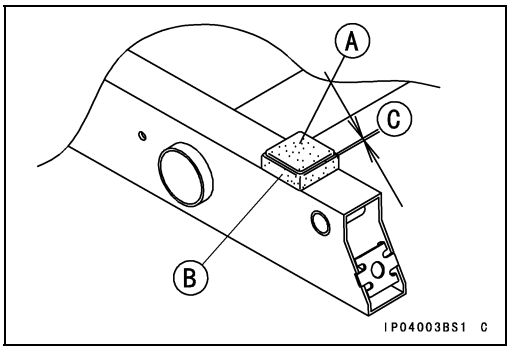

- Grease:
  Cargo Bed Mounting Pins
- Install:
  Cargo Bed
  Cargo Bed Mounting Pins
  Snap Pins

- Install:
  Rear Fender [A]
  Collars [B]
  Bolts [C]
  Clamp Nut [D]
  Screw [E]

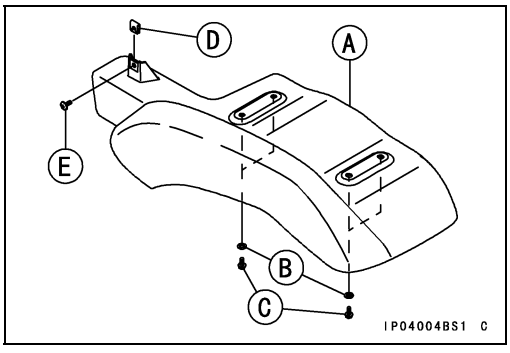

Cargo Bed Latch Position Inspection

- Cargo bed latche [A] must rest securely on the cargo bed hooks [B] without rattling.

★If there is rattling or not snug enough, adjust the latch positions.

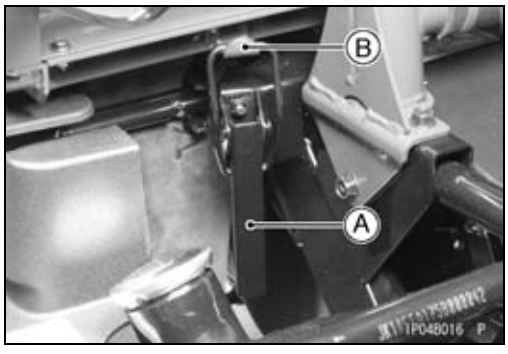

Cargo Bed

Cargo Bed Latch Position Adjustment

- Loosen the mounting bolts [A].
- Reposition the latch [B] to the suitable place by sliding within the ellipse bolt holes.
- Retighten the mounting bolts.

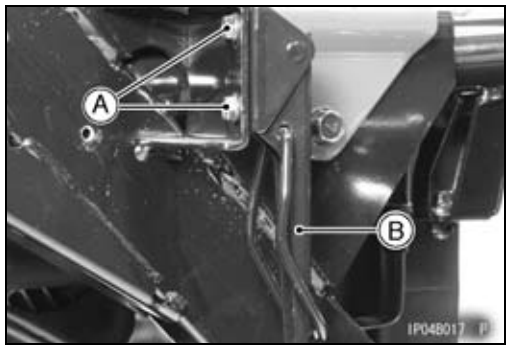

Front and Rear Bars

Front Bar Removal

- Remove:
  Front Bar Mounting Bolts (Lower) [A]
  Front Bar Mounting Bolts (Upper) [B], Washers and Nuts
  Front Bar [C]

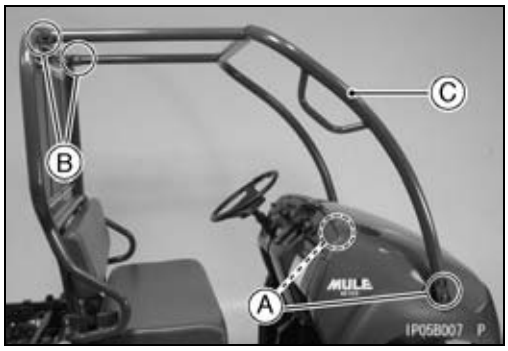

Front Bar Installation

- Replace the front bar mounting nuts with new ones.
- Tighten:

Torque - Front Bar Mounting Bolts (Lower) [A]: 98 N·m (10 kgf·m, 72 ft·lb)
Front Bar Mounting Bolts (Upper) [B]: 44 N·m (4.5 kgf·m, 32 ft·lb)

Washers [C]
Nuts [D]

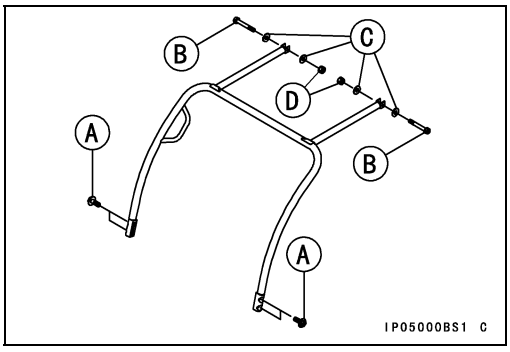

Rear Bar Removal

- Remove:
  Front Bar Mounting Bolts (Upper) [A], Washers and Nuts

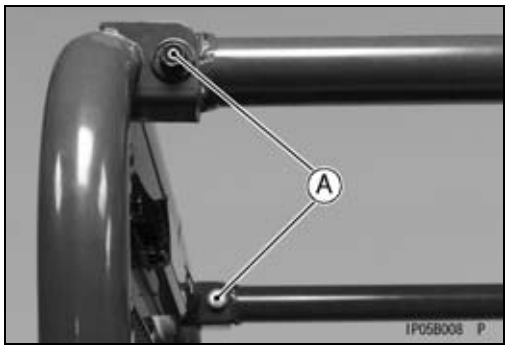

- Tilt up the cargo bed.
- Remove:
  Air Ducts [A]
  Rear Bar Mounting Bolts [B]
  Rear Bar [C]

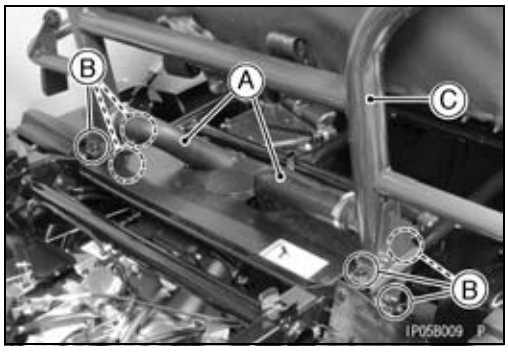

Rear Bar Installation

- Replace the front bar mounting nuts and the rear bar mounting nuts with new ones.
- Tighten:

Torque - Front Bar Mounting Bolts (Upper) [A]: 44 N·m (4.5 kgf·m, 32 ft·lb)
Rear Bar Mounting Bolts (L = 16 mm) [B]: 44 N·m (4.5 kgf·m, 32 ft·lb)
Rear Bar Mounting Bolts (L = 20 mm) [C]: 44 N·m (4.5 kgf·m, 32 ft·lb)

Washers [D]
Nuts [E]

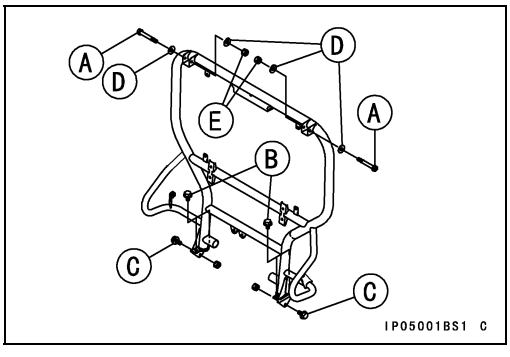

Front Fender

Front Fender Installation

- Install:
  - Front Fender [A]
  - Tapping Screw [B] (Hexagon Head)
  - Tapping Screw [C]
  - Collars [D]
  - Well Nut [E]
  - Headlight Cover [F]
  - Screws [G]
  - Washers [H]

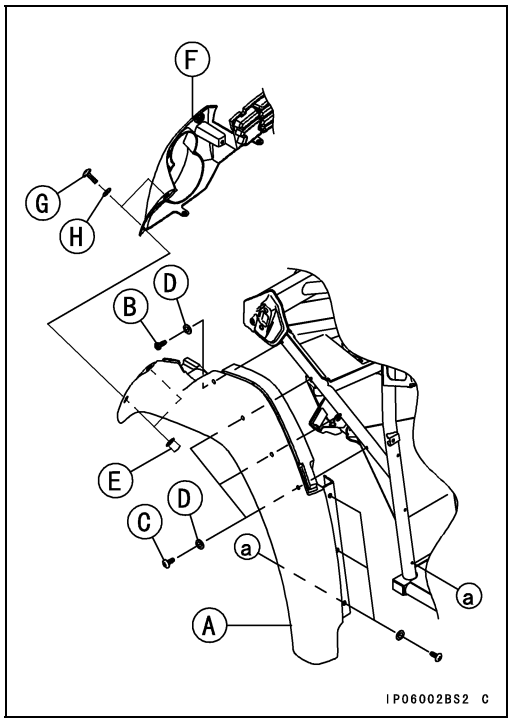

Guard and Cover

Front Guard Removal

- Remove:
  Screws [A] and Collars
  Front Cover [B]

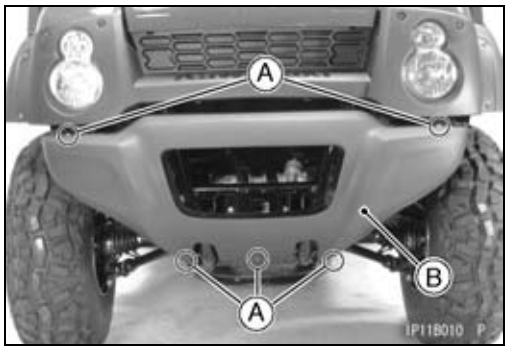

- Remove:
  Bolts [A]
  Clamp Brackets [B]
  Front Guard [C]

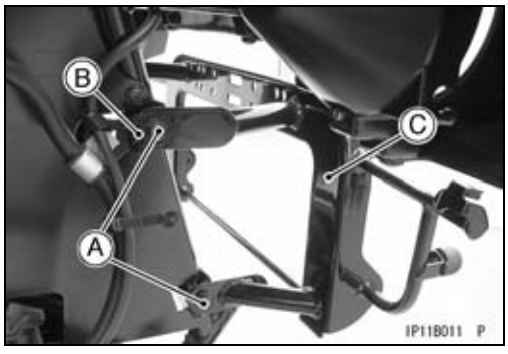

Front Guard Installation

- Install:
  Front Guard [A]
  Clamp Brackets [B]
  Bolts [C]
  Dampers [D] (see Exploded View)
  Front Cover [E]
  Screws [F] and Collars [G]

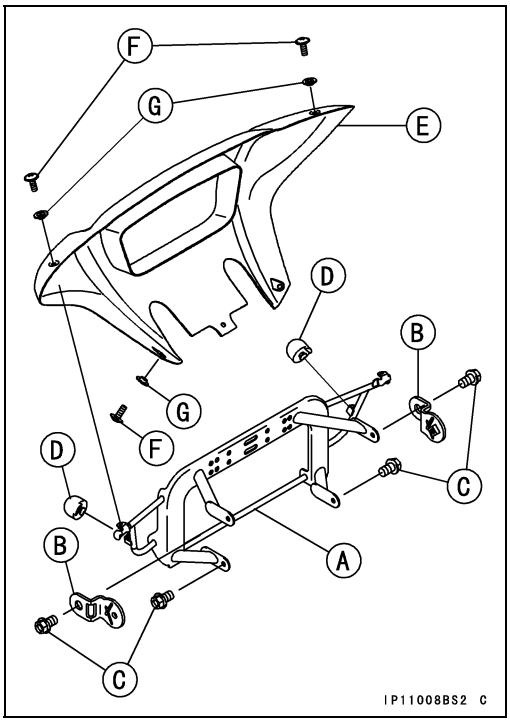

Floor Center Panel Removal

- Remove:
  Center Cover (see Center Cover Removal)
  Tapping Screws [A]
  Front Center Panel [B]

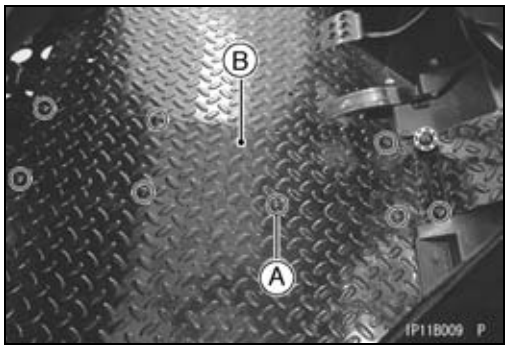

Guard and Cover

Floor Center Panel Installation

- Install:
  Front Center Panel [A]
  Tapping Screws [B]
  Throttle Pedal Bracket [C]
  Throttle Pedal Stop Bolt [D] (see Full Throttle Pedal Position Adjustment in the Fuel System chapter)
  Locknut [E]

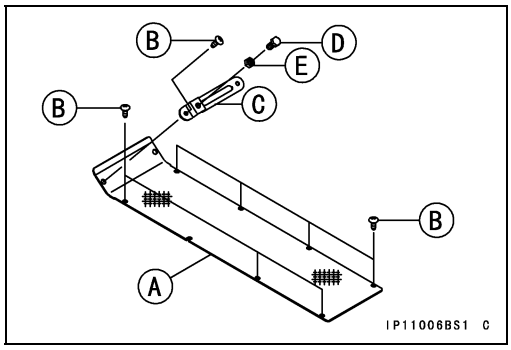

Front Final Gear Case Guard Removal

- Remove:
  Bolts [A]

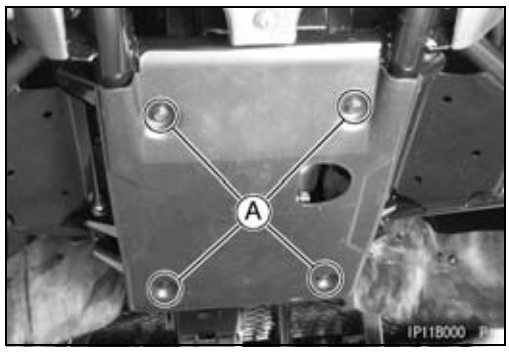

- Remove:
  Bolts [A]
  Front Final Gear Case Guard [B]

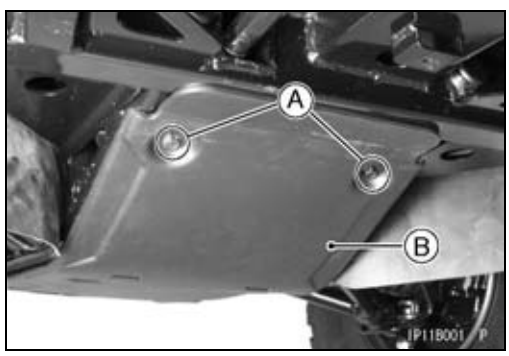

Front Final Gear Case Guard Installation

- Install:
  Front Final Gear Case Guard [A]
  Bolts [B]

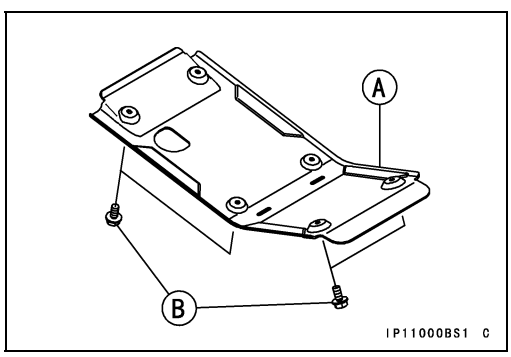

Bottom Guard Removal

- Remove:
  Bolts [A]
  Bottom Guard [B]

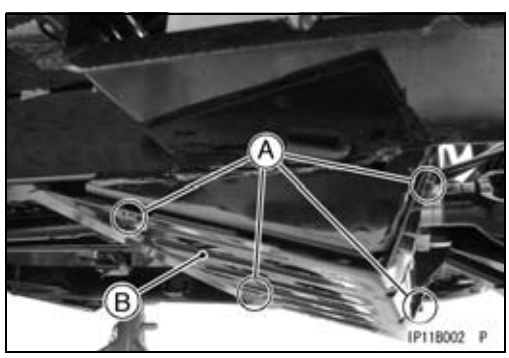

Guard and Cover

Bottom Guard Installation

- Install:
  Dampers [A]
  Bottom Guard [B]
  Bolts [C]

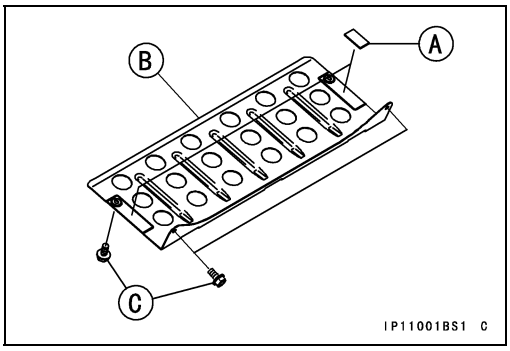

Transmission Case Guard Removal

- Remove:
  Bolts [A]
  Transmission Case Guard [B]

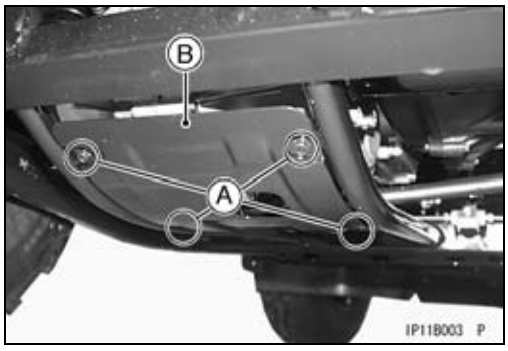

Transmission Case Guard Installation

- Install:
  Transmission Case Guard [A]
  Bolts [B]

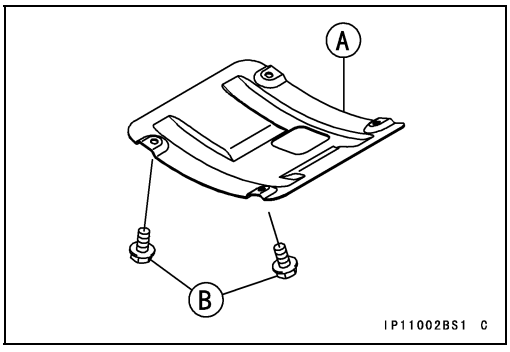

Center Cover Removal

- Remove:
  Quick Rivets [A]
  Center Cover [B]

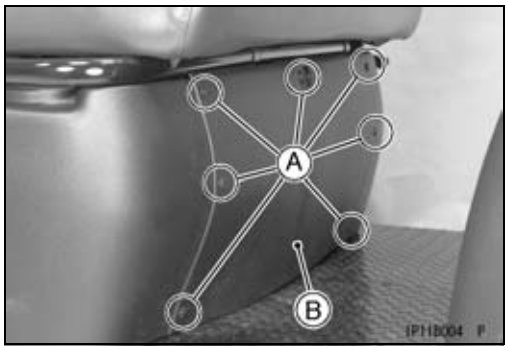

Center Cover Installation

- Install:
  Center Cover [A]
  Quick Rivets [B]

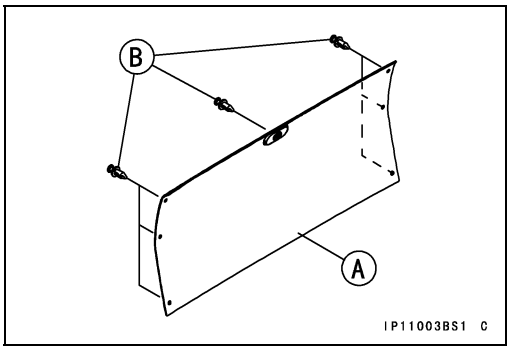

Guard and Cover

Side Covers Removal

- Remove:
  Quick Rivets [A]
  Screws [B] and Collars
  Bolts [C] and Collars
  Right Side Cover [D]

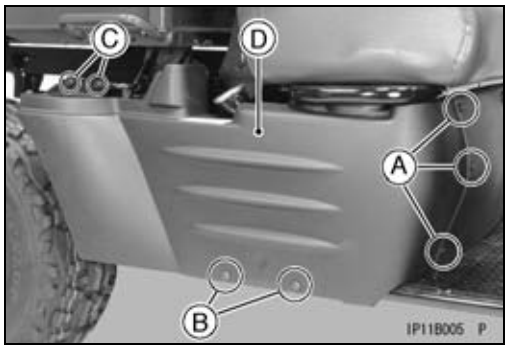

- Remove:
  Quick Rivets [A]
  Screws [B] and Collars
  Bolts [C] and Collars
  Left Side Cover [D]

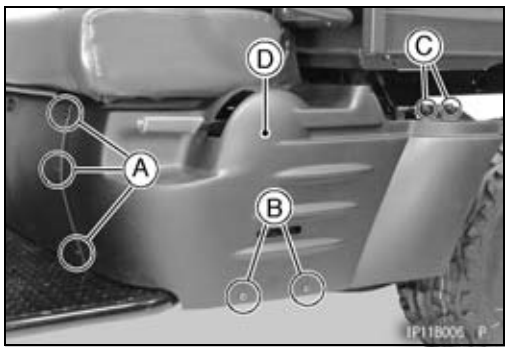

Side Covers Installation

- Install:
  Right Side Cover [A]
  Quick Rivets [B]
  Screws [C] and Collars [D]
  Bolts [E] and Collars [D]

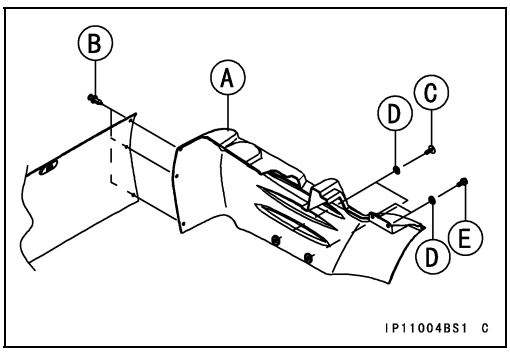

- Install:
  Left Side Cover [A]
  Quick Rivets [B]
  Screws [C] and Collars [D]
  Bolts [E] and Collars [D]

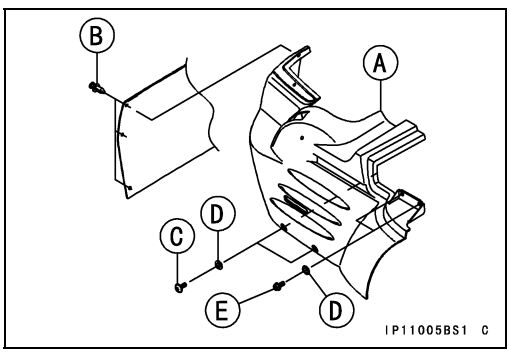

Cooling Fan Guard Removal (KAF400A9 ~ AA/B9~ BA/C9~ CA)

- Install:
  Band [A]
  Quick Rivets [B]
  Screws [C] and Collars [D]
  Flap [E]
  Screws [F]
  Cooling Fan Guard [G]

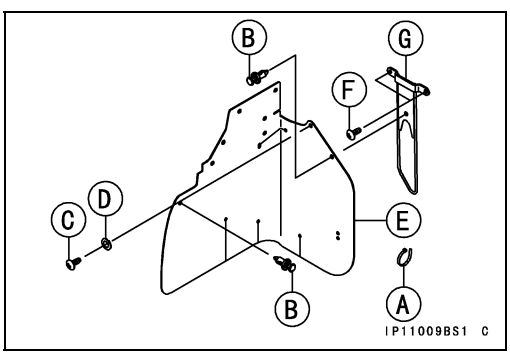

Guard and Cover

Cooling Fan Guard Removal (KAF400AB ~/BB ~)

- Remove:
  Band [A]
  Quick Rivets [B]
  Tapping Screws [C] and Collars [D]
  Flap [E]
  Tapping Screws [F]
  Cooling Fan Guard [G]

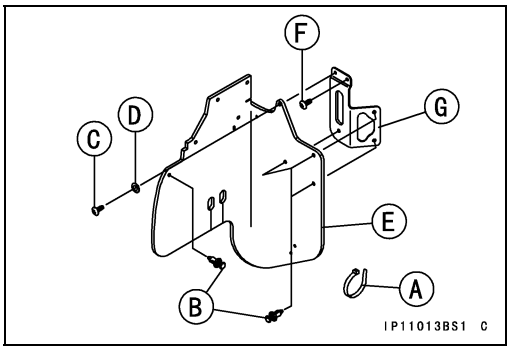

Cooling Fan Guard Installation (KAF400A9 ~ AA/B9 ~ BA/C9 ~ CA)

- Installation is the reverse of removal.
  Band [A]
  Cooling Fan Guard [B]

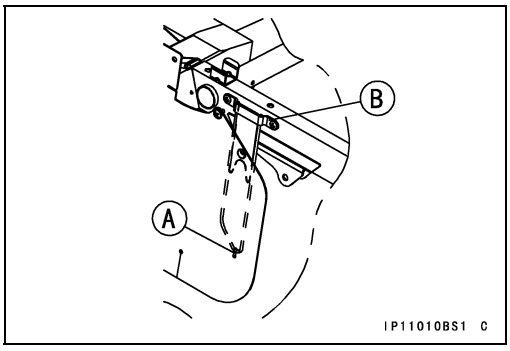

Cooling Fan Guard Installation (KAF400AB ~/BB ~)

- Installation is the reverse of removal.

Guard Plate Removal

- Remove:
  Air Ducts [A]
  Quick Rivets [B]

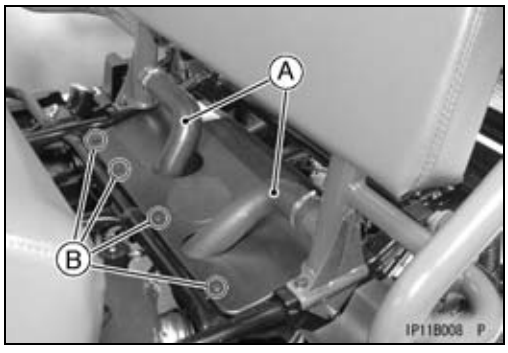

- Remove:
  Quick Rivets [A]
  Guard Plate [B]

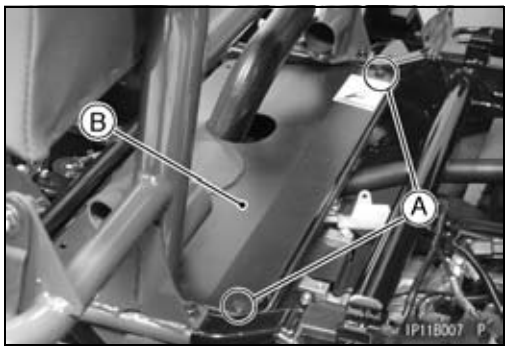

Guard and Cover

Guard Plate Installation

- Install:
  Guard Plate [A]
  Quick Rivets [B]
  Cap [C]
  Air Ducts
- Tighten the clamp screws.

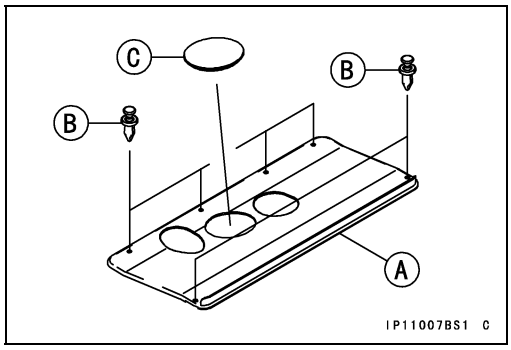

Electrical System

Table of Contents

Exploded View 16-2
Wiring Diagram (KAF400-A/C) 16-6
Wiring Diagram (KAF400-B) 16-8
Specifications 16-10
Special Tools 16-11
Parts Location 16-12
Precautions 16-14
Electrical Wiring 16-16
  Wiring Inspection 16-16
Battery 16-17
  Battery Removal 16-17
  Battery Installation 16-17
  Electrolyte Level Inspection 16-17
  Electrolyte Specific Gravity Inspection 16-17
  Charging Condition Inspection 16-17
  Initial Charging 16-18
  Ordinary Charging 16-19
  Battery Test Charging 16-21
Charging System 16-22
  Alternator Rotor and Stator Removal 16-22
  Alternator Rotor and Stator Installation 16-24
  Charging System Operational Inspection 16-25
  Stator Coil Resistance Inspection 16-26
  Regulator/Rectifier Inspection (KAF400-A1/B1/C1, A6 ~ A8/B6 ~ B8/C6 ~ C8) 16-26
  Regulator/Rectifier Inspection (KAF400A9 ~/B9 ~/C9 ~ CA) 16-28
Ignition System 16-31
  Spark Plug Removal 16-31
  Spark Plug Installation 16-31
  Spark Plug Cleaning/Inspection ... 16-31
  Spark Plug Gap Inspection 16-31
  Ignition Coil Removal 16-31
  Ignition Coil Installation 16-32
  Ignition Coil inspection 16-32
Electric Starter System 16-34
  Starter Motor Removal 16-34
  Starter Motor Installation 16-34
  Starter Solenoid Inspection 16-35
  Starter Motor Inspection 16-35
  Starter Motor Disassembly 16-36
  Starter Motor Assembly 16-38
  Starter Motor Brush Inspection 16-39
  Brush Spring Inspection 16-39
  Armature Inspection 16-39
  Yoke Assembly Inspection 16-41
  Pinion Clutch Inspection 16-41
  Starter Circuit Relay Inspection ... 16-41
Lighting System 16-44
  Headlight Beam Adjustment 16-44
  Headlight Bulb Replacement 16-44
  Tail/Brake Light Replacement 16-47
  Light Switch Bulb Replacement ... 16-48
  Indicator Light Bulb Replacement 16-48
Switches 16-50
  Brake Light Switch Inspection 16-50
  Oil Temperature Sensor Inspection (KAF400-A/C) 16-50
  Oil Temperature Warning Indicator Control Unit Inspection (KAF400-A/C) 16-50
  Switch Inspection 16-52
Fuses 16-53
  Fuse Removal 16-53
  Fuse Installation 16-53
  Fuse Inspection 16-53

Exploded View

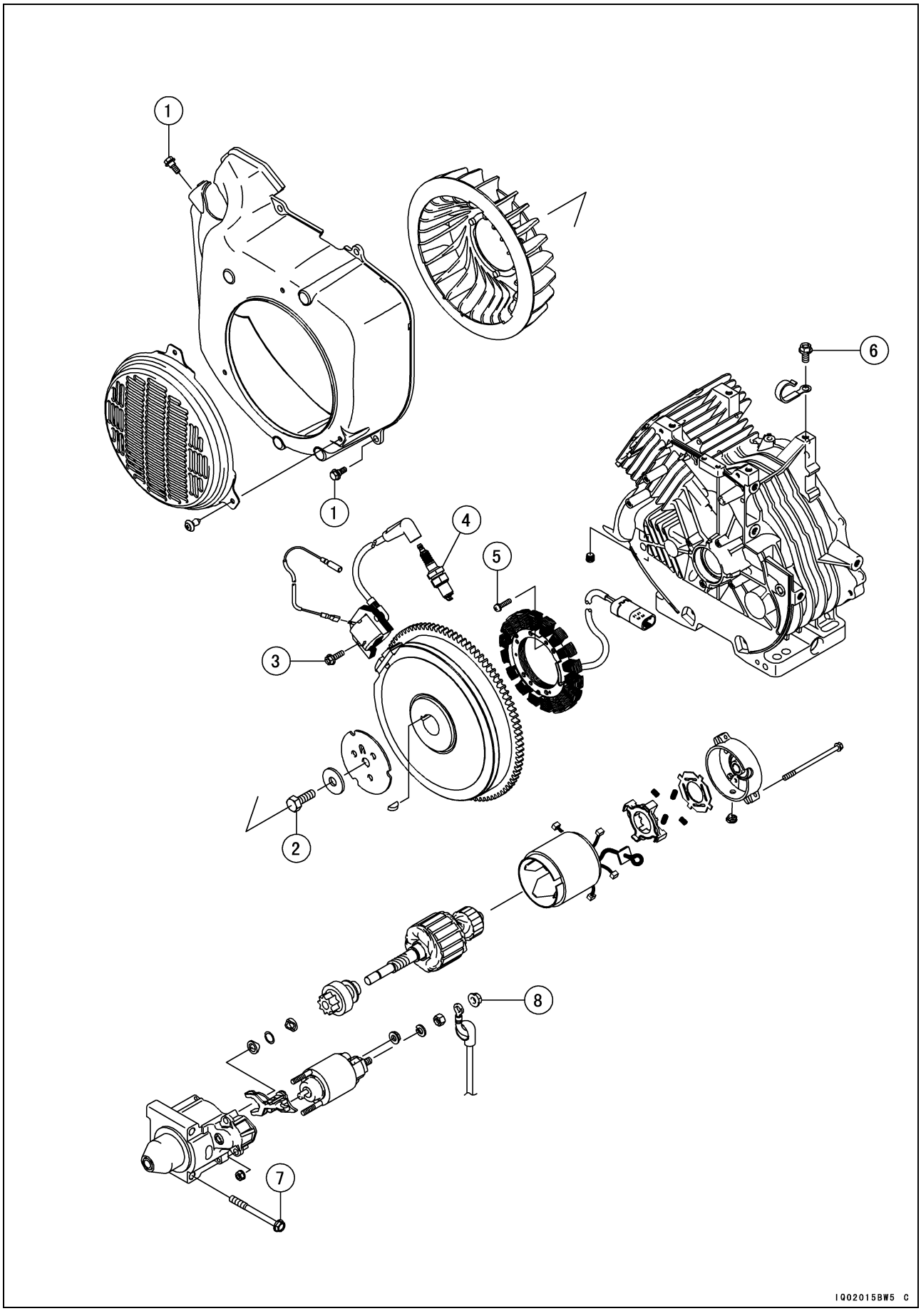

Exploded View

No.	Fastener	Torque			Remarks
		N·m	kgf·m	ft·lb	
1	Fan Housing Bolts	5.9	0.60	52 in·lb	
2	Alternator Rotor Bolt	56	5.7	41	
3	Ignition Coil Bolts	5.9	0.60	52 in·lb	
4	Spark Plug	22	2.2	16	
5	Stator Coil Screws	3.4	0.35	30 in·lb	
6	Wire Lead Clamp Bolt	6.9	0.70	61 in·lb	
7	Starter Motor Mounting Bolts	17	1.7	12	
8	Starter Motor Terminal Nut	8.8	0.90	78 in·lb	

Exploded View

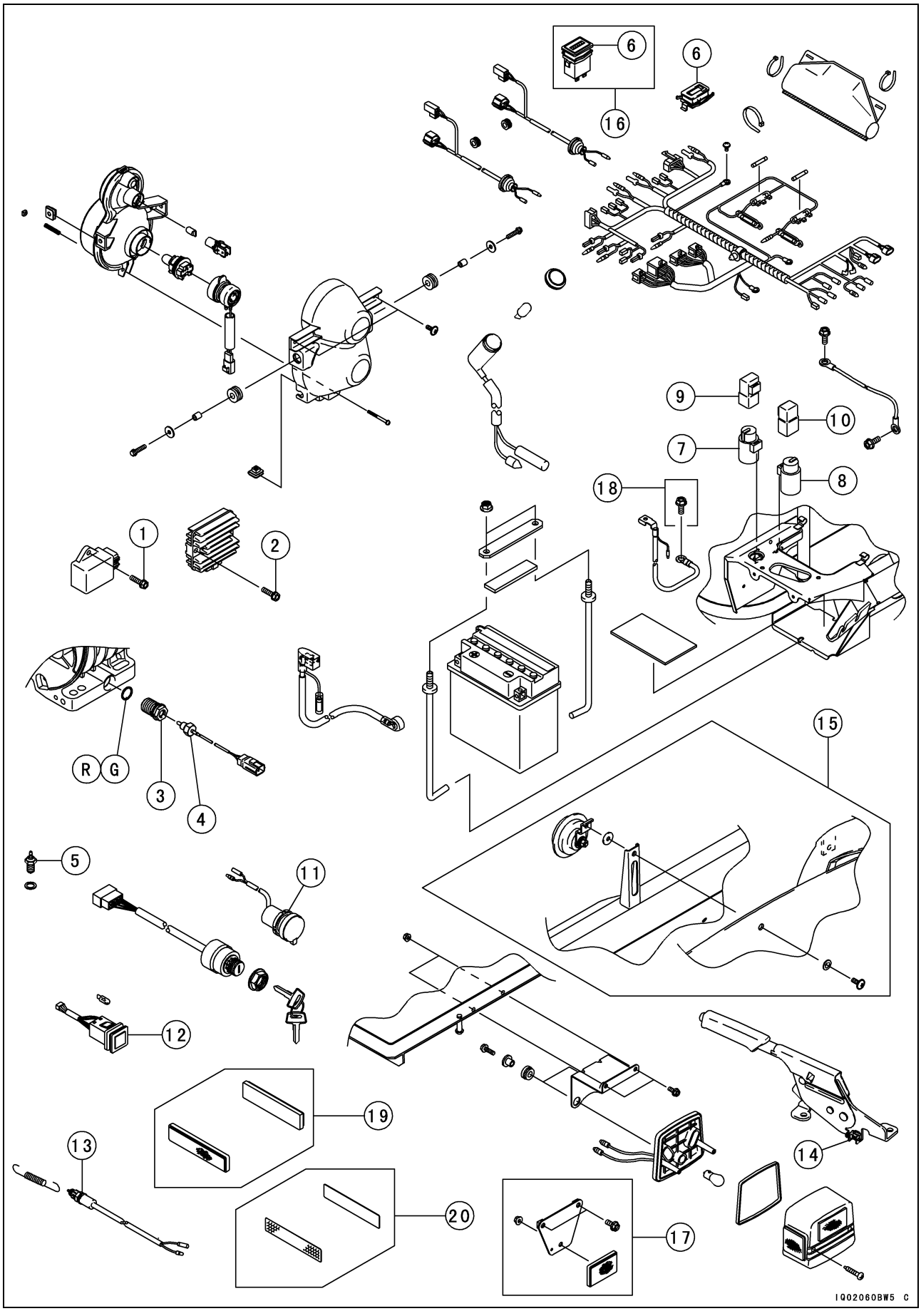

Exploded View

No.	Fastener	Torque			Remarks
		N·m	kgf·m	ft·lb	
1	Controller Mounting Bolt (KAF400-A/C)	5.4	0.55	48 in·lb	
2	Regulator/rectifier Bolts	7.8	0.80	69 in·lb	
3	Joint (KAF400-A/C)	7.4	0.75	65 in·lb	
4	Oil Temperature Sensor (KAF400-A/C)	5.4	0.55	48 in·lb	
5	Neutral Switch or Reverse Switch (EUR Model)	15	1.5	11	

6. Hour Meter
7. Starter Circuit Relay (Brake, KAF400-A1 ~ AA/B1 ~ BA/C1 ~ CA)
8. Starter Circuit Relay (Neutral, KAF400-A1 ~ AA/B1 ~ BA/C1 ~ CA)
9. Starter Circuit Relay (Brake, KAF400AB ~/BB ~)
10. Starter Circuit Relay (Neutral, KAF400AB ~/BB ~)
11. Accessory Connector (Power Outlet)
12. Light Switch
13. Brake Light Switch
14. Parking Brake Light Switch
15. Horn (EUR Model)
16. KAF400-A1 ~ A7/B1 ~ B7/C1 ~ C7
17. Other than AU Model
18. KAF400AB ~/BB ~
19. CA Model of the KAF400-A1 ~ AB/B1 ~ BB/C1 ~ CA
20. CA Model of the KAF400AC ~/BC ~

G: Apply grease.
R. Replacement Parts

Wiring Diagram (KAF400-A/C)

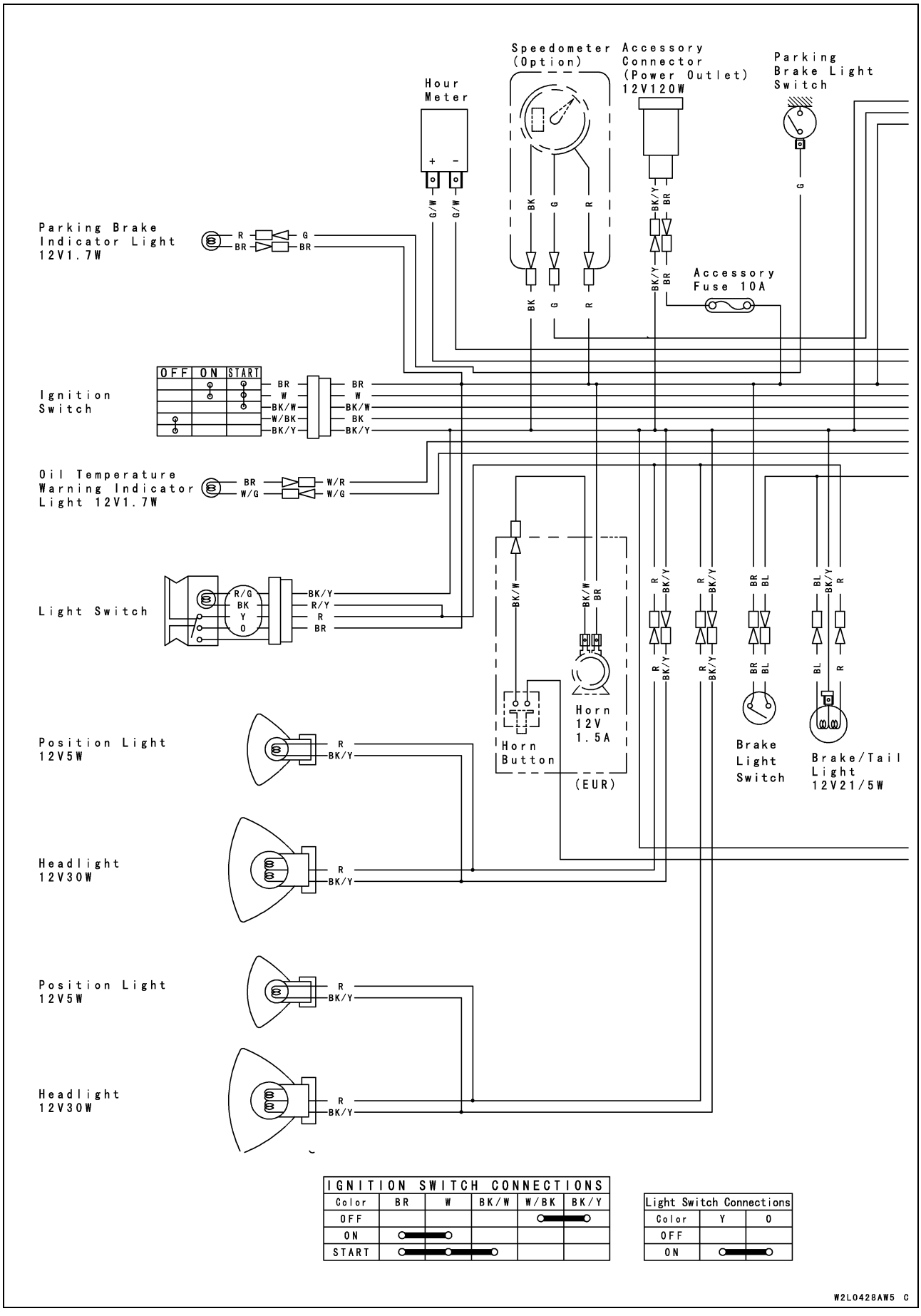

IGNITION SWITCH CONNECTIONS					
Color	BR	W	BK/W	W/BK	BK/Y
OFF				○	○
ON	○	○			
START	○	○	○		

Light Switch Connections		
Color	Y	O
OFF		
ON	○	○

Wiring Diagram (KAF400-A/C)

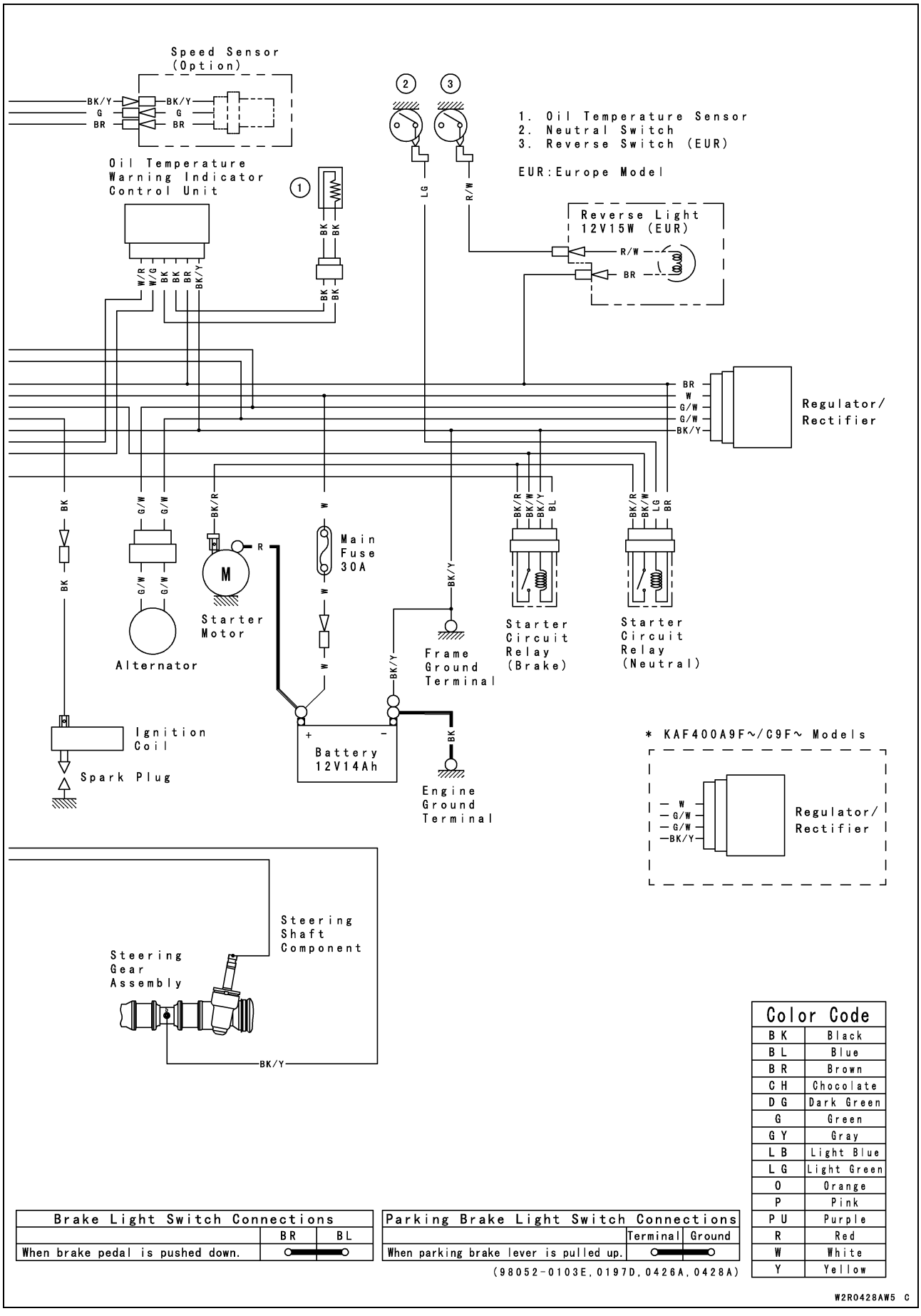

Color Code	
BK	Black
BL	Blue
BR	Brown
CH	Chocolate
DG	Dark Green
G	Green
GY	Gray
LB	Light Blue
LG	Light Green
O	Orange
P	Pink
PU	Purple
R	Red
W	White
Y	Yellow

Brake Light Switch Connections	BR	BL
When brake pedal is pushed down.	○	○

Parking Brake Light Switch Connections	Terminal	Ground
When parking brake lever is pulled up.	○	○

(98052-0103E, 0197D, 0426A, 0428A)

W2R0428AW5 C

Wiring Diagram (KAF400-B)

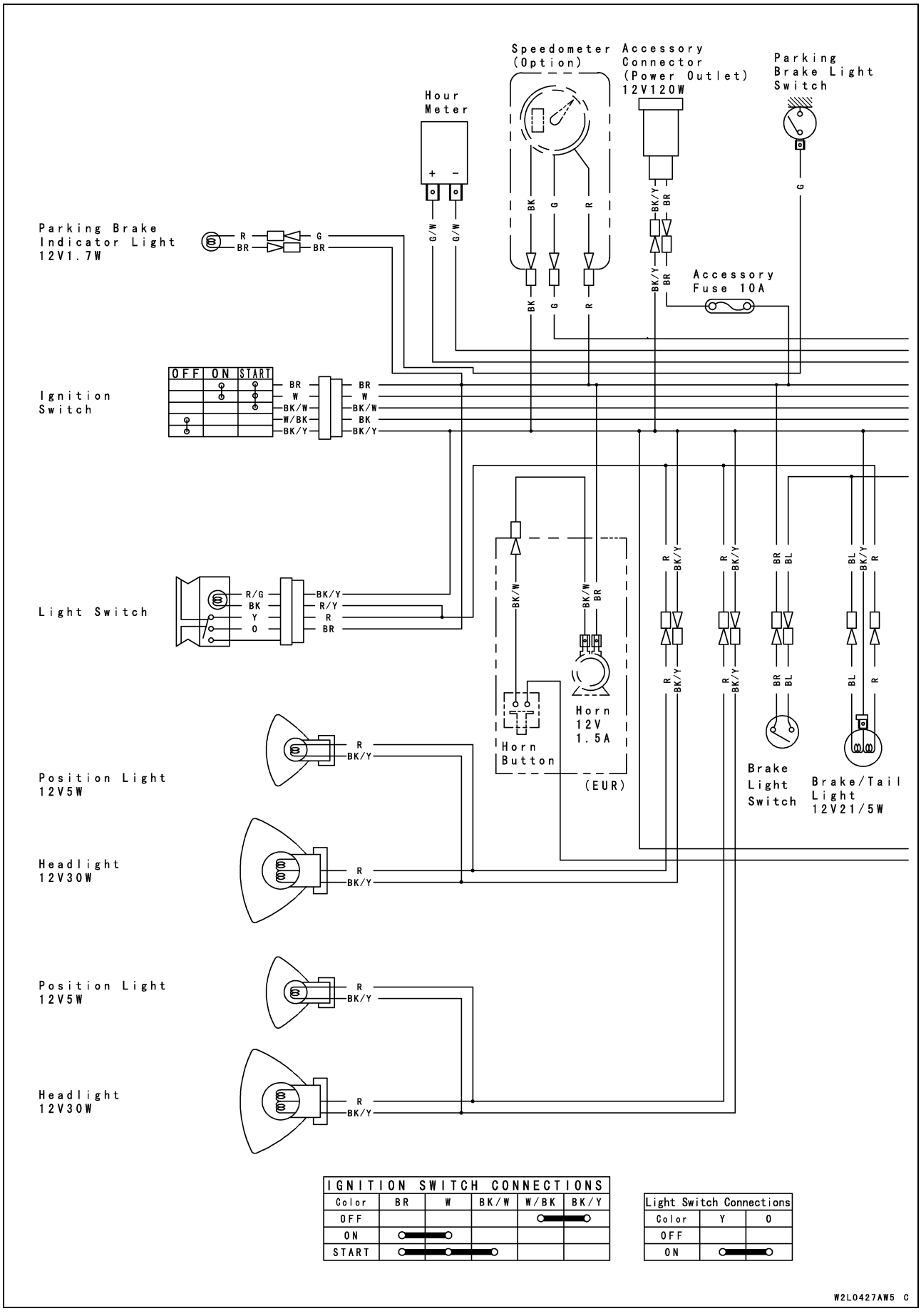

IGNITION SWITCH CONNECTIONS					
Color	BR	W	BK/W	W/BK	BK/Y
OFF				○—●	○—●
ON	○—●	○—●			
START	○—●	○—●	○—●		

Light Switch Connections		
Color	Y	O
OFF		
ON	○—●	○—●

Wiring Diagram (KAF400-B)

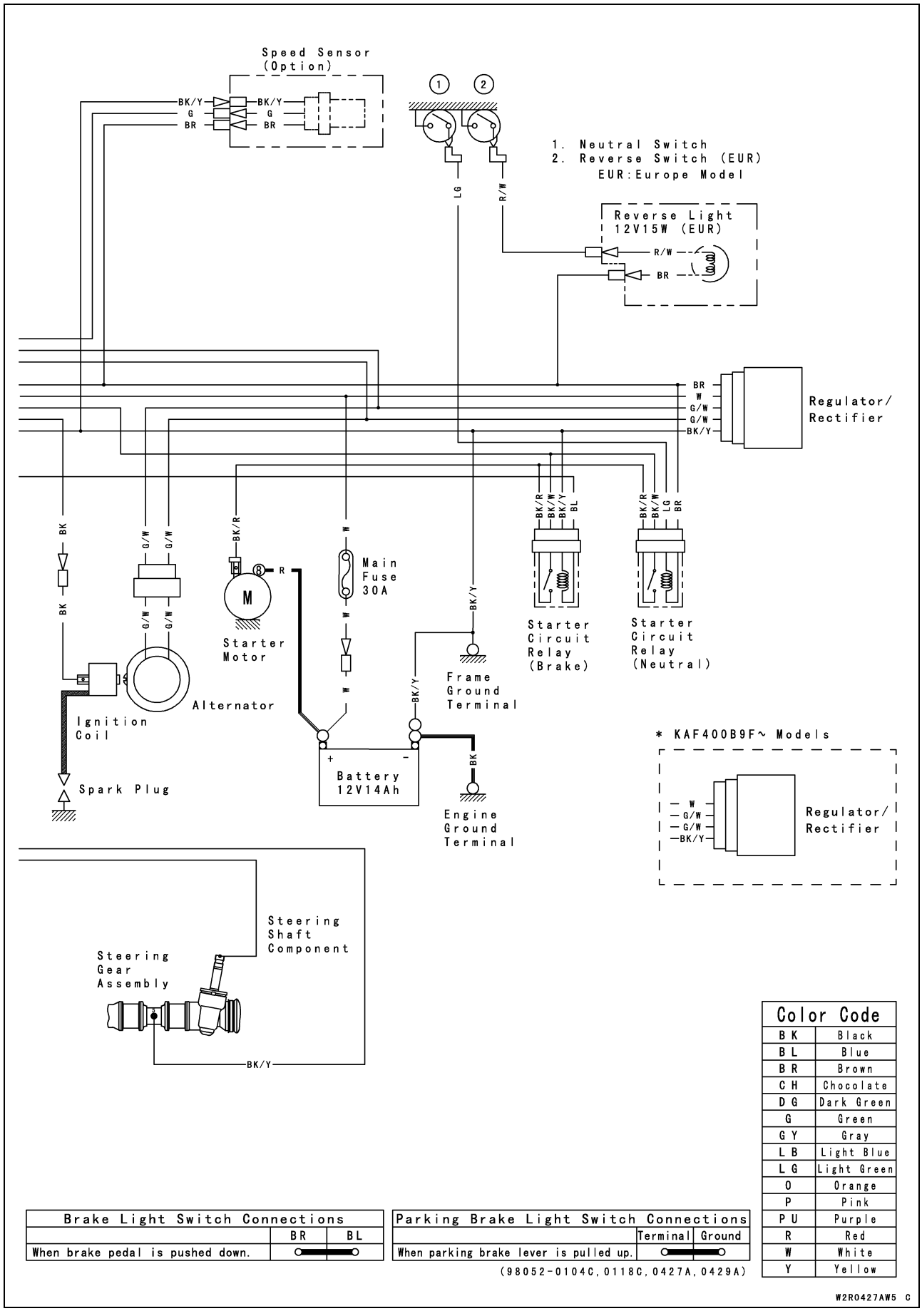

Specifications

Item	Standard	Service Limit
Battery		
Capacity	12 V 14 Ah (10 HR)	– – –
Electrolyte Level	Between upper and lower levels	– – –
Specific Gravity	1.270 @20° (68°F)	– – –
Gross Weight	4.5 kg (9.9 lb)	– – –
Electrolyte Volume	0.9 L (55 cu in)	– – –
Charging System		
Regulator/Rectifier Output Voltage	Battery Voltage ~ 15 V	– – –
Alternator Stator Coil Resistance	0.3 Ω or less	– – –
Ignition system		
Ignition Coil:		
Air Gap (between leg and magnet)	0.2 ~ 0.4 mm (0.0079 ~ 0.0157 in.)	– – –
Winding Resistance	in the text	– – –
Spark Plug:		
Standard Plug	NGK BPR5ES	– – –
Spark Plug Gap	0.7 ~ 0.8 mm (0.028 ~ 0.032 in.)	– – –
Electric Starter System		
Starter Motor:		
Carbon Brush Length	10 mm (0.394 in.)	6 mm (0.236 in.)
Connector Groove Depth	0.5 ~ 0.8 mm (0.020 ~ 0.031 in.)	0.2 mm (0.008 in.)
Commutator Outside Diameter	28 mm (1.102 in.)	27 mm (1.063 in.)
Commutator Runout	– – –	0.4 mm (0.016 in.)
Switches		
Brake Light Switch Timing	ON after 10 mm (0.39 in.) of pedal travel	– – –
Oil Temperature Sensor Resistance	in the text	– – –

Special Tools

Spark Plug Wrench, Hex 21:
57001-110

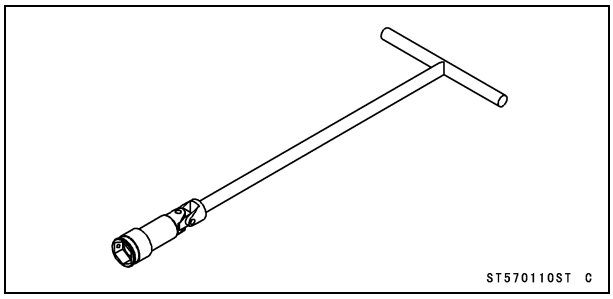

Hand Tester:
57001-1394

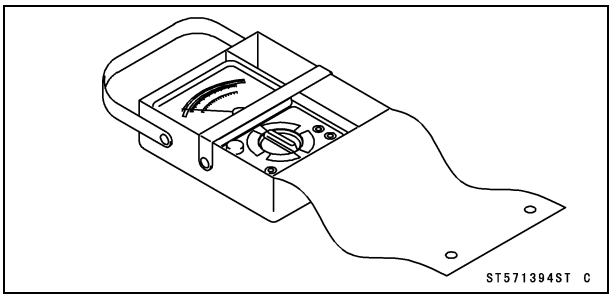

Parts Location

Oil Temperature Warning Indicator Light [A]
Parking Brake Indicator Light [B]
Hour Meter [C]
Ignition Switch [D]
Accessory Connector (Power Outlet) [E]
Light Switch [F]
Horn Button [G] (Europe Model)

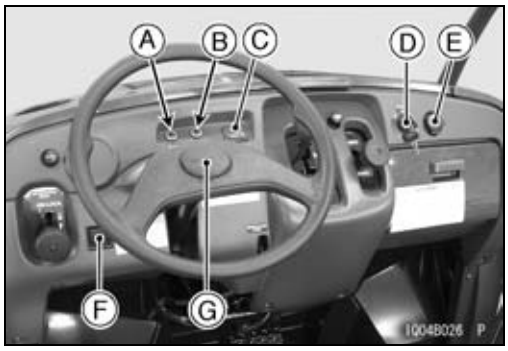

Brake Light Switch [A]

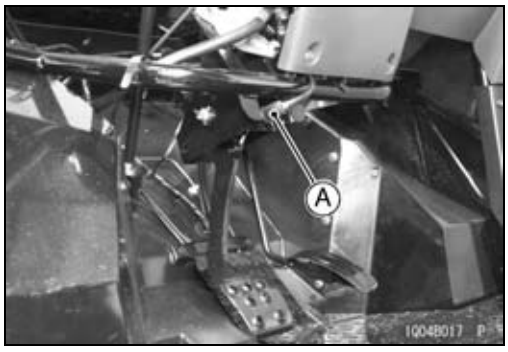

Starter Circuit Relay (Brake) [A]

Frame Ground Terminal [A]
Parking Brake Light Switch [B]
Regulator/Rectifier [C]
Controller Unit [D] (KAF400-A/C)
Starter Circuit Relay (Neutral) [E]
Battery [F]

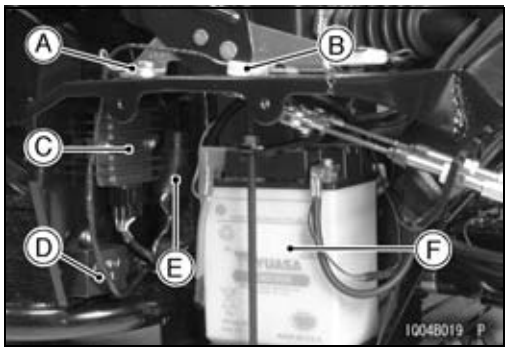

Spark Plug [A]

Parts Location

Ignition Coil [A]
Alternator [B]
Oil Temperature Sensor [C] (KAF400-A/C)
Neutral Position Switch [D]
Reverse Position Switch [E] (EUR Model)

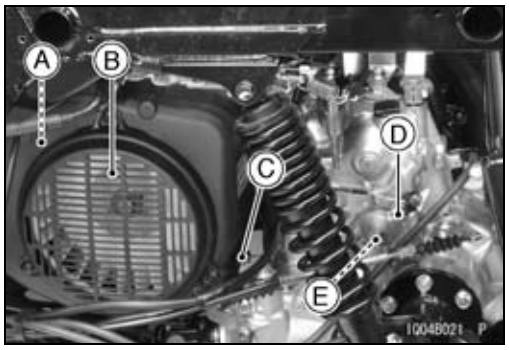

Engine Ground Terminal [A]

Accessory Fuse 10 A [A]
Main Fuse 30 A [B]
Battery [C]

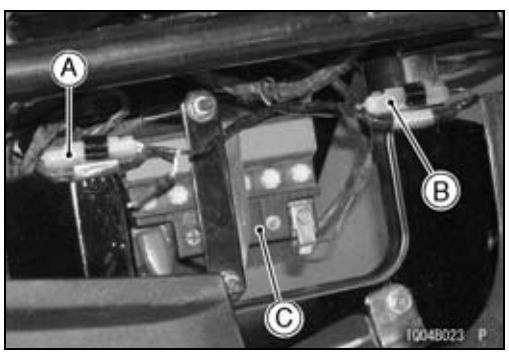

Starter Motor [A]
Speed Sensor [B] (Option)

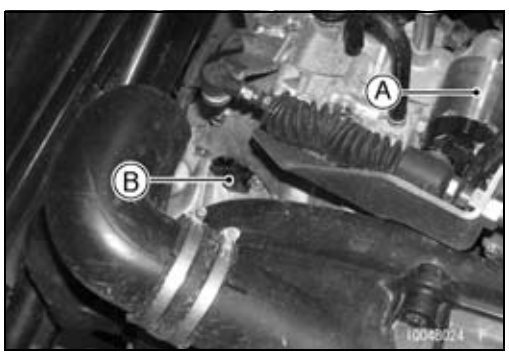

Speed Meter [A] (Option)

Precautions

There are a number of important precautions that are musts when servicing electrical systems. Learn and observe all the rules below.

○Do not reverse the battery cable connections. This will burn out the diodes in the electrical parts.

○Always check battery condition before condemning other parts of an electrical system. A fully charged battery is a must for conducting accurate electrical system tests.

○The electrical parts should never be struck sharply, as with a hammer, or allowed to fall on a hard surface. Such a shock to the parts can damage them.

○To prevent damage to electrical parts, do not disconnect the battery cables or any other electrical connections when the main switch is on, or while the engine is running.

○Because of the large amount of current, never keep the main switch turned to the start position when the starter motor will not turn over, or the current may burn out the starter motor windings.

○Take care not to short the cables that are directly connected to the battery positive (+) terminal to the chassis ground.

○Troubles may involve one or in some cases all items. Never replace a defective part without determining what CAUSED the failure. If the failure was brought on by some other item or items, they too must be repaired or replaced, or the replacement part will soon fail again.

○Make sure all connectors in the circuit are clean and tight, and examine leads for signs of burning, fraying, etc. Poor leads and bad connections will affect electrical system operation.

○Measure coil and winding resistance when the part is cold (at room temperature).

○Color Codes:

BK: Black	G: Green	P: Pink
BL: Blue	GY: Gray	PU: Purple
BR: Brown	LB: Light Blue	R: Red
CH: Chocolate	LG: Light Green	W: White
DG: Dark Green	O: Orange	Y: Yellow

○Electrical Connectors:
Connectors [A]

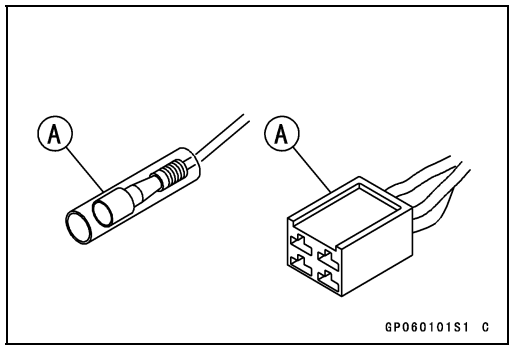

Precautions

Connectors [B]

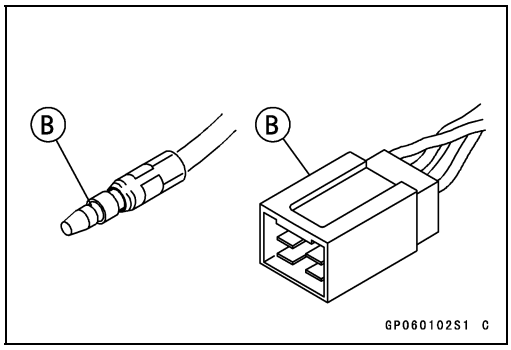

Electrical Wiring

Wiring Inspection

- Visually inspect the wiring for signs of burning, fraying, etc.

★If any wiring is poor, replace the damaged wiring.

- Pull each connector [A] apart and inspect it for corrosion, dirt, and damage.

★If the connector is corroded or dirty, clean it carefully. If it is damaged, replace it.

- Check the wiring for continuity.

○Use the wiring diagram to find the ends of the lead which is suspected of being a problem.

○Measure the resistance between the ends of the leads.

★If the resistance is not 0 Ω, the lead is defective. Replace the lead or the wiring harness if necessary.

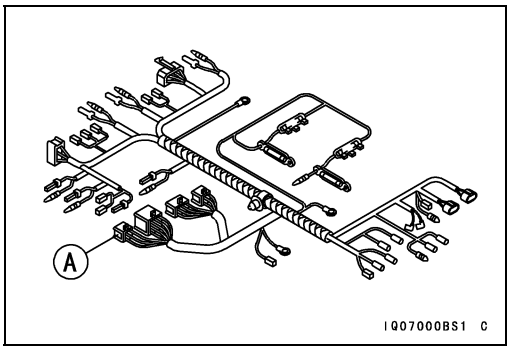

Battery

Battery Removal

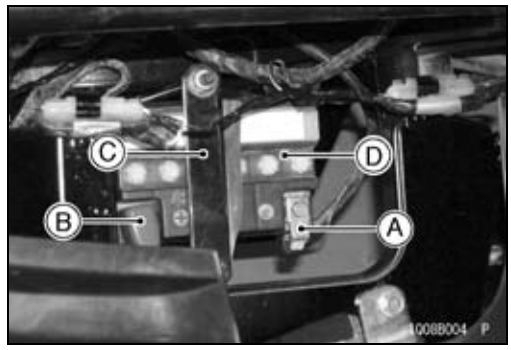

- Raise the seat.
- Disconnect the battery negative (−) cable [A] first, and then the positive cable [B].
- Remove:
  Battery Holder [C]
- Take out the battery [D].

Battery Installation

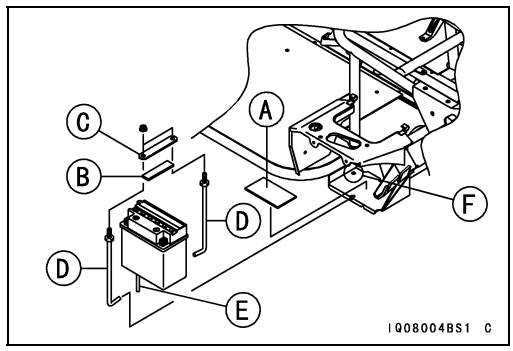

- Check that the rubber damper [A] is properly in place.
- Check that the rubber damper [B] under the battery holder [C] is properly in place.
- Put the battery on the damper so that the positive terminal faces forward.
- Install:
  Battery Holder
  Battery Holder Rods [D]
- Route the battery bent hose [E] through the hole [F] in the floor board.

- Connect the positive (+) cable first, and then connect the negative (–) cable.
- Put a light coat of grease on the terminals to prevent corrosion.
- Install:
  Positive Terminal Cover (Red)

Electrolyte Level Inspection

- Refer to the Electrical System in the Periodic Maintenance chapter.

Electrolyte Specific Gravity Inspection

- Refer to the Electrical System in the Periodic Maintenance chapter.

Charging Condition Inspection

- Refer to the Electrical System in the Periodic Maintenance chapter.

Battery

Initial Charging

⚠ DANGER

Batteries produce an explosive gas mixture of hydrogen and oxygen that can cause serious injury and burns if ignited. Keep the battery away from sparks and open flames during charging. When using a battery charger, connect the battery to the charger before turning on the charger. This procedure prevents sparks at the battery terminals which could ignite any battery gases.

NOTICE

If the battery is not given a full initial charging, it will discharge in a few weeks. After that it can not be charged by supplemental charging.
Always remove the battery from the vehicle for charging. If the battery is charged while still installed, battery electrolyte may spill and corrode the frame or other parts of the vehicle.
Do not use a high rate battery charger, as is typically employed at automotive service stations, unless the charger rate can be reduced to the level required.
Charging the battery at a rate higher than specified may ruin the battery. Charging at a high rate causes excess heat which can warp the plates and cause internal shorting. Higher-than-normal charging rates also cause the plates to shed active material. Deposits will accumulate, and can cause internal shorting
If the temperature of the electrolyte rises above 45°C (113°F) during charging, reduce the charging rate to lower the temperature, and increase charging time proportionately.

- Remove:
  Battery
  Filler Caps

⚠ WARNING

Electrolyte contains sulfuric acid which is harmful to skin, eyes, and clothing.
Wear eye protection and rubber gloves.
If spillage occurs on body or clothing, rinse at once with water for at least 15 minutes.

Battery

- Fill each cell to the upper level line on the battery case with fresh electrolyte (specific gravity: 1.270) at a temperature of 30°C (86°F) or less. Let the battery stand for about 30 minutes before charging.

NOTE

○*If the electrolyte level drops, add electrolyte to the upper level line before charging.*

- Set the charging rate at 1/10 the battery capacity, and **charge it for 10 hours**. For example, if the battery is rated at 14 Ah, the charging rate would be 1.4 Ah.
- Turn the charger off, then disconnect it from the battery.
- Check:
  Electrolyte Level (see Electrolyte Level Inspection)
- Tighten the filler caps.

Ordinary Charging

⚠ DANGER

Batteries produce an explosive gas mixture of hydrogen and oxygen that can cause serious injury and burns if ignited. Keep the battery away from sparks and open flames during charging. When using a battery charger, connect the battery to the charger before turning on the charger. This procedure prevents sparks at the battery terminals which could ignite any battery gases.

NOTICE

Always remove the battery from the vehicle for charging. If the battery is charged while still installed, battery electrolyte may spill and corrode the frame or other parts of the vehicle.
Do not use a high rate battery charger, as is typically employed at automotive service stations, unless the charger rate can be reduced to the level required.
Charging the battery at a rate higher than specified may ruin the battery. Charging at a high rate causes excess heat which can warp the plates and cause internal shorting.
Higher-than-normal charging rates also cause the plates to shed active material. Deposits will accumulate, and can cause internal shorting.
If the temperature of the electrolyte rises above 45°C (113°F) during charging, reduce the charging rate to lower the temperature, and increase charging time proportionately.

- Remove:
  Battery (see Battery Removal)

Battery

- Connect a charger to the battery BEFORE plugging it in or turning it on.
- Set the charging rate and time according to the battery condition previously determined, using the Battery Charging Rate/Time Table.
- Check the electrolyte level after charging.
- Turn the charger off or unplug it, then disconnect it from the battery.
- Check battery condition.

★If the battery condition indicates that it is not fully charged, additional charging time is necessary.

Battery Charging Rate/Time Table

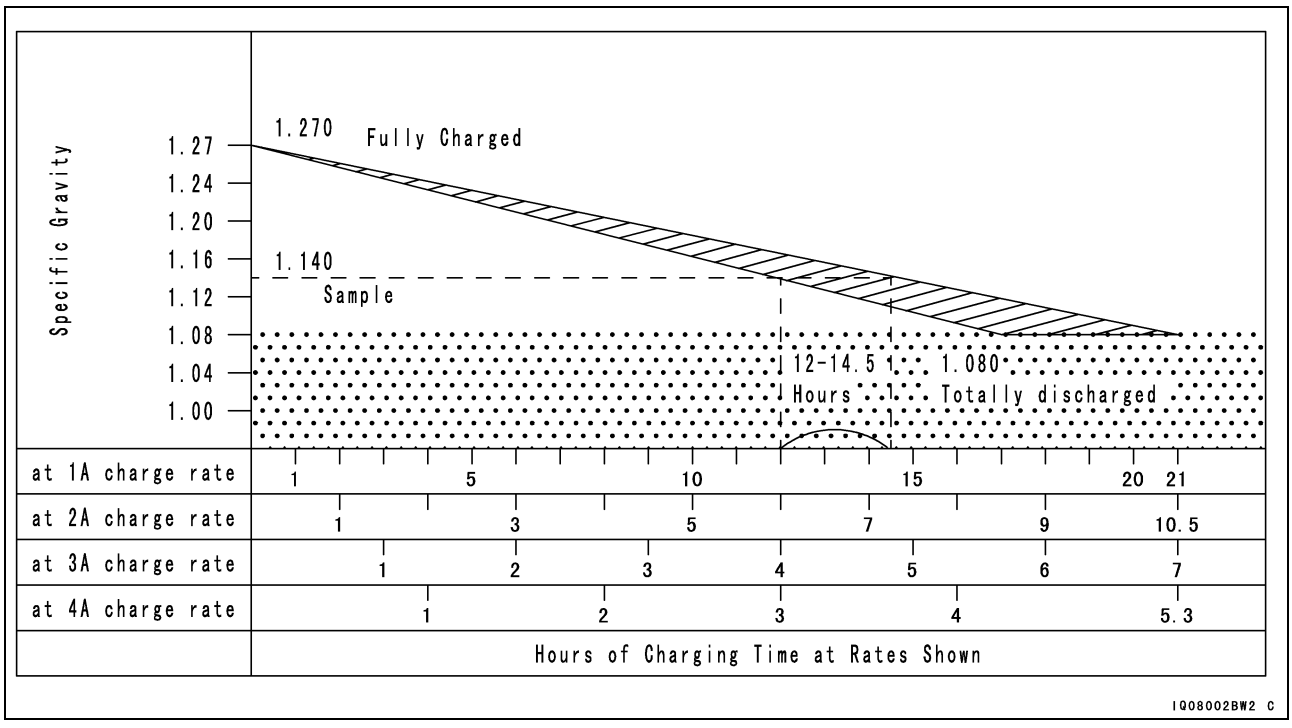

Battery Troubleshooting Guide

	Good Battery	Suspect Battery	Action
Plates	(+) Chocolate color (−) gray	white (sulphated); + plates broken or corroded	Replace
Sediment	none, or small amount	sediment up to plates, causing short	Replace
Voltage	above 12.6 V	below 12.6 V	Test charge
Electrolyte Level	between upper and lower level lines	below lower level line	Fill and test charge
Specific Gravity	above 1.240 in all cells; no two cells more than 0.020 different	below 1.100, or difference of more than 0.020 between two cells	Test charge

Battery

Battery Test Charging

★If the battery is suspected of being defective, sulfated, or unable to take a charge, consult the table.

● To test charge a battery, perform the ordinary charging procedure and monitor the battery voltage and other signs as mentioned below.

★If the battery voltage suddenly jumps to over 13 V just after the start of charging, the plates are probably sulfated. A good battery will rise to 12 V immediately and then gradually go up to 12.5 or 13 V in about 30 min. to an hour after the start of charging.

★If one cell produces no gas bubbles or has a very low specific gravity, it is probably shorted.

★If there does not appear to be enough sediment in a cell to short the plates, but that cell has a very low specific gravity after the battery is fully charged, the trouble may be that there is not enough acid in that one cell. In this case only, sulfuric acid solution may be added to correct the specific gravity.

★If a fully charged battery not in loses its charge after 2 to 7 days; or if the specific gravity drops markedly, the battery is defective. The self-discharge rate of a good battery is only about 1% per day.

Sulfation here [A]
Sediment here [B]

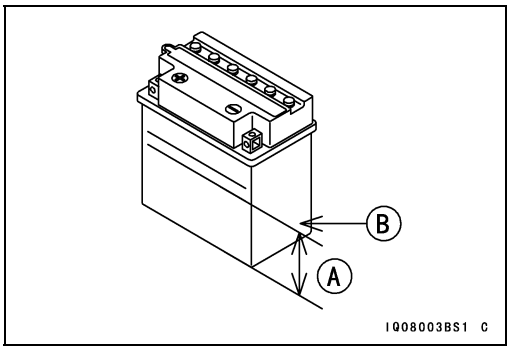

Alternator Rotor and Stator Removal

- Tilt up the cargo bed.
- Remove:
  Left Rear Wheel (see Wheels/Tires chapter)
  Carburetor (see Fuel System chapter)
  2WD/4WD Shift Cable Holder (KAF400-A/C)
  Starter Motor (for Stator Coil Removal)

- Remove:
  Fan Housing Bolts [A]

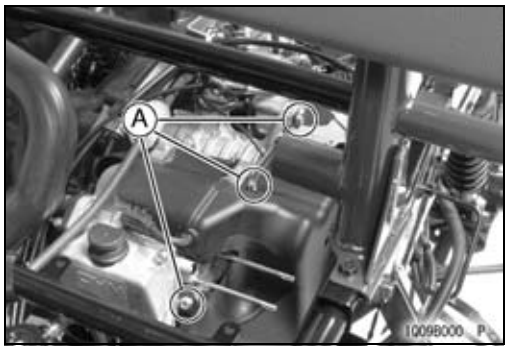

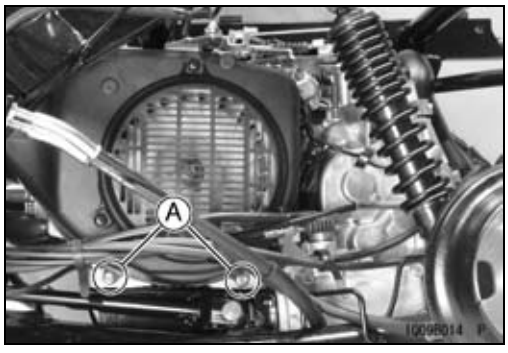

- Remove the stoppers [A] of the fan housing.

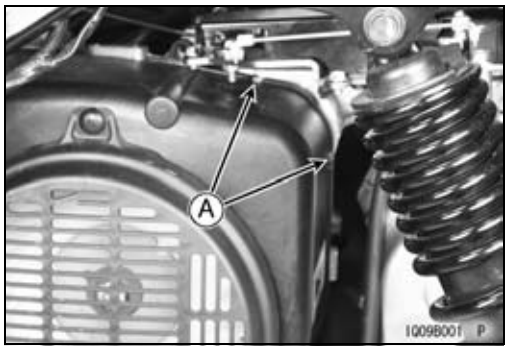

- Remove the fan housing [A] as shown.

Charging System

- Remove:
  Ignition Coil Lead Connector [A] (disconnect)
  Ignition Coil Bolts [B]
  Ignition Coil [C]

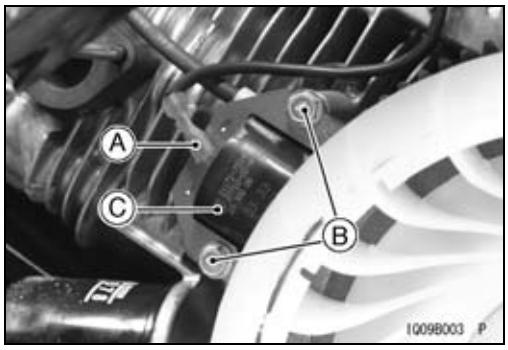

- Hold the alternator rotor with a suitable holder [A].
- Remove:
  Alternator Rotor Bolt [B]
  Washer [C] and Plate [D]
  Cooling Fan [E]

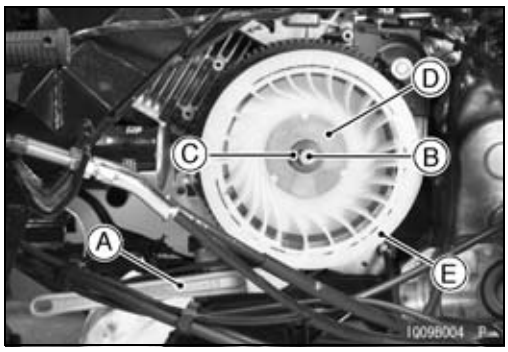

- Screw the alternator rotor bolt [A].
- Tap the bolt end sharply and squarely to break the rotor loose, and remove the alternator rotor [B].

NOTICE
Do not attempt to strike the alternator rotor itself. Striking the rotor can cause the magnets to lose their magnetism.

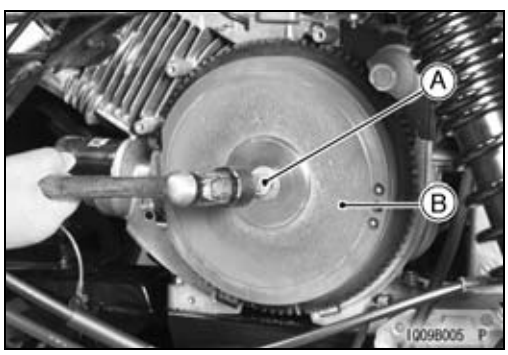

- Disconnect:
  Alternator Lead Connector [A]

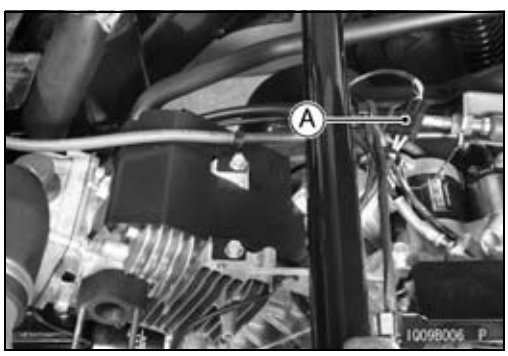

- Remove:
  Starter Motor (see Starter Motor Removal)
  Woodruff Key [A]
  Stator Coil Screws [B]
  Stator Coil [C]

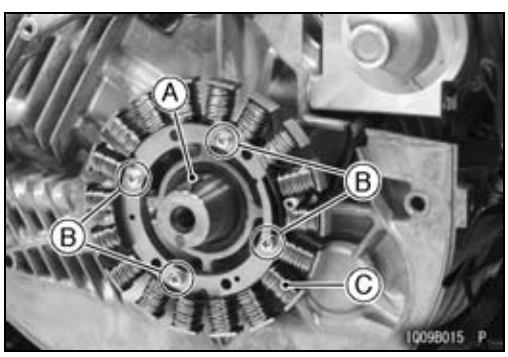

Alternator Rotor and Stator Installation

- Route the stator coil lead according to the Appendix chapter.
- Install:
  Stator Coil
  Stator Coil Screws
- Tighten:

Torque - Stator Coil Screws: 3.4 N·m (0.35 kgf·m, 30 in·lb)

- Clean [A] the inside of the alternator rotor and the end of the crankshaft, or the taper will not fit snugly.
- Fit the rotor onto the crankshaft so that the woodruff key [B] fits in the groove [C] in the hub of the rotor.

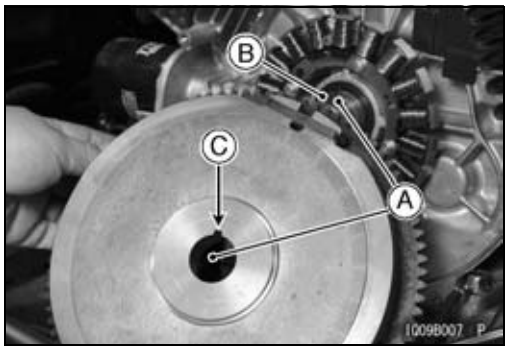

- Insert the projections [A] of the cooling fan in the rotor recesses [B].

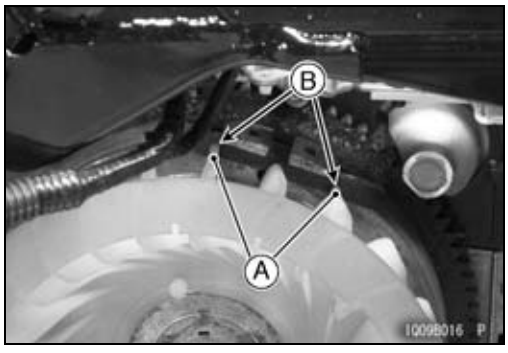

- Insert the projection [A] of the plate in the groove [B] of the alternator rotor.

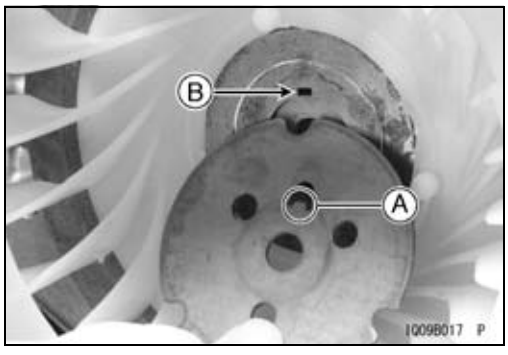

- Install:
  Washer [A] and Alternator Rotor Bolt [B]

○Install the washer as shown.

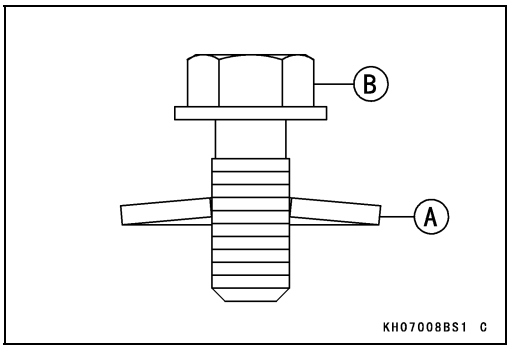

Charging System

- Hold the alternator rotor with a suitable holder [A].
- Tighten:

Torque - Alternator Rotor Bolt [B]: 56 N·m (5.7 kgf·m, 41 ft·lb)

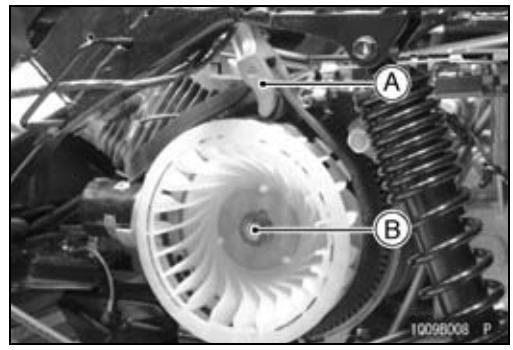

- Install:
  Starter Motor (see Starter Motor Installation)
  Ignition Coil (see Ignition Coil Installation)
- Connect:
  Ignition Coil Lead Connector

- Install:
  Fan Housing

○Fit the stoppers [A] the fan housing.

- Tighten:

Torque - Fan Housing Bolt: 5.9 N·m (0.60 kgf·m, 52 in·lb)

- Install the removed parts.

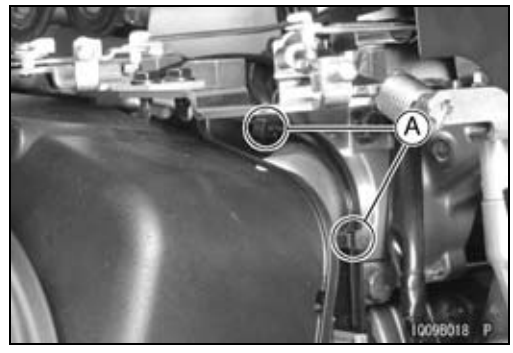

Charging System Operational Inspection

- Check battery condition (see Charging Condition Inspection in the Periodic Maintenance chapter).

NOTE

○*Always check battery condition before condemning other parts of the charging system. The battery must be fully charged in order to conduct accurate charging system tests.*

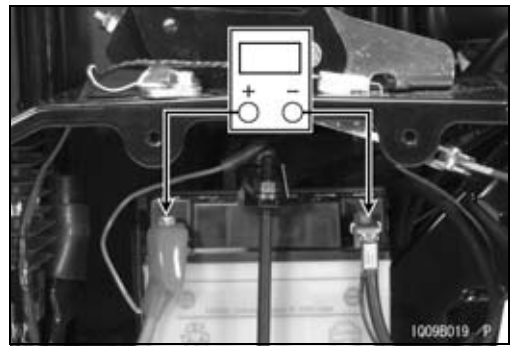

- Warm up the engine to bring the components up to their normal operating temperatures.
- Measure regulator/rectifier output voltage at various engine speeds with the headlights turned on and then turned off.

○Connect a voltmeter across the battery terminals.

- The readings should show nearly battery voltage when the engine speed is low, and as the engine speed rises, the readings should also rise. But they must stay within the specified range.

★If the output voltage is much higher than the specification, the regulator/rectifier is defective, or the regulator/rectifier leads are loose or open.

★If the output voltage does not rise as the engine speed increase then the regulator/rectifier is defective or the alternator output is insufficient for the loads.

Regulator/Rectifier Output Voltage
Standard: Battery Voltage ~ 15 V

Stator Coil Resistance Inspection

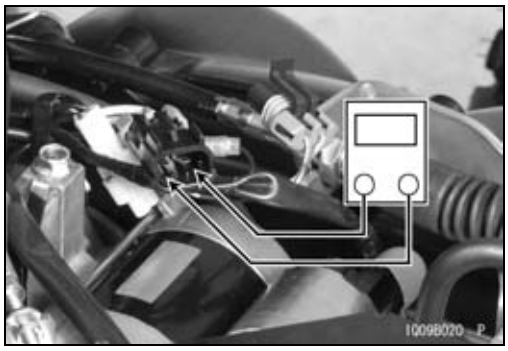

- Disconnect the alternator leads connector.
- Measure the stator coil resistance.

○Connect an ohmmeter between the alternator leads.

Stator Coil Resistance
Standard: 0.3 Ω or less

★If the meter does not read as specified, replace the alternator stator.

★If the coil has normal resistance, but the voltage inspect showed the alternator to be defective; then the rotor magnets have probably weakened, and the rotor must be replaced.

Regulator/Rectifier Inspection (KAF400-A1/B1/C1, A6 ~ A8/B6 ~ B8/C6 ~ C8)

- Remove the regulator/rectifier [A].

Rectifier Circuit Test

- Check the resistance in both directions between the terminals following the table.

Tester Connection	W-G/W1, W-G/W2 BK/Y-G/W1, BK/Y-G/W2

★The resistance should be low in one direction and more than ten times as much in the other direction. If any two terminals are low or high in both directions, the rectifier is defective and must be replaced.

NOTE

○*The actual meter reading varies with the meter used and the individual rectifier, but, generally speaking the lower reading should be from zero to the first 1/2 of the scale.*

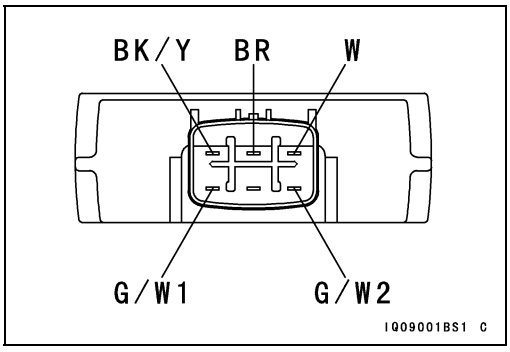

Regulator Circuit Test

- Prepare testing tools:

Test Light	Bulb rated 12 V and 3 ~ 6 W (with socket and leads)
Batteries	Three 12 V batteries
Test Leads	Four auxiliary leads

NOTICE

The test light limits the current flow through the regulator/rectifier. Do not use an ammeter or multimeter in its place.

Charging System

Regulator Circuit Test-1st Step:
- Connect the test light and the 12 V battery to the regulator/rectifier as shown.
- Check G/W1 and G/W2 terminals respectively.

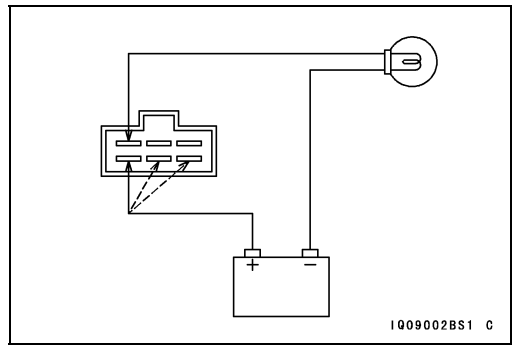

NOTICE
The test light limits the current flow through the regulator/rectifier. Do not use an ammeter or multimeter in its place.

★If the test light turns on, the regulator/rectifier is defective. Replace it.
★If the test light does not turn on, continue the test.

Regulator Circuit Test-2nd Step:
- Connect the test light and the 12 V battery in the manner as specified in the "Regulator Circuit Test-1st Step."
- Apply 12 V to BR terminal.
- Check G/W1 and G/W2 terminals respectively.

★If the test light turns on, the regulator/rectifier is defective. Replace it.
★If the test light does not turn on, continue the test.

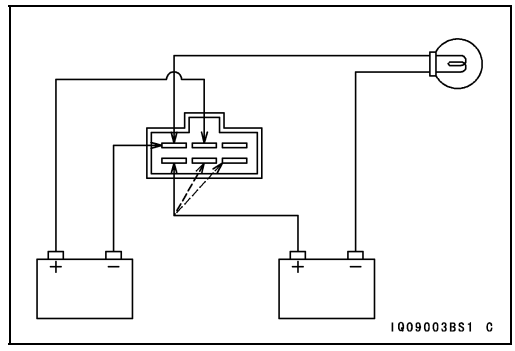

Regulator Circuit Test-3rd Step:
- Connect the test light and the 12 V battery in the same manner as specified in the "Regulator Circuit Test-1st Step."
- Momentarily apply 24 V to BR terminal by adding a 12 V battery.
- Check G/W1 and G/W2 terminals respectively.

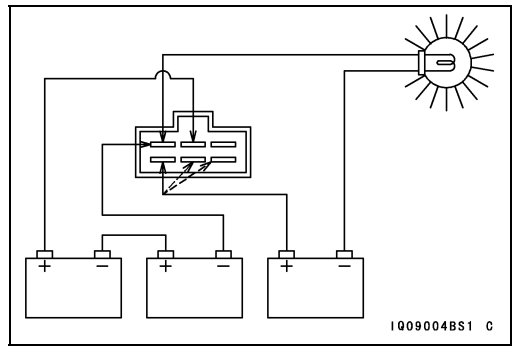

NOTICE
Do not apply more than 24 V to the regulator/rectifier and do not leave the 24 V applied for more than a few seconds, or the unit will be damaged.

★If the test light did not light when the 24 V was applied momentarily to the BR terminal, the regulator/rectifier is defective. Replace it.
★If the regulator/rectifier passes all of the tests described, it may still be defective. If the charging system still does not work properly after checking all of the components and the battery, test the regulator/rectifier by replacing it with a known good unit.

Regulator/Rectifier Inspection (KAF400A9 ~/B9 ~/C9 ~ CA)

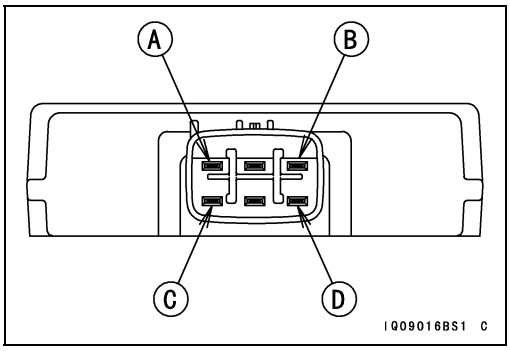

- Remove:
  Regulator/Rectifier (see Regulator/Rectifier Removal)
- Set the hand tester to the × 1 kΩ range and make the measurements shown in the table.

  Special Tool - Hand Tester: 57001-1394
- Connect the hand tester to the regulator rectifier.

★If the tester readings are not as specified, replace the regulator/rectifier.

NOTICE
Use only Kawasaki Hand Tester 57001-1394 for this test. A tester other than the Kawasaki Hand Tester may show different readings. **If a megger or a meter with a large capacity battery is used, the regulator/rectifier will be damaged.**

Regulator/Rectifier Resistance **(Unit: kΩ)**

		Tester (+) Lead Connection			
	Terminal	A	B	C	D
(–)*	A	–	11	8	8
	B	∞	–	∞	∞
	C	∞	8	–	∞
	D	∞	8	∞	–

(–)*: Tester (–) Lead Connection

Charging System Troubleshooting

- Before inspection, remove all accessories that consume electrical power.

NOTE

○*Even when the charging system is working properly, the battery may discharge if the vehicle is equipped with too many accessories.*

- Pay attention to riding conditions and the customer's riding habits which could affect the charging system such as:

  Frequent use at low engine speed
  Frequent and unnecessary brake pedal dragging
  → Battery Discharged

- Recharge the battery if it is discharged.

Charging System

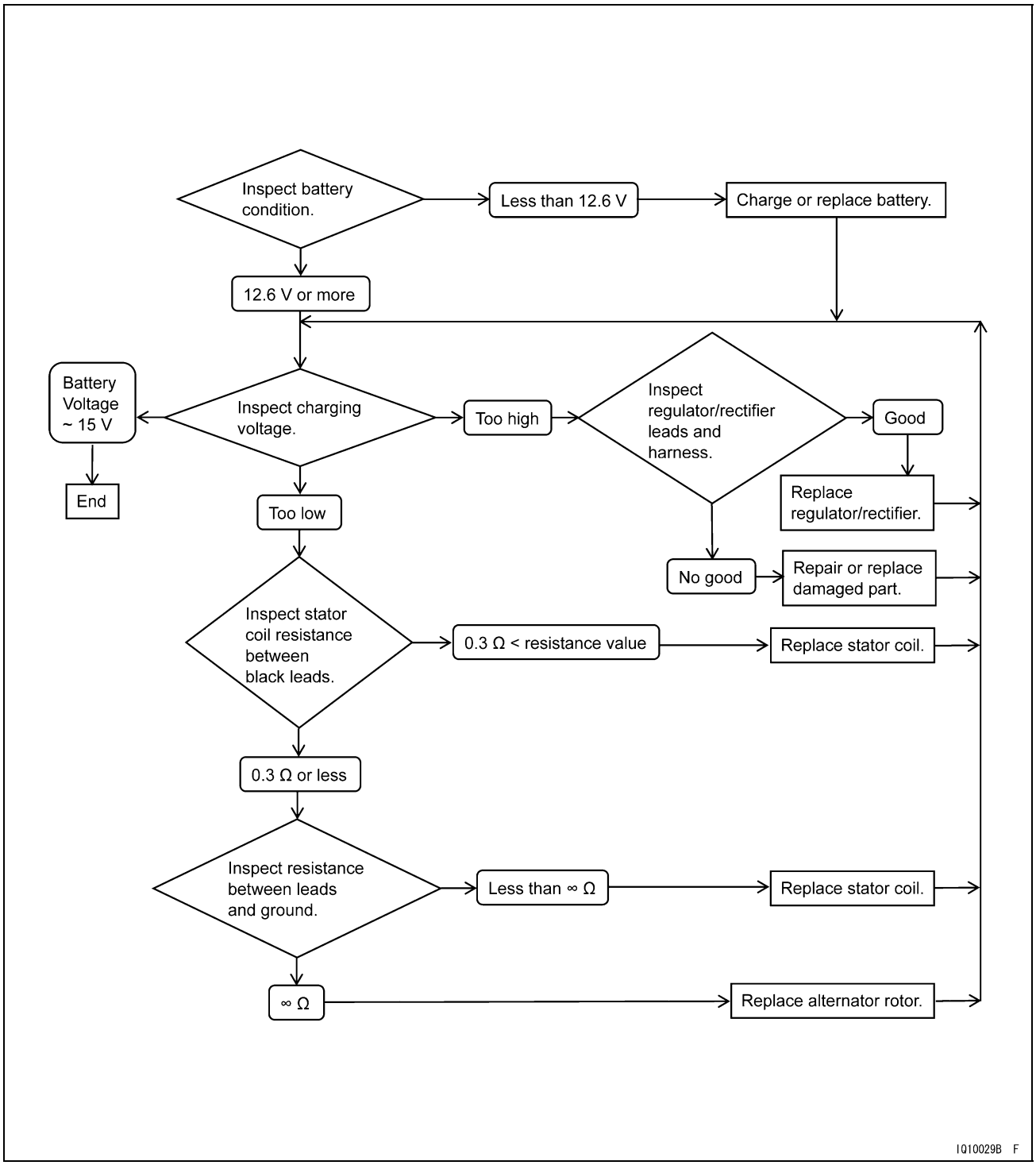

Charging System

Charging System Circuit

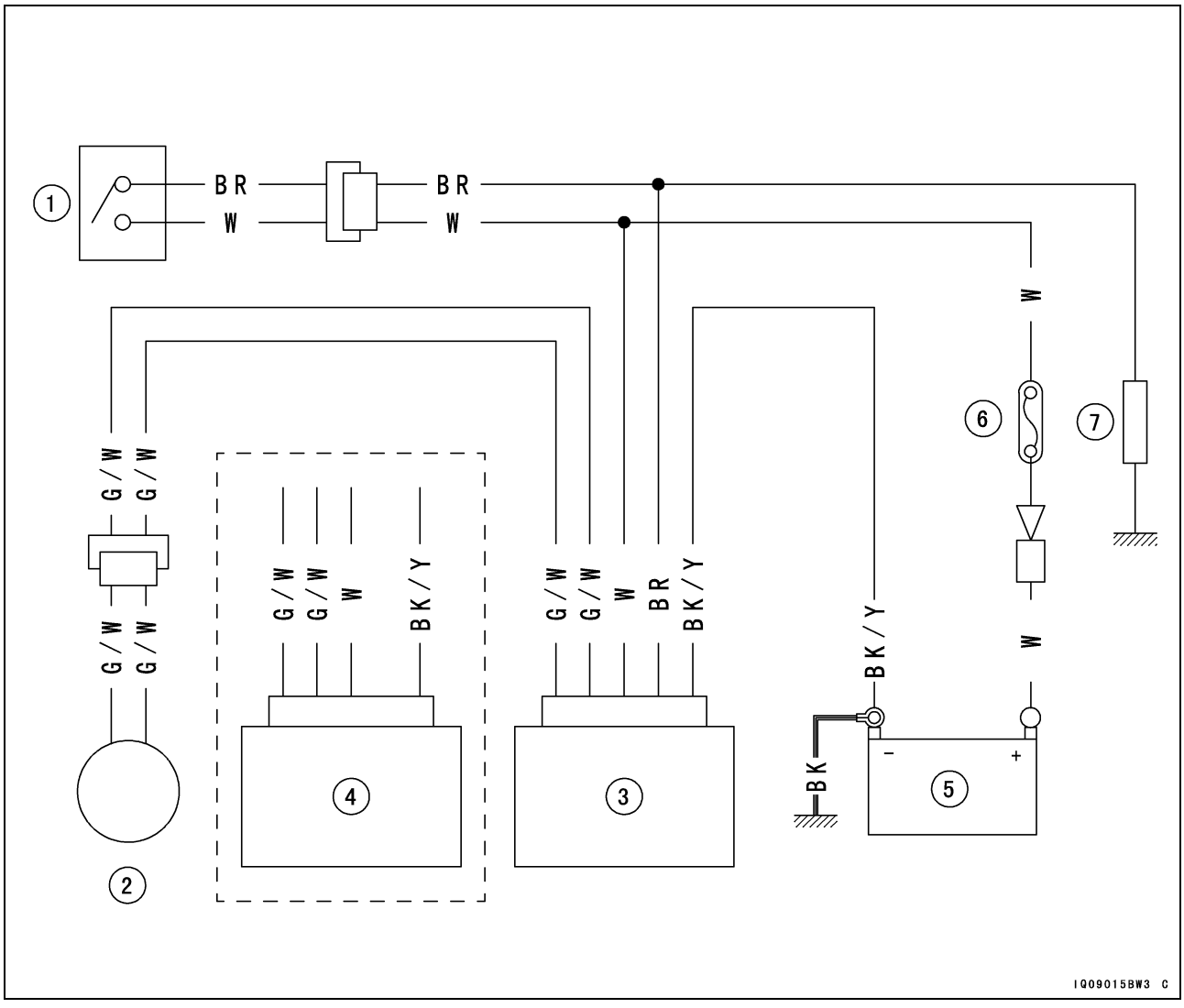

1. Ignition Switch
2. Alternator
3. Regulator/Rectifier (KAF400-A1/B1/C1, A6 ~ A8/B6 ~ B8/C6 ~ C8)
4. Regulator/Rectifier (KAF400A9 ~/B9 ~/C9 ~ CA)
5. Battery
6. 30 A Fuse
7. Load

Ignition System

⚠ WARNING

The ignition system produces extremely high voltage. Do not touch the spark plug, ignition coil or ignition coil lead while the engine is running, or you could receive a severe electrical shock.

NOTICE

Do not disconnect the battery leads or any other electrical connections when the ignition switch is on, or while the engine is running. This is to prevent IC igniter damage.
Do not install the battery backwards. The negative side is grounded. This is to prevent damage to the diodes and IC igniter.

Spark Plug Removal

- Remove:
  Guard Plate (see Frame chapter)
  Spark Plug Cap [A]
- Remove the spark plug using the plug wrench [B].

Special Tool - Spark Plug Wrench, Hex 21: 57001-110

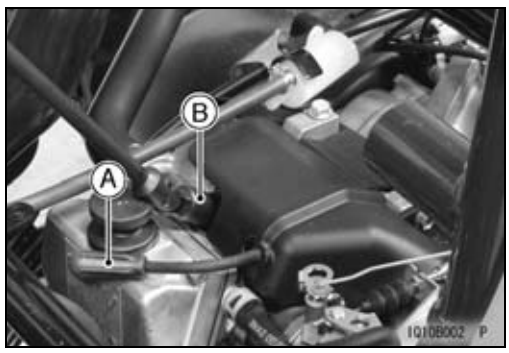

Spark Plug Installation

- Tighten:

Torque - Spark Plug: 22 N·m (2.2 kgf·m, 16 ft·lb)

- Fit the spark plug cap securely.
- Pull up the spark plug cap lightly to make sure of the installation of the spark plug cap.

Spark Plug Cleaning/Inspection

- Refer to the Spark Plug Cleaning/Inspection in the Periodic Maintenance chapter.

Spark Plug Gap Inspection

- Refer to the Spark Plug Gap Inspection in the Periodic Maintenance chapter.

Ignition Coil Removal

- Remove:
  Alternator Cover (see Alternator Rotor and Stator Removal).
  Ignition Coil Lead Connector [A] (disconnect)
  Ignition Coil Bolts [B]
  Ignition Coil [C]

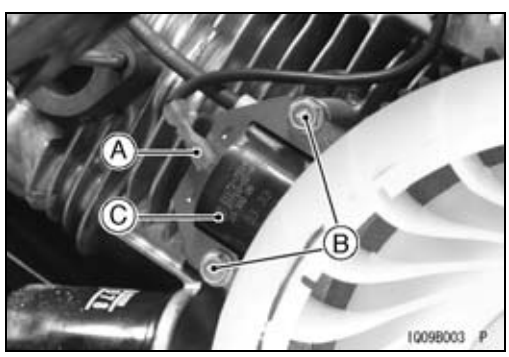

Ignition System

Ignition Coil Installation

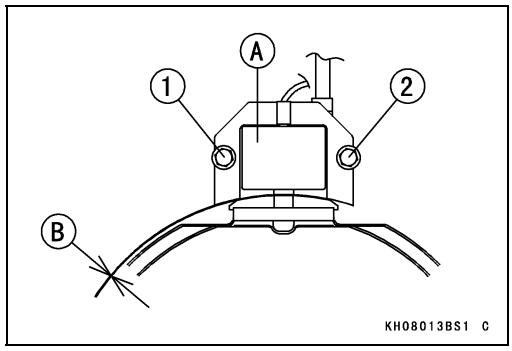

- Install:
  Ignition Coil [A]
  Ignition Coil Bolts
- While tightening the bolts, adjust the air gap [B] between the leg of ignition coil and the magnet to the specified gap value as shown.

Ignition Coil Air Gap
Standard: 0.2 ~ 0.4 mm (0.0079 ~ 0.0157 in.)

- Tighten the ignition coil bolts following the tightening sequence [1 ~ 2].

Torque - Ignition Coil Bolts: 5.9 N·m (0.60 kgf·m, 52 in·lb)

NOTE

○*Above procedure must be used to insure proper coil air gap is not too large.*

Ignition Coil inspection

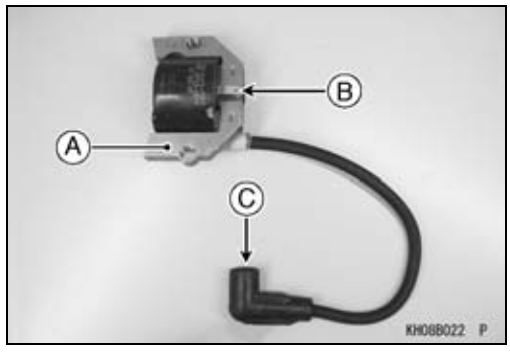

- Remove the ignition coil (see Ignition Coil Removal).
- Measure the winding resistance as follows.

○Set the hand tester to the R × 1 kΩ range.

Special Tool - Hand Tester: 57001-1394

○Make the measure shown in the table.

Ignition Coil Winding Resistance

+ / –	A	B	C
A	–	2 ~ 18 kΩ	2 ~ 18 kΩ
B	∞	–	∞
C	2 ~ 18 kΩ	10 ~ 30 kΩ	–

NOTICE

Use only Tester 57001-1394 with new battery at room temperature for this test. A tester other than the Kawasaki Hand Tester may show different readings.
If a meter with a large-capacity battery is used, the ignition coil will be damaged.

★If the tester does not read as specified, replace the coil.

Ignition System

Ignition System Circuit

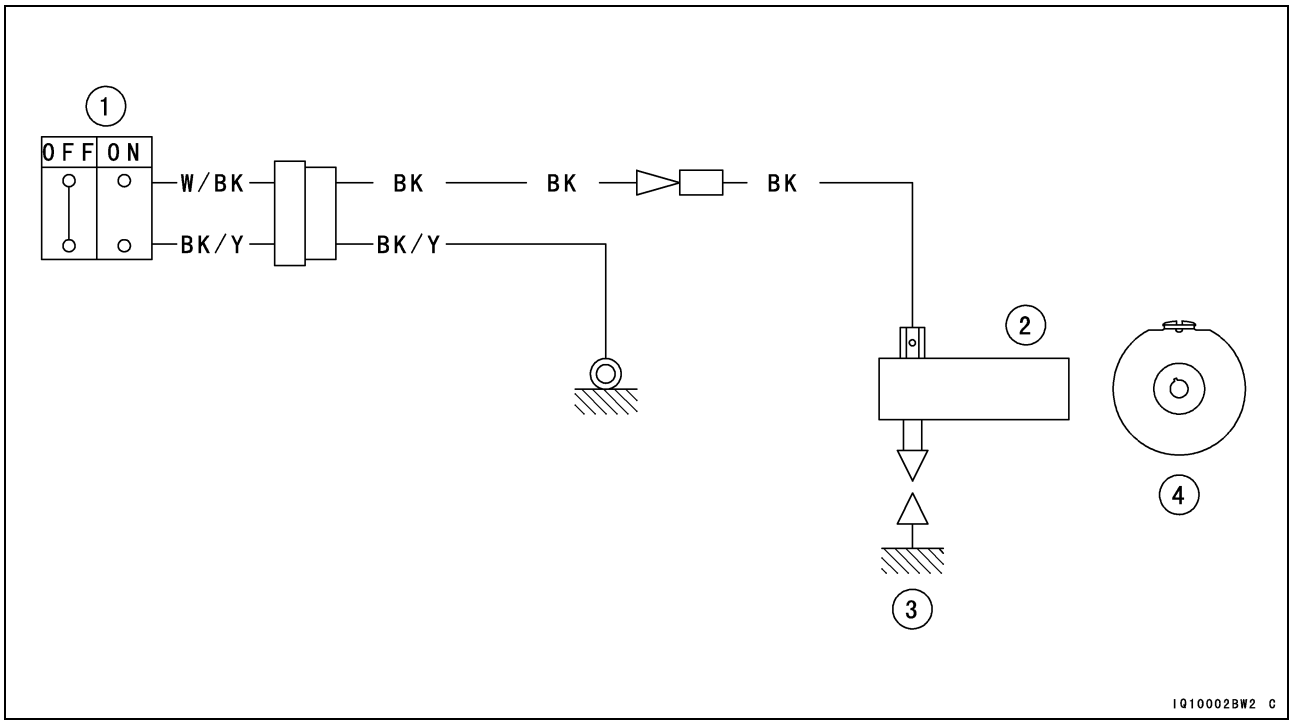

1. Ignition Switch
2. Ignition Coil
3. Spark Plug
4. Alternator Rotor

Electric Starter System

Starter Motor Removal

- Remove:
  Torque Converter Case (see Converter System chapter)
  Connecting Plate Bolts [A]
  Connecting Plate [B]

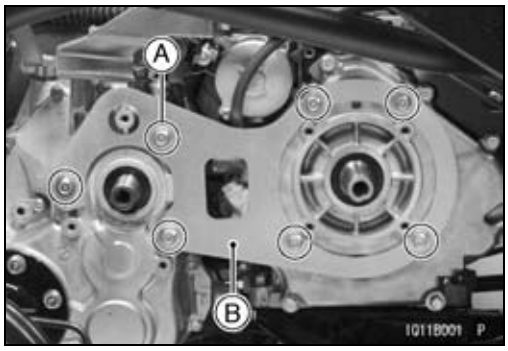

- Remove:
  Governor Cover [A]
  Transmission Shift Cable End Lever [B]
  Holder [C]

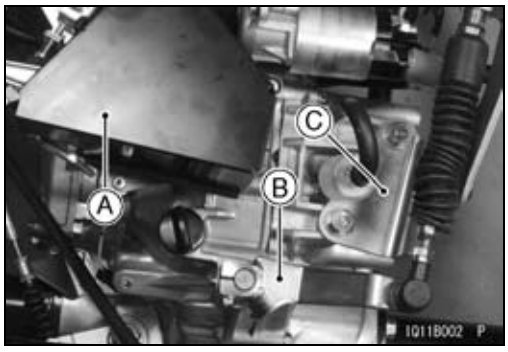

- Remove:
  Starter Motor Cable [A] and Connector [B]
- Disconnect:
  Hose [C]

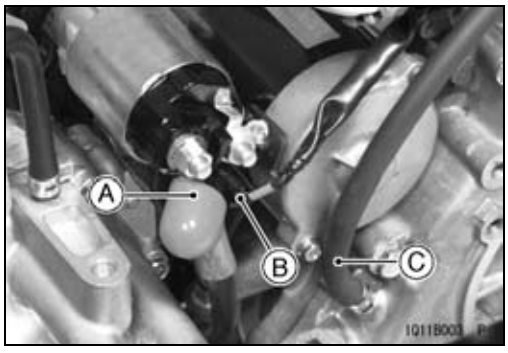

- Remove:
  Starter Motor Mounting Bolts [A]
  Starter Motor [B]

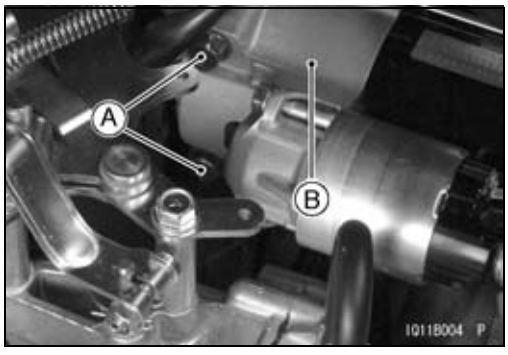

Starter Motor Installation

- Clean the mating surface of the starter motor [A] and the crankcase [B] where the starter motor is grounded.

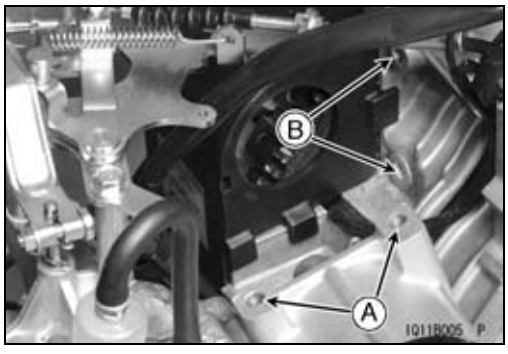

Electric Starter System

- Install the starter motor [A] to the engine as shown.
- Tighten:

Torque - Starter Motor Mounting Bolts: 17 N·m (1.7 kgf·m, 12 ft·lb)

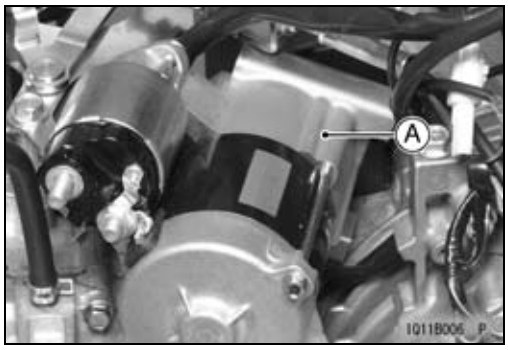

Starter Solenoid Inspection

NOTE

○*Be sure the battery is fully charged.*

- Remove:
  Starter Motor (see Starter Motor Removal)
- Disconnect the starter motor lead [A].

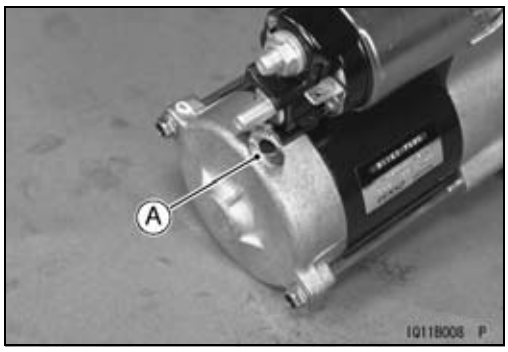

- Connect a tester [A] and a 12 V battery to the starter motor solenoid [B] as shown.

○Set the tester to ×1 Ω range, connect the tester leads to the stud terminals [C].

○Connect the battery:
  (+) Terminal to Solenoid Terminal [D]
  (–) Terminal to Solenoid Body [E]

★If the solenoid does not work as specified as follows, the solenoid is defective. Replace the solenoid.

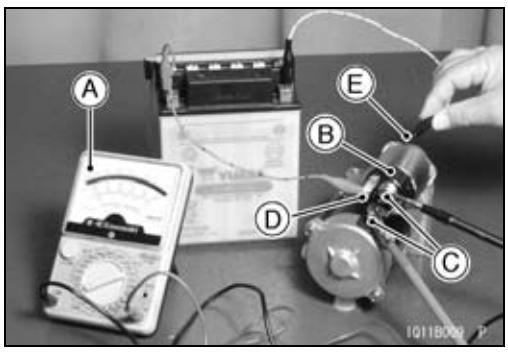

Testing Solenoid

Tester Range: × 1 Ω

Criteria: When battery is connected → click sound and 0 Ω

When battery is disconnected → ∞ Ω

Starter Motor Inspection

- Inspect the starter solenoid (see Starter Solenoid Inspection).
- Hold the starter motor in a vise.

NOTICE
Be careful not to deform the starter motor body when holding it in a vise.

- Install:
  Starter Motor Lead [A]
  Nut [B]

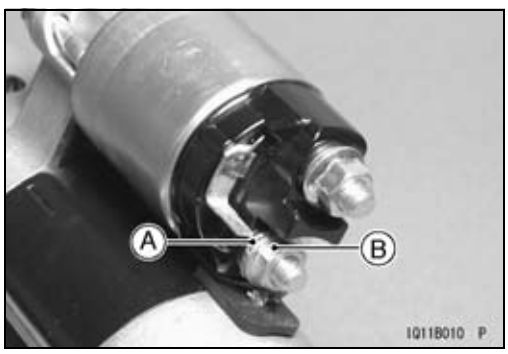

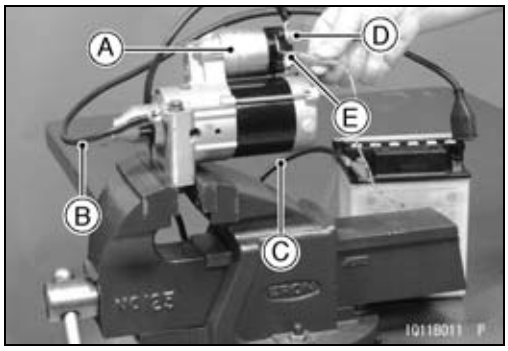

- Connect a 12 V battery to the starter solenoid [A] as shown.

○Connect the battery negative (–) cable [B] to the starter motor body.

○Connect the battery positive (+) cable [C] to the stud terminal [D].

- Connect the switching lead [E] to the battery positive (+) terminal.

Testing Starter Motor

Criteria: **When switching lead is connected → Pinion gear must move outward.**

When switching lead is disconnected → Pinion gear must return quickly.

★If the starter motor does not work as specified, the starter motor is defective. Replace the starter motor.

Starter Motor Disassembly

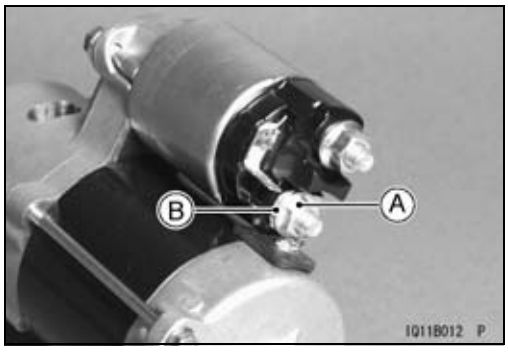

- Remove:
  Starter Motor (see Starter Motor Removal)
  Starter Motor Lead Nut [A]
  Starter Motor Lead [B]

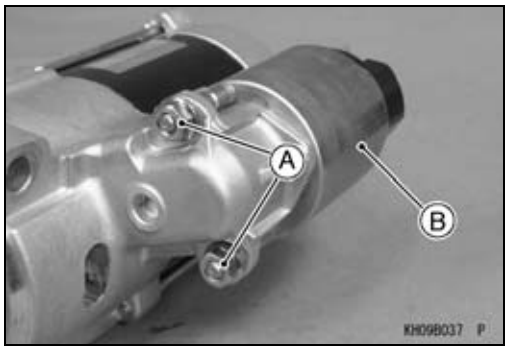

- Remove:
  Nuts [A]
  Starter Solenoid [B]

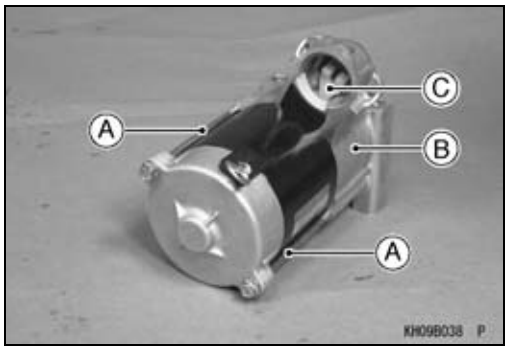

- Remove:
  Starter Motor Through Bolts [A]
  Pinion Gear Cover [B]
- Slip the actuating arm [C] from the pinion gear.

Electric Starter System

- Pull the armature [A] from the yoke [B].

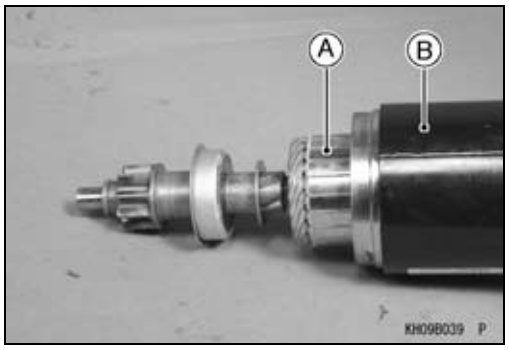

- Separate the front stopper [A] and rear stopper [B] each other and remove the front stopper to left side [C] as shown the figure.
- Push the rear stopper to right side [D] and remove the snap ring [E] as shown the figure.
- Pull the rear stopper and pinion gear [F] from the armature shaft.

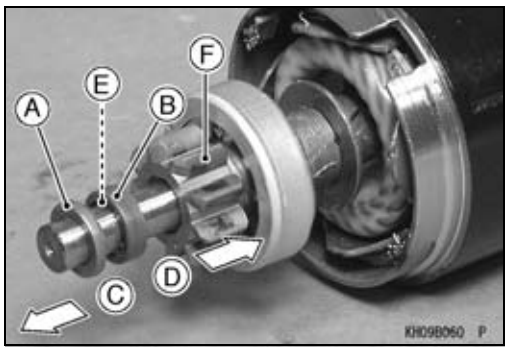

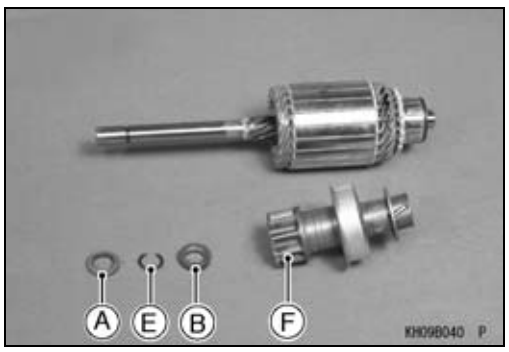

- Gently pull the end cover [A] from the yoke and remove the insulator [B].

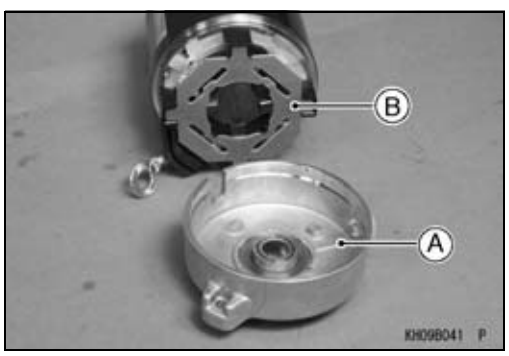

- Using a needle nose pliers, remove the brush springs [A] from the brush holder [B].
- Separate the brushes [C] from the holder and remove the holder from the yoke [D].

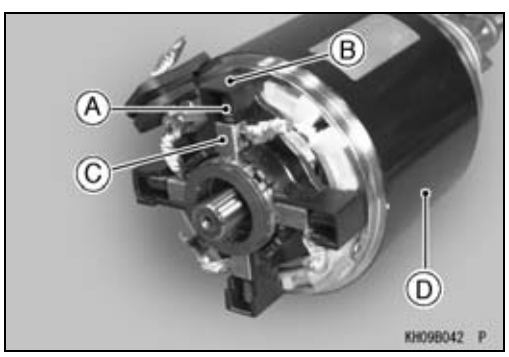

Electric Starter System

Starter Motor Assembly

- Apply a small amount of grease to the armature shaft [A] as shown.
- Do not reuse the snap ring [B]. Replace it with a new one.

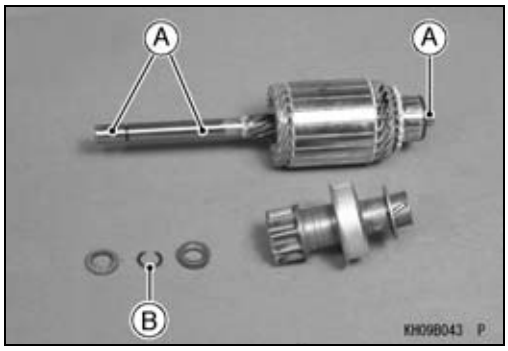

- Inspect the rubber insert [A] and/or boot [B] for visible damage.

★If they are damaged, replace them.

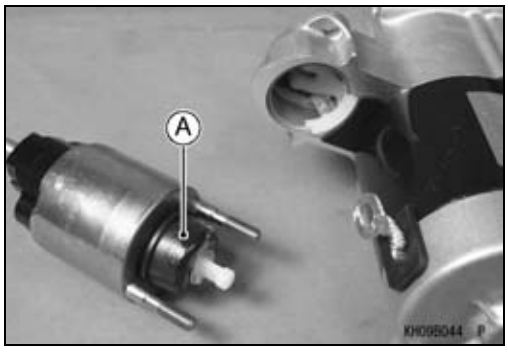

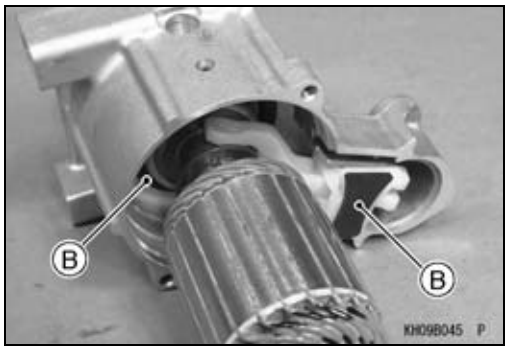

- Fit the notch [A] in the (-) lead grommet onto the projection [B] on the end cover [C].

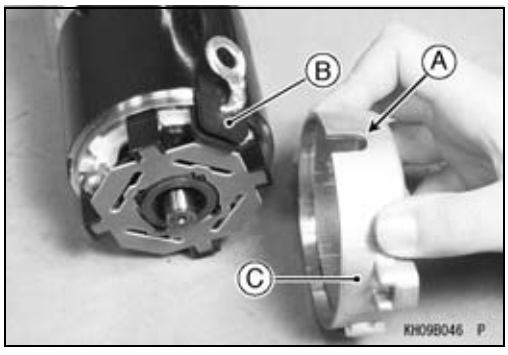

- Grease the pinion gear fork fingers.
- Set the pinion gear fork so that the fingers fit into the groove in the gear.
- Fit the notch [A] in the yoke onto the projection [B] on the pinion gear fork.

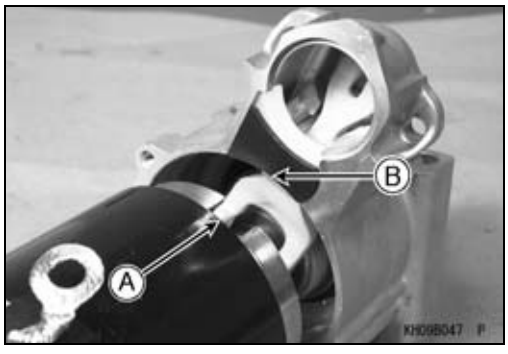

Electric Starter System

- Engage the hook on the starter solenoid with the hook [A] on the pinion gear fork [B].

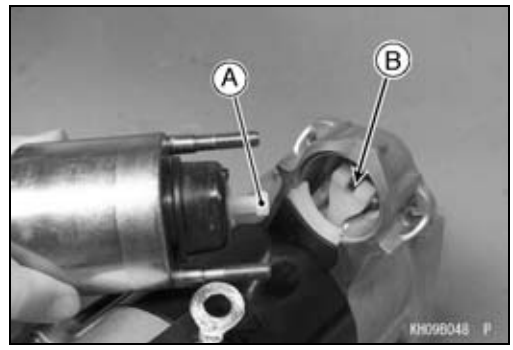

Starter Motor Brush Inspection

- Measure the overall length of each brush [A].

★If the brushes are shorter than the service limit, replace them.

Carbon Brush Length

Standard:	**10 mm (0.394 in.)**
Service Limit:	**6 mm (0.236 in.)**

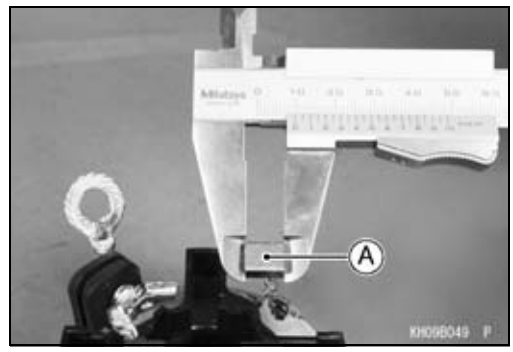

Brush Spring Inspection

- Inspection the brush springs for pitting, cracks, rusting and burrs. Replace the spring if necessary.
- Inspect the springs for weakened conditions and distortion. Replace the springs if necessary.

★If the brush springs are able to press the brushes firmly into place, they may be considered serviceable. If they cannot, replace them.

Armature Inspection

- Inspect the surface of the commutator [A].

★If it is scratched or dirty, polish it with a piece of very fine emery cloth [B], and clean out the grooves.

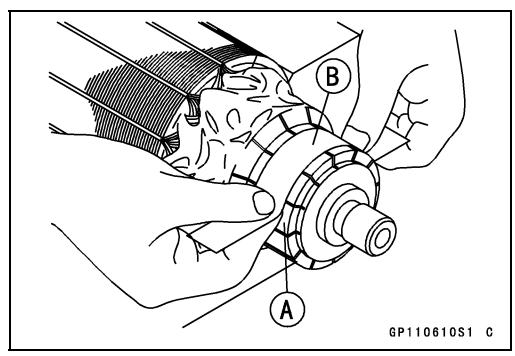

- Measure the depth of the grooves between the commutator segments.

★If the grooves are shallower than the specified limit, undercut the insulating material to the standard depth 0.5 to 0.8 mm (0.012 to 0.031 in) using a thin file.

★If the grooves are only dirty, clean them carefully.

Commutator Groove Depth

Standard:	**0.5 ~ 0.8 mm (0.020 ~ 0.031 in.)**
Service Limit:	**0.2 mm (0.008 in.)**

Bad [A]
Segment [B]
Good [C]
0.2 mm (0.008 in.) limit [D]
Mica [E]

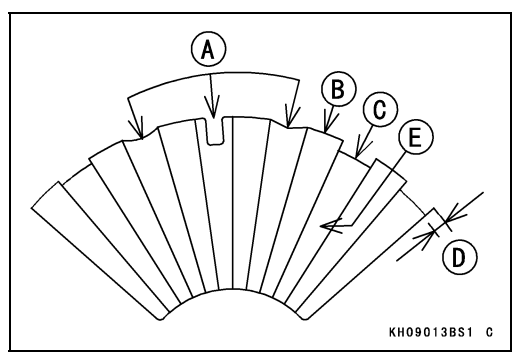

- Measure the commutator [B] outside diameter [A] at several points.

★If the diameter is less than the service limit, replace the armature with a new one.

Commutator Outside Diameter
Standard: 28 mm (1.102 in.)
Service Limit: 27 mm (1.063 in.)

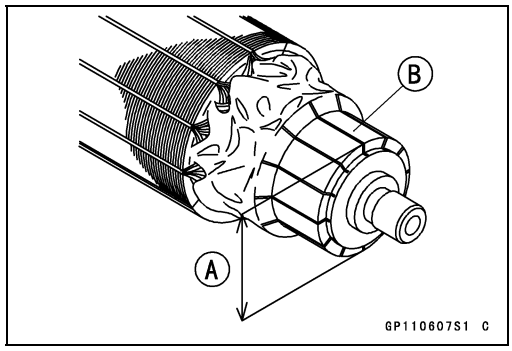

- Support the armature in an alignment jig at each end of the shaft as shown. Position a dial indicator perpendicular to the commutator.
- Rotate the armature slowly and read the commutator runout.

★If runout is more than the service limit, replace the armature with a new one.

Commutator Runout
Service Limit: 0.4 mm (0.016 in.)

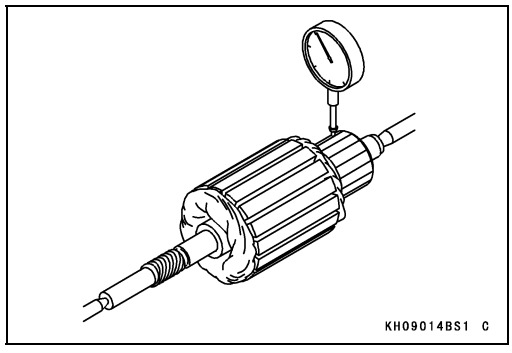

- Measure the armature winding resistance.

○Set the multimeter selector switch to the R × 1 Ω position and check the resistance between each segment and all the others.

★If the resistance it too high or even infinite, the armature winding has an open circuit. Replace the starter motor.

Armature Winding Resistance
Close to 0 Ω

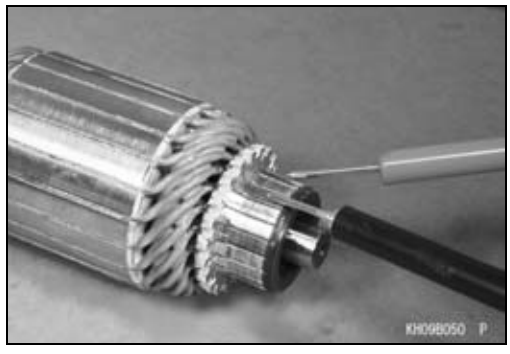

- Set the multimeter selector switch to the R × 1 kΩ position and measure the resistance between the commutator and the armature shaft.

★If the resistance is less than infinite, the armature is shorted.

Commutator to Shaft Resistance
(∞)

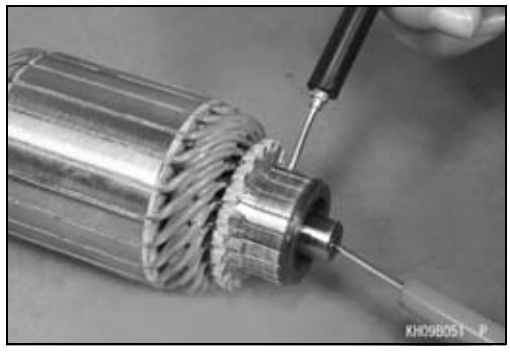

- Test the armature winding for shorts.

○Place the armature on a growler [A].

○Hold a thin metal strip (e.g., hack saw blade) on top of the armature.

○Turn on the growler and rotate the armature one complete turn.

★If the metal strip vibrates, the windings are internally shorted to each other and the starter motor must be replaced.

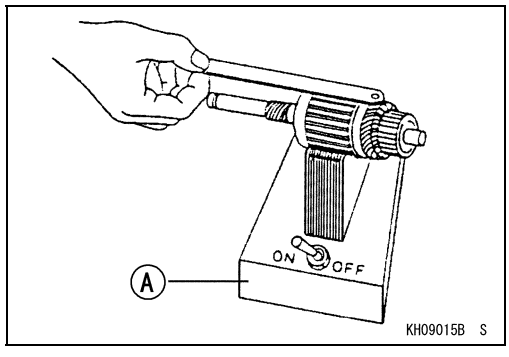

Electric Starter System

Yoke Assembly Inspection

- Set the multimeter selector switch to the R × 1 kΩ position and measure the resistance between the positive brushes and stator motor yoke.

★If the resistance is less than infinite, the positive brush is shorted to ground. Replace the yoke assembly.

Positive Brush to Ground Resistance
(∞)

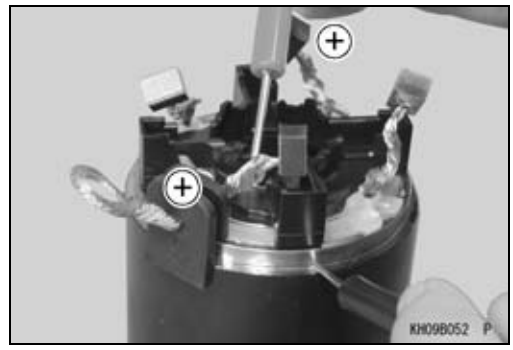

- Set the multimeter selector switch to the R × 1 Ω position and measure the resistance between the negative brushes and starter motor yoke.

★If the meter dose not read close to 0 Ω, the yoke assembly is faulty. Replace it.

Negative Brush to Ground Resistance
Close to 0 Ω

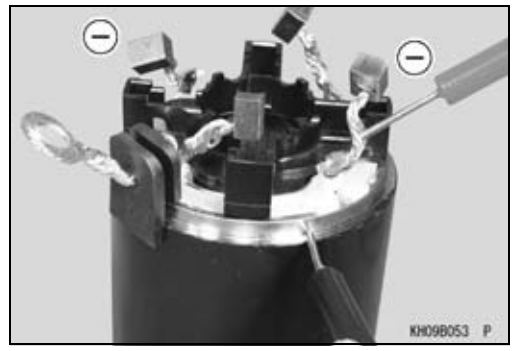

Pinion Clutch Inspection

- Remove the pinion clutch.
- Turn the pinion gear by hand. The pinion gear should turn counterclockwise freely, but should not turn counterclockwise.

★If the pinion clutch dose not operate as it should, or if it makes noise, replace the pinion clutch.

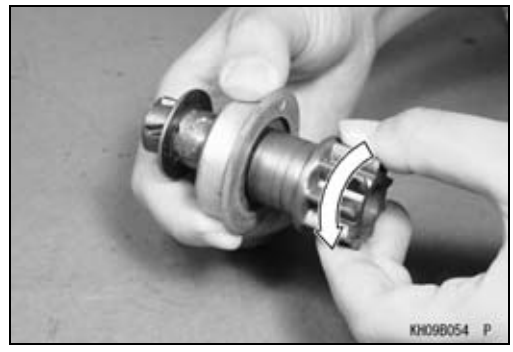

Starter Circuit Relay Inspection

- Remove:
  Starter Circuit Relay (Neutral) [A]
  Starter Circuit Relay (Brake) [B]

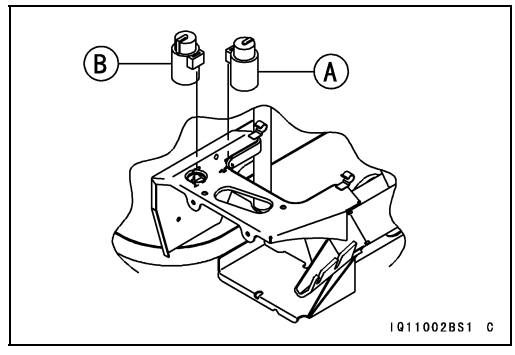

Electric Starter System

- Connect a digital meter [A] and 12 V battery [B] to the starter circuit relay [C] as shown.

★If the relay does not work as specified, the relay is defective. Replace the relay.

Testing Relay

Tester Range: × 1 Ω

Criteria: When battery is connected ⇒ 0Ω

When battery is disconnected ⇒ ∞Ω

Relay Coil Terminals [1] and [2]

Relay Switch Terminals [3] and [4]

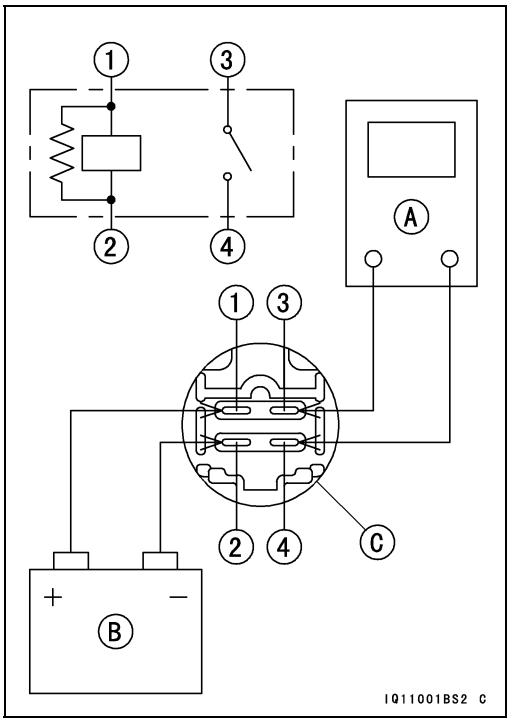

Electric Starter System

Electric Starter Circuit

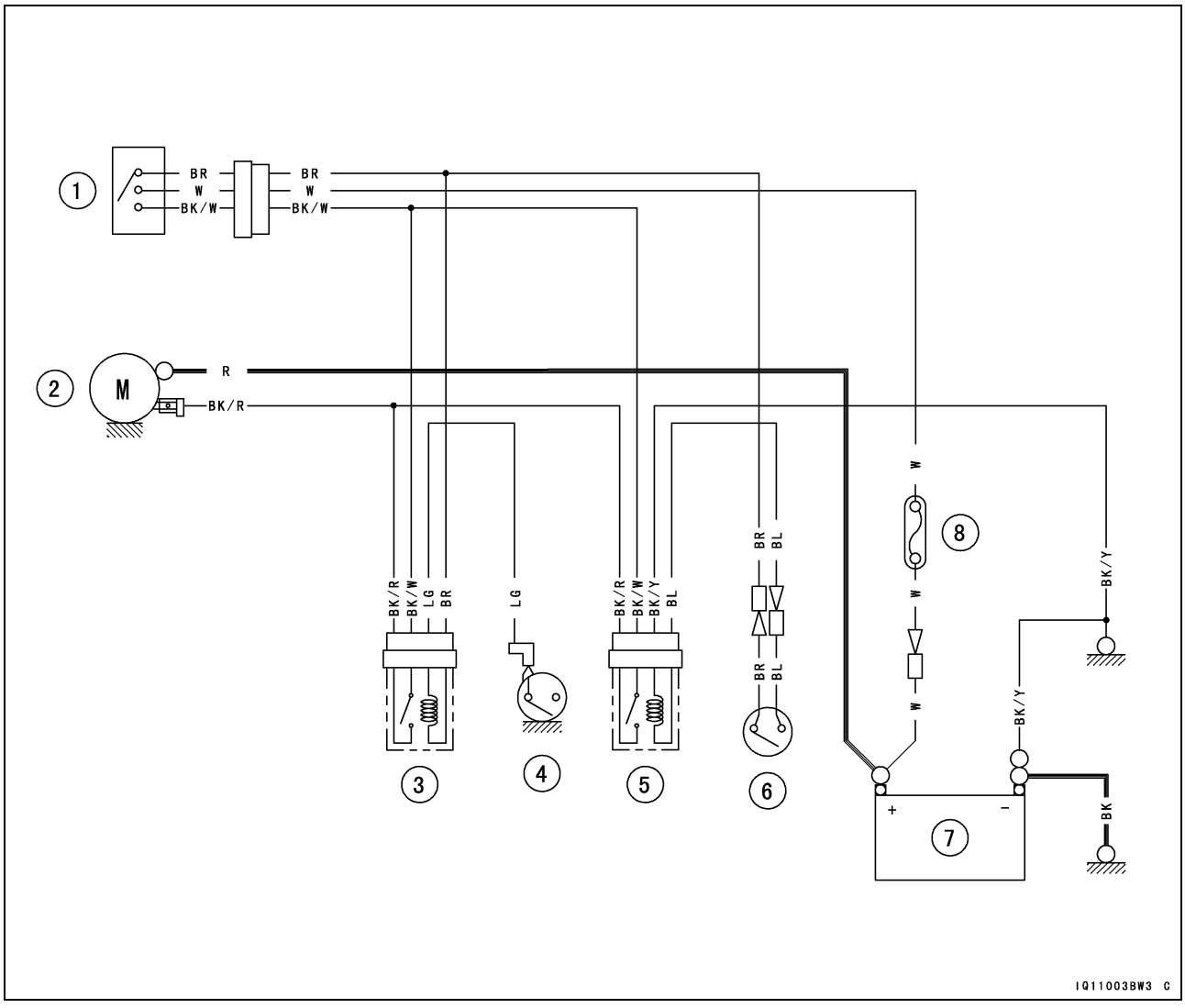

1. Ignition Switch
2. Starter Motor (with Relay)
3. Starter Circuit Relay (Neutral)
4. Neutral Switch
5. Starter Circuit Relay (Brake)
6. Brake Light Switch
7. Battery
8. 30 A Fuse

Lighting System

Headlight Beam Adjustment

- Turn the adjusting screw [A] on each headlight rim in or out to adjust the headlight vertically.

Headlight Bulb Replacement

- Remove:
  Screws [A]
  Collar [B]
  Headlight Assembly [C]

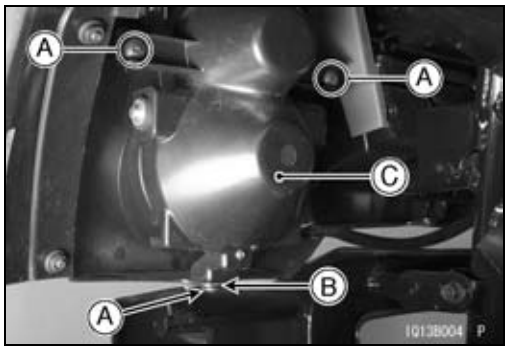

- Remove:
  Adjusting Screw [A]
  Bolts [B] and Washers
  Headlight Cover [C]

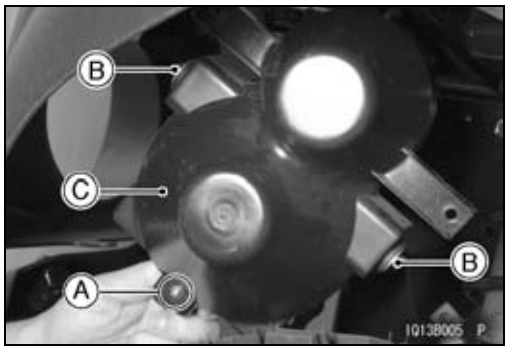

- Disconnect:
  Connectors [A]

- Remove:
  Dust Cover [A]
- Push and turn the bulb holder [B] counterclockwise and remove it.

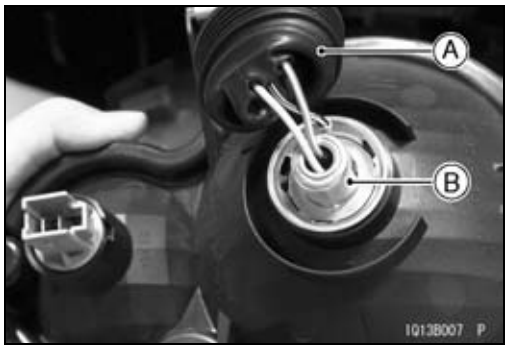

Lighting System

- Remove:
  Headlight Bulb [A]

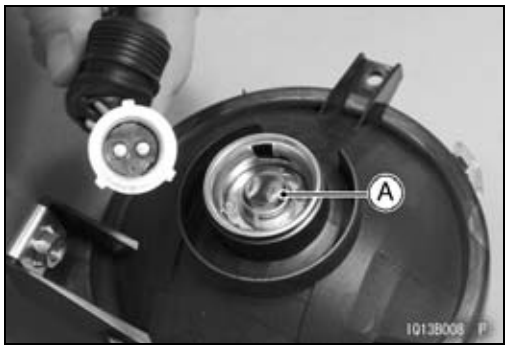

- Insert the new bulb [A] by aligning the tang [B] with the notch [C] in the head light unit.

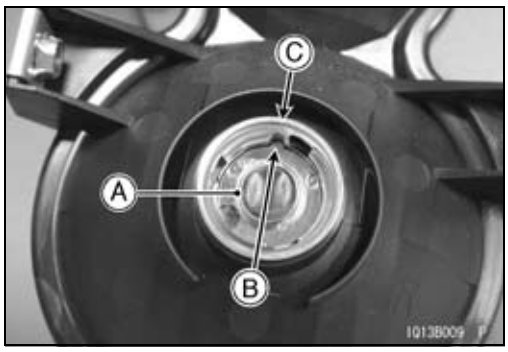

- Insert the bulb holder [A] by aligning the tangs [B] with the notches [C] in the head light unit.
- Push and turn the bulb holder counterclockwise and remove it.

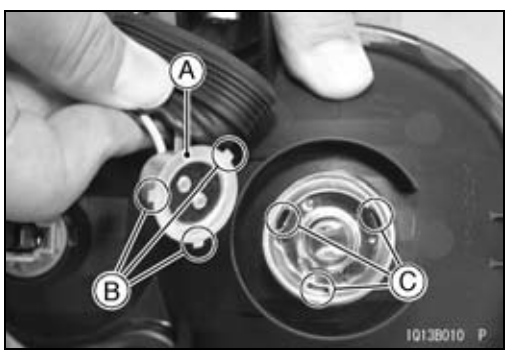

- Fit the dust cover [A] with the TOP mark [B] upward (to position light) firmly.

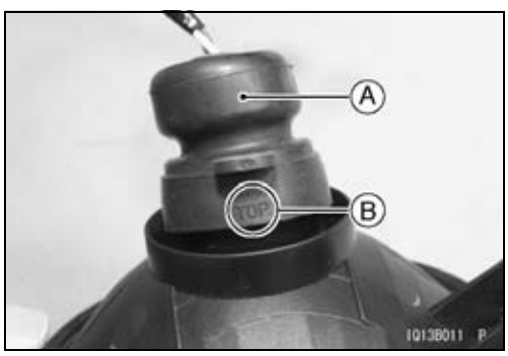

- Push and turn the bulb socket [A] counterclockwise and remove it.

Lighting System

- Remove the wedge-base type bulb [A]; pull the bulb straight out of the socket [B].

NOTICE
Do not turn the bulb. Pull the bulb out to prevent damage to the bulb. Do not use bulb rated for greater wattage than the specified value.

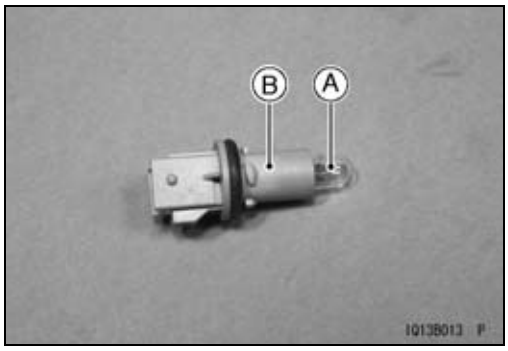

- Insert the bulb socket [A] by aligning the longer projections [B] with the longer recesses [C] in the head light body.

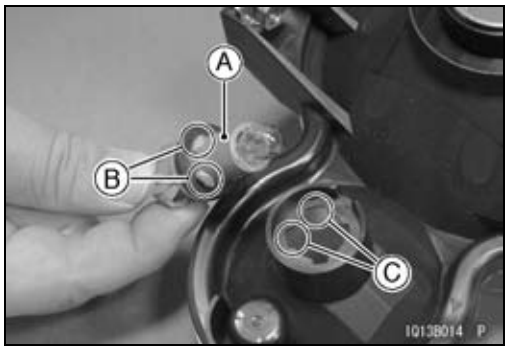

- Install:
  Spring [A] and Adjusting Screw
- Install the nut [B] so that the flat side faces upward.

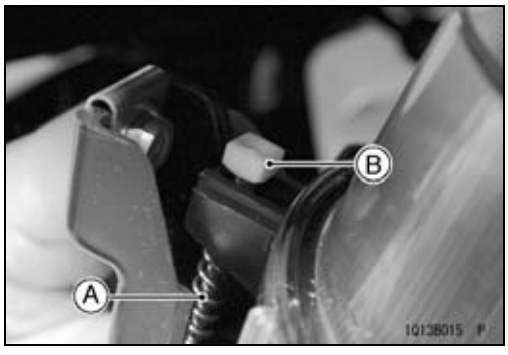

- Insert the headlight lead [A] in the grommet [B], and install it in the headlight body.

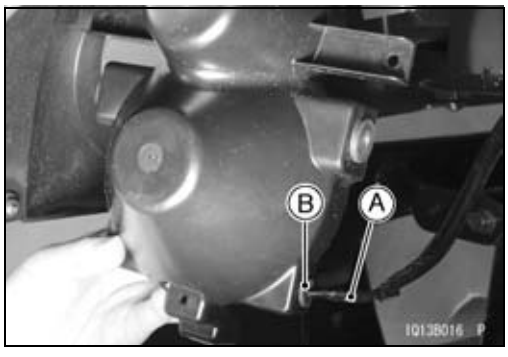

Lighting System

- Install the removed parts.
  Nuts [A]
  Dampers [B]
  Collars [C]
  Washers [D]
  Bolts [E]
  Collar [F]
  Screws [G]

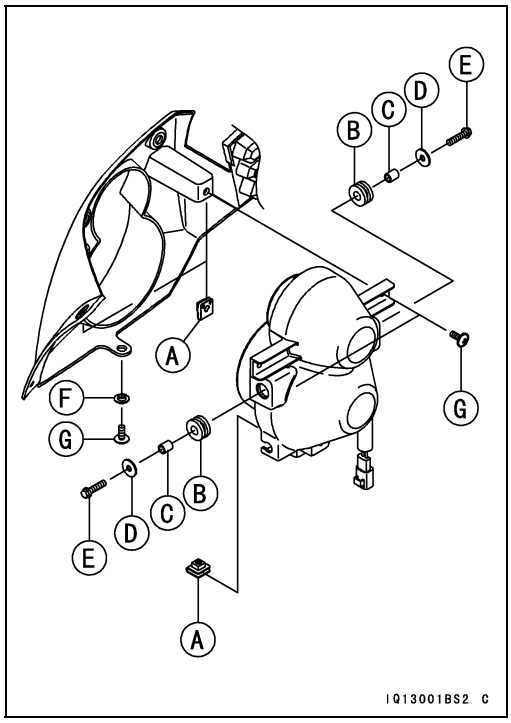

Tail/Brake Light Replacement

- Remove:
  Screws [A]
  Tail/Brake Light Lens [B]

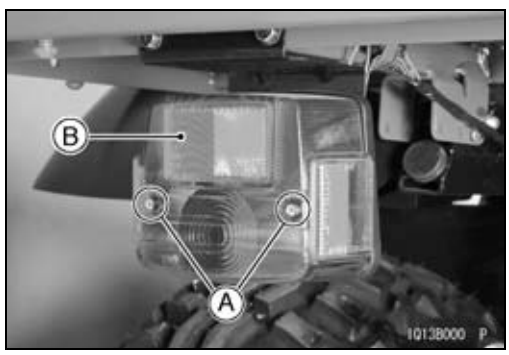

- Push the bulb [A] in, turn it counterclockwise, and pull it out of the socket.

NOTICE
Do not use bulbs rated for greater wattage than the specified value.

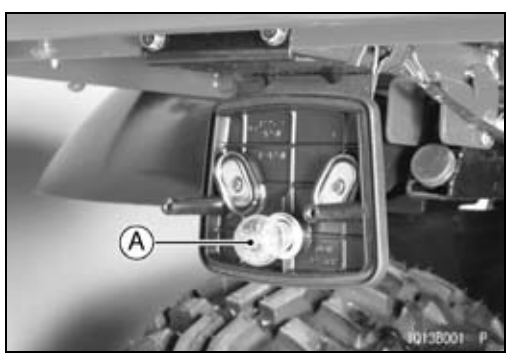

- Insert the new bulb by aligning the pins [A] with the grooves in the walls of the socket.
- Push the bulb in, turn it clockwise, and release it. It should be lock in position.
- Install:
  Tail/Brake Light Lens
  Screws

○Be careful not to overtighten the lens mounting screws.

Lighting System

Light Switch Bulb Replacement

- Remove:
  Front Cargo Compartment (see Frame chapter)
- Turn the socket [A] counterclockwise, and pull it with the bulb.

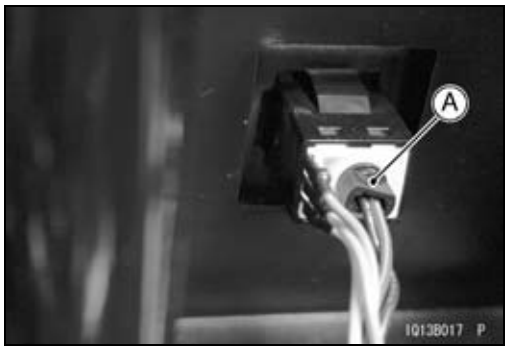

- Pull the bulb [A] out of the socket.

NOTICE
Do not turn the bulb. Pull the bulb out to prevent damage to the bulb. **Do not use bulb rated for greater wattage than the specified value.**

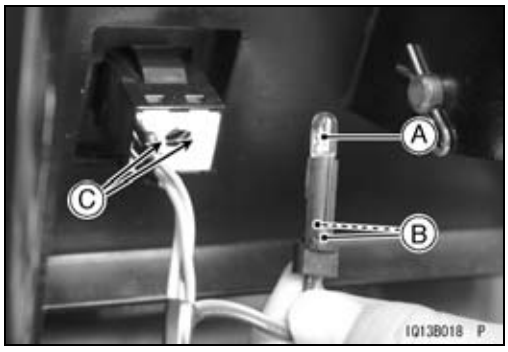

- Insert the new bulb in the socket.
- Align the projections [B] of the socket with the recesses [C] in the switch body, and turn the socket clockwise.

Indicator Light Bulb Replacement

- Remove:
  Light Assembly [A]
  Lens [B]

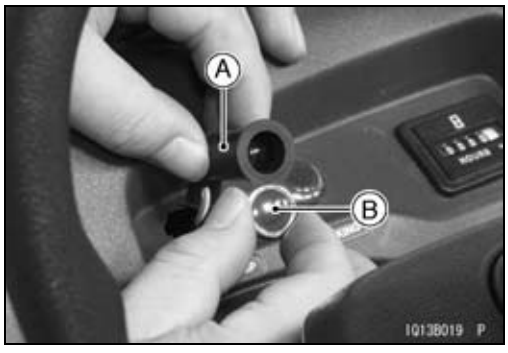

- Roll the rubber [A] up and pull the bulb [B] out of the socket.

NOTICE
Do not turn the bulb. Pull the bulb out to prevent damage to the bulb. **Do not use bulb rated for greater wattage than the specified value.**

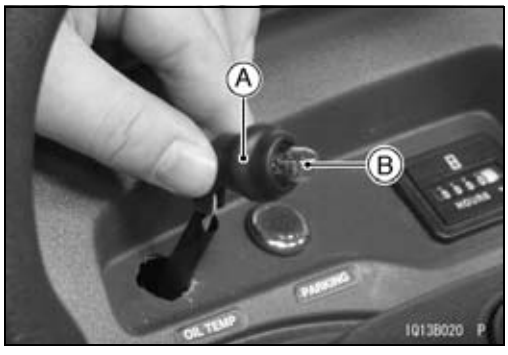

- Install:
  Bulb
  Lens [A]
  Light Assembly [B]

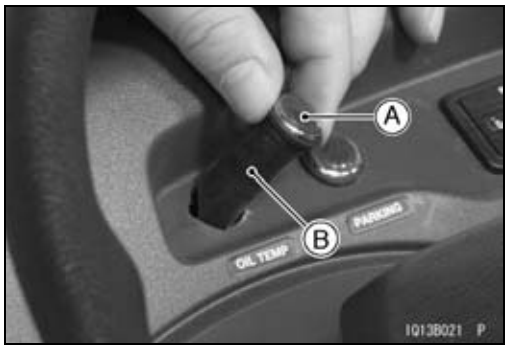

Lighting System

Lighting System Circuit

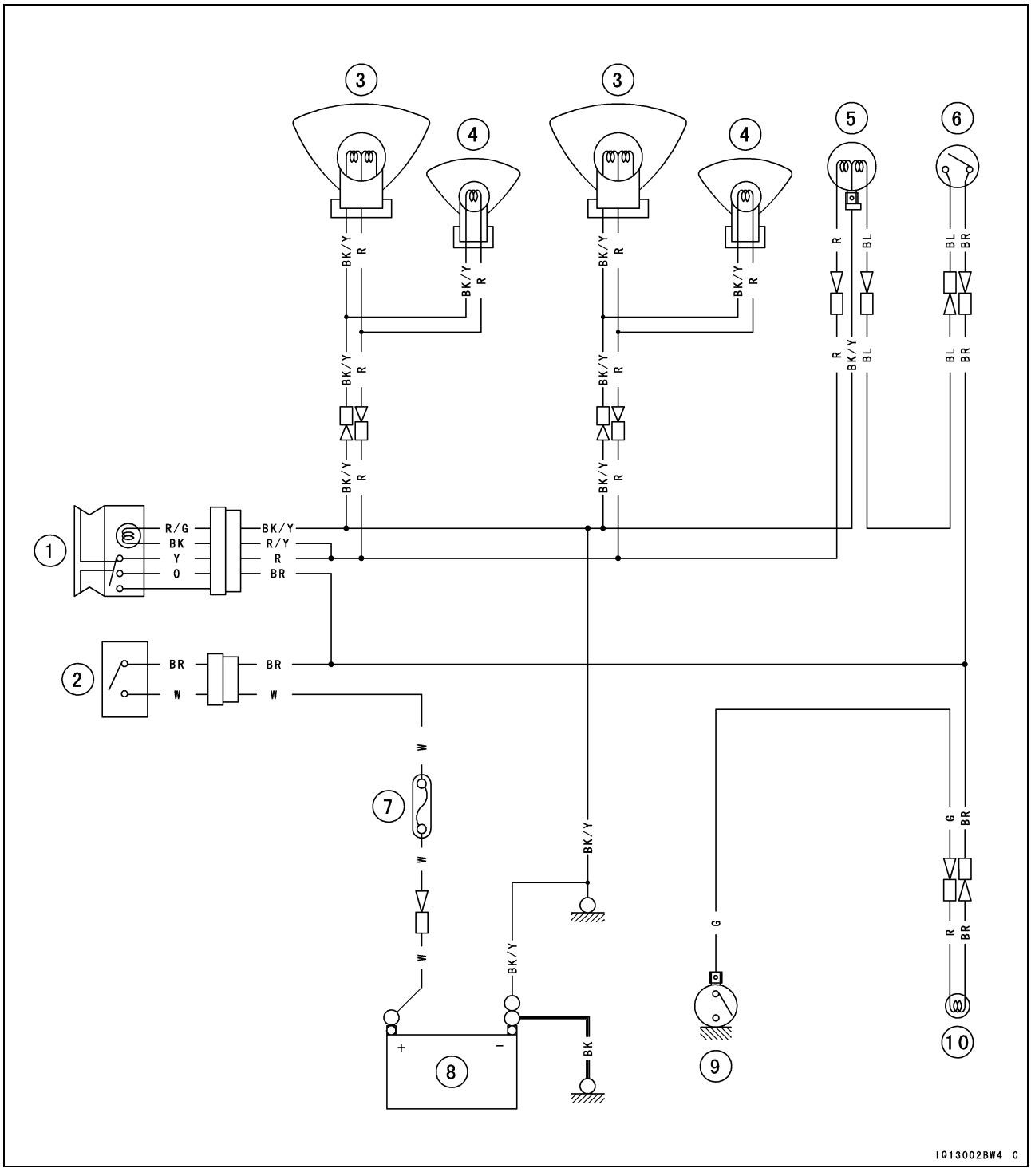

1. Light Switch
2. Ignition Switch
3. Headlights
4. Position Lights
5. Brake/Tail Lights
6. Brake Switch
7. 30 A Fuse
8. Battery
9. Parking Brake Light Switch
10. Parking Brake Light

Switches

Brake Light Switch Inspection

- Refer to Brake Light Switch Inspection in the Periodic Maintenance chapter.

Oil Temperature Sensor Inspection (KAF400-A/C)

- Remove:
  Oil Temperature Sensor [A] (see Engine Lubrication System chapter)
- Suspend the sensor in a container of engine oil so that the heat-sensitive portion and threaded portion are submerged.
- Suspend an accurate thermometer [B] with heat-sensitive portions [C] located in almost the same depth.

NOTE

○*The sensor and thermometer must not touch the container side or bottom.*

- Place the container over a source of heat and gradually raise the temperature of the oil while stirring the oil gently for even temperature.
- Using a digital meter, measure the internal resistance of the sensor across the terminals at the temperatures shown in the table.

★If the digital meter does not show the specified values, replace the sensor.

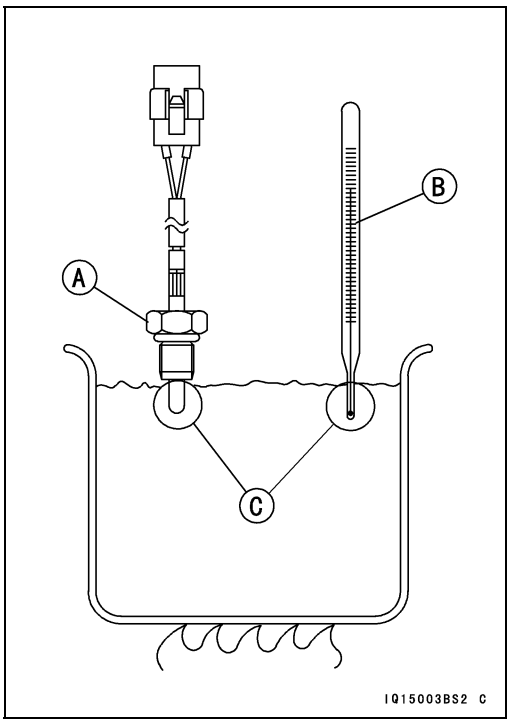

Oil Temperature Sensor Resistance

Temperature	Resistance (kΩ)
50°C (122°F)	64.07 ~ 92.93
100°C (212°F)	11.29 ~ 15.03
150°C (302°F)	2.68 ~ 3.84
200°C (392°F)	0.87 ~ 1.28

Oil Temperature Warning Indicator Control Unit Inspection (KAF400-A/C)

- Remove:
  Left Side Cover (see Frame chapter)
  Oil Temperature Warning Indicator Control Unit [A]

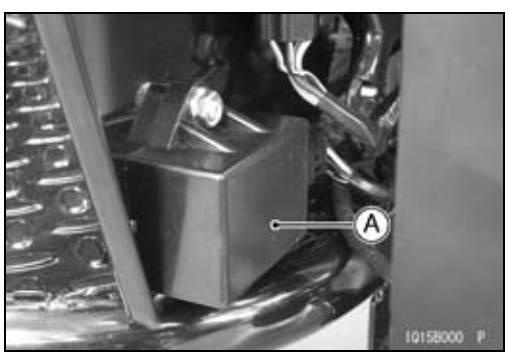

- Set the hand tester to ×1 kΩ range and make sure the measurements shown in the table.

  Special Tool - Hand Tester: 57001-1394

★If the tester readings are not as specified, replace the control unit.

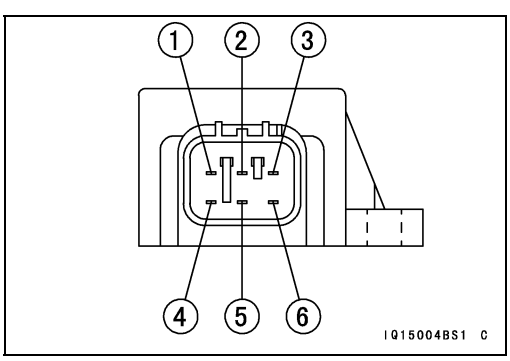

NOTICE
Use only Tester 57001-1394 with new battery at room temperature for this test. A tester other than the Kawasaki Hand Tester may show different readings. **If a meter with a large-capacity battery is used, the control unit will be damaged.**

Switches

Internal Resistance

Unit: kΩ

		Tester (+) Lead Connection					
	Terminal	1	2	3	4	5	6
(–)	1	–	32.5 ~ 97.5	28.0 ~ 84.0	17.0 ~ 51.0	32.5 ~ 97.5	∞
	2	∞	–	25.0 ~ 75.0	∞	17.0 ~ 51.0	∞
	3	∞	27.5 ~ 82.5	–	∞	27.5 ~ 82.5	∞
	4	∞	32.5 ~ 97.5	28.0 ~ 84.0	–	32.5 ~ 97.5	∞
	5	∞	17.0 ~ 51.0	25.0 ~ 75.0	∞	–	∞
	6	∞	∞	∞	∞	∞	–

(–): Tester (–) Lead Connection

Oil Temperature Warning Control System Circuit

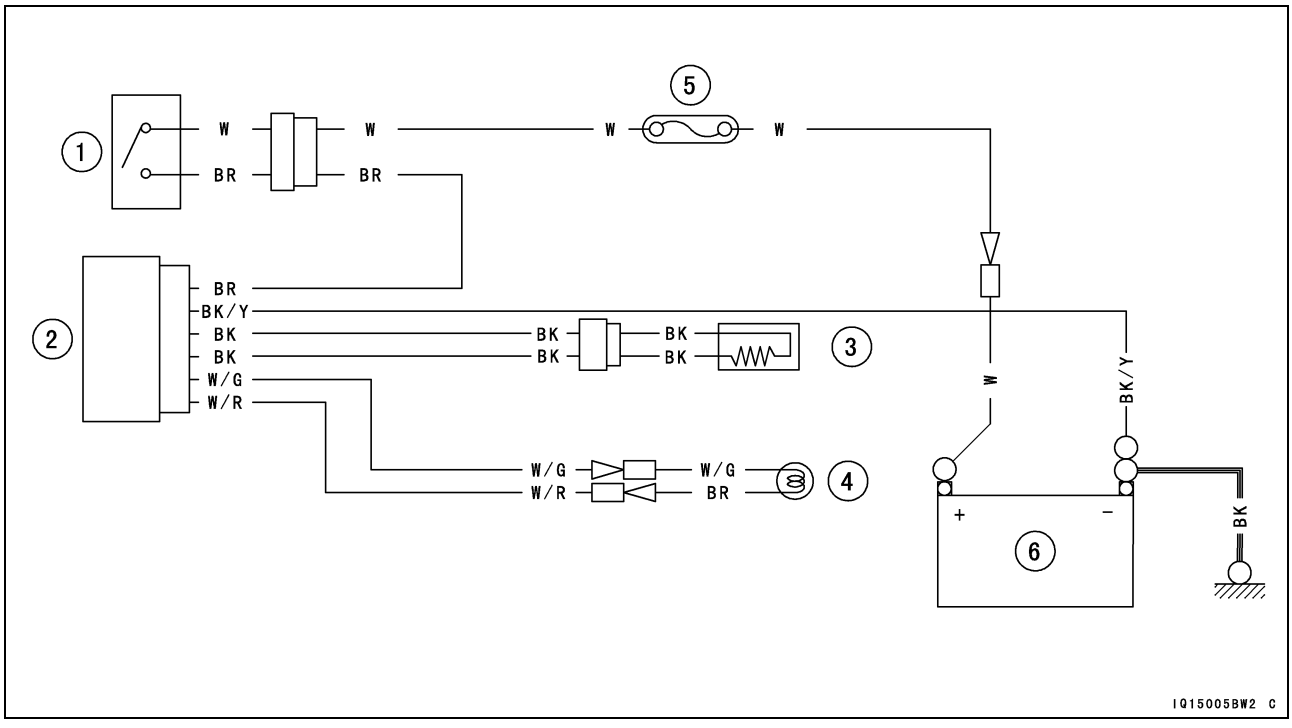

1. Ignition Switch
2. Oil Temperature Warning Indicator Control Unit
3. Oil Temperature Sensor
4. Oil Temperature Warning Indicator Light
5. 30 A Fuse
6. Battery

Switches

Switch Inspection

- ● Using a hand tester, check to see that only the connections shown in the table have continuity (about zero ohms).
- ○For the ignition switch, light switch, brake light switch, and parking brake light switch, refer to tables in the Wiring Diagram.
- ★If the switch has an open or short, repair it or replace it with a new one.

Neutral Switch Connections

Neutral Switch Connections		
Color	SW. Terminal	Ground
When transmission is in neutral	○	○
When transmission is not in neutral		

Reverse Light Switch Connections (EUR Model)

Reverse Light Switch Connections		
Color	SW. Terminal	Ground
When transmission is in reverse	○	○
When transmission is not in reverse		

Horn Switch Connections (EUR Model)

Horn Button Connections		
Color	BK/W	Ground
Push	○	○
Released		

Fuses

Fuse Removal

- Remove:
  30 A Fuse Case [A]
  10 A Fuse Case [B]
- Open the fuse case and remove the fuse.

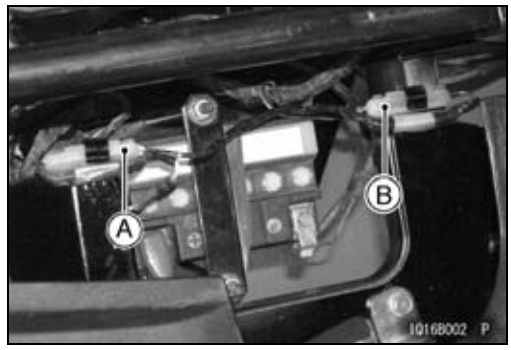

Fuse Installation

★If a fuse fails during operation, inspect the electrical system to determine the cause, and then replace it with a new fuse of proper amperage.
  10 A Fuse Case [A]
  Brown Lead [B]
  30 A Fuse Case [C]
  White Lead [D]

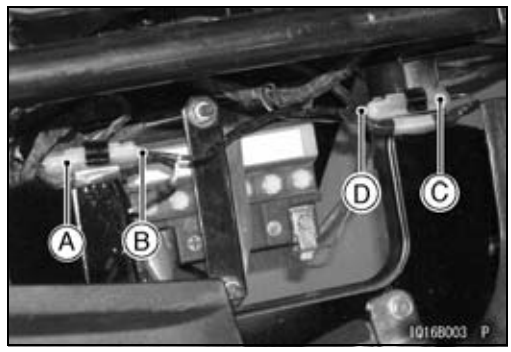

Fuse Inspection

- Remove the fuse.
- Inspect the fuse element [A].

★If it is blown out, replace the fuse. Before replacing a blown fuse [B], always check the amperage in the affected circuit. If the amperage is equal to or greater than the fuse rating, check the wiring and related components for a short circuit.

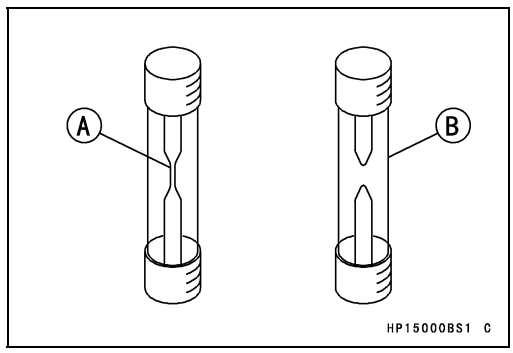

NOTICE
When replacing a fuse, be sure the new fuse matches the specified fuse rating for that circuit. Installation of a fuse with a higher rating may cause damage to wiring and components.

Appendix

Table of Contents

Troubleshooting Guide 17-2
Cable, Wire, and Hose Routing 17-6

Troubleshooting Guide

NOTE

○*This is not an exhaustive list, giving every possible cause for each problem listed. It is meant simply as a rough guide to assist the troubleshooting for some of the more common difficulties.*

Engine Doesn't Start, Starting Difficulty:

Starter motor not rotating:
- Neutral switch trouble
- Starter motor trouble
- Battery voltage low
- Relays not contacting or operating
- Wiring open or shorted
- Ignition switch trouble
- Fuse blown

Starter motor rotating but engine doesn't turn over:
- Starter motor trouble
- Pinion or ring gear worn

Engine won't turn over:
- Valve seizure
- Rocker arm seizure
- Cylinder, piston seizure
- Crankshaft seizure
- Connecting rod small end seizure
- Connecting rod big end seizure
- Camshaft seizure

No fuel flow:
- Fuel tank air vent obstructed
- Fuel pump trouble
- Fuel filter clogged
- Fuel line clogged
- Float valve clogged

Engine flooded:
- Fuel level too high
- Float valve worn or stuck open
- Starting technique faulty
- (When flooded, crank the engine with the throttle fully opened to allow more air to reach the engine.)

No spark; spark weak:
- Spark plug dirty, broken, or maladjusted
- Spark plug cap or high tension wiring trouble
- Spark plug cap not in good contact
- Spark plug incorrect
- Ignition coil trouble
- Ignition switch shorted
- Wiring shorted or open
- Fuse blown

Compression Low:
- Spark plug loose
- Cylinder head not sufficiently tightened down
- No valve clearance
- Cylinder, piston worn
- Piston ring bad (worn, weak, broken, or sticking)
- Piston ring/groove clearance excessive
- Cylinder head gasket damaged
- Cylinder head warped
- Valve spring broken or weak
- Valve not seating properly (valve bent, worn, or carbon accumulation on the seating surface)

Poor Running at Low Speed:

Spark weak:
- Spark plug dirty, broken, or maladjusted
- Spark plug cap or high tension wiring trouble
- Spark plug cap shorted or not in good contact
- Spark plug incorrect
- Ignition coil trouble

Fuel/air mixture incorrect:
- Air cleaner clogged, poorly sealed, or missing
- Choke valve stuck closed
- Fuel level too high or too low
- Fuel tank air vent obstructed
- Fuel pump trouble
- Governor link mechanism malfunctioning

Compression low:
- Spark plug loose
- Cylinder head not sufficiently tightened down
- No valve clearance
- Cylinder, piston worn
- Piston ring bad (worn, weak, broken, or sticking)
- Piston ring/groove clearance excessive
- Cylinder head warped
- Cylinder head gasket damaged
- Valve spring broken or weak
- Valve not seating properly (valve bent, worn, or carbon accumulation on the seating surface)

Other:
- Engine oil viscosity too high
- Front final gear case oil viscosity to high (KAF400-A/C)
- Drive train trouble
- Brake dragging

Poor Running or No Power at High Speed:

Firing incorrect:
- Spark plug dirty, broken, or maladjusted
- Spark plug cap shorted or not in good contact
- Spark plug incorrect
- Ignition coil trouble

Fuel/air mixture incorrect:
- Choke valve stuck close
- Main jet clogged or wrong size

Troubleshooting Guide

Fuel level too high or too low
Air cleaner clogged, poorly sealed, or missing
Water or foreign matter in fuel
Fuel tank air vent obstructed
Fuel line clogged
Fuel pump trouble
Governor link mechanism malfunctioning

Compression low:
Spark plug loose
Cylinder head not sufficiently tightened down
No valve clearance
Cylinder, piston worn
Piston ring bad (worn, weak, broken, or sticking)
Piston ring/groove clearance excessive
Cylinder head gasket damaged
Cylinder head warped
Valve spring broken or weak
Valve not seating properly (valve bent, worn, or carbon accumulation on the seating surface.)

Knocking:
Carbon built up in combustion chamber
Fuel poor quality or incorrect
Spark plug incorrect

Miscellaneous:
Throttle valve won't fully open
Brake dragging
Overheating
Engine oil level too high
Engine oil viscosity too high
Front final gear case oil viscosity too high (KAF400-A/C)
Drive train trouble

Overheating:

Firing incorrect:
Spark plug dirty, broken, or maladjusted
Spark plug incorrect

Fuel/air mixture incorrect:
Main jet clogged or wrong size
Fuel level too low
Air cleaner clogged, poorly sealed, or missing

Compression high:
Carbon built up in combustion chamber

Engine load faulty:
Engine oil level too high
Engine oil viscosity too high
Drive train trouble
Brake dragging

Converter and/or belt excessive heating:
Belt dirty or worn
Drive or driven pulley sheave dirty or worn
Driven pulley spring broken or weak
Drive pulley spring broken or weak
Idle speed too high
Converter fan damaged

Lubrication inadequate:
Engine oil level too low
Engine oil poor quality or incorrect

Front final gear case overheating (KAF400-A/C):
Insufficient oil
Bevel gears maladjusted
LSD clutch maladjusted

Cooling system component incorrect:
Fan blade damaged
Screen air passages clogged

Converter Operation Faulty:

Belt slipping:
Belt dirty or worn
Drive or driven pulley sheave dirty or worn
Drive pulley spring broken or weak

Converter engagement speed too low:
Drive pulley spring broken or weak

Converter engagement speed too high:
Belt dirty or worn
Drive or driven pulley sheave dirty or worn
Drive pulley weight doesn't move smoothly
Drive pulley movable sheave doesn't move smoothly
Drive or driven pulley movable sheave bush worn
Drive pulley weight or roller worn

Shifting too quickly:
Drive pulley spring weak
Driven pulley spring weak or incorrectly installed (too loose)

Shifting too slowly:
Belt dirty or worn
Drive or driven pulley sheave dirty or worn
Drive pulley weight doesn't move smoothly
Drive pulley movable sheave doesn't move smoothly
Driven pulley spring incorrect installed (too tight)
Driven pulley movable sheave doesn't move smoothly

Gear Shifting Faulty:

Doesn't go into gear:
Shift arm bent or seized
Gear stuck on the shaft
Shift cable maladjusted
Shift cable lubrication inadequate
Shift cable damaged

Jumps out of gear:
Shifter groove worn
Gear dogs worn
Shift arm positioning bolt spring weak or broken
Shift block worn

Transmission shaft, and/or gear splines worn
Shift cable maladjusted

Overshifts:
Shift arm positioning bolt spring weak or broken
Shift cable maladjusted

Abnormal Engine Noise:

Knocking:
Carbon built up in combustion chamber
Fuel poor quality or incorrect
Spark plug incorrect
Overheating

Piston slap:
Cylinder/piston clearance excessive
Cylinder, piston worn
Connecting rod bent
Piston pin, piston pin holes worn

Valve noise:
Valve clearance incorrect
Valve spring broken or weak
Camshaft bearing worn
Rocker arm push rod runout excessive

Other noise:
Connecting rod small end clearance excessive
Connecting rod big end clearance excessive
Piston ring worn, broken or stuck
Piston seizure or damaged
Cylinder head gasket leaking
Exhaust pipe leaking at cylinder head connection
Crankshaft runout excessive
Engine mounts loose
Crankshaft bearing worn
Loose alternator rotor

Abnormal Drive Train Noise:

Converter noise:
Belt worn
Drive or driven pulley sheave worn
Drive or driven pulley movable sheave bush worn
Drive or driven pulley mount loose
Driven pulley shoe worn
Drive pulley weight or roller side washer worn
Drive pulley weight or roller worn

Transmission noise:
Bearing worn
Transmission gears worn or chipped
Metal chips jammed in gear teeth
Transmission oil insufficient

Final drive noise:
Bearing worn
Gears worn or chipped
Metal chips jammed in gear teeth
Insufficient lubricant
Bevel gears maladjusted (KAF400-A/C)
Worn LSD clutch friction plate (KAF400-A/C)
Worn LSD clutch spring (KAF400-A/C)
Universal joint damaged

Abnormal Frame Noise:

Shock absorber noise:
Shock absorber damaged

Brake noise:
Brake linings overworn or worn unevenly
Drum worn unevenly or scored
Brake spring(s) weak or broken
Foreign matter in hub
Brake not properly adjusted

Other noise:
Bracket, nuts, bolts, etc. not properly mounted or tightened

Exhaust Smokes Excessively:

White smoke:
Piston oil ring worn
Cylinder worn
Valve oil seal damaged
Valve guide worn
Engine oil level to high

Black smoke:
Air cleaner clogged
Main jet too large or fallen off
Choke valve stuck closed
Fuel level too high

Brown smoke:
Main jet too small
Fuel level too low
Air cleaner poorly sealed or missing

Handling and/or Stability Unsatisfactory:

Steering wheel hard to turn:
Steering shaft bearing damaged
Steering shaft lubrication inadequate
Steering shaft bent
Steering gear assembly damaged
Tire air pressure too low
LSD clutch maladjusted (KAF400-A/C)

Noise when turning (KAF400-A/C):
Damaged side gear or pinion (front final gear case)
Worn clutch friction plates (Front final gear case)
Worn clutch spring (Front final gear case)

Steering wheel shakes or excessively vibrates:
Tire(s) worn
Suspension arm bushing worn
Tie-rod joint worn
Wheel rim warped
Axle shaft bearing worn
Steering wheel mount loose
Steering bolt or nut loose

Troubleshooting Guide

Steering wheel pulls to one side:
- Frame bent
- Wheel misalignment
- Suspension arm bent or twisted
- Steering shaft bent
- Steering gear assembly damaged
- Front or rear tire air pressure unbalanced
- Shock absorber unbalanced

Shock absorption unsatisfactory:
- (Too hard)
- Tire air pressure too high
- Shock absorber damaged
- (Too soft)
- Shock absorber oil leaking
- Shock absorber spring weak
- Tire air pressure too low

Brake Doesn't Hold
- Air in the brake line
- Brake fluid leak
- Brake fluid deteriorated
- Primary or secondary cup trouble
- Master or wheel cylinder scratched inside
- Brake not properly adjusted
- Lining overworn or worn unevenly
- Drum worn unevenly or scored
- Oil, grease on lining and drum
- Dirt, water between lining and drum
- Overheated brakes

Battery Discharged:
- Battery faulty (e.g., plates sulphated, shorted through sedimentation, electrolyte level too low)
- Battery leads making poor contact
- Load excessive (e.g., bulb of excessive wattage)
- Ignition switch trouble
- Regulator/Rectifier trouble
- Alternator trouble
- Wiring faulty

Battery Overcharged:
- Regulator/Rectifier trouble
- Battery trouble

Cable, Wire, and Hose Routing

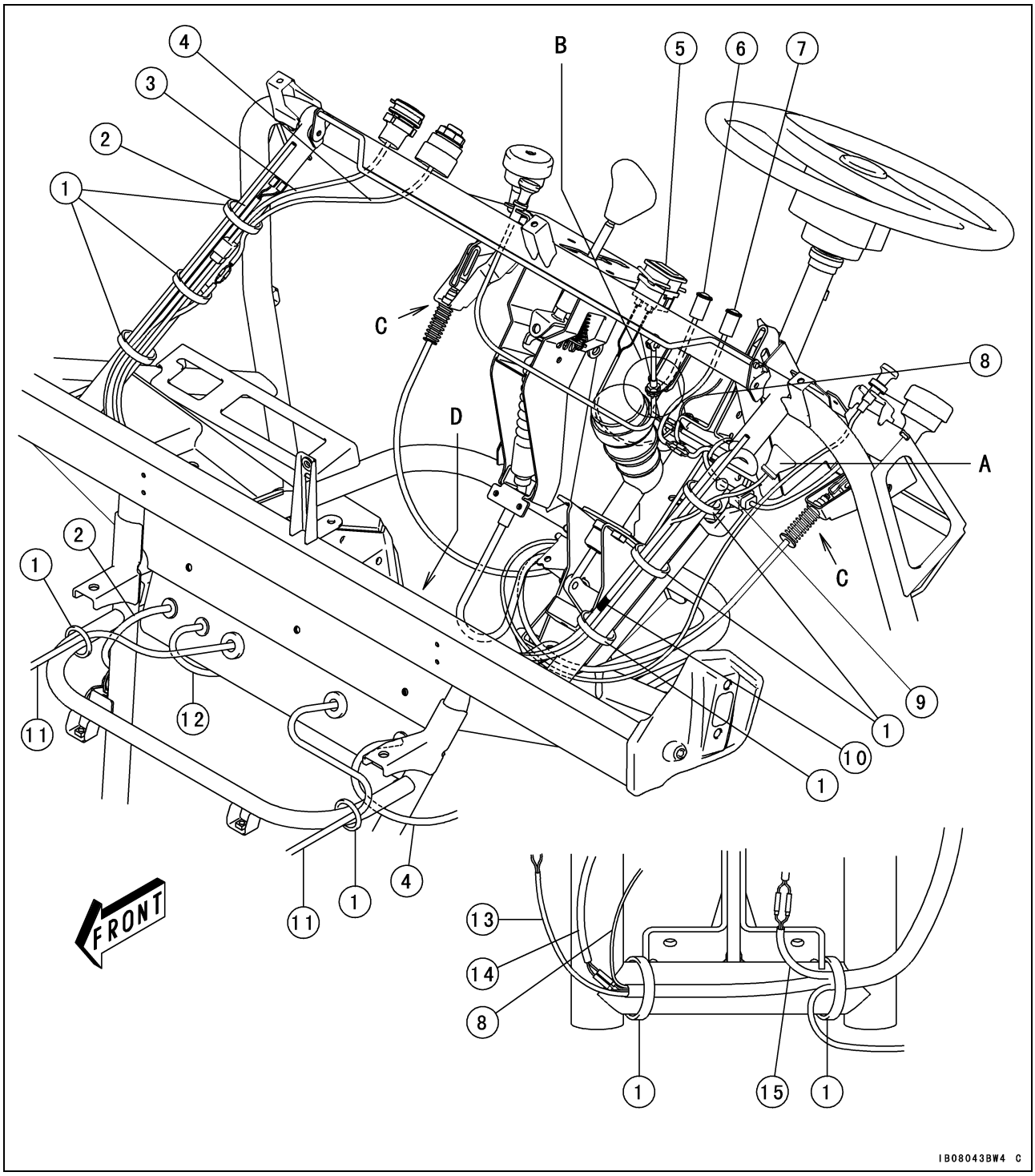

1. Band
2. Brake Panel Breather Hose
3. Accessory Connector (Power Outlet) Lead
4. Ignition Switch Lead
5. Hour Meter
6. Parking Brake Indicator Light Lead
7. Oil Temperature Warning Indicator Light Lead (KAF400-A/C)
8. Horn Switch Lead (EUR Model)
9. Light Switch Lead
10. Green Tape (Left Side)
11. Head Light Lead
12. Front Final Gear Case Breather Hose (KAF400-A/C)
13. Hour Meter Lead
14. Parking Brake Indicator Light Lead
15. Oil Temperature Warning Indicator Light Lead (KAF400-A/C)

Cable, Wire, and Hose Routing

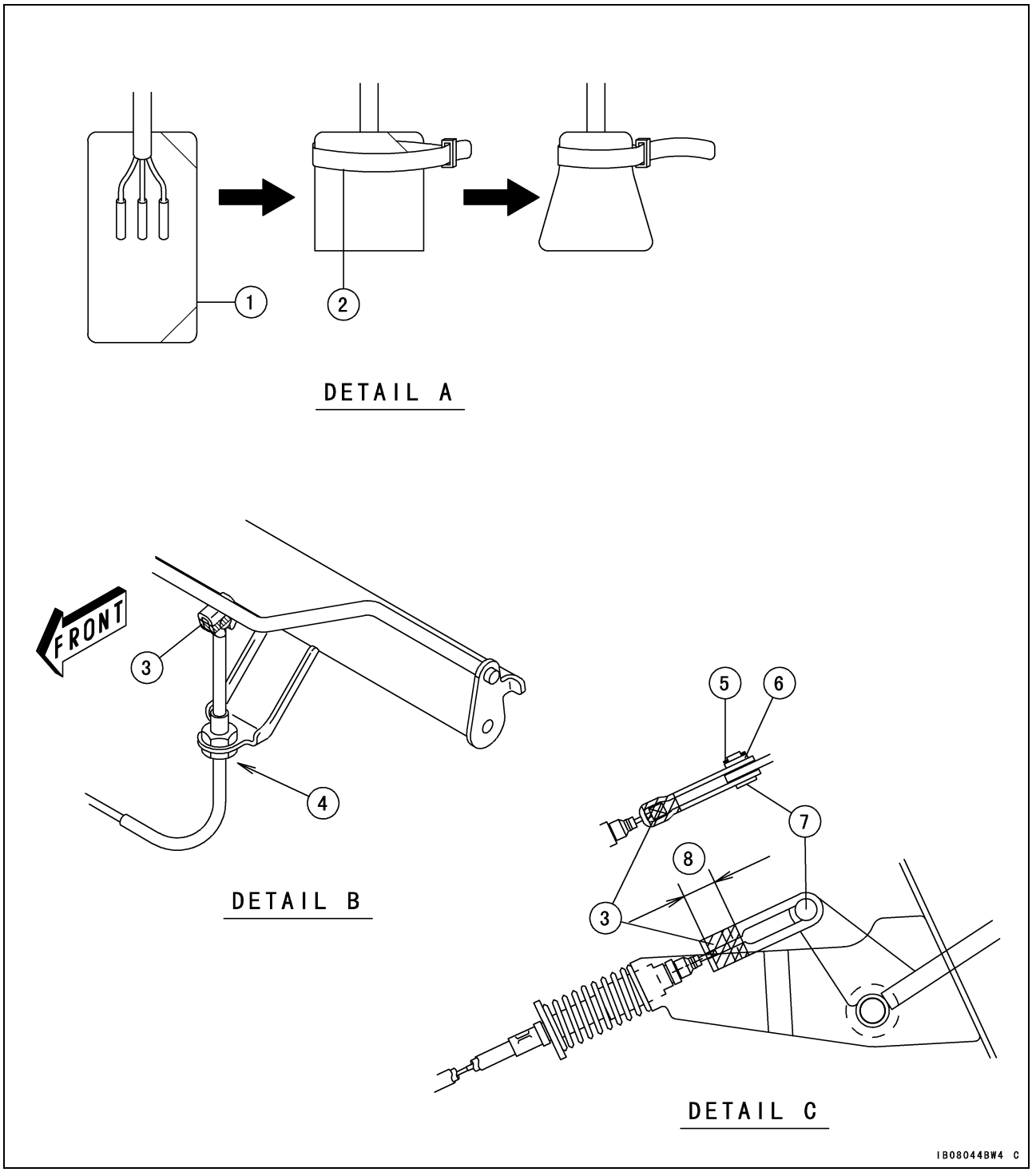

1. Connector Cover
2. Band
3. Taping (All Around)
4. “0” Gap
5. Snap Pin
6. Washer
7. Pin
8. 8 ~ 14 mm (0.32 ~ 0.55 in.)

Cable, Wire, and Hose Routing

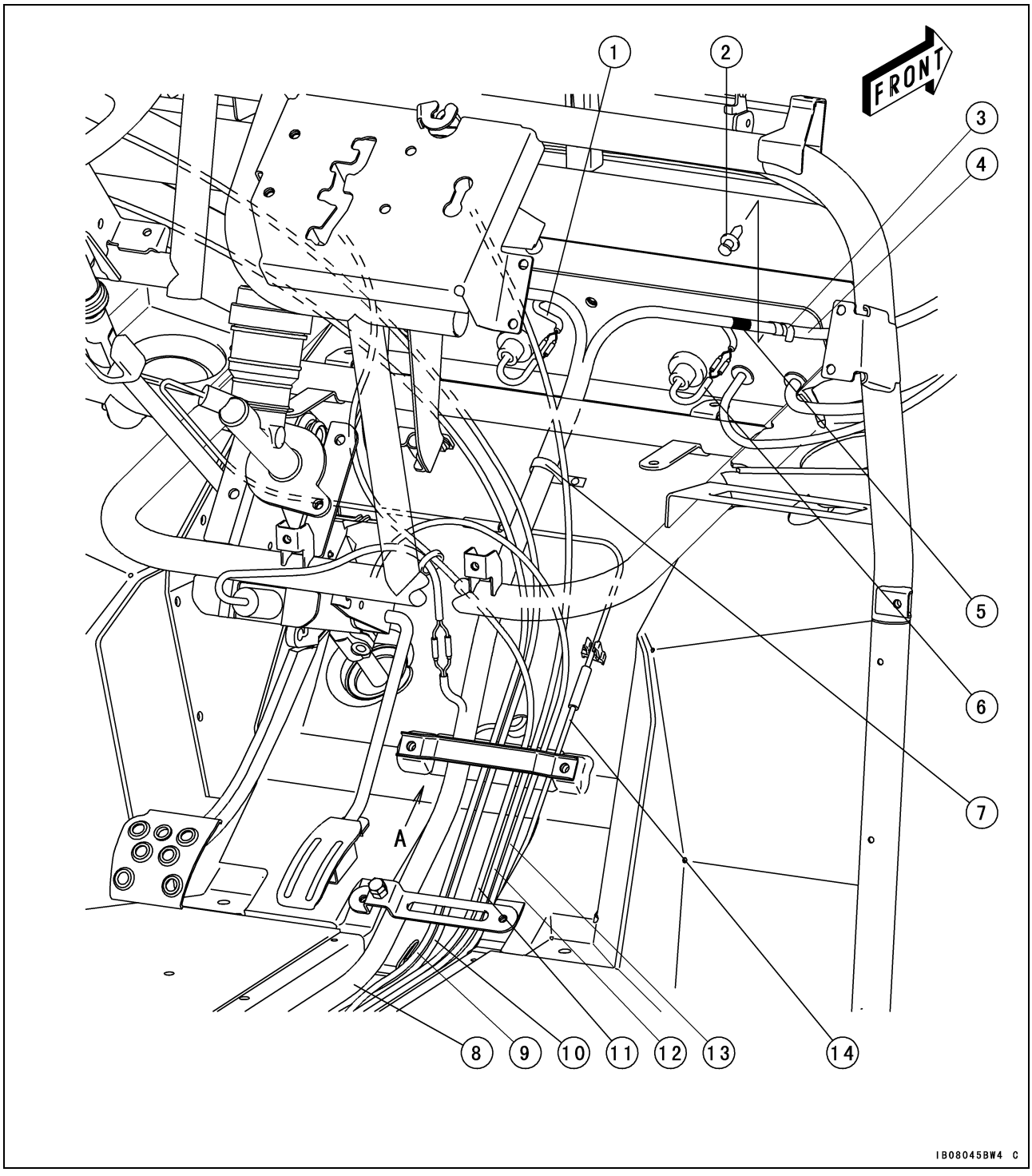

1. Headlight Lead
2. Quick Rivet
3. Clamp
4. Harness
5. Red Tape (Right Side)
6. Headlight Lead
7. Clamp
8. Main Harness
9. Differential Lock Shift Cable
10. Choke Cable
11. Transmission Shift Cable
12. 2WD/4WD Shift Cable (KAF400-A/C)
13. Throttle Cable
14. Brake Pipe

Cable, Wire, and Hose Routing

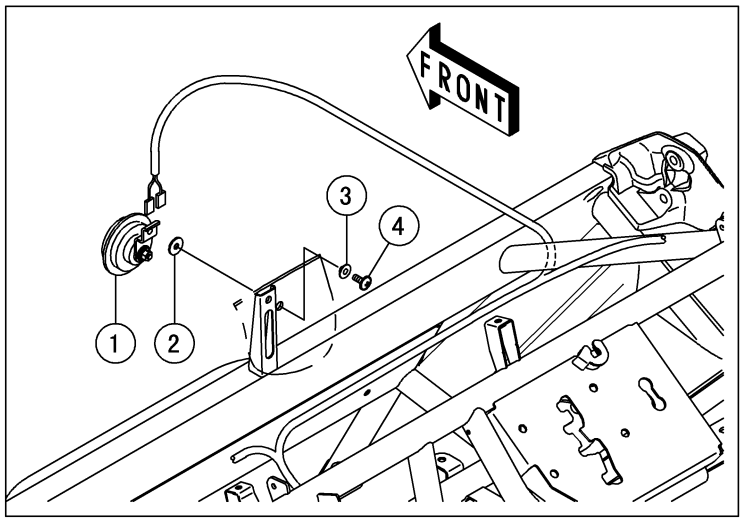

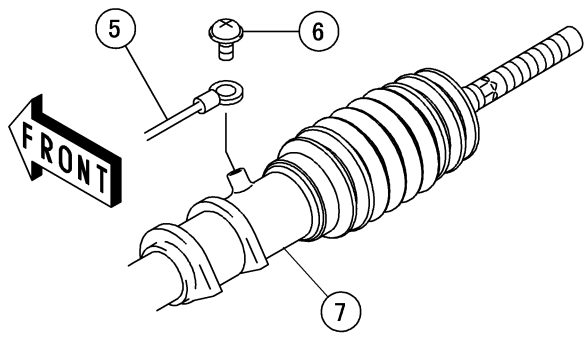

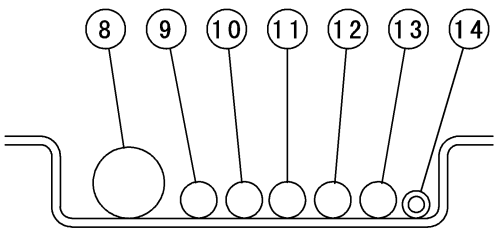

VIEW A

IB08046BW4 C

1. Horn (EUR Model)
2. Washer
3. Collar
4. Screw
5. Horn Lead (EUR Model)
6. Screw
7. Steering Gear Assembly
8. Main Harness
9. Differential Lock Shift Cable
10. Choke Cable
11. Transmission Shift Cable
12. 2WD/4WD Shift Cable (KAF400-A/C)
13. Throttle Cable
14. Brake Pipe

Cable, Wire, and Hose Routing

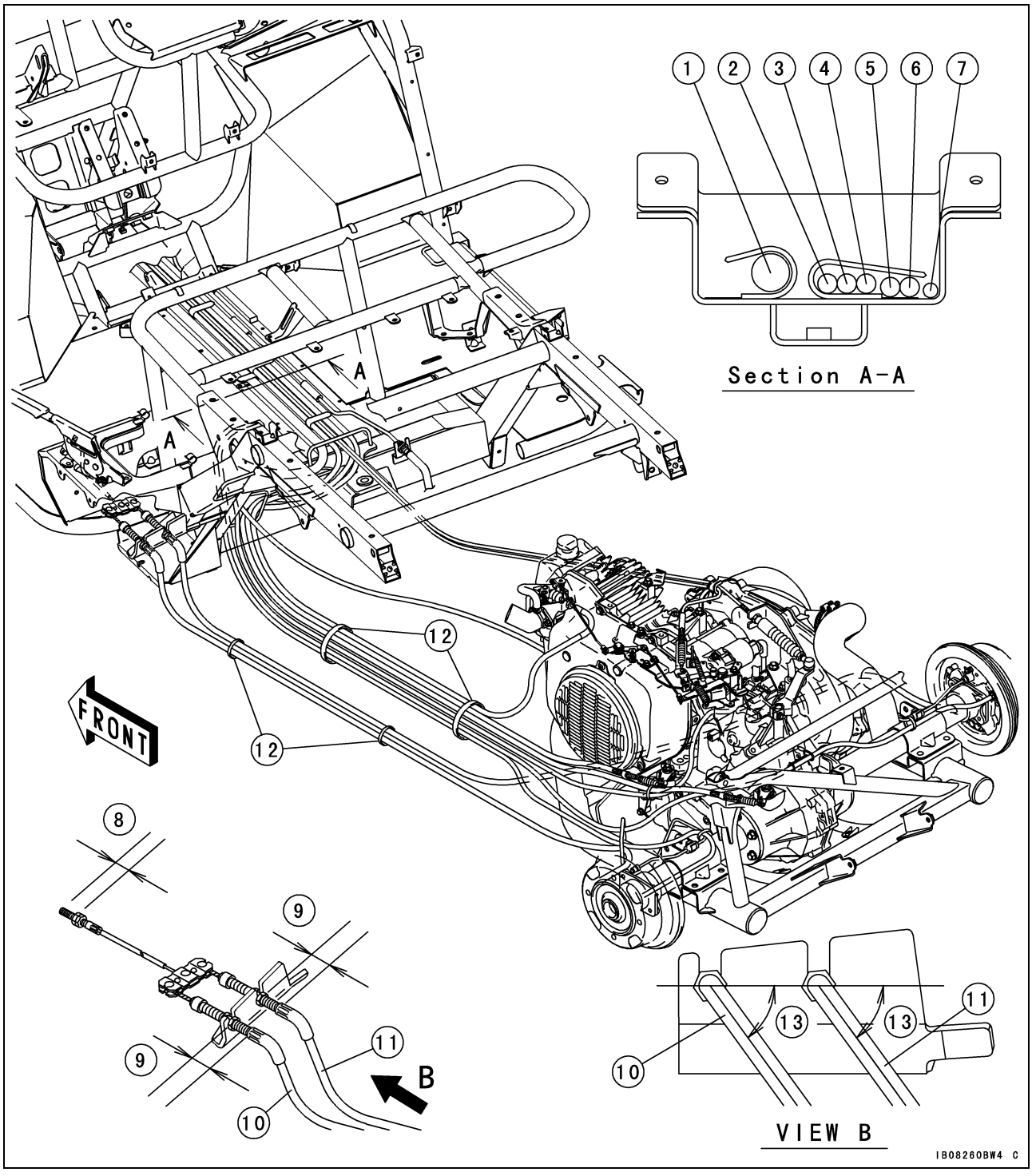

1. Main Harness
2. Differential Lock Shift Cable
3. Choke Cable
4. Transmission Shift Cable
5. 2WD/4WD Shift Cable (KAF400-A/C)
6. Throttle Cable
7. Brake Pipe
8. 14 mm (0.55 in.)
9. 20 mm (0.79 in.)
10. Rear Left Brake Cable
11. Rear Right Brake Cable
12. Bands
13. 45°

Cable, Wire, and Hose Routing

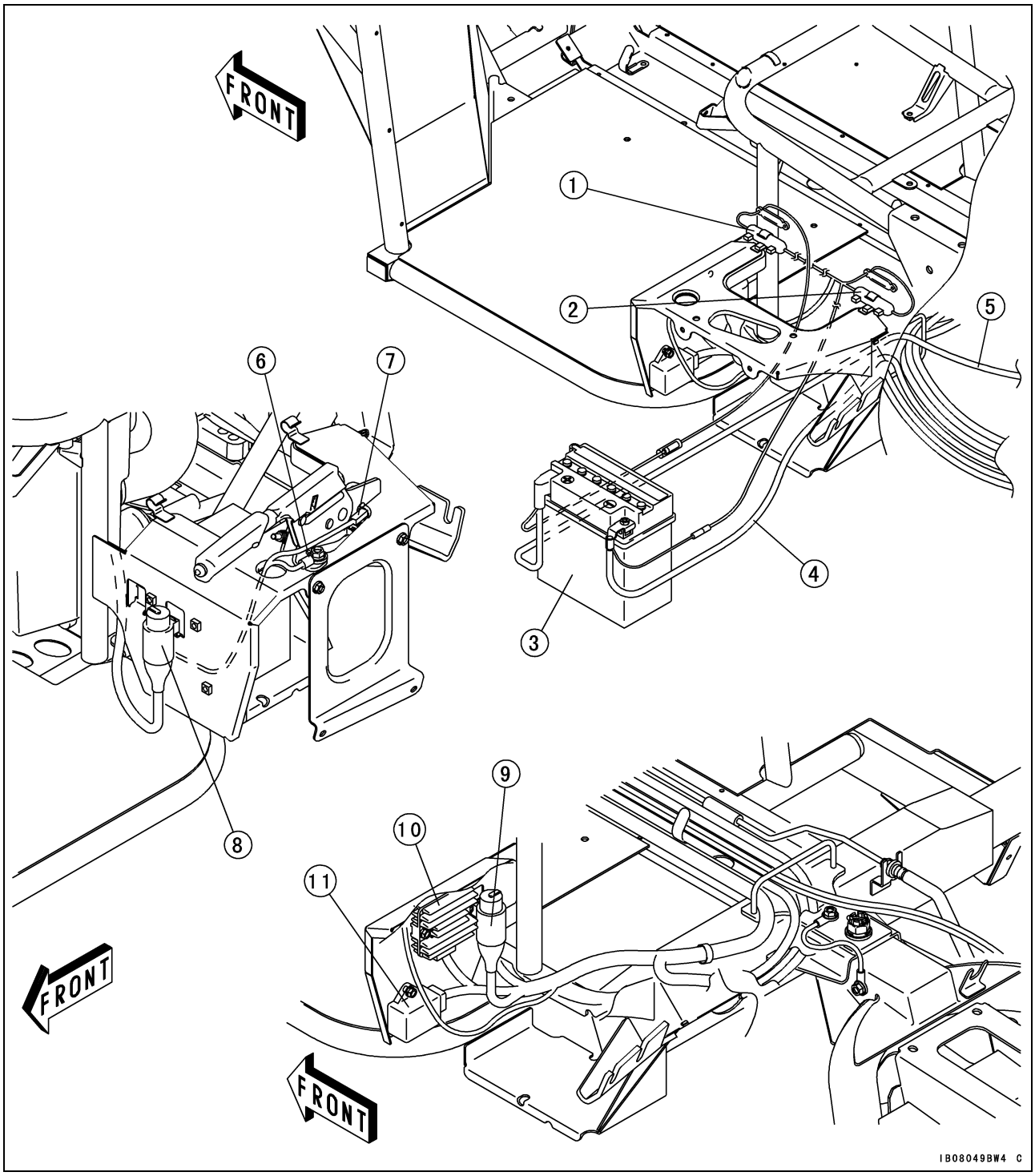

1. Accessory Fuse 10 A
2. Fuse 30 A
3. Battery
4. Engine Ground Cable
5. Starter Motor Cable
6. Frame Ground Lead
7. Parking Brake Light Switch
8. Starter Circuit Relay (Brake)
9. Starter Circuit Relay (Neutral)
10. Regulator/rectifier
11. Oil Temperature Warning Indicator Control Unit (KAF400-A/C)

Cable, Wire, and Hose Routing

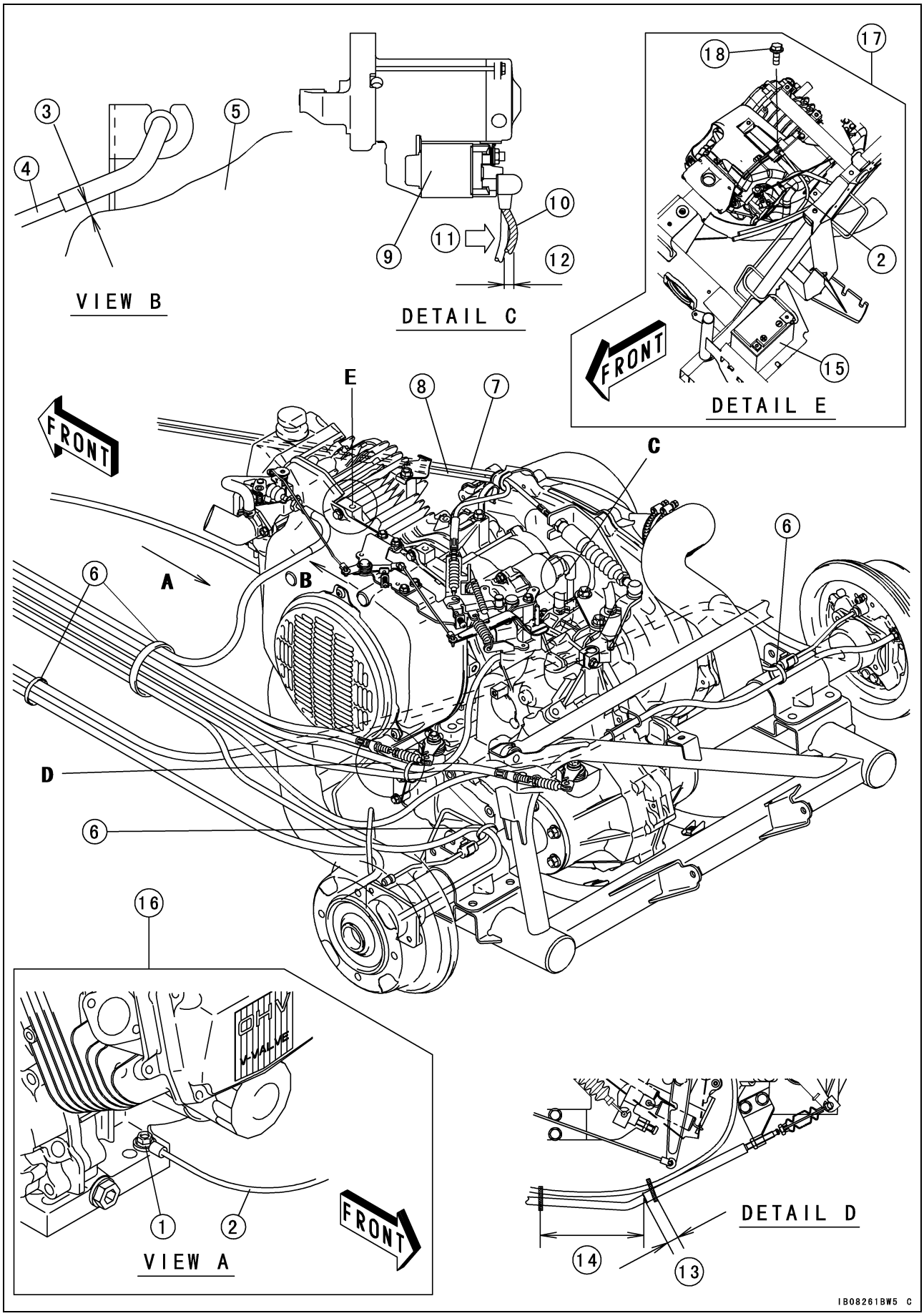

Cable, Wire, and Hose Routing

1. Engine Mounting Bolt
2. Engine Ground Lead
3. 0 ~ 2 mm (0 ~ 0.08 in.)
4. Choke Cable
5. Cooling Fan Cover
6. Bands
7. Transmission Shift Cable
8. Throttle Cable
9. Starter Motor
10. (+) Cable
11. Push the cable and change the route.
12. 10 mm (0.39 in.)
13. 20 ±10 mm (0.79 ±0.39 in.)
14. 100 ±10 mm (3.9 ±0.39 in.)
15. Battery
16. KAF400-A1 ~ AA/B1 ~ BA/C1 ~ CA
17. KAF400AB ~/BB ~
18. Engine Ground Lead Bolt

Cable, Wire, and Hose Routing

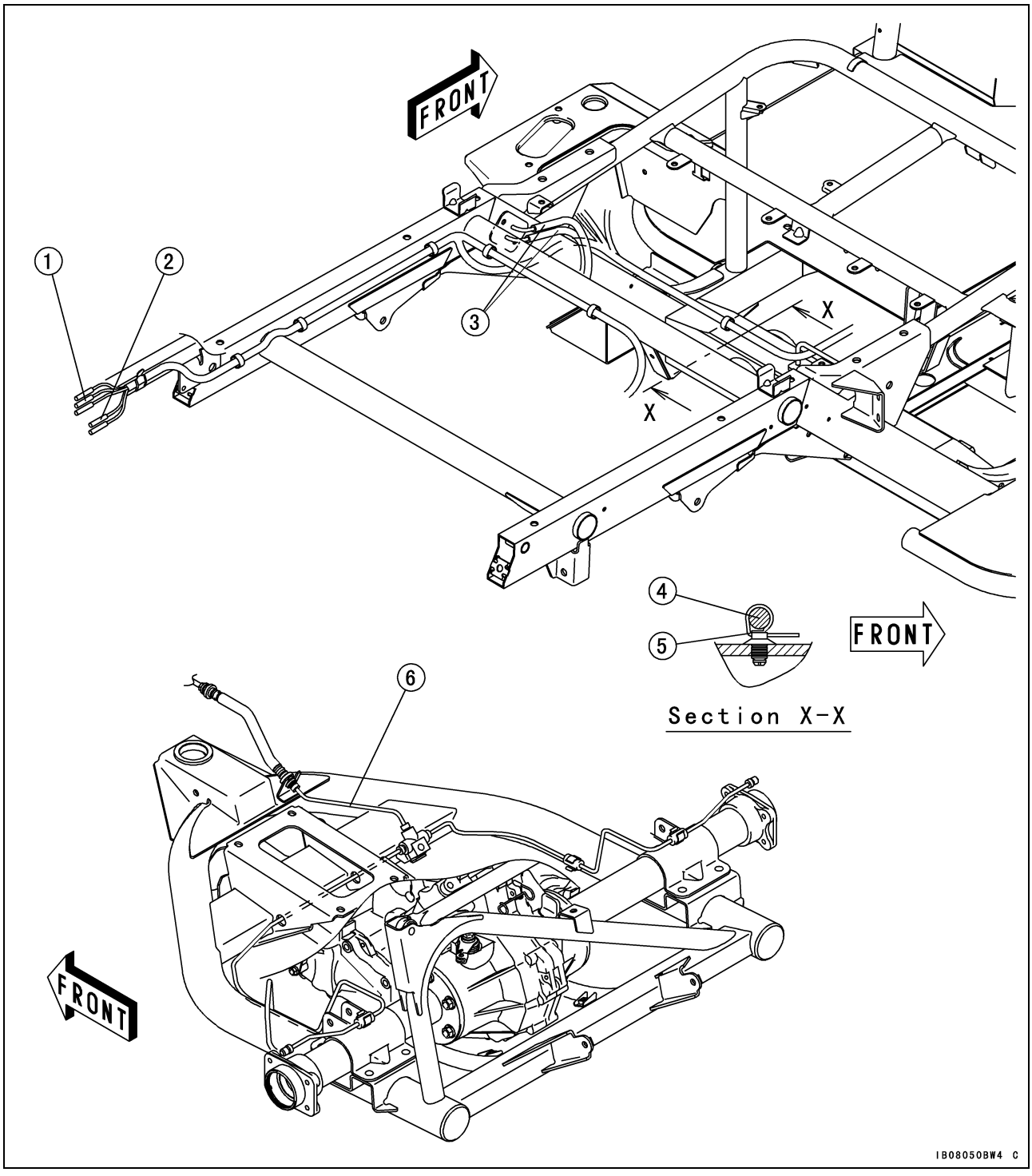

1. Tail/brake Light Leads
2. Reverse Light Leads (EUR Model)
3. Rear Brake Panel Breather Hose
4. Main Harness
5. Clamp
6. Brake Pipe

Cable, Wire, and Hose Routing

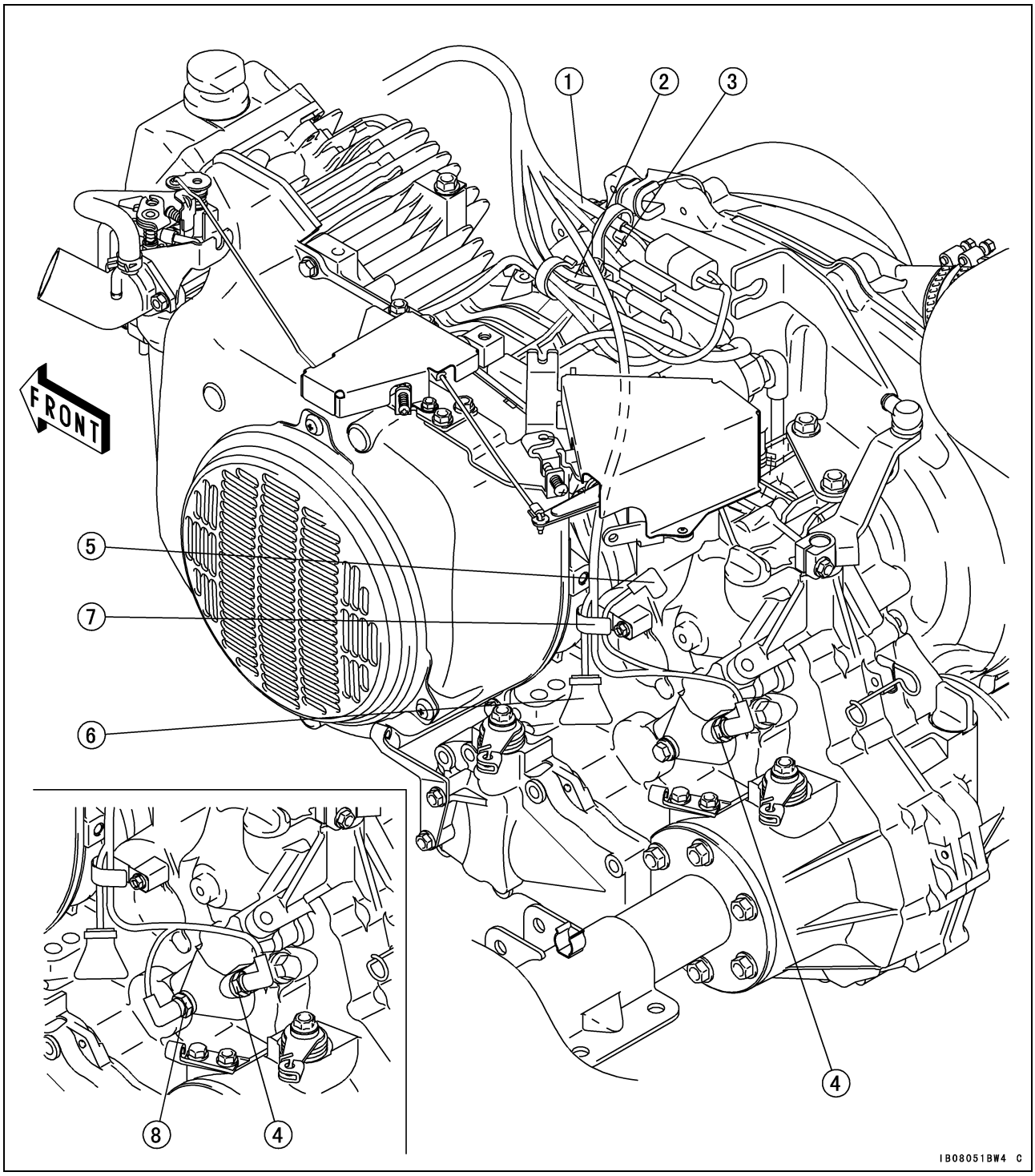

1. Alternator Lead
2. Ignition Coil Lead
3. Oil Temperature Warning Indicator Control Unit Lead (KAF400-A/C)
4. Neutral Switch
5. Reverse Switch Lead Connector (for option)
6. Speed Sensor Lead (for option)
7. Clamp
8. Reverse Switch (EUR Model)

Cable, Wire, and Hose Routing

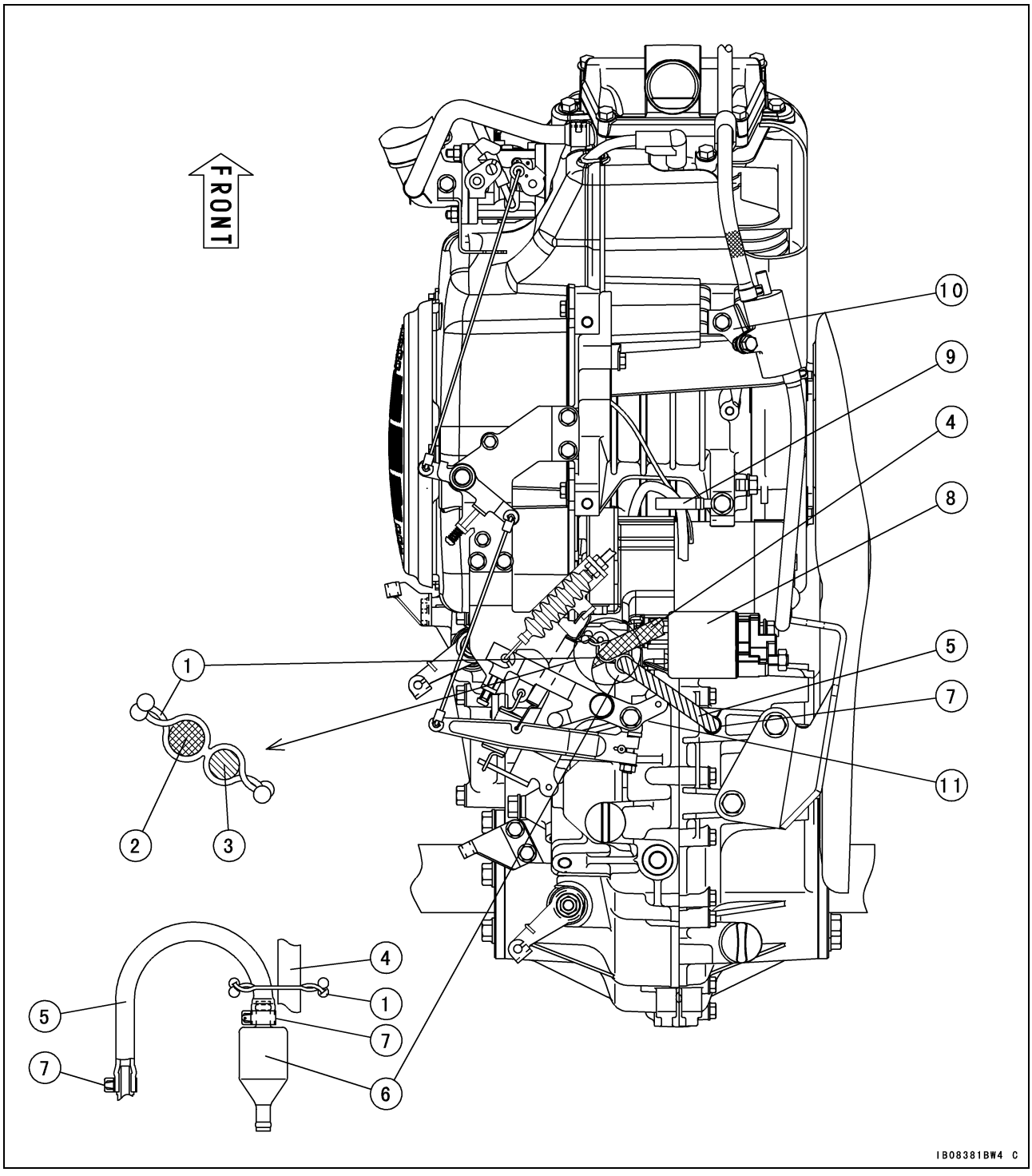

1. Clamp (Clamp the Breather Tube and Harness.)
2. Large Size Side
3. Small Size Side
4. Harness
5. Run the breather hose between the starter motor and control panel Assembly.
6. Breather Tank
7. Clamps
8. Starter Motor
9. Clamps
10. Braket
11. Control Panel Assembly.

Cable, Wire, and Hose Routing

~ KAF400AC/BC/CA

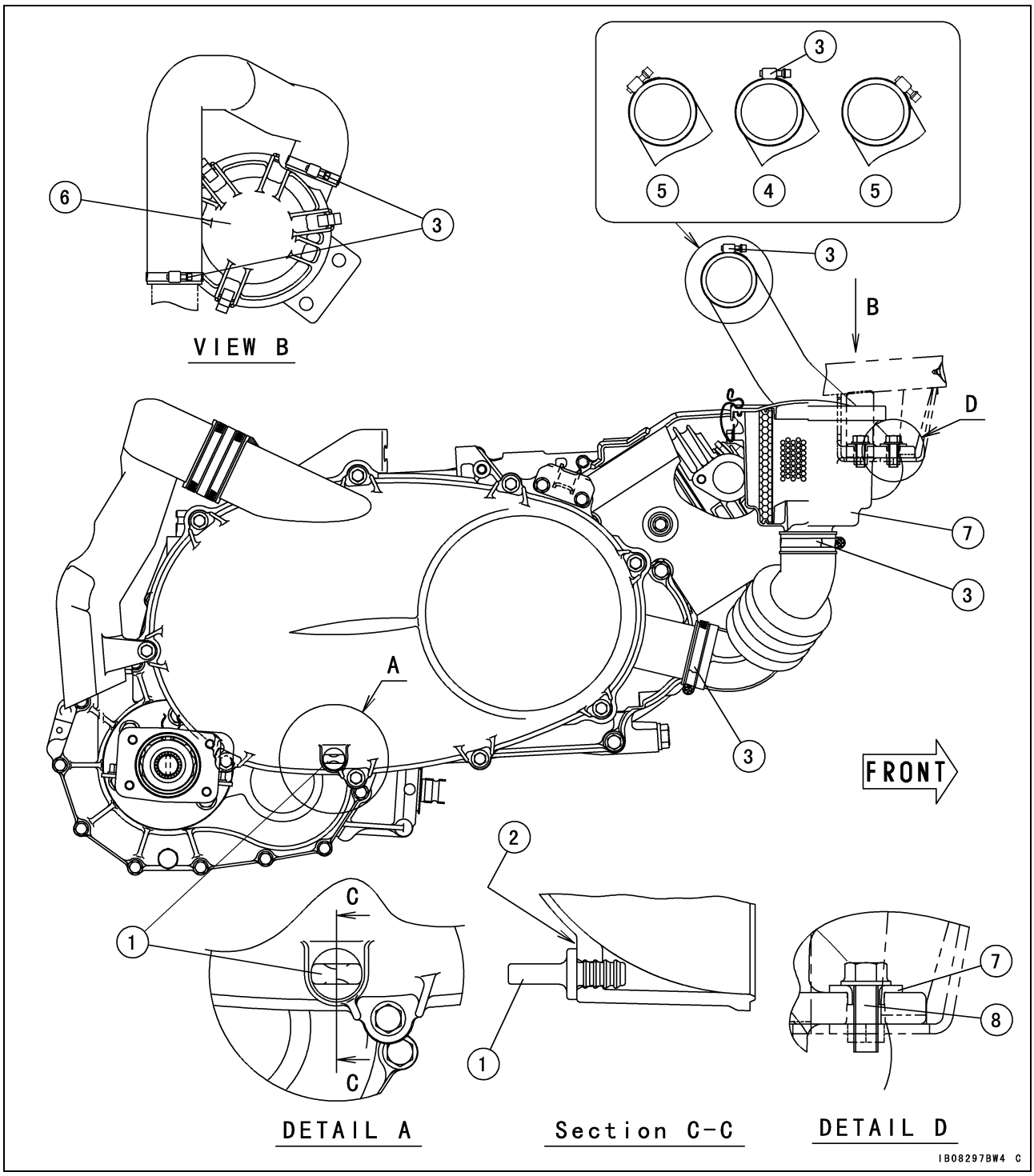

1. Drain Plug
2. Insert the plug until the plug's flange contact on this side.
3. Clamps
4. Good
5. Bad
6. Belt Converter Air Cleaner
7. Collar
8. Bolt

Cable, Wire, and Hose Routing

KAF400AD ~/BD ~

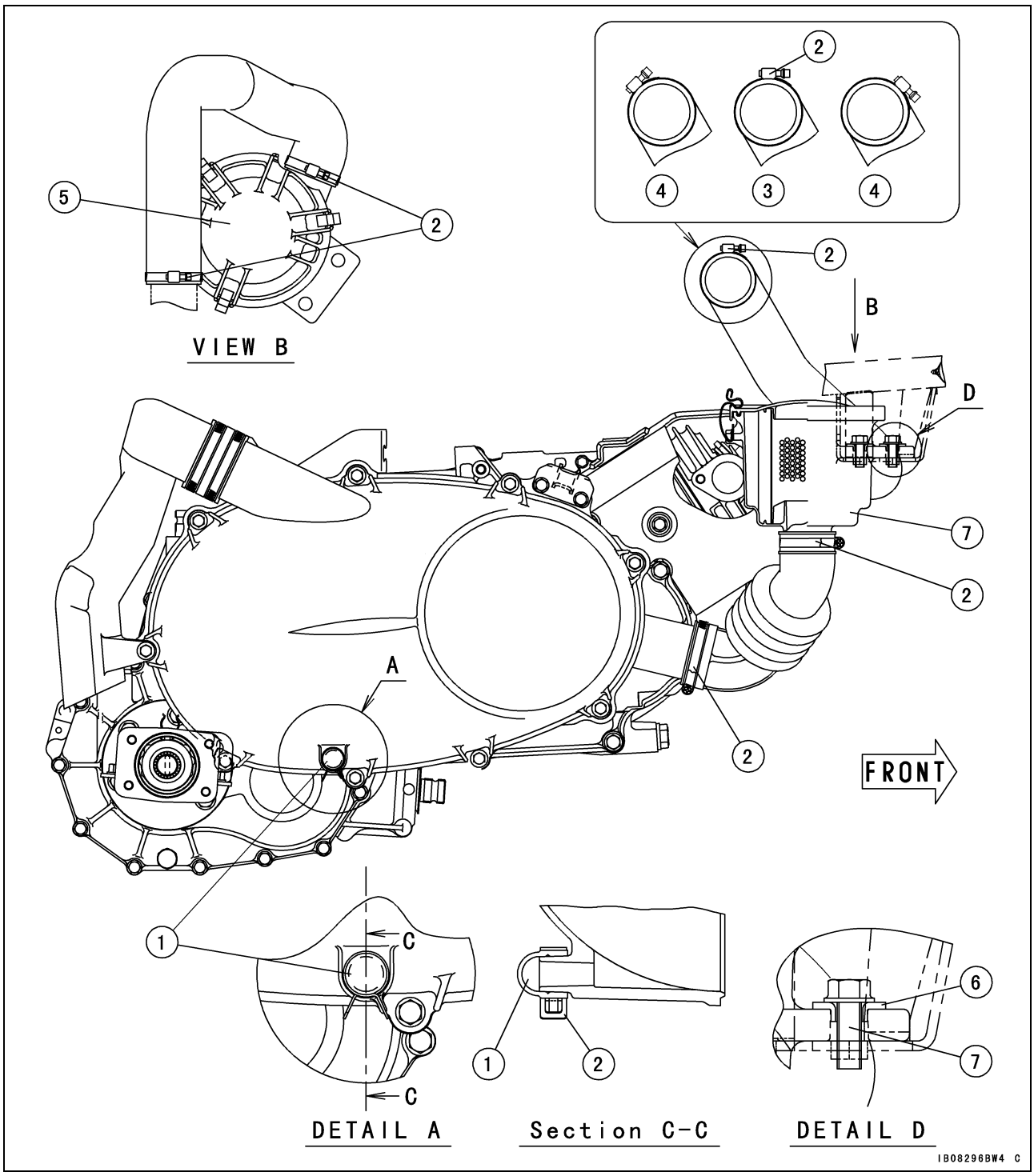

1. Drain Cover
2. Clamps
3. Good
4. Bad
5. Belt Converter Air Cleaner
6. Collar
7. Bolt

Cable, Wire, and Hose Routing

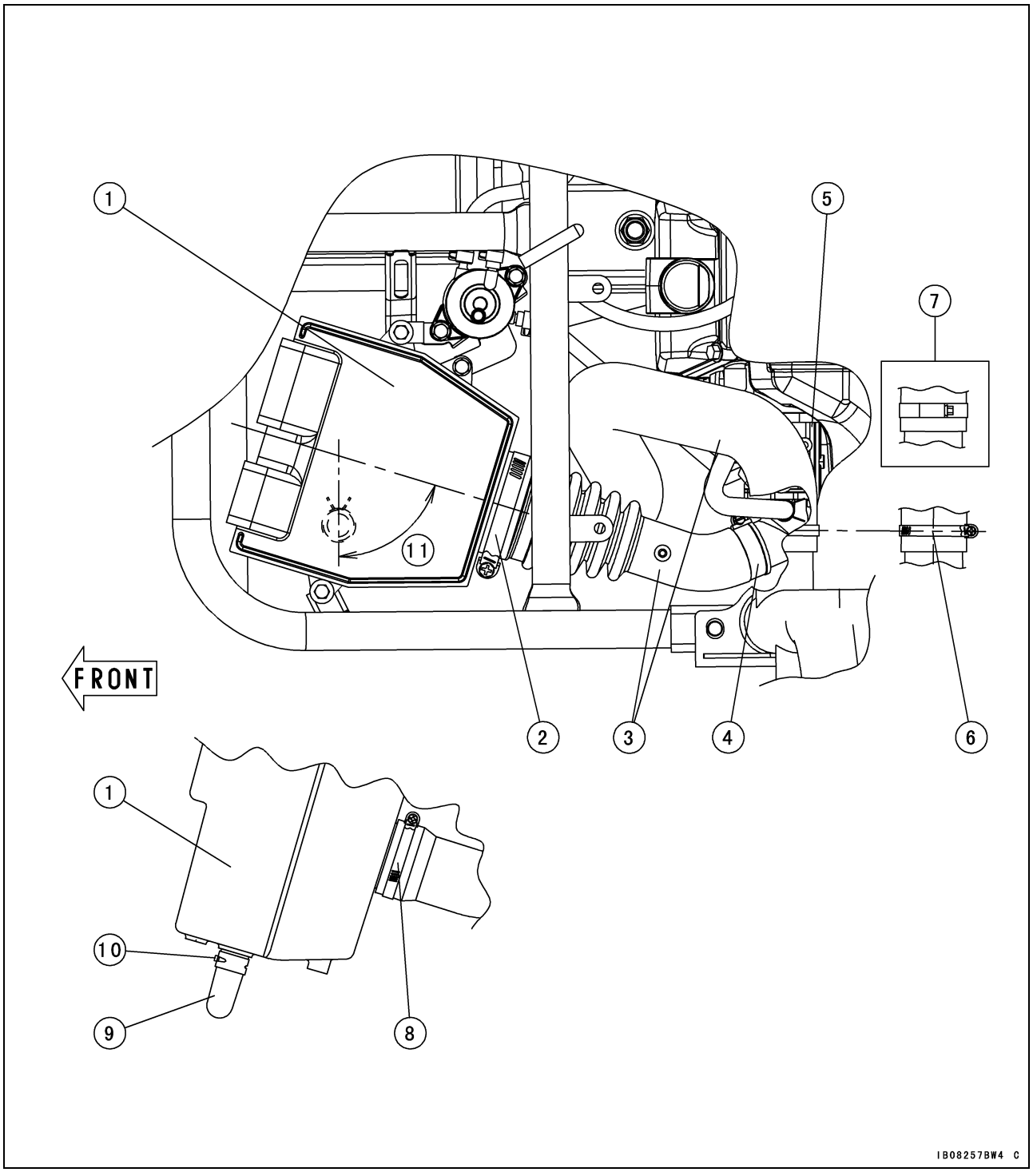

1. Air Cleaner
2. Clamp
3. Air Duct
4. Clamp
5. Carburetor
6. Clamp
7. KAF400AB ~/BB ~
8. Clamp
9. Drain Tube
10. Clamp
11. About 73°

Cable, Wire, and Hose Routing

KAF400-A1 ~ AA/B1 ~ BA/C1 ~ CA

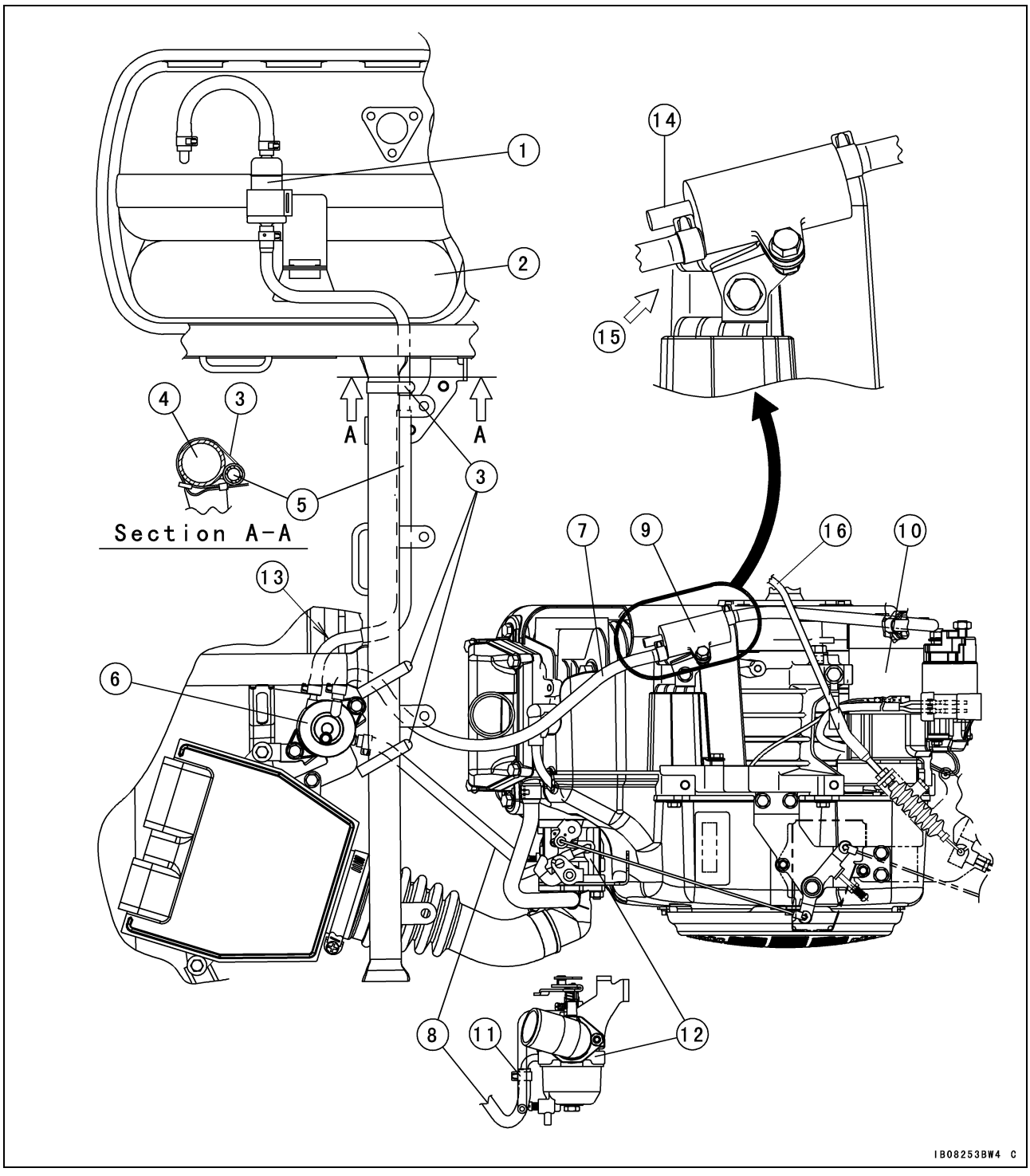

1. Fuel Filter
2. Fuel Tank
3. Bands
4. Frame Pipe
5. Fuel Hose
6. Fuel Pump
7. Vacuum Hose
8. Fuel Hose
9. Breather
10. Starter Motor
11. Clamp
12. Carburetor
13. The distance between the fuel hose end and protector end is about 70 ~ 90 mm (2.76 ~ 3.54 in.) (short side).
14. Plug Side
15. Install the vacuum hose to this side.
16. Throttle Cable

Cable, Wire, and Hose Routing

KAF400AB ~/BB ~

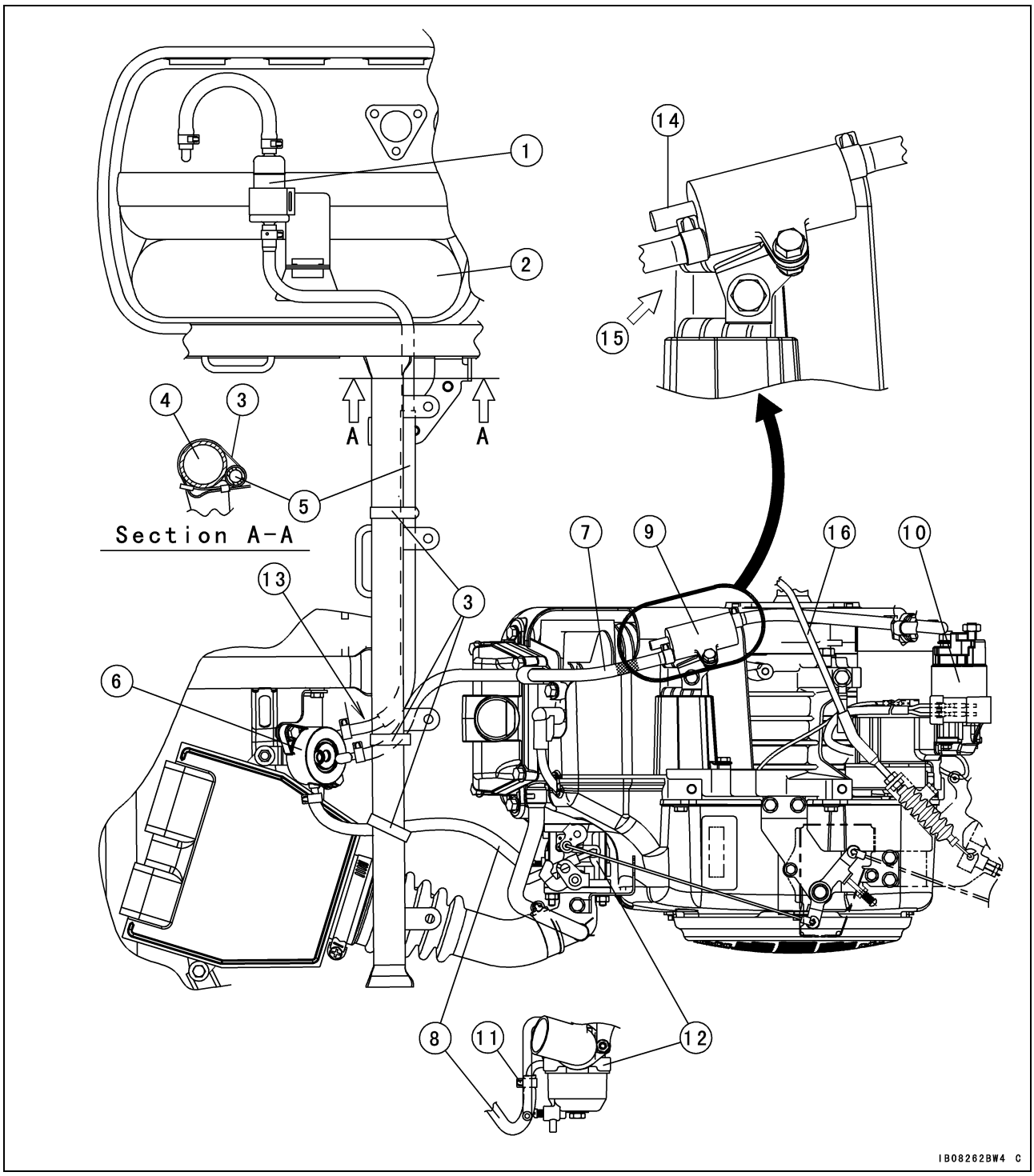

1. Fuel Filter
2. Fuel Tank
3. Bands
4. Frame Pipe
5. Fuel Hose
6. Fuel Pump
7. Vacuum Hose
8. Fuel Hose
9. Breather
10. Starter Motor
11. Clamp
12. Carburetor
13. The distance between the fuel hose end and protector end is short side.
14. Plug Side
15. Install the vacuum hose to this side.
16. Throttle Cable

Cable, Wire, and Hose Routing

CAL Model of the KAF400A8 ~ AA/B8 ~ BA/C8 ~ CA

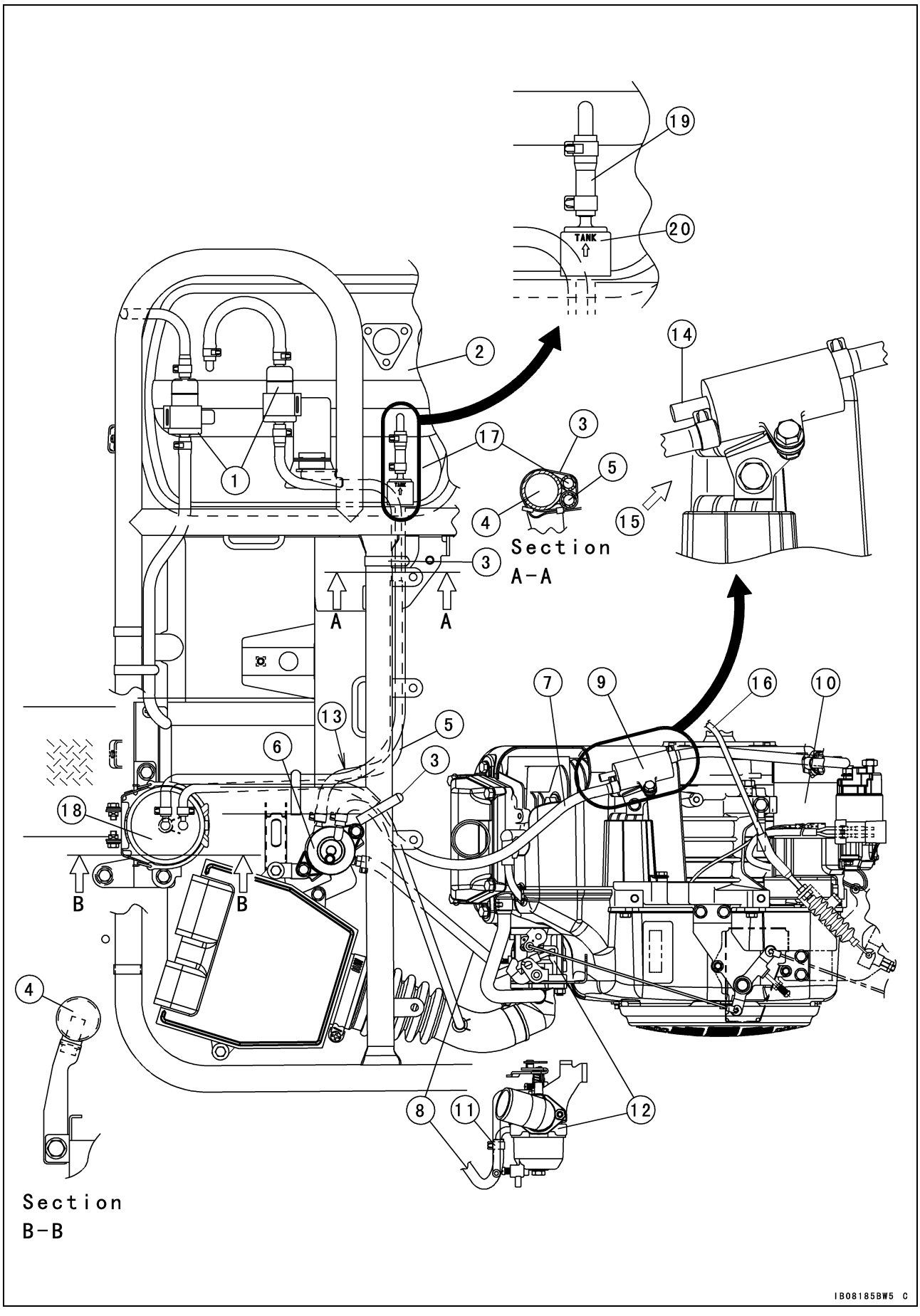

Cable, Wire, and Hose Routing

1. Fuel Filters
2. Fuel Tank
3. Bands
4. Frame Pipe
5. Fuel Hose
6. Fuel Pump
7. Vacuum Hose
8. Fuel Hose
9. Breather
10. Starter Motor
11. Clamp
12. Carburetor
13. The distance between the fuel hose end and protector end is about 70 ~ 90 mm (2.76 ~ 3.54 in.) (short side).
14. Plug Side
15. Install the vacuum hose to this side.
16. Throttle Cable
17. Fuel Hose (Canister ~ Fuel Tank)
18. Canister
19. Fuel Hose (Check Valve ~ Fuel Tank) (KAF400A9 ~ AA/B9 ~ BA/C9 ~ CA)
20. Check Valve (KAF400A9 ~ AA/B9 ~ BA/C9 ~ CA)

Cable, Wire, and Hose Routing

Other than EUR Model of the KAF400AB ~/BB ~

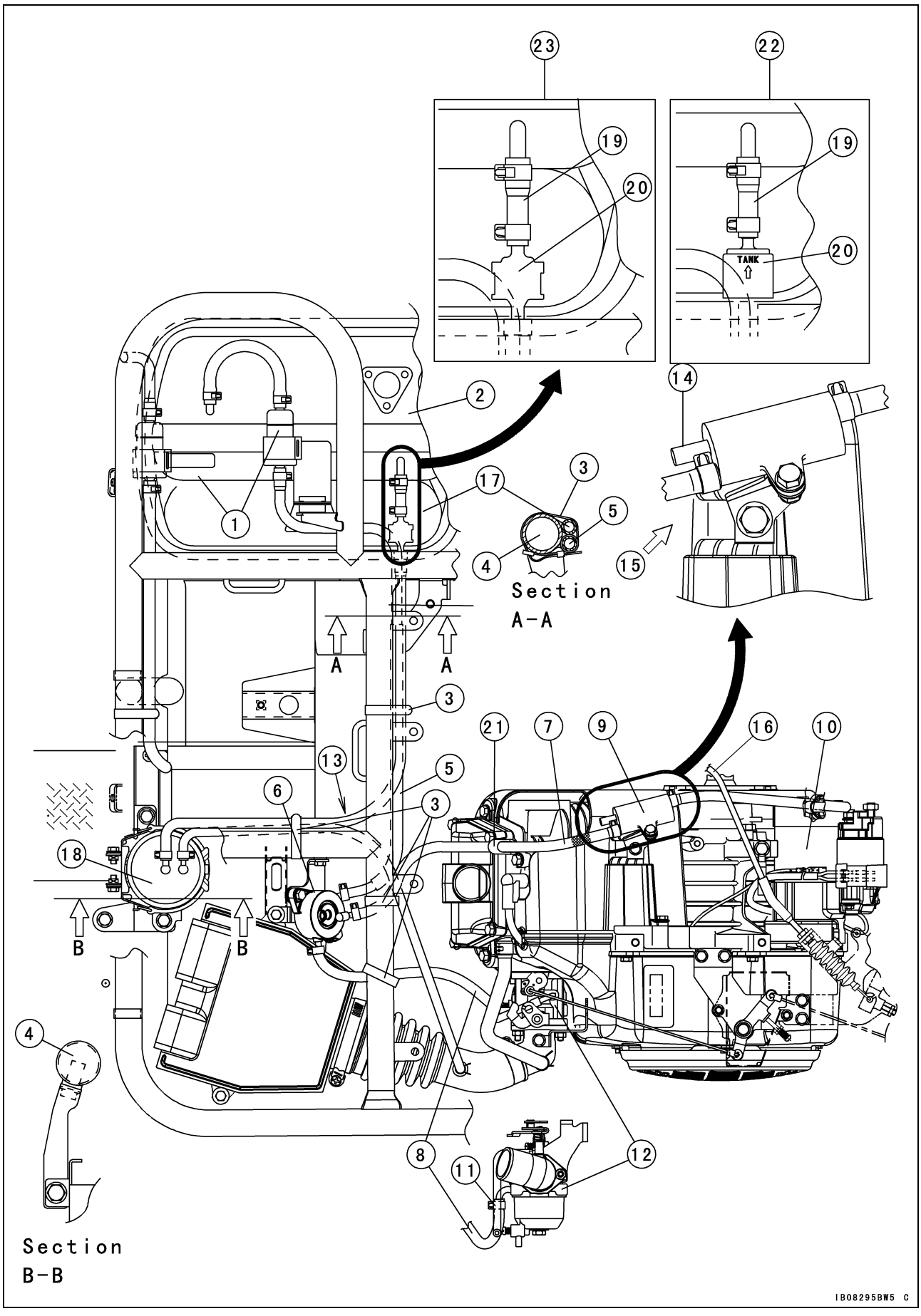

Cable, Wire, and Hose Routing

1. Fuel Filters
2. Fuel Tank
3. Bands
4. Frame Pipe
5. Fuel Hose
6. Fuel Pump
7. Vacuum Hose
8. Fuel Hose
9. Breather
10. Starter Motor
11. Clamp
12. Carburetor
13. The distance between the fuel hose end and protector end is short side.
14. Plug Side
15. Install the vacuum hose to this side.
16. Throttle Cable
17. Fuel Hose (Canister ~ Fuel Tank)
18. Canister
19. Fuel Hose (Check Valve ~ Fuel Tank)
20. Check Valve
21. Clamp
22. KAF400AB ~ AC/BB ~ BC
23. KAF400AD ~/BD ~

Cable, Wire, and Hose Routing

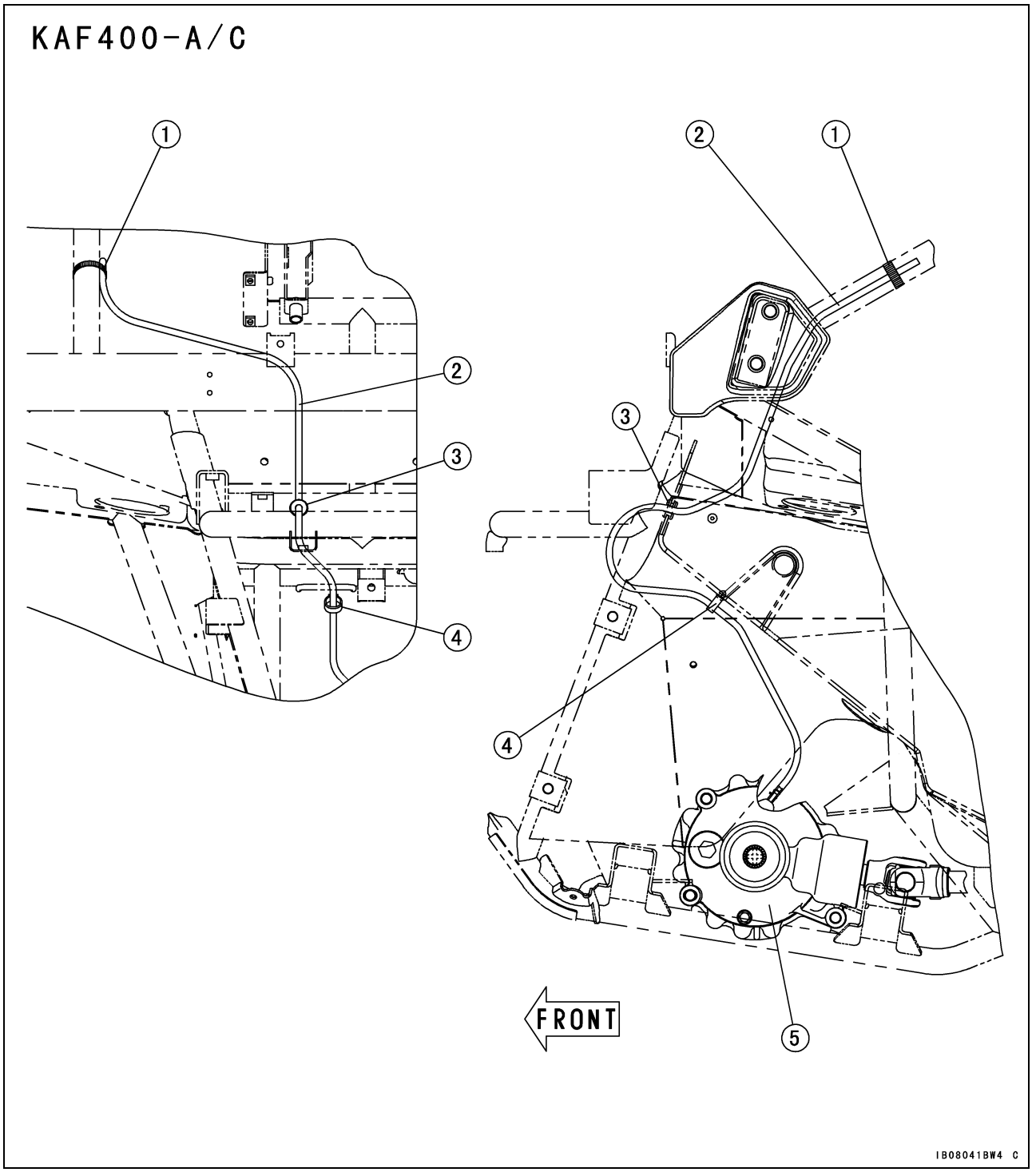

1. Band
2. Front Final Gear Case Breather Hose
3. Grommet
4. Clamp
5. Front Final Gear Case

Cable, Wire, and Hose Routing

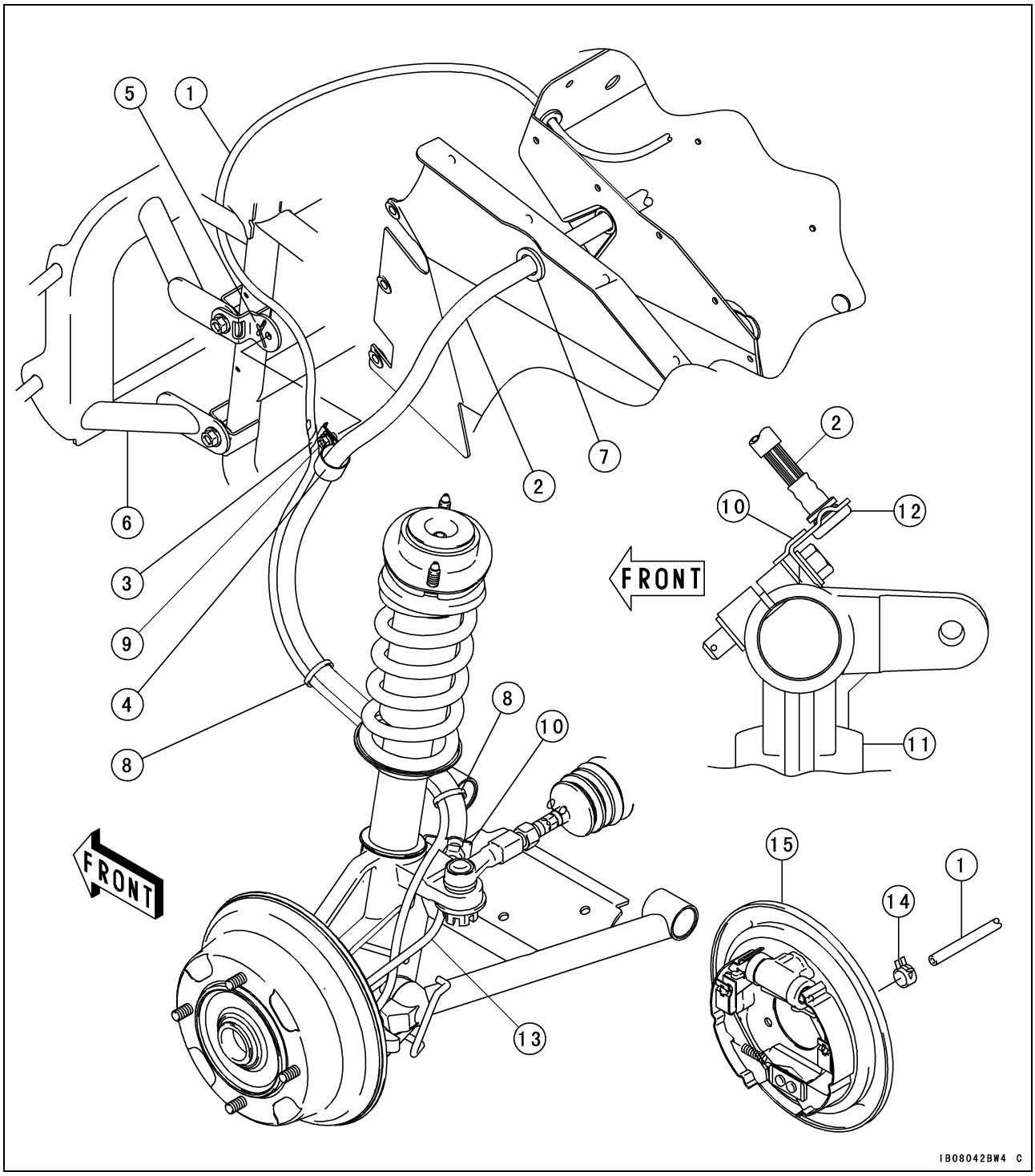

1. Breather Hose (KAF400-A/C)
2. Brake Hose
3. Clamp
4. Clamp
5. Clamp Bracket
6. Front Guard
7. Grommet
8. Bands
9. Bolt
10. Bracket
11. Knuckle
12. Retainer
13. Brake Pipe
14. Clamp
15. Front Brake Panel

Cable, Wire, and Hose Routing

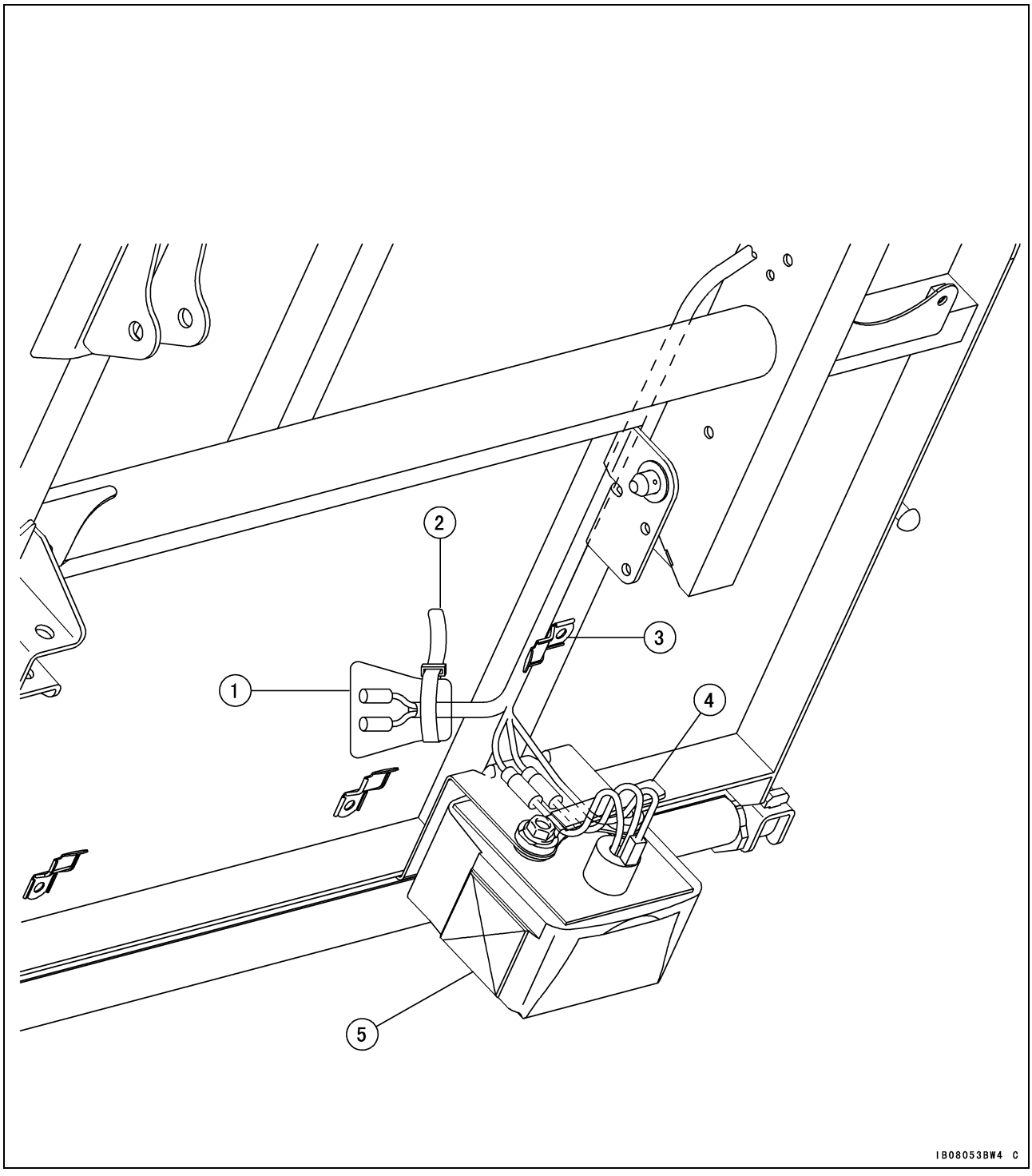

1. Cover
2. Band
3. Clamp
4. Clamp
5. Tail/Brake Light

Part No.99924-1349-13

MODEL APPLICATION

Year	Model	Beginning Frame No.
2005	KAF400-A1	JK1AFEA1□5B500001
2005	KAF400-B1	JK1AFEB1□5B500001 JK1AF400BBB600001
2005	KAF400-C1	JK1AFEC1□5B500001
2006	KAF400A6	JK1AFEA1□6B507301
2006	KAF400B6	JK1AFEB1□6B502901 JK1AF400BBB600501
2006	KAF400C6	JK1AFEC1□6B501901
2007	KAF400A7	JK1AFEA1□7B516301 JK1AF400AAB600001
2007	KAF400B7	JK1AFEB1□7B505651 JK1AF400BBB600701
2007	KAF400C7	JK1AFEC1□7B504301
2008	KAF400A8	JK1AFEA1□8B537001 JK1AF400AAB600501
2008	KAF400B8	JK1AFEB1□8B512001 JK1AF400BBB601001
2008	KAF400C8	JK1AFEC1□8B509501
2009	KAF400A9	JK1AFEA1□9B542001 JK1AF400AAB601001
2009	KAF400B9	JK1AFEB1□9B518001 JK1AF400BBB603001
2009	KAF400C9	JK1AFEC1□9B511001
2010	KAF400AA	JK1AFEA1□AB548501 JK1AF400AAB601601
2010	KAF400BA	JK1AFEB1□AB519601 JK1AF400BBB602101
2010	KAF400CA	JK1AFEC1□AB512601
2011	KAF400AB	JK1AFEA1□BB551001 JK1AF400AAB601901
2011	KAF400BB	JK1AFEB1□BB520801 JK1AF400BBB602401
2012	KAF400AC	JK1AFEA1□CB557101 JK1AF400AAB602501
2012	KAF400BC	JK1AFEB1□CB522401 JK1AF400BBB602801
2013	KAF400AD	JK1AFEA1□DB561201 JK1AF400AAB603401
2013	KAF400BD	JK1AFEB1□DB524201 JK1AF400BBB603301
2014	KAF400AE	JK1AFEA1□EB564401 JK1AF400AAB603801
2014	KAF400BE	JK1AFEB1□EB525601 JK1AF400BBB603701
2015	KAF400AF	JK1AFEA1□FB568301 JK1AF400AAB604301
2015	KAF400BF	JK1AFEB1□FB527201 JK1AF400BBB604101

□:This digit in the frame number changes from one machine to another.

Kawasaki Heavy Industries, Ltd. Motorcycle & Engine Company

Printed in Japan