Kawasaki

BRUTE FORCE 750 4×4i

KVF 750 4×4

All Terrain Vehicle Service Manual

Quick Reference Guide

This quick reference guide will assist you in locating a desired topic or procedure.

- Bend the pages back to match the black tab of the desired chapter number with the black tab on the edge at each table of contents page.
- Refer to the sectional table of contents for the exact pages to locate the specific topic required.

Kawasaki

BRUTE FORCE 750 4×4i
KVF 750 4×4

All Terrain Vehicle Service Manual

4th Edition (2) : July. 12, 2006 (K)

LIST OF ABBREVIATIONS

A	ampere(s)	lb	pounds(s)
ABDC	after bottom dead center	m	meter(s)
AC	alternating current	min	minute(s)
ATDC	after top dead center	N	newton(s)
BBDC	before bottom dead center	Pa	pascal(s)
BDC	bottom dead center	PS	horsepower
BTDC	before top dead center	psi	pound(s) per square inch
°C	degree(s) Celcius	r	revolution
DC	direct current	rpm	revolution(s) per minute
F	farad(s)	TDC	top dead center
°F	degree(s) Fahrenheit	TIR	total indicator reading
ft	foot, feet	V	volt(s)
g	gram(s)	W	watt(s)
h	hour(s)	Ω	ohm(s)
L	liter(s)		

EMISSION CONTROL INFORMATION

To protect the environment in which we all live, Kawasaki has incorporated crankcase emission (1) and exhaust emission (2) control systems in compliance with applicable regulations of the United States Environmental Protection Agency and California Air Resources Board.

1. Crankcase Emission Control System
   A sealed-type crankcase emission control system is used to eliminate blow-by gases. The blow-by gases are led to the breather chamber through the crankcase. Then, it is led to the air cleaner. Oil is separated from the gases while passing through the inside of the breather chamber from the crankcase, and then returned back to the bottom of crankcase.

2. Exhaust Emission Control System
   The exhaust emission control system applied to this engine family is engine modifications that consist of a modified carburetor and an ignition system having optimum ignition timing characteristics.

   The carburetor has been calibrated to provide lean air/fuel mixture characteristics and optimum fuel economy with a suitable air cleaner and exhaust system.

   A maintenance free ignition system provides the most favorable ignition timing and helps maintain a thorough combustion process within the engine which contributes to a reduction of exhaust pollutants entering the atmosphere.

   The Clean Air Act, which is the Federal law covering motor vehicle pollution, contains what is commonly referred to as the Act's "tampering provisions."
   "Sec. 203(a) The following acts and the causing thereof are prohibited...

   (3)(A) for any person to remove or render inoperative any device or element of design installed on or in a motor vehicle or motor vehicle engine in compliance with regulations under this title prior to its sale and delivery to the ultimate purchaser, or for any manufacturer or dealer knowingly to remove or render inoperative any such device or element of design after such sale and delivery to the ultimate purchaser.

   (3)(B) for any person engaged in the business of repairing, servicing, selling, leasing, or trading motor vehicles or motor vehicle engines, or who operates a fleet of motor vehicles knowingly to remove or render inoperative any device or element of design installed on or in a motor vehicle or motor vehicle engine in compliance with regulations under this title following its sale and delivery to the ultimate purchaser..."

NOTE

○ *The phrase "remove or render inoperative any device or element of design" has been generally interpreted as follows:*

1. *Tampering does not include the temporary removal or rendering inoperative of devices or elements of design in order to perform maintenance.*
2. *Tampering could include:*
   a. *Maladjustment of vehicle components such that the emission standards are exceeded.*
   b. *Use of replacement parts or accessories which adversely affect the performance or durability of the vehicle.*
   c. *Addition of components or accessories that result in the vehicle exceeding the standards.*
   d. *Permanently removing, disconnecting, or rendering inoperative any component or element of design of the emission control systems.*

WE RECOMMEND THAT ALL DEALERS OBSERVE THESE PROVISIONS OF FEDERAL LAW, THE VIOLATION OF WHICH IS PUNISHABLE BY CIVIL PENALTIES NOT EXCEEDING $10,000 PER VIOLATION.

PLEASE DO NOT TAMPER WITH NOISE CONTROL SYSTEM (US MODEL only)

TAMPERING WITH EMISSION CONTROL SYSTEM PROHIBITED:

Federal regulations and California State law prohibit the following acts or the causing thereof: (1) the removal or rendering inoperative by any person other than for purposes of maintenance, repair, or replacement, of any device or element of design incorporated into any new vehicle for the purposes of emission control prior to its sale or delivery to the ultimate purchaser or while it is in use, or (2) the use of the vehicle after such device or element of design has been removed or rendered inoperative by any person.

Do not tamper with the original emission related parts:

- Carburetor or internal parts
- Spark Plug
- Magneto ignition system
- Air Cleaner element

TAMPERING WITH NOISE CONTROL SYSTEM PROHIBITED:

Federal law prohibits the following acts or the causing thereof: (1) the removal or rendering inoperative by any person other than for purposes of maintenance, repair, or replacement, of any device or element of design incorporated into any new vehicle for the purpose of noise control prior to its sale or delivery to the ultimate purchaser or while it is in use, or (2) the use of the vehicle after such device or element of design has been removed or rendered inoperative by any person.

Among those acts presumed to constitute tampering are the acts listed below:

* Replacement of the original exhaust system or muffler with a component not in compliance with Federal regulations.
* Removal of the muffler(s) or any internal portion of the muffler(s).
* Removal of the air box or air box cover.
* Modifications to the muffler(s) or air intake system by cutting, drilling, or other means if such modifications result in increased noise levels.

Foreword

This manual is designed primarily for use by trained mechanics in a properly equipped shop. However, it contains enough detail and basic information to make it useful to the owner who desires to perform his own basic maintenance and repair work. A basic knowledge of mechanics, the proper use of tools, and workshop procedures must be understood in order to carry out maintenance and repair satisfactorily. Whenever the owner has insufficient experience or doubts his ability to do the work, all adjustments, maintenance, and repair should be carried out only by qualified mechanics.

In order to perform the work efficiently and to avoid costly mistakes, read the text, thoroughly familiarize yourself with the procedures before starting work, and then do the work carefully in a clean area. Whenever special tools or equipment are specified, do not use makeshift tools or equipment. Precision measurements can only be made if the proper instruments are used, and the use of substitute tools may adversely affect safe operation.

For the duration of the warranty period, we recommend that all repairs and scheduled maintenance be performed in accordance with this service manual. Any owner maintenance or repair procedure not performed in accordance with this manual may void the warranty.

To get the longest life out of your vehicle:

- Follow the Periodic Maintenance Chart in the Service Manual.
- Be alert for problems and non-scheduled maintenance.
- Use proper tools and genuine Kawasaki Vehicle parts. Special tools, gauges, and testers that are necessary when servicing Kawasaki vehicles are introduced by the Service Manual. Genuine parts provided as spare parts are listed in the Parts Catalog.
- Follow the procedures in this manual carefully. Don't take shortcuts.
- Remember to keep complete records of maintenance and repair with dates and any new parts installed.

How to Use This Manual

In this manual, the product is divided into its major systems and these systems make up the manual's chapters. The Quick Reference Guide shows you all of the product's system and assists in locating their chapters. Each chapter in turn has its own comprehensive Table of Contents.

For example, if you want ignition coil information, use the Quick Reference Guide to locate the Electrical System chapter. Then, use the Table of Contents on the first page of the chapter to find the Ignition Coil section.

Whenever you see these WARNING and CAUTION symbols, heed their instructions! Always follow safe operating and maintenance practices.

⚠ WARNING

This warning symbol identifies special instructions or procedures which, if not correctly followed, could result in personal injury, or loss of life.

CAUTION

This caution symbol identifies special instructions or procedures which, if not strictly observed, could result in damage to or destruction of equipment.

This manual contains four more symbols (in addition to WARNING and CAUTION) which will help you distinguish different types of information.

NOTE

○ *This note symbol indicates points of particular interest for more efficient and convenient operation.*

- ● Indicates a procedural step or work to be done.
- ○ Indicates a procedural sub-step or how to do the work of the procedural step it follows. It also precedes the text of a NOTE.
- ★ Indicates a conditional step or what action to take based on the results of the test or inspection in the procedural step or sub-step it follows.

In most chapters an exploded view illustration of the system components follows the Table of Contents. In these illustrations you will find the instructions indicating which parts require specified tightening torque, oil, grease or a locking agent during assembly.

General Information

Table of Contents

Before Servicing

Before starting to perform an inspection service or carry out a disassembly and reassembly operation on a vehicle, read the precautions given below. To facilitate actual operations, notes, illustrations, photographs, cautions, and detailed descriptions have been included in each chapter wherever necessary. This section explains the items that require particular attention during the removal and reinstallation or disassembly and reassembly of general parts.

Especially note the following:

Battery Ground

Before completing any service on the vehicle, disconnect the battery wires from the battery to prevent the engine from accidentally turning over. Disconnect the ground cable (–) first and then the positive (+). When completed with the service, first connect the positive (+) cable to the positive (+) terminal of the battery then the negative (–) cable to the negative terminal.

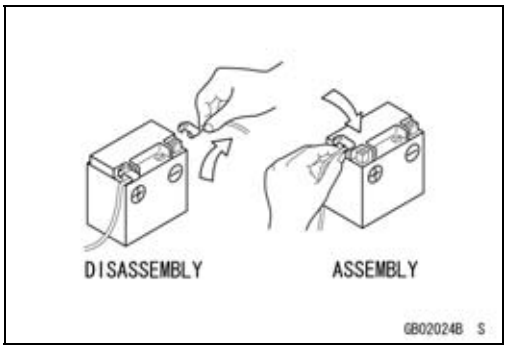

Edges of Parts

Lift large or heavy parts wearing gloves to prevent injury from possible sharp edges on the parts.

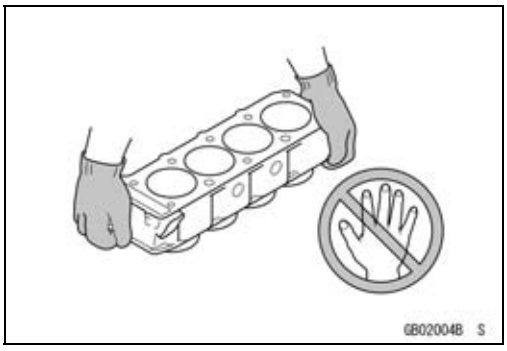

Solvent

Use a high-flush point solvent when cleaning parts. High -flush point solvent should be used according to directions of the solvent manufacturer.

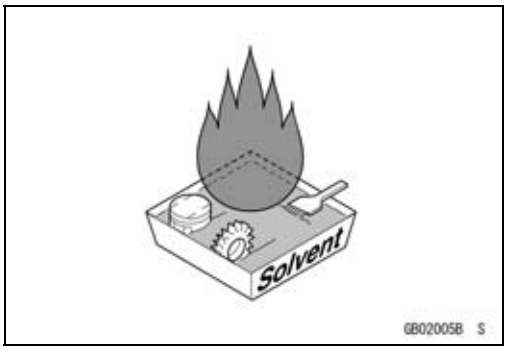

Cleaning vehicle before disassembly

Clean the vehicle thoroughly before disassembly. Dirt or other foreign materials entering into sealed areas during vehicle disassembly can cause excessive wear and decrease performance of the vehicle.

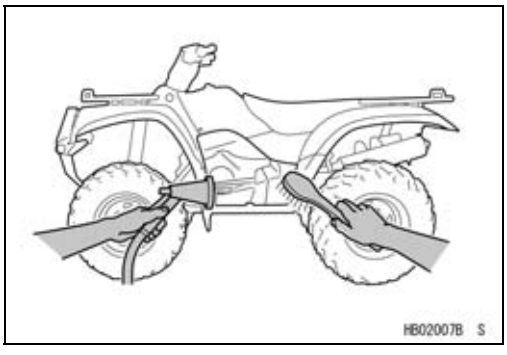

Before Servicing

Arrangement and Cleaning of Removed Parts

Disassembled parts are easy to confuse. Arrange the parts according to the order the parts were disassembled and clean the parts in order prior to assembly.

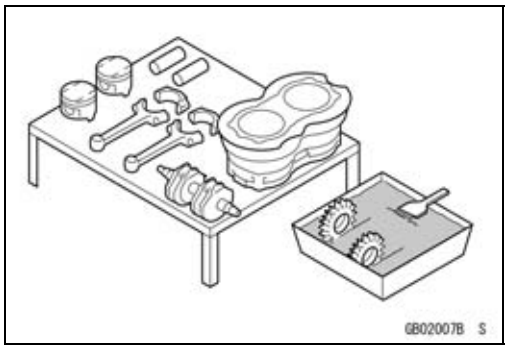

Storage of Removed Parts

After all the parts including subassembly parts have been cleaned, store the parts in a clean area. Put a clean cloth or plastic sheet over the parts to protect from any foreign materials that may collect before re-assembly.

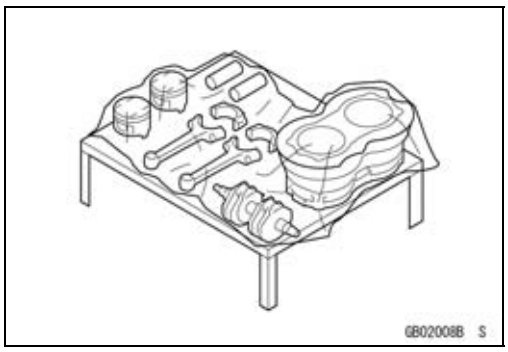

Inspection

Reuse of worn or damaged parts may lead to serious accident. Visually inspect removed parts for corrosion, discoloration, or other damage. Refer to the appropriate sections of this manual for service limits on individual parts. Replace the parts if any damage has been found or if the part is beyond its service limit.

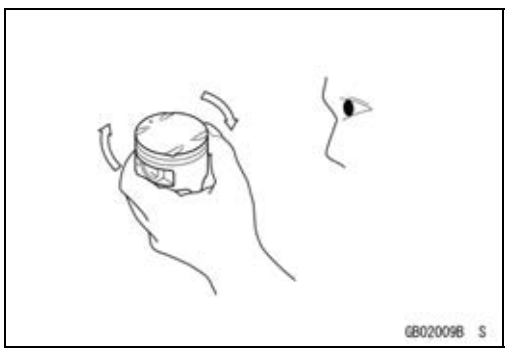

Replacement Parts

Replacement Parts must be KAWASAKI genuine or recommended by KAWASAKI. Gaskets, O-rings, Oil seals, Grease seals, circlips or cotter pins must be replaced with new ones whenever disassembled.

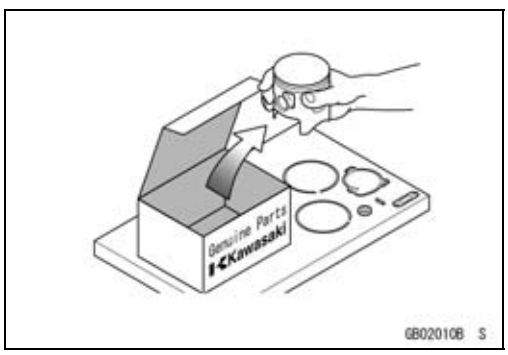

Assembly Order

In most cases assembly order is the reverse of disassembly, however, if assembly order is provided in this Service Manual, follow the procedures given.

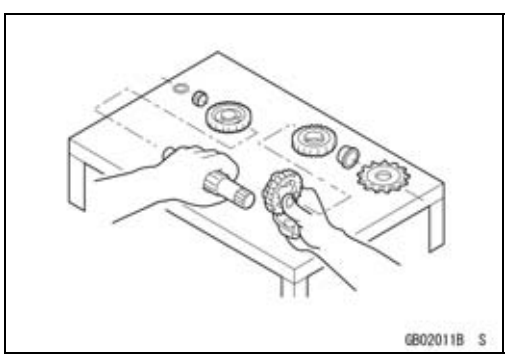

Before Servicing

Tightening Sequence

Generally, when installing a part with several bolts, nuts, or screws, start them all in their holes and tighten them to a snug fit. Then tighten them according to the specified sequence to prevent case warpage or deformation which can lead to malfunction. Conversely when loosening the bolts, nuts, or screws, first loosen all of them by about a quarter turn and then remove them. If the specified tightening sequence is not indicated, tighten the fasteners alternating diagonally.

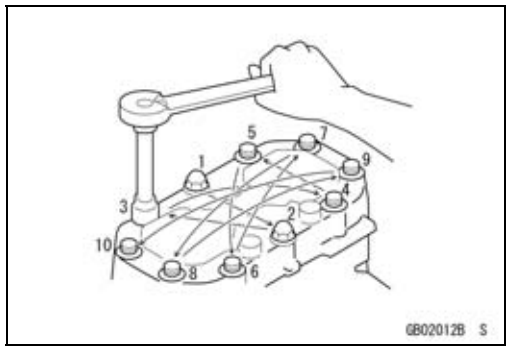

Tightening Torque

Incorrect torque applied to a bolt, nut, or screw may lead to serious damage. Tighten fasteners to the specified torque using a good quality torque wrench.

Often, the tightening sequence is followed twice initial tightening and final tightening with torque wrench.

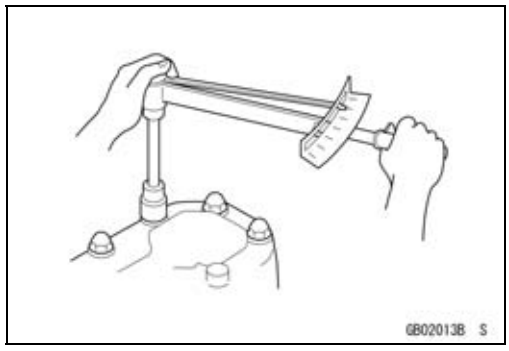

Force

Use common sense during disassembly and assembly, excessive force can cause expensive or hard to repair damage. When necessary, remove screws that have a non-permanent locking agent applied using an impact driver. Use a plastic-faced mallet whenever tapping is necessary.

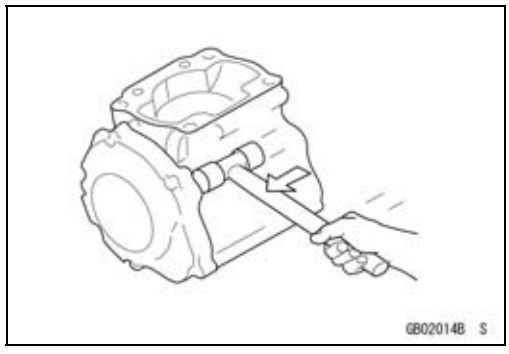

Gasket, O-ring

Hardening, shrinkage, or damage of both gaskets and O-rings after disassembly can reduce sealing performance. Remove old gaskets and clean the sealing surfaces thoroughly so that no gasket material or other material remains. Install new gaskets and replace used O-rings when re-assembling.

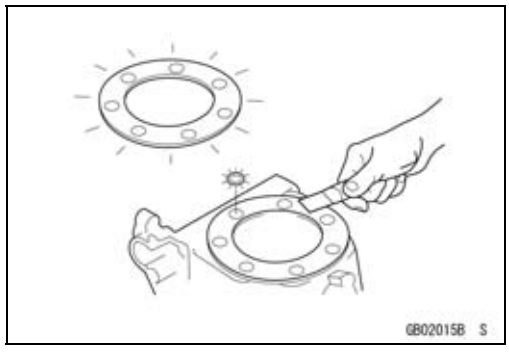

Liquid Gasket, Locking Agent

For applications that require Liquid Gasket or a Non-Permanent Locking Agent, clean the surfaces so that no oil residue remains before applying liquid gasket or locking agent. Do not apply them excessively. Excessive application can clog oil passages and cause serious damage.

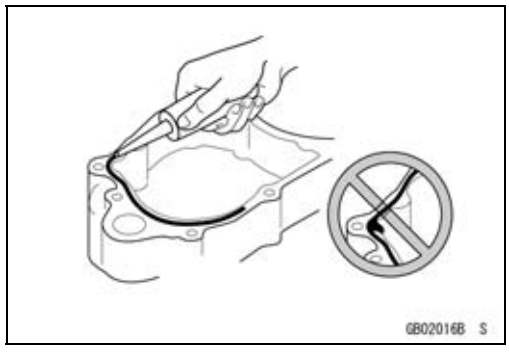

Before Servicing

Press

For items such as bearings or oil seals that must be pressed into place, apply small amount of oil to the contact area. Be sure to maintain proper alignment and use smooth movements when installing.

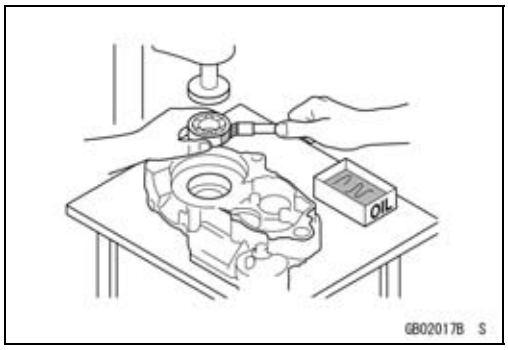

Ball Bearing and Needle Bearing

Do not remove pressed ball or needle unless removal is absolutely necessary. Replace with new ones whenever removed. Press bearings with the manufacturer and size marks facing out. Press the bearing into place by putting pressure on the correct bearing race as shown.

Pressing the incorrect race can cause pressure between the inner and outer race and result in bearing damage.

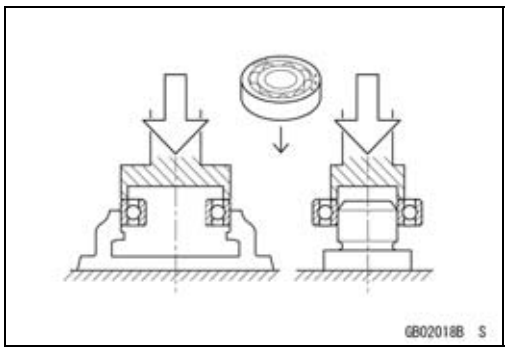

Oil Seal, Grease Seal

Do not remove pressed oil or grease seals unless removal is necessary. Replace with new ones whenever removed. Press new oil seals with manufacture and size marks facing out. Make sure the seal is aligned properly when installing.

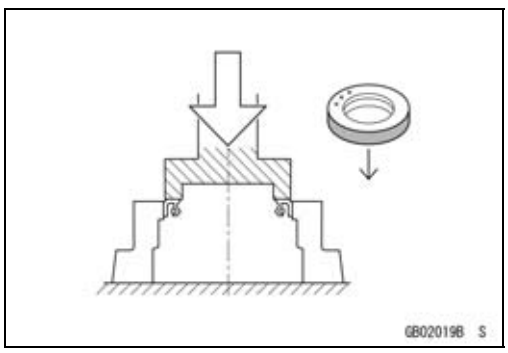

Apply specified grease to the lip of seal before installing the seal.

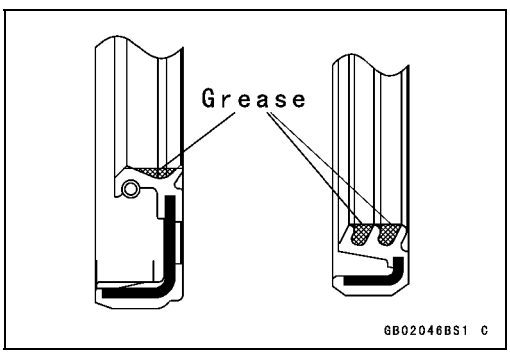

Circlips, Cotter Pins

Replace circlips or cotter pins that were removed with new ones. Take care not to open the clip excessively when installing to prevent deformation.

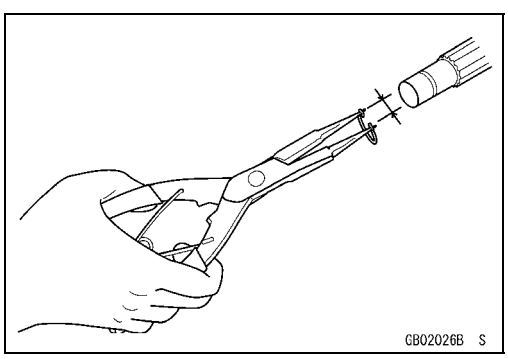

Before Servicing

Lubrication

It is important to lubricate rotating or sliding parts during assembly to minimize wear during initial operation. Lubrication points are called out throughout this manual, apply the specific oil or grease as specified.

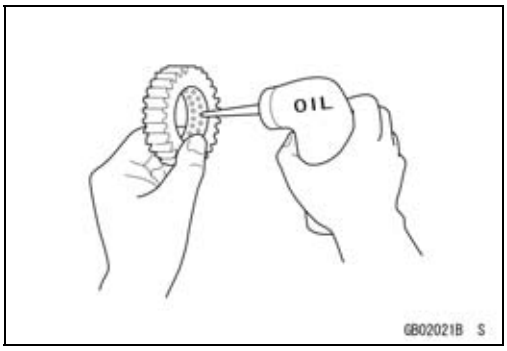

Direction of Engine Rotation

When rotating the crankshaft by hand, the free play amount of rotating direction will affect the adjustment. Rotate the crankshaft to positive direction (clockwise viewed from output side).

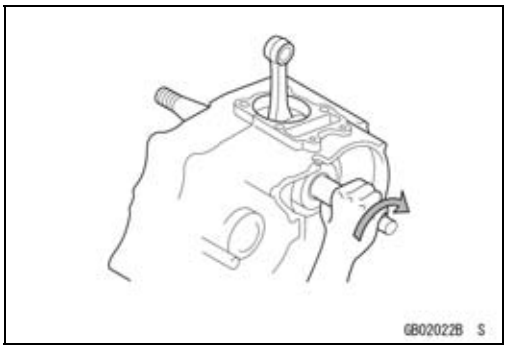

Electrical Wires

A two-color wire is identified first by the primary color and then the stripe color. Unless instructed otherwise, electrical wires must be connected to those of the same color.

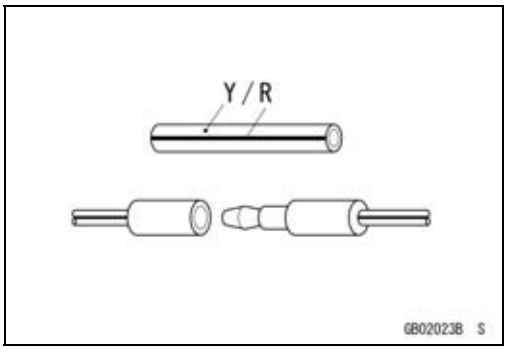

Instrument

Use a meter that has enough accuracy for an accurate measurement. Read the manufacture's instructions thoroughly before using the meter. Incorrect values may lead to improper adjustments.

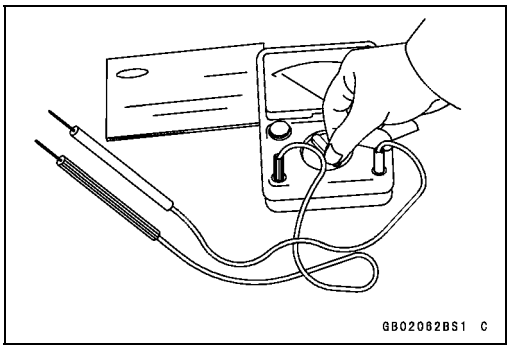

Model Identification

KVF750-A1 Left Side View

KVF750-A1 Right Side View

The KVF750-B1 is a camouflage-surface-treated model and identical to the KVF750-A1, the base model, in every other aspect: controls, features, and specifications.

The KVF750C is identical to the KVF750A in every other aspect, that is, controls, features, and specifications.

General Specifications

Items	KVF750-A1, A6F ~, B1, B6F ~, C6F ~
Dimensions	
Overall Length	2 192 mm (86.30 in.)
Overall Width	1 177 mm (46.34 in.)
Overall Height	1 249 mm (49.17 in.)
Wheelbase	1 283 mm (50.51 in.)
Ground Clearance:	269 mm (10.59 in.)
Seat Height	935 mm (36.81 in.)
Dry Mass	274 kg (604 lb), (EUR) 274.5 kg (605 lb)
Curb Mass:	
Front	147.5 kg (325 lb), (EUR) 148 kg (326 lb)
Rear	149 kg (329 lb)
Fuel Tank Capacity	20.5 L (5.4 US gal)
Performance	
Minimum Turning Radius	3.2 m (10.5 ft)
Engine	
Type	4-stroke, SOHC, V2-cylinders
Cooling System	Liquid-cooled
Bore and Stroke	85 × 66 mm (3.35 × 2.60 in.)
Displacement	749 cm^3 (45.7 cu in.)
Compression Ratio	8.8 : 1
Maximum Horsepower	37.4 kW (50.9 PS) @6 500 r/min (rpm), (US) –
Maximum Torque	60.7 N·m (6.2 kgf·m, 45 ft·lb) @5 000 r/min (rpm)
Carburetion System	Carburetor, Keihin CVKR-34
Starting System	Electric Starter & Recoil Starter
Ignition System	Digital DC-CDI
Timing Advance	Electronically advanced
Ignition Timing	From 5° BTDC @1 150 r/min (rpm) to 28° BTDC @5 000 r/min (rpm)
Spark Plug	NGK CR7E, DENSO U22ESR-N
Cylinder Numbering Method	Front to rear, 1-2
Firing Order	1-2
Valve Timing:	
Inlet:	
Open	20° BTDC
Close	44° ABDC
Duration	244°
Exhaust:	
Open	44° BBDC
Close	20° ATDC
Duration	244°
Lubrication System	Forced lubrication (wet sump)

General Specifications

Items	KVF750-A1, A6F ~, B1, B6F ~, C6F ~
Engine oil:	
Type	API SF or SG
	API SH, SJ or SL with JASO MA
Viscosity	SAE 10W-40
Capacity	2.6 L (2.7 US qt)
Drive Train	
Primary Reduction System:	
Type	Belt converter
Reduction Ratio	3.122 ~ 0.635
Transmission:	
Type	2-speed and reverse
Gear Ratios:	
Forward:	
High	3.098 (30/26 × 29/18 × 20/12)
Low	4.833 (36/20 × 29/18 × 20/12)
Reverse	4.028 (16/12 × 18/16 × 29/18 × 20/12)
Final Drive System:	
Type	Shaft 2WD/4WD
Reduction Ratio	4.375 (35/8)
Overall Drive Ratio:	
Forward:	
High	42.32 ~ 8.61
Low	66.02 ~ 13.43
Reverse	55.01 ~ 11.19
Front Final Gear Case Oil:	
Type	API SF or SG
	API SH, SJ or SL with JASO MA
Viscosity	SAE10W-40
Capacity	0.40 L (0.42 US qt)
Rear Final Gear Case Oil:	
Type	MOBIL FLUID 424, CITGO TRANSGARD TRACTOR HYDRAULIC FLUID, or EXXON HYDRAUL 560
Capacity	0.72 L (0.76 US qt)
Frame	
Type	Double tubular
Caster (Rake Angle)	2.0°
	5.5° (A1 ~ A6F, B1 ~ B6F, C6F)
Camber	0°
King Pin Angle	11°
Trail	10 mm (0.39 in.)
	28 mm (1.10 in.) (A1 ~ A6F, B1 ~ B6F, C6F)
Tread:	
Front	915 mm (36.23 in.)
Rear	875 mm (34.45 in.)

General Specifications

Items	KVF750-A1, A6F ~, B1, B6F ~, C6F ~
Rim Size:	
Front	12 × 6.0
Rear	12 × 7.5
Front tire:	
Type	Tubeless
Size	AT25 × 8-12
Rear tire:	
Type	Tubeless
Size	AT25 × 10-2
Suspension:	
Front:	
Type	Double Wishbone
Wheel Travel	171 mm (6.73 in.)
Rear:	
Type	Double Wishbone
Wheel Travel	200 mm (7.87 in.)
Brake:	
Front	Disc × 2
Rear	Enclosed wet multi-plate
Parking Brake	Enclosed wet multi-plate
Electrical Equipment	
Battery	12 V 12 Ah
Headlight:	
Type	Semi-sealed beam
Bulb	12 V 40/40 W × 2
Tail/brake Light:	
Bulb	12 V 5/21 W
Reverse Light:	
Bulb	(EUR) 12 V 10 W
Alternator:	
Type	Three - phase AC
Rated Output	24.2 A, 14 V @6 000 r/min (rpm)

Specifications are subject to change without notice, and may not apply to every country.
EUR: Europe Model
US: United States Model

Unit Conversion Table

Prefixes for Units

Prefix	Symbol	Power
mega	M	× 1 000 000
kilo	k	× 1 000
centi	c	× 0.01
milli	m	× 0.001
micro	μ	× 0.000001

Units of Mass

kg	×	2.205	=	lb
g	×	0.03527	=	oz

Units of Volume

L	×	0.2642	=	gal (US)
L	×	0.2200	=	gal (imp)
L	×	1.057	=	qt (US)
L	×	0.8799	=	qt (imp)
L	×	2.113	=	pint (US)
L	×	1.816	=	pint (imp)
mL	×	0.03381	=	oz (US)
mL	×	0.02816	=	oz (imp)
mL	×	0.06102	=	cu in

Units of Force

N	×	0.1020	=	kg
N	×	0.2248	=	lb
kg	×	9.807	=	N
kg	×	2.205	=	lb

Units of Length

km	×	0.6214	=	mile
m	×	3.281	=	ft
mm	×	0.03937	=	in

Units of Torque

N·m	×	0.1020	=	kgf·m
N·m	×	0.7376	=	ft·lb
N·m	×	8.851	=	in·lb
kgf·m	×	9.807	=	N·m
kgf·m	×	7.233	=	ft·lb
kgf·m	×	86.80	=	in·lb

Units of Pressure

kPa	×	0.01020	=	kgf/cm²
kPa	×	0.1450	=	psi
kPa	×	0.7501	=	cmHg
kgf/cm²	×	98.07	=	kPa
kgf/cm²	×	14.22	=	psi
cmHg	×	1.333	=	kPa

Units of Speed

km/h	×	0.6214	=	mph

Units of Power

kW	×	1.360	=	PS
kW	×	1.341	=	HP
PS	×	0.7355	=	kW
PS	×	0.9863	=	HP

Units of Temperature

$$\frac{9(°C+40)}{5} - 40 = °F \qquad \frac{5(°F+40)}{9} - 40 = °C$$

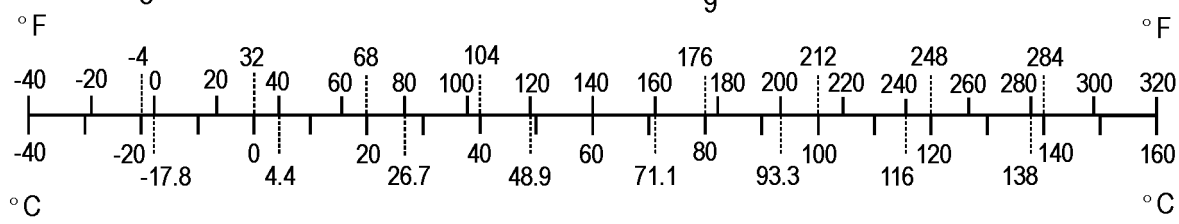

Periodic Maintenance

Table of Contents

Periodic Maintenance Chart

The scheduled maintenance must be done in accordance with this chart to keep the vehicle in good running condition. **The initial maintenance is vitally important and must not be neglected.**

FREQUENCY / OPERATION	First Service	Regular Service				
	After 10 hrs. or 100 km (60 mi.) of use	Every 10 days or 200 km (120 mi.) of use	Every 30 days or 600 km (360 mi.) of use	Every 90 days, 1 700 km (1 100 mi.) of use or when belt indicator light turns on (100 hrs of use) whichever comes first	Every year of use	See page
ENGINE						
Converter drive belt wear-inspect*				●		2-24
Converter drive belt deflection- inspect*				●		2-25
Converter drive belt failure detection system function-inspect*				●		2-38
Engine brake control lever-inspect*				●		2-27
Air cleaner-inspect*	●	●				2-16
Throttle lever play-inspect	●	●				2-14
Choke lever play-inspect	●	●				2-14
Idle speed-inspect			●			2-15
Valve clearance-inspect	First 1 700 km (1 100 mile); thereafter every 3 400 km					2-22
Fuel system cleanliness-inspect*	●			●		2-16
Engine oil-change*	●			●		2-27
Oil filter-replace*	●			●		2-28
Spark plug-clean and gap	●			●		2-37
Spark arrester-clean					●	2-24
Fuel hoses and connections-inspect				●		2-17
Fuel hose-replace	4 years					2-18
Radiator-clean*	●	●				2-19
Water hoses and connections-inspect*					●	2-19
Coolant-change*	2 years					2-20
CHASSIS						
Joint boots-inspect*	●	●				2-40
Rear brake pedal and lever play-inspect*	●	●				2-35
Rear brake plates-replace*	every 10 000 km (6 000 mi.)					2-35
Bolts and nuts-tighten	●	●				2-42
Front brake pad wear-inspect*	●		●			2-32
Brake light switch-inspect*	●		●			2-37
Steering-inspect	●			●		2-36

Periodic Maintenance Chart

FREQUENCY / OPERATION	First Service	Regular Service				
	After 10 hrs. or 100 km (60 mi.) of use	Every 10 days or 200 km (120 mi.) of use	Every 30 days or 600 km (360 mi.) of use	Every 90 days, 1 700 km (1 100 mi.) of use or when belt indicator light turns on (100 hrs of use) whichever comes first	Every year of use	See page
Differential control lever play-inspect	●	●				2-29
Tire wear-inspect*			●			2-28
Front and rear final gear case oil-change	●				●	2-30
Rear propeller shaft universal joint lubrication-perform*				●		2-32
General lubrication-perform*			●			2-41
Front brake fluid level-inspect	●		●			2-33
Front brake fluid-change					●	2-34
Front brake hoses and connections-inspect				●		2-32
Front brake master cylinder piston assembly and dust cover-replace	2 years					2-34
Front brake caliper fluid seal and dust seal-replace	2 years					2-35
Front brake hose-replace	4 years					2-33

*: Service more frequently when operated in mud, dust, or other harsh riding conditions, or when carrying heavy loads or pulling a trailer.

●: Clean, adjust, lubricate, torque, or replace parts as necessary.

Torque and Locking Agent

The following tables list the tightening torque for the major fasteners, and the parts requiring use of a non-permanent locking agent or liquid gasket.

Letters used in the “Remarks” column mean:
L: Apply a non-permanent locking agent.
LB: Apply a non-permanent locking agent (Three Bond TB2471, Blue).
Lh: Left-hand Threads
MO: Apply molybdenum disulfide oil (mixture of the engine oil and molybdenum disulfide grease in a weight ratio: 10 : 1).
R: Replacement Parts
S: Follow the specific tightening sequence.
SS: Apply silicone sealant (Kawasaki Bond: 56019-120).
St: Stake the fasteners to prevent loosening.

Fastener	Torque			Remarks
	N·m	kgf·m	ft·lb	
Fuel System				
Idle Adjusting Screw Bracket Bolt	8.8	0.90	78 in·lb	
Element Cover Screw	3.5	0.35	31 in·lb	
Element Holder Screws	3.5	0.35	31 in·lb	
Clamp Bracket Bolt	9.8	1.0	87 in·lb	
Fuel Pump Mounting Nuts	7.8	0.80	69 in·lb	
Fuel Tap Plate Screws	0.8	0.08	7 in·lb	
Fuel Tap Mounting Bolts	4.9	0.50	43 in·lb	
Fuel Tap Cover Screws	9.8	1.0	87 in·lb	
Fuel Tap Bracket Bolts	7.8	0.80	69 in·lb	
Fuel Level Sensor Mounting Bolts	2.0	0.20	18 in·lb	
Cooling System				
Radiator Mounting Bolts	8.8	0.90	78 in·lb	
Radiator Fan Switch	18	1.8	13	
Radiator Fan Assembly Bolts	4.9	0.50	43 in·lb	
Thermostat Housing Cover Bolts	8.8	0.90	78 in·lb	
Water Temperature Switch	7.8	0.80	69 in·lb	SS
Air Bleeder Bolt	8.8	0.90	78 in·lb	
Water Pump Cover Bolts	8.8	0.90	78 in·lb	
Coolant Drain Plug	8.8	0.90	78 in·lb	
Water Pump Impeller	7.8	0.80	69 in·lb	
Water Pipe Mounting Bolts	8.8	0.90	78 in·lb	
Engine Top End				
Rocker Case Bolts 55 mm (2.2 in.)	8.8	0.90	78 in·lb	S
Rocker Case Bolts 130 mm (5.1 in.)	9.8	1.0	87 in·lb	S
Rocker Case Bolts 30 mm (1.2 in.)	9.8	1.0	87 in·lb	S
Rocker Case Bolts 25 mm (1.0 in.)	9.8	1.0	87 in·lb	S
Cylinder Head Bolts (M10), first torque	25	2.5	18	S, MO
Cylinder Head Bolts (M10), final torque	49	5.0	36	S
Cylinder Head Bolts (M6)	9.8	1.0	87 in·lb	
Valve Adjusting Cap Bolts	8.8	0.90	78 in·lb	
Water Pipe Mounting Bolts	8.8	0.90	78 in·lb	

Torque and Locking Agent

Fastener	Torque			Remarks
	N·m	kgf·m	ft·lb	
Rocker Shaft Bolts	22	2.2	16	
Valve Adjusting Screw Locknuts	12	1.2	104 in·lb	
Chain Tensioner Mounting Bolts	8.8	0.90	78 in·lb	
Chain Tensioner Cap Bolt	22	2.2	16	
Position Plate Bolts	8.8	0.90	78 in·lb	
Intermediate Shaft Chain Guide Bolts	8.8	0.90	78 in·lb	
Intermediate Shaft Chain Tensioner Bolts	8.8	0.90	78 in·lb	
Camshaft Sprocket Bolts	12	1.2	104 in·lb	L
Cylinder Bolts 40 mm (1.6 in.)	9.8	1.0	87 in·lb	
Cylinder Bolts 30 mm (1.2 in.)	9.8	1.0	87 in·lb	
Front Cylinder Camshaft Chain Guide Bolt	20	2.0	14	
Rear Cylinder Camshaft Chain Guide Bolt	20	2.0	14	
Exhaust Pipe Cover Bolts	8.8	0.90	78 in·lb	
Exhaust Pipe Holder Nuts	17	1.7	13	
Muffler Clamp Bolt	8.8	0.90	78 in·lb	
Muffler Mounting Nuts	20	2.0	14	S
Muffler Mounting Locknuts	31	3.2	23	S
Muffler Cover Bolts	8.8	0.90	78 in·lb	
Converter System				
Drive Pulley Bolt	93	9.5	69	R, Lh
Driven Pulley Nut	93	9.5	69	
Drive Pulley Cover Bolt	13	1.3	113 in·lb	
Ramp Weight Nuts	6.9	0.70	61 in·lb	
Spider	275	28	203	Lh
Joint Duct Bolts	8.8	0.90	78 in·lb	
Torque Converter Cover Bolts	8.8	0.90	78 in·lb	S
Engine Brake Actuator Mounting Bolts	8.8	0.90	78 in·lb	S
Recoil Starter				
Recoil Starter Mounting Bolts	5.9	0.60	52 in·lb	L
Engine Lubrication System				
Oil Filter	18	1.8	13	R
Oil Pressure Switch	15	1.5	11	SS
Oil Pipe Bolts	8.8	0.90	78 in·lb	
Engine Oil Drain Plug	20	2.0	14	
Oil Pressure Relief Valve	15	1.5	11	L
Oil Pump Bolts	8.8	0.90	78 in·lb	
Chain Guide Bolts	8.8	0.90	78 in·lb	
Oil Pump Drive Chain Tensioner Bolt	25	2.5	18	
Oil Filter Mounting Bolts	25	2.5	18	L (15 mm)
Oil Pressure Switch Terminal Bolt	1.5	0.15	13 in·lb	
Engine Removal/Installation				
Engine Mounting Bracket Bolts	72	7.3	53	
Engine Mounting Bolt	62	6.3	46	L

Torque and Locking Agent

Fastener	Torque			Remarks
	N·m	kgf·m	ft·lb	
Engine Mounting Nut	62	6.3	46	
Crankshaft/Transmission				
Connecting Rod Big End Cap Nuts	34	3.5	25	MO
Engine Oil Drain Plug	20	2.0	14	
Crankcase Bolts (M8) 75 mm (2.95 in.)	20	2.0	14	S
Crankcase Bolts (M8) 110 mm (4.33 in.)	20	2.0	14	S
Crankcase Bolt (M8) 110 mm (4.33 in.)	20	2.0	14	S, L (1)
Crankcase Bolts (M6) 40 mm (1.57 in.)	9.8	1.0	87 in·lb	
Crankcase Bolts (M6) 65 mm (2.56 in.)	9.8	1.0	87 in·lb	
Bearing Position Plate Screws	4.9	0.50	43 in·lb	L
Rear Cylinder Camshaft Chain Guide Bolt	20	2.0	14	
Grip Hold Nut	9.8	1.0	87 in·lb	
Shift Lever Assembly Bracket Bolts	20	2.0	14	
Tie-rod End Front Locknut	9.8	1.0	87 in·lb	Lh
Tie-Rod End Rear Locknut	9.8	1.0	87 in·lb	
Tie-rod End Nut	20	2.0	14	
Shift Lever Assembly Nut	20	2.0	14	
Shift Lever Clamp Bolt	14	1.4	10	
Tie-rod End Bolt	9.8	1.0	87 in·lb	
Shift Shaft Positioning Bolt	25	2.5	18	
Shift Shaft Spring Bolt	25	2.5	18	L
Shift Shaft Cover Bolts	8.8	0.90	78 in·lb	
Tie-rod End Locknut	20	2.0	14	
Neutral Position Switch	15	1.5	11	
Reverse Position Switch	15	1.5	11	
Wheel/Tires				
Tie-rod Locknuts	37	3.8	27	
Wheel Nuts (First Torque)	15	1.5	11	S
Wheel Nuts (Final Torque)	76	7.8	56	S
Front Axle Nuts	197	20	145	
Rear Axle Nuts	265	27	195	
Final Drive				
(Output Bevel Gears)				
Belt Converter Cover Plate Bolts	8.8	0.90	78 in·lb	
Output Driven Bevel Gear Housing Bolts	26	2.7	20	
Output Drive Bevel Gear Housing Bolts	26	2.7	20	
Bearing Holder	137	14	101	L
Bevel Gear Holder Nut	157	16	116	L
Bearing Holder	118	12	87	L
Output Shaft Holder Nut	157	16	116	L
Rotor Mounting Bolts	12	1.2	104 in·lb	
Output Drive Bevel Gear Cover Bolts	8.8	0.90	78 in·lb	
Forward/Reverse Detecting Sensor Mounting Bolt	15	1.5	11	

Torque and Locking Agent

Fastener	Torque			Remarks
	N·m	kgf·m	ft·lb	
(Front Final Gear Case)				
Variable Differential Control Shift Shaft Lever Bolt	8.8	0.90	78 in·lb	
Front Final Gear Case Left Cover Bolts (M6)	9.8	1.0	87 in·lb	L
Ring Gear Bolts	57	5.8	42	LB
Front Final Gear Case Center Cover Bolts (M6)	9.8	1.0	87 in·lb	L
Front Final Gear Case Center Cover Bolts (M8)	24	2.4	17	L
Front Final Gear Case Oil Filler Cap	29	3.0	22	
Pinion Gear Bearing Holder Nut	127	13	94	St
Pinion Gear Bearing Holder	137	14	101	L
Front Final Gear Case Coupling Nut	25	2.5	18	
Front Final Gear Case Oil Drain Plug	15	1.5	11	
2WD/4WD Actuator Mounting Bolts	9.8	1.0	87 in·lb	L, S
Variable Differential Control Cable Locknut	17	1.7	12	
Variable Differential Control Lever Bolt	–	–	–	L
Front Final Gear Case Nuts	59	6.0	43	
(Rear Final Gear Case)				
Rear Final Gear Case Front Cover Bolts	24	2.4	17	
Rear Final Gear Case Gasket Screws	1.3	0.13	12 in·lb	L
Pinion Gear Bearing Holder Nut	157	16	116	L
Pinion Gear Bearing Holder	137	14	101	L
Rear Final Gear Case Right Cover Bolts (M12)	93	9.5	69	L
Rear Final Gear Case Right Cover Bolts (M10)	49	5.0	36	L
Rear Final Gear Case Right Cover Bolts (M8)	24	2.4	17	L
Rear Final Gear Case Oil Filler Cap	29	3.0	22	
Rear Final Gear Case Oil Drain Plug	15	1.5	11	
Rear Final Gear Case Bracket Bolts	59	6.0	43	
Rear Final Gear Case Nuts	91	9.3	67	
Brakes				
Reservoir Cap Screws	1.5	0.15	13 in·lb	
Front Brake Lever Pivot Bolt	6.0	0.61	53 in·lb	
Front Brake Lever Pivot Bolt Locknut	6.0	0.61	53 in·lb	
Front Brake Master Cylinder Clamp Bolts	9.0	0.92	80 in·lb	S
Front Bake Hose Banjo Bolt	25	2.5	18	
Front Brake Caliper Mounting Bolts	25	2.5	18	
Bleed Valves	7.8	0.80	69 in·lb	
Front Brake Disc Mounting Bolts	37	3.8	27	L
Front Brake Caliper Holder Shaft	17	1.7	13	
Front Brake Pad Mounting Bolts	17	1.7	13	
Front Brake Light Switch Mounting Screw	1.2	0.12	10 in·lb	
Variable Differential Control Lever Bolt	–	–	–	L
Rear Final Gear Case Gasket Screws	1.3	0.13	12 in·lb	L
Suspension				
Front Shock Absorber Mounting Nuts	34	3.5	25	

Torque and Locking Agent

Fastener	Torque			Remarks
	N·m	kgf·m	ft·lb	
Front Suspension Arm Pivot Nuts	42	4.3	31	
Steering Knuckle Joint Nuts	29	3.0	22	
Rear Shock Absorber Mounting Nuts	34	3.5	25	
Stabilizer Holder Bolts	23	2.3	17	
Stabilizer Joint Nuts	48	4.9	35	
Rear Suspension Arm Pivot Nuts	48	4.9	35	
Rear Knuckle Mounting Nuts	48	4.9	35	
Steering				
Handlebar Holder Bolts	29	3.0	22	S
Steering Stem Clamp Bolts	25	2.5	18	
Tie-rod End Nuts	42	4.3	31	
Tie-rod Locknuts	37	3.8	27	
Steering Stem Bearing Joint Bolts	23	2.3	17	L
Steering Stem Bottom End Nut	62	6.3	46	
Steering Knuckle Joint Nuts	29	3.0	22	
Front Brake Master Cylinder Clamp Bolts	9.0	0.92	80 in·lb	
Variable Differential Control Lever Bolt	–	–	–	L
Frame				
Front Guard Bolts	37	3.8	27	
Front Carrier Bolts, L = 50 mm (2.0 in.)	25	2.5	18	
Front Carrier Bolts, L = 70 mm (2.8 in.)	25	2.5	18	
Front Carrier Bracket Bolts	32	3.3	24	L
Rear Carrier Bolts, L = 14 mm (0.6 in.)	54	5.5	40	L
Rear Carrier Bolts, L = 41 mm (1.6 in.)	54	5.5	40	L
Rear Carrier Bracket Bolts	47	4.8	35	
Footboard Bracket Bolts	47	4.8	35	
Hitch Bracket Bolts	82	8.3	60	
Rear Final Gear Case Mounting Bracket Bolts	–	–	–	L
Electrical System				
Starter Motor Mounting Bolts	8.8	0.90	78 in·lb	
Starter Motor Cable Mounting Nut (KVF750-A1, B1, A6F, B6F, C6F)	4.9	0.50	43 in·lb	
Starter Motor Cable Mounting Nut	6.9	0.70	61 in·lb	
Starter Motor Terminal Nut	6.9	0.70	61 in·lb	
Starter Motor Bolts	4.9	0.50	43 in·lb	
Starter Motor Clutch Bolts	34	3.5	25	L
Alternator Stator Bolts	13	1.3	113 in·lb	
Crankshaft Sensor Mounting Bolts	5.9	0.60	52 in·lb	
Alternator Cover Plugs	18	1.8	13	
Alternator Rotor Bolt	127	13	94	
Alternator Cover Bolts	8.8	0.90	78 in·lb	
Spark Plugs	13	1.3	113 in·lb	
2WD/4WD Actuator Mounting Bolts	9.8	1.0	87 in·lb	L, S

Torque and Locking Agent

Fastener	Torque			Remarks
	N·m	kgf·m	ft·lb	
Engine Brake Actuator Mounting Bolts	8.8	0.90	78 in·lb	
Forward/Reverse Detecting Sensor Mounting Bolt	15	1.5	11	
Speed Sensor Mounting Bolt	8.8	0.90	78 in·lb	
Neutral Position Switch	15	1.5	11	
Reverse Position Switch	15	1.5	11	
Ignition Coil Mounting Bolts	6.9	0.70	61 in·lb	
Radiator Fan Switch	18	1.8	13	
Water Temperature Switch	6.9	0.70	61 in·lb	SS
Oil Pressure Switch	15	1.5	11	SS
Oil Pressure Switch Terminal Bolt	1.5	0.15	13 in·lb	
Regulator/Rectifier Mounting Bolts	8.8	0.90	78 in·lb	
Fuel Level Sensor Mounting Bolts	2.0	0.20	18 in·lb	

The tables below, relating tightening torque to thread diameter, lists the basic torque for the bolts and nuts. Use this table for only the bolts and nuts which do not require a specific torque value. All of the values are for use with dry solvent-cleaned threads.

Basic Torque for General Fasteners of Engine Parts

Threads dia. mm (in.)	Mark of bolt head	Torque		
		N·m	kgf·m	ft·lb
5 (0.20)	4T	2.2 ~ 2.6	0.22 ~ 0.27	19 ~ 23 in·lb
6 (0.24)	9T	12 ~ 15	1.2 ~ 1.5	104 ~ 130 in·lb
6 (0.24)	7T	7.8 ~ 9.8	0.8 ~ 1.0	69 ~ 87 in·lb
6 (0.24)	4T	3.9 ~ 4.9	0.4 ~ 0.5	35 ~ 43 in·lb
8 (0.31)	7T	18 ~ 22	1.8 ~ 2.2	13 ~ 16
8 (0.31)	4T	10 ~ 14	1.0 ~ 1.4	87 ~ 122 in·lb
10 (0.39)	7T	39 ~ 44	4.0 ~ 4.5	29 ~ 33
10 (0.39)	4T	20 ~ 24	2.0 ~ 2.4	14 ~ 17

Basic Torque for General Fasteners of Frame Parts

Threads dia. mm (in.)	Torque		
	N·m	kgf·m	ft·lb
5 (0.20)	3.4 ~ 4.9	0.35 ~ 0.5	30 ~ 43 in·lb
6 (0.24)	5.9 ~ 7.8	0.6 ~ 0.8	52 ~ 69 in·lb
8 (0.31)	14 ~ 19	1.4 ~ 1.9	10.0 ~ 13.5
10 (0.39)	25 ~ 34	2.6 ~ 3.5	19.0 ~ 25
12 (0.47)	44 ~ 61	4.5 ~ 6.2	33 ~ 45
14 (0.55)	73 ~ 98	7.4 ~ 10.0	54 ~ 72
16 (0.63)	115 ~ 155	11.5 ~ 16.0	83 ~ 115
18 (0.71)	165 ~ 225	17.0 ~ 23.0	125 ~ 165
20 (0.79)	225 ~ 325	23 ~ 33	165 ~ 240

Specifications

Item	Standard	Service Limit
Fuel System		
Throttle Lever Free Play	2 ~ 3 mm (0.08 ~ 0.12 in.)	– – –
Choke Lever Free Play	about 3 mm (0.12 in.)	– – –
Idle Speed	1 150 ±50 r/min (rpm)	– – –
Air Cleaner Element Oil	High-quality foam air filter oil	– – –
Cooling System		
Coolant:		
Type (Recommended)	Permanent type antifreeze	– – –
Color	Green	– – –
Mixed Ratio	Soft water 50%, Coolant 50%	– – –
Freezing Point	−35°C (−31°F)	– – –
Total Amount	2.2 L (2.3 US qt.)	– – –
Engine Top End		
Valve Clearance:		
Exhaust	0.20 ~ 0.25 mm (0.0079 ~ 0.0098 in.)	– – –
Inlet	0.10 ~ 0.15 mm (0.0039 ~ 0.0059 in.)	– – –
Converter System		
Belt Width	29.7 ~ 30.3 mm (1.169 ~ 1.193 in.)	28.0 mm (1.102 in.)
Belt Deflection	22 ~ 27 mm (0.87 ~ 1.06 in.)	– – –
Actuator Lever Guide Shoe Wear	– – –	6 mm (0.24 in.)
Engine Lubrication System		
Engine Oil:		
Type	API SF or SG	– – –
	API SH, SJ or SL with JASO MA	– – –
Viscosity	SAE10W-40	– – –
Capacity	2.1 L (2.2 US qt) (When filter is not removed)	– – –
	2.2 L (2.3 US qt) (When filter is removed)	– – –
	2.6 L (2.7 US qt) (When engine is completely dry)	– – –
Wheels/Tires		
Tire Tread Depth:		
Front	13.0 mm (0.51 in.)	3 mm (0.12 in.)
Rear	14.5 mm (0.57 in.)	4 mm (0.16 in.)
Standard tire:		
Front	AT 25 × 8-12	– – –
	DUNLOP, KT191, Tubeless	– – –
Rear	AT 25 × 10-12	– – –
	DUNLOP, KT195, Tubeless	– – –

Specifications

Item	Standard	Service Limit
Final Drive		
Front Final Gear Case:		
Gear Case Oil:		
Type	API SF or SG	– – –
	API SH, SJ or SL with JASO MA	– – –
Viscosity	SAE 10W-40	– – –
Oil Level	Filler opening bottom	– – –
Capacity	0.40 L (0.42 US qt)	– – –
Rear Final Gear Case:		
Gear Case Oil:		
Type	MOBIL Fluid 424, CITGO TRANSGARD TRACTOR HYDRAULIC FLUID, or EXXON HYDRAUL 560	– – –
Oil Level	Filler opening bottom	– – –
Capacity	0.72 L (0.76 US qt)	– – –
Brakes		
Front Brake Fluid:		
Type	DOT 3 or DOT 4	– – –
Front Disc Brake:		
Pad Lining Thickness	4 mm (0.16 in.)	1 mm (0.04 in.)
Rear Brake Lever, Pedal and Cables:		
Rear Brake Lever Free Play	1 ~ 2 mm (0.04 ~ 0.08 in.)	– – –
Brake Pedal Free Play	15 ~ 25 mm (0.6 ~ 1.0 in.)	– – –
Electrical System		
Spark Plug Gap	0.7 ~ 0.8 mm (0.028 ~ 0.032 in.)	– – –
Rear Brake Light Switch Timing	ON after 10 mm (0.4 in.) of pedal travel	– – –

Special Tools

Oil Filter Wrench:
57001-1249

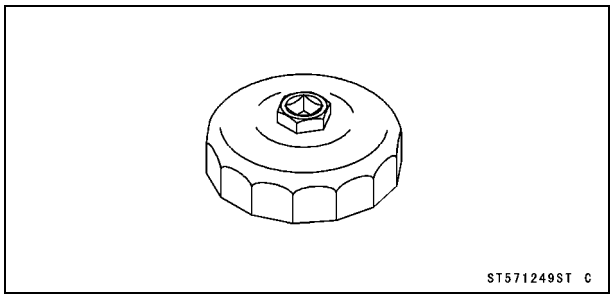

Pulley Holder Attachment:
57001-1472

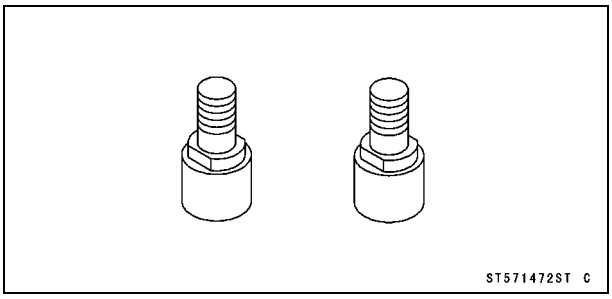

Carburetor Drain Plug Wrench, Hex 3:
57001-1269

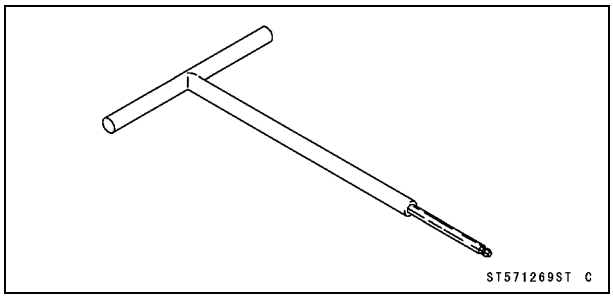

Flywheel & Pulley Holder:
57001-1605

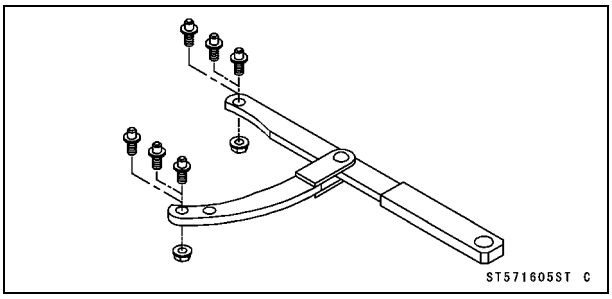

Filler Cap Driver:
57001-1454

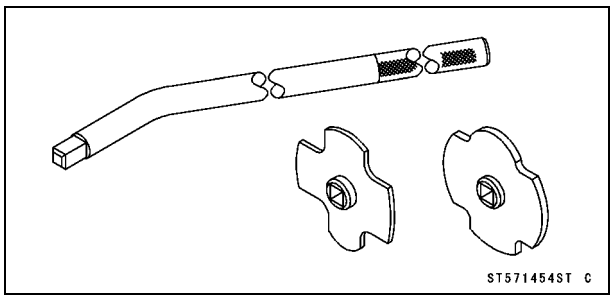

Belt Measuring Gauge:
57001-1646

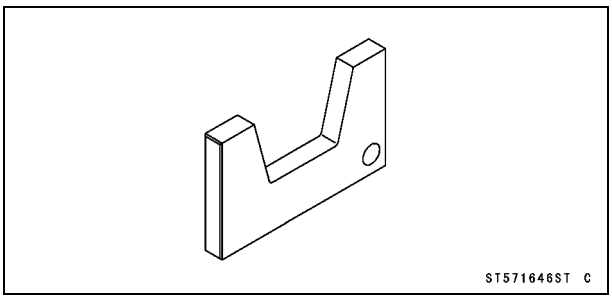

Fuel System

Throttle Lever Free Play Inspection

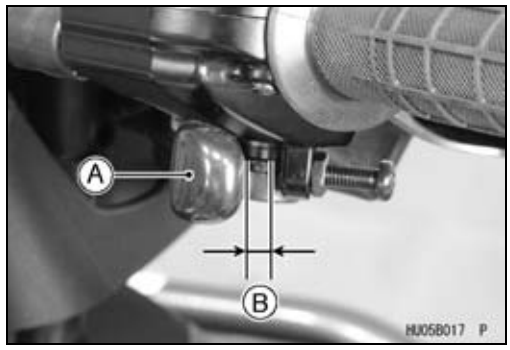

- Check that the throttle lever [A] moves smoothly from full open to close, and the throttle closes quickly and completely in all steering positions by the return spring.

★If the throttle lever does not return properly, check the throttle cable routing, lever free play, and cable damage. Then lubricate the throttle cable.

- Run the engine at the idle speed, and turn the handlebar all the way to the right and left to ensure that the idle speed does not change.

★If the idle speed increases, check the throttle lever free play and the cable routing.

- Stop the engine and check the throttle lever free play [B].

★If the free play is not within the specified range, adjust the cable.

Throttle Lever Free Play
Standard: 2 ~ 3 mm (0.08 ~ 0.12 in.)

Throttle Lever Free Play Adjustment

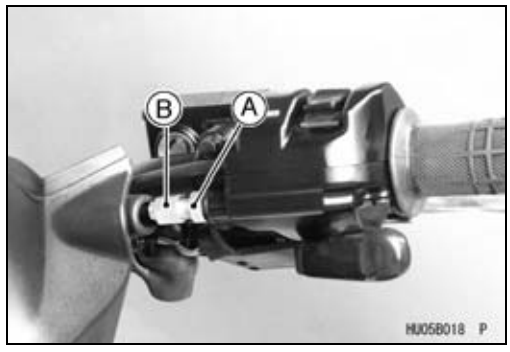

- Remove the handlebar cover (see Multifunction Meter Unit Removal in the Electrical System chapter).
- Slide the rubber cover off the adjuster at the throttle case.
- Loosen the locknut [A] and turn the throttle cable upper adjuster [B] until the cable has proper amount of play.
- Tighten the locknut and reinstall the rubber cover.

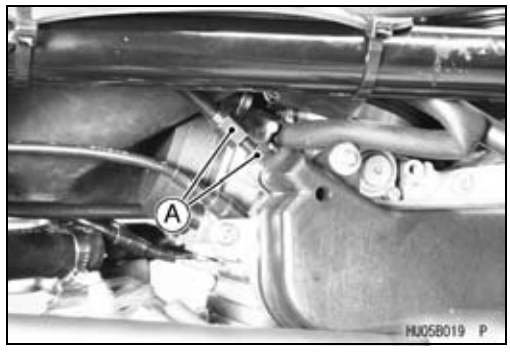

★If the free play cannot be adjusted by using the upper cable adjuster, remove the left side cover (see Left Side Cover Removal in the Frame chapter) and then use the cable adjusting nuts [A] at the lower end of the throttle cable and make the necessary free play.

Choke Lever Free Play Inspection

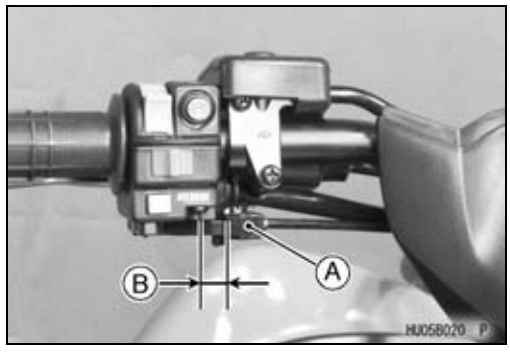

- Check if the choke lever [A] returns properly and if the inner cable slides smoothly.
- Make sure that the choke lever returns to its released position all the way.
- To determine the amount of choke cable play at the lever, pull the choke lever to the left until it feels that the operation of lever is tough; the amount of choke lever is equivalent to that of cable play.
- The proper amount [B] of play ranges about 3 mm (0.12 in.) at the choke lever.

★If the free play is not within the specified range, adjust the cable.

Choke Lever Free Play
Standard: about 3 mm (0.12 in.)

Periodic Maintenance Procedures

Choke Lever Free Play Adjustment

- Remove:
  Handlebar Cover Screws [A]

- Remove:
  Handlebar Cover Screws [A]
  Handlebar Cover Front [B]

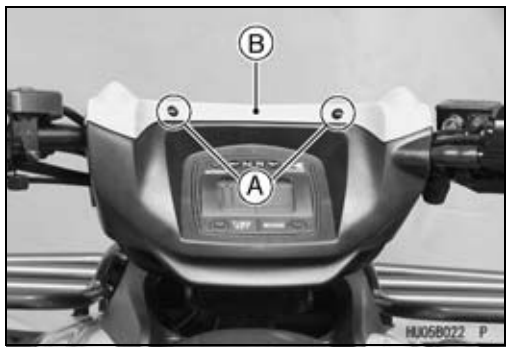

- Loosen the locknut [A] of the choke cable.
- Turn the adjuster [B] until the cable has proper amount of play.
- Tighten the locknut securely.

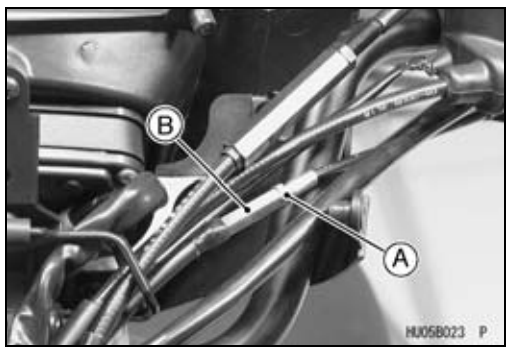

Idle Speed Inspection

- Start the engine and warm it up thoroughly.
- With the engine idling, turn the handlebar to both sides to check for any changes in the idle speed.

★If handlebar movement changes the idle speed, the throttle cable may be improperly adjusted, incorrectly routed, or damaged. Be sure to correct any of these conditions before riding.

⚠ WARNING

Operation with improperly adjusted, incorrectly routed, or damaged cables could result in an unsafe riding condition.

- Check idle speed with a suitable tachometer.

★If the idle speed is out of the specified range, adjust it (see Idle Speed Adjustment).

Idle Speed
Standard: 1 150 ±50 r/min (rpm)

Periodic Maintenance Procedures

Idle Speed Adjustment

- Start the engine and warm it up thoroughly.
- Turn the idle adjusting screw [A] until the idle speed is correct.

○Open and close the throttle a few times to make sure that the idle speed is within the specified range.

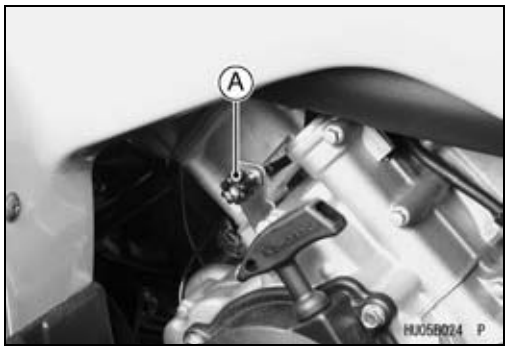

Fuel System Cleanliness Inspection

⚠ WARNING

Gasoline is extremely flammable and can be explosive under certain conditions. Turn the ignition switch OFF. Do not smoke. Make sure the area is well-ventilated and free from any source of flame or sparks; this includes any appliance with a pilot light.

- Remove the check valve [A] at the end of the carburetor overflow hose [B].
- Run the lower end of the carburetor overflow hose to a suitable container.

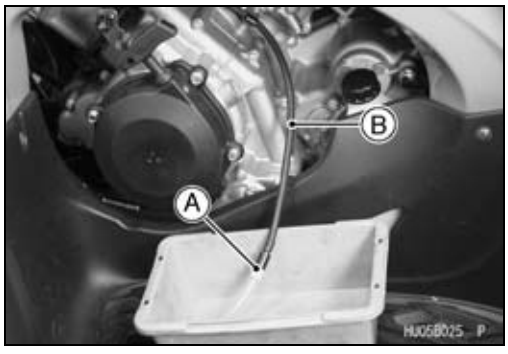

- Turn out the carburetor drain plugs [A] a few turns and drain the fuel.

Special Tool - Carburetor Drain Plug Wrench, Hex 3 [B] : 57001-1269

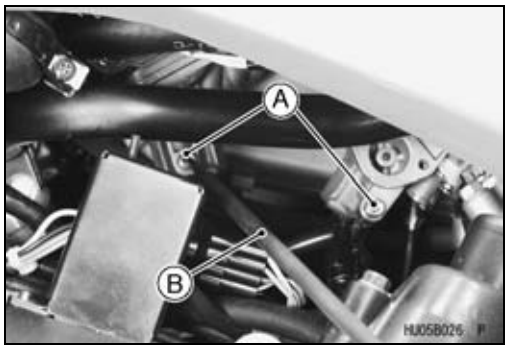

- Check to see if water or dirt comes out.
- Tighten the drain plugs.

★If any water or dirt appears during the above inspection, clean the fuel system (carburetor, fuel pump, fuel tank, fuel hose).

Air Cleaner Element Cleaning and Inspection

NOTE

○*In dusty areas, the element should be cleaned more frequently than the recommended interval.*

○*After riding through rain or muddy terrains, the element should be cleaned immediately.*

○*Also, if there is a break in the element material or any other damage to the element, replace the element with a new one.*

Periodic Maintenance Procedures

⚠ WARNING

Clean the element in a well-ventilated area, and take care that there are no sparks or flame anywhere near the working area; this includes any appliance with a pilot light. Because of the danger of highly flammable liquids, do not use gasoline or a low-flash point solvent to clean the foam element.

- Remove the air cleaner element (see Air Cleaner Element Removal in the Fuel System chapter).
- Clean the element [A] in a bath of high-flash point solvent.

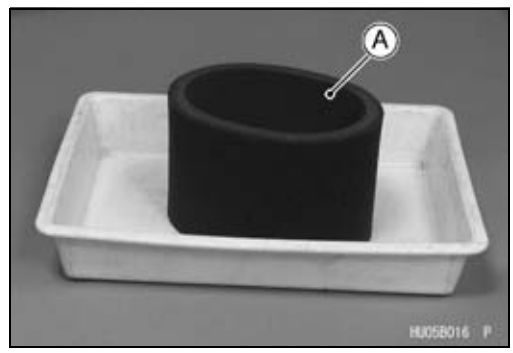

- Squeeze it dry in a clean towel [A]. Do not wring the element or blow it dry; the element can be damaged.
- Inspect the element for damage.

★If it is torn, punctured, or hardened, replace it.

- After cleaning, saturate the element with a high-quality foam-air-filter oil, squeeze out the excess oil, then wrap it in a clean rag and squeeze it as dry as possible. Be careful not to tear the element.

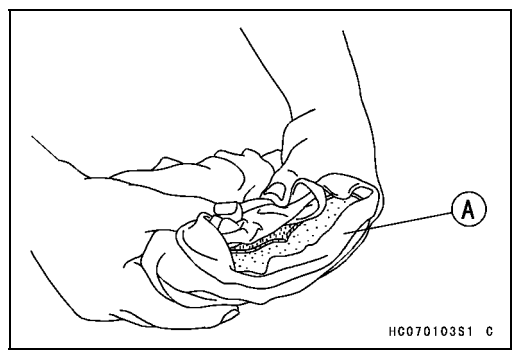

Air Cleaner Draining

- If any water or oil accumulates in the tube, drain it by taking off the tube plug [A]. After draining, be sure to install the tube plug and clamp firmly.

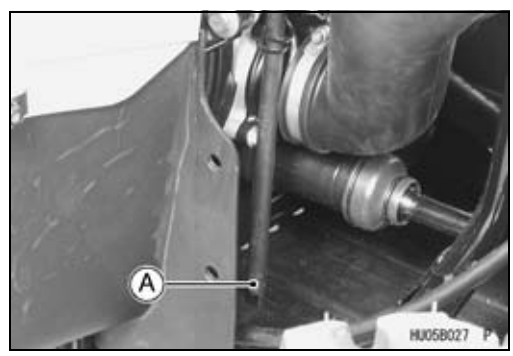

Fuel Hoses and Connections Inspection

○The fuel hoses are designed to be used throughout the vehicle life without any maintenance, however, if the vehicle is not properly handled, the pressure inside the fuel line can cause fuel to leak [A] or the hose to burst. Check the fuel hose.

★Replace the fuel hose if any fraying, cracks [B] or bulges [C] are noticed.

- Check that the hoses are securely connected and clamps are installed correctly.

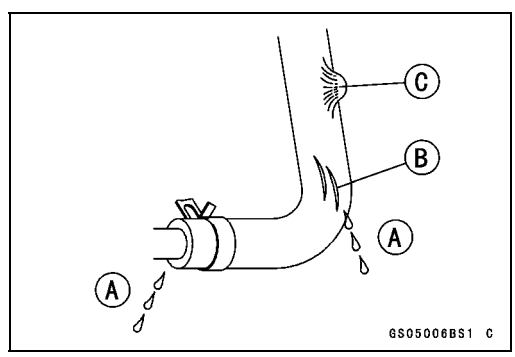

- When installing the fuel hoses, route the hoses according to Cable, Wire, and Hose Routing section in the Appendix chapter.
- When installing the fuel hoses, avoid sharp bending, kinking, flattening or twisting, and route the fuel hoses with a minimum of bending so that the fuel flow will not be obstructed.

★Replace the hose if it has been sharply bent or kinked.

- Fit the fuel hose [A] onto the fitting fully and install the plate clamp [B] beyond the raised rib [C].
  1 ~ 2 mm (0.0039 ~ 0.0078 in.) [D]

○The hose end must reach the fillet [E] or be as near as possible to the step [F].

○Fit the fuel pump inlet hoses onto the Y-joint fully until each end of the inlet hose touches the second raised rib.

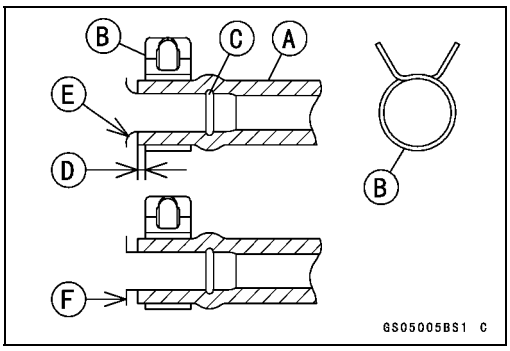

Fuel Hose Replacement

⚠ WARNING

Gasoline is extremely flammable and can be explosive under certain conditions. Turn the ignition switch OFF. Do not smoke. Make sure the area is well ventilated and free from any source of flame or sparks; this includes any appliance with a pilot light.

- Remove:
  Right Side Cover (see Right Side Cover Removal in the Frame chapter)
  Electric Parts Case (see Electric Parts Case Removal in the Frame chapter)
  Rear Fender (see Rear Fender Removal in the Frame chapter)
- Turn the fuel tap to the ON position.

- Remove:
  Clamps [A]
  Fuel Hoses [B]
- Replace the fuel hoses with new ones.
- When installing the fuel hose, route the hose according to Cable, Wire, and Hose Routing section in Appendix chapter.
- When installing the fuel hose, avoid sharp bending, kinking, flattening or twisting, and route the fuel hose with a minimum of bending so that the fuel flow will not be obstructed.

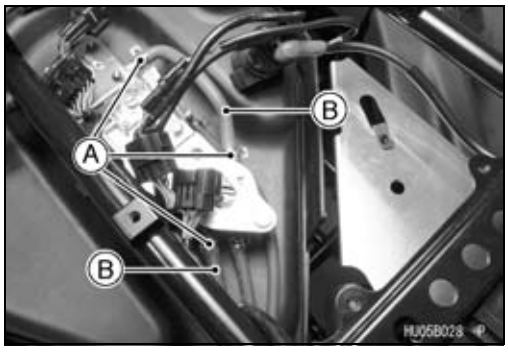

Periodic Maintenance Procedures

- Fit the fuel hose [B] onto the pipe fully and install the clamps beyond the raised rib (see Fuel Hose and Connection Inspection).

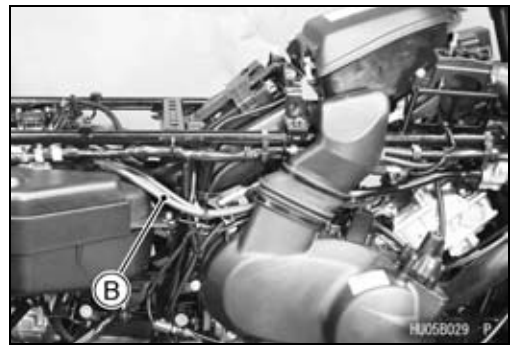

Cooling System

Radiator Cleaning

CAUTION

Clean the radiator screen and the radiator in accordance with the Periodic Maintenance Chart. In dusty areas, they should be cleaned more frequently than the recommended interval. After riding through muddy terrains, the radiator screen and the radiator should be cleaned immediately.

- Remove:
  Front Guard (see Front Guard Removal in the Frame chapter)
  Front Fender (see Front Fender Removal in the Frame chapter)
  Radiator Screen Mounting Screws [A]
  Radiator Screen [B]
- Clean the radiator screen in a bath of tap water, and then dry it with compressed air or by shaking it.

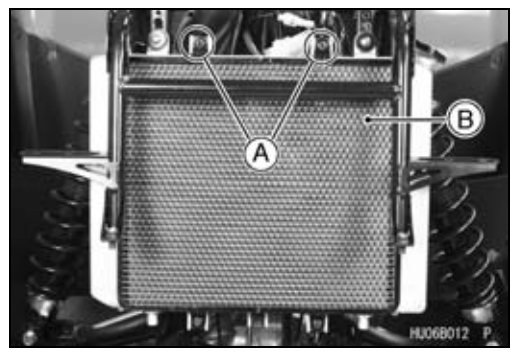

- Clean the radiator.

CAUTION

When cleaning the radiator with steam cleaner, be careful of the following to prevent radiator damage.
Keep the steam gun [A] away more than 0.5 m (20 in.) [B] from the radiator core.
Hold the steam gun perpendicular [C] (not oblique [D]) to the core surface.
Run the steam gun following the core fin direction.

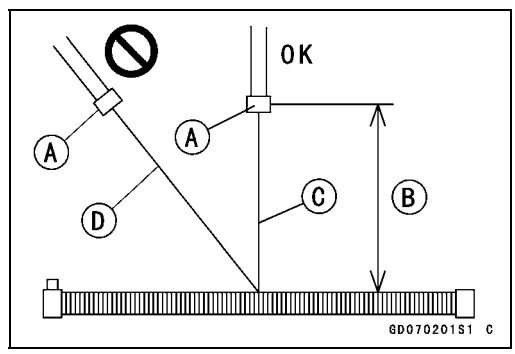

Water Hoses and Connections Inspection

○The high pressure inside the water hose can cause coolant to leak [A] or the hose to burst if the line is not properly maintained. Visually inspect the hoses for signs of deterioration. Squeeze the hoses. A hose should not be hard and brittle, nor should it be soft or swollen.

★Replace the hose if any fraying, cracks [B] or bulges [C] are noticed.

- Check that the hoses are securely connected and clamps are tightened correctly.

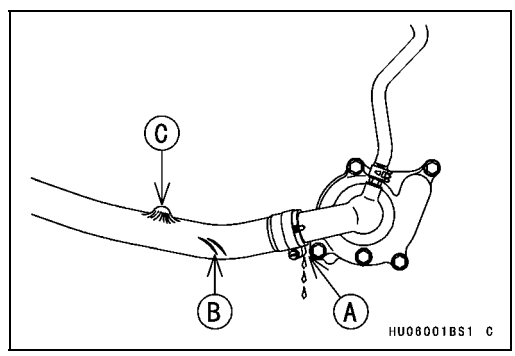

Periodic Maintenance Procedures

Coolant Change

⚠ WARNING

To avoid burns, do not remove the radiator cap or try to change the coolant when the engine is still hot. Wait until it cools down.
Coolant on tires will make them slippery and can cause an accident and injury. Immediately wash away any coolant that spills on the frame, engine, or wheels.
Since coolant is harmful to the human body, do not use for drinking.

- Remove:
  Left Footboard (see Left Footboard Removal in the Frame chapter)
  Front Fender (see Front Fender Removal in the Frame chapter)
  Radiator Cover Screws [A] and Collars

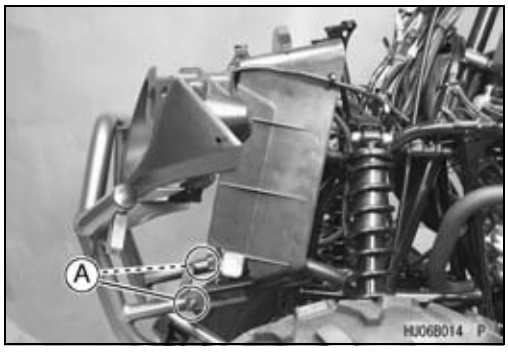

- Remove:
  Radiator Cover Screws [A] and Collars
  Radiator Cover [B]

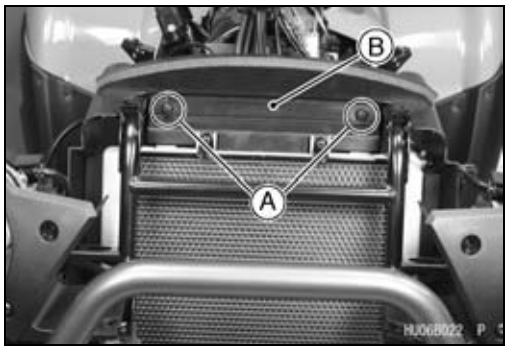

- Remove:
  Clamp [A]
  Reserve Tank Screws [B]
  Reserve Tank [C] with Hose
- Remove the reserve tank cap, and pour the coolant into a container.

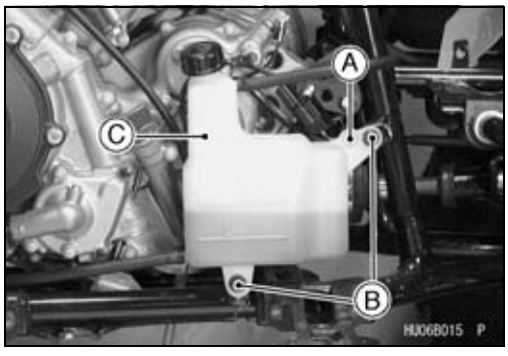

Periodic Maintenance Procedures

- Place a container under the drain plug [A] at the bottom of the water pump [B], then remove the drain plug.

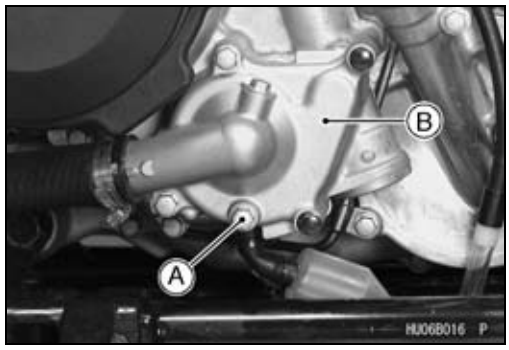

- Remove the radiator cap [A] in two steps. First turn the cap counterclockwise to the first step. Then push and turn it further in the same direction and remove the cap.
- The coolant will drain from the radiator and engine.

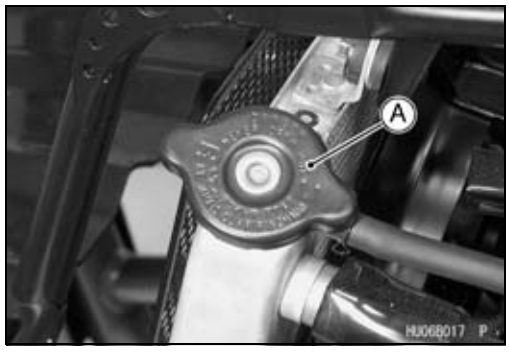

- Place a container under the drain plug [A] at the front cylinder, then remove the drain plug.

- Place a container under the drain plug [A] at the rear cylinder, then remove the drain plug.

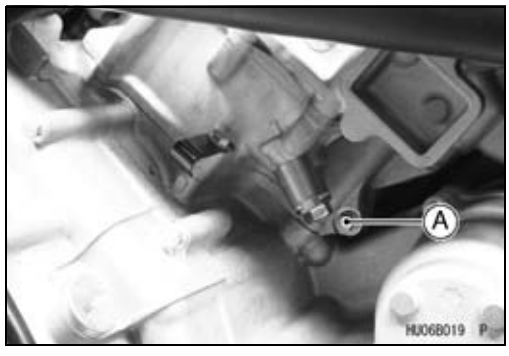

- Tighten the drain plug.

  Torque - Coolant Drain Plug: 8.8 N·m (0.90 kgf·m, 78 in·lb)
- Support the vehicle on a stand or the jack so that the front wheels are off the ground. This makes air bleeding easier.
- Fill the radiator up to the radiator filler neck [A] with coolant.

NOTE

○*Pour in the coolant slowly so that the air in the engine and radiator can escape.*

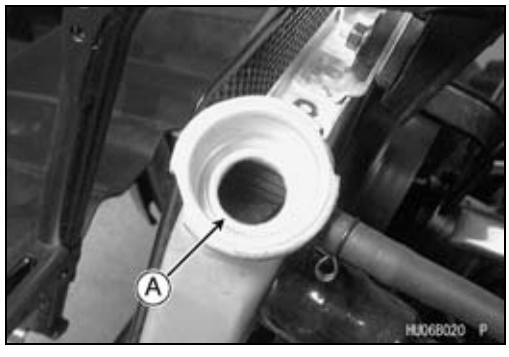

Periodic Maintenance Procedures

CAUTION

Soft or distilled water must be used with the antifreeze in the cooling system.
If hard water is used in the system, it causes scale accumulation in the water passages, considerably reducing the efficiency of the cooling system.

Water and Coolant Mixture Ratio (when shipping)

Soft Water:	**50%**
Coolant:	**50%**
Freezing Point:	**−35°C (−31°F)**
Total Amount:	**2.2 L (2.3 US qt)**

NOTE

○*Choose a suitable mixture ratio by referring to the coolant manufacturer's directions.*

● Bleed the air from the cooling system as follows.
○Start the engine with the radiator cap removed and run it until no more air bubbles [A] can be seen in the coolant.
○Tap the radiator hoses to force any air bubbles caught inside.
○Stop the engine and add coolant up to the radiator filler neck.
● Install the radiator cap.

● Remove the reserve tank cap.
● Fill the reserve tank up to the F mark [A] with coolant and install the cap.
● Start the engine, warm it up thoroughly until the radiator fan turns on and then stop the engine.
● Check the coolant level in the reserve tank after the engine cools down.
★If the coolant level is lower than the low level line [B], add coolant to the full level line.

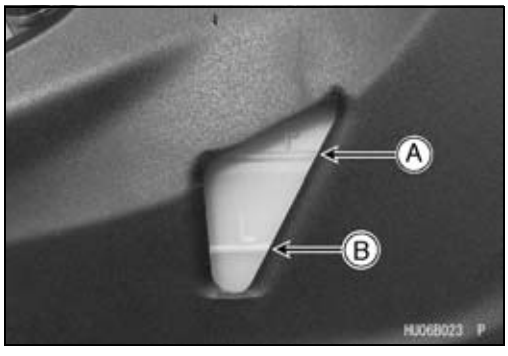

CAUTION

Do not add more coolant above the full level line.

Engine Top End

Valve Clearance Inspection

NOTE

○*Check the valve clearance only when the engine is cold (at room temperature).*

Periodic Maintenance Procedures

- Remove:
  Left Side Cover (see Left Side Cover Removal in the Frame chapter)
  Battery Case
  Valve Adjusting Caps [A]
  Recoil Starter (see Recoil Starter Removal in the Recoil Starter chapter)

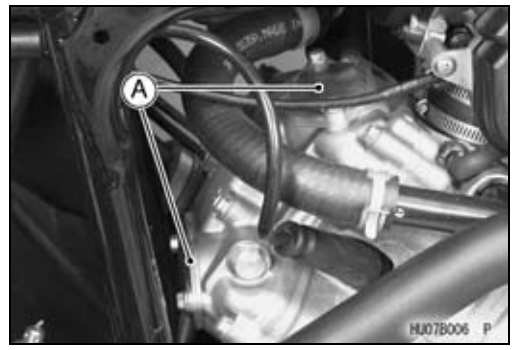

- Remove the timing inspection plug [A].

  Special Tool - Filler Cap Driver [B]: 57001-1454

- Turn the crankshaft **counterclockwise** with a wrench on the alternator rotor bolt until “T-F” mark [A] on the alternator rotor aligns with the notch [B] as shown: the end of the compression stroke in the front cylinder head.

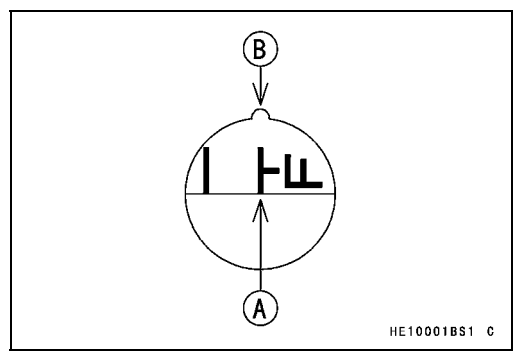

- Measure the clearance for all four valves, one at a time between the end of the valve stem and the adjusting screw [A] with the thickness gauge [B].

  Valve Clearance (when cold)
  Exhaust 0.20 ~ 0.25 mm (0.0079 ~ 0.0098 in.)
  Inlet 0.10 ~ 0.15 mm (0.0039 ~ 0.0059 in.)

★If the valve clearance is not correct, adjust it (see Valve Clearance Adjustment).

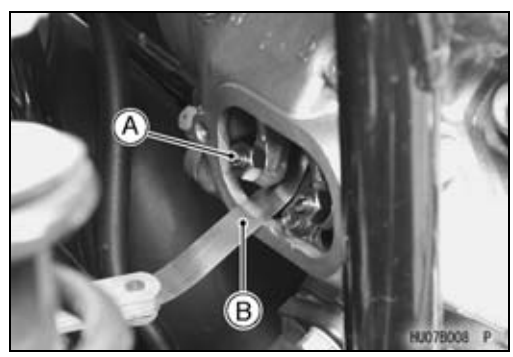

- Then, turn the crankshaft **counterclockwise** with a wrench on the alternator rotor bolt until “T-R” mark [A] on the alternator rotor aligns with the notch [B] as shown: the end of the compression stroke in the rear cylinder head.
- Measure the clearance for all four valves, one at a time between the end of the valve stem and the adjusting screw with the thickness gauge.

  Valve Clearance (when cold)
  Exhaust 0.20 ~ 0.25 mm (0.0079 ~ 0.0098 in.)
  Inlet 0.10 ~ 0.15 mm (0.0039 ~ 0.0059 in.)

★If the valve clearance is not correct, adjust it (see Valve Clearance Adjustment).

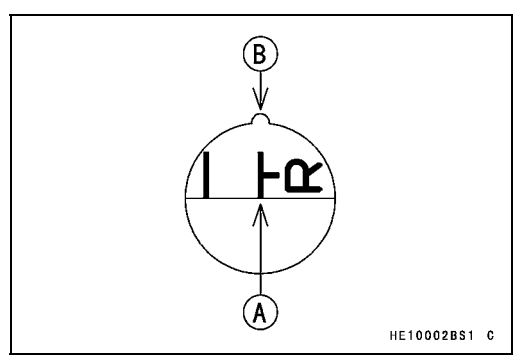

Periodic Maintenance Procedures

Valve Clearance Adjustment

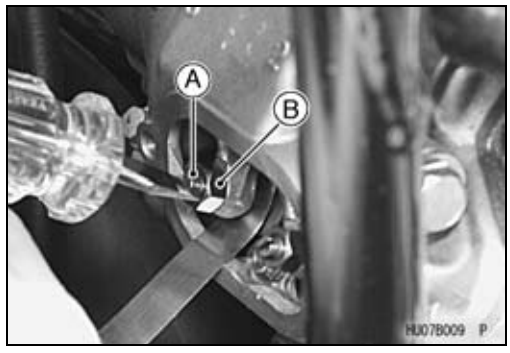

- Remove the valve adjusting caps.
- Loosen the locknut and turn the adjusting screw until the clearance is correct.
- Hold the adjusting screw [A] from turning and tighten the locknut [B].

Torque - Valve Adjusting Screw Locknuts: 12 N·m (1.2 kgf·m, 104 in·lb)

- Recheck the clearance.

★If the clearance is incorrect, repeat the adjustment procedure.

★If the clearance is correct, perform the adjustment procedure on the other valve.

Spark Arrester Cleaning

⚠ WARNING

To avoid burns, wear gloves while cleaning the spark arrester. Since the engine must be run during this procedure, the muffler will become hot.

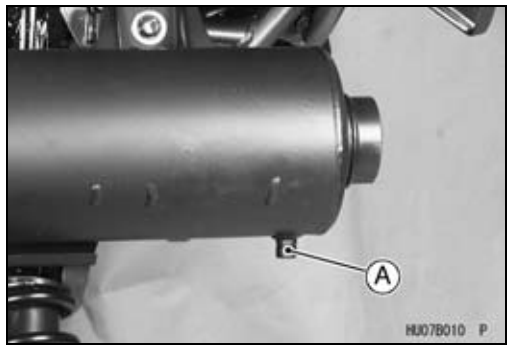

- Remove the drain plug [A] on the muffler.
- In an open area away from combustible materials, start the engine with the transmission in neutral.
- Raise and lower engine speed while tapping on the muffler with a rubber mallet until carbon particles are purged from the muffler.

⚠ WARNING

Do not run the engine in a closed area. Exhaust gases contain carbon monoxide; a colorless, odorless, poisonous gas. Breathing exhaust gas leads to carbon monoxide poisoning, asphyxiation, and death.

- Stop the engine.
- Install the drain plug.

Converter System

Converter Drive Belt Wear Inspection

Inspection of the drive belt is required at least every 90 days of vehicle use (average 12 mile/day) not to exceed 1 700 km (1 100 mile) or belt indicator light turn on (100 hours of use) counted by the hour meter. More frequent inspection is necessary if the vehicle is subjected to hard usage.

⚠ WARNING

Neglect, abuse, or failure to maintain the transmission can result in a severely worn or damaged drive belt locking up the transmission and wheels. This can cause the operator to lose control and have an accident resulting in injury or death.

Periodic Maintenance Procedures

- Remove the torque converter cover (see Torque Converter Cover in the Converter System chapter).
- Measure the width [A] of the belt at several locations with a pair of suitable straightedges [B] as shown.

★If any measurements exceed the service limit, replace the belt.

Belt Width

Standard: 29.7 ~ 30.3 mm (1.169 ~ 1.193 in.)

Service Limit: 28.0 mm (1.102 in.)

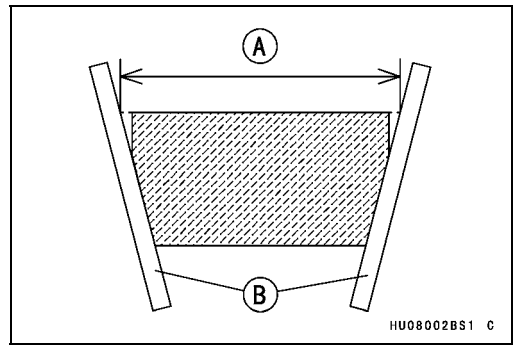

NOTE

○*Use the belt measuring gauge [A] in order to make easy to inspect the drive belt width.*

Special Tool - Belt Measuring Gauge: 57001-1646

- Fit the drive belt [B] into the belt measuring gauge.

★If the upper surface [C] of the belt lowers than the upper surface [D] of the gauge, replace the belt.
[E] 28 mm (1.102 in.)

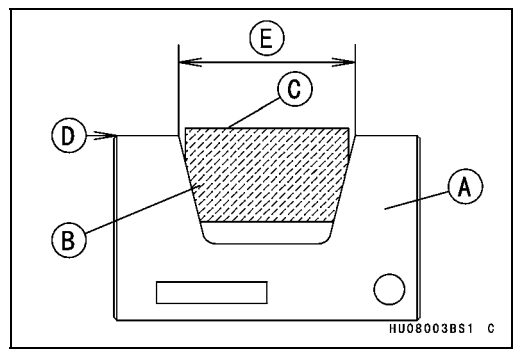

- Check the belt [A] for abnormal wear [B].

○Measure the width [C] of the belt at abnormal wear point.

★If any measurements exceed 0.5 mm (0.02 in.), replace the belt.

○When using the belt of large abnormal wear, the drive belt failure detection switch could be activated.

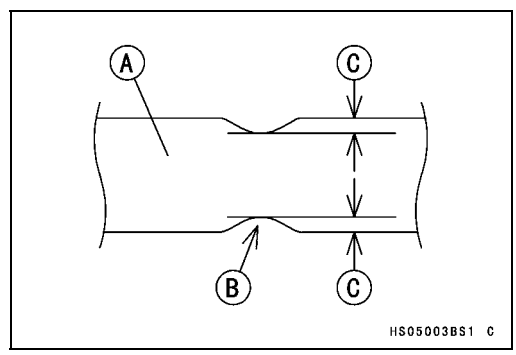

- Check the belt for cracks, breaks, or peeling.

★If necessary, replace the belt with a new one.
Belt [A]
Crack [B]
Broken [C]
Peeling [D]

NOTE

○*Whenever the belt is replaced, inspect the drive and the driven pulleys.*

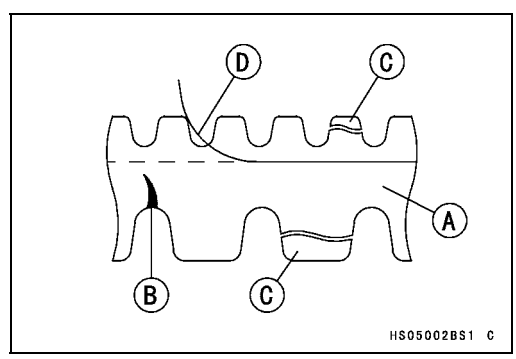

Converter Drive Belt Deflection Inspection

- Remove the torque converter cover (see Torque Converter Cover Removal in the Converter System chapter).
- Put the transmission in neutral and rotate the driven pulley by hand to make sure the belt is shifted all the way to the top of the driven pulley.

Periodic Maintenance Procedures

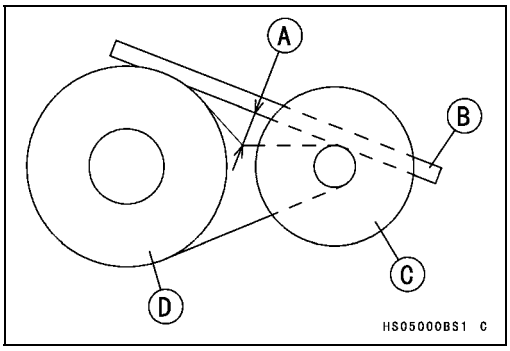

- Measure the belt deflection [A] as shown:

○Place a straightedge [B] on top of the belt between the drive pulley [C] and the driven pulley [D].

○Use a ruler to push the belt away from the straightedge. Push hard, but with no more force than 59 N (6 kgf, 13 lb).

Belt Deflection
Standard: 22 ~ 27 mm (0.87 ~ 1.06 in.)

★If the belt deflection is not within the specified range, adjust the deflection by adding or removing spacers on the fixed sheave of the driven pulley.

- When adjusting the deflection, less is better than more. Less deflection will maintain better performance for more time as the belt width decreases by normal wear, which causes the deflection to increase with usage.

Converter Drive Belt Deflection Adjustment

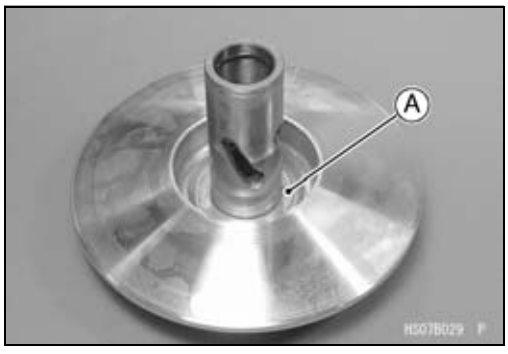

- Disassemble the driven pulley (see Driven Pulley Disassembly in the Converter System chapter).

★If the belt deflection is more than 27 mm (1.06 in.), remove the spacers to decrease it.

○The rule-of-thumb is: 0.1 mm (0.004 in.) change in spacer thickness equals about 1.3 mm (0.051 in.) change in belt deflection.

★If the adjustment cannot be done within the specified range even if the shim is removed, replace the drive belt.

★If the belt deflection is less than 22 mm (0.87 in.), add the spacers [A] to increase it.

○The rule-of-thumb is: 0.1 mm (0.004 in.) change in spacer thickness equals about 1.6 mm (0.063 in.) change in belt deflection.

NOTE

○*When using the plural spacers, install the thick spacer to the movable sheave side and thin spacer to the fixed sheave side.*

Spacers

Part No.	Thickness
92026-0034	0.3 mm (0.012 in.)
92026-1569	0.6 mm (0.024 in.)
92026-1617	0.8 mm (0.032 in.)
92026-1565	1.0 mm (0.039 in.)
92026-1570	1.4 mm (0.055 in.)

- Assemble the driven pulley (see Driven Pulley Assembly in the Converter System chapter).

Periodic Maintenance Procedures

- With the transmission in neutral, rotate the driven pulley to allow the belt to return to the top of the sheaves before measuring the belt deflection.
- Measure the belt deflection again and repeat the above procedures until it is within the standard range.
- Using the flywheel & pulley holder and pulley holder attachment, tighten the driven pulley nut.

Special Tools - Flywheel & Pulley Holder: 57001-1605
Pulley Holder Attachment: 57001-1472

Torque - Driven Pulley Nut: 93 N·m (9.5 kgf·m, 69 ft·lb)

Actuator Lever (Engine Brake Control Lever) Assembly Inspection

- Measure the width [A] of the plastic guide shoe [B] of the actuator lever assembly.

★If the guide contact area width is greater than the service limit, replace the actuator lever assembly.

Actuator Lever Guide Shoe
Service Limit: 6 mm (0.24 in.)

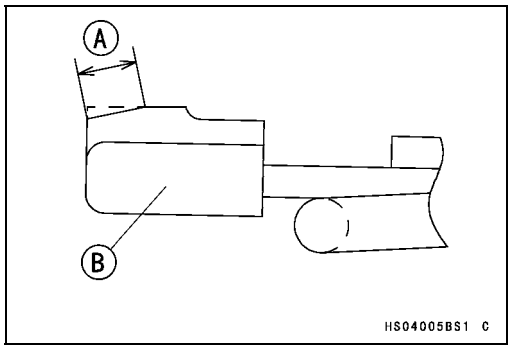

Engine Lubrication System

Engine Oil Change

- Support the vehicle so that it is level, both side to side and front to rear after warming up the engine.
- Remove the engine oil drain plug [A] to drain the oil.

○The oil in the filter can be drained by removing the filter (see Oil Filter Change).

- Replace the oil drain plug gasket with a new one.
- Tighten:

Torque - Engine Oil Drain Plug: 20 N·m (2.0 kgf·m, 14 ft·lb)

- Pour in the specified type and amount of oil.

Engine Oil

Type:	**API SF or SG**
	API SH, SJ or SL with JASO MA
	API SH or SJ with JASO MA (A1 ~ A6F, B1 ~ B6F, C6F)
Viscosity:	**SAE 10W-40**
Amount:	**2.1 L (2.2 US qt)**
	(When filter is not removed)
	2.2 L (2.3 US qt)
	(When filter is removed)
	2.6 L (2.7 US qt)
	(When engine is completely dry)

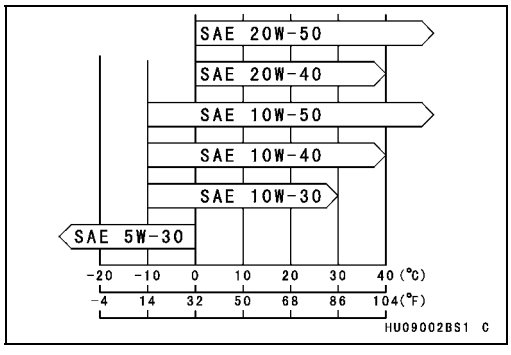

NOTE

○*Although 10W-40 engine oil is the recommended oil for most conditions, the oil viscosity may need to be changed to accommodate atmospheric conditions in your riding area.*

Periodic Maintenance Procedures

Oil Filter Replacement

- Drain the engine oil.
- Remove the oil filter [A] with the oil filter wrench [B].

Special Tool - Oil Filter Wrench: 57001-1249

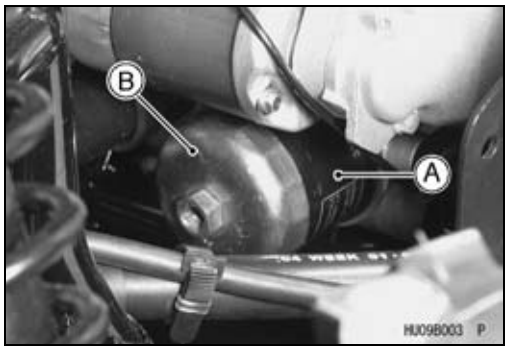

- Replace the filter with a new one.
- When installing the oil filter, be careful of the following.

○Apply oil to the gasket [A] before installation.
○Tighten the filter with the oil filter wrench.

Special Tool - Oil Filter Wrench: 57001-1249

Torque - Oil Filter: 18 N·m (1.8 kgf·m, 13 ft·lb)

○Pour in the specified type and amount of oil.

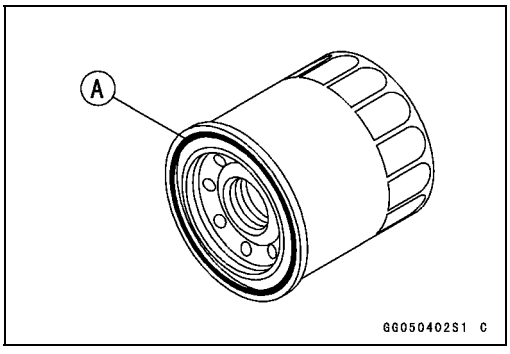

Wheels/Tires

Tire Inspection

- Examine the tire for damage and wear.

★If the tire is cut or cracked, replace it.
○Lumps or high spots on the tread or sidewalls indicate internal damage requiring tire replacement.
○Remove any foreign objects from the tread. After removal, check for leaks with a soap and water solution.

- Measure the tread depth at the center of the tread with a depth gauge [A]. Since the tire may wear unevenly, take measurements at several places.

★If any measurements are less than the service limit, replace the tire.

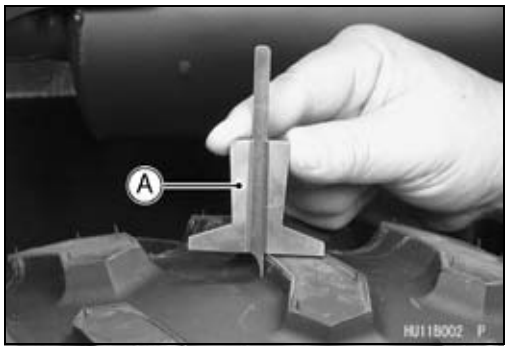

Tire Tread Depth

Service Limit:

Front	**3 mm (0.12 in.)**
Rear	**4 mm (0.16 in.)**

Standard Tire

Front:	**AT 25 × 8 - 12**
	DUNLOP, KT191, Tubeless
Rear:	**AT 25 × 10 - 12**
	DUNLOP, KT195, Tubeless

Periodic Maintenance Procedures

Final Drive

Variable Differential Control Lever Play Inspection

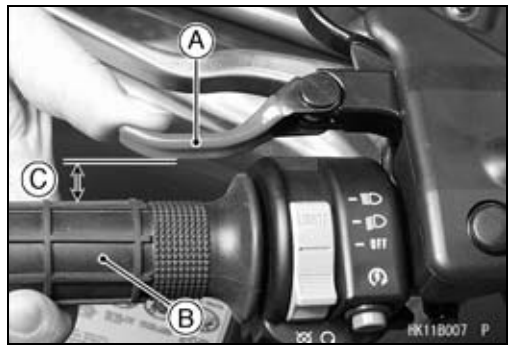

- Pull the variable differential control lever [A] towards the handlebar grip [B] with a spring scale until it reads 30 N (3 kgf, 7 lb) of force.

○The differential control in the front final gear case must be locked, then the clearance [C] between the control lever and grip should be 20 mm (0.8 in.).

★If the clearance is not the specified length, adjust the cable.

Differential Control Lever Lock Position Length
Standard: 20 mm (0.8 in.)

Variable Differential Control Lever Play Adjustment

- Remove:
  Handlebar Cover Screws [A]

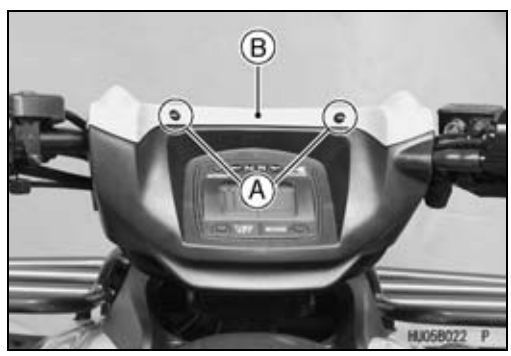

- Remove:
  Handlebar Cover Screws [A]
  Handlebar Cover Front [B]

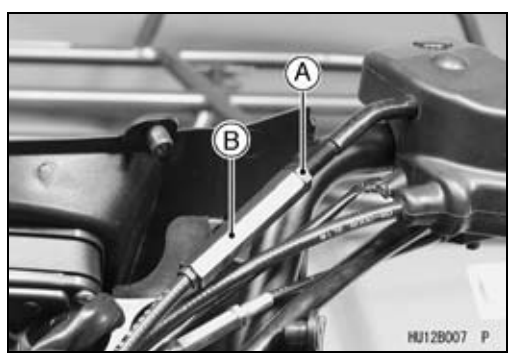

- Loosen the locknut [A] of the differential control cable.
- Turn the adjuster [B] until the cable has proper amount of play.
- Tighten the locknut securely.

Periodic Maintenance Procedures

Front Final Gear Case Oil Change

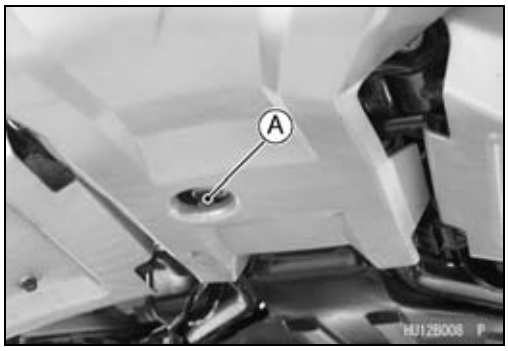

- Warm up the oil by running the vehicle so that the oil will pick up any sediment and drain easily. Then stop the vehicle.
- Park the vehicle so that it is level, both side-to-side and front-to-rear.
- Remove the right side cover (see Right Side Cover Removal in the Frame chapter).
- Place an oil pan beneath the front final gear case and remove the oil drain plug [A].

⚠ WARNING

When draining or filling the final gear case, be careful that no oil gets on the tire or rim. Clean off any oil that inadvertently gets on them with a high-flash point solvent.

- After the oil has completely drained out, install the oil drain plug with a new aluminum gasket, and tighten it.

Torque - Front Final Gear Case Oil Drain Plug: 15 N·m (1.5 kgf·m, 11 ft·lb)

- Fill the gear case up to the bottom of filler opening with the oil specified below.

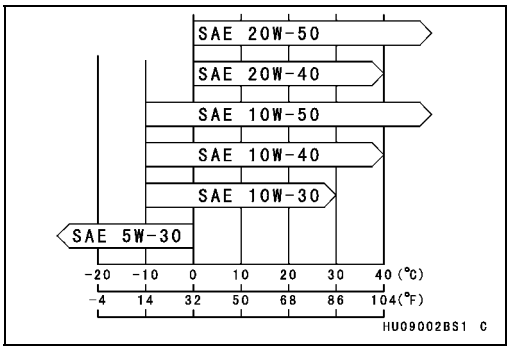

Front Final Gear Case Oil

Type:	**API SF or SG**
	API SH, SJ or SL with JASO MA
	API SH or SJ with JASO MA (A1 ~ A6F, B1 ~ B6F, C6F)
Viscosity:	**SAE 10W-40**
Capacity:	**0.40 L (0.42 US qt)**

NOTE

○*Depending on the atmospheric temperature of your riding area, the engine oil viscosity should be changed according to the chart.*

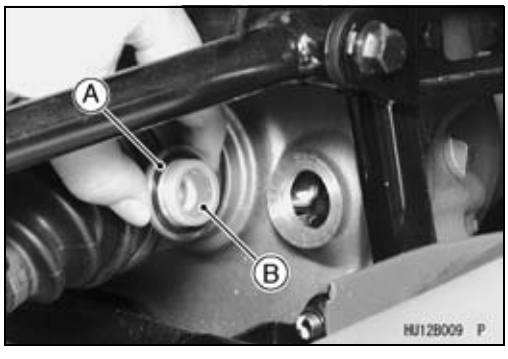

- Be sure the O-ring [A] is in place, and tighten the filler cap [B].

○Apply grease to the O-ring.

Torque - Oil Filler Cap: 29 N·m (3.0 kgf·m, 22 ft·lb)

Periodic Maintenance Procedures

Rear Final Gear Case Oil Change

- Warm up the oil by running the vehicle so that the oil will pick up any sediment and drain easily. Then stop the vehicle.
- Park the vehicle so that it is level, both side-to-side and front-to-rear.
- Place an oil pan beneath the rear final gear case and remove the oil drain plug [A].

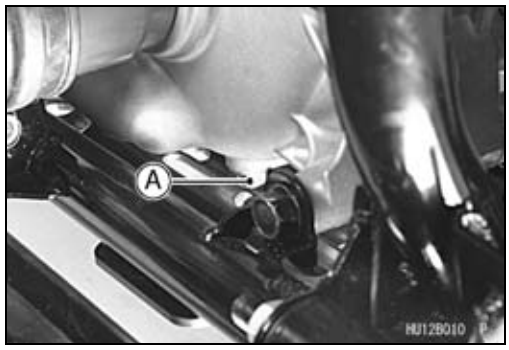

⚠ WARNING

When draining or filling the final gear case, be careful that no oil gets on the tire or rim because oil will deteriorate the tire. Clean off any oil that inadvertently gets on them with a high-flash point solvent.

- After the oil has completely drained out, install the oil drain plug with a new aluminum gasket.

  Torque - Rear Final Gear Case Oil Drain Plug: 15 N·m (1.5 kgf·m, 11 ft·lb)

- Fill the final gear case up to the bottom of filler opening with the oil specified below.

  Rear Final Gear Case Oil

  Type: MOBIL FLUID 424, CITGO TRANSGARD TRACTOR HYDRAULIC FLUID or EXXON HYDRAUL 560

  Capacity: 0.72 L (0.76 US qt)

○Do not use mixing the above oils.

- Be sure the O-ring [A] is in place, and tighten the filler cap [B].

○Apply grease to the O-ring.

Torque - Oil Filler Cap: 29 N·m (3.0 kgf·m, 22 ft·lb)

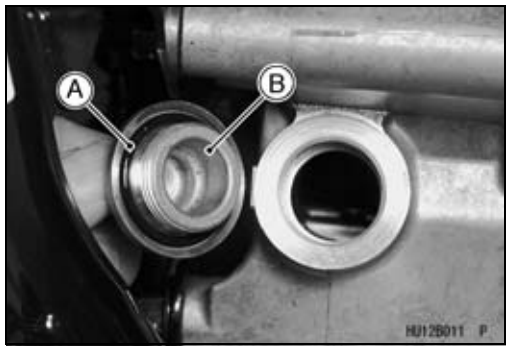

Universal Joint Lubrication

- Remove:
  Rear Propeller Shaft (see Rear Propeller Shaft Removal in the Final Drive chapter)
- Force grease into the grease nipples [A] until the grease comes out from the nipple, and wipe off any excess grease.
  [B] Grease Gun

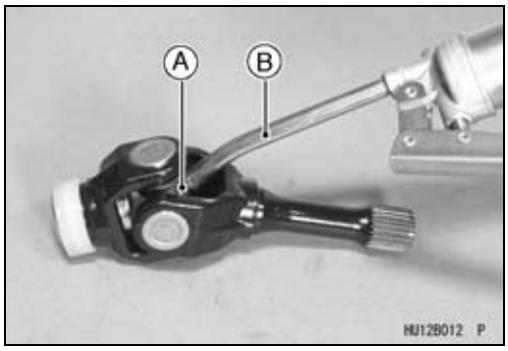

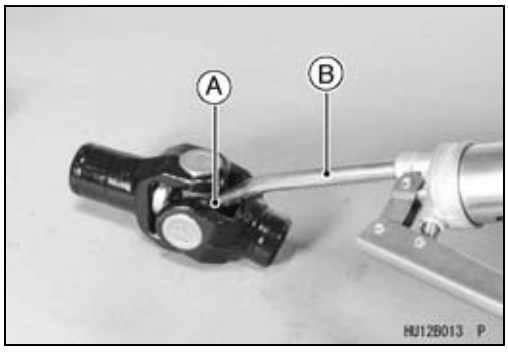

Brakes

Front Brake Pad Wear Inspection

- Check the lining thickness [A] of the pads in each caliper.

★If the lining thickness of either pad is less than the service limit [B], replace both pads in the caliper as a set.

Pad Lining Thickness

Standard:	**4 mm (0.16 in.)**
Service Limit:	**1 mm (0.04 in.)**

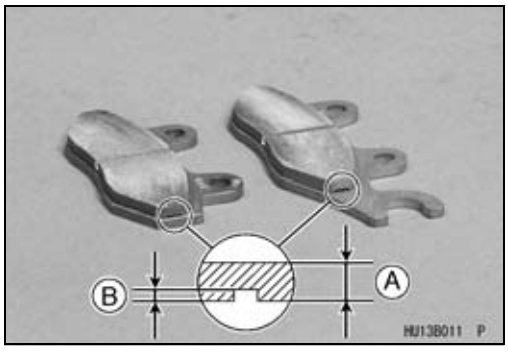

Front Brake Hoses and Connections Inspection

- Inspect the brake hose and fittings for deterioration, cracks and signs of leakage.

○The high pressure inside the brake line can cause fluid to leak [A] or the hose to burst if the line is not properly maintained. Bend and twist the rubber hose while examining it.

★Replace the hose if any cracks [B] or bulges [C] are noticed.

- Tighten any loose fittings.

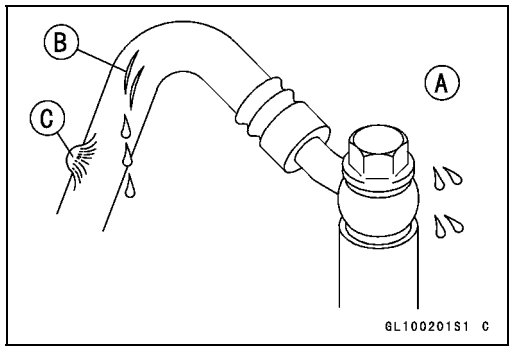

Periodic Maintenance Procedures

Front Brake Hose Replacement

- Pump the brake fluid out of the line as explained in the Brake Fluid Change.
- Remove the banjo bolts at both ends of the brake hose, and pull the hose off the vehicle.
- Immediately wipe up any brake fluid that spills.

CAUTION

Brake fluid quickly ruins painted surfaces; any spilled fluid should be completely washed away immediately.

- Use a new flat washer for each side of the hose fittings.
- Install the new brake hose in its place, and tighten the banjo bolts.

Torque - Brake Hose Banjo Bolts: 25 N·m (2.5 kgf·m, 18 ft·lb)

Front Brake Fluid Level Inspection

- Position the reservoir horizontal, and check that the fluid level in the reservoir is higher than the lower level line [A].

★If the fluid level is lower than the lower level line, check for fluid leakage of the brake line, and add the fluid as follows:

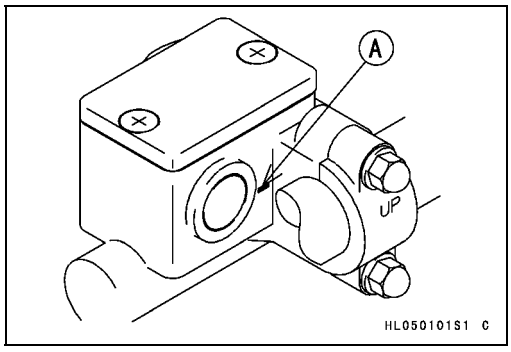

○Remove the reservoir cap, and fill the reservoir to the upper level line [A] in the reservoir with the same type and brand of the fluid that is already in the reservoir. And then install the reservoir cap.

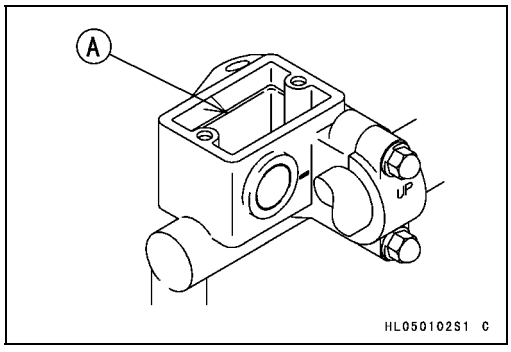

⚠ WARNING

Change the fluid in the brake line completely if the fluid must be refilled but the type and brand of the fluid that is already in the reservoir are unidentified.

- Tighten:

Torque - Reservoir Cap Screws: 1.5 N·m (0.15 kgf·m, 13 in·lb)

Front Brake Fluid Change

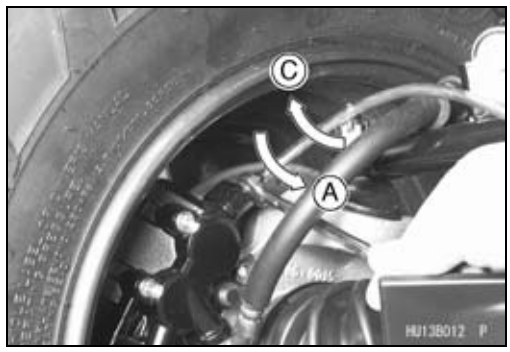

- Remove the reservoir cap and the rubber cap on the bleed valve.
- Attach a clear plastic hose to the bleed valve on the caliper, and run the other end of the hose into a container.
- Fill the reservoir with new brake fluid.
- Change the brake fluid as follows:

○Open the bleed valve [A].
○Apply the brake lever and hold it [B].
○Close the bleed valve [C].
○Release the brake lever [D].

- Check the fluid level in the reservoir often, replenishing it as necessary.

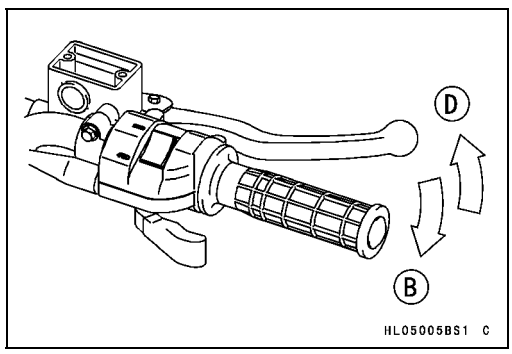

NOTE

○*If the fluid in the reservoir runs completely out any time during fluid changing, air will enter the line, and the system must be bled.*

- Repeat this operation until fresh brake fluid comes out into the plastic hose or the color of the fluid changes.

⚠ WARNING

Do not mix two brands of fluid. Change the brake fluid in the brake line completely if the brake fluid must be refilled but the type and brand of the brake fluid that is already in the reservoir are not known.

- Tighten:

Torque - Bleed Valves: 7.8 N·m (0.80 kgf·m, 69 in·lb)

- Apply the brake lever forcefully for a few seconds, and check for fluid leakage around the fittings.

★If necessary, bleed the air from the brake line (see Brake Line Air Bleeding section in the Brakes chapter).

⚠ WARNING

If the brake lever has a soft or "spongy feeling" when it is applied, there might be air in the brake line or the brake may be defective. Since it is dangerous to operate the vehicle under such conditions, bleed the air from the brake line immediately.

Front Brake Master Cylinder Piston Assembly and Dust Cover Replacement

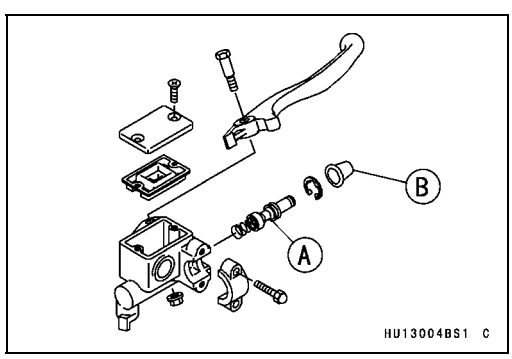

- Disassemble the master cylinder (see Front Brake Master Cylinder Disassembly in the Brakes chapter).
- Replace the piston assembly [A] and dust cover [B] under following condition:
  a)Primary and secondary cups are worn, damaged, softened (rotted) or swollen.
  b)Fluid leakage is noted at the brake lever,
  c)Dust cover is broken or swollen.

Periodic Maintenance Procedures

Front Brake Caliper Fluid Seal Replacement

The fluid seals [A] around the piston maintain the proper pad/disc clearance. If the seals are not satisfactory, pad wear will increase, and constant pad drag on the disc will raise brake and brake fluid temperature.

- Replace the fluid seals in accordance with the Periodic Maintenance Chart or under any of the following conditions: (a) fluid leakage around the pad; (b) brakes overheat; (c) there is a large difference in inner and outer pad wear; (d) the seal is stuck to the piston.

★If the fluid seal is replaced, replace the dust seal as well. Also, replace all seals every other time the pads are changed.

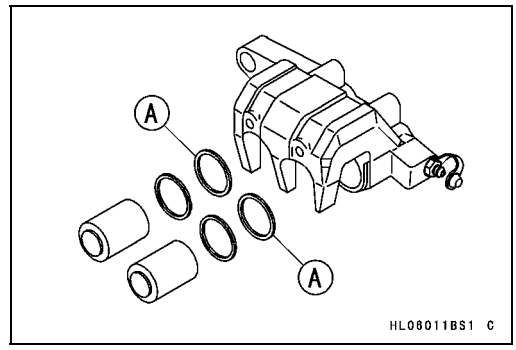

Front Brake Caliper Dust Seal and Friction Boot Replacement

- Replace the dust seals [A] in accordance with the Periodic Maintenance Chart or check that the dust seals and rubber boots [B] are not cracked, worn swollen, or otherwise damaged.

★If they show any damage, replace them.

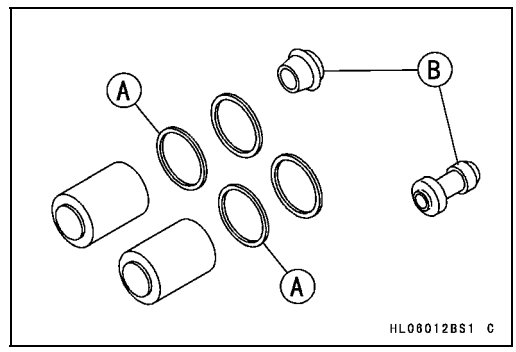

Rear Brake Plates Replacement

- Replace the steel plates and friction plates in accordance with the specified interval (see Rear Final Gear Case section in the Final Drive chapter).

Rear Brake Lever Free Play Inspection

- Check the rear brake lever free play [A].

○Pull the rear brake lever lightly until the brake is applied.

★If the play is incorrect, adjust it.

Rear Brake Lever Free Play
Standard: 1 ~ 2 mm (0.04 ~ 0.08 in.)

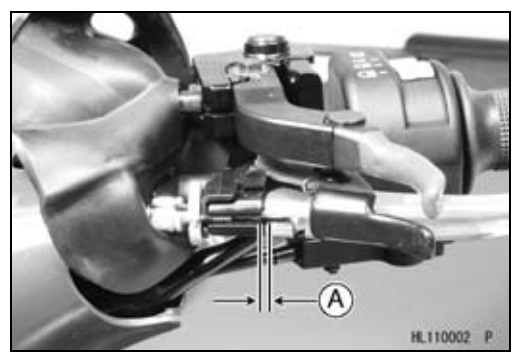

Rear Brake Pedal Free Play Inspection

- Check the brake pedal free play [A].

○Depress the brake pedal lightly by hand until the brake is applied.

★If the free play is incorrect, adjust it.

Brake Pedal Free Play
Standard: 15 ~ 25 mm (0.6 ~ 1.0 in.)

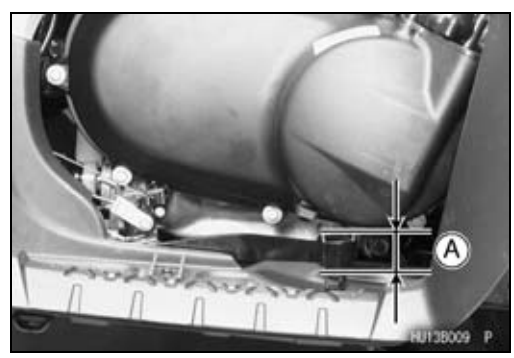

Rear Brake Lever and Pedal Free Play Adjustment

NOTE

○*Since the rear brake lever and pedal free play adjustments affect each other, make them at the same time.*

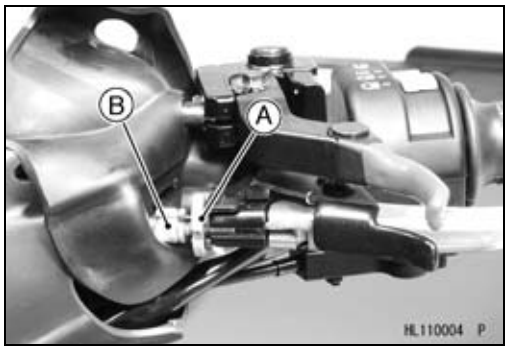

Rear Brake Lever:

- Loosen the knurled locknut [A] and turn the adjuster [B] at the rear brake lever in as far as it will go.
- Tighten the locknut.

- Turn the brake lever adjuster [A] at the rear end of the brake cable until the rear brake lever has the correct amount of play.

Rear Brake Pedal:

- Turn the brake pedal adjuster [A] at the rear end of the brake cable until the brake pedal has the correct amount of play.

- Operate the pedal a few times to see that it returns to its rest position immediately upon release.
- Rotate the rear wheels to check for brake drag.
- Check braking effectiveness.

★If there is any doubt as to the conditions of the brake, check the brake parts for wear or damage.

Steering

Steering Inspection

- Turn the handlebar left and right, and check the steering action.

★If the steering action is not smooth, or if the steering binds or catches before the stop, lubricate the steering stem bearing.

NOTE

○*The cables and wires will have some effect on the steering action which must be taken into account.*

Periodic Maintenance Procedures

- Check the steering action again.

★If steering stem bearing lubrication does not remedy the problem, inspect the steering stem for straightness, steering stem clamps, and tie-rod bearings.

★If you feel looseness, or if the steering rattles as it turns, check the tightness of the steering bolts and nuts.

- Tighten loose bolts and nuts to the specified torque (see Steering chapter), and check the steering action again.

★If the steering action does not change by tightening the bolts and nuts, inspect the steering stem clamps, steering stem bearings, tie-rod bearings, and steering knuckle joints.

Electrical System

Spark Plug Cleaning/Inspection

- Remove the spark plug (see Spark Plug Removal in the Electrical System chapter).
- Clean the spark plug, preferably in a sandblasting device, and then clean off any abrasive particles. The plug may also be cleaned using a wire brush or other suitable tool.

★If the spark plug electrodes are corroded or damaged, or if the insulator is cracked, replace the plug. Use the standard spark plug or its equivalent.

Spark Plug Gap Inspection

- Measure the gap [A] with a wire-type thickness gauge.

★If the gap is incorrect, carefully bend the side electrode [B] with a suitable tool to obtain the correct gap.

Spark Plug Gap
0.7 ~ 0.8 mm (0.028 ~ 0.032 in.)

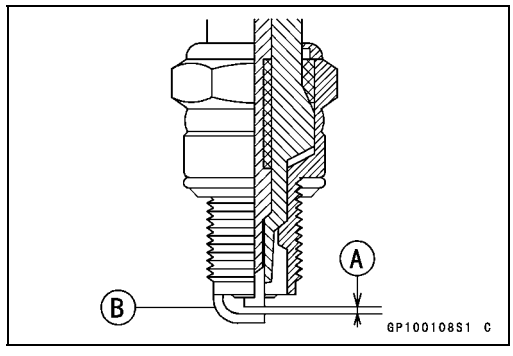

Rear Brake Light Switch Inspection

- Turn on the ignition switch.
- Check the operation of the rear brake light switch by depressing the brake pedal.

★If it does not as specified, adjust the brake light timing.

Brake Light Timing
Standard: On after about 10 mm (0.4 in.) of pedal travel [A]

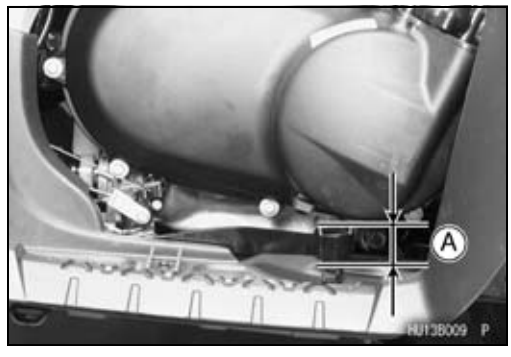

Periodic Maintenance Procedures

Rear Brake Light Timing Adjustment

- Remove the right footboard (see Right Footboard Removal in the Frame chapter).
- Adjust the brake light switch [A] up or down. To change the switch position, turn the adjusting nut [B].
  Light sooner as the body rises [C]
  Light later as the body lowers [D]

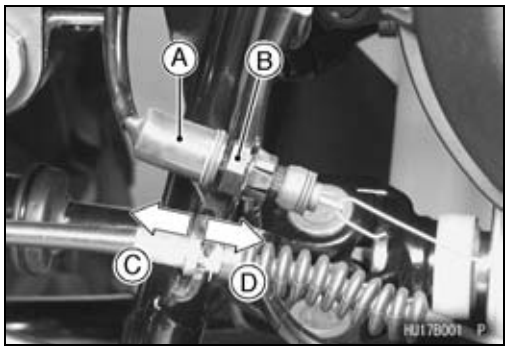

CAUTION

To avoid damaging the electrical connections inside the switch, be sure that the switch body does not turn during adjustment.

Converter Drive Belt Failure Detection System Inspection

- Remove:
  Seat (see Seat Removal in the Frame chapter)
- Check the drive belt failure detection system according to following chart in the next page.

Periodic Maintenance Procedures

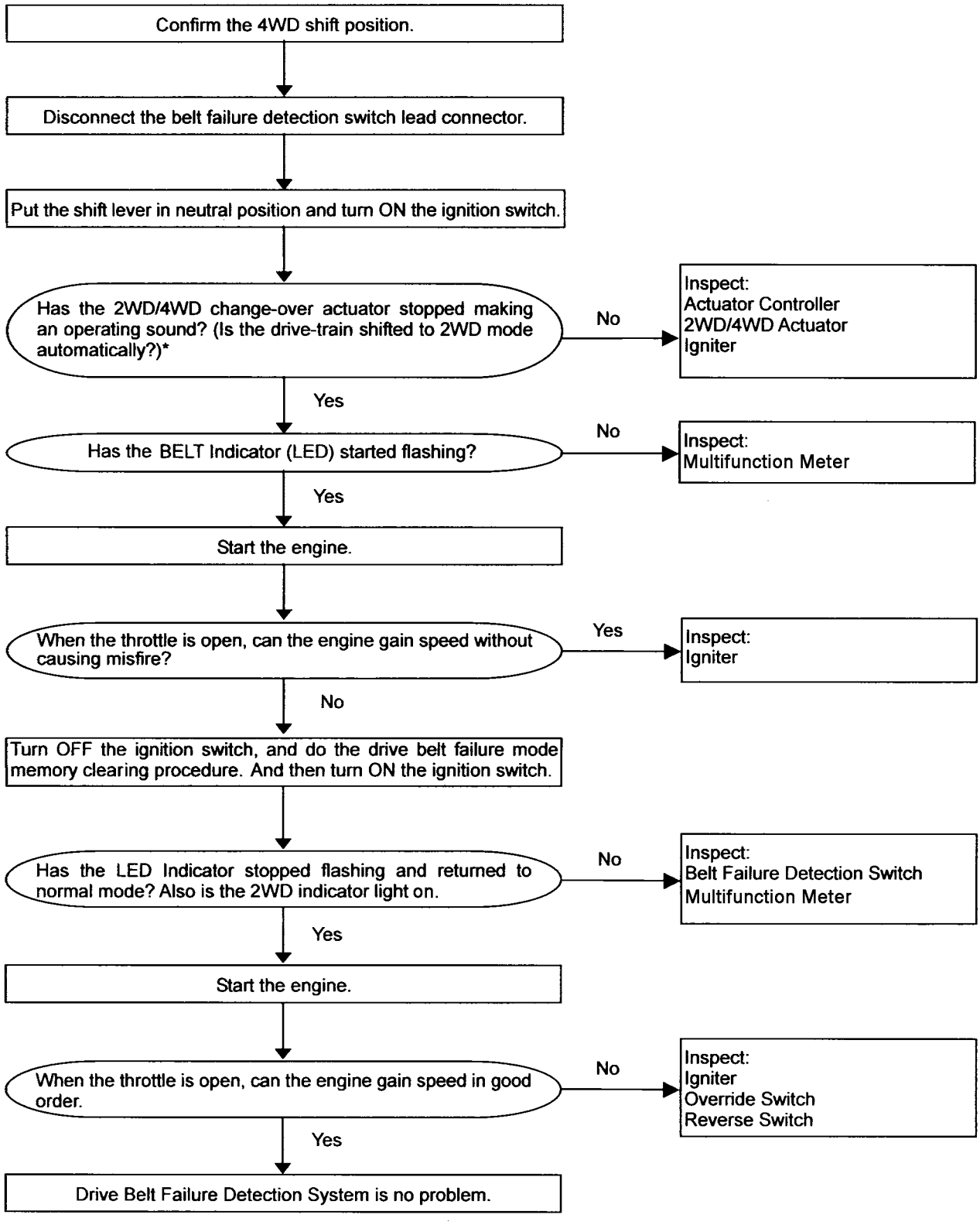

*: If (2WD/4WD change-over) the actuator keeps making a sound, try move the vehicle back and forth a little. This will help that the actuator disconnect the drive train.

HP24011B S

Joint Boots Inspection

Front Axle/Steering Knuckle Joint Boots Inspection

- Visually inspect the front axle joint boots [A].
- ★If the joint boot is torn, worn, deteriorated, or leaks grease, replace the joint boot or front axle assembly (see Front Axle Joint Boot Replacement in the Final Drive chapter).
- Visually inspect the knuckle joint boots [B].
- ★If the joint boot is torn, worn, deteriorated, or leaks grease, replace the knuckle (see Steering Knuckle section in the Steering chapter).

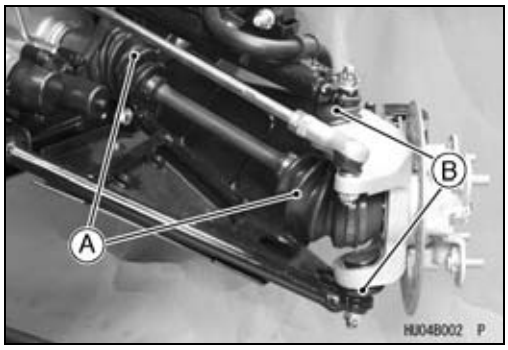

Front Propeller Shaft Joint Boots Inspection

- Visually inspect the boots [A] of the front propeller shaft.
- ★If damage, tear or deterioration is found, replace the boots (see Front Propeller Shaft section in the Final Drive chapter).

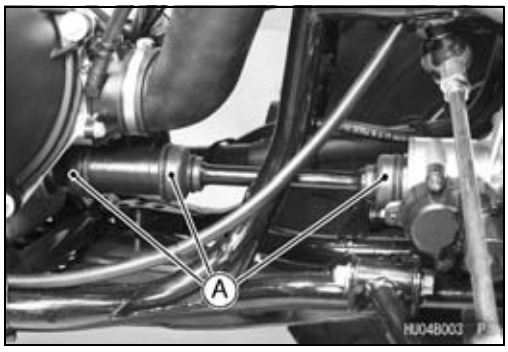

Tie-rod End Boots Inspection

- Visually inspect the tie-rod end boots [A] of the tie-rods.
- ★If the boot is torn, worn, deteriorated, or leaks grease, replace the tie-rod end (see Tie-Rod End Removal in the Steering chapter).

Rear Propeller Shaft Joint Boots Inspection

- Visually inspect the boots [A] of the rear propeller shaft.
- ★If the joint boot is torn, worn, or deteriorated, replace the joint boot and check the propeller shaft (see Rear Propeller Shaft section in the Final Drive chapter).

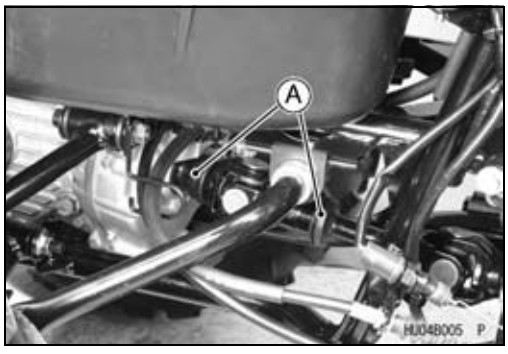

Rear Axle/Stabilizer Joint Boots Inspection

- Visually inspect the rear axle joint boots [A].
- ★If the joint boot is torn, worn, deteriorated, or leaks grease, replace the joint boot or rear axle assembly (see Rear Axle Joint Boot Replacement in the Final Drive chapter).
- Visually inspect the stabilizer joint boots [B].
- ★If the joint boot is torn, worn, deteriorated, or leaks grease, replace the stabilizer joint (see Stabilizer Removal in the Suspension chapter).

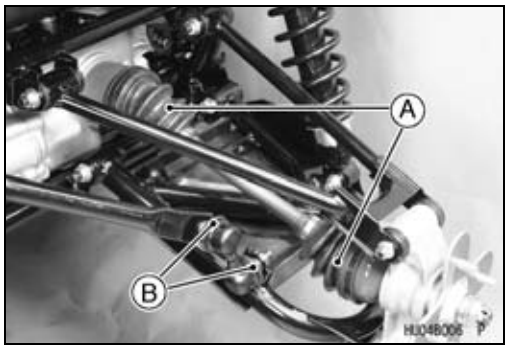

Periodic Maintenance Procedures

General Lubrication

Lubrication

- Before lubricating each part, clean off any rusty spots with rust remover and wipe off any grease, oil, dirt, or grime.
- Lubricate the points listed below with indicated lubricant.

NOTE

○*Whenever the vehicle has been operated under wet or rainy conditions, or especially after using a high-pressure spray water, perform the general lubrication.*

Cables: Lubricate with Cable Lubricant

Rear Brake Inner Cable
Throttle Inner Cable
Choke Inner Cables
Variable Differential Control Inner Cable

- Lubricate the cables by seeping the oil between the cable and housing.

○The cable may be lubricated by using a pressure cable luber with an aerosol cable lubricant.

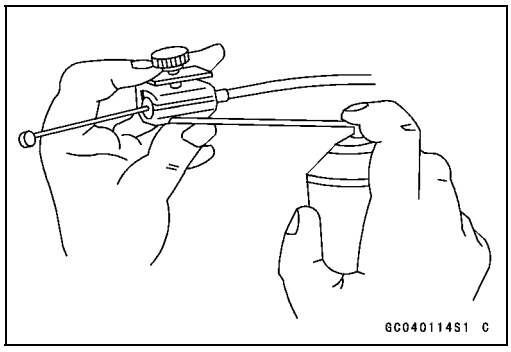

- With the cable disconnected at the both ends, the cable should move freely [A] within the cable housing.

★If cable movement is not free after lubricating, if the cable is frayed [B], or if the cable housing is kinked [C], replace the cable.

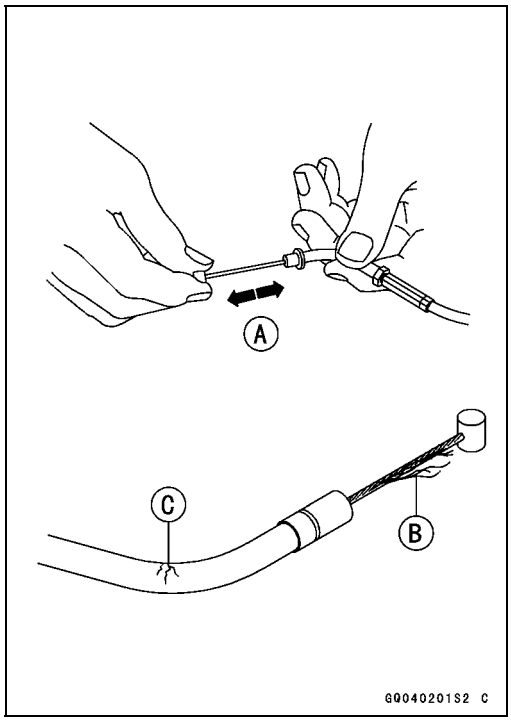

Points: Lubricate with Grease.

Throttle Inner Cable Upper End [A]
Choke Cable Lower Ends
Brake Cable Upper End
Variable Differential Control Cable Ends

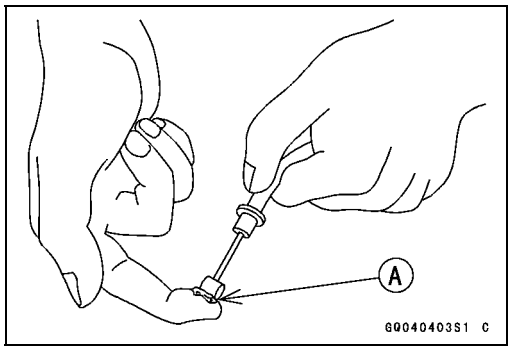

Periodic Maintenance Procedures

Slide Points: Lubricate with Grease.
Brake Lever
Brake Pedal Pivot Shaft
Throttle Lever Shaft

Bolts and Nuts Tightening

Tightness Inspection

- Check the tightness of the bolts and nuts listed here in accordance with the Periodic Maintenance Chart. Also, check to see that each cotter pin is in place and in good condition.

★If there are loose fasteners, retorque them to the specified torque following the specified tightening sequence. Refer to the appropriate chapter for torque specifications. If torque specifications are not listed in the appropriate chapter, see the Basic Torque Table (see Torque and Locking Agent). For each fastener, first loosen it by 1/2 turn, then tighten it.

★If cotter pins are damaged, replace them with new ones.

Bolts, Nuts, and Fasteners to be checked

Wheels:
Front Axle Nuts and Cotter Pins
Rear Axle Nuts and Cotter Pins
Wheel Nuts

Brakes:
Front Brake Master Cylinder Clamp Bolts
Brake Lever Pivot Bolt
Brake Lever Pivot Bolt Locknut
Front Brake Caliper Mounting Bolts
Brake Pedal Cotter Pin

Steering/Suspension:
Handlebar Holder Bolts
Steering Stem Clamp Bolts
Steering Stem Bearing Joint Bolts
Tie-rod End Nuts and Cotter Pins
Tie-rod Locknuts
Shock Absorber Mounting Nuts
Front Suspension Arm Pivot Nuts
Steering Knuckle Joint Nuts and Cotter Pins

Engine:
Engine Mounting Bolts
Engine Mounting Bracket Bolts
Exhaust Pipe Holder Nuts
Muffler Mounting Nuts
Muffler Clamp Bolt

Final Drive:
Rear Final Gear Case Bracket Bolts

Others:
Footboard Mounting Bolts
Throttle Case Screws
Carrier Bolts

Fuel System

Table of Contents

Exploded View

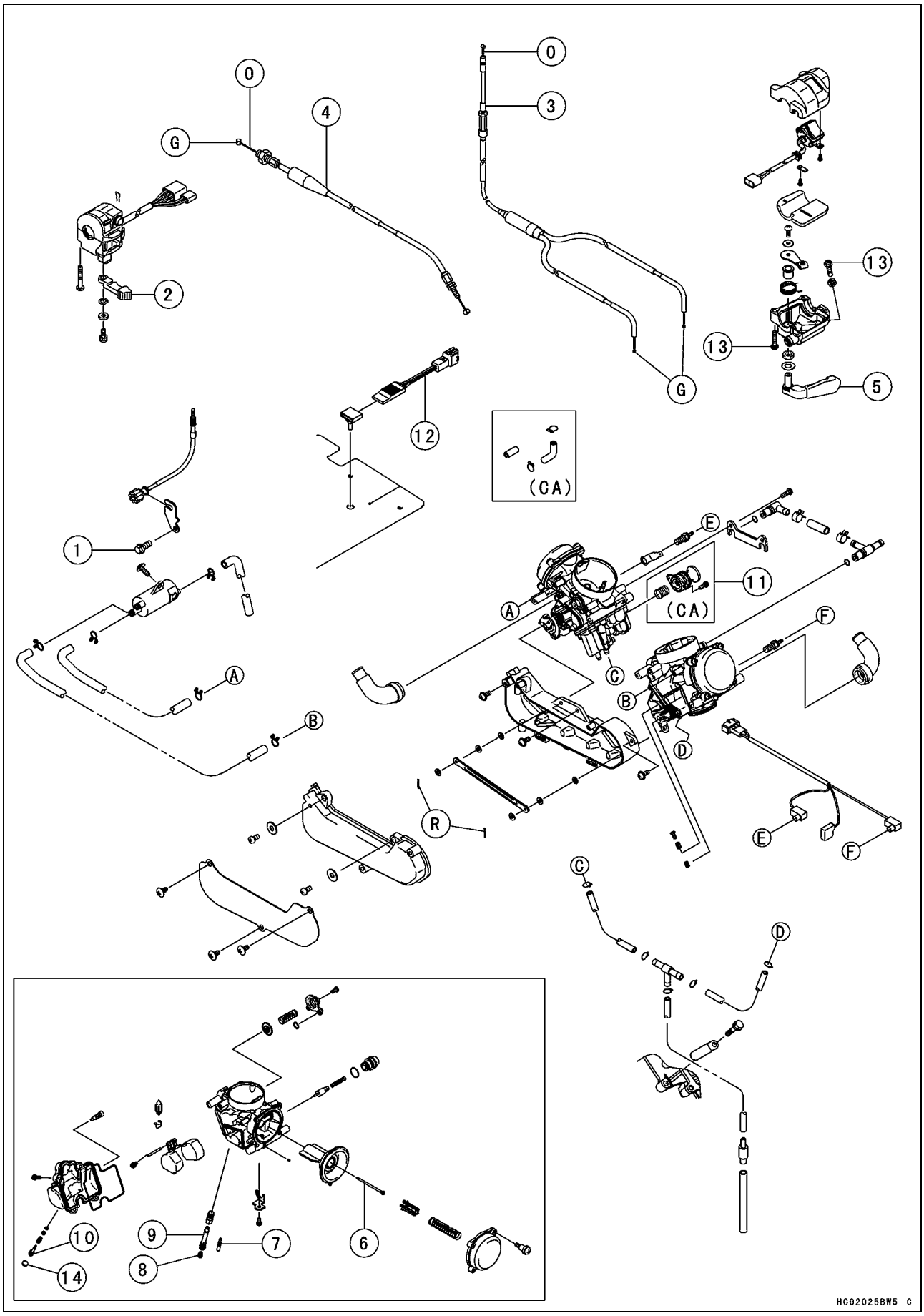

Exploded View

No.	Fastener	Torque			Remarks
		N·m	kgf·m	ft·lb	
1	Idle Adjusting Screw Bracket Bolt	8.8	0.90	78 in·lb	

2. Choke Lever
3. Choke Cable
4. Throttle Cable
5. Throttle Lever
6. Jet Needle
7. Pilot Jet
8. Main Jet
9. Needle Jet
10. Pilot Screw
11. Priming Pump
12. Air Temperature Sensor
13. Throttle Case Screws
14. Plug (KVF750A6F ~/B6F ~/C6F~ (United States model), KVF750A7F/B7F/C7F (CA model))

G: Apply grease.
O: Apply engine oil.
R: Replacement Parts

CA: Canada Model

Exploded View

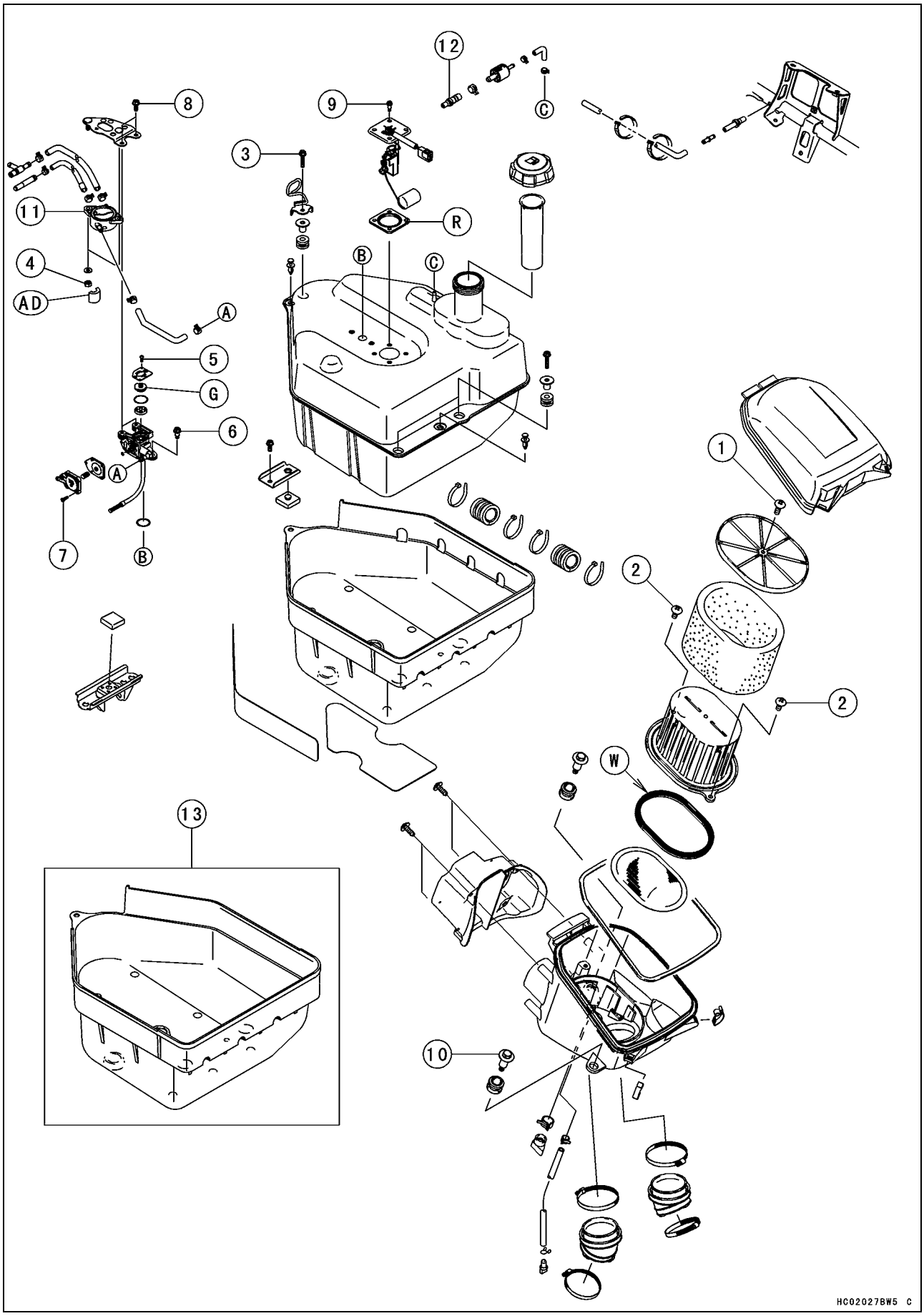

Exploded View

No.	Fastener	Torque			Remarks
		N·m	kgf·m	ft·lb	
1	Element Cover Screw	3.5	0.35	31 in·lb	
2	Element Holder Screws	3.5	0.35	31 in·lb	
3	Clamp Bracket Bolt	9.8	1.0	87 in·lb	
4	Fuel Pump Mounting Nuts	7.8	0.80	69 in·lb	
5	Fuel Tap Plate Screws	0.8	0.08	7 in·lb	
6	Fuel Tap Mounting Bolts	4.9	0.50	43 in·lb	
7	Fuel Tap Cover Screws	9.8	1.0	87 in·lb	
8	Fuel Tap Bracket Bolts	7.8	0.80	69 in·lb	
9	Fuel Level Sensor Mounting Bolts	2.0	0.20	18 in·lb	
10	Air Cleaner Housing Mounting Bolts	8.8	0.90	78 in·lb	

11. Fuel Pump
12. Insert the fuel breather tube end into the hole of the right frame.
13. KVF750-A1, A6F, B1, B6F, C6F Models

AD: Apply adhesive agent.
G: Apply grease.
R: Replacement Part
W: Apply water or soap and water solution.

Specifications

Item	Standard	Service Limit
Throttle Case and Cable		
Throttle Lever Free Play	2 ~ 3 mm (0.08 ~ 0.12 in.)	– – –
Choke Lever and Cable		
Choke Lever Free Play	about 3 mm (0.12 in.)	– – –
Carburetor		
Make/Type	KEIHIN, CVKR-34	– – –
Main Jet:		
Front	#152	– – –
Rear	#158	– – –
Main Air Jet	#70	– – –
Needle Jet	#6	– – –
Jet Needle:		
Front	NFKL	– – –
Rear	NFKL	– – –
Pilot Jet	#38	– – –
Pilot Air Jet	#100	– – –
Pilot Screw	2.0 turns out	– – –
Carburetor Synchronization vacuum	less than 2.7 kPa (2 cmHg) difference between carburetors	– – –
Starter Jet	#82	– – –
Idle Speed	1 150 ±50 r/min (rpm)	– – –
Service Fuel Level:		
Front	20.4 ±1 mm (0.80 ±0.04 in.) below the punch mark	– – –
Rear	19.5 ±1 mm (0.77 ±0.04 in.) below the punch mark	– – –
Float Height	2.9 ±1 mm (0.11 ±0.04 in.)	– – –
Optional Parts:		
Main Jet:		
*Altitude		
0 ~ 1 200 m (0 ~ 3 900 ft):		
Front	#152 (92063-1331)	– – –
Rear	#158 (92063-1344)	– – –
1 200 ~ 2 500 m (3 900 ~ 8 200 ft):		
Front	#145 (92063-1017)	– – –
Rear	#152 (92063-1331)	– – –
2 500 ~ 3 500 m (8 200 ~ 11 500 ft):		
Front	#142 (92063-1016)	– – –
Rear	#148 (92063-1324)	– – –
3 500 ~ 4 500 m (11 500 ~ 14 800 ft):		
Front	#135 (92063-1014)	– – –
Rear	#140 (92063-1013)	– – –
Air Cleaner		
Air Cleaner Element Oil	High-quality foam air filter oil	– – –

*: Refer to pg. 6-27 for high altitude setting in the converter system.

Special Tools

Fuel Level Gauge:
57001-1017

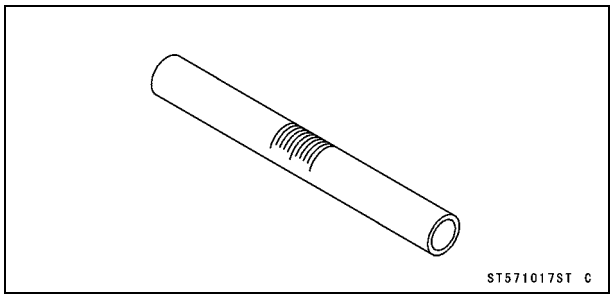

Carburetor Drain Plug Wrench, Hex 3:
57001-1269

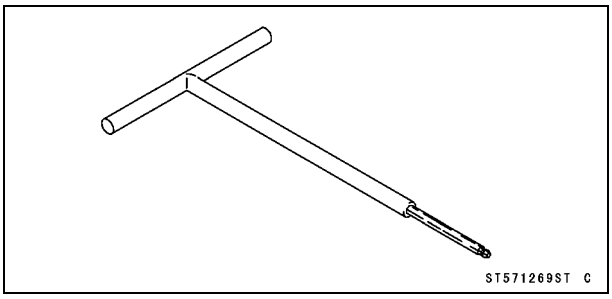

Pilot Screw Adjuster, A:
57001-1239

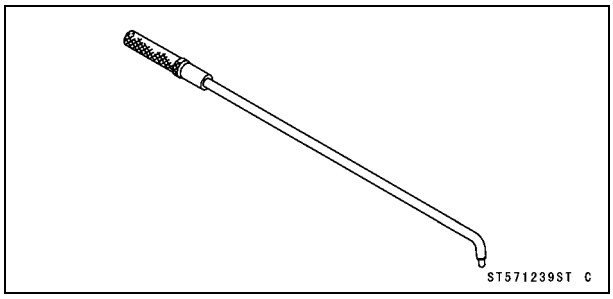

Vacuum Gauge:
57001-1369

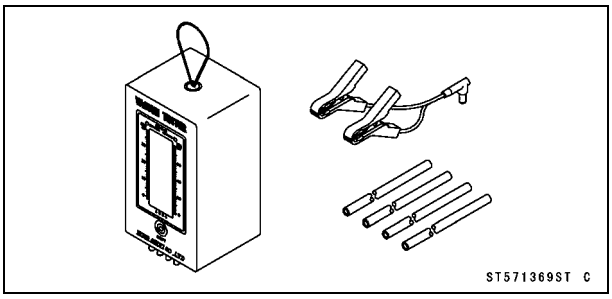

Throttle Lever and Cable

Throttle Lever Free Play Inspection

- Refer to the Throttle Lever Free Play Inspection in the Periodic Maintenance chapter.

Throttle Lever Free Play Adjustment

- Refer to the Throttle Lever Free Play Adjustment in the Periodic Maintenance chapter.

Throttle Case Removal/Disassembly

- Remove the throttle case screws [A] and pull the case open.
- Slide the cable adjuster dust cover out of place.

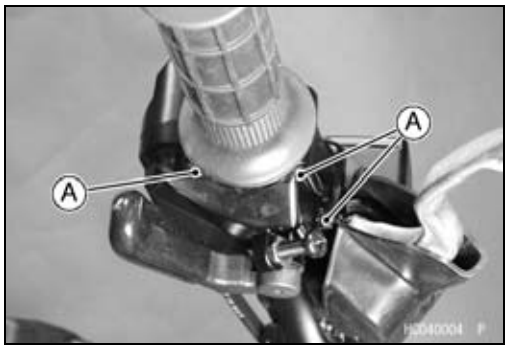

- Remove the rubber cover [A].

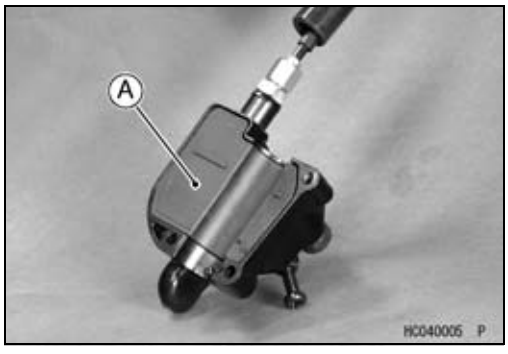

- Pull the cable tip [A] out of the throttle lever catch with the throttle lever opened.
- Loosen the locknut [B] and unscrew the adjuster [C].
- Disassemble the throttle case as follows:

○Remove the throttle lever screw [D], lockwasher, and flat washer, and lift the throttle lever [E] and return spring from the case.

○Pull the throttle control lever [F] out of the case.

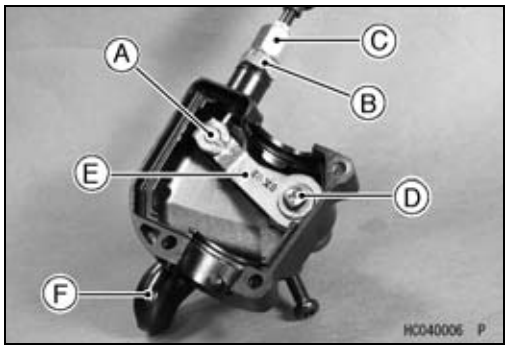

Throttle Case Assembly/Installation

- Lubricate the throttle case and cable before assembly/installation.
- Be certain that the return spring is correctly installed on the throttle lever [A].

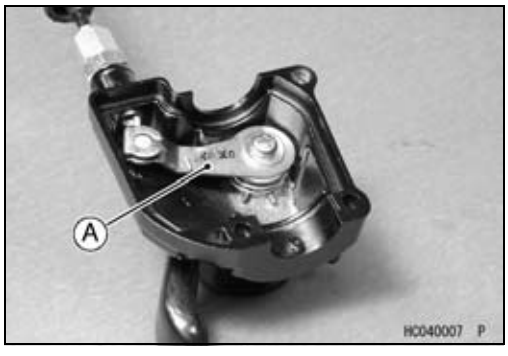

Throttle Lever and Cable

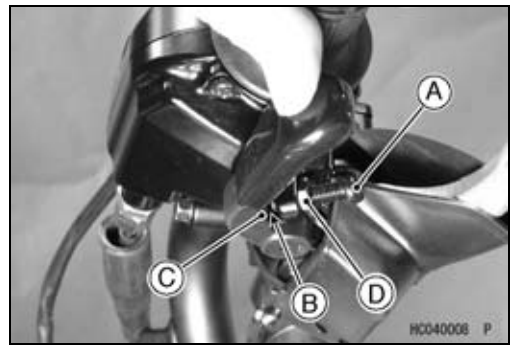

- Swing the throttle control lever so that the carburetor throttle valve is fully open. Turn the throttle limiter screw [A] until it is spaced about 1 mm (0.04 in.) [B] away from the throttle lever stop [C]. Tighten the locknut [D].

NOTE

○*Refer to the Owner's Manual for the function of the throttle limiter and adjustment procedure of it.*

⚠ WARNING

Operation with an improperly assembled throttle case could result in an unsafe riding condition.

- Check the throttle lever free play (see Throttle Lever Free Play Inspection in the Periodic Maintenance chapter).

Throttle Cable Installation

- Lubricate the throttle cable before installation.
- Route the cable correctly according to the Cable, Wire, and Hose Routing in the Appendix chapter.

⚠ WARNING

Operation with an improperly adjusted, incorrectly routed, or damaged cable could result in an unsafe riding condition.

- Check the throttle cable (see Throttle Lever Free Play Inspection in the Periodic Maintenance chapter).

Throttle Case Inspection

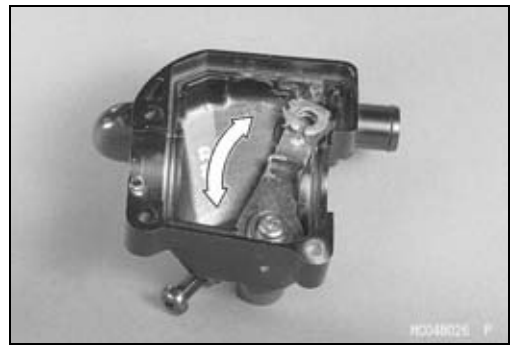

- With the throttle cable disconnected from the throttle lever, the lever should move freely and return smoothly by spring.

★If the lever is heavy, disassemble the throttle case, clean and lubricate the throttle case.

- Examine the lever and case for cracks. Replace the case assembly if it is cracked.

Throttle Cable Lubrication and Inspection

- Whenever the throttle cable is removed or in accordance with the Periodic Maintenance Chart in the Periodic Maintenance chapter, lubricate the cable .
- Refer to the General Lubrication in the Periodic Maintenance chapter.

Choke Lever and Cable

Choke Lever Free Play Inspection

- Refer to the Choke Lever Free Play Inspection in the Periodic Maintenance chapter.

Choke Lever Free Play Adjustment

- Refer to the Choke Lever Free Play Adjustment in the Periodic Maintenance chapter.

Choke Lever and Cable Removal

- Remove the air cleaner housing (see Air Cleaner Housing Removal).
- Remove the carburetor from the carburetor holder (see Carburetor Removal).
- Remove the screws [A] and holder plates [B] from both carburetors.
- Pull out the choke plungers.

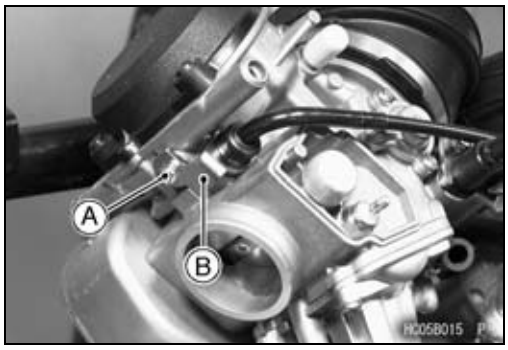

- Hold the choke plunger springs compressed, and free the choke cable lower ends [A] from the plungers [B].

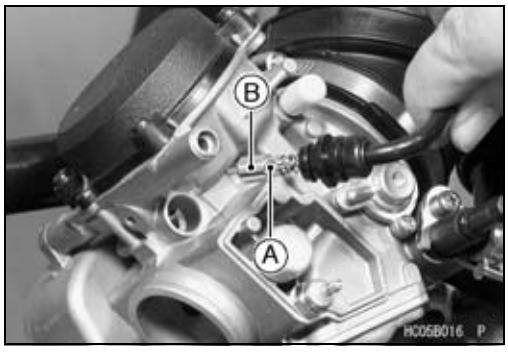

- Remove:
  Choke Lever Mounting Screw [A], Plane Washer, and Wave Washer
  Switch Case Mounting Screws [B]

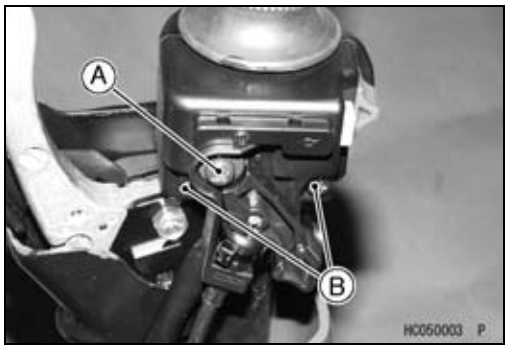

- Free the choke cable upper end [A] from the choke lever [B].

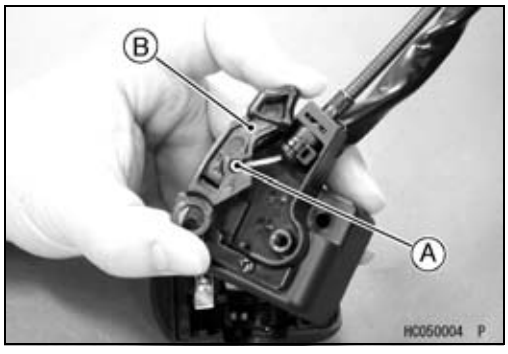

Choke Lever and Cable

- Pull off the retaining clip [A].

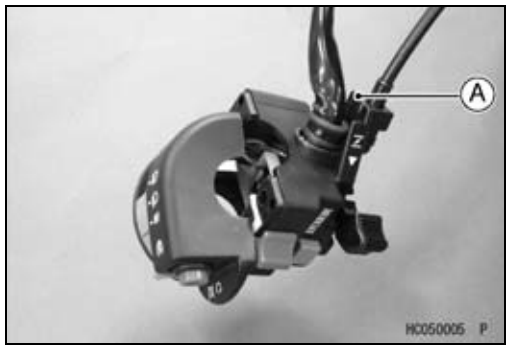

- Fit the cable end [A] in the grommet [B], and free the cable from the switch case.
- Pull the cable out of the vehicle.

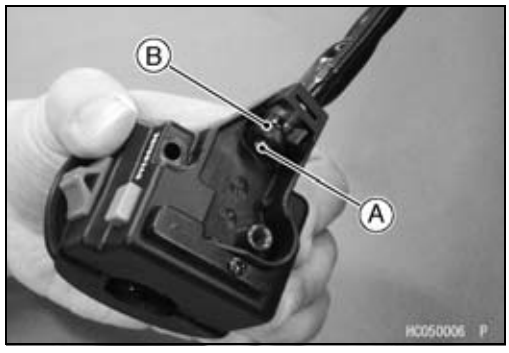

Choke Lever and Cable Installation

- Lubricate the choke cable before installation.
- Install the wave washer, plane washer and screw in that order.
- Route the choke cable according to the Cable, Wire and Hose Routing in the Appendix chapter.

⚠ WARNING

Operation with an incorrectly routed, or damaged cable could result in an unsafe riding condition.

Choke Cable Lubrication and Inspection

- Whenever the choke cable is removed or in accordance with the Periodic Maintenance chart in the Periodic Maintenance chapter, lubricate the cable.
- Refer to the General Lubrication in the Periodic Maintenance chapter.

Carburetor

Idle Speed Inspection

- Refer to the Idle Speed Inspection in the Periodic Maintenance chapter.

Idle Speed Adjustment

- Refer to the Idle Speed Adjustment in the Periodic Maintenance chapter.

Pilot Screw Adjustment

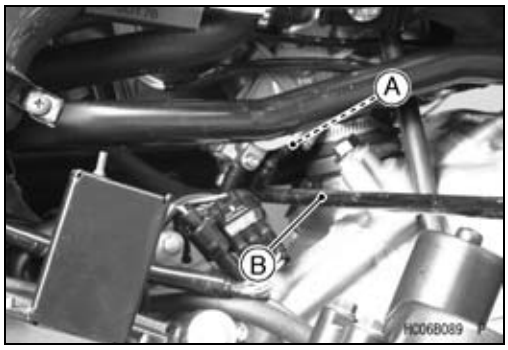

- Adjust the pilot screw if necessary.
- Remove the right side cover (see Right Side Cover Removal in the Frame chapter).

○For United State model (KVF750A6F ~/B6F ~/C6F ~), it is necessary to remove the plug (see Carburetor Disassembly).

- Turn the carburetor pilot screw [A] all the way in until it seats lightly.

Special Tool - Pilot Screw Adjuster, A: 57001-1239 [B]

CAUTION

Do not overtighten the pilot screw, or the carburetor body will be damaged and require replacement.

- Back the pilot screw out the specified number of turns.

Carburetor Pilot Screw Setting
Standard: 2.0 turns out

Service Fuel Level Inspection

⚠ WARNING

Gasoline is extremely flammable and can be explosive under certain conditions. Turn the ignition switch OFF. Do not smoke. Make sure the area is well ventilated and free from any source of flame or sparks; this includes any appliance with a pilot light.

- Park the vehicle on a level surface.
- Remove:
  Side Covers (see Left and Right Side Cover Removal in the Frame chapter)
  Throttle Link Case Cover
  Carburetor Drain Hose

Carburetor

- Connect two suitable hoses [A] to the fuel level gauge [B] and the float chamber of the carburetors.

  Special Tool - Fuel Level Gauge: 57001-1017

- Mark the additional graduation [C] 15 mm (0.59 in.) higher than the top graduation [D].
- Hold the gauge so that the additional graduation is placed slightly higher than the punch mark [E].
  [F] Front Carburetor
  [G] Rear Carburetor
- Run the engine at idle speed.
- Loosen the carburetor drain screw.

  Special Tool - Carburetor Drain Plug Wrench, Hex 3: 57001-1269

- Wait until the fuel level in the gauge settles.
- Hold the gauge vertically and lower it slowly so that the additional graduation aligns with punch mark.

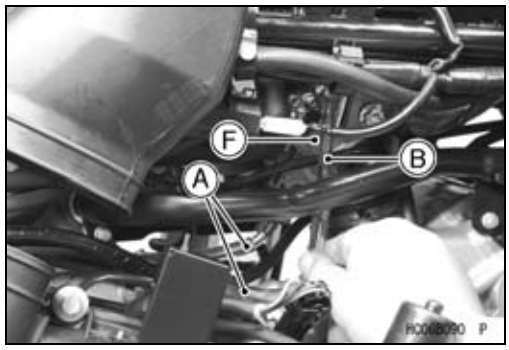

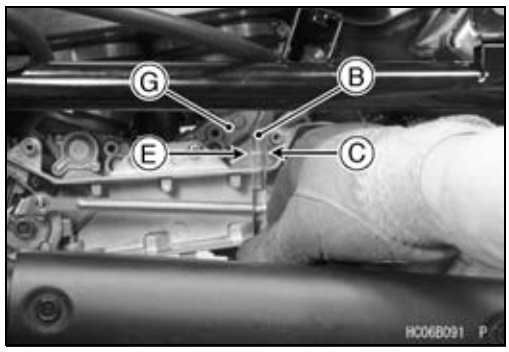

NOTE

○*Do not align the additional graduation on the gauge lower than the punch mark. If it is lowered and then raised, the gauge will show a fluid level that is higher than the actual level, which will require a remeasurement.*

- Read the fuel level [H].

★If the fuel level is incorrect, adjust it.

Fuel Level
Standard:

Front	**20.4 ±1 mm (0.80 ±0.04 in.) below the punch mark**
Rear	**19.5 ±1 mm (0.77 ±0.04 in.) below the punch mark**

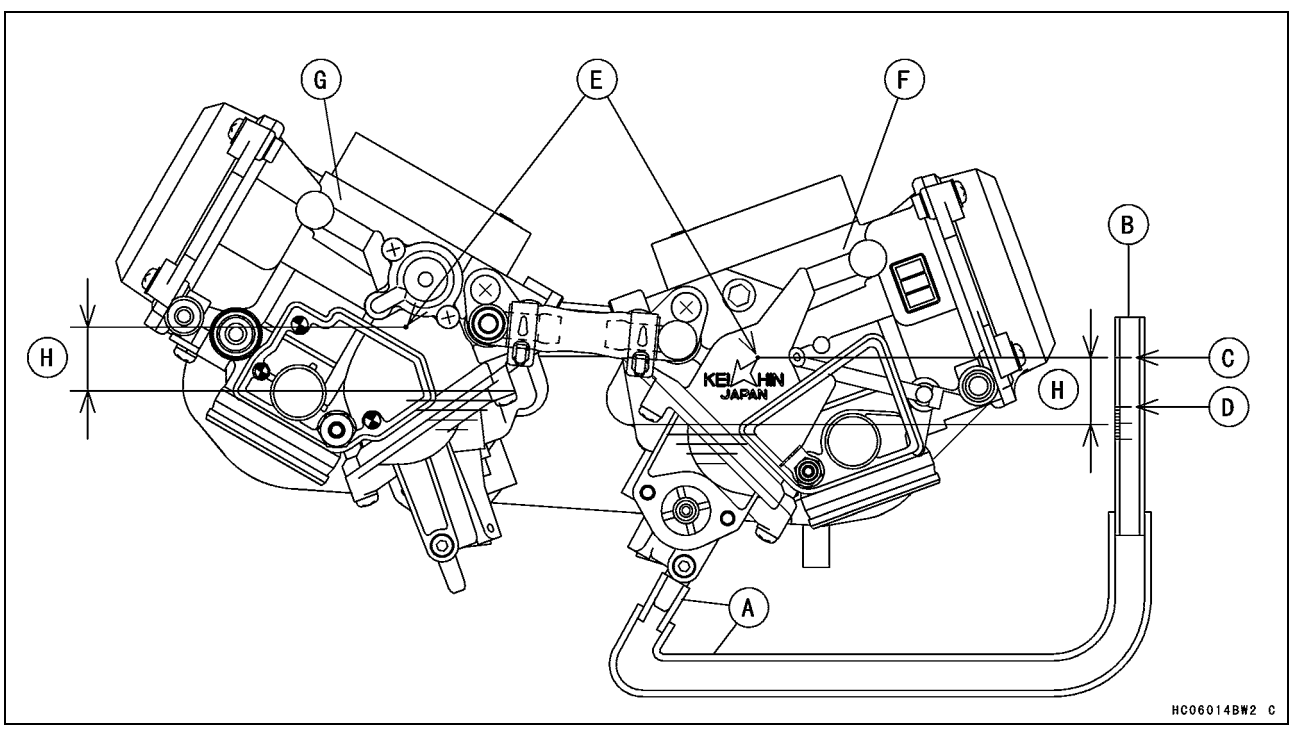

- Stop the engine.
- Tighten the drain screw.
- Repeat the same procedure for the other carburetor.

Carburetor

Service Fuel Level Adjustment

⚠ WARNING

Gasoline is extremely flammable and can be explosive under certain conditions. Turn the ignition switch to OFF. Do not smoke. Make sure the area is well-ventilated and free from any source of flame or sparks; this includes any appliance with a pilot light.

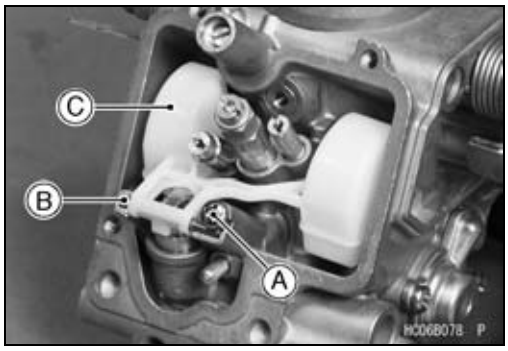

- Remove the carburetors, and drain the fuel.
- Remove the float chamber.
- Remove the screw [A].
- Slide out the pivot pin [B] and remove the float [C].

- Bend the tang [A] on the float arm very slightly to change the float height.

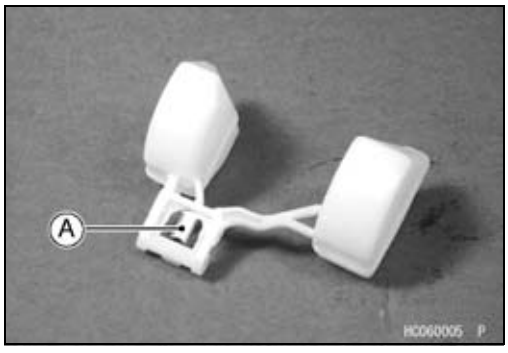

Float Height
Standard: 2.9 ±1 mm (0.11 ±0.04 in.)

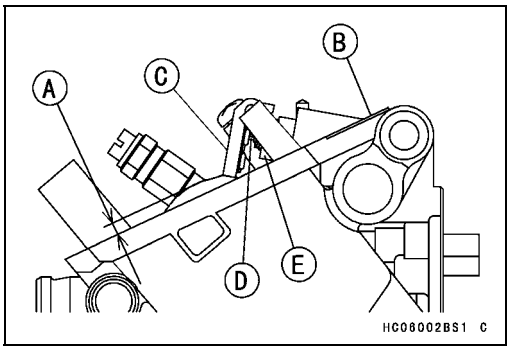

○Measure the float height [A] from the mating surface [B] of float by tilting the carburetor so that the tang of the float [C] just touches the needle rod [D]. At this time, the float valve [E] rod must not be depressed.
○Increasing the float height lowers the fuel level and decreasing the float height raises the fuel level.
- Assemble the carburetor and recheck the fuel level.

★If the fuel level cannot be adjusted by this method, the float or the float valve is damaged.

Carburetor Synchronization Inspection

- Remove:
  Side Covers (see Left and Right Side Cover Removal in the Frame chapter)
  Throttle Link Case Cover
- Check idle speed.
- Remove the front vacuum hose [A] and install the vacuum hose for vacuum gauge.

Carburetor

- Remove the rear vacuum hose [A] and install the vacuum hose for vacuum gauge.

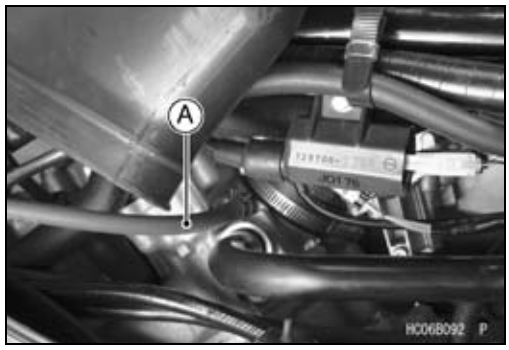

- Connect:
  Vacuum Gauge [A]

  Special Tool - Vacuum Gauge: 57001-1369
- Connect the fuel hose of a suitable fuel tank [B] to the carburetor.
- Start the engine and read the intake vacuum of each carburetor when idling.

★If the vacuum is out of the specified range, adjust it.

Carburetor Synchronization Vacuum
Standard: Less than 2.7 kPa (2 cmHg) difference between carburetors

Carburetor Synchronization Adjustment

- Turn the adjust screw [A] to synchronize the carburetors.

★If the carburetor synchronization cannot be obtained by using the adjusting screw, check for dirt or blockage, and then check the pilot screw settings.

Special Tool - Pilot Screw Adjuster, A: 57001-1239

- Check the carburetor synchronization again.

NOTE

○*Do not turn the pilot screws carelessly during carburetor synchronization. You may cause poor running at low engine speed.*

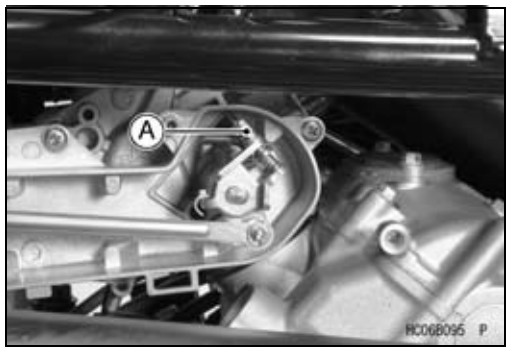

- Check idle speed.

Fuel System Cleanliness Inspection

- Refer to the Fuel System Cleanliness Inspection in the Periodic Maintenance chapter.

Carburetor Removal

⚠ WARNING

Gasoline is extremely flammable and can be explosive under certain conditions. Turn the ignition switch OFF. Do not smoke. Make sure the area is well ventilated and free from any source of flame or sparks; this includes any appliance with a pilot light.

Carburetor

- Remove:
  Air Cleaner Housing (see Air Cleaner Housing Removal)
- Drain the fuel from the carburetors.
- Remove:
  Fuel Hose [A]
  Heater and Ground Lead Connectors [B]

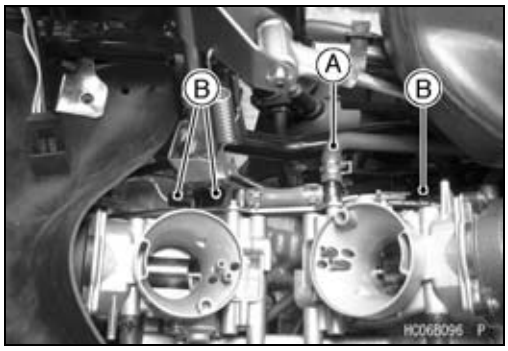

- Remove:
  Screws [A] and Throttle Link Case Cover [B]

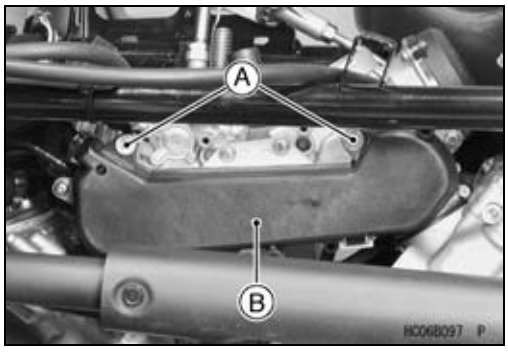

- Remove:
  Locknut [A]
  Throttle Cable Lower End [B]
- Loosen the carburetor clamp screws [C].
- Remove the carburetor out of the frame.

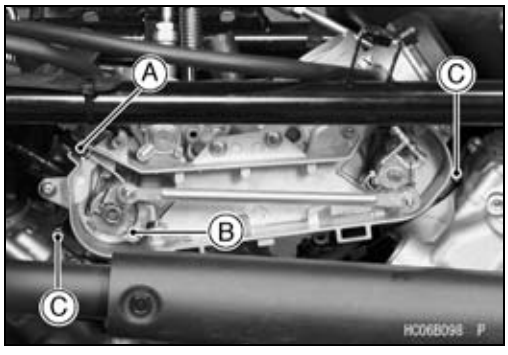

- Remove:
  Screw [A]
  Holder Plate [B]

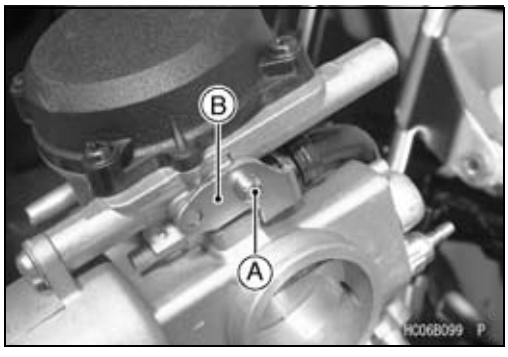

- Remove:
  Choke Plunger [A]

Carburetor

- Remove:
  Screw [A]
  Holder Plate [B]
  Choke Plunger

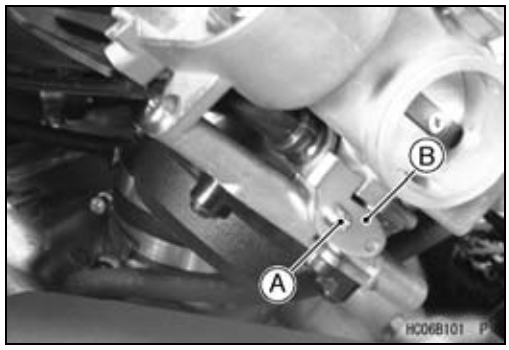

Carburetor Installation

- Confirm the groove of the carburetor holder [A] fits on the projection [B] of the cylinder head.
- Check fuel leakage from the carburetors.

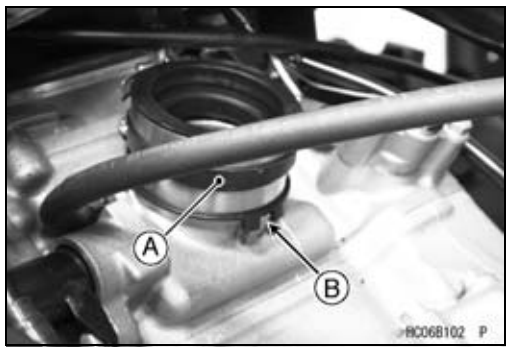

⚠ WARNING

Fuel spilled from the carburetors is hazardous.

- Adjust the idle speed (see Idle Speed Adjustment in the Periodic Maintenance chapter).
- Check the throttle cable (see Throttle Lever Free Play Inspection in the Periodic Maintenance chapter).

Carburetor Disassembly

- Remove the carburetors (see Carburetor Removal).

⚠ WARNING

Gasoline is extremely flammable and can be explosive under certain conditions. Turn the ignition switch to OFF. Do not smoke. Make sure the area is well-ventilated and free from any source of flame or sparks; this includes any appliance with a pilot light.

NOTE

○*The carburetors can be disassembled in the joined state.*

- Remove the pilot screw with spring, washer and O-ring.

○For the United States model (KVF750A6F ~/B6F ~/C6F ~) and Canada model (KVF750A7F/B7F/C7F), remove the pilot screw plug as follows: punch a hole in the plug and pry there with an awl or other suitable tool.

○Turn in the pilot screw and count the number of turns until it seats fully but not tightly, and then remove the screw. This is to set the screw to its original position when assembling.

Carburetor

- Remove the upper chamber cover [A], spring [B], and vacuum piston [C].

CAUTION

During carburetor disassembly, be careful not to damage the diaphragm. Never use a sharp edge to remove the diaphragm.

- Remove the jet needle [D] from the vacuum piston. These can be detached together with the spring seat [E].

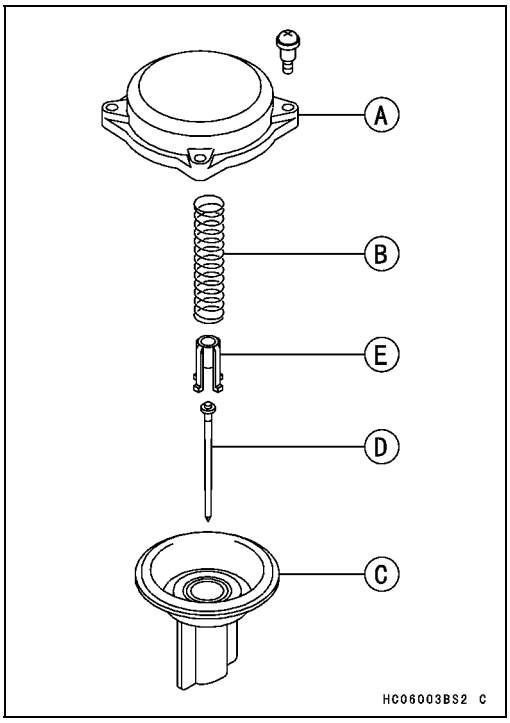

- Remove:
  Screws [A]
  Float Chamber [B]

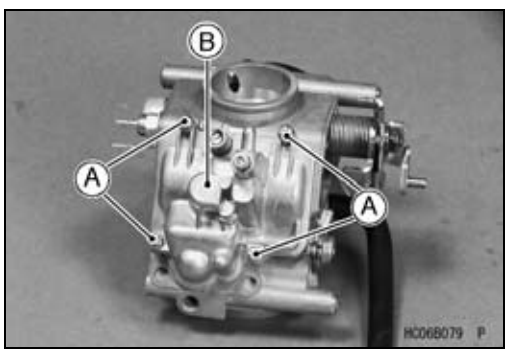

- Remove:
  Screw [A]
  Float Pivot Pin [B], Float [C], and Float Needle Valve
  Pilot Jet [D]
  Main Jet [E]
  Starter Jet [F]

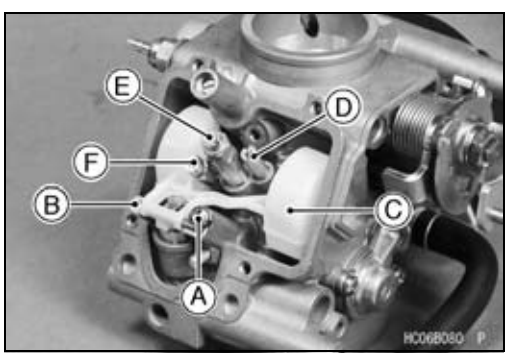

- Remove:
  Screws [A]
  Coasting Enricher Cover [B]

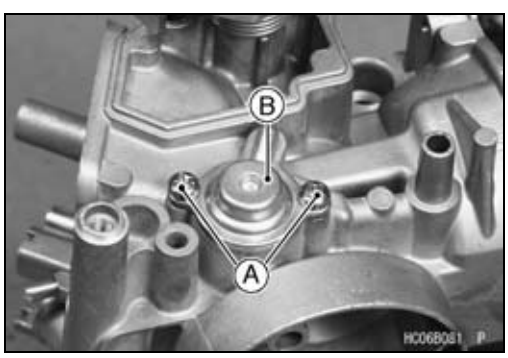

Carburetor

- Remove:
  Diaphragm [A]
  O-ring [B]

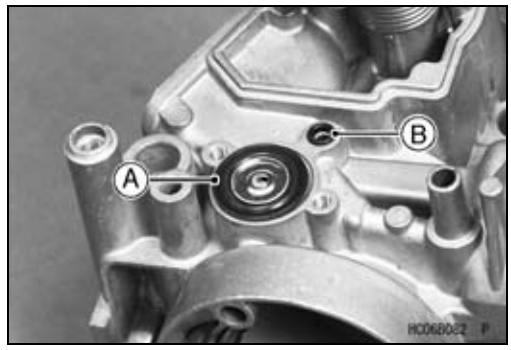

Carburetor Assembly

⚠ WARNING

Fuel spilled from the carburetors is hazardous.

CAUTION

Do not apply force to the jet or overtighten it, or this could damage the jet or the carburetor body, requiring replacement.

- Turn in the pilot screw [A] fully but not tightly, and then back it out the same number of turns counted during disassembly.

○For the United States model (KVF750A6F ~/B6F ~/C6F ~) and Canada model (KVF750A7F/B7F/C7F), install the pilot screw plug as follows: install a new plug [B] in the pilot screw hole of the carburetor body [C], and apply a small amount of a bonding agent [D] to the circumference of the plug to fix the plug.

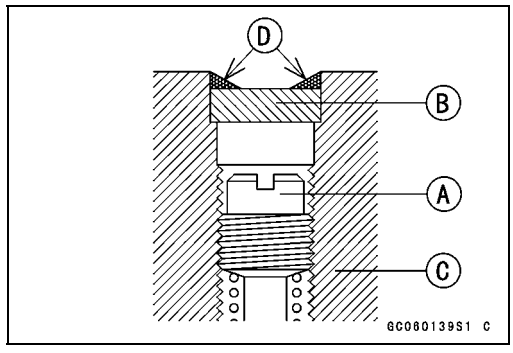

CAUTION

Do not apply too much bonding agent to the plug, or the pilot screw itself may be fixed.

- Before assembling the carburetor, replace the O-rings with new ones.
- Install the float valve needle in the valve seat and hook the needle hanger [A] onto the float tang.
- Insert the float pivot pin [B] into the pivot post and the float.
- Tighten the screw [C].
- Set the float to the standard height (see Service Fuel Level Adjustment).

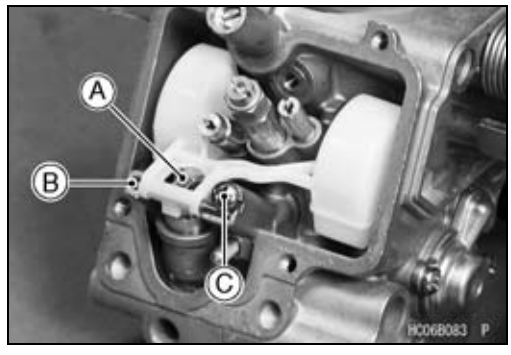

- Insert the jet needle [A] into the hole in the center of the vacuum piston [B], and place the spring seat [C] over the needle.

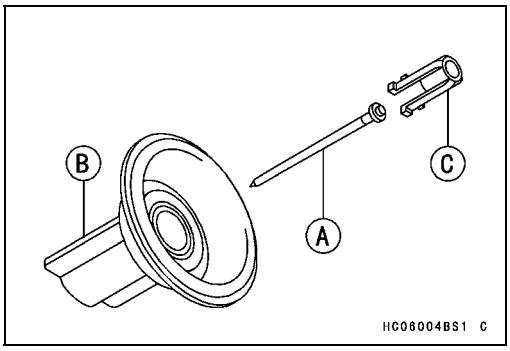

- Slip the needle through the hole in the center of the vacuum piston, and put the spring seat [A] on the top of the needle. Turn the seat so that it does not block the hole [B] at the bottom of the vacuum piston.
- After installing the upper chamber cover, check that the vacuum piston slides up and down smoothly without binding in the carburetor bore.

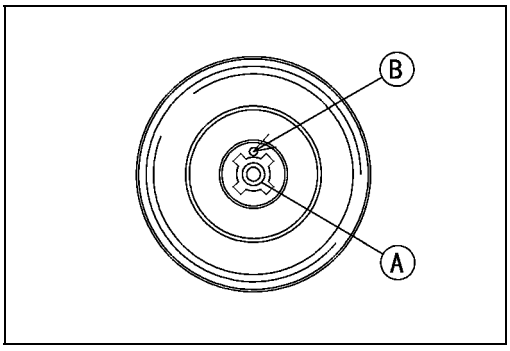

- Fit the projection [A] of the vacuum piston diaphragm in the recess [B] of the body.
- After installing the upper chamber cover, check to make sure that the vacuum piston moves smoothly in the carburetor body.

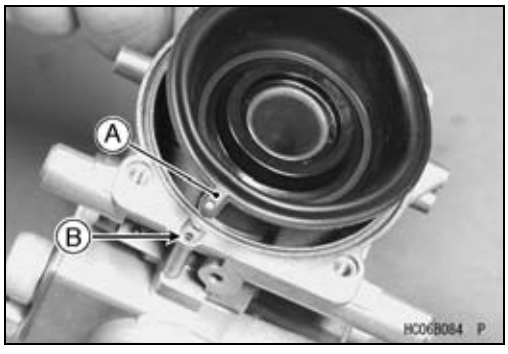

Carburetor Separation

- Remove:
  Carburetor (see Carburetor Removal)
  Screws [A]
  Fuel Hose Fittings [B]

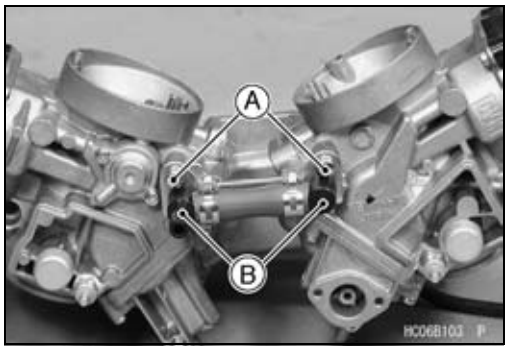

- Remove:
  Cotter Pins [A], Collars and Washers
  Link Arm [B]

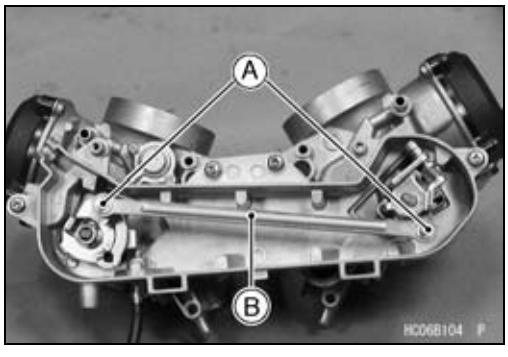

Carburetor

- Remove:
  Link Case Screws [A]
  Link Case [B]
- Separate the Carburetors.

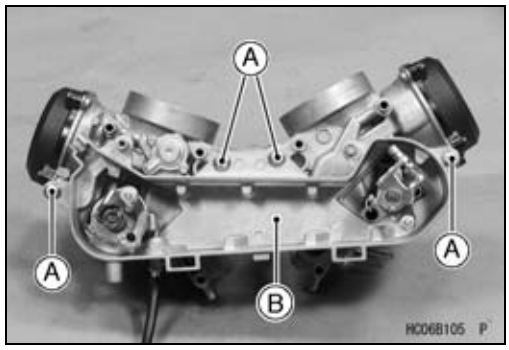

Carburetor Joining

- Install link case and tighten link case screws.
- Apply grease to the link pins [A].
- Install the link arm as shown.
  Washers [B]
  Collars [C]
  Link Arm [D]
  Cotter Pins [E]
- Bend the ends of the cotter pins.
- Install the fuel hose fittings, and tighten the screws.

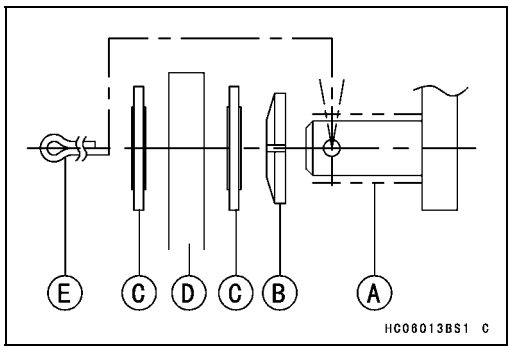

- Visually synchronize the throttle (butterfly) valves.

○Check to see that all throttle valves open and close smoothly without binding when turning the pulley.

○Visually check the clearance [A] between the throttle valve and the carburetor bore in each carburetor.

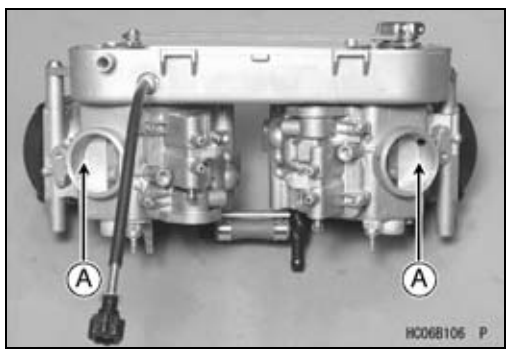

★If there is a difference between two carburetors, turn the balance adjusting screw [A] to obtain the same clearance.

- Install the carburetors (see Carburetor Installation).
- Adjust the synchronization (see Synchronization Adjustment).

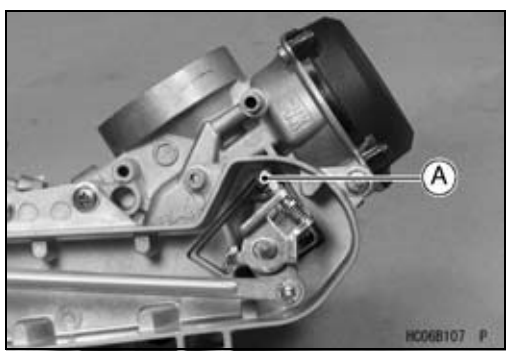

Carburetor Cleaning

⚠ WARNING

Clean the carburetor in a well-ventilated area and take care that there are no sparks or flame anywhere near the working area; this includes any appliance with a pilot light. Because of the danger of highly flammable liquids, do not use gasoline or low-flash point solvents to clean the carburetor.

Carburetor

CAUTION

Do not use compressed air on an assembled carburetor, the float may be crushed by the pressure, and the vacuum piston diaphragm may be damaged.
Remove as many rubber or plastic parts from the carburetor as possible before cleaning the carburetor with a cleaning solution. This will prevent damage or deterioration of the parts.
The carburetor body has plastic parts that cannot be removed. Do not use a strong carburetor cleaning solution which could attack these parts; instead, use a mild high-flash point cleaning solution safe for plastic parts.
Do not use wire or any other hard instrument to clean carburetor parts, especially jets, as they may be damaged.

- Disassemble the carburetor and clean all the metal parts in a carburetor cleaning solution.
- Rinse the parts in water and dry them with compressed air.
- Blow through the air and fuel passages with compressed air.
- Remove the float valve, spray cleaning solution from the valve seating surface into the fuel passage, and clean the strainer (press-fitted) with compressed air [A].
- Assemble the carburetor (see Carburetor Assembly).

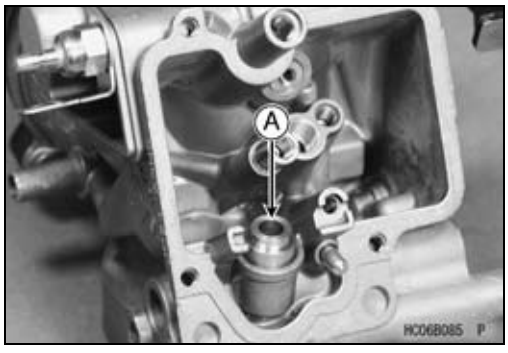

Carburetor Inspection

⚠ WARNING

Gasoline is extremely flammable and can be explosive under certain conditions. Turn the ignition switch OFF. Do not smoke. Make sure the area is well ventilated and free from any source of flame or sparks; this includes any appliance with a pilot light.

- Remove the carburetor (see Carburetor Removal).
- Before disassembling the carburetors, check the fuel level (see Fuel Level Inspection).

- Turn the throttle cable pulley [A] to check that the throttle butterfly valves [B] move smoothly and return back with the spring tension.

★If the throttle valves do not move smoothly, replace the carburetor.

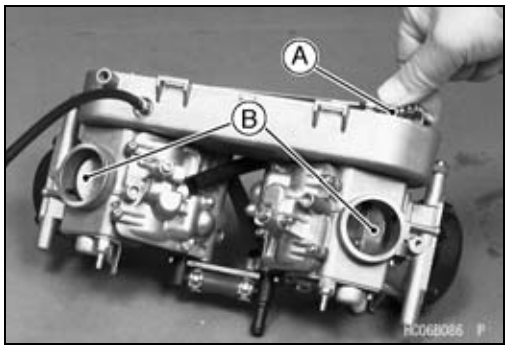

Carburetor

- Disassemble the carburetors (see Carburetor Disassembly).
- Clean the carburetor (see Carburetor Cleaning).
- Check the vacuum piston diaphragm [A], and the O-rings [B] on the float bowl, pilot screw, coasting enricher, and choke plunger cap.

★If any of the diaphragm or O-rings are not in good condition, replace them.

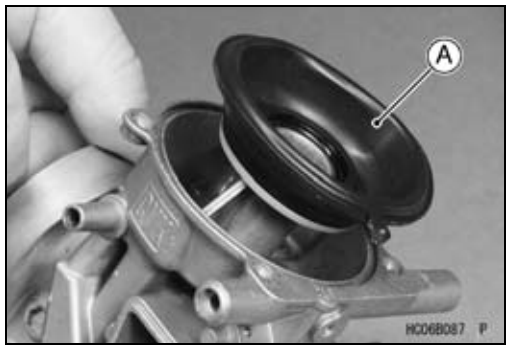

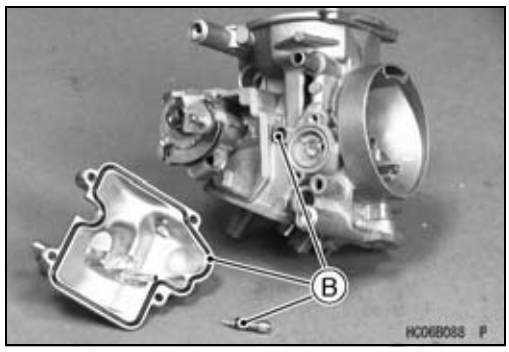

- Check the plastic tip [A] of the float valve needle. It should be smooth, without any grooves, scratches, or tears.

★If the plastic tip is damaged [C], replace the float valve [B].

- Push the rod [D] in the other end of the float valve needle and then release it [E].

★If it does not spring out, replace the float valve.

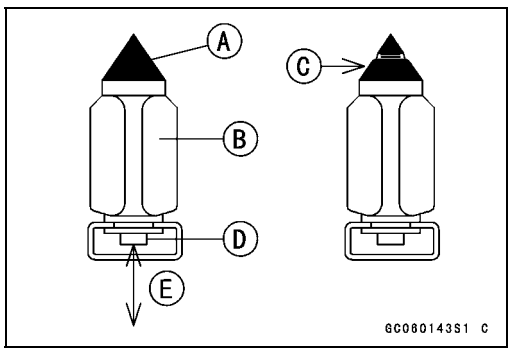

- Check the tapered portion [A] of the pilot screw [B] for wear or damage.

★If the pilot screw is worn or damaged on the tapered portion, it will prevent the engine from idling smoothly. Replace it.

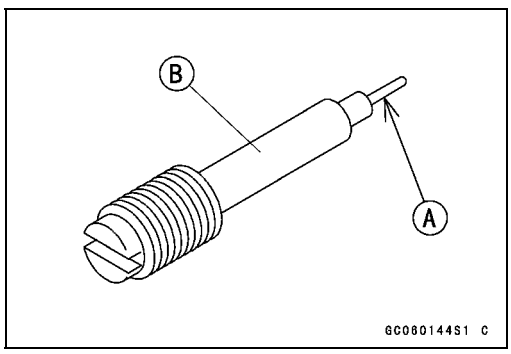

- Check that the vacuum piston moves smoothly in the carburetor body. The surface of the piston must not be excessively worn.

★If the vacuum piston does not move smoothly, or if it is very loose in the carburetor body, replace both the body and the vacuum piston.

Air Cleaner

Air Cleaner Element Removal

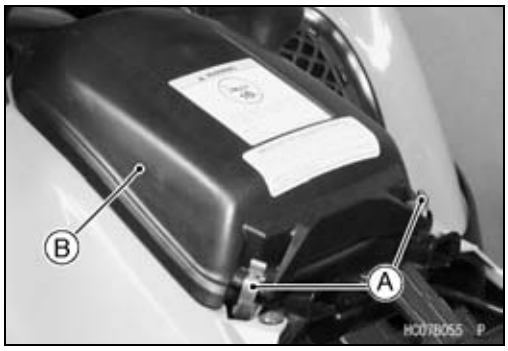

- Remove:
  Seat (see Seat Removal in the Frame chapter)
  Clips [A]
  Air Cleaner Housing Cap [B]

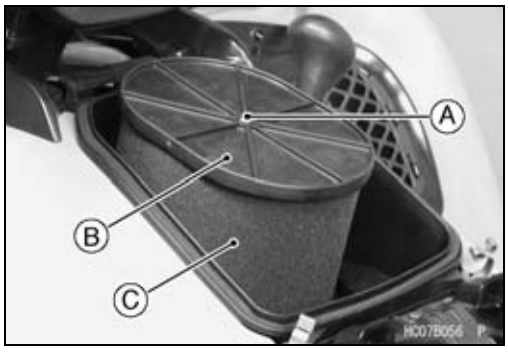

- Remove:
  Element Cover Screw [A]
  Element Cover [B]
  Element [C]
- After removing the element, stuff pieces of lint-free, clean cloth into the air cleaner ducts to keep dirt out of the carburetor and engine.

⚠ WARNING

If dirt or dust is allowed to pass through into the carburetors, the throttle may become stuck, possibly causing an accident.

CAUTION

If dirt gets through into the engine, excessive engine wear and possibly engine damage will occur.

Air Cleaner Element Installation

- Install:
  Element
  Element Cover
- Tighten:

Torque - Element Cover Screw: 3.5 N·m (0.35 kgf·m, 31 in·lb)

Air Cleaner Element Cleaning and Inspection

- Refer to the Air Cleaner Element Cleaning and Inspection in the Periodic Maintenance chapter.

Air Cleaner Housing Removal

- Remove:
  Side Covers (see Left and Right Side Cover Removal in the Frame chapter)
  Air Cleaner Housing Cap
  Air Cleaner Element (see Air Cleaner Element Removal)

Air Cleaner

- Remove:
  Screws [A]
  Element Holder [B]
  Spark Arrester [C]

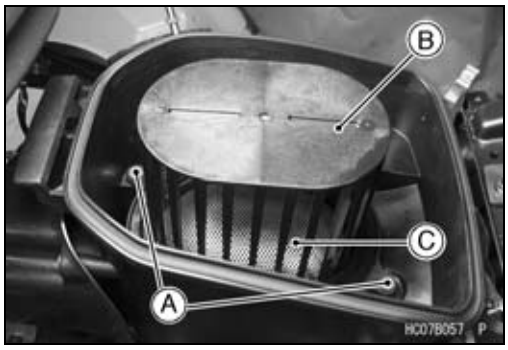

- Remove:
  Screw [A]
  Air Intake Duct [B]
  Air Cleaner Housing Bolt [C]

- Remove:
  Air Cleaner Housing Bolt [A]

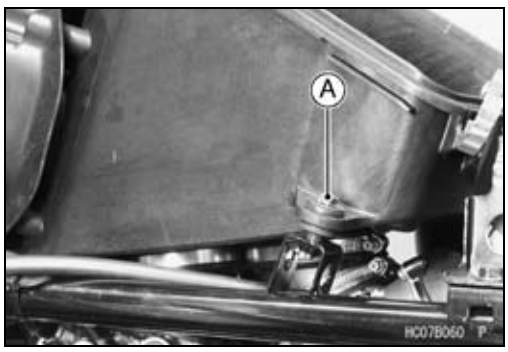

- Loosen the clamp screws [A].

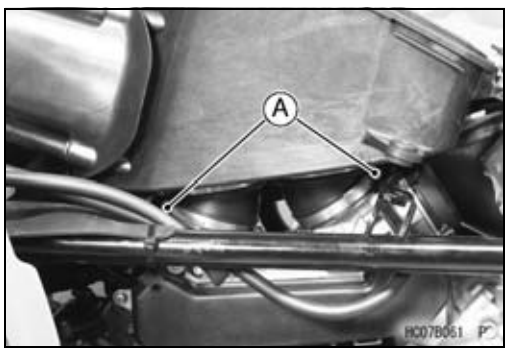

- Remove:
  Breather Hose [A]

Air Cleaner

- Remove:
  Screw [A]
  Carburetor Breather Tank [B]
  Air Cleaner Housing [C]

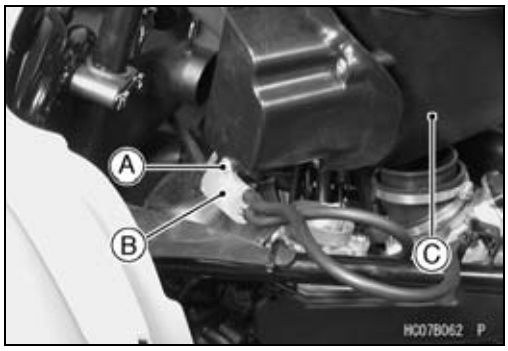

Air Cleaner Housing Installation

- Fit the projection [A] of the housing in the groove [B] of the joint duct [C] (front and rear), and tighten the clamp screws.

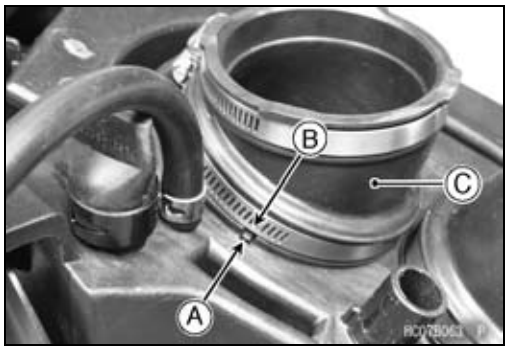

- Install:
  Dust Seal [A]
  Air Cleaner Housing Cover [B]
  [C] Inside

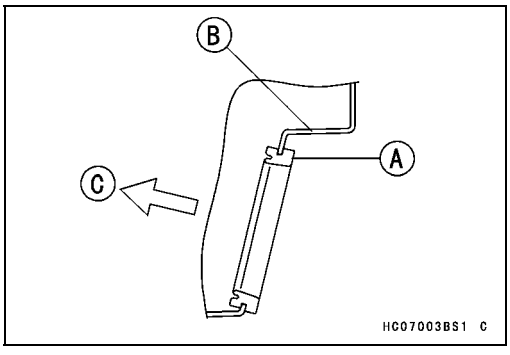

- Install the air cleaner housing and joint duct on the carburetor.
- Install:
  Breather Hose and Clamp
  Carburetor Breather Tank
- Fit the joint duct on the fitting of the carburetor securely and tighten the clamp screws.
- Tighten the air cleaner housing bolts.

- Install the spark arrester [A] so that the swelling faces upward.

Air Cleaner

- Apply the soap and water solution over the trim seal [A].

- Install:
  Element Holder
- Tighten:

  Torque - Element Holder Screws: 3.5 N·m (0.35 kgf·m, 31 in·lb)
- Install:
  Element (see Air Cleaner Element Installation)

Fuel Tank

Fuel Tank Removal

- Remove:
  Electrical Parts Case (see Electrical Parts Case Removal in the Frame chapter)
  Rear Fender (see Rear Fender Removal in the Frame chapter)
  Storage Case [A] (Optional Part)
  Check Valve Hose [B]

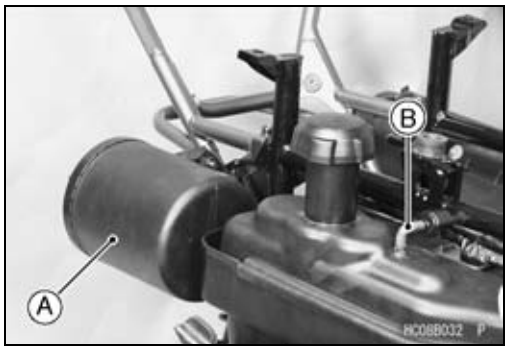

- Remove:
  Two Right Footboard Bolts [A]

- Insert a thin driver [A] in the clamp [B] to clear its stopper, and slide the clamp forward.

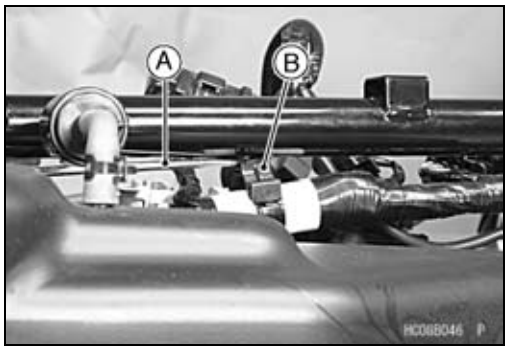

- Move the main harness [A] inside as shown.
- Remove:
  Fuel Level Sensor Lead Connector [B]
  Vacuum Hoses [C]
  Fuel Hose [D]
  Bolts [E]
  Damper Bracket Bolt [F]
  Damper Bracket [G]

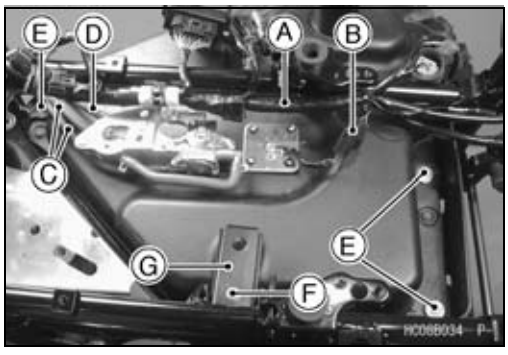

- Remove:
  Fuel Tank [A] with Tank Case [B]

Fuel Tank

Fuel Tank Installation

- Check the insulators [A] on the tank case.

★If the insulators are damaged or deteriorated, replace them.

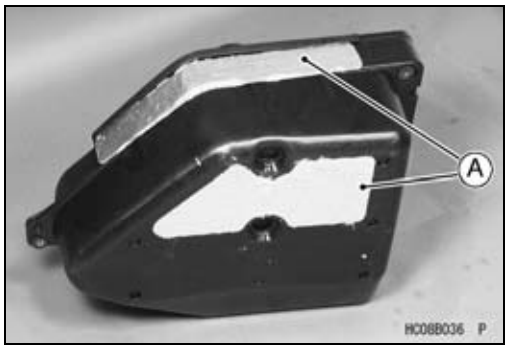

- Check the rubber dampers [A] on the frame as shown.

★If the dampers are damaged or deteriorated, replace them.

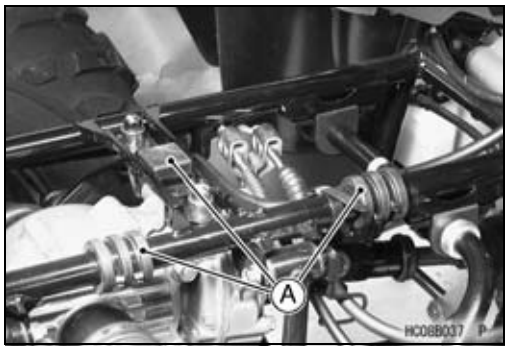

- Install the fuel tank with case, and tighten the bolts.
- Check the damper [A] on the damper bracket [B].

★If the damper is damaged or deteriorated, replace it.

- Tighten the damper bracket bolt.

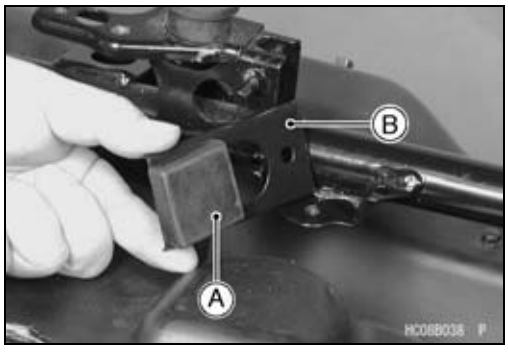

- Install the check valve so that the arrow [A] faces fuel tank.
  [B] Black Color
  [C] Blue Color

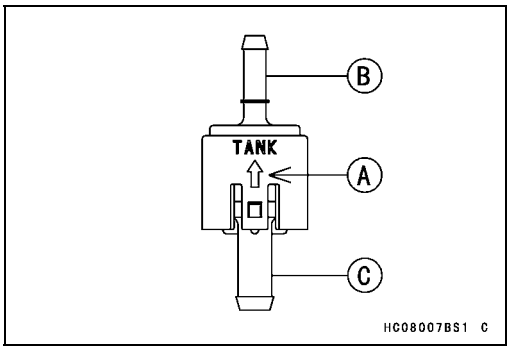

- Install:
  Hose [A]
  Clamps [B]

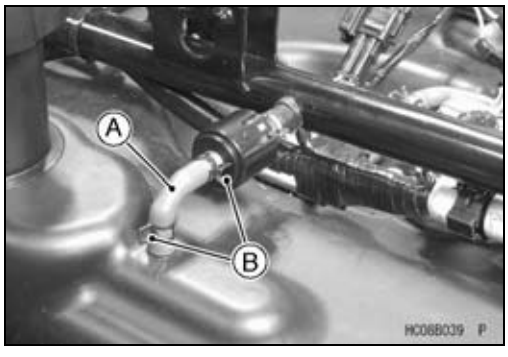

- Install:
  Vacuum Hose [A] and Clamp [B]
  Fuel Level Sensor Lead Connector
- Install the removed parts.

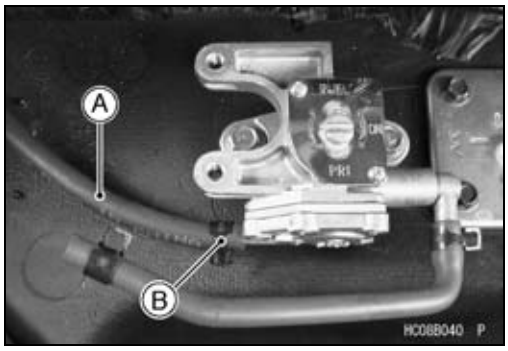

Fuel Tank Cleaning

- Remove the fuel tank and drain it (see Fuel Tank Removal).
- Pour some high-flash point solvent into the fuel tank and shake the tank to remove dirt and fuel deposits.

⚠ WARNING

Clean the tank in a well-ventilated area, and take care that there is no spark or flame anywhere near the working area; this includes any appliance with a pilot light. Because of the danger of highly flammable liquids, do not use gasoline or low-flash point solvents to clean the tank. A fire or explosion could result.

- Pour the solvent out the tank.
- Dry the tank with compressed air.
- Install the fuel tank (see Fuel Tank Installation).

Fuel Tap Removal

- Remove:
  Fuel Pump (see Fuel Pump Removal)
  Fuel Tap Mounting Bolts [A]
  Vacuum Hose [B]
  Fuel Tap [C]

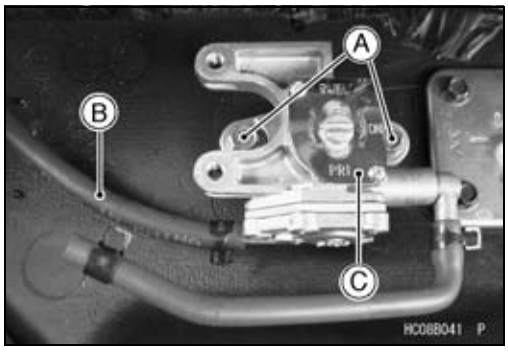

Fuel Tap Installation

- Be sure the O-ring [A] is in good condition to prevent leakage.

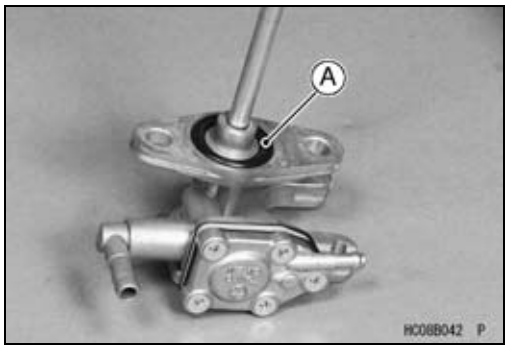

Fuel Tank

- Connect the fuel hoses to the fuel tap as follows.
  Vacuum Hose [A]
  Fuel Pump Hose [B]
- Be sure to clamps [C] the fuel hoses to prevent leakage.

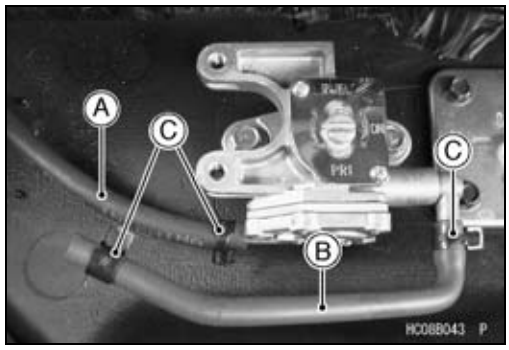

Fuel Tap Inspection

- Check the fuel tap filter screen [A] for any breaks or deterioration.

★If the filter screen has any break or is deteriorated, it may allow dirt to reach the carburetor, causing poor running. Replace the fuel tap.

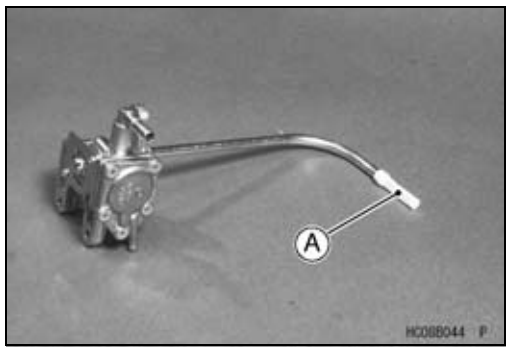

★If the fuel tap leaks, replace the damaged gasket [A] or O-rings [B].

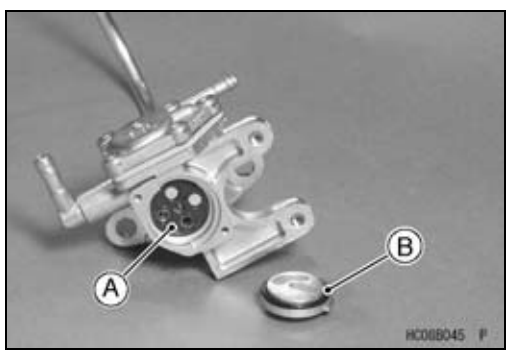

- Apply grease to the lever [A].

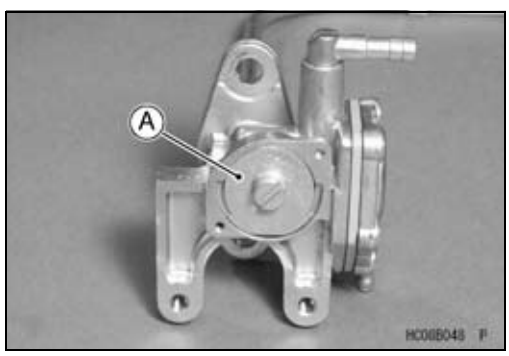

- Tighten:

  Torque - Fuel Tap Plate Screws [A]: 0.8 N·m (0.08 kgf·m, 7 in·lb)

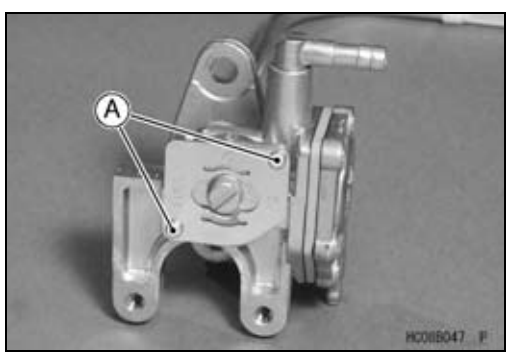

Fuel Tank

Fuel Tap Cleaning

- Remove:
  Fuel Tap (see Fuel Tap Removal)
- Clean the fuel tap filter screen in a high-flash point solvent.

⚠ WARNING

Clean the tap in a well-ventilated area, and take care that there is no spark or flame anywhere near the working area; this includes any appliance with a pilot light. Because of the danger of highly flammable liquids, do not use gasoline or low-flash point solvents to clean the tap. A fire or explosion could result.

- Pour high-flash point solvent through the tap in PRI position.
- Dry the fuel tap with compressed air.
- Install the fuel tap (see Fuel Tap Installation).

Fuel Pump

Fuel Pump Removal

CAUTION

Never drop the fuel pump, especially on a hard surface. Such a shock to the pump can damage it.

⚠ WARNING

Gasoline is extremely flammable and can be explosive under certain conditions. Make sure the area is well-ventilated and free from any source of flame or sparks; this includes any appliance with a pilot light. Do not smoke. Turn the ignition switch OFF. Disconnect the battery (–) terminal.
To make fuel spillage minimum, draw the fuel out from the fuel tank when the engine is cold. Be prepared for fuel spillage; any spilled fuel must be completely wiped up immediately.

- Remove:
  Electrical Parts Case (see Electrical Parts Case Removal in the Frame chapter)
  Bolts [A]
  Fuel Hose [B]

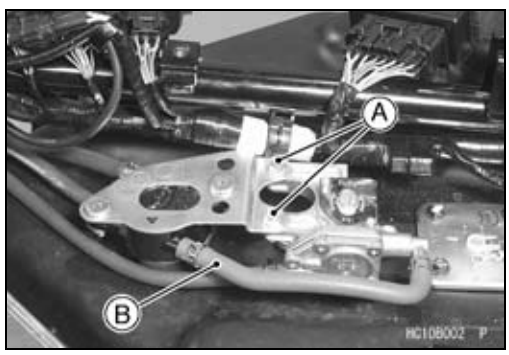

- Remove:
  Vacuum Hose [A]
  Fuel Hose [B]

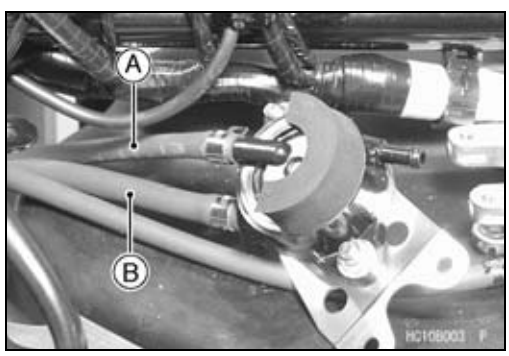

- Remove:
  Nuts [A] and Washers
  Fuel Pump [B]

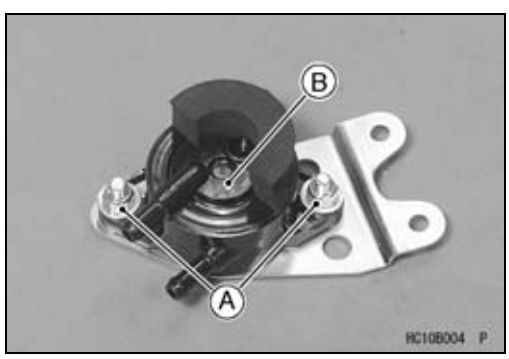

Fuel Pump

Fuel Pump Installation

- Install:
  Bracket [A]
  Fuel Pump [B]
  Washers [C] and Nuts [D]

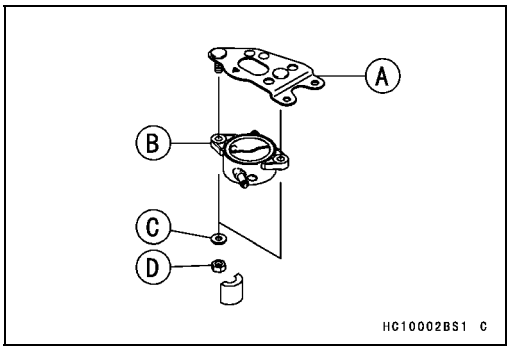

- Install:
  Vacuum Hose [A]
  Fuel Hose (Carburetor Side) [B]
  Clamps [C]

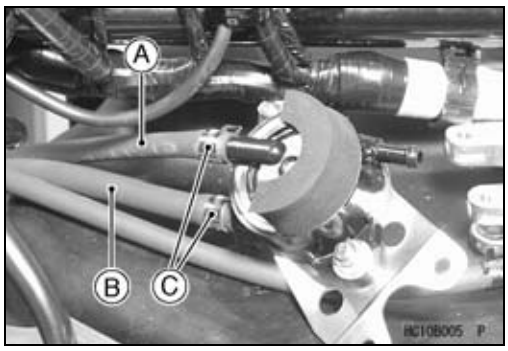

- Install:
  Fuel Hose (Fuel Tap Side) [A]
  Clamp [B]
  Bolts [C]
  Removed Parts

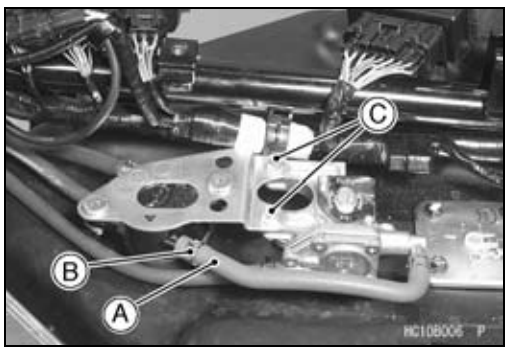

Fuel Pump Inspection

- Remove the fuel pump (see Fuel Pump Removal).

★If the hose connection areas [A] of the fittings are damaged, replace the fuel pump.

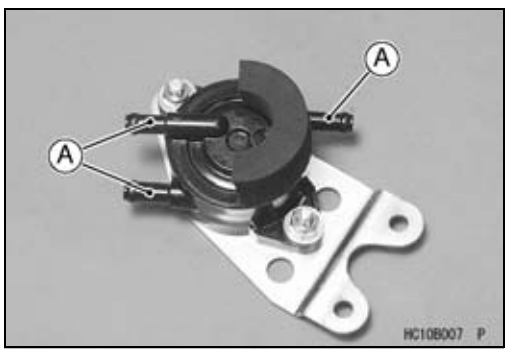

- Blow the air to the outlet fitting [A], and make sure that the blown air does not flow from the inlet fitting [B].

★If the fuel pump does not operate as described, replace it with a new one.

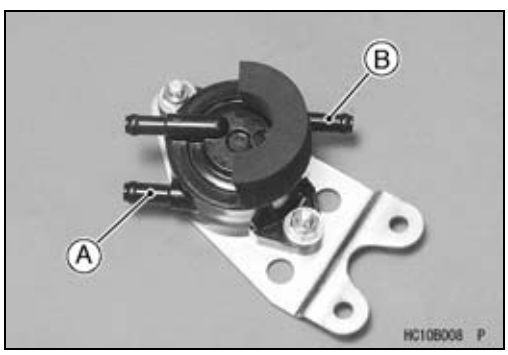

Fuel Pump

- Blow the air to the inlet fitting [A], and make sure that the blown air flow from the outlet fitting [B].

★If the fuel pump does not operate as described, replace it with a new one.

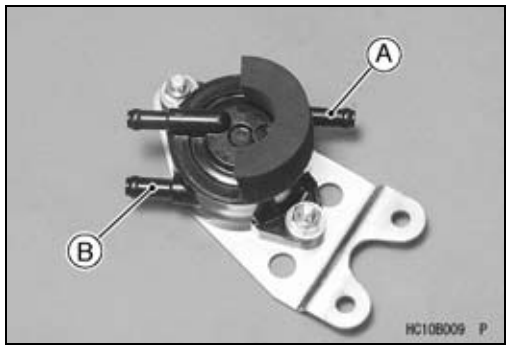

Cooling System

Table of Contents

Exploded View

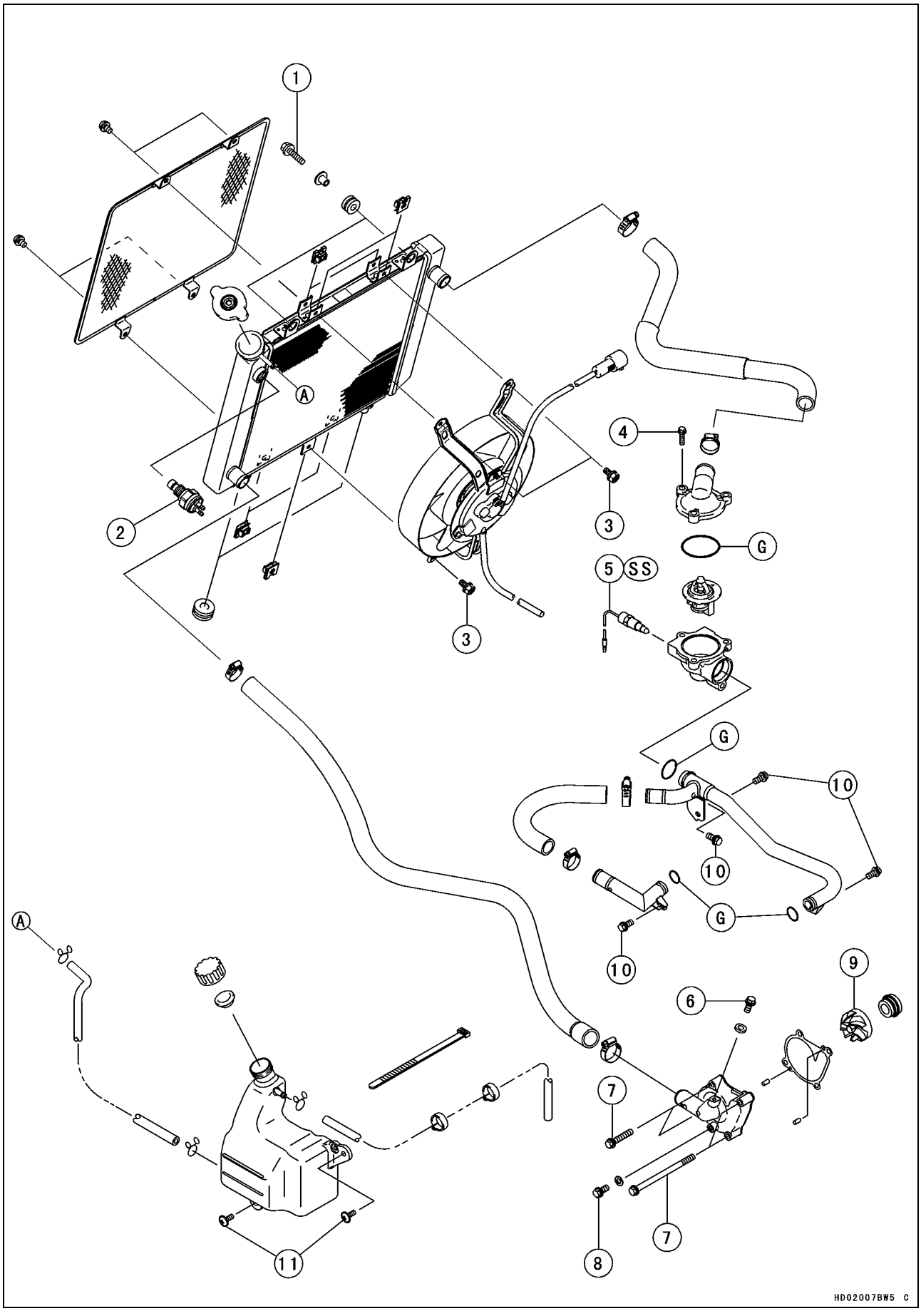

Exploded View

No.	Fastener	Torque			Remarks
		N·m	kgf·m	ft·lb	
1	Radiator Mounting Bolts	8.8	0.90	78 in·lb	
2	Radiator Fan Switch	18	1.8	13	
3	Radiator Fan Assembly Bolts	4.9	0.50	43 in·lb	
4	Thermostat Housing Cover Bolts	8.8	0.90	78 in·lb	
5	Water Temperature Switch	7.8	0.80	69 in·lb	SS
6	Air Bleeder Bolt	8.8	0.90	78 in·lb	
7	Water Pump Cover Bolts	8.8	0.90	78 in·lb	
8	Coolant Drain Plug	8.8	0.90	78 in·lb	
9	Water Pump Impeller	7.8	0.80	69 in·lb	
10	Water Pipe Mounting Bolts	8.8	0.90	78 in·lb	
11	Reserve Tank Mounting Screws	4.0	0.40	35 in·lb	

G: Apply grease.
SS: Apply silicone sealant (Kawasaki Bond: 56019-120).

Coolant Flow Chart

Permanent type antifreeze is used as a coolant to protect the cooling system from rust and corrosion. When the engine starts, the water pump (coupled with the oil pump) turns and the coolant circulates.

The thermostat is a wax pellet type which opens or closes with coolant temperature changes. The thermostat continuously changes its valve opening to keep the coolant temperature at the proper level. When coolant temperature is below 67°C (153°F), the thermostat closes so that the coolant flow is restricted through the air bleeder hole, causing the engine to warm up more quickly. When coolant temperature is more than 69.5 ~ 72.5°C (157 ~ 162°F), the thermostat opens and the coolant flows. When the coolant temperature goes up beyond 96 ~ 100°C (205 ~ 212°F), the radiator fan switch conducts to operate the radiator fan. The radiator fan draws air through the radiator core when there is not sufficient air flow such as at low speeds. This increases up the cooling action of the radiator. When the temperature is below 91 ~ 95°C (195 ~ 203°F), the fan switch opens and the radiator fan stops.

In this way, this system controls the engine temperature within narrow limits where the engine operates most efficiently even if the engine load varies.

The system is pressurized by the radiator cap to suppress boiling and the resultant air bubbles which can cause engine overheating. As the engine warms up, the coolant in the radiator and the water jacket expands. The excess coolant flows through the radiator cap and hose to the reserve tank to be stored there temporarily. Conversely, as the engine cools down, the coolant in the radiator and the water jacket contract, and the stored coolant flows back to the radiator from the reserve tank.

The radiator cap has two valves. One is a pressure valve which holds the pressure in the system when the engine is running. When the pressure exceeds 93 ~ 123 kPa (0.95 ~ 1.25 kgf/cm², 14 ~ 18 psi), the pressure valve opens and releases the pressure to the reserve tank. As soon as pressure escapes, the valve closes, and keeps the pressure at 93 ~ 123 kPa (0.95 ~ 1.25 kgf/cm², 14 ~ 18 psi). When the engine cools down, another small valve (vacuum valve) in the cap opens. As the coolant cools, the coolant contracts to form a vacuum in the system. The vacuum valve opens and allows the coolant from the reserve tank to enter the radiator.

Coolant Flow Chart

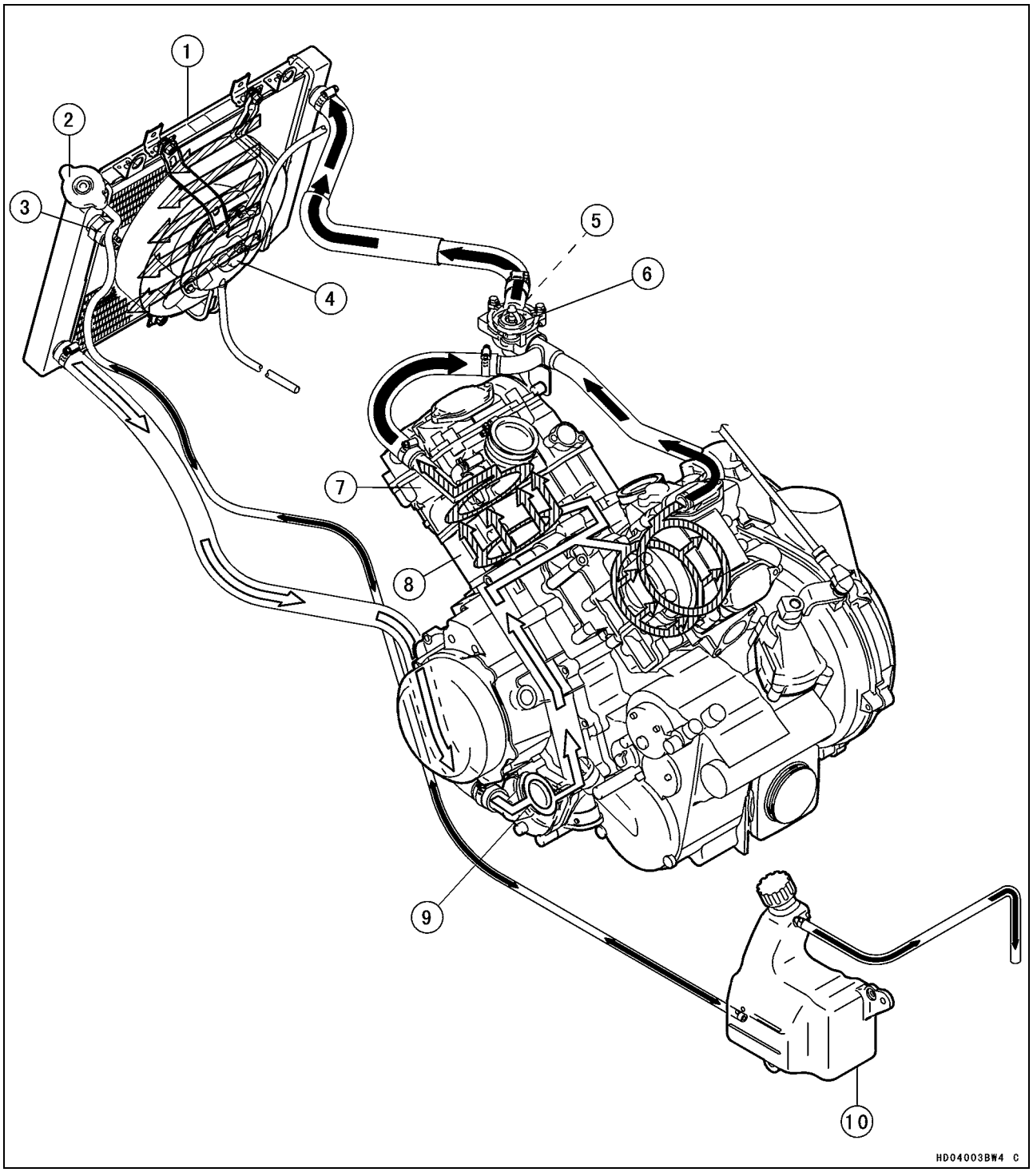

1. Radiator
2. Radiator Cap
3. Radiator Fan Switch
4. Radiator Fan
5. Water Temperature Switch
6. Thermostat
7. Cylinder
8. Cylinder Head
9. Water Pump
10. Reserve Tank

Black Painted Arrow: Hot Coolant
White Painted Arrow: Cold Coolant

Specifications

Item	Standard	Service Limit
Coolant Provided when Shipping		
Type	Permanent type of antifreeze (soft water and ethylene glycol plus corrosion and rust inhibitor chemicals for aluminum engines and radiators)	– – –
Color	Green	– – –
Mixed Ratio	Soft water 50%, coolant 50%	– – –
Freezing Point	−35°C (−31°F)	– – –
Total Amount	2.2 L (2.3 US qt) (reserve tank full level including radiator and engine)	– – –
Radiator Cap		
Relief Pressure	93 ~123 kPa (0.95 ~ 1.25 kgf/cm², 14 ~ 18 psi)	– – –
Thermostat		
Valve Opening Temperature	69.5 ~ 72.5°C (157 ~ 162°F)	– – –
Valve Full Opening Lift	8 mm or more @85°C (185°F)	– – –

Special Tools & Sealant

Bearing Driver Set:
57001-1129

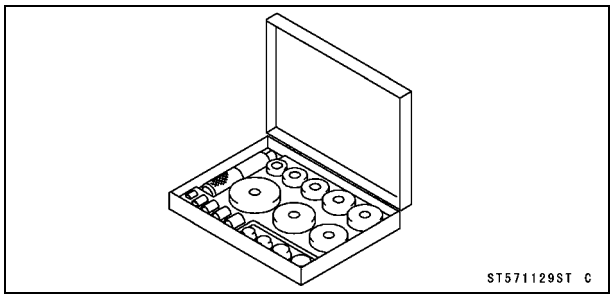

Bearing Remover Head, ϕ10 × ϕ12:
57001-1266

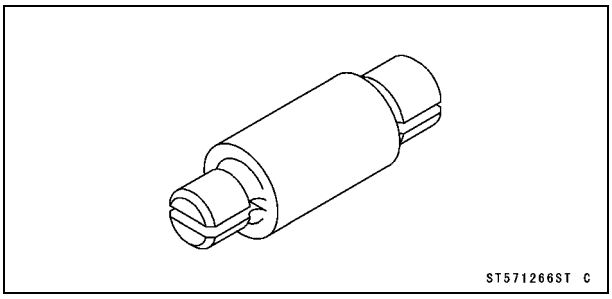

Bearing Remover Shaft, ϕ9:
57001-1265

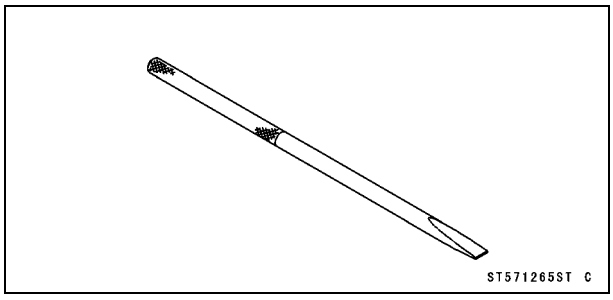

Kawasaki Bond (Silicone Sealant):
56019-120

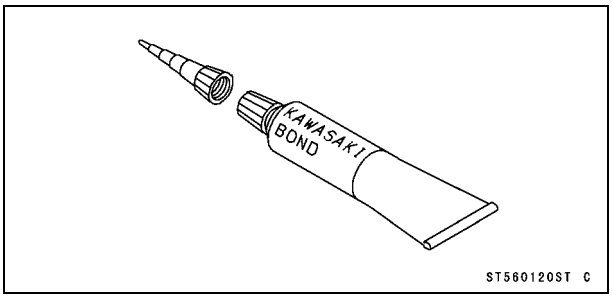

Coolant

Coolant Deterioration Inspection

- Visually inspect the coolant in the reserve tank [A].

★If whitish cotton-like wafts are observed, aluminum parts in the cooling system are corroded. If the coolant is brown, iron or steel parts are rusting. In either case, flush the cooling system.

★If the coolant gives off an abnormal smell, check for cooling system leak. It may be caused by exhaust gas leaking into the cooling system.

Coolant Level Inspection

NOTE

○*Check the level when the engine is cold (room or ambient temperature).*

- Check the coolant level in the reserve tank with the vehicle held perpendicularly.
  Reserve Tank [A]
  F (full) Mark [B]
  L (low) Mark [C]

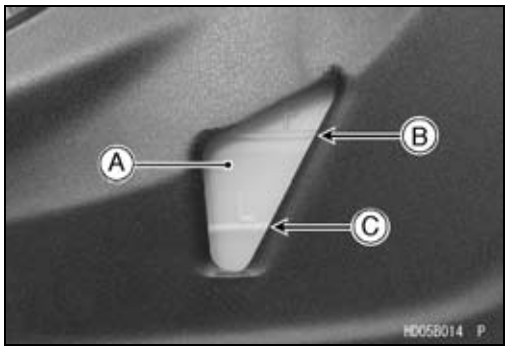

★If the coolant level is lower than the L mark, remove the reserve tank cap [A], then add coolant to the F mark [B].

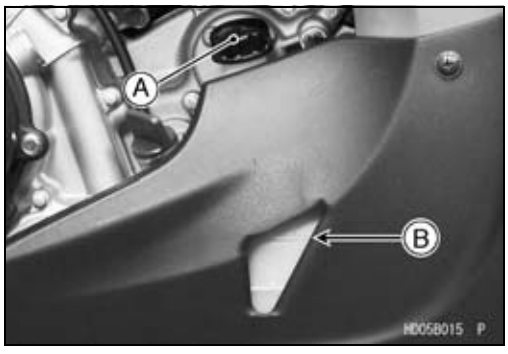

CAUTION

For refilling, add the specified mixture of coolant and soft water. Adding water alone dilutes the coolant and degrades its anticorrosion properties. The diluted coolant can attach the aluminum engine parts. In an emergency, soft water can be added. But the diluted coolant must be returned to the correct mixture ratio within a few days.
If coolant must be added often, or the reserve tank has run completely dry; there is probably leakage in the cooling system. Check the system for leaks.

Coolant Draining

- Refer to the Coolant Change in the Periodic Maintenance chapter.

Coolant Filling

- Refer to the Coolant Change in the Periodic Maintenance chapter.

Coolant

Pressure Testing

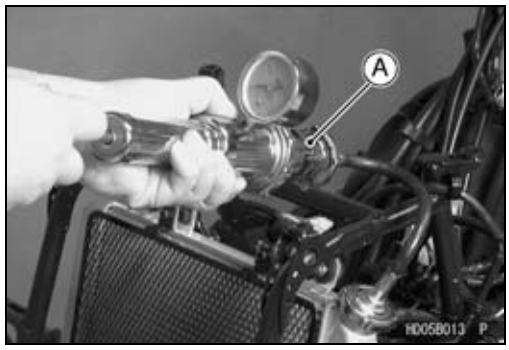

- Remove the radiator cap, and install a cooling system pressure tester [A] on the radiator filler neck.

NOTE

○*Wet the cap sealing surfaces with water or coolant to prevent pressure leakage.*

- Build up pressure in the system carefully until the pressure reaches 123 kPa (1.25 kgf/cm², 18 psi).

CAUTION
During pressure testing, do not exceed the pressure for which the system is designed. The maximum pressure is 123 kPa (1.25 kgf/cm², 18 psi).

- Watch the gauge for at least 6 seconds.

★If the pressure holds steady, the system is alright.

★If the pressure drops soon, check for leaks.

Water Pump

Water Pump Cover Removal

- Drain the coolant (see Coolant Change in the Periodic Maintenance chapter).
- Remove:
  Coolant Reserve Tank
  Water Hose [A]
  Water Pump Cover Bolts [B]
  Water Pump Cover [C]

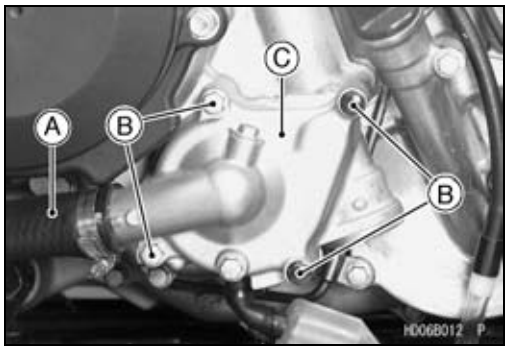

Water Pump Cover Installation

- Install:
  Knock Pins [A]
  New Gasket [B]
- Tighten:

Torque - Water Pump Cover Bolts: 8.8 N·m (0.90 kgf·m, 78 in·lb)

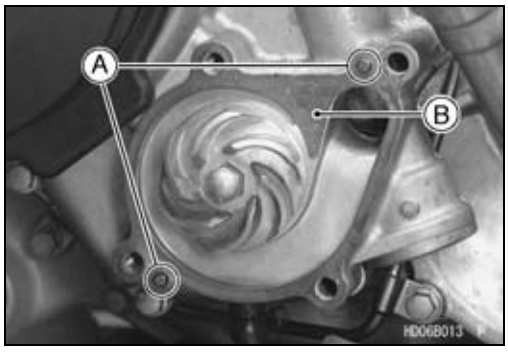

Water Pump Impeller Removal

- Drain the coolant (see Coolant Draining).
- Remove:
  Water Pump Cover (see Water Pump Cover Removal)
- Loosen the water pump impeller [A] counterclockwise.

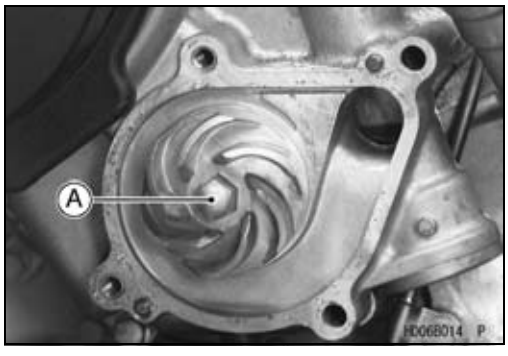

Water Pump Impeller Installation

- Apply a small amount of coolant on the sliding surface [A] of the mechanical seal and the sealing seat.
- Install the impeller on the water pump shaft and tighten the impeller.

Torque - Water Pump Impeller: 7.8 N·m (0.80 kgf·m, 69 in·lb)

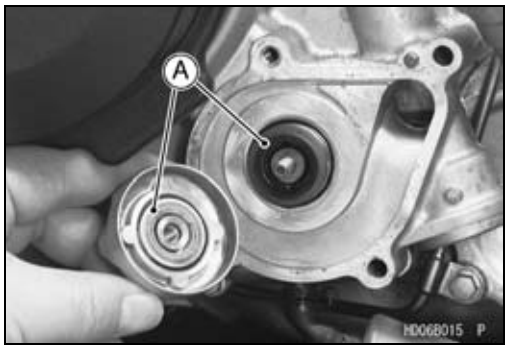

Water Pump

Water Pump Impeller Inspection

- Visually inspect the impeller [A].

★If the surface is corroded or the blades are damaged, replace the impeller.

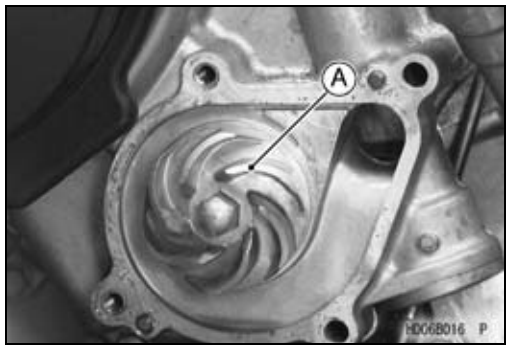

Water Pump Leakage Inspection

- Check the drainage catch tank [A] at the bottom of the water pump body for coolant leakage.

★If there is a coolant leak, the mechanical seal in the pump could be damaged. Replace the mechanical seal with a new one (see Mechanical Seal Replacement).

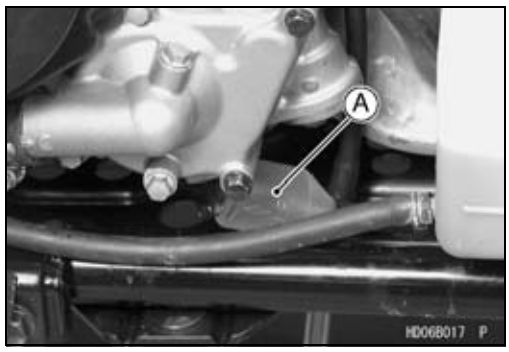

Mechanical Seal Replacement

- Remove:
  Water Pump Impeller (see Water Pump Impeller Removal)
  Alternator Cover (see Alternator Cover Removal in the Electrical System chapter)
- Take the bearing [A] out of the alternator cover, using the bearing remover.

Special Tools - Bearing Remover Shaft, ϕ9 [B]: 57001-1265
Bearing Remover Head, ϕ10 × ϕ12 [C]: 57001-1266

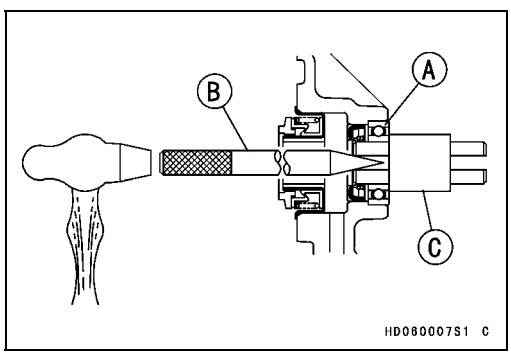

- Press out the mechanical seal [A] and oil seal [B] from the inside of the alternator cover with the bearing driver set [C].

Special Tool - Bearing Driver Set: 57001-1129

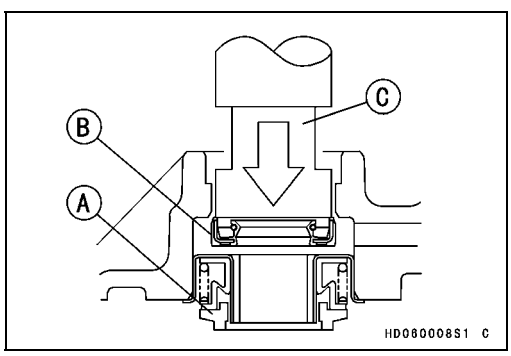

CAUTION

If either the mechanical seal, oil seal, or the ball bearing is removed, make sure to replace all of them simultaneously with a new one.
Be careful not to block the inspection hole with the oil seal. If the inspection hole is blocked, the coolant may pass through the oil seal and flow into the crankcase.

Water Pump

- Apply heat-resistance grease on the oil seal lip.
- From outside the alternator cover, press and insert the oil seal [A] so that its surface is flush with the step portion of the cover as shown [B].

  Special Tool - Bearing Driver Set: 57001-1129

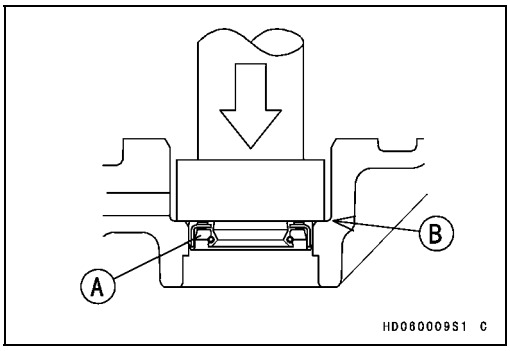

- From inside the alternator cover, press and insert the ball bearing [A] until it is bottomed.

  Special Tool - Bearing Driver Set: 57001-1129

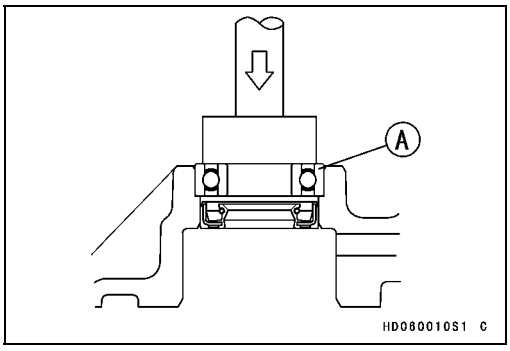

- Using a suitable socket [A] and the bearing driver [B], press and insert a new mechanical seal [C] until its flange stops at the step [D] of the hole.

  Special Tool - Bearing Driver Set: 57001-1129

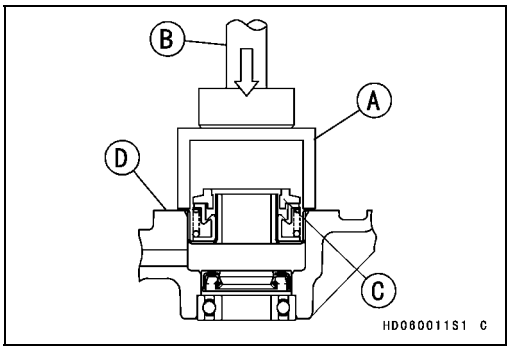

- Clean the sliding surface of a new mechanical seal with a high flash-point solvent, and apply a little coolant to the sliding surface to give the mechanical seal initial lubrication.
- Apply coolant to the surfaces of the rubber seal and sealing seat [A], and press the rubber seal [B] and sealing seat into the impeller by hand until the seat bottoms out.
- Tighten the water pump impeller by turning the bolt clockwise.

  Torque - Water Pump Impeller: 7.8 N·m (0.80 kgf·m, 69 in·lb)

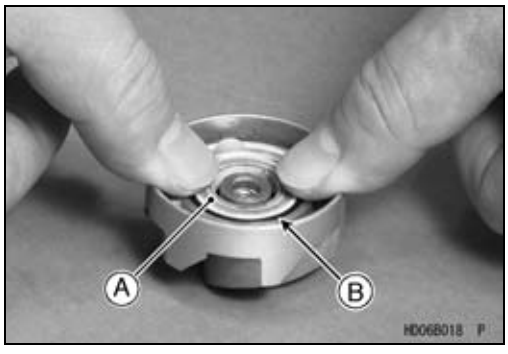

Radiator

Radiator Removal

⚠ WARNING

The radiator fan is connected directly to the battery. The radiator fan may start even if the ignition switch is off. NEVER TOUCH THE RADIATOR FAN UNTIL THE RADIATOR FAN CONNECTOR IS DISCONNECTED. TOUCHING THE FAN BEFORE THE CONNECTOR IS DISCONNECTED COULD CAUSE INJURY FROM THE FAN BLADES.

- Drain the coolant (see Coolant Change in the Periodic Maintenance chapter).

- Remove:
  Radiator Cover (see Radiator Cover Removal in the Frame chapter)
  Radiator Fan Motor Lead Connector [A]
  Reserve Tank Hose [B]
  Radiator Fan Switch Lead Connectors [C]
  Water Hose [D]

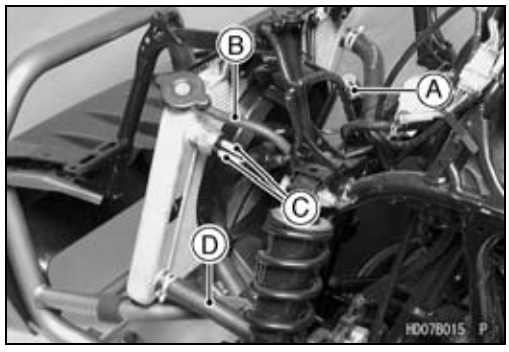

- Remove:
  Water Hose [A]
  Fan Motor Breather Hose [B]

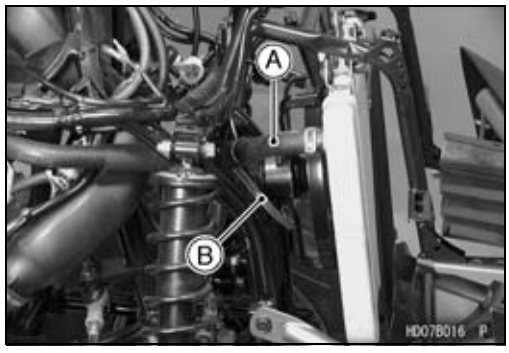

- Remove:
  Radiator Bolts [A]
  Radiator

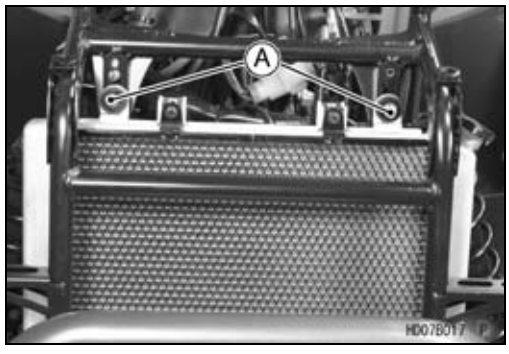

Radiator

- Pull the projections [A] out of from the dampers [B], and remove radiator [C].

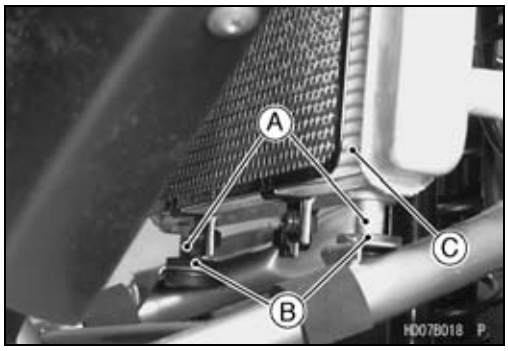

CAUTION

Do not touch the radiator core. This could damage the radiator fins, resulting in loss of cooling efficiency.

Radiator Installation

- Insert the projections of the radiator in the dampers.
- Install:
  Dampers [A]
  Collars [B]
- Tighten:

  Torque - Radiator Mounting Bolts [C]: 8.8 N·m (0.90 kgf·m, 78 in·lb)

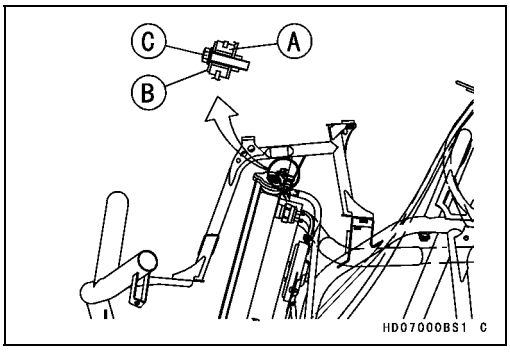

- Connect:
  Radiator Fan Motor Lead Connector [A]
- Install the fan motor breather hose [B].

NOTE

○*Do not apply lubricant at fitting hose region.*

- Install:
  Water Hoses [C]
  Reserve Tank Hose [D]
  Clamps [E]
- Run the hoses according to the Cable, Wire, and Hose Routing section in the Appendix chapter.

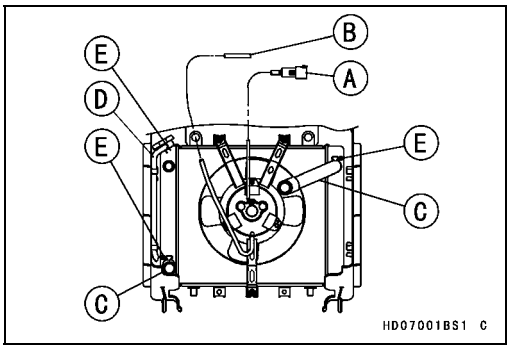

Radiator Fan Removal

- Remove:
  Radiator (see Radiator Removal)
  Radiator Fan Assembly Bolts [A]
  Fan Assembly [B]

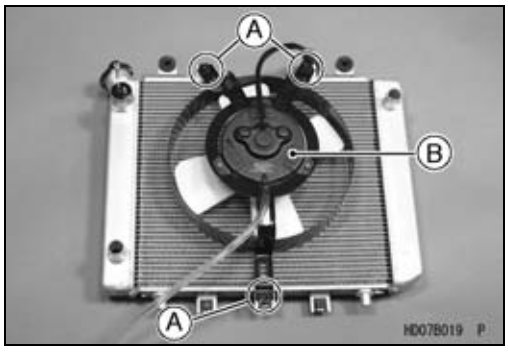

Radiator Fan Installation

- Install:
  Radiator Fan
  Radiator Fan Mounting Nut
- Install:
  Radiator Fan Assembly
- Tighten:

  Torque - Radiator Fan Assembly Bolts: 4.9 N·m (0.50 kgf·m, 43 in·lb)

Radiator

Radiator Inspection

- Check the radiator core.

★If there are obstructions to air flow, remove the radiator and remove obstructions.

★If the corrugated fins [A] are deformed, carefully straighten them.

★If the air passages of the radiator core are blocked more than 20% by unremovable obstructions or irreparably deformed fins, replace the radiator with a new one.

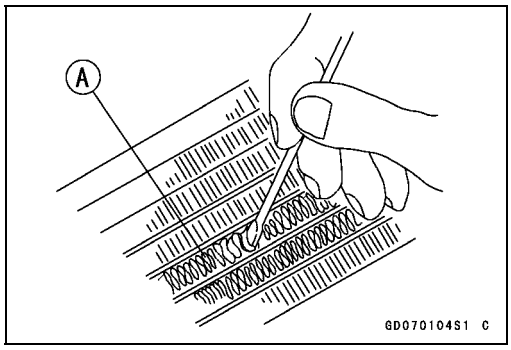

Radiator Cleaning

- Refer to the Radiator Cleaning in the Periodic Maintenance chapter.

Radiator Cap Inspection

- Check the condition of the top and bottom valve seals of the radiator cap.

★If any one of them shows visible damage, replace the cap.
Top and Bottom Valve Seals [A]
Valve Spring [B]

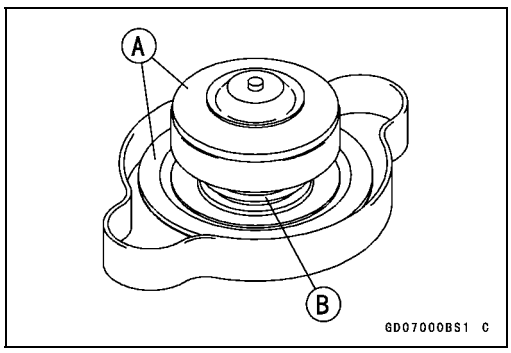

- Install the cap [A] on a cooling system pressure tester [B].

NOTE

○*Wet the cap sealing surfaces with water or coolant to prevent pressure leakage.*

- Watching the pressure gauge, slowly pump the pressure tester to build up the pressure. The relief valve opens, indicated by the gauge hand flicks downward.

○The relief valve must open within the relief pressure range in the table below and the gauge hand must remain within the specified range at least 6 second.

Radiator Cap Relief Pressure
Standard: 93 ~ 123 kPa (0.95 ~ 1.25 kgf/cm², 14 ~ 18 psi)

★If the cap cannot hold the specified pressure, or if it holds too much pressure, replace it with a new one.

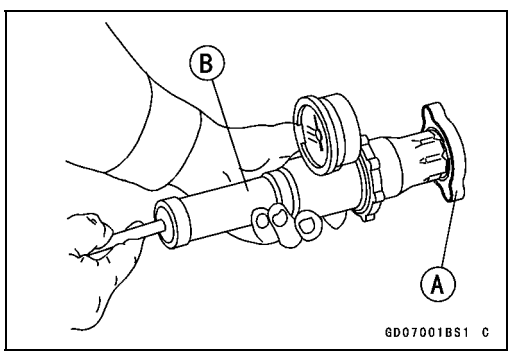

Thermostat

Thermostat Removal

- Drain the coolant (see Coolant Change in the Periodic Maintenance chapter).
- Remove:
  Right Side Cover (see Right Side Cover Removal in the Frame chapter)
  Water Temperature Switch Lead Connector [A]
  Water Pipe Bolt [B]

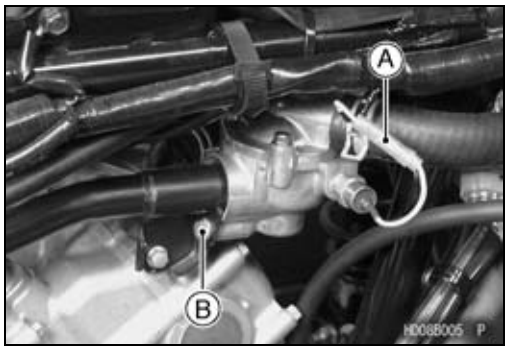

- Remove:
  Thermostat Housing Cover Bolts [A]
  Thermostat Housing Cover [B]
  Thermostat

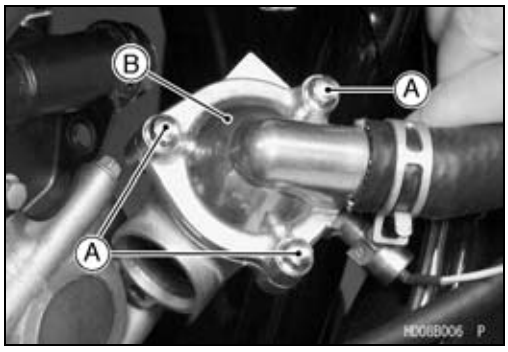

Thermostat Installation

- Install:
  Thermostat [A]
- Be sure to install the O-ring [B] on the housing cover.
- Tighten:

  Torque - Thermostat Housing Cover Bolts: 8.8 N·m (0.90 kgf·m, 78 in·lb)
  Water Pipe Mounting Bolt: 8.8 N·m (0.90 kgf·m, 78 in·lb)

- Add coolant (see Coolant Change in the Periodic Maintenance chapter).

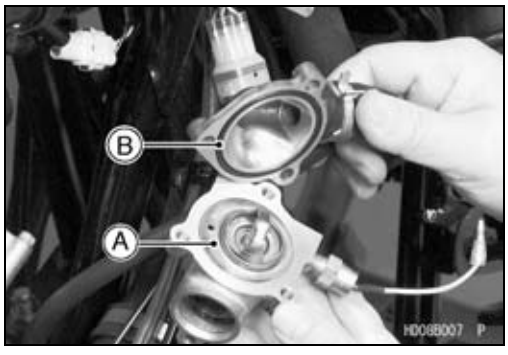

Thermostat Inspection

- Remove the thermostat, and inspect the thermostat valve [A] at room temperature.

★If the valve is open, replace the valve with a new one.

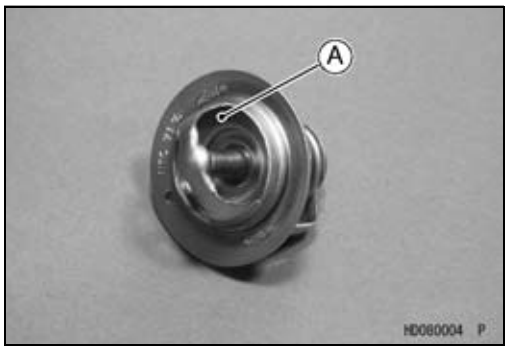

Thermostat

- To check valve opening temperature, suspend the thermostat [A] and an accurate thermometer [B] in a container of water with the heat-sensitive portions [C] in almost the same depth.

NOTE

○ *The thermostat must be completely submerged and the thermostat and thermometer must not touch the container sides or bottom.*

- Gradually raise the temperature of the water while stirring the water gently for even temperature.

★ If the measurement is out of the specified range, replace the thermostat.

Thermostat Valve Opening Temperature
69.5 ~ 72.5°C (157 ~ 162°F)

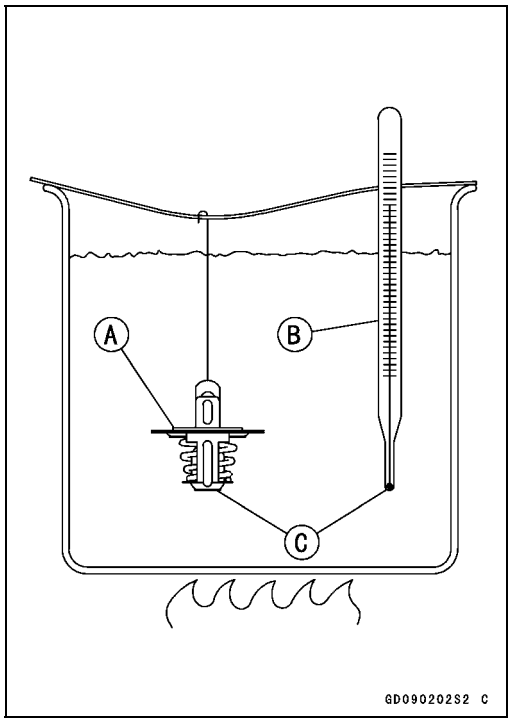

Radiator Fan Switch

Radiator Fan Switch Removal

CAUTION

The fan switch should never be allowed to fall on a hard surface. Such a shock to the part can damage it.

- Drain the coolant (see Coolant Change in the Periodic Maintenance chapter).
- Remove:
  Radiator Cover (see Radiator Cover Removal in the Frame chapter)
- Disconnect the fan switch leads.
- Remove the radiator fan switch [A].

Radiator Fan Switch Installation

- Tighten:

  Torque - Radiator Fan Switch: 18 N·m (1.8 kgf·m, 13 ft·lb)
- Fill the coolant (see Coolant Change in the Periodic Maintenance chapter).

Radiator Fan Switch Inspection

- Refer to the Radiator Fan Switch Inspection in the Electrical System chapter.

Water Temperature Switch

Water Temperature Switch Removal

CAUTION
The water temperature switch should never be allowed to fall on a hard surface. Such a shock to the part can damage it.

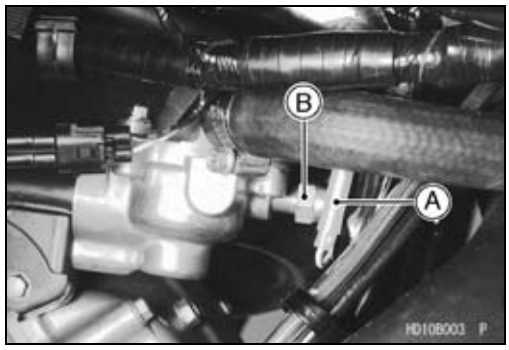

- Drain the coolant (see Coolant Change in the Periodic Maintenance chapter).
- Disconnect the switch lead connector [A].
- Remove the switch [B].

Water Temperature Switch Installation

- Apply silicone sealant to the threads of the switch and tighten it.

  Sealant - Kawasaki Bond (Silicone Sealant): 56019-120

  Torque - Water Temperature Switch: 7.8 N·m (0.80 kgf·m, 69 in·lb)

- Fill the coolant (see Coolant Change in the Periodic Maintenance chapter).

Water Temperature Switch Inspection

- Refer to the Water Temperature Switch Inspection in the Electrical System chapter.

Engine Top End

Table of Contents

Exploded View

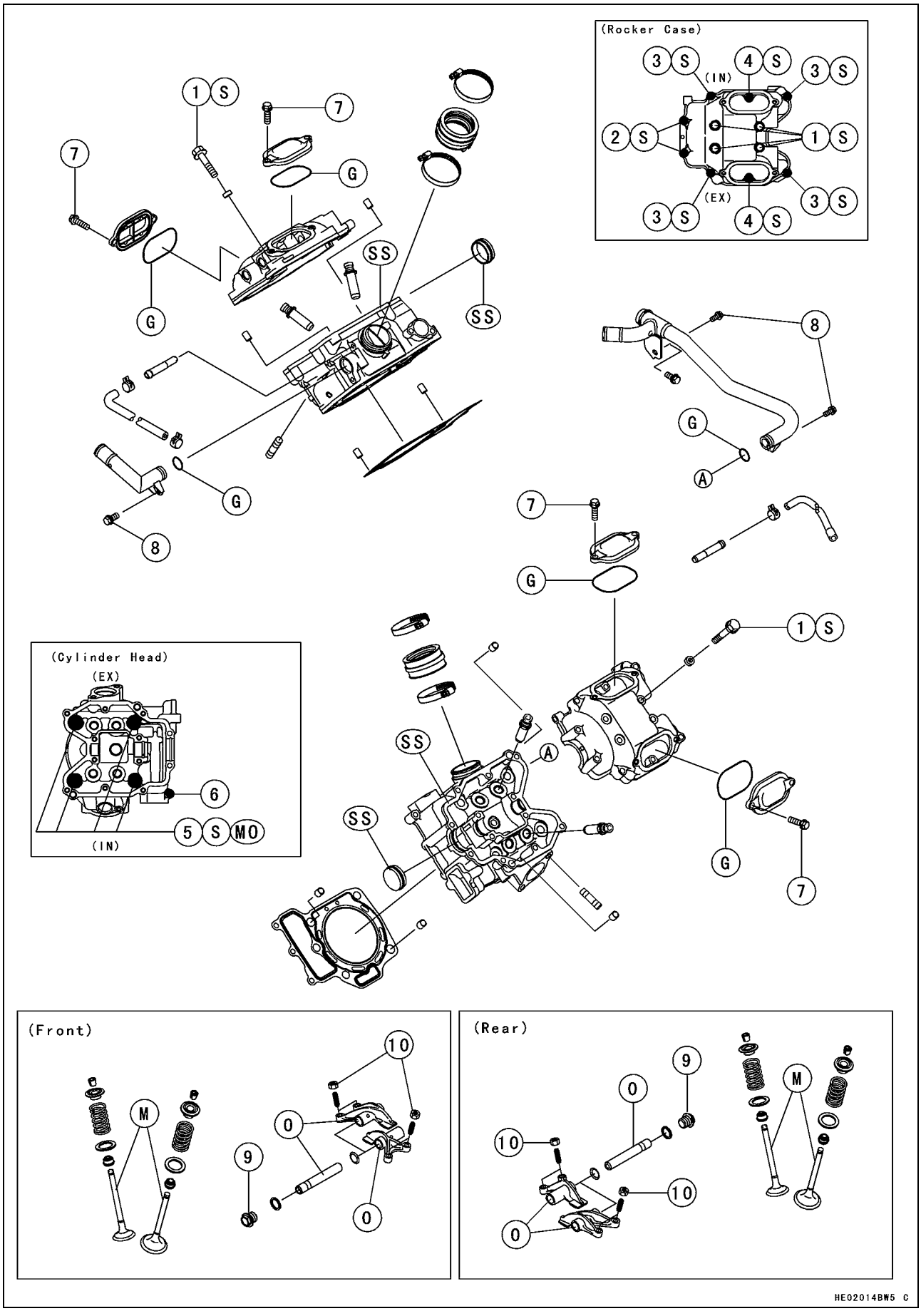

Exploded View

No.	Fastener	Torque			Remarks
		N·m	kgf·m	ft·lb	
1	Rocker Case Bolts 55 mm (2.2 in.)	8.8	0.90	78 in·lb	S
2	Rocker Case Bolts 130 mm (5.1 in.)	9.8	1.0	87 in·lb	S
3	Rocker Case Bolts 30 mm (1.2 in.)	9.8	1.0	87 in·lb	S
4	Rocker Case Bolts 25 mm (1.0 in.)	9.8	1.0	87 in·lb	S
5	Cylinder Head Bolts (M10), First Torque	25	2.5	18	S, MO
5	Cylinder Head Bolts (M10), Final Torque	49	5.0	36	S
6	Cylinder Head Bolts (M6)	9.8	1.0	87 in·lb	
7	Valve Adjusting Cap Bolts	8.8	0.90	78 in·lb	
8	Water Pipe Mounting Bolts	8.8	0.90	78 in·lb	
9	Rocker Shaft Bolts	22	2.2	16	
10	Valve Adjusting Screw Locknuts	12	1.2	104 in·lb	

G: Apply grease.
M: Apply molybdenum disulfide grease.
MO: Apply molybdenum disulfide oil (mixture of the engine oil and molybdenum disulfide grease in a weight ratio: 10 : 1).
S: Follow the specific tightening sequence.
SS: Apply silicone sealant (Kawasaki Bond: 92104-0004 or GE SILICONES TRANSLUCENT RTV128).

Exploded View

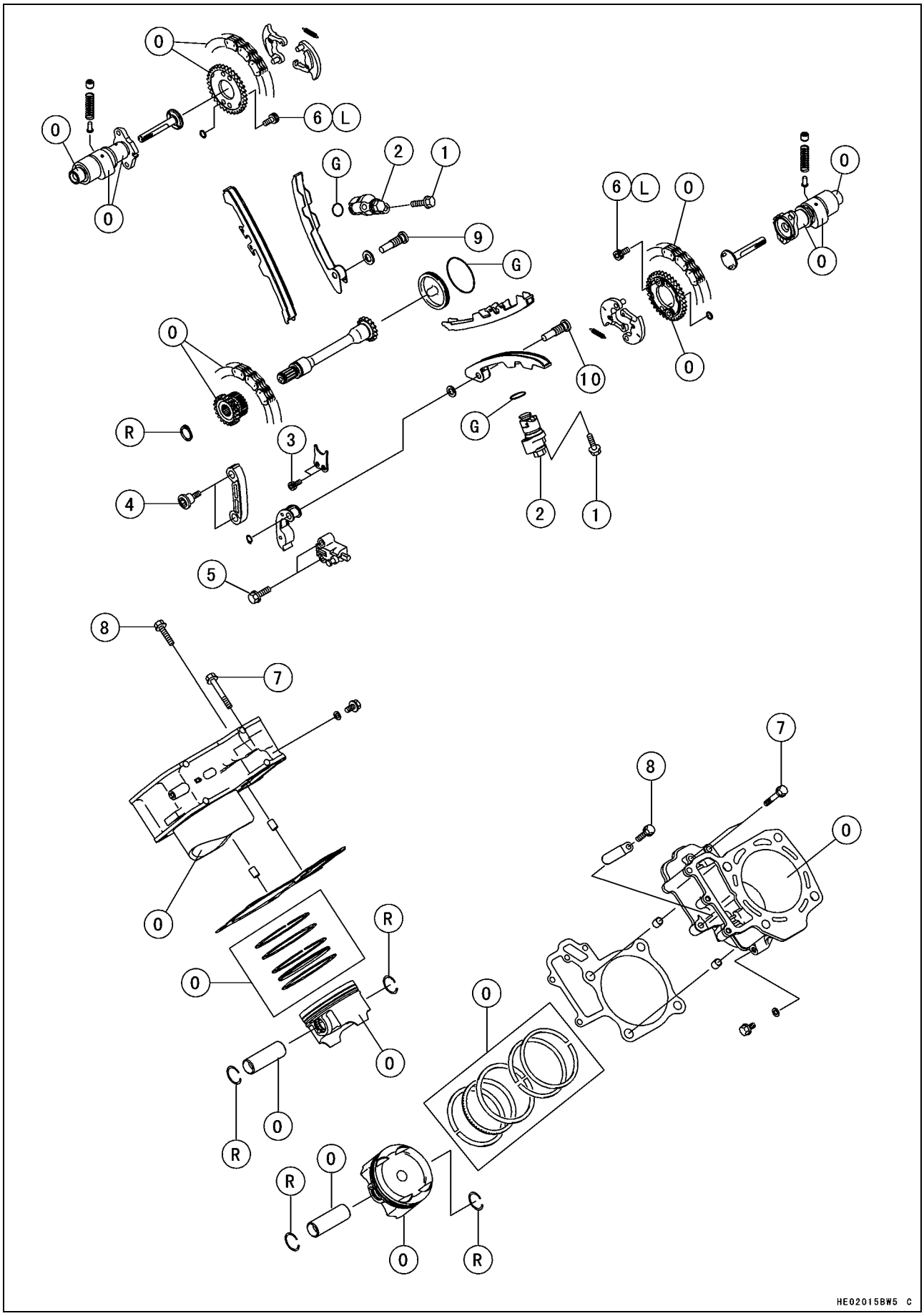

Exploded View

No.	Fastener	Torque			Remarks
		N·m	kgf·m	ft·lb	
1	Chain Tensioner Mounting Bolts	8.8	0.90	78 in·lb	
2	Chain Tensioner Cap Bolt	22	2.2	16	
3	Position Plate Bolts	8.8	0.90	78 in·lb	
4	Intermediate Shaft Chain Guide Bolts	8.8	0.90	78 in·lb	
5	Intermediate Shaft Chain Tensioner Bolts	8.8	0.90	78 in·lb	
6	Camshaft Sprocket Bolts	12	1.2	104 in·lb	L
7	Cylinder Bolts 40 mm (1.6 in.)	9.8	1.0	87 in·lb	
8	Cylinder Bolts 30 mm (1.2 in.)	9.8	1.0	87 in·lb	
9	Front Cylinder Camshaft Chain Guide Bolt	20	2.0	14	
10	Rear Cylinder Camshaft Chain Guide Bolt	20	2.0	14	

G: Apply grease.
L: Apply a non-permanent locking agent.
O: Apply engine oil.
R: Replacement Parts

Exploded View

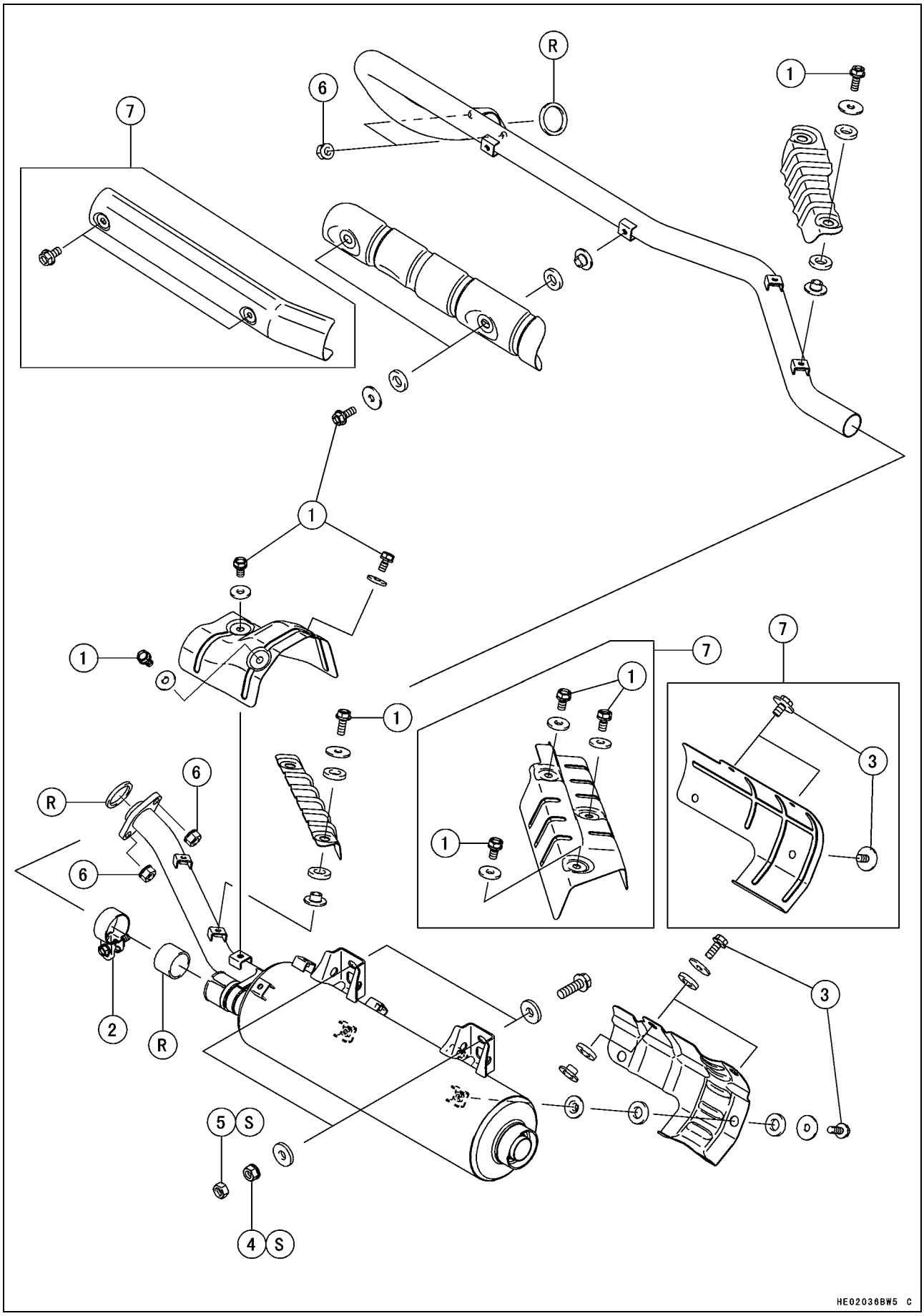

Exploded View

No.	Fastener	Torque			Remarks
		N·m	kgf·m	ft·lb	
1	Exhaust Pipe Cover Bolts	8.8	0.90	78 in·lb	
2	Muffler Clamp Bolt	8.8	0.90	78 in·lb	
3	Muffler Cover Bolts	8.8	0.90	78 in·lb	
4	Muffler Mounting Nuts	20	2.0	14	S
5	Muffler Mounting Locknuts	31	3.2	23	S
6	Exhaust Pipe Holder Nuts	17	1.7	13	

7. KVF750-A1, B1 Models
L: Apply a non-permanent locking agent.
R: Replacement Parts
S: Follow the specific tightening sequence.

Specifications

Item	Standard	Service Limit
Rocker Case		
Rocker Arm Inside Diameter	12.000 ~ 12.018 mm (0.4724 ~ 0.4731 in.)	12.05 mm (0.474 in.)
Rocker Shaft Diameter	11.983 ~ 11.994 mm (0.4718 ~ 0.4722 in.)	11.96 mm (0.471 in.)
Camshafts		
Cam Height:		
Exhaust	35.363 ~ 35.477 mm (1.3922 ~ 1.3967 in.)	35.26 mm (1.388 in.)
Inlet	35.622 ~ 35.736 mm (1.4024 ~ 1.4069 in.)	35.52 mm (1.398 in.)
Camshaft Bearing Clearance:		
ϕ18	0.016 ~ 0.052 mm (0.0006 ~ 0.0020 in.)	0.14 mm (0.0055 in.)
ϕ22	0.020 ~ 0.062 mm (0.0008 ~ 0.0024 in.)	0.15 mm (0.0059 in.)
Camshaft Journal Diameter:		
ϕ18	17.966 ~ 17.984 mm (0.7073 ~ 0.7080 in.)	17.94 mm (0.706 in.)
ϕ22	21.959 ~ 21.980 mm (0.8645 ~ 0.8653 in.)	21.93 mm (0.863 in.)
Camshaft Bearing Inside Diameter:		
ϕ18	18.000 ~ 18.018 mm (0.7087 ~ 0.7094 in.)	18.08 mm (0.712 in.)
ϕ22	22.000 ~ 22.021 mm (0.8661 ~ 0.8670 in.)	22.08 mm (0.870 in.)
Camshaft runout	TIR 0.02 mm (0.0008 in.) or less	TIR 0.1 mm (0.0039 in.)
KACR (Kawasaki Automatic Compression Release):		
KACR Operating Engine Speed	760 ±30 r/min (rpm)	– – –
Cylinder Head		
Cylinder Compression (Usable Range)		
Electric Starter	251 ~ 456 kPa (2.56 ~ 4.65 kgf/cm², 36 ~ 66 psi) @380 r/min (rpm)	– – –
Cylinder head warp	– – –	0.05 mm (0.002 in.)
Valve		
Valve Clearance:		
Exhaust	0.20 ~ 0.25 mm (0.0079 ~ 0.0098 in.)	– – –
Inlet	0.10 ~ 0.15 mm (0.0039 ~ 0.0059 in.)	– – –
Valve Head Thickness:		
Exhaust	0.8 mm (0.031 in.)	0.5 mm (0.020 in.)
Inlet	0.5 mm (0.020 in.)	0.3 mm (0.012 in.)
Valve Stem Bend	– – –	TIR 0.05 mm (0.002 in.)

Specifications

Item	Standard	Service Limit
Valve Stem Diameter:		
Exhaust	4.955 ~ 4.970 mm (0.1951 ~ 0.1957 in.)	4.94 mm (0.1945 in.)
Inlet	4.975 ~ 4.990 mm (0.1959 ~ 0.1965 in.)	4.96 mm (0.1953 in.)
Valve Guide Inside Diameter:		
Exhaust	5.000 ~ 5.012 mm (0.1969 ~ 0.1973 in.)	5.08 mm (0.20 in.)
Inlet	5.000 ~ 5.012 mm (0.1969 ~ 0.1973 in.)	5.08 mm (0.20 in.)
Valve/Valve Guide Clearance (Wobble Method):		
Exhaust	0.09 ~ 0.17 mm (0.0035 ~ 0.0067 in.)	0.37 mm (0.0146 in.)
Inlet	0.03 ~ 0.11 mm (0.0012 ~ 0.0043 in.)	0.31 mm (0.0122 in.)
Valve Seat Cutting Angle	45°, 32°, 60°	– – –
Valve Seating Surface:		
Outside Diameter:		
Exhaust	25.2 ~ 25.4 mm (0.992 ~ 1.000 in.)	– – –
Inlet	29.4 ~ 29.6 mm (1.157 ~ 1.165 in.)	– – –
Width:		
Exhaust	0.5 ~ 1.0 mm (0.02 ~ 0.04 in.)	– – –
Inlet	0.5 ~ 1.0 mm (0.02 ~ 0.04 in.)	– – –
Valve Spring Free Length:		
Exhaust	41.3 mm (1.626 in.)	39.5 mm (1.555 in.)
Inlet	41.3 mm (1.626 in.)	39.5 mm (1.555 in.)
Cylinder, Piston		
Cylinder Inside Diameter	84.994 ~ 85.006 mm (3.3462 ~ 3.3467 in.)	85.10 mm (3.350 in.)
Piston Diameter	84.964 ~ 84.979 mm (3.3450 ~ 3.3456 in.)	84.81 mm (3.3390 in.)
Piston/Cylinder Clearance	0.015 ~ 0.042 mm (0.0006 ~ 0.0017 in.)	– – –
Piston Ring/Groove Clearance:		
Top	0.04 ~ 0.08 mm (0.0016 ~ 0.0032 in.)	0.18 mm (0.0071 in.)
Second	0.03 ~ 0.07 mm (0.0012 ~ 0.0028 in.)	0.17 mm (0.0067 in.)

Specifications

Item	Standard	Service Limit
Piston Ring Groove Width:		
Top	1.03 ~ 1.05 mm (0.0405 ~ 0.0413 in.)	1.13 mm (0.0445 in.)
Second	1.02 ~ 1.04 mm (0.0402 ~ 0.0409 in.)	1.12 mm (0.0441 in.)
Piston Ring Thickness:		
Top	0.97 ~ 0.99 mm (0.0382 ~ 0.0390 in.)	0.90 mm (0.035 in.)
Second	0.97 ~ 0.99 mm (0.0382 ~ 0.0390 in.)	0.90 mm (0.035 in.)
Piston Ring End Gap:		
Top	0.20 ~ 0.30 mm (0.0079 ~ 0.0118 in.)	0.60 mm (0.0236 in.)
Second	0.30 ~ 0.45 mm (0.0118 ~ 0.0177 in.)	0.75 mm (0.0295 in.)
Oil	0.20 ~ 0.70 mm (0.0079 ~ 0.0276 in.)	1.00 mm (0.0394 in.)

Special Tools and Sealant

Outside Circlip Pliers:
57001-144

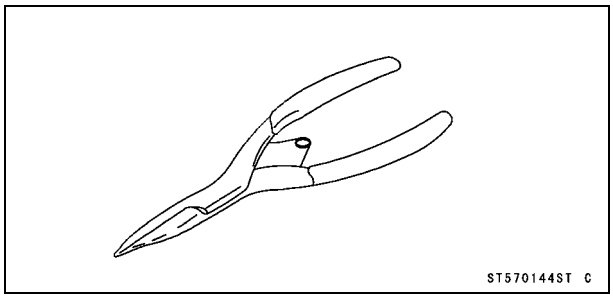

Compression Gauge, 20 kgf/cm²:
57001-221

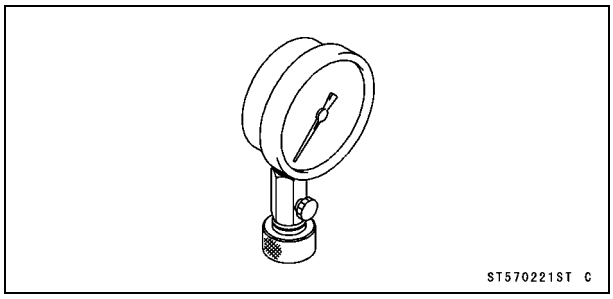

Valve Spring Compressor Assembly:
57001-241

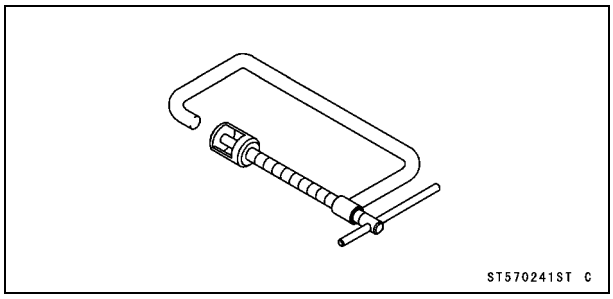

Piston Pin Puller Assembly:
57001-910

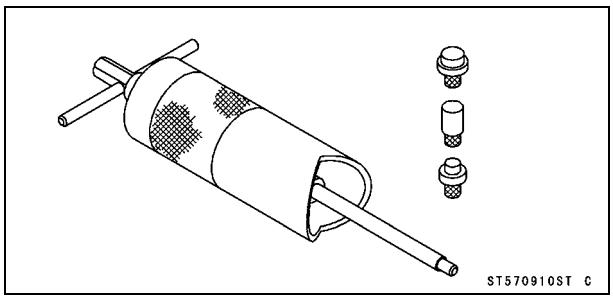

Valve Seat Cutter, 45° - ϕ27.5:
57001-1114

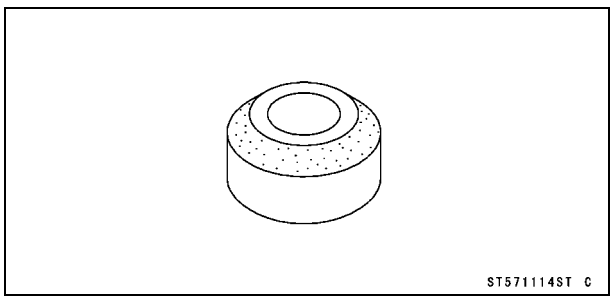

Valve Seat Cutter, 32° - ϕ28:
57001-1119

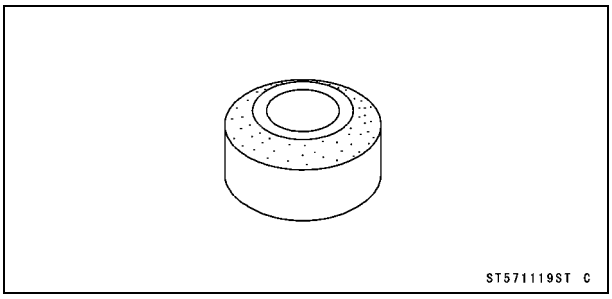

Valve Seat Cutter, 60° - ϕ30:
57001-1123

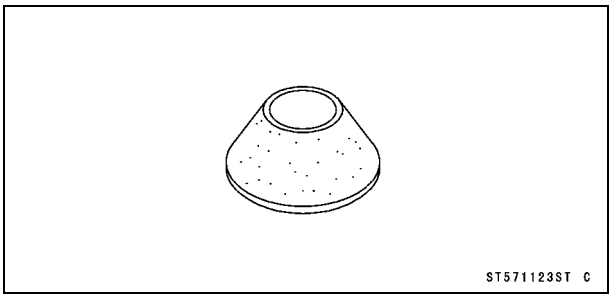

Valve Seat Cutter Holder Bar:
57001-1128

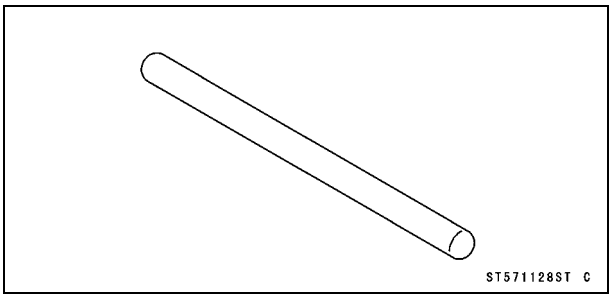

Valve Seat Cutter, 45° - ϕ30:
57001-1187

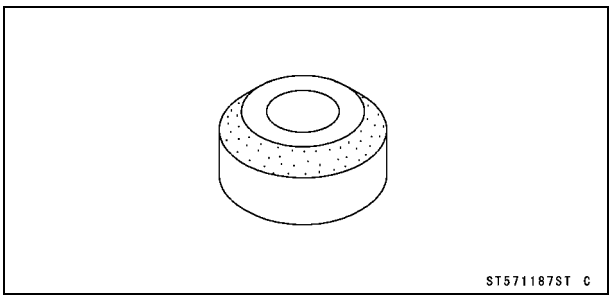

Valve Seat Cutter, 32° - ϕ33:
57001-1199

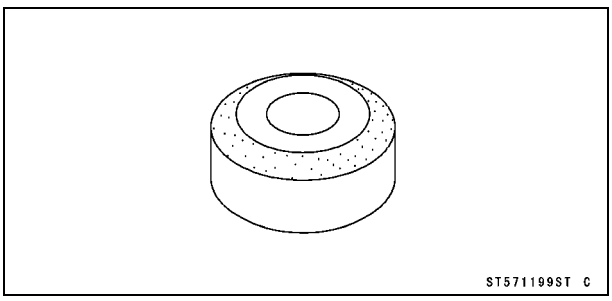

Special Tools and Sealant

Valve Spring Compressor Adapter, ϕ22:
57001-1202

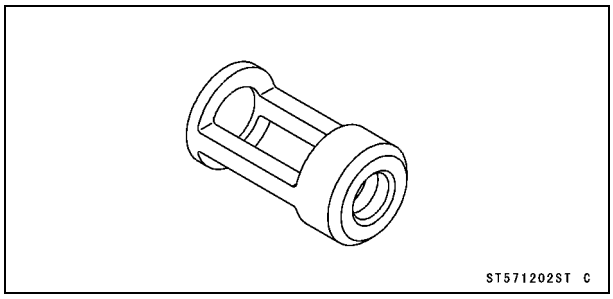

Valve Guide Arbor, ϕ5:
57001-1203

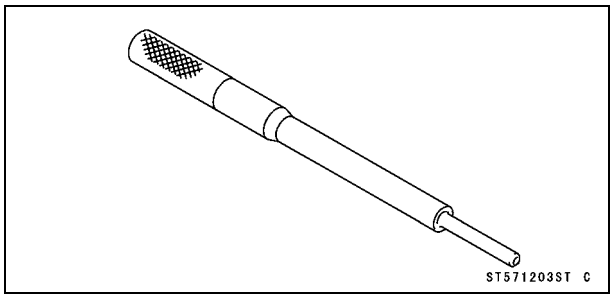

Valve Guide Reamer, ϕ5:
57001-1204

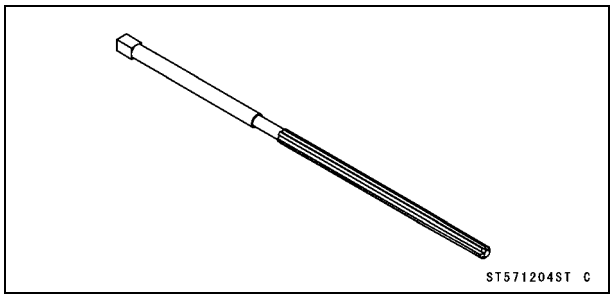

Valve Seat Cutter Holder, ϕ5:
57001-1208

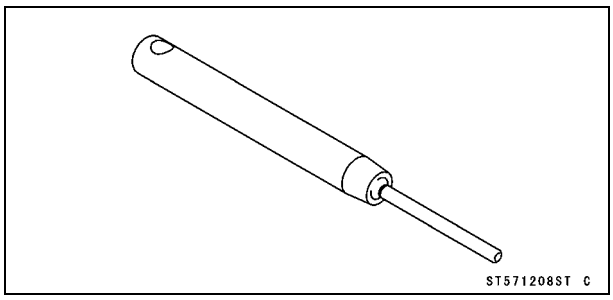

Piston Pin Puller Adapter, ϕ14:
57001-1211

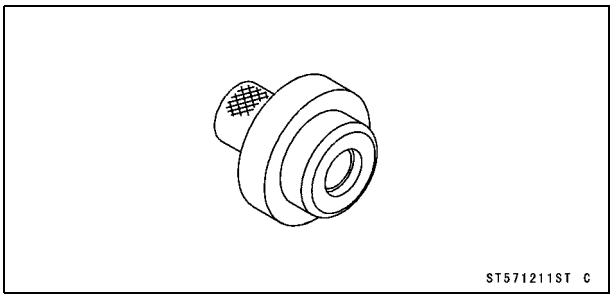

Filler Cap Driver:
57001-1454

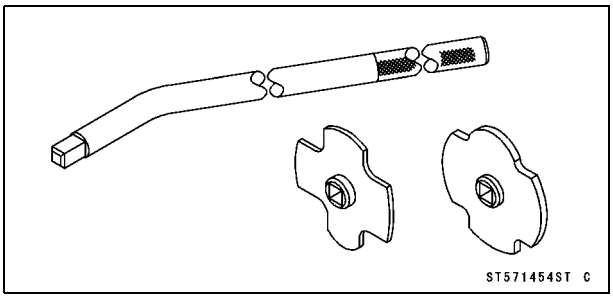

Compression Gauge Adapter, M10 × 1.0:
57001-1458

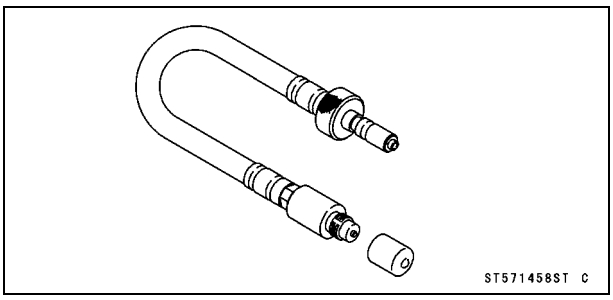

Kawasaki Bond (Silicone Sealant):
92104-0004

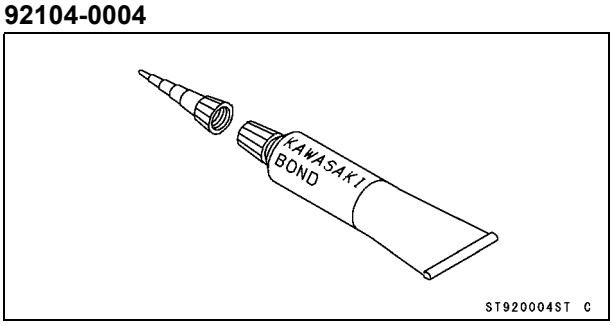

Camshaft Chain Tensioner

Camshaft Chain Tensioner Removal

CAUTION

This is a non-return type cam chain tensioner. The push rod does not return to its original position once it moves out to take up cam chain slack. Observe all the rules listed below:
When removing the tensioner, do not take out the mounting bolts only partway. Retightening the mounting bolts from this position could damage the tensioner and the camshaft chain. Once the bolts are loosened, the tensioner must be removed and reset as described in "Camshaft Chain Tensioner Installation".
Do not turn over the crankshaft while the tensioner is removed. This could upset the cam chain timing, and damage the valves.

- Remove:
  Cap Bolt [A] and Washer
  Pin and Spring

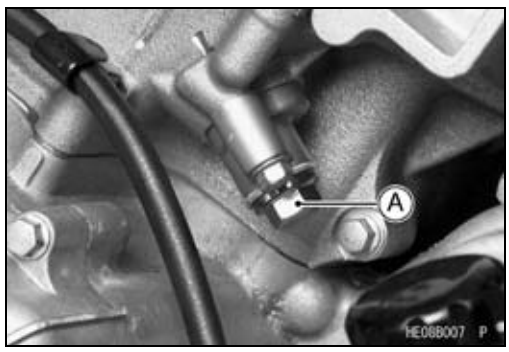

- Remove:
  Tensioner Mounting Bolts [A]
  Camshaft Chain Tensioner [B]

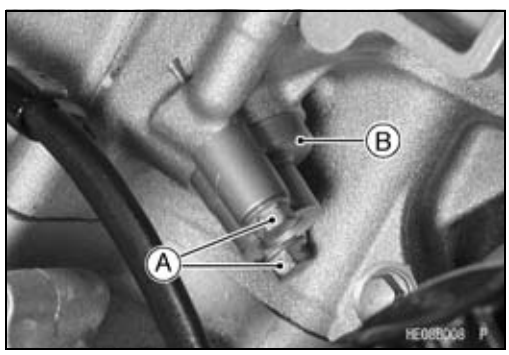

Camshaft Chain Tensioner Installation

- Push the stopper [A] to release the ratchet and push the push rod [B] into the tensioner body.

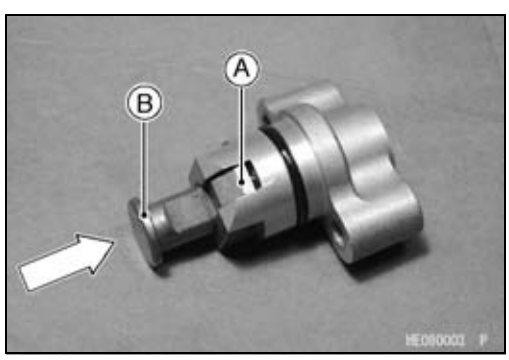

Camshaft Chain Tensioner

- Tighten:

  Torque - Chain Tensioner Mounting Bolts: 8.8 N·m (0.90 kgf·m, 78 in·lb)

- Install:
  Pin [A] and Spring [B]
  Washer [C] and Chain Tensioner Cap Bolt [D]
- Tighten:

  Torque - Chain Tensioner Cap Bolt: 22 N·m (2.2 kgf·m, 16 ft·lb)

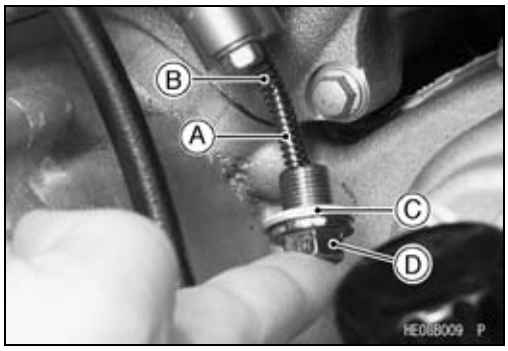

Rocker Case

Rocker Case Removal

Front Rocker Case

- Remove:
  Front Fender (see Front Fender Removal in the Frame chapter)
  Recoil Starter (see Recoil Starter Removal in the Recoil Starter chapter)
  Timing Inspection Plug [A]

Special Tool - Filler Cap Driver [B]: 57001-1454

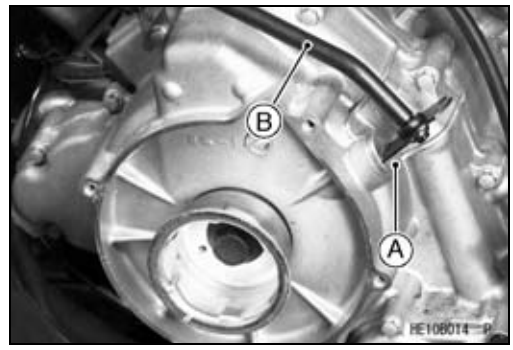

- Remove:
  Valve Adjusting Caps

- Using a wrench on the alternator bolt, turn the crankshaft counterclockwise until “T-F” mark [A] is aligned with the notch [B] in the inspection window, and the cam lobes are pointing away from the rocker arms: the end of the compression stroke.

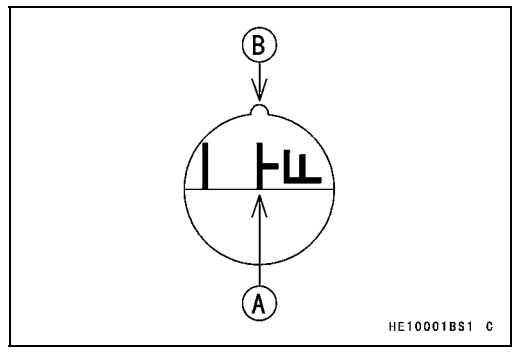

CAUTION

Be sure to position the crankshaft at TDC of the end of the compression stroke when removing or installing the rocker case. The rocker arms could bend the valves.

- Drain the coolant (see Coolant Change section in the Periodic maintenance chapter).

- Remove:
  Thermostat and Water Pipes (see Thermostat Removal in the Cooling System chapter)
  Front and Rear Propeller Shafts (see Front and Rear Propeller Shaft Removal in the Final Drive chapter)
  Air Cleaner Housing Mounting Bolts
  Front Camshaft Chain Tensioner (see Camshaft Chain Tensioner Removal)
  Front Engine Mounting Bolt [A]
- Loosen:
  Rear Engine Mounting Bolt [B]

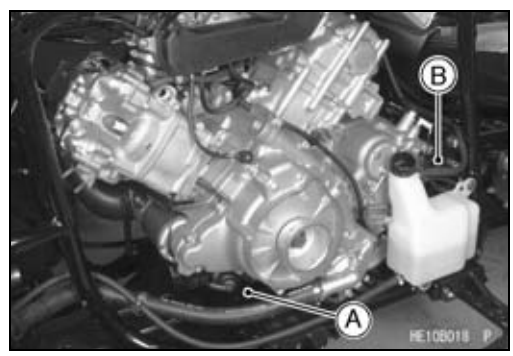

- Remove:
  Rocker Case Bolts [A]
- Loosen:
  Rocker Case Bolt [B]

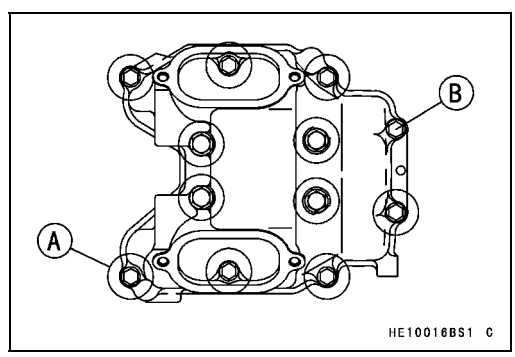

- Insert a suitable bar [A] under the front of the engine.

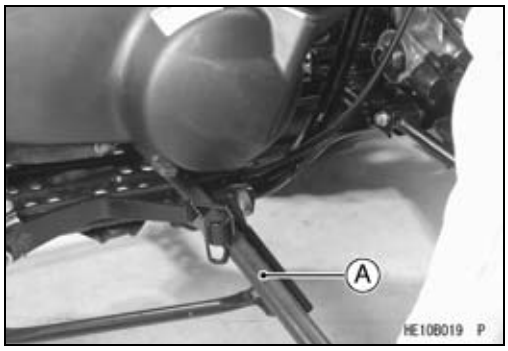

- Lift [A] the front of the engine to remove the bolt [B] of the front right side on the rocker case.
- Lift the rocker case to clear of the dowel pins in the cylinder head and slide the rocker case out of the frame.

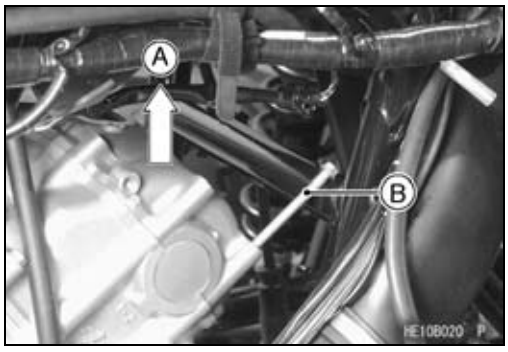

Rear Rocker Case

- Remove:
  Front Rocker Case
  Torque Converter Cover Upper Air Duct
- Using a wrench on the alternator bolt, turn the crankshaft **counterclockwise** (270°) until “T-R” mark [A] is aligned with the notch [B] in the inspection window, and the cam lobes are pointing away from the rocker arms: the end of the compression stroke.

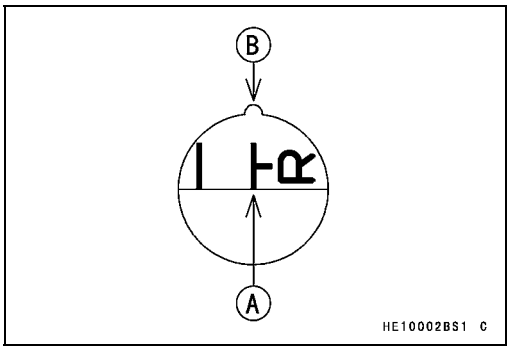

CAUTION
Be sure to position the crankshaft at TDC of the end of the compression stroke when removing or installing the rocker case. The rocker arms could bend the valves.

- Remove:
  Rear Camshaft Chain Tensioner (see Camshaft Chain Tensioner Removal)
  Rocker Case Bolts [A]
  Rear Rocker Case [B]
- Lift the rocker case to clear of the dowel pins in the cylinder head and slide the rocker case out of the frame.

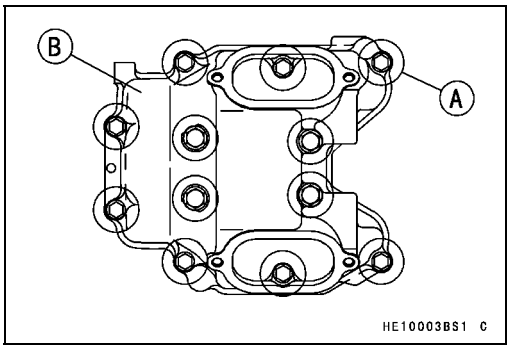

Rocker Case Installation

- Check that the crankshaft is positioned at TDC and at the end of the compression stroke.

CAUTION
Be sure to position the crankshaft is at TDC of the end of the compression stroke. The rocker arms could bend the valves.

Rocker Case

- Apply silicone sealant to the outer surface of the cap [A] and the cylinder head upper surface [B] as shown.

  Sealant - Kawasaki Bond (Silicone Sealant): 92104-0004 or GE SILICONES TRANSLUCENT RTV128

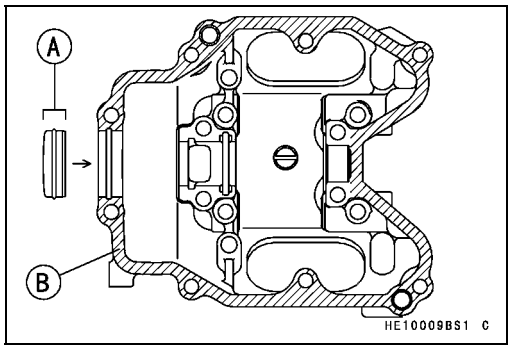

- Tighten the rocker case bolts following the tightening sequence shown.

  Torque - Rocker Case Bolts: 8.8 N·m (0.90 kgf·m, 78 in·lb)
  [1, 2, 3, 4] L = 55 mm (2.2 in.) with washers
  Rocker Case Bolts: 9.8 N·m (1.0 kgf·m, 87 in·lb)
  [5, 6] L = 130 mm (5.1 in.)
  [A] L = 30 mm (1.2 in.)
  [B] L = 25 mm (1.0 in.)

○Lift the front of the engine to install the bolt of the front right side on the front rocker case.

- Check the valve clearance and adjust it if necessary.

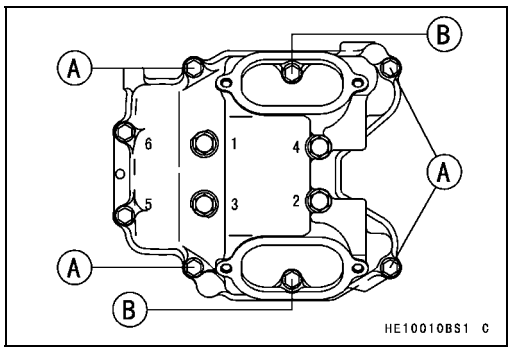

- Apply grease to the O-ring [A].
- Tighten:

  Torque - Valve Adjusting Cap Bolts [B]: 8.8 N·m (0.90 kgf·m, 78 in·lb)

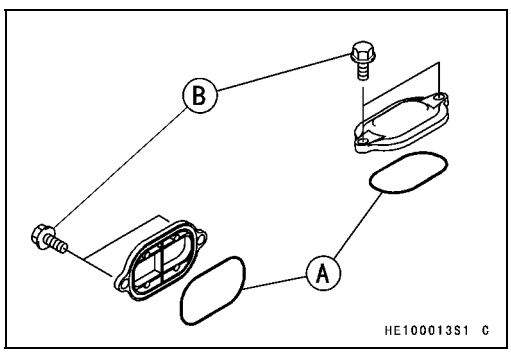

Rocker Arm Removal

- Remove:
  Rocker Case (see Rocker Case Removal)
  Rocker Shaft Bolts [A]

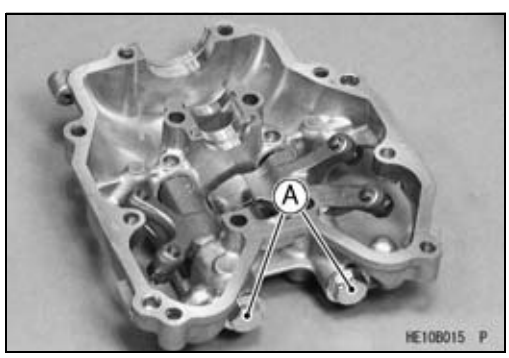

Rocker Case

- Using a M8 bolt [A], remove the rocker shaft [B].
- Remove:
  Rocker Arm [C]
  Washers [D]

○Mark and record the rocker arm location so it can be installed in the original position.
○The rocker arms come off with the rocker shafts.

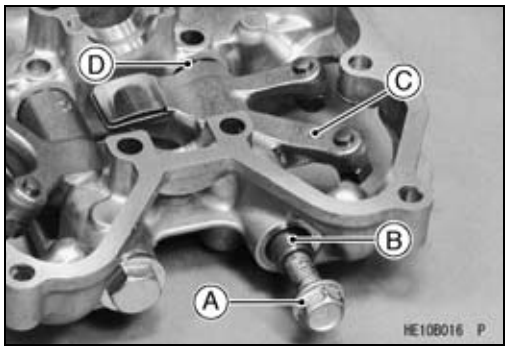

Rocker Arm Installation

- Apply engine oil:
  Rocker Shafts [A]
  Hole in Rocker Arms [B]
- Replace the copper washers [C] with new ones.
- Install:
  Wave Washers [D] (as shown)
  Rocker Arms (as shown)
  Rocker Shafts and Copper Washers
- Tighten:

Torque - Rocker Shaft Bolts [E]: 22 N·m (2.2 kgf·m, 16 ft·lb)

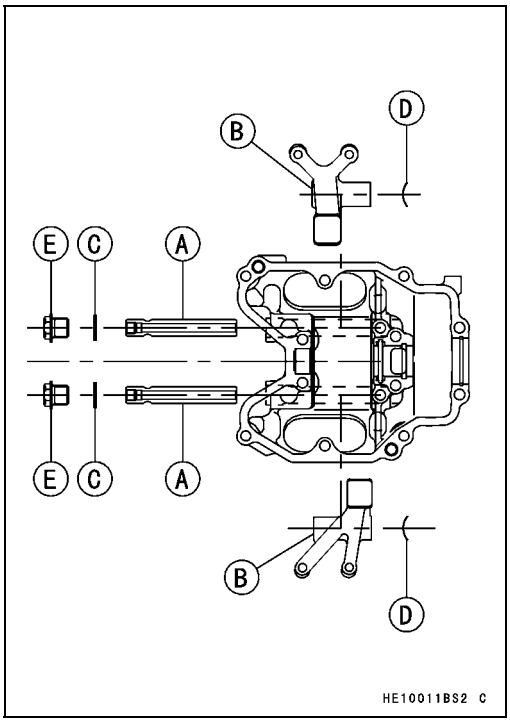

Rocker Arm Inspection

- Inspect the area [A] on the rocker arm where the cam rubs.

★If the rocker arm is scored, discolored or otherwise damaged, replace it. Also inspect the camshaft lobes.

- Inspect the end of the valve clearance adjusting screws [B] where it contacts the valve stem.

★If the end of the adjusting screw is mushroomed or damaged in any way, or if the screw will not turn smoothly, replace it. Also inspect the end of the valve stem.

- Measure the inside diameter [C] of the rocker arm with a dial bore gauge.

★If the rocker arm inside diameter is larger than the service limit, replace it. Also check the rocker shaft diameter (see Rocker Shaft Diameter Measurement).

Rocker Arm Inside Diameter
Standard: 12.000 ~ 12.018 mm (0.4724 ~ 0.4731 in.)
Service Limit: 12.05 mm (0.474 in.)

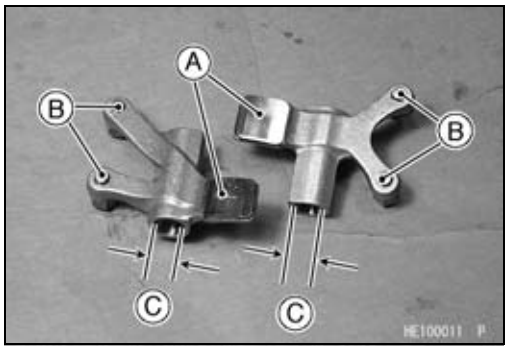

Rocker Case

Rocker Shaft Diameter Measurement

- Measure the diameter [A] of the rocker shaft where the rocker arm pivots on it with a micrometer.

★If the rocker shaft diameter is smaller than the service limit, replace it. Also check the rocker arm inside diameter (see Rocker Arm Inspection).

Rocker Shaft Diameter

Standard: 11.983 ~ 11.994 mm (0.4718 ~ 0.4722 in.)

Service Limit: 11.96 mm (0.471 in.)

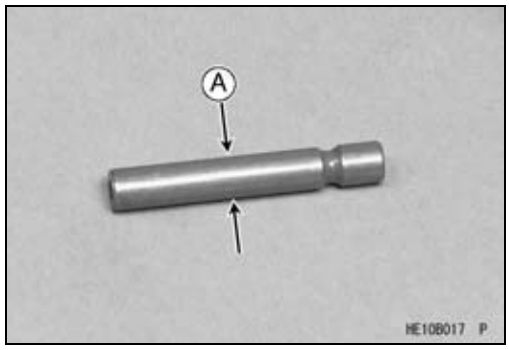

Camshaft

Camshaft Removal

- Remove:
  Camshaft Chain Tensioners (see Camshaft Chain Tensioner Removal)
  Rocker Cases (see Rocker Case Removal)
  Camshafts [A]
- Support the chain using a suitable tool.

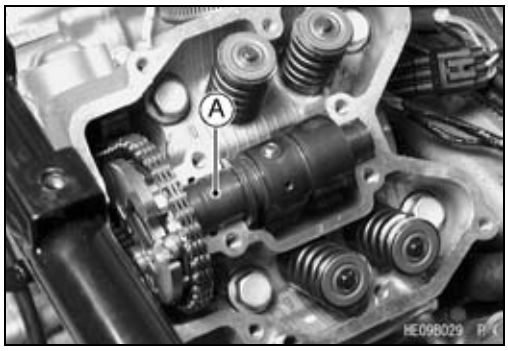

Camshaft Installation

- Using a wrench on the alternator bolt, turn the crankshaft **clockwise** until “T-R” mark [A] is aligned with the notch [B] in the inspection window.

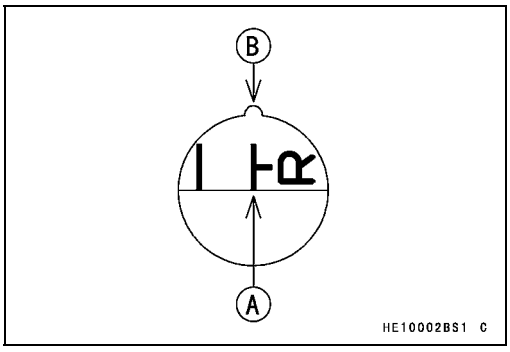

- The rear camshaft [A] has a groove [B].
- First, install the rear camshaft.

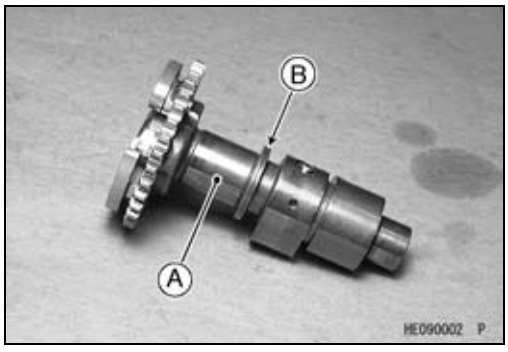

- Face the arrow [A] of the rear camshaft sprocket upward (left side view).
- Engage the rear camshaft chain with the rear camshaft sprocket.
- Align the marks [B] on the weights with the rear cylinder head upper surface.

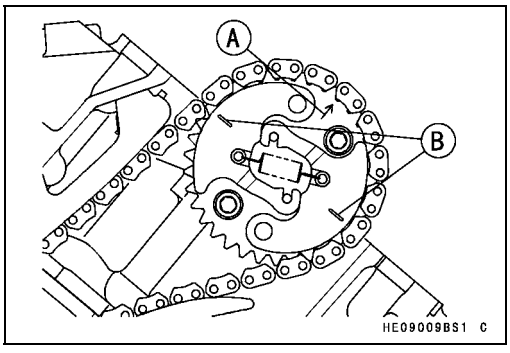

- Using a wrench on the alternator bolt, turn the crankshaft **clockwise** 270°.

○Align the “T-F” mark [A] with the notch [B] in the inspection window.

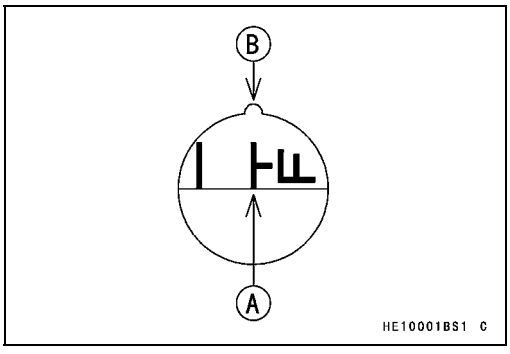

Camshaft

- Face the arrow [A] of the front camshaft sprocket upward (right side view).
- Engage the front camshaft chain with the front camshaft sprocket.
- Align the marks [B] on the weights with the front cylinder head upper surface.

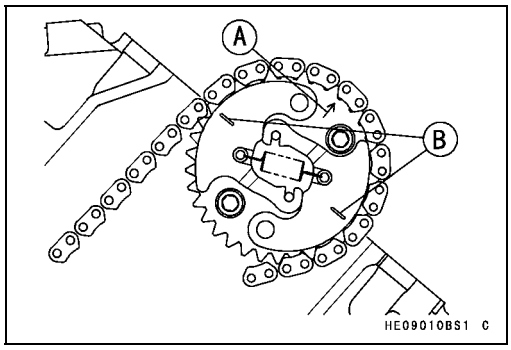

- Install:
  Rocker Cases (see Rocker Case Installation)
  Camshaft Chain Tensioners (see Camshaft Chain Tensioner Installation)
- Check the valve clearance (see Valve Clearance Inspection).

Camshaft Assembly

- Install the KACR unit [A] (sprocket) on the camshaft so that the unit fits onto the camshaft pins [B].
- Apply a non-permanent locking agent to the camshaft sprocket bolts [C].
- Tighten:

  Torque - Camshaft Sprocket Bolts: 12 N·m (1.2 kgf·m, 104 in·lb)

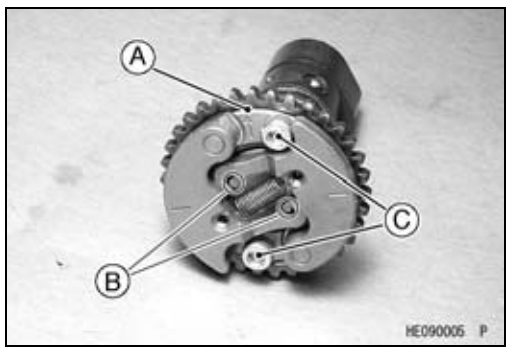

Cam Wear Inspection

- Remove the camshaft.
- Measure the height [A] of the cam with a micrometer.

★If the cams are worn past the service limit, replace the camshaft.

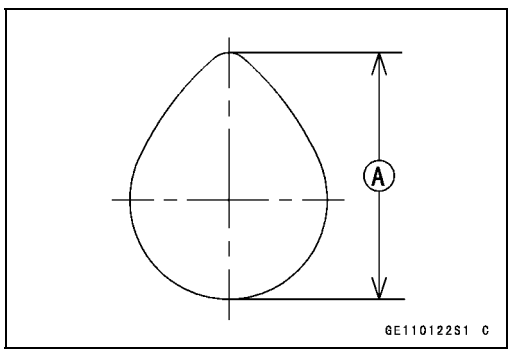

Cam Height

Standard:

Exhaust	**35.363 ~ 35.477 mm (1.3922 ~ 1.3967 in.)**
Inlet	**35.622 ~ 35.736 mm (1.4024 ~ 1.4069 in.)**

Service Limit:

Exhaust	**35.26 mm (1.388 in.)**
Inlet	**35.52 mm (1.398 in.)**

Camshaft

Camshaft Bearing Wear Inspection

○The journal wear is measured using plastigage (press gauge), which is inserted into the clearance to be measured. The plastigage indicates the clearance by the amount it is compressed and widened when the parts are assembled.

- Cut strips of plastigage to journal width. Place a strip on each journal parallel to the camshaft with the camshaft installed in the correct position so that the plastigage will be compressed between the journal and rocker case.
- Install the rocker case, tightening the bolts in the correct sequence to the specified torque (see Rocker Case Installation).

NOTE

○*Do not turn the camshaft when the plastigage is between the journal and rocker case.*

- Remove the rocker case and measure the plastigage width [A] to determine the clearance between the journal and the rocker case. Measure the widest portion of the plastigage.

Camshaft Bearing Clearance (ϕ18)
Standard: 0.016 ~ 0.052 mm (0.0006 ~ 0.0020 in.)
Service Limit: 0.14 mm (0.0055 in.)

Camshaft Bearing Clearance (ϕ22)
Standard: 0.020 ~ 0.062 mm (0.0008 ~ 0.0024 in.)
Service Limit: 0.15 mm (0.0059 in.)

★If any clearance exceeds the service limit, measure the diameter of the camshaft journal.

Camshaft Journal Diameter (ϕ18)
Standard: 17.966 ~ 17.984 mm (0.7073 ~ 0.7080 in.)
Service Limit: 17.94 mm (0.706 in.)

Camshaft Journal Diameter (ϕ22)
Standard: 21.959 ~ 21.980 mm (0.8645 ~ 0.8653 in.)
Service Limit: 21.93 mm (0.863 in.)

★If the camshaft journal diameter is less than the service limit, replace the camshaft with a new one and measure the clearance again.

★If the clearance still remains out of the limit, replace the cylinder head and the rocker case.

CAUTION

The cylinder head and rocker case are machined as a set, and must be replaced as a set.

Camshaft

KACR Inspection

The Kawasaki Automatic Compression Release (KACR) momentarily opens the exhaust valves on the compression stroke at very low speeds. This allows some of the compression pressure to escape, making it easy to turn over the engine during starting.

Due to the simplicity of the mechanism, no periodic maintenance is needed. There are only two symptoms of problems with the KACR mechanism [A]: compression is not released during starting, and compression is released during running.

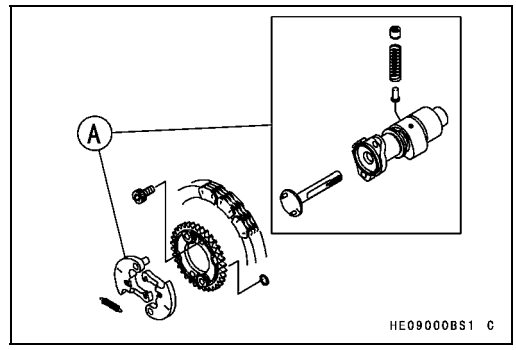

(1) If compression is not released during starting, the weights are not returning to their rest position.
- Remove the camshaft (see Camshaft Removal).
- Remove the KACR unit.
- Visually inspect the spring.

★If damaged, deformed, or missing, replace the spring.
- Remove the spring and move the weights back and forth.

★If the weights do not move smoothly, replace the KACR unit. Also inspect the exhaust rocker arm for any damage, and replace the rocker arm if necessary.

[A] Rest Position (compression is released)
[B] Weights
[C] Spring

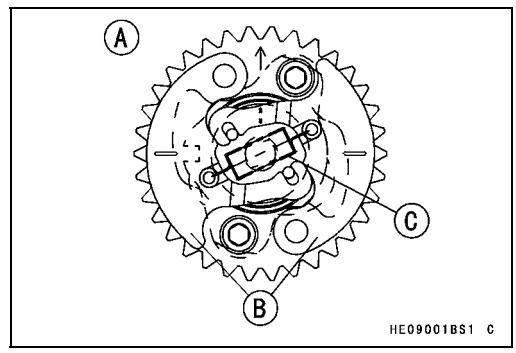

(2) If compression is released while the engine is running, the weights are not swinging out.
- Remove the spring and move the weights back and forth.

★If the weights do not move easily from the retracted position, replace the KACR unit. Also inspect the exhaust rocker arm for any damage, and replace the rocker arm if necessary.

[A] Running Position (compression is not released)
[B] Weights
[C] Spring

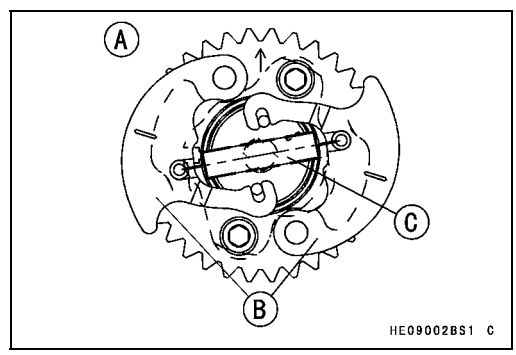

KACR Removal

- Remove:
  Camshaft (see Camshaft Removal)
  Camshaft Sprocket Bolts [A]
  KACR Unit [B]

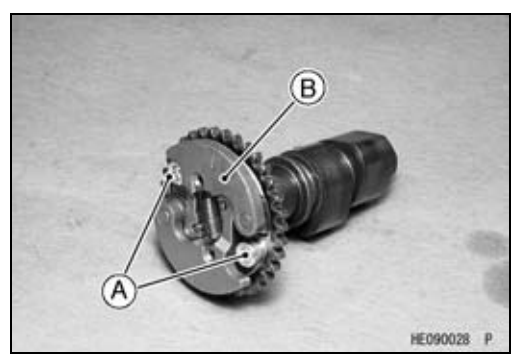

Camshaft

- Remove:
  Circlips [A]
  Weights [B]
  Spring [C]

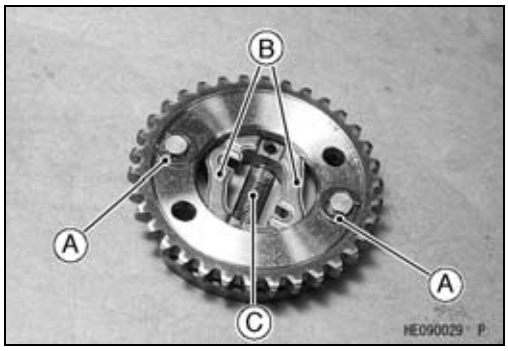

NOTE

○*Do not remove the shaft [A] and pin [B].*
○*If the parts are removed, they cannot be reinstalled.*

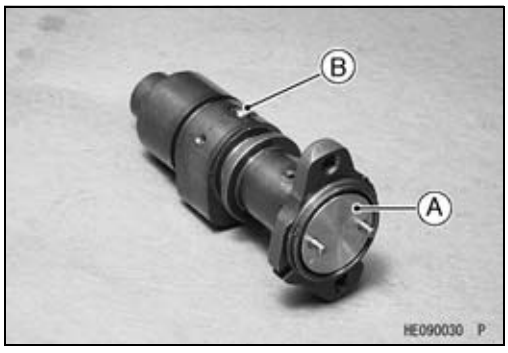

KACR Installation

- Install:
  Weights
  Circlips
  Spring [A]

○Hook the spring from the outside with the open side of the hook inwards.

- Install:
  KACR Unit
- Hook the arms [B] on the pins.
- Apply a non-permanent locking agent to the camshaft sprocket bolts [C] and tighten them.

Torque - Camshaft Sprocket Bolts: 12 N·m (1.2 kgf·m, 104 in·lb)

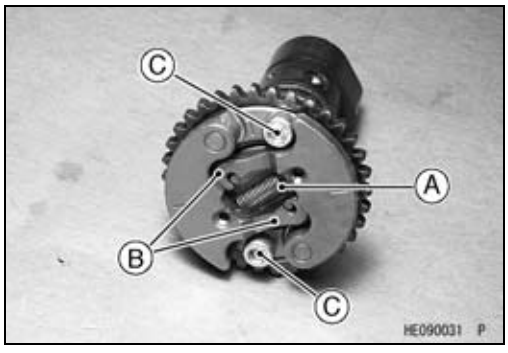

Camshaft Chain Removal

- Remove (left side view):
  Rear and Front Camshafts (see Camshaft Removal)
  Alternator Rotor (see Alternator Rotor Removal in the Electrical System chapter)
  Oil Pump (see Oil Pump Removal in the Engine Lubrication System chapter)
  Intermediate Shaft Chain Tensioner [A]
  Circlip [B] and Washer

Special Tool - Outside Circlip Pliers: 57001-144

- Remove:
  Intermediate Shaft Chain Guides [C]
  Position Plate Bolts [D] and Position Plate

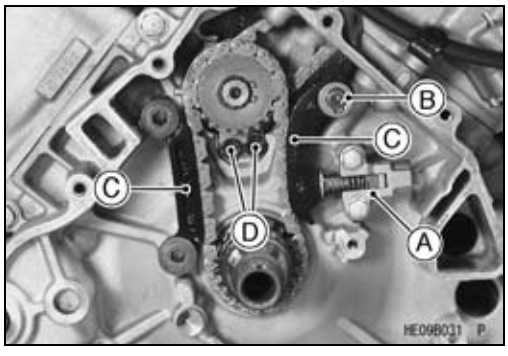

Camshaft

- Remove (right side view):
  Torque Converter Cover (see Torque Converter Cover Removal in the Converter System chapter)
- Using a M6 bolt [A], pull out the cover [B].

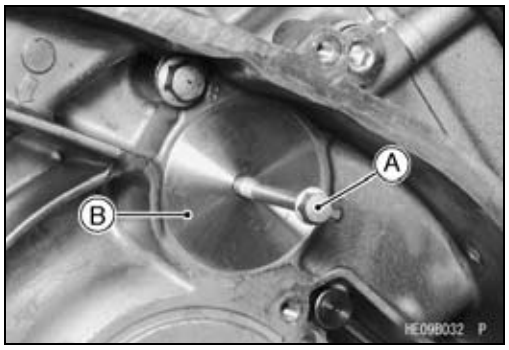

- Remove (left side view):
  Circlip [A]

  Special Tool - Outside Circlip Pliers: 57001-144
- Remove:
  Intermediate Shaft Sprocket [B]
  Intermediate Shaft Drive Chain [C]
  Rear Camshaft Chain [D]
  Front Camshaft Chain (right side)

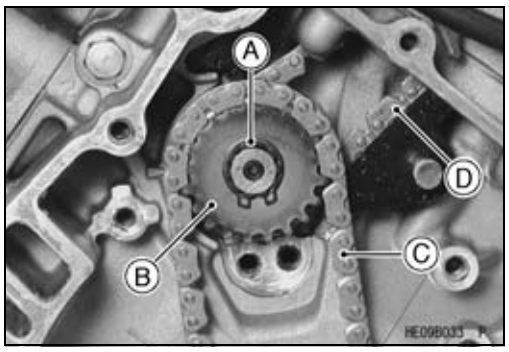

Camshaft Chain Installation

Rear Camshaft Chain

- Align the key grooves [A] on the crankshaft with the embossed line [B] on the crankcase (left side view).

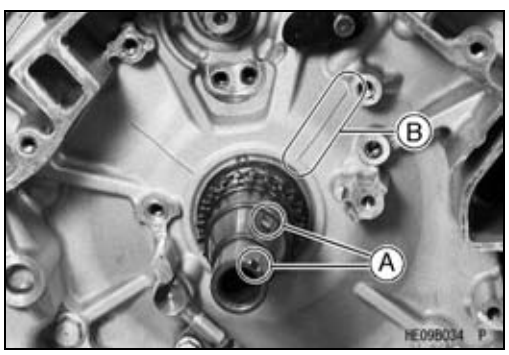

- Face the arrow [A] of the rear camshaft sprocket upward.
- Align the marks [B] on the weights with the rear cylinder head upper surface [C].
- Place the rear camshaft chain [D] onto the rear camshaft sprocket.

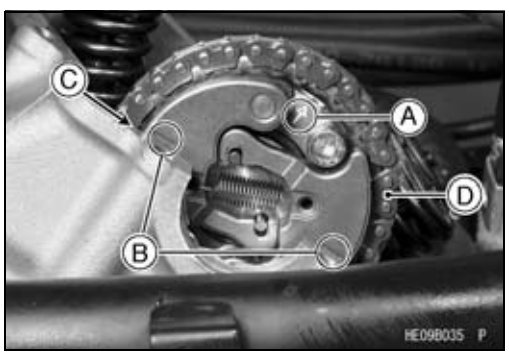

- Engage the camshaft and intermediate shaft chains on the intermediate shaft sprocket [A] and insert the intermediate shaft (left side view).
- Align the punch marks [B] on the sprocket with the embossed mark [C] on the crankcase.

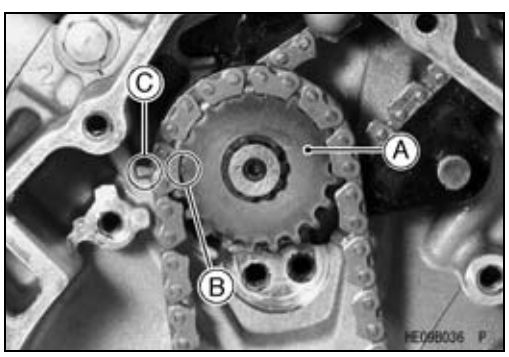

Camshaft

Front Camshaft Chain

- Install the circlip [A].

  Special Tool - Outside Circlip Pliers: 57001-144

- Rotate the crankshaft **clockwise** 270°.
- Align the key grooves [B] on the crankshaft with the embossed line [C] on the crankcase.

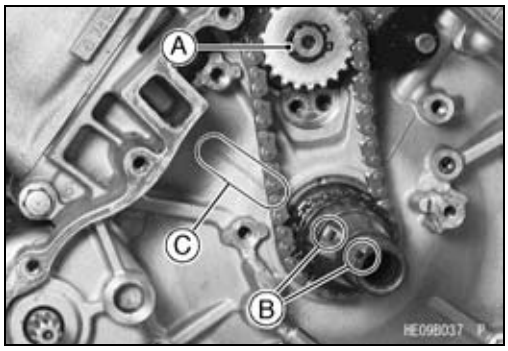

- Move the intermediate shaft [A] to the left side of the engine.
- Engage the front camshaft chain [B] with the sprocket on the intermediate shaft.

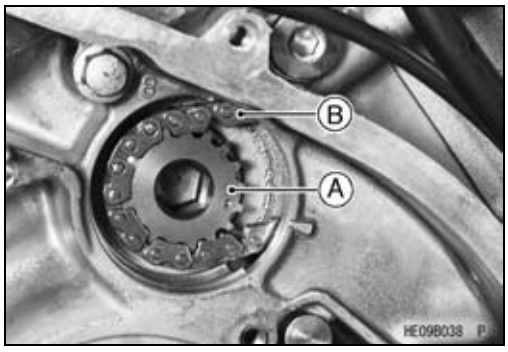

- Install (left side view):
  Position Plate [A]
- Tighten:

  Torque - Position Plate Bolts [B]: 8.8 N·m (0.90 kgf·m, 78 in·lb)

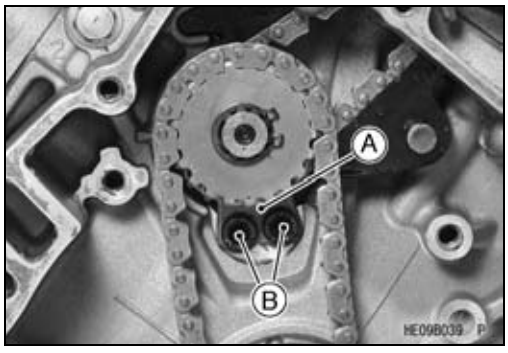

- Install:
  Intermediate Shaft Chain Guide [A] (front)
- Tighten:

  Torque - Intermediate Shaft Chain Guide Bolts [B]: 8.8 N·m (0.90 kgf·m, 78 in·lb)

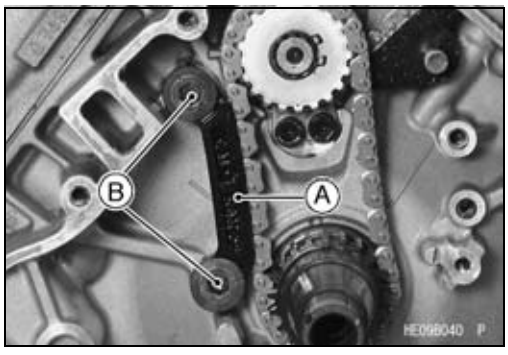

- Install:
  Intermediate Shaft Chain Guide [A] (Rear)
  Washer [B]
  Circlip [C]

  Special Tool - Outside Circlip Pliers: 57001-144

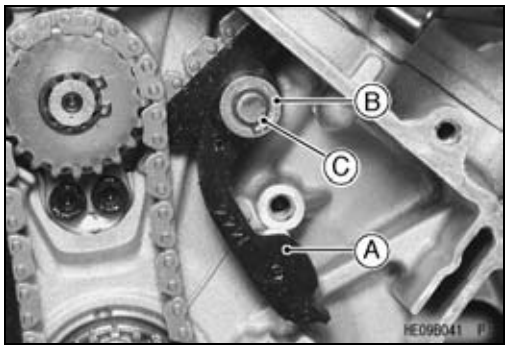

Camshaft

- Install the intermediate shaft chain tensioner [A] as follows:
- Release the stopper [B] and push the push rod [C] into the tensioner body.
- Insert a wire [D] into the rod hole to hold the rod in place.

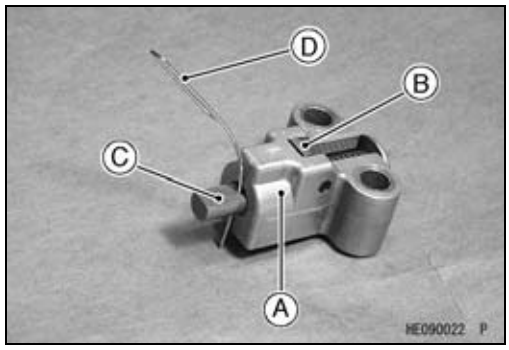

- Install:
  Intermediate Shaft Chain Tensioner [A]
- Tighten:

  Torque - Intermediate Shaft Chain Tensioner Bolts [B]: 8.8 N·m (0.90 kgf·m, 78 in·lb)
- Remove the wire [C] to free the push rod.

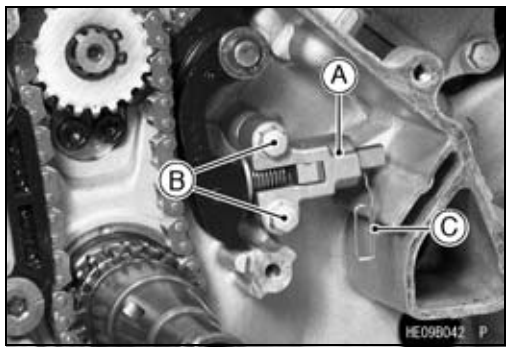

- Confirm that the punch mark [A] on the intermediate shaft sprocket (Right Side) is aligned with the embossed mark [B] on the crankcase.

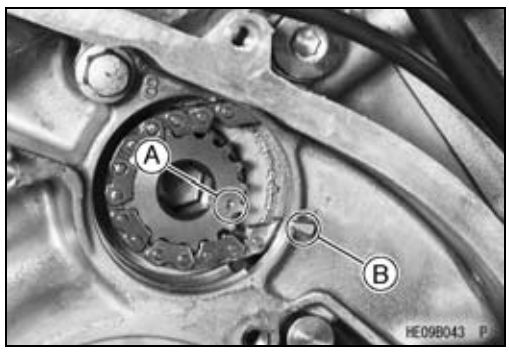

- Face the arrow mark [A] upward.
- Align the marks [B] on the weights with the front cylinder head upper surface [C].
- Place the front camshaft chain on the front camshaft sprocket.

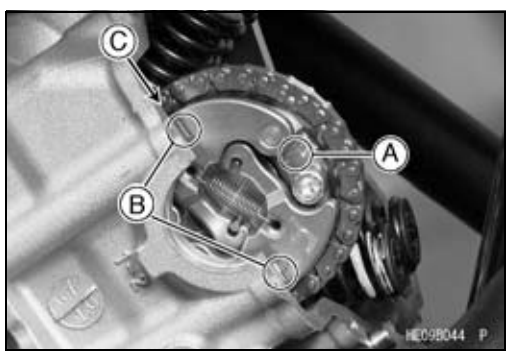

- Apply grease to the O-ring [A] and install the cover [B] into the right side of the crankcase so that the tapped hole [C] faces outward.

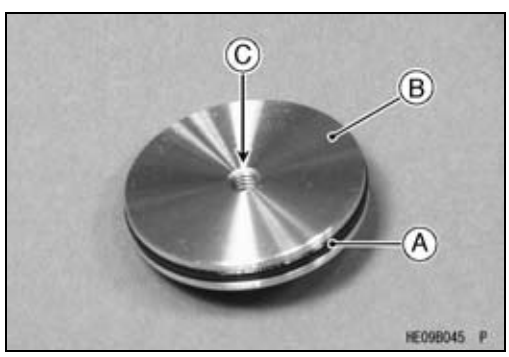

Camshaft

- Install:
  Rocker Cases (see Rocker Case Installation)
  Camshaft Chain Tensioners (see Camshaft Chain Tensioner Installation)
- Check the valve clearances (see Valve Clearance Inspection).

Camshaft Chain Guide Wear Inspection

- Visually inspect the rubber on the guides.

★If the rubber is damaged, cut, or is missing pieces, replace the guide.

Cylinder Head

Cylinder Compression Measurement

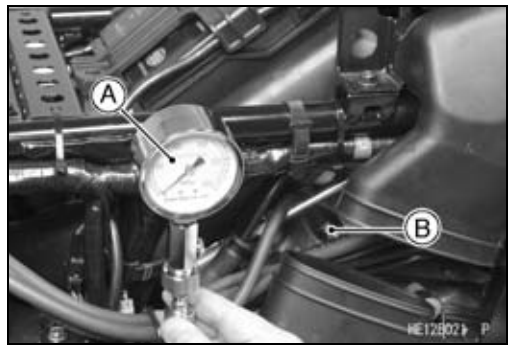

NOTE

○*Use the battery which is fully charged.*

- Warm up the engine thoroughly, and stop the engine.
- Remove the spark plug (see Spark Plug Removal in the Electrical System chapter).
- Attach the compression gauge [A] and adapter [B] firmly into the spark plug hole.

Special Tools - Compression Gauge, 20 kgf/cm²: 57001-221
Compression Gauge Adapter, M10 × 1.0: 57001-1458

- Hold the throttle wide open and crank the engine with the electric starter or the recoil starter several times.

When the gauge stops rising, stop cranking and read the gauge.

Cylinder Compression (Usable Range)
Electric Starter: 251 ~ 456 kPa (2.56 ~ 4.65 kgf/cm², 36 ~ 66 psi) @380 r/min (rpm)

The following table should be consulted if the obtainable compression reading is not within the usable range.

Problem	Diagnosis	Remedy (Action)
Cylinder compression is higher than usable range	Carbon accumulation on piston, cylinder head, and in combustion chamber possibly due to damaged valve stem oil seal and/or damaged piston oil rings (This may be indicated by white exhaust smoke).	Remove the carbon deposits and replace damaged parts if necessary.
	Incorrect cylinder head gasket thickness.	Replace the gasket with a standard part.
	Damaged or missing compression release cam spring	Replace the spring.
	Compression release weights do not move smoothly.	Replace the compression release unit.
Cylinder compression is lower than usable range	Gas leakage around cylinder head	Replace damaged gasket and check cylinder head warp.
	Bad condition of valve seating	Repair if necessary.
	Incorrect valve clearance.	Adjust the valve clearance.
	Incorrect piston/cylinder clearance	Replace the piston and/or cylinder
	Piston seizure.	Inspect the cylinder and liner and replace/repair the cylinder and/or piston as necessary.
	Bad condition of piston ring and/or piston ring grooves	Replace the piston and/or the piston rings.
	Compression release weights do not move smoothly	Replace the compression release unit

Cylinder Head

Cylinder Head Removal

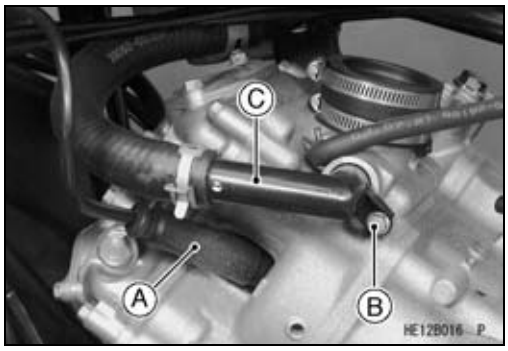

- Drain the coolant (see Coolant Change in the Periodic Maintenance chapter).
- Remove:
  Carburetor (see Carburetor Removal in the Fuel System chapter)
  Exhaust Pipe (see Muffler and Exhaust Pipe Removal)
  Thermostat (see Thermostat Removal in the Cooling System chapter)
  Spark Plug Cap [A]
  Water Pipe Bolt [B]
  Left Water Pipe [C]

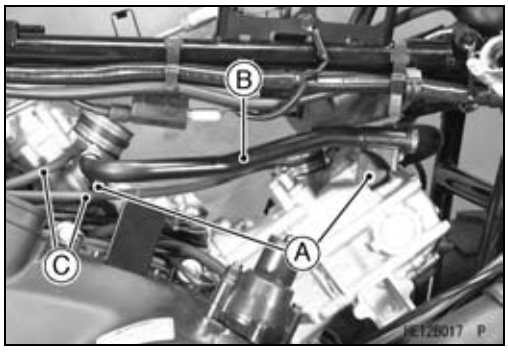

- Remove:
  Water Pipe Bolts [A]
  Right Water Pipe [B]
  Vacuum Hoses [C]
  Rocker Case (see Rocker Case Removal)
  Camshaft (see Camshaft Removal)

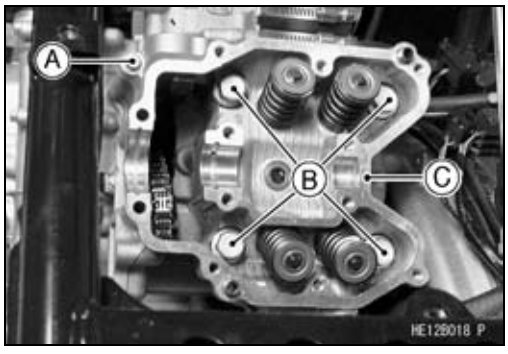

- Remove:
  Cylinder Head Bolt (M6) [A]
  Cylinder Head Bolts (M10) [B] and Washers
  Cylinder Head [C] and Gasket

○Lift the cylinder head to clear the dowel pins in the cylinder, and slide the cylinder head out of the frame.

Cylinder Head Installation

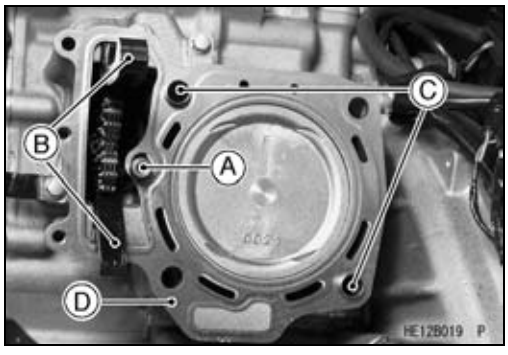

- Apply oil to the O-rings on the oil pipe [A], and insert the pipe.
- Install:
  Camshaft Chain Guides [B]
  Dowel Pins [C]
  New Cylinder Head Gasket [D]
- Tighten:

Torque - Front Cylinder Camshaft Chain Guide Bolt: 20 N·m (2.0 kgf·m, 14 ft·lb)

Cylinder Head

- Apply molybdenum disulfide oil to the threads and seating surface of the cylinder head bolts and both sides of the washers.
- Tighten the cylinder head bolts [A] following the tightening sequence as shown.

  First Torque - Cylinder Head Bolts (M10): 25 N·m (2.5 kgf·m, 18 ft·lb)

  Final Torque - Cylinder Head Bolts (M10): 49 N·m (5.0 kgf·m, 36 ft·lb)

- Tighten the cylinder head bolts (M6) [B].

  Torque - Cylinder Head Bolts (M6): 9.8 N·m (1.0 kgf·m, 87 in·lb)

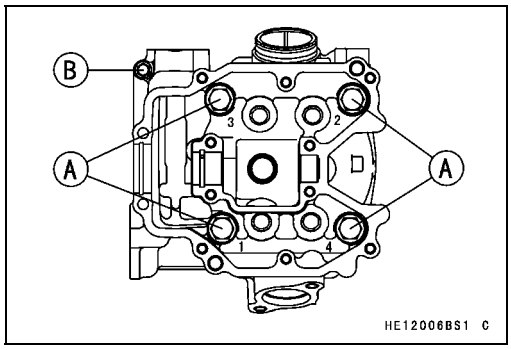

Cylinder Head Cleaning

- Remove the cylinder head (see Cylinder Head Removal).
- Scrape the carbon out of the combustion chamber and exhaust port with a suitable tool.
- Wash the head with a high-flash point solvent.
- Blow out any particles which may obstruct the oil passage in the cylinder head using compressed air.

Cylinder Head Warp Inspection

- Clean the cylinder head (see Cylinder Head Cleaning).
- Lay a straightedge across the lower surface of the cylinder head.
- Use a thickness gauge [A] to measure the space between the straightedge [B] and the head at several locations.

  Cylinder Head Warp
  Service Limit: 0.05 mm (0.002 in.)

★If the cylinder head is warped more than the service limit, replace it.

★If the cylinder head is warped less than the service limit, repair the head by lapping the lower surface with emery paper secured to a surface plate (first No. 200, then No. 400).

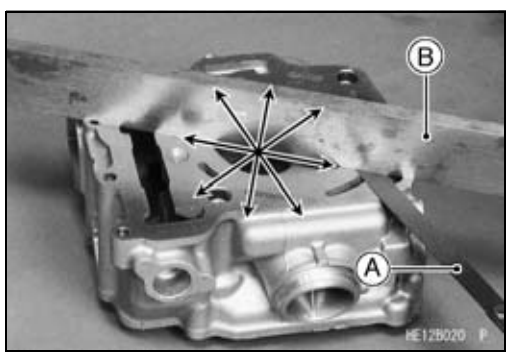

Valves

Valve Clearance Inspection

- Refer to the Valve Clearance Inspection in the Periodic Maintenance chapter.

Valve Clearance Adjustment

- Refer to the Valve Clearance Adjustment in the Periodic Maintenance chapter.

Valve Removal

- Remove the cylinder head (see Cylinder Head Removal).

○Mark and record the valve location so it can be installed in the original position.

- Using the valve spring compressor assembly, remove the valve.

Special Tools - Valve Spring Compressor Assembly: 57001-241 [A]
Valve Spring Compressor Adapter, ϕ22: 57001-1202 [B]

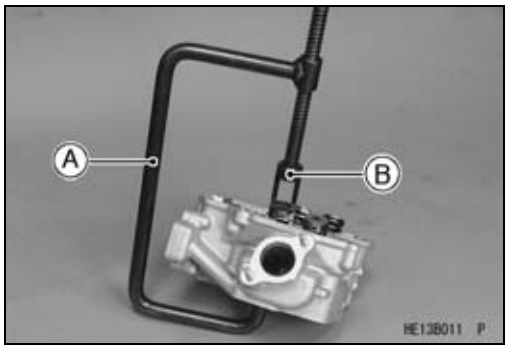

Valve Installation

- Replace the valve stem oil seal.

★If a new valve is to be used, check the valve-to-guide clearance (see Valve-to-Guide Clearance Measurement).

★If there is too little clearance, ream the valve guide (see Valve Guide Installation).

★If there is too much clearance, install a new valve guide (see Valve Guide Removal and Valve Guide Installation).

- Check the valve seat (see Valve Seat Inspection).
- Apply a thin coat of molybdenum disulfide grease to the valve stem.
- Install each spring so that the closed coil end faces downwards.

○The green paint on the spring faces upwards.

Valve Stem [A]
Oil Seal [B]
Spring Seat [C]
Spring [D]
Retainer [E]
Split Keepers [F]
Closed Coil End [G]

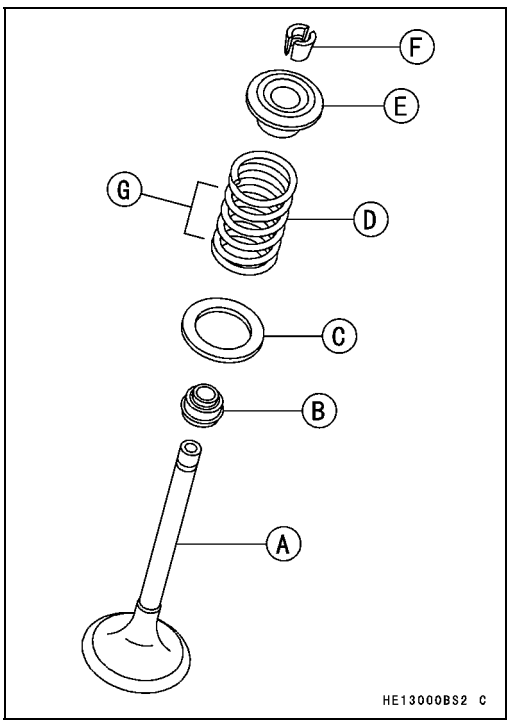

Valve Guide Removal

- Remove:

Valve (see Valve Removal)
Valve Stem Oil Seal

- Hammer lightly on the valve guide arbor [A] to remove the guide from the top of the head.

Special Tool - Valve Guide Arbor, ϕ5: 57001-1203

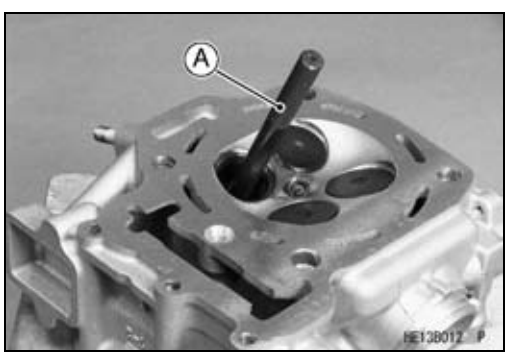

Valves

Valve Guide Installation

- Lightly oil the valve guide outer surface.
- Using the valve guide arbor [A], drive the valve guide [B] until its flange touches the cylinder head.

  Special Tool - Valve Guide Arbor, ϕ5: 57001-1203

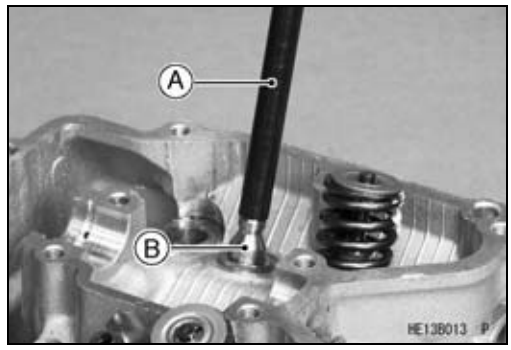

- Ream the valve guide with the valve guide reamer [A] , it may be necessary to ream the guide even if the old guide is reused.

  Special Tool - Valve Guide Reamer, ϕ5: 57001-1204

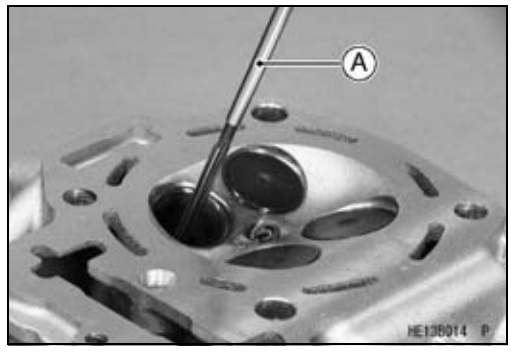

Valve-to-Guide Clearance Measurement

If a small bore gauge is not available, inspect the valve guide wear by measuring the valve to valve guide clearance with the wobble method as indicated below.

- Insert a new valve [A] into the guide [B] and set a dial gauge against the stem perpendicular to it as close as possible to the cylinder head mating surface.
- Move [C] the stem back and forth to measure valve/valve guide clearance.
- Repeat the measurement in a direction at a right angle to the first.

★If the reading exceeds the service limit, replace the guide.

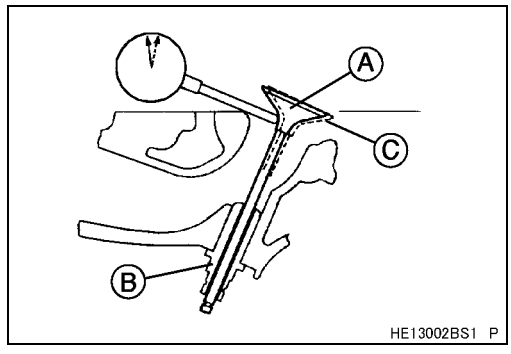

NOTE

○*The reading is not actual valve/valve guide clearance because the measuring point is above the guide.*

Valve/Valve Guide Clearance (Wobble Method)

Standard:

Exhaust	**0.09 ~ 0.17 mm (0.0035 ~ 0.0067 in.)**
Inlet	**0.03 ~ 0.11 mm (0.0012 ~ 0.0043 in.)**

Service Limit:

Exhaust	**0.37 mm (0.0146 in.)**
Inlet	**0.31 mm (0.0122 in.)**

Valves

Valve Seat Inspection

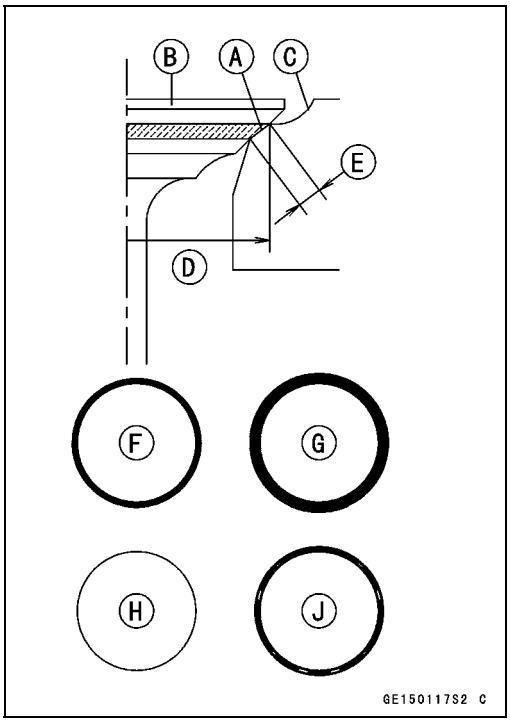

- Remove the valve (see Valve Removal).
- Check the valve seating surface [A] between the valve [B] and valve seat [C].

○Coat the valve seat with machinist's dye.
○Push the valve into the guide.
○Rotate the valve against the seat with a lapping tool.
○Pull the valve out, and check the seating pattern on the valve head. It must be the correct width and even all the way around.

- Measure the outside diameter [D] of the seating pattern on the valve seat.

★If the outside diameter of the valve seating pattern is too large or too small, repair the seat (see Valve Seat Repair).

Valve Seating Surface Outside Diameter
Exhaust: 25.2 ~ 25.4 mm (0.992 ~ 1.000 in.)
Inlet: 29.4 ~ 29.5 mm (1.157 ~ 1.165 in.)

NOTE

○*The valve stem and guide must be in good condition, or this check will not be valid.*

★If the valve seating pattern is not correct, repair the seat (see Valve Seat Repair).

- Measure the seat width [E] of the portion where there is no build-up carbon (white portion) of the valve seat with vernier calipers.

★If the width is too wide, too narrow or uneven, repair the seat (see Valve Seat Repair).
[F] Good
[G] Too Wide
[H] Too Narrow
[J] Uneven

Valve Seating Surface Width
Exhaust: 0.5 ~ 1.0 mm (0.02 ~ 0.04 in.)
Inlet: 0.5 ~ 1.0 mm (0.02 ~ 0.04 in.)

Valve Seat Repair (Valve Lapping)

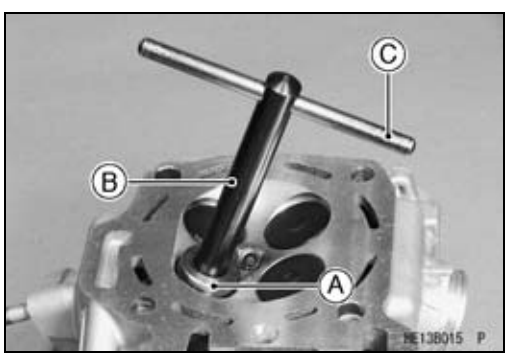

- Using the valve seat cutters [A], repair the valve seat.

Special Tools - Valve Seat Cutters:
Exhaust Valves:
Valve Seat Cutter, 45° - ϕ27.5: 57001-1114
Valve Seat Cutter, 32° - ϕ28: 57001-1119
Valve Seat Cutter, 60° - ϕ30: 57001-1123
Inlet Valves:
Valve Seat Cutter, 45° - ϕ30: 57001-1187
Valve Seat Cutter, 32° - ϕ33: 57001-1199
Valve Seat Cutter, 60° - ϕ30: 57001-1123
Holder and Bar:
Valve Seat Cutter Holder, ϕ5: 57001-1208 [B]
Valve Seat Cutter Holder Bar: 57001-1128 [C]

★If the manufacturer's instructions are not available, use the following procedure.

Valves

Seat Cutter Operation Care

1. This valve seat cutter is developed to grind the valve seat for repair. Therefore the cutter must not be used for other purposes than seat repair.
2. Do not drop or shock the valve seat cutter, or the diamond particles may fall off.
3. Do not fail to apply engine oil to the valve seat cutter before grinding the seat surface. Also wash off ground particles sticking to the cutter with washing oil.

NOTE

○*Do not use a wire brush to remove the metal particles from the cutter. It will take off the diamond particles.*

4. Setting the valve seat cutter holder in position, operate the cutter in one hand. Do not apply too much force to the diamond portion.

NOTE

○*Prior to grinding, apply engine oil to the cutter and during the operation, wash off any ground particles sticking to the cutter with washing oil.*

5. After use, wash it with washing oil and apply thin layer of engine oil before storing.

Marks Stamped on the Cutter

The marks stamped on the back of the cutter [A] represent the following.

60° ..... Cutter angle [B]

37.5ϕ ..... Outer diameter of cutter [C]

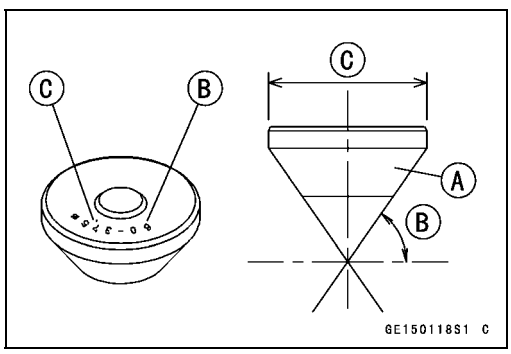

Operating Procedures

- Clean the seat area carefully.
- Coat the seat with machinist's dye.
- Fit a 45° cutter into the holder and slide it into the valve guide.
- Press down lightly on the handle and turn it right or left. Grind the seating surface only until it is smooth.

CAUTION

Do not grind the seat too much. Overgrinding will reduce valve clearance by sinking the valve into the head. If the valve sinks too far into the head, it will be impossible to adjust the clearance, and the cylinder head must be replaced.

Widened Width [A] of engagement by machining with 45° cutter
Ground Volume [B] by 32° cutter
32° [C]
Correct Width [D]
Ground Volume [E] by 60° cutter
60° [F]

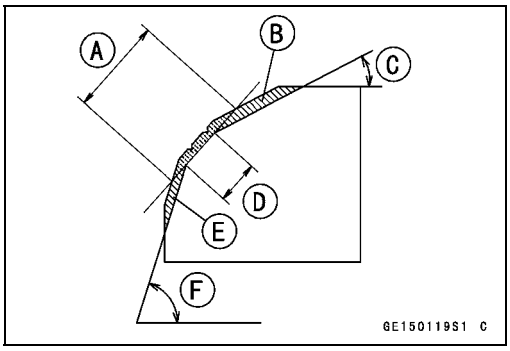

- Measure the outside diameter of the seating surface with vernier calipers.

★If the outside diameter of the seating surface is too small, repeat the 45° grind [A] until the diameter is within the specified range.
Original Seating Surface [B]

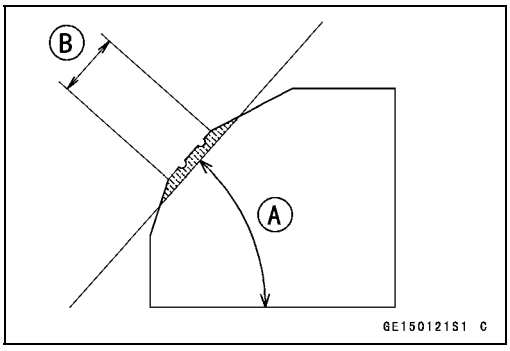

NOTE

○*Remove all pittings of flaws from 45° ground surface.*
○*After grinding with 45° cutter, apply thin coat of machinist's dye to seating surface. This makes seating surface distinct and 32° and 60° grinding operation easier.*
○*When the valve guide is replaced, be sure to grind with 45° cutter for centering and good contact.*

★If the outside diameter (O.D.) [A] of the seating surface is too large, make the 32° grind described below.

★If the outside diameter of the seating surface is within the specified range, measure the seat width as described below.

- Grind the seat at a 32° angle [B] until the seat O.D. is within the specified range.

○To make the 32° grind, fit a 32° cutter into the holder, and slide it into the valve guide.
Turn the holder one turn at a time while pressing down very lightly. Check the seat after each turn.

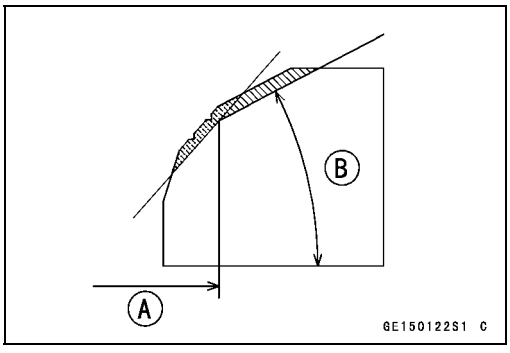

CAUTION
The 32° cutter removes material very quickly. Check the seat outside diameter frequently to prevent overgrinding.

After making the 32° grind, return to the seat O.D. measurement step above.

- To measure the seat width, use vernier calipers to measure the width of the 45° angle portion of the seat at several places around the seat.

★If the seat width is too narrow, repeat the 45° grind until the seat is slightly too wide, and then return to the seat O.D. measurement step above.

Valves

★If the seat width is too wide, make the 60° [A] grind described below.
★If the seat width is within the specified range, lap the valve to the seat as described below.
● Grind the seat at a 60° angle until the seat width is within the specified range.
○To make the 60° grind, fit 60° cutter into the holder, and slide it into the valve guide.
○Turn the holder, while pressing down lightly.
○After making the 60° grind, return to the seat width measurement step above.
Correct Width [B]

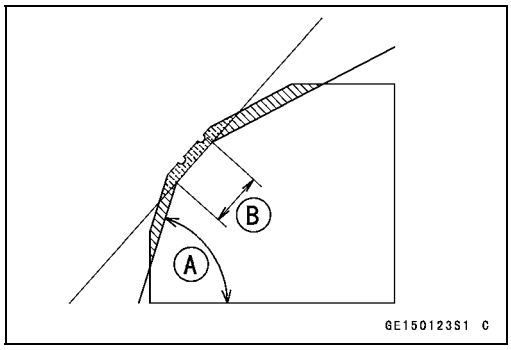

● Lap the valve to the seat, once the seat width and O.D. are within the ranges specified above.
○Put a little coarse grinding compound on the face of the valve in a number of places around the valve head.
○Spin the valve against the seat until the grinding compound produces a smooth, matched surface on both the seat and the valve.
○Repeat the process with a fine grinding compound.
[A] Lapper
[B] Valve Seat
[C] Valve

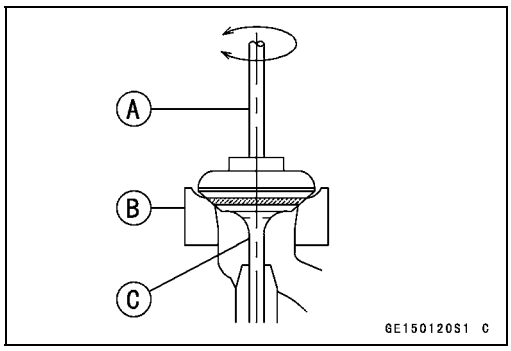

● The seating area should be marked about in the middle of the valve face.
★If the seat area is not in the right place on the valve, check to be sure the valve is the correct part. If it is, it may have been refaced too much; replace it.
● Be sure to remove all grinding compound before assembly.
● When the engine is assembled, be sure to adjust the valve clearance (see Valve Clearance Adjustment in the Periodic Maintenance chapter).

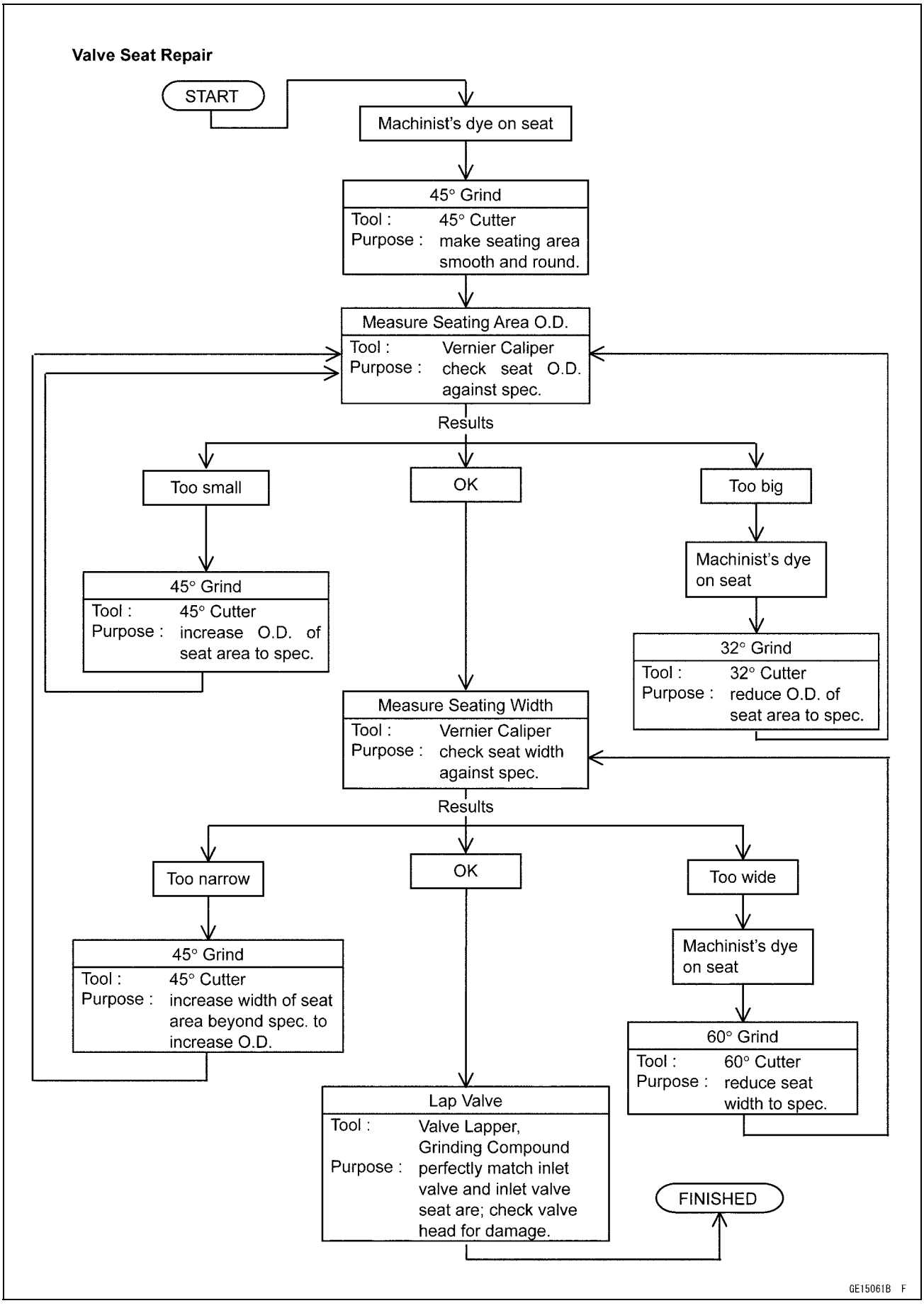
Valve Seat Repair
START
Machinist's dye on seat
45° Grind
Tool : 45° Cutter
Purpose : make seating area smooth and round.
Measure Seating Area O.D.
Tool : Vernier Caliper
Purpose : check seat O.D. against spec.
Results
Too small
OK
Too big
45° Grind
Tool : 45° Cutter
Purpose : increase O.D. of seat area to spec.
Machinist's dye on seat
32° Grind
Tool : 32° Cutter
Purpose : reduce O.D. of seat area to spec.
Measure Seating Width
Tool : Vernier Caliper
Purpose : check seat width against spec.
Results
Too narrow
OK
Too wide
45° Grind
Tool : 45° Cutter
Purpose : increase width of seat area beyond spec. to increase O.D.
Machinist's dye on seat
60° Grind
Tool : 60° Cutter
Purpose : reduce seat width to spec.
Lap Valve
Tool : Valve Lapper, Grinding Compound
Purpose : perfectly match inlet valve and inlet valve seat are; check valve head for damage.
FINISHED
GE15061B F

Cylinder and Piston

Cylinder Removal

- Remove:
  Cylinder Head (see Cylinder Head Removal)
  Oil Pipe [A]
  Chain Guide [B]
  Cylinder Bolts [C]
  Cylinder [D]
  Cylinder Base Gasket

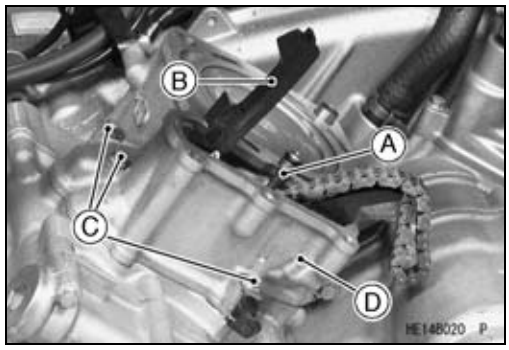

Piston Removal

- Remove the cylinder block (see Cylinder Removal).
- Place a piece of clean cloth under the piston and remove the piston pin snap rings [A] from the outside of each piston.

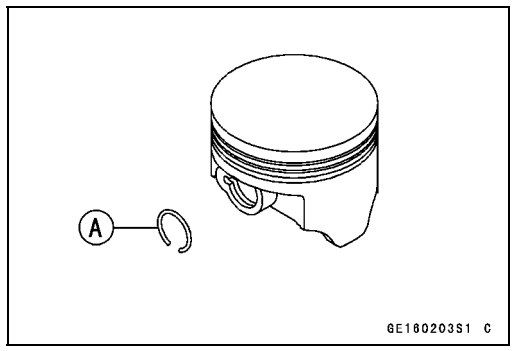

CAUTION

Do not reuse snap rings, as removal weakens and deforms them. They could fall out and score the cylinder wall.

- Using the piston pin puller assembly (special tool), remove the piston pins.

  Special Tools - Piston Pin Puller Assembly [A]: 57001-910
  Piston Pin Puller Adapter, ϕ14 [B]: 57001-1211

- Remove the piston.

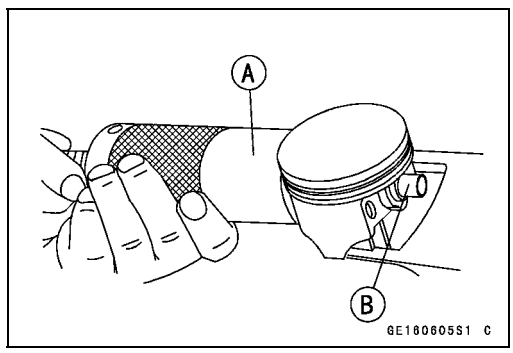

- Carefully spread the ring opening with your thumbs and then push up on the opposite side of the ring [A] to remove it.
- Remove the 3-piece oil ring with your thumbs in the same manner.

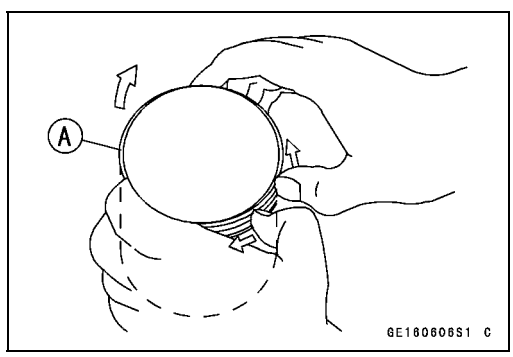

Cylinder, Piston Installation

NOTE

○*If a new piston or cylinder is used, check piston to cylinder clearance (see Piston/Cylinder Clearance), and use new piston rings.*

Cylinder and Piston

NOTE

○*The oil ring rails have no "top" or "bottom".*

- Install the oil ring expander [A] in the bottom piston ring groove so the ends [B] butt together.
- Install the oil ring steel rails, one above the expander and one below it.

○Spread the rail with your thumbs, but only enough to fit the rail over the piston.

○Release the rail into the bottom piston ring groove.

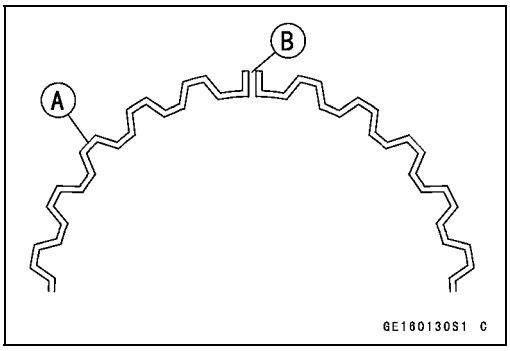

- Do not mix up the top ring and second ring.
- Install the top ring [A] so that the "**R**" mark [B] faces up.
- Install the second ring [C] so that the "**RN**" mark [D] faces up.

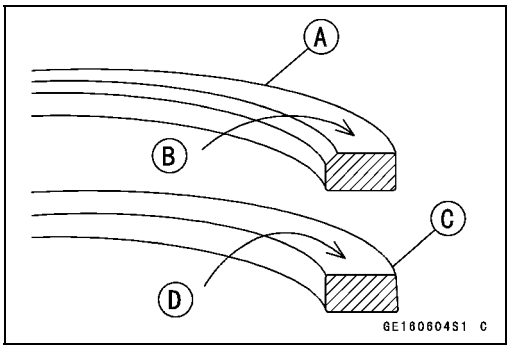

- The piston ring openings must be positioned as shown in the figure. The openings of the oil ring steel rails must be about 30 ~ 40° [F] of angle from the opening of the top ring.
  Top Ring [A]
  Second Ring [B]
  Oil Ring Steel Rails [C]
  Oil Ring Expander [D]
  F mark [E] must be faced toward Front Side for front and rear pistons
  Opening Positions [G]

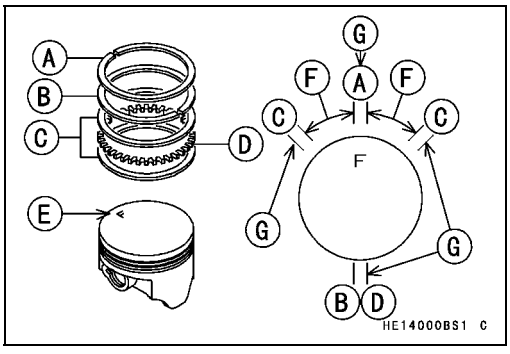

- Fit a new piston pin snap ring into the side of the piston so that the ring opening [A] does not coincide with the slit [B] of the piston pin hole.

○When installing the piston pin snap ring, compress it only enough to install it and no more.

- Apply engine oil to the cylinder bore and, piston skirt.

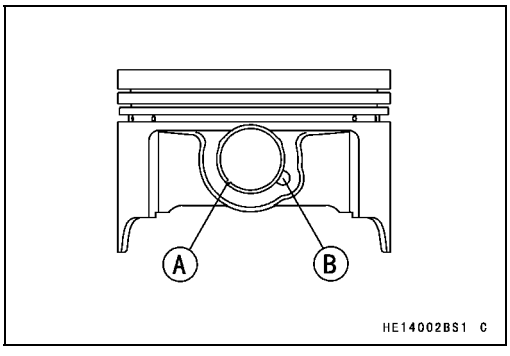

- Install:
  Dowel Pins [A]
  New Cylinder Base Gasket [B]

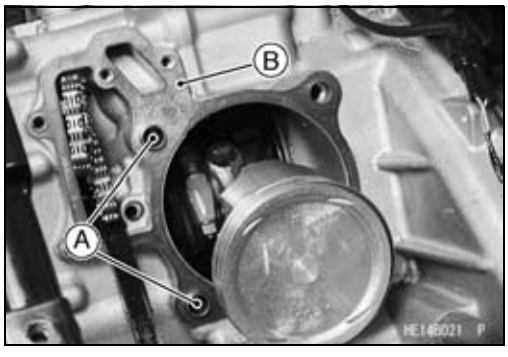

Cylinder and Piston

- Install:
  Cylinder
  Clamp [A] (rear only)
- Tighten:

Torque - Cylinder Bolts [B]: 9.8 N·m (1.0 kgf·m, 87 in·lb)

- Install:
  Chain Guide [C]
- Apply oil to the O-ring on the oil pipe [D], and insert the pipe.

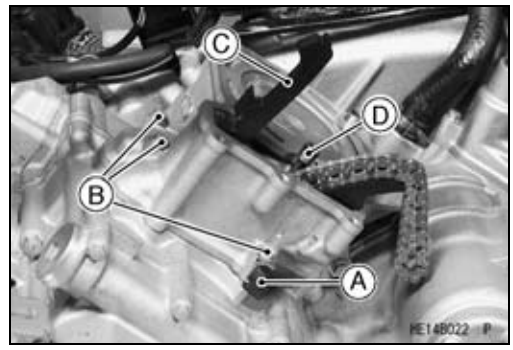

Cylinder Wear Inspection

- Since there is a difference in cylinder wear in different directions, take a side-to-side and a front-to-back measurement at each of the three locations (total of six measurements) shown in the figure.

★If any of the cylinder inside diameter measurements exceeds the service limit, replace the cylinder.
10 mm (0.4 in.) [A]
60 mm (2.4 in.) [B]
20 mm (0.8 in.) [C]

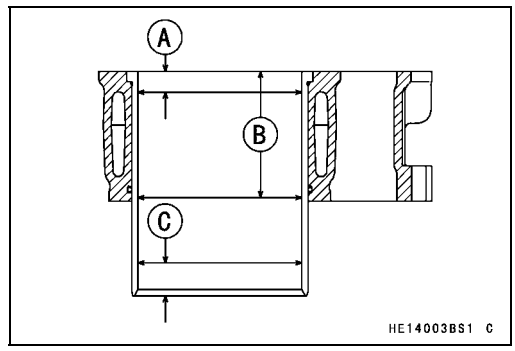

Cylinder Inside Diameter

Standard: **84.994 ~ 85.006 mm (3.3462 ~ 3.3467 in.), and less than 0.01 mm (0.0004 in.) difference between any two measurements.**

Service Limit: **85.10 mm (3.350 in.), or more than 0.05 mm (0.0020 in.) difference between any two measurements.**

Piston Wear Inspection

- Measure the outside diameter [A] of each piston 5 mm (0.20 in.) [B] up from the bottom of the piston at a right angle to the direction of the piston pin.

★If the measurement is under service limit, replace the piston.

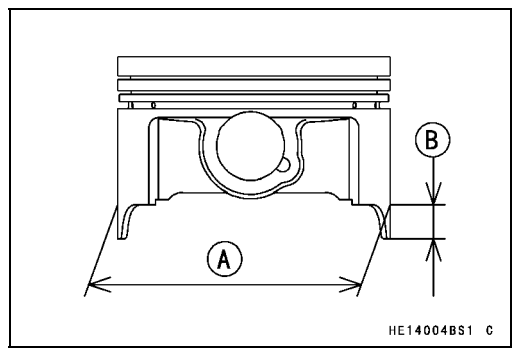

Piston Diameter

Standard: **84.964 ~ 84.979 mm (3.3450 ~ 3.3456 in.)**

Service Limit: **84.81 mm (3.3390 in.)**

Piston/Cylinder Clearance Inspection

- Subtract the piston diameter from the cylinder inside diameter to get the piston/cylinder clearance.

Piston/Cylinder Clearance

Standard: **0.015 ~ 0.042 mm (0.0006 ~ 0.0017 in.)**

Cylinder and Piston

Piston Ring, Piston Ring Groove Wear Inspection

- Check for uneven groove wear by inspecting the ring seating.

★The rings should fit perfectly parallel to groove surfaces. If not, replace the piston and all the piston rings.

- With the piston rings in their grooves, make several measurements with a thickness gauge [A] to determine piston ring/groove clearance.

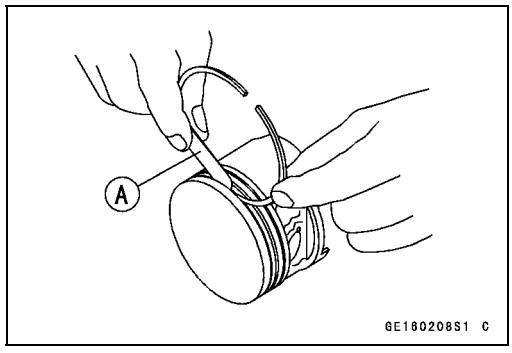

Piston Ring/Groove Clearance

Standard:

Top	**0.04 ~ 0.08 mm (0.0016 ~ 0.0032 in.)**
Second	**0.03 ~ 0.07 mm (0.0012 ~ 0.0028 in.)**

Service Limit:

Top	**0.18 mm (0.0071 in.)**
Second	**0.17 mm (0.0067 in.)**

★If the piston ring/groove clearance is greater than the service limit, measure the ring thickness and groove width as follows to decide whether to replace the rings, the piston or both.

Piston Ring Groove Width Inspection

- Measure the piston ring groove width.

○Use a vernier caliper at several points around the piston.

Piston Ring Groove Width

Standard:

Top	**1.03 ~ 1.05 mm (0.0405 ~ 0.0413 in.)**
Second	**1.02 ~ 1.04 mm (0.0402 ~ 0.0409 in.)**

Service Limit:

Top	**1.13 mm (0.0445 in.)**
Second	**1.12 mm (0.0441 in.)**

★If the width of any of the two grooves is wider than the service limit at any point, replace the piston.

Piston Ring Thickness Inspection

- Measure the piston ring thickness.

○Use a micrometer to measure at several points around the ring.

Piston Ring Thickness

Standard:

Top	**0.97 ~ 0.99 mm (0.0382 ~ 0.0390 in.)**
Second	**0.97 ~ 0.99 mm (0.0382 ~ 0.0390 in.)**

Service Limit:

Top	**0.90 mm (0.035 in.)**
Second	**0.90 mm (0.035 in.)**

★If any of the measurements is less than the service limit on either of the rings, replace all the rings.

NOTE

○*When using new rings in a used piston, check for uneven groove wear. The rings should fit perfectly parallel to the groove sides. If not, replace the piston.*

Cylinder and Piston

Piston Ring End Gap Inspection

- Place the piston ring [A] inside the cylinder, using the piston to locate the ring squarely in place. Set it close to the bottom of the cylinder, where cylinder wear is low.
- Measure the gap [B] between the ends of the ring with a thickness gauge.

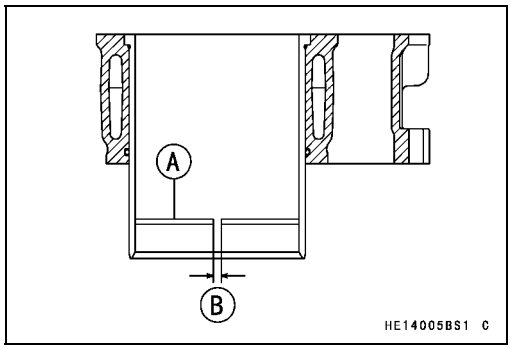

Piston Ring End Gap

Standard:

Top	**0.20 ~ 0.30 mm (0.0079 ~ 0.0118 in.)**
Second	**0.30 ~ 0.45 mm (0.0118 ~ 0.0177 in.)**
Oil	**0.20 ~ 0.70 mm (0.0079 ~ 0.0276 in.)**

Service Limit:

Top	**0.60 mm (0.0236 in.)**
Second	**0.75 mm (0.0295 in.)**
Oil	**1.00 mm (0.0394 in.)**

★If the end gap of either ring is greater than the service limit, replace all the rings.

Exhaust System

This vehicle is equipped with a spark arrester approved for off-road use by the United States Forest Service. It must be properly maintained to ensure its efficiency. In accordance with the Periodic Maintenance Chart, clean the spark arrester.

Spark Arrester Cleaning

- Refer to the Spark Arrester Cleaning in the Periodic Maintenance chapter.

Muffler and Exhaust Pipe Removal

- Remove:
  Seat (see Seat Removal in the Frame chapter)
  Left Side Cover (see Left Side Cover Removal in the Frame chapter)
  Bolts [A]
  Rear Exhaust Pipe Cover [B]
  Bolts [C]
  Middle Exhaust Pipe Cover [D]

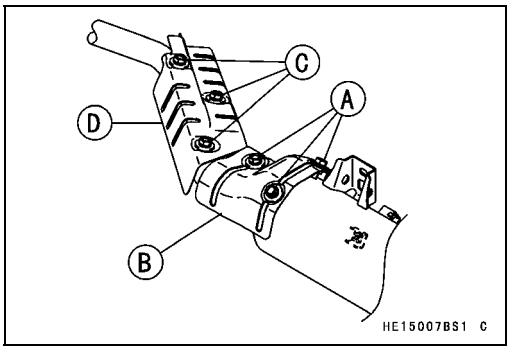

- Remove:
  Bolts [A]
  Front Exhaust Pipe Cover [B]

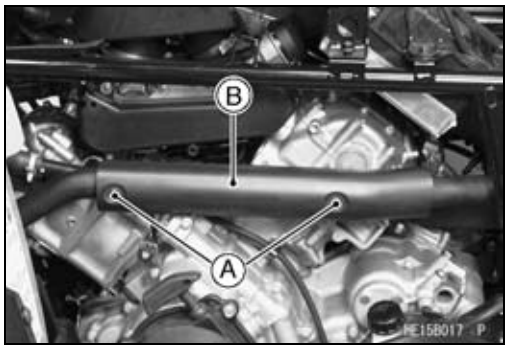

- Remove:
  Rear Exhaust Pipe Nuts [A]

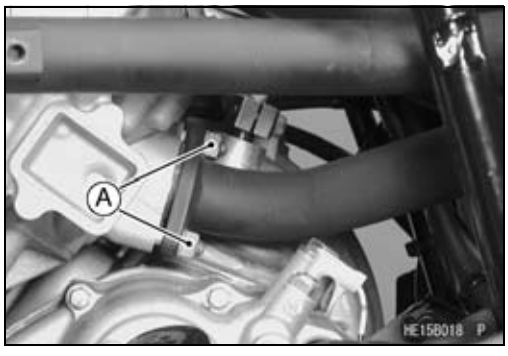

- Remove:
  Muffler Clamp Bolt [A]
  Muffler Mounting Bolts [B] and Washers
  Muffler [C] and Rear Exhaust Pipe

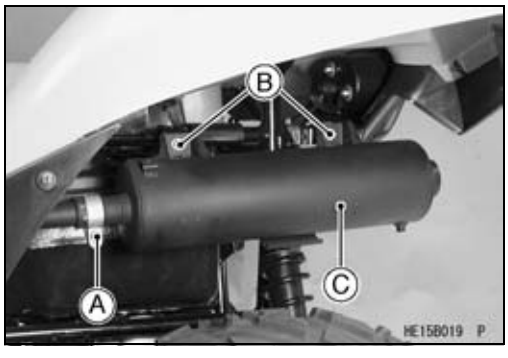

Exhaust System

- Remove:
  Front Exhaust Pipe Nuts [A]

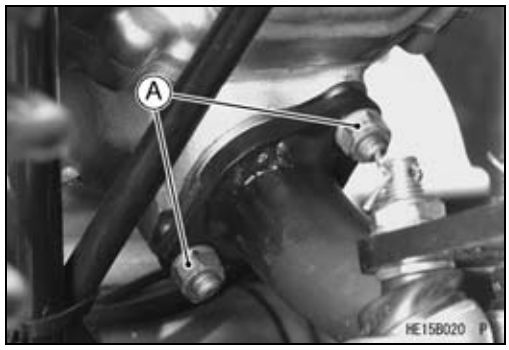

- Move the front exhaust pipe rear end [A] under the fuel tank and remove the pipe forward.

Muffler and Exhaust Pipe Installation (KVF750-A1/B1)

- If the muffler cover [A] is removed, tighten them.

  Torque - Muffler Cover Bolts [B]: 8.8 N·m (0.90 kgf·m, 78 in·lb)

- Replace the exhaust pipe gaskets [C] and clamp gasket [D] with new ones.
- Install (But do not tighten the following nuts and bolts.):
  Front Exhaust Pipe [E], Clamp [F], Muffler and Nuts
  Rear Exhaust Pipe [G] and Nuts
  Muffler Mounting Bolts [H] and Washers [I]
- Tighten:

  Torque - Exhaust Pipe Holder Nuts: 17 N·m (1.7 kgf·m, 13 ft·lb)

- Tighten the muffler mounting nuts [M] (flange nut) and then the locknuts [N].

○Hold the nut while tightening the locknuts.

  Torque - Muffler Mounting Nuts: 20 N·m (2.0 kgf·m, 14 ft·lb)
  Muffler Mounting Locknuts: 31 N·m (3.2 kgf·m, 23 in·lb)
  Muffler Clamp Bolts: 8.8 N·m (0.90 kgf·m, 78 in·lb)

- Install:
  Front Exhaust Cover [J]
  Middle Exhaust Cover [K]
  Rear Exhaust Cover [L]

  Torque - Exhaust Cover Bolts: 8.8 N·m (0.90 kgf·m, 78 in·lb)

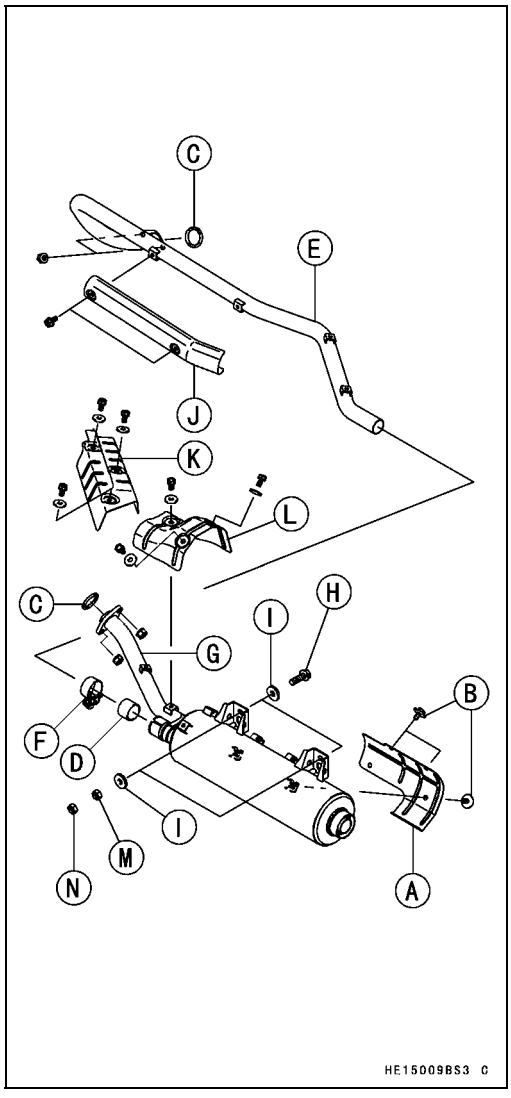

Exhaust System

Muffler and Exhaust Pipe Installation (KVF750A6F ~/B6F ~/ C7F ~)

- If the muffler cover [A] is removed, tighten them.

  Torque - Muffler Cover Bolts [B]: 8.8 N·m (0.90 kgf·m, 78 in·lb)

- Replace the exhaust pipe gaskets [C] and clamp gasket [D] with new ones.
- Install (But do not tighten the following nuts and bolts.):
  Front Exhaust Pipe [E], Clamp [F], Muffler and Nuts
  Rear Exhaust Pipe [G] and Nuts
  Muffler Mounting Bolts [H] and Washers [I]
- Tighten:

  Torque - Exhaust Pipe Holder Nuts: 17 N·m (1.7 kgf·m, 13 ft·lb)

- Tighten the muffler mounting nuts [N] (flange nut) and then the locknuts [O].

○Hold the nut while tightening the locknuts.

Torque - Muffler Mounting Nuts: 20 N·m (2.0 kgf·m, 14 ft·lb)
Muffler Mounting Locknuts: 31 N·m (3.2 kgf·m, 23 in·lb)
Muffler Clamp Bolts: 8.8 N·m (0.90 kgf·m, 78 in·lb)

- Install:
  Front Exhaust Cover (1) [J]
  Front Exhaust Cover (2) [K]
  Middle Exhaust Cover [L]
  Rear Exhaust Cover [M]

  Torque - Exhaust Cover Bolts: 8.8 N·m (0.90 kgf·m, 78 in·lb)

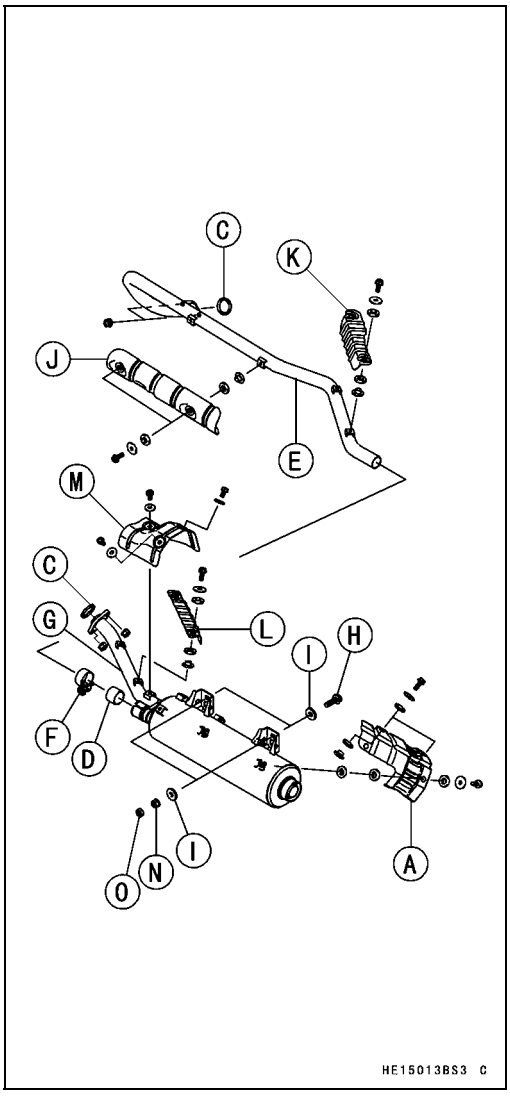

Exhaust System Inspection

- Before removing the exhaust system, check for signs of leakage at the exhaust pipe gasket in the cylinder head and at the muffler clamp.

★If there are signs of leakage around the exhaust pipe gasket, it should be replaced. If the muffler-to-exhaust pipe joint leaks, tighten the clamp.

- Remove the exhaust pipe and muffler (see Muffler and Exhaust Pipe Removal).
- Inspect the gasket for damage and signs of leakage.

★If the gasket is damaged or has been leaking, replace it.

- Check the exhaust pipe and muffler for dents, cracks, rust and holes.

★If the exhaust pipe or muffler is damaged or has holes, it should be replaced for best performance and least noise.

Converter System

Table of Contents

Exploded View

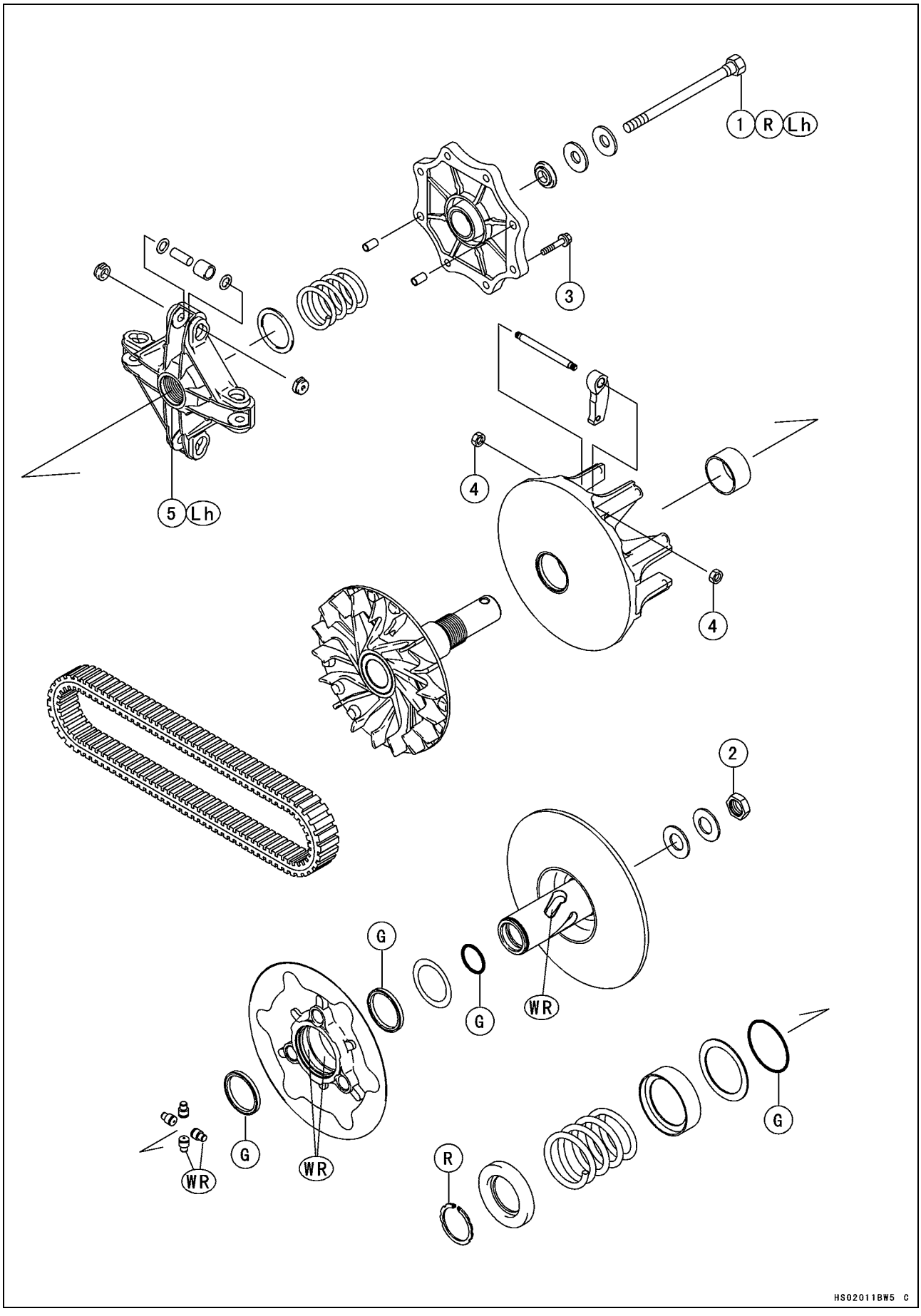

Exploded View

No.	Fastener	Torque			Remarks
		N·m	kgf·m	ft·lb	
1	Drive Pulley Bolt	93	9.5	69	R, Lh
2	Driven Pulley Nut	93	9.5	69	
3	Drive Pulley Cover Bolts	13	1.3	113 in·lb	
4	Ramp Weight Nuts	6.9	0.70	61 in·lb	
5	Spider	275	28	203	Lh

G: Apply grease.
Lh: Left-hand Threads
R: Replacement Parts
WR: Apply grease (WR500-No.2 KYODO YUSHI, POWER LITE WR #2 KYODO YUSHI, or SERAN -HV TOTAL FINA).

Exploded View

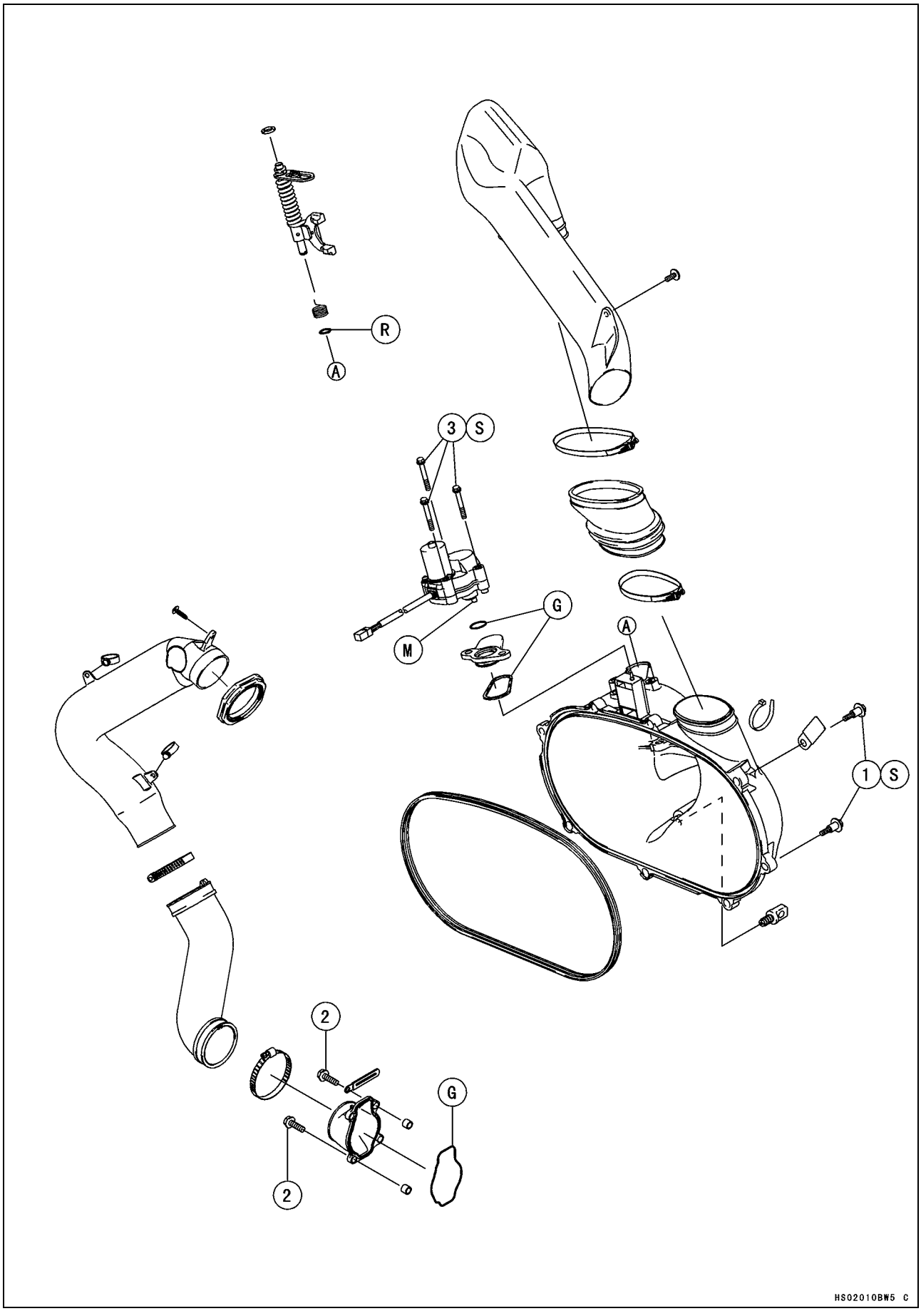

Exploded View

No.	Fastener	Torque			Remarks
		N·m	kgf·m	ft·lb	
1	Torque Converter Cover Bolts	8.8	0.90	78 in·lb	S
2	Joint Duct Bolts	8.8	0.90	78 in·lb	
3	Engine Brake Actuator Mounting Bolts	8.8	0.90	78 in·lb	S

G: Apply grease.
M: Apply molybdenum disulfide grease.
R: Replacement Part
S: Follow the specific tightening sequence.

Specifications

Item	Standard	Service Limit
Torque Converter		
Actuator Lever Guide Shoe	– – –	6 mm (0.24 in.)
Drive Belt		
Belt Width	29.7 ~ 30.3 mm (1.169 ~ 1.193 in.)	28.0 mm (1.102 in.)
Belt Deflection	22 ~ 27 mm (0.87 ~ 1.06 in.)	– – –
Drive Pulley		
Shoe Side Clearance	Up to 0.20 mm (0.008 in.) (in the text)	– – –
Cover Bushing Inside Diameter	27.985 ~ 28.085 mm (1.1018 ~ 1.1057 in.)	28.12 mm (1.107 in.)
Sheave Bushing Inside Diameter	37.985 ~ 38.085 mm (1.4955 ~ 1.4994 in.)	38.12 mm (1.501 in.)
Spring Free Length	60.0 mm (2.36 in.)	– – –
Driven Pulley		
Sheave Bushing Inside Diameter	40.000 ~ 40.039 mm (1.5748 ~ 1.5763 in.)	40.07 mm (1.578 in.)
Spring Free Length	75.1 mm (2.96 in.)	– – –

Special Tools

Outside Circlip Pliers:
57001-144

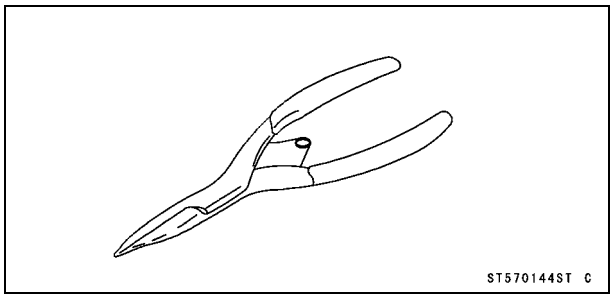

Drive & Driven Pulley Holder:
57001-1412

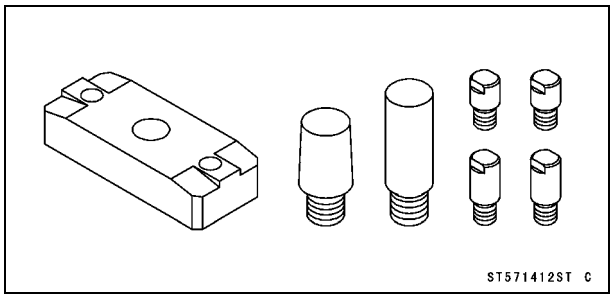

Drive Pulley Puller Bolt:
57001-1429

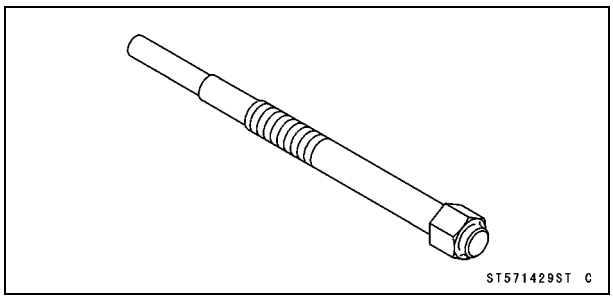

Pulley Holder Attachment:
57001-1472

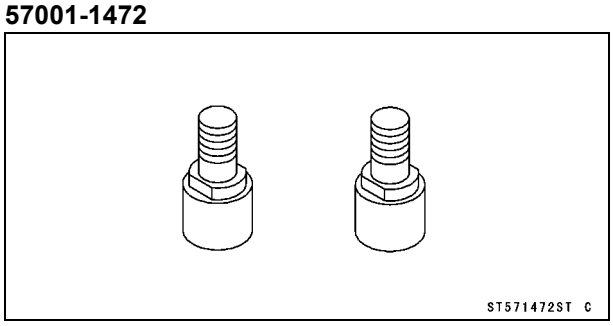

Drive & Driven Pulley Holder:
57001-1473

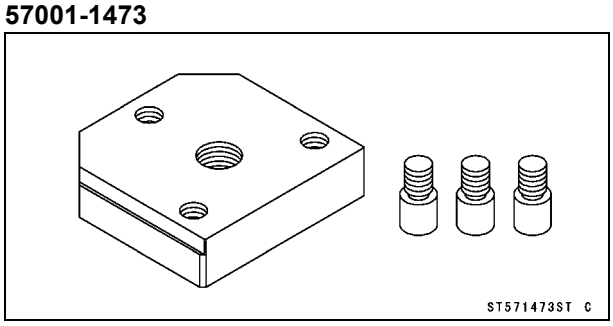

Drive Pulley Wrench:
57001-1474

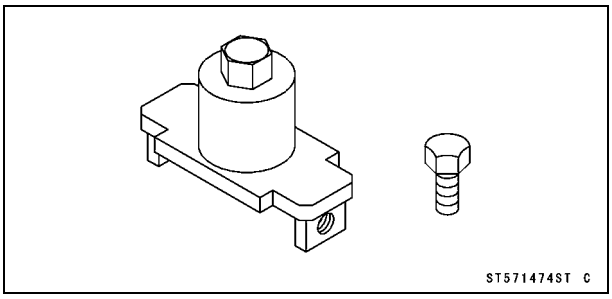

Spring Holder Set:
57001-1483

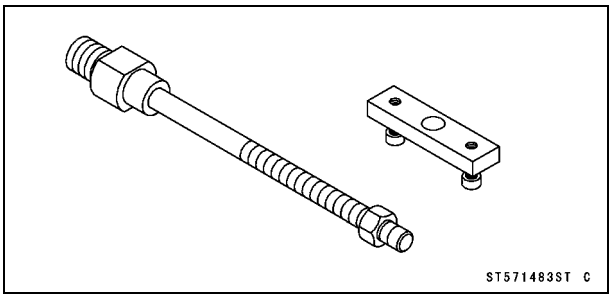

Drive Pulley Measurement Tool:
57001-1498

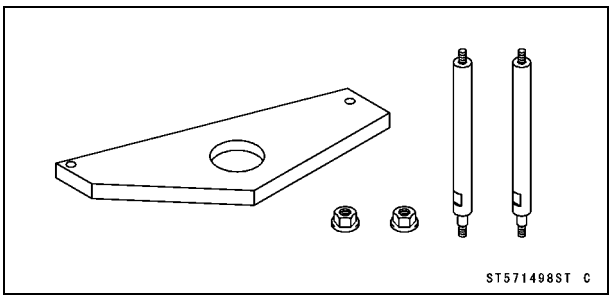

Actuator Lever Measurement Tool:
57001-1499

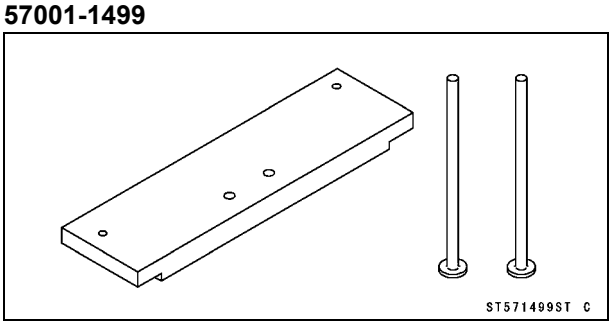

Flywheel & Pulley Holder:
57001-1605

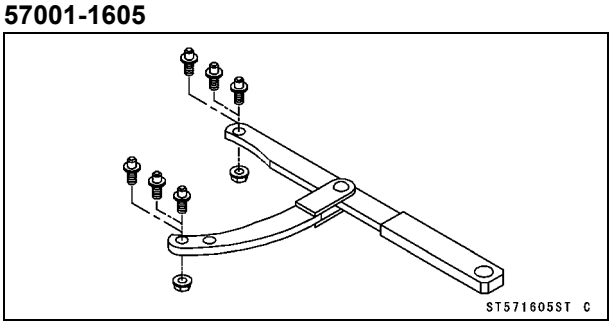

Special Tools

Drive Pulley Holder:
57001-1620

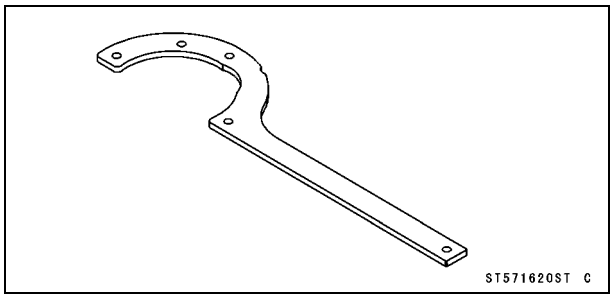

Torque Converter

⚠ WARNING

Excessive imbalance or operating rpm could cause torque converter pulley failure resulting in severe injury or death. The pulleys of the belt drive torque converter are precision balanced components designed to operate within certain rpm limits. Disassembly/assembly and servicing procedures of the pulley assemblies must be followed closely. Modifications to the engine or pulleys that increase rpm may cause failure.

CAUTION

Do not turn the ignition switch OFF position from ON position, while the torque converter cover is removed.
If it is done, the learning control of Kawasaki Engine Brake Control system works and the engine brake actuator works an error operation.

NOTE

○*If the drive belt failure detection system is activated by abnormal belt, the drive belt failure detection switch is damaged. Make sure to replace the torque converter cover (see Torque Converter Cover Removal/Installation).*

Torque Converter Cover Removal

- Confirm that the ignition switch is in OFF position.
- Remove:
  Right Side Cover (see Right Side Cover Removal in the Frame chapter)
  Clamp Screws [A] and Clamps
  Rubber Air Duct [B]

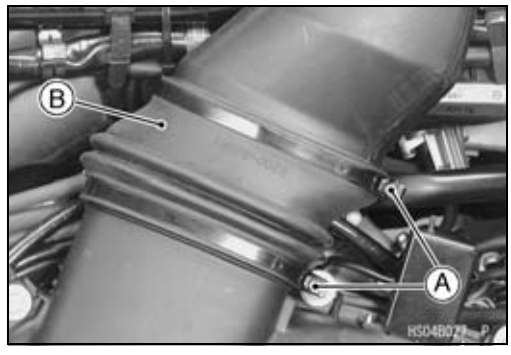

- Remove:
  Actuator Lead Connector and Drive Belt Failure Detection Switch Lead Connector [A]
  Torque Converter Cover Bolts [B]
  Torque Converter Cover [C]

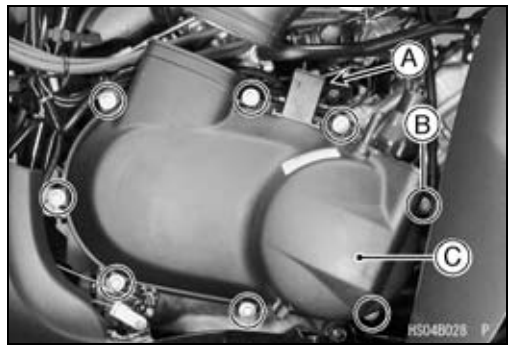

Torque Converter Cover Installation

- Check the actuator lever assembly installation length (see Torque Converter Cover Assembly).
- Fit the trim seal into the converter cover.

○Set the trim seal juncture in the area [A] when insert the trim seal in the cover.
[B] 10 mm (0.39 in.)

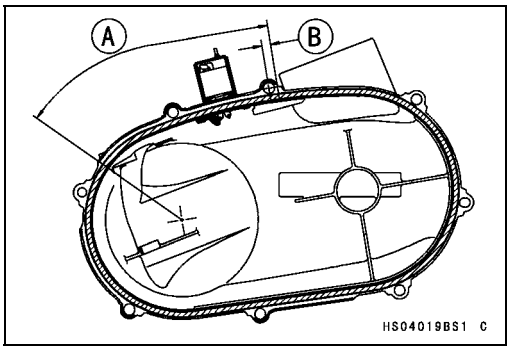

- Check:
  Drive Belt Failure Detection Switch (see Switch Inspection section in Electric System chapter)
- Set [A] the switch lever [B] to the ON mark side [C].
  Converter Cover [D]
  Front [E]

NOTE

○*The failure detection system is activated when the switch is in the ON position. This is the normal running mode. Engine rpm is limited when the switch is in the OFF position.*

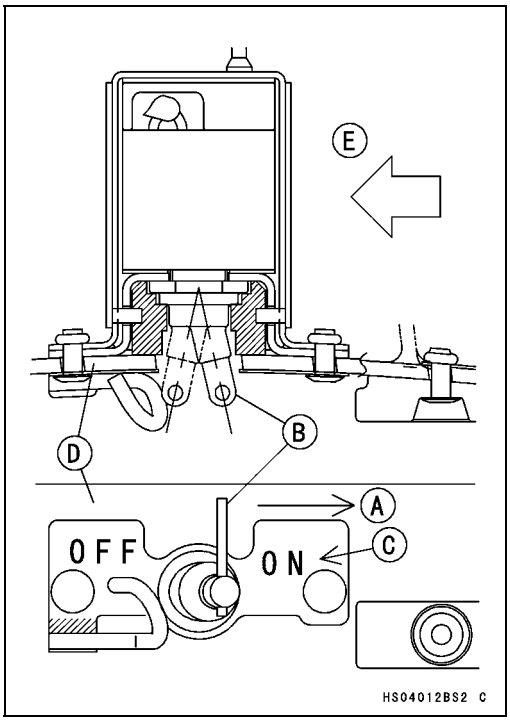

- Tighten (loosely):
  #3 Bolt
  #1 and #2 Bolts
- Press the cover downward and tighten the cover bolts following the tightening sequence as shown.

Torque - Torque Converter Cover Bolts: 8.8 N·m (0.90 kgf·m, 78 in·lb)

[A] Clamp

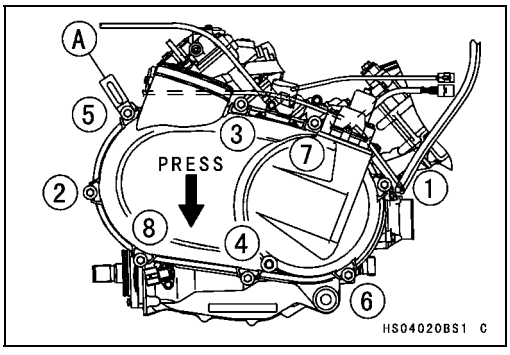

Torque Converter Cover Disassembly

- Remove:
  Torque Converter Cover (see Torque Converter Cover Removal)
  Engine Brake Actuator (see Engine Brake Actuator Removal in the Electrical System chapter)
  Circlip [A]
  Spring [B]
  Actuator Lever Assembly [C]

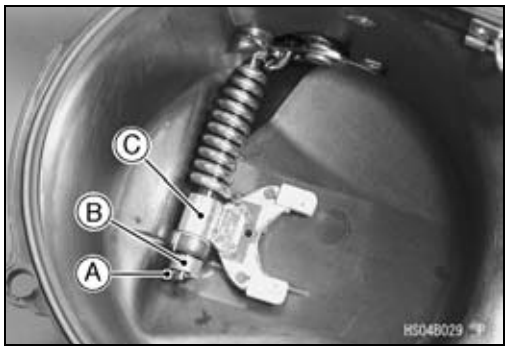

Torque Converter

Actuator Lever (Engine Brake Control Lever) Assembly Inspection

- Refer to the Actuator Lever (Engine Brake Control Lever) Assembly Inspection in the Periodic Maintenance chapter.

Torque Converter Cover Assembly

- Install:
  New Circlip
  Spring
  Actuator Lever Assembly
  Engine Brake Actuator (see Engine Brake Actuator Installation in the Electrical System chapter)

  Torque - Engine Brake Actuator Mounting Bolts: 8.8 N·m (0.90 kgf·m, 78 in·lb)

- Measure the installation length [A] of the actuator lever assembly between the cover end [B] and resin tips [C] on the actuator lever assembly as follows:

  Actuator Lever Assembly Installation Length
  Standard: 149.33 ~ 150.47 mm (5.879 ~ 5.924 in.)

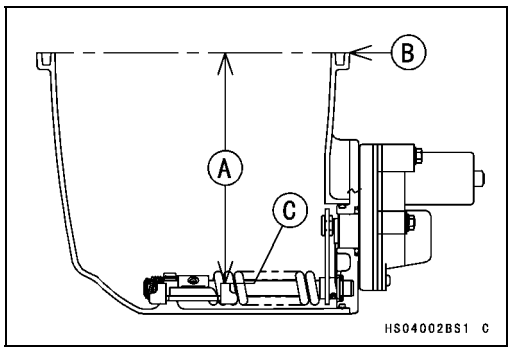

○Remove the trim seal.
○Install the actuator lever measurement tool (plate [A] and rods [B]) on the torque converter cover [C] and tighten the two cover bolts.

Special Tool - Actuator Lever Measurement Tool: 57001-1499

○Set the rod ends on the resin tips [D].
○Measure the recess length [E] between the plate and rods with Vernier calipers [F] or depth gauge.

Measurement Length [E]
Standard: 1.33 ~ 2.47 mm (0.052 ~ 0.097 in.)

★If the measurement is less than 1.33 mm (0.052 in.), use the actuator lever assembly (13236-0046) of yellow paint.
★If the measurement is more than 2.47 mm (0.097 in.), use the actuator lever assembly (13236-0047) of green paint.
★If the length is not within the specified length after the actuator lever assembly is replaced, replace the torque converter cover, and install the actuator lever assembly (13236-0048).

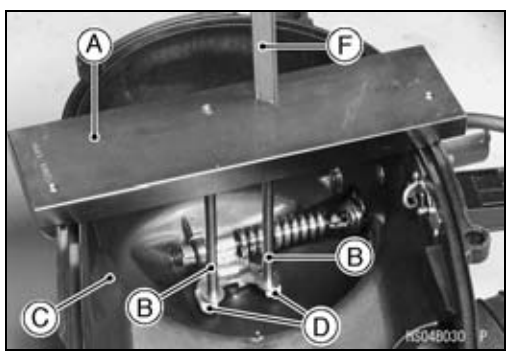

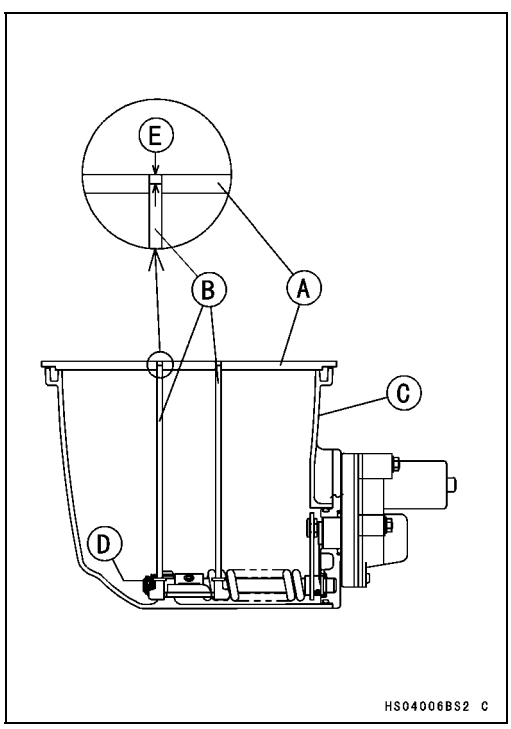

Torque Converter

Actuator Lever Assemblies

Part Number	Paint Color [A]	Length [B]
13236-0046	Yellow	0.4 ±0.1 mm (0.016 ±0.004 in.)
13236-0048	None	1.0 ±0.1 mm (0.039 ±0.004 in.)
13236-0047	Green	1.6 ±0.1 mm (0.063 ±0.004 in.)

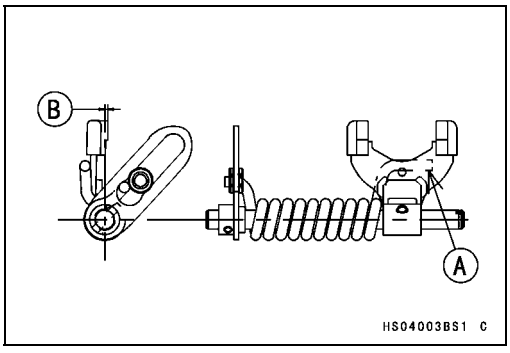

Drive Belt

Drive Belt Removal

- Remove the drive pulley [A] (see Drive Pulley Removal).

NOTE

○*Before removing, observe the direction the belt's printed information [A] (such as manufacturer's name) is facing so that it may be reinstalled on the pulleys to rotate in the same direction as originally installed.*

- Lift the drive belt [B] off the driven pulley [C].

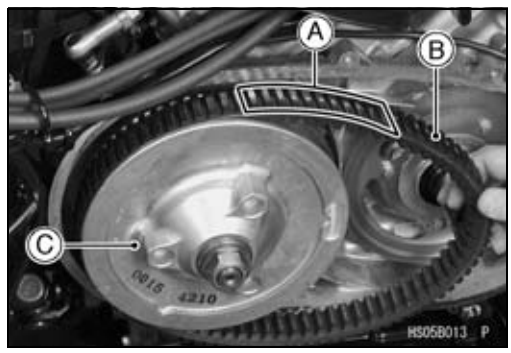

Drive Belt Installation

NOTE

○*Be sure the printed information faces the same direction so the belt rotates in the same direction as originally installed. When installing a new belt, install it so the printed information [A] can be read from beside the vehicle.*

- Installation is basically the reverse of removal.
- Loop the belt [B] over the driven pulley [C].
- Install the drive pulley (see Drive Pulley Installation).

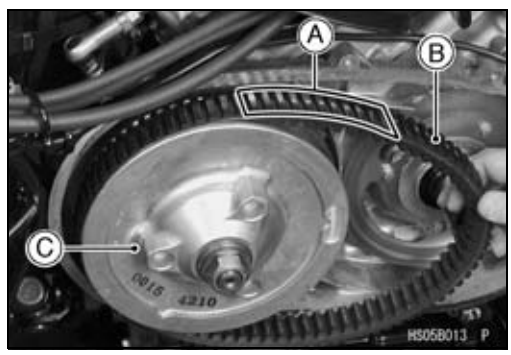

- Put the transmission in neutral, and rotate the driven pulley to allow the belt to return to the top [A] of the sheaves, before measuring belt deflection.

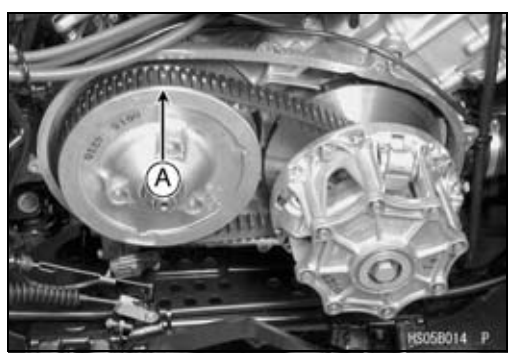

Drive Belt Deflection Inspection

- Refer to the Drive Belt Deflection Inspection in the Periodic Maintenance chapter.

Drive Belt Deflection Adjustment

- Refer to the Drive Belt Deflection Adjustment in the Periodic Maintenance chapter.

Drive Belt Inspection

- Refer to the Drive Belt Inspection in the Periodic Maintenance chapter.

Drive Pulley

Drive Pulley Removal

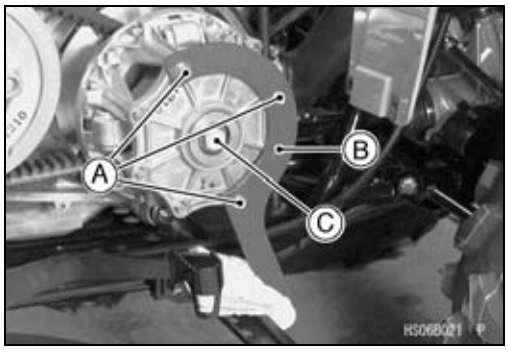

- Remove the torque converter cover (see Torque Converter Cover Removal).
- Remove the three cover bolts [A] and install the drive pulley holder [B].

  Special Tool - Drive Pulley Holder: 57001-1620
- Tighten the three cover bolts:

  Torque - Drive Pulley Cover Bolts: 13 N·m (1.3 kgf·m, 113 in·lb)
- Loosen the drive pulley bolt [C] (left-hand threads), holding the drive pulley with the drive pulley holder.

NOTE

○*The drive pulley bolt has left-hand threads. Turn the wrench clockwise for loosening.*

- Remove the drive pulley bolt, two washers, and the stepped washer, but do not remove the drive pulley holder yet.

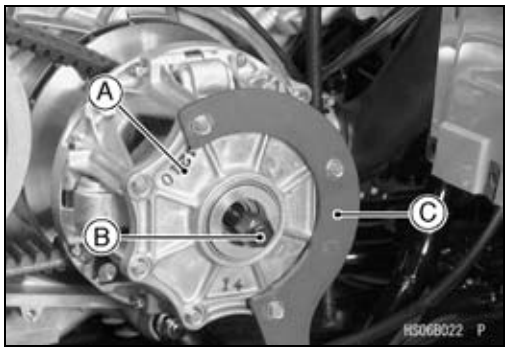

- Remove the drive pulley [A] from the crankshaft by screwing the drive pulley puller bolt [B] **clockwise**, while holding the drive pulley with the drive pulley holder [C].

  Special Tools - Drive Pulley Puller Bolt: 57001-1429
  Drive Pulley Holder: 57001-1620

Drive Pulley Disassembly

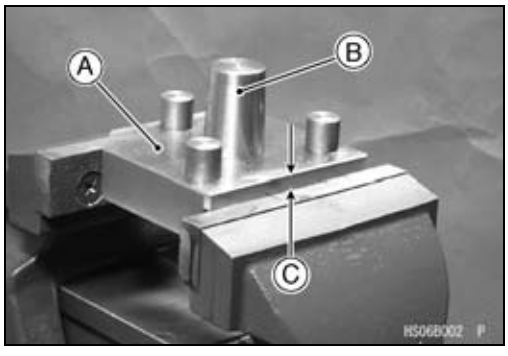

- Hold the drive & driven pulley holder (57001-1473) [A] and the tapered guide of the holder (57001-1412) [B] in a vise so that the upper surface on the holder is 7 mm (0.28 in.) [C] above the vise.

  Special Tools - Drive & Driven Pulley Holder: 57001-1473
  Drive & Driven Pulley Holder: 57001-1412

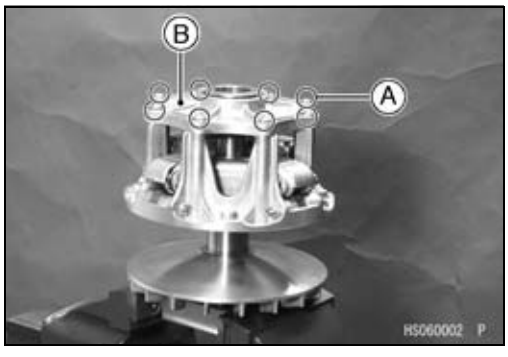

- Set the pulley onto the pulley holder.
- Remove:
  Drive Pulley Cover Bolts [A]
  Drive Pulley Cover [B]

Drive Pulley

- Remove:
  Spring [A]
  Spacer

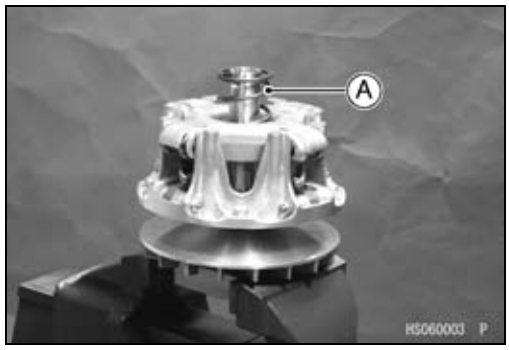

- Put the drive pulley wrench [A] on the spider [B] and tighten the bolt [C].

  Special Tool - Drive Pulley Wrench: 57001-1474
- Turn the wrench clockwise and remove the spider with the movable sheave.

NOTE

○*The spider has left-hand threads. Turn the wrench clockwise for loosening.*

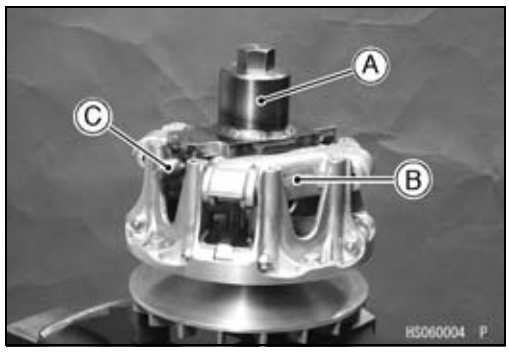

- Remove:
  Spider [A]
  Shoes [B]
  Nuts [C]
  Ramp Weight Pin [D]
  Ramp Weight [E]
  Movable Sheave [F]
  Fixed Sheave [G]

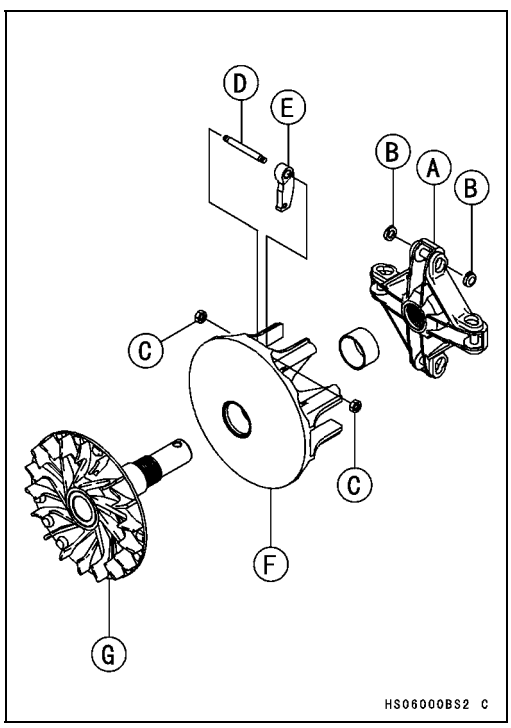

Drive Pulley Inspection

★If the sheave surfaces [A] appear damaged, replace the sheaves.

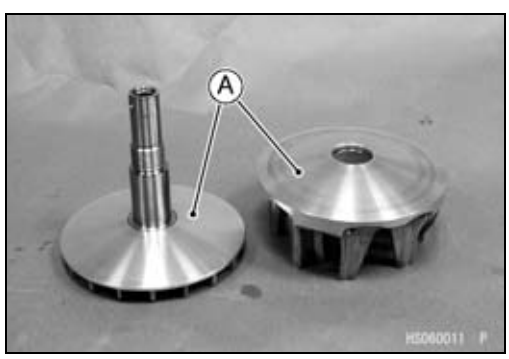

Drive Pulley

★If the cover bushing is damaged or worn, replace the drive pulley cover.

Cover Bushing Inside Diameter [A]
Standard: 27.985 ~ 28.085 mm (1.1018 ~ 1.1057 in.)
Service Limit: 28.12 mm (1.107 in.)

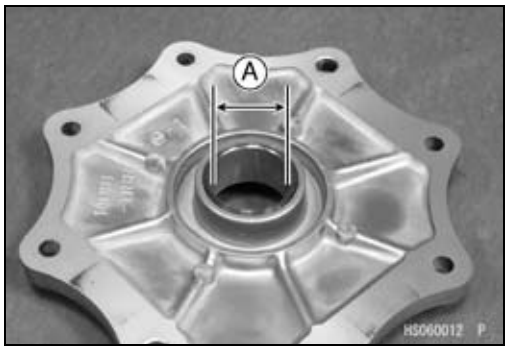

★If the sheave bushing is damaged or worn, replace it.

Sheave Bushing Inside Diameter [A]
Standard: 37.985 ~ 38.085 mm (1.4955 ~ 1.4994 in.)
Service Limit: 38.12 mm (1.501 in.)

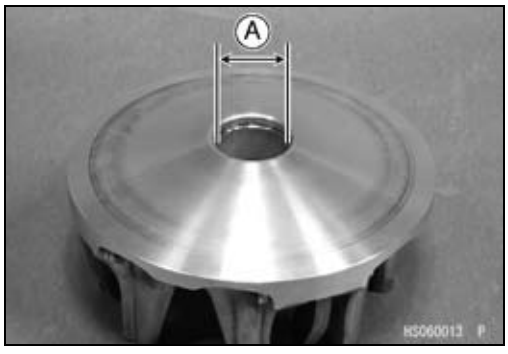

★If the spider shoes [A] are damaged, replace them.
- Check the spider shoe side clearance (see Spider Shoe Side Clearance Inspection).

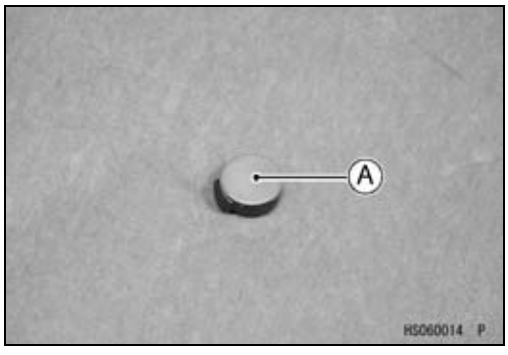

★If the ramp weights [A] in the movable sheave are damaged or worn, replace them.
★If the pins [B] are damaged or worn, replace them.

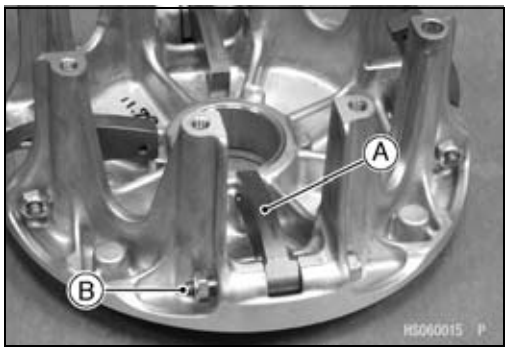

★If the rollers [A] are damaged or worn, replace the spider [B].
★If the washers [C] are damaged or worn, replace the spider.

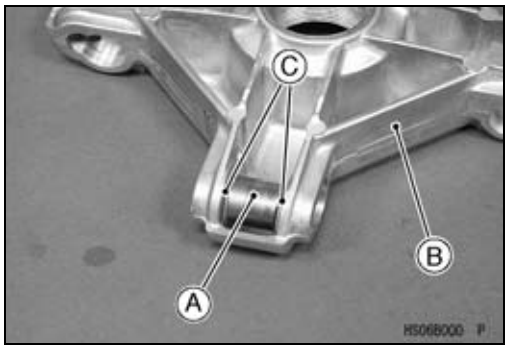

Drive Pulley

★If the spring is worn or damaged, replace the spring.

Spring Free Length [A]
Standard: 60.0 mm (2.36 in.)

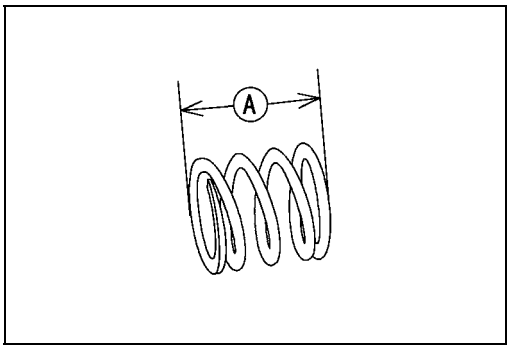

Spider Shoe Side Clearance Inspection/Adjustment

- Remove:
  Drive Pulley (see Drive Pulley Removal)
  Drive Pulley Cover and Spring (see Drive Pulley Disassembly)
- Temporarily install the following parts on the movable sheave.
  Dowel Pins (2)
  Drive Pulley Cover
  Two Bolts (at dowel pins)

○Do not install the spring.

- Turn the movable sheave counterclockwise.
- Measure the resulting clearance [A] between the shoe [B] and the post [C] on the movable sheave at two positions as shown.
  [D] Arrow Mark

Shoe Side Clearance
Standard: up to 0.20 mm (0.008 in.), and there must be kept a clearance which the movable sheave [E] moves smoothly until it touches the fixed sheave [F] with its own weight.

★If the clearance is not the specified range, adjust it using the following shoes.

	Part Number	Thickness
Standard Shoe	49048-1090	7.5 mm (0.295 in.)
Adjustment Shoes	49048-1087	7.2 mm (0.283 in.)
	49048-1088	7.3 mm (0.287 in.)
	49048-1089	7.4 mm (0.291 in.)
	49048-1091	7.6 mm (0.299 in.)
	49048-1092	7.7 mm (0.303 in.)
	49048-1093	7.8 mm (0.307 in.)
	49048-1094	7.9 mm (0.311 in.)
	49048-1095	8.0 mm (0.315 in.)

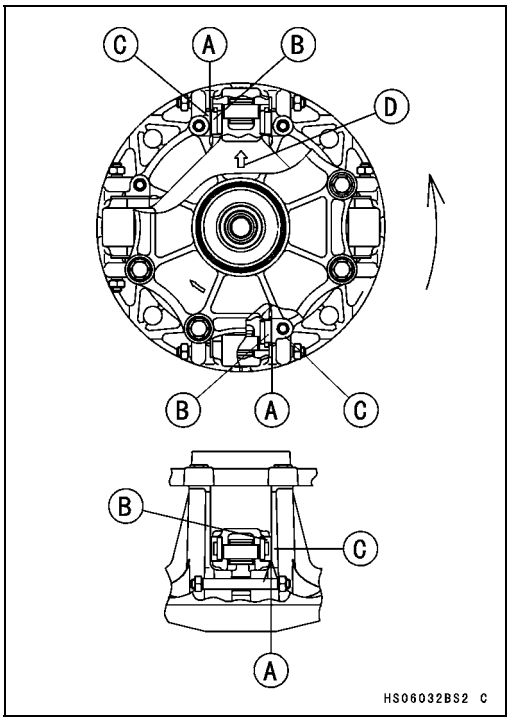

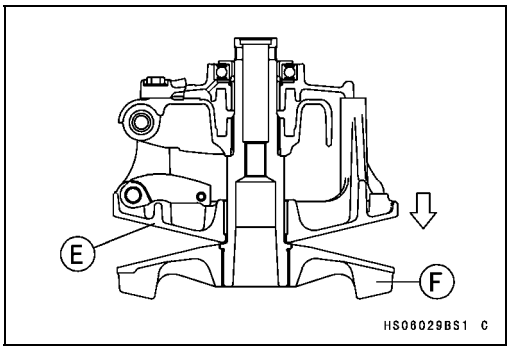

Drive Pulley

★If the clearance is not the specified range after the above shoes are replaced, use the spacer [A] (92026-0038) of the option part.
[B] Shoe
[C] Spider
[D] Post
[E] Clearance

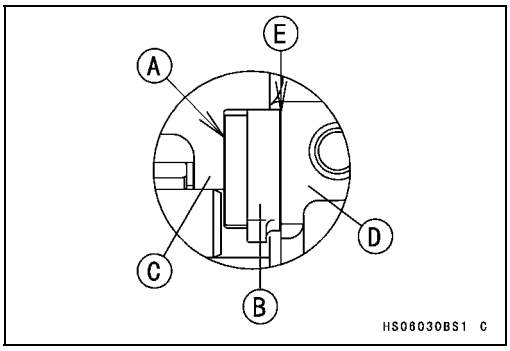

Drive Pulley Assembly

- Install the ramp weight [A] as shown.
- Tighten:

Torque - Ramp Weight Nuts [B]: 6.9 N·m (0.70 kgf·m, 61 in·lb)

- Check that the ramp weights swing smoothly.

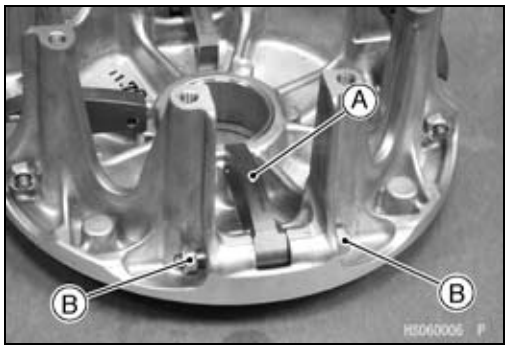

- Hold the fixed sheave [A] with the drive pulley holder [B] in a vise.

Special Tool - Drive & Driven Pulley Holder: 57001-1473

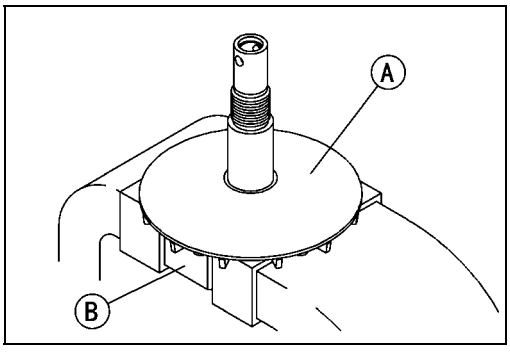

- Clean the threads of the fixed sheave and spider.
- Install:
  Movable Sheave
  Spider [A] and Shoes [B]

○Align the arrow [C] on the spider with the arrow [D] on the movable sheave.
○Insert the shoes so that the rubber side (black, small diameter) faces inward.

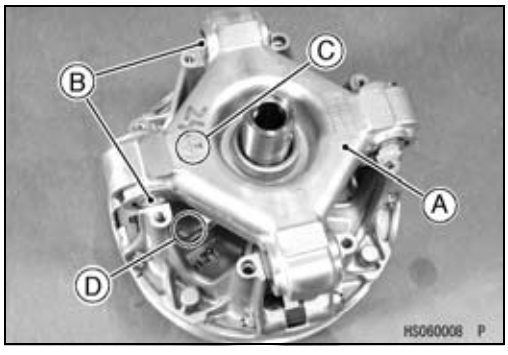

- Put the drive pulley wrench [A] on the spider [B] and tighten the bolt [C].

Special Tool - Drive Pulley Wrench: 57001-1474

- Turn the wrench counterclockwise for tightening.

Torque - Spider (left-hand threads): 275 N·m (28 kgf·m, 203 ft·lb)

- Remove the drive pulley wrench.

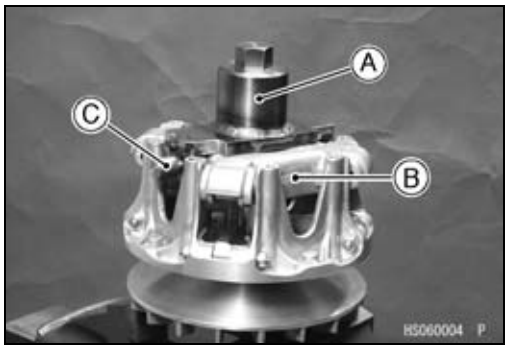

Drive Pulley

- Install the spacer.
- Put the spring [A] in the groove of the spider.
- Align the arrows [B] on the drive pulley cover and spider.
- Install:
  Dowel Pins [C]
  Drive Pulley Cover
- Tighten:

  Torque - Drive Pulley Cover Bolts: 13 N·m (1.3 kgf·m, 113 in·lb)
- Clean the surface of the sheaves with an oil-less cleaning fluid.

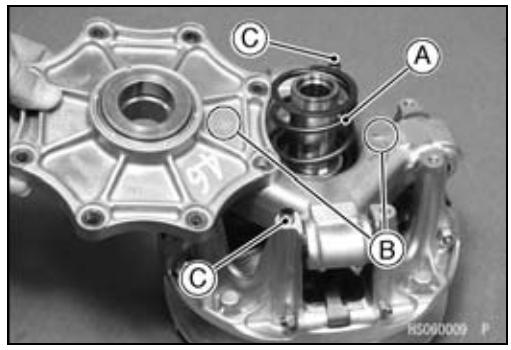

Drive Pulley Installation

- Clean the following portions with an oil-less cleaning fluid such as trichloroethylene or acetone.
  Fixed Sheave Tapered Portion [A]
  Crankshaft Tapered Portion [B]

⚠ WARNING

These cleaning fluids are usually highly flammable and harmful if breathed for prolonged periods. Be sure to heed the fluid manufacturer's warnings.

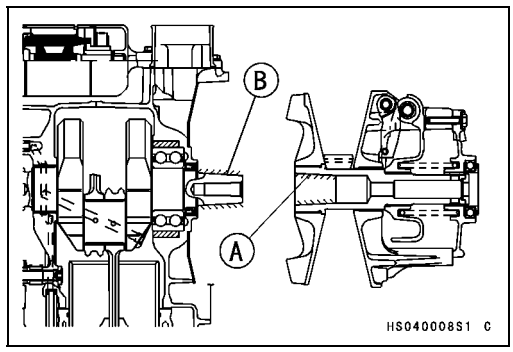

- Install the drive pulley, stepped waster and two washers on the drive pulley bolt as shown.
  Crankcase Side [A]
  Stepped Washer [B]
  Two Washers [C]
  Bolt Head Side [D]

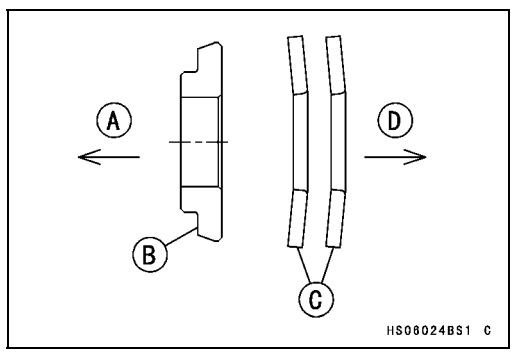

- Remove the three cover bolts [A] and install the drive pulley holder [B].

  Special Tool - Drive Pulley Holder: 57001-1620
- Tighten:

  Torque - Drive Pulley Cover Bolts: 13 N·m (1.3 kgf·m, 113 in·lb)
  Drive Pulley Bolt [C] (new, left-hand threads): 93 N·m (9.5 kgf·m, 69 ft·lb)

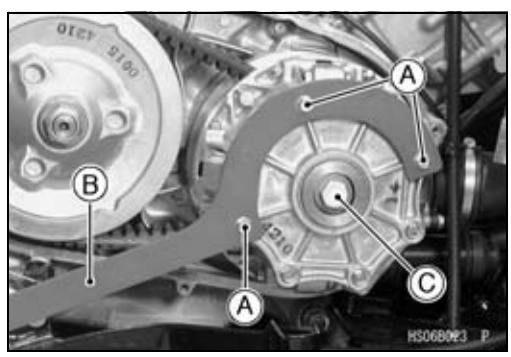

Drive Pulley

- Remove the drive pulley holder and install three drive pulley cover bolts to the specified torque.
- Adjust the installation length [A] of the drive pulley between the surface of the crankcase [B] and the collar [C] on the drive pulley as followings.

Drive Pulley Installation Length [A]
Standard: 149.85 ~ 150.95 mm (5.900 ~ 5.943 in.)

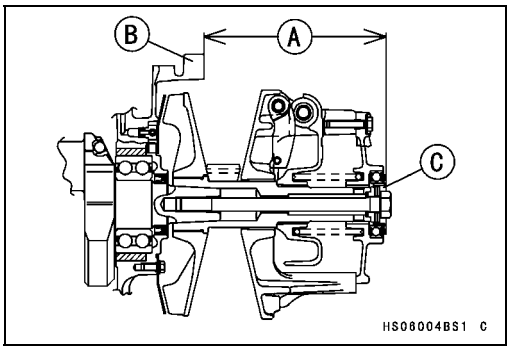

○Install the drive pulley measurement tool (legs [A] and plate [B]) on the crankcase [C].

Special Tool - Drive Pulley Measurement Tool: 57001-1498

○Measure the length [D] between the plate and collar [E] with vernier calipers [F] or a depth gauge.

Measurement Length [D]
Standard: 14.55 ~ 15.65 mm (0.573 ~ 0.616 in.)

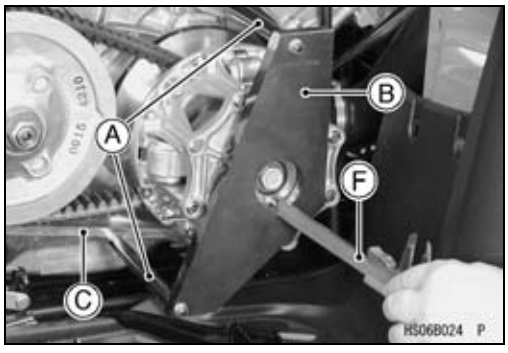

★If the measurement is not within the specified range, adjust it according to following table.

Status Quo		Replacement Part	
Measurement Length	Paint Color of Cover	Replace Part (Part Number)	Paint Color of Cover
less than 14.55 mm (0.573 in.)	Blue	Pulley Cover (14041-1161)	No Paint
	No Paint	Pulley Cover (14041-1159)	Red
	Red	Drive Pulley Assembly (49093-0014)	
more than 15.65 mm (0.616 in.)	Blue	Drive Pulley Assembly (49093-0014)	
	No Paint	Pulley Cover (14041-1160)	Blue
	Red	Pulley Cover (14041-1161)	No Paint

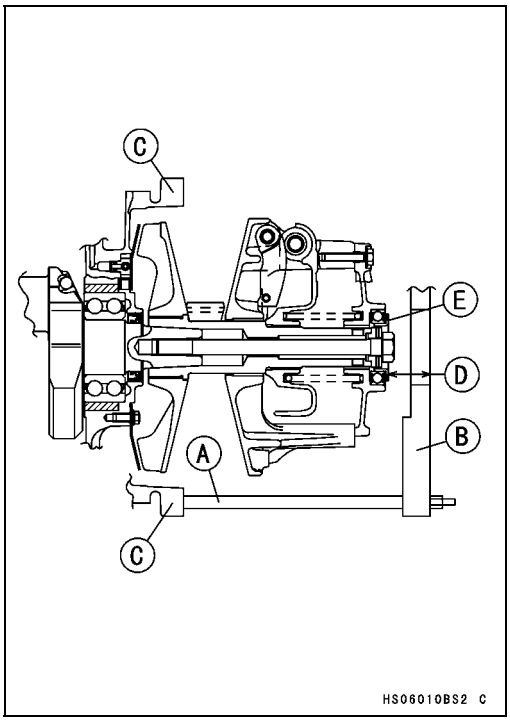

Drive Pulley Covers

Part Number	Paint Color [A]	Length [B]
14041-1159	Red	24.0 mm (0.945 in.)
14041-1160	Blue	25.4 mm (1.000 in.)
14041-1161	No Paint	24.7 mm (0.972 in.)

- Measure the length again, after the drive pulley cover is replaces.

★If the length is not within the specified length, replace the drive pulley assembly.

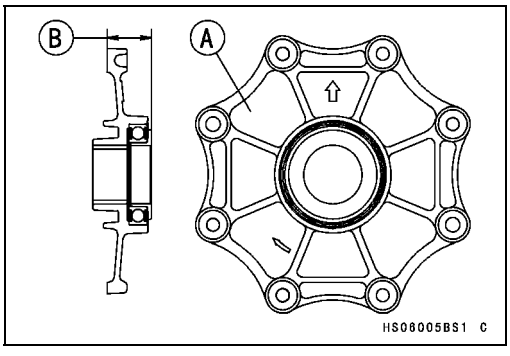

Driven Pulley

Driven Pulley Removal

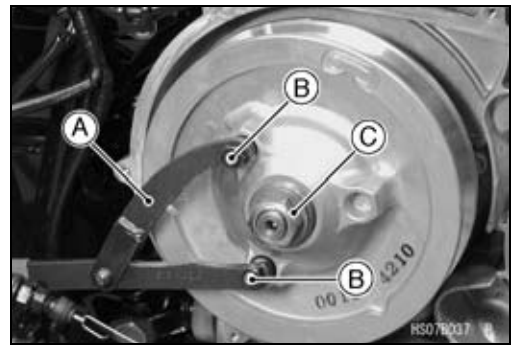

- Remove:
  Torque Converter Cover (see Torque Converter Cover Removal)
  Drive Pulley (see Drive Pulley Removal)
  Drive Belt (see Drive Belt Removal)
- Using the flywheel & pulley holder [A] and attachments [B], remove the driven pulley nut [C] and washers. (Nut has R/H threads.)

  Special Tools - Flywheel & Pulley Holder: 57001-1605
  Pulley Holder Attachment: 57001-1472
- Remove:
  Driven Pulley

Driven Pulley Disassembly

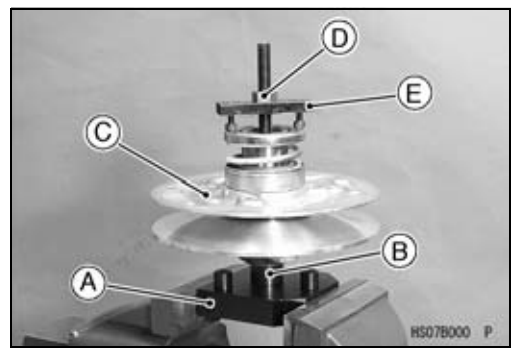

- Hold the drive & driven pulley holder [A] in a vise.

  Special Tool - Drive & Driven Pulley Holder: 57001-1473
- Screw the guide bar [B] into the holder.

  Special Tool - Spring Holder Set: 57001-1483
- Put the driven pulley [C] on the guide bar.
- Tighten the nut [D], and compress the spring with the spring holder [E].

  Special Tool - Spring Holder Set: 57001-1483

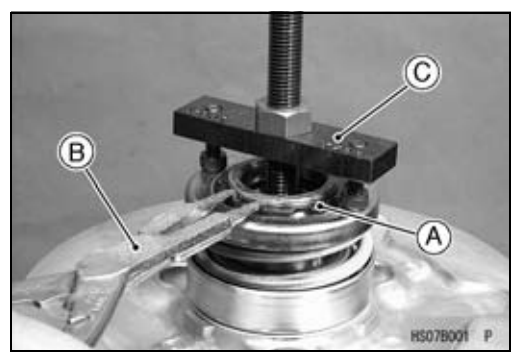

- Remove the circlip [A] with circlip pliers [B].

  Special Tool - Circlip Pliers: 57001-144
- Remove the nut and spring holder [C].

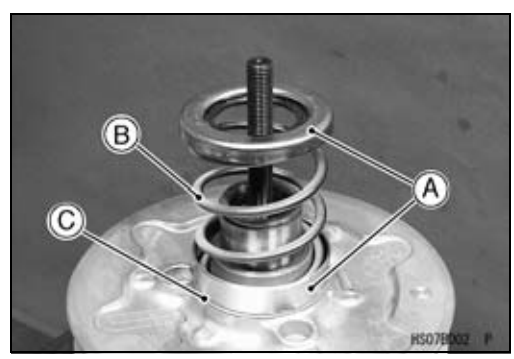

- Remove:
  Spring Seats [A]
  Spring [B]
  Thrust Plate [C]

Driven Pulley

- Confirm the paint mark “0” [A] on the movable sheave [B] in alignment with the point [C] on the fixed sheave [D] for phase fit of the sheaves.

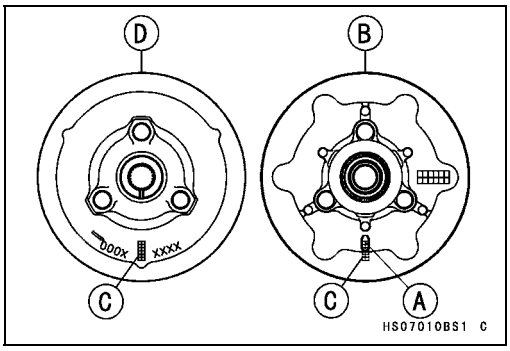

- Wipe off the molybdenum disulfide grease.
- Remove the four pins [A] with a thin standard tip screwdriver [B].
- Remove the movable sheave from the fixed sheave.

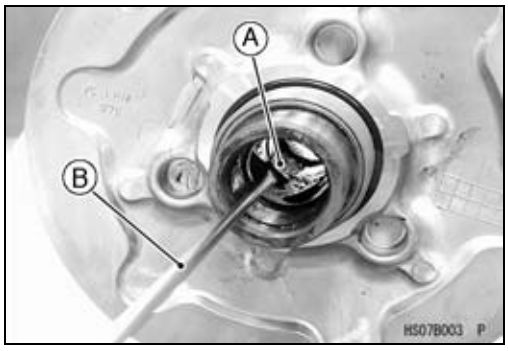

- Remove:
  Spacer(s) [A] (for Drive Belt Deflection Adjustment)

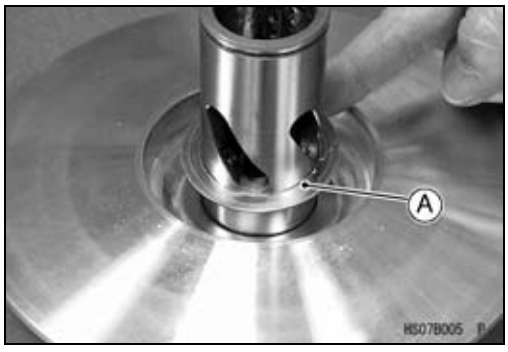

Driven Pulley Inspection

★If the sheave surfaces [A] appear damaged, replace the sheaves.

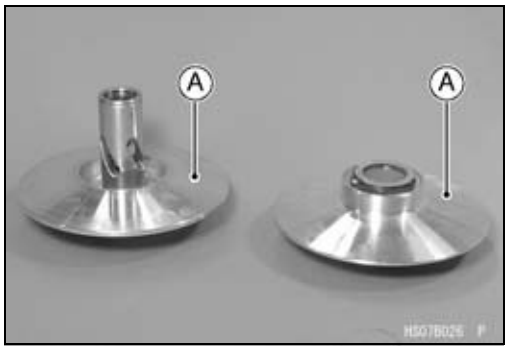

- Replace the sheave with uneven wear on the belt contacting surfaces.
  [A] Sheave Surface
  [B] Straight Edge

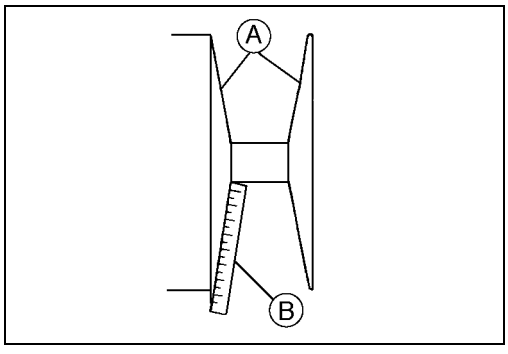

Driven Pulley

★If the sheave bushings [A] are damaged or worn, replace the movable sheave.

Sheave Bushing Inside Diameter
Standard: 40.000 ~ 40.039 mm (1.5748 ~ 1.5763 in.)
Service Limit: 40.07 mm (1.578 in.)

- Inspect seals for damage.

★If seals are damaged, replace the movable sheave.

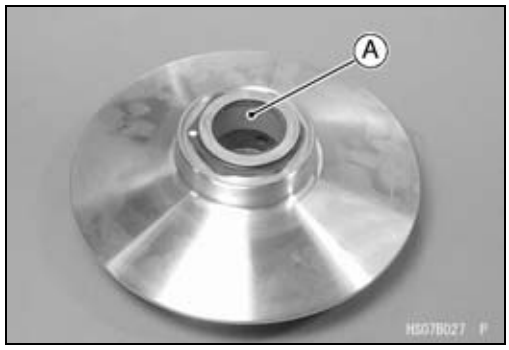

★If the splines [A] are damaged or worn, replace the fixed sheave.

★If the spring is damaged or worn, replace the spring.

Spring Free Length [A]
Standard: 75.1 mm (2.96 in.)

★If the spring coils are distorted, replace the spring.

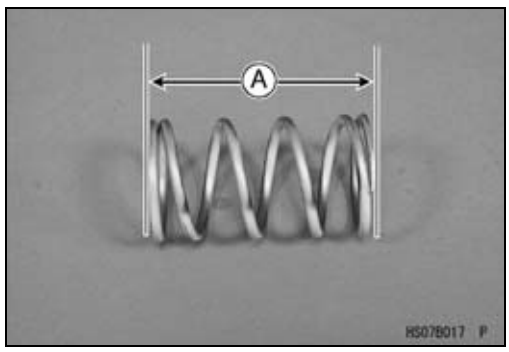

Driven Pulley Assembly

- Clean off any grease or dirt on the movable and fixed sheaves, and dry them with a clean cloth.
- Install:
  Spacers [A] (see Converter Drive Belt Deflection Adjustment in the Periodic Maintenance chapter)

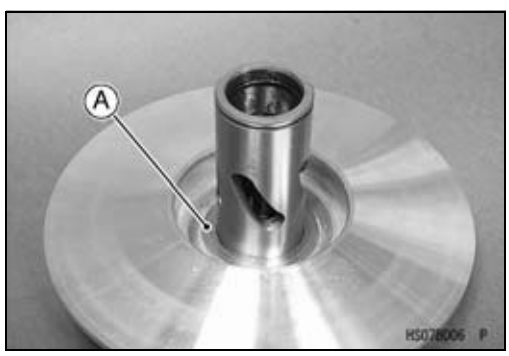

- Apply grease to the oil seal lips [A].
- Press the oil seals [B] in the movable sheave assembly so that the oil seal surface is flush [C] with the sleeve end.
- Apply [D] grease (WR500-No.2 (KYODO YUSHI), POWER LITE WR #2 (KYODO YUSHI), or SERAN-HV (TOTAL FINA)) to the inner surfaces of the busings.

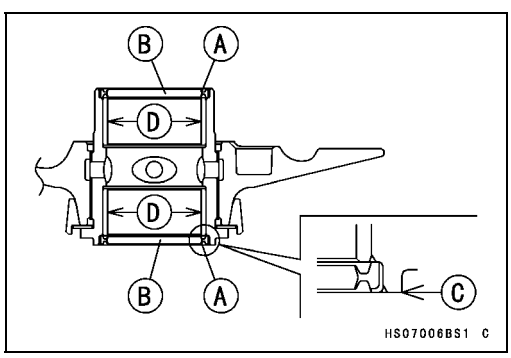

Driven Pulley

- Align the paint mark “0” [A] on the movable sheave [B] with the point [C] on the fixed sheave [D] for phase fit of the sheaves.

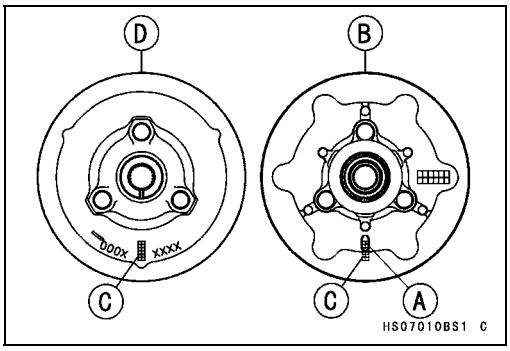

○In that case the opening [A] and hole [B] will be matched easily.

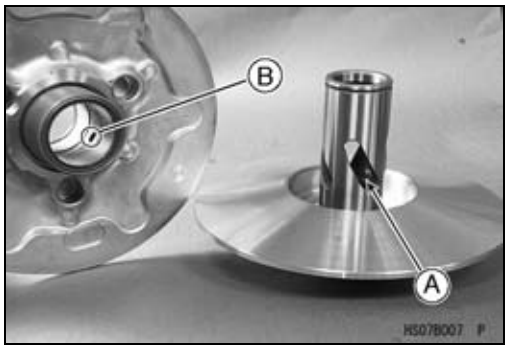

- Apply grease (WR500-No.2 (KYODO YUSHI), POWER LITE WR #2 (KYODO YUSHI), or SERAN-HV (TOTAL FINA)) to the seating surface [A] of the pins, and insert them into the holes in the movable sheave.

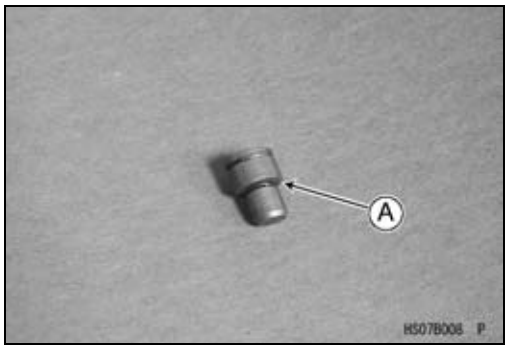

- Draw the movable sheave onto the fixed sheave, and apply grease of 1 g (0.035 oz) to all openings [A].

Grease - WR500-No.2 (KYODO YUSHI) or
POWER LITE WR #2 (KYODO YUSHI) or
SERAN-HV (TOTAL FINA)

NOTE

○*Do not heap up the grease out of the openings.*

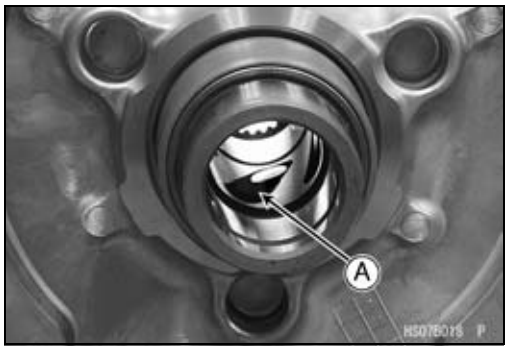

- Check that the O-rings [A] are in good condition.
★If any of the O-rings are damaged, replace them.
- Apply grease to the O-rings.

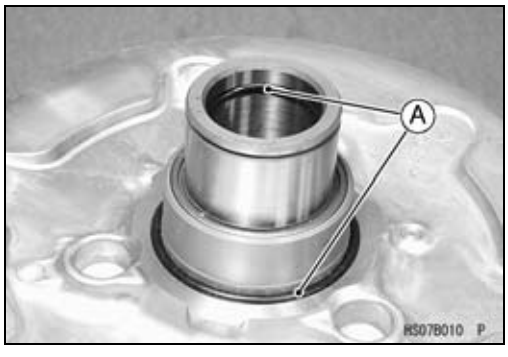

Driven Pulley

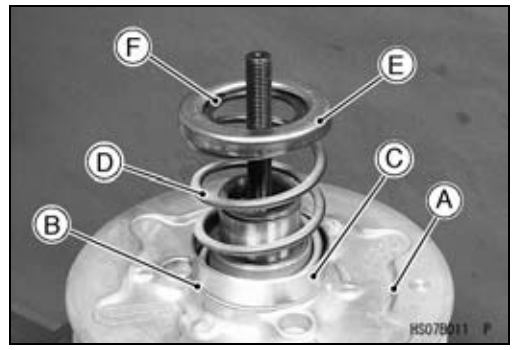

- Hold the drive & driven pulley holder in a vise.

  Special Tool - Drive & Driven Pulley Holder: 57001-1473
- Screw the guide bar into the holder.

  Special Tool - Spring Holder Set: 57001-1483
- Put the driven pulley [A] onto the guide bar.
- Put the thrust plate [B] so that the alloy side (gray) faces the movable sheave.
- Install:
  Spring Seat [C]: 18.5 mm (0.728 in.)
  Spring [D]
  Spring Seat [E]: 9.3 mm (0.366 in.)
  Circlip [F]

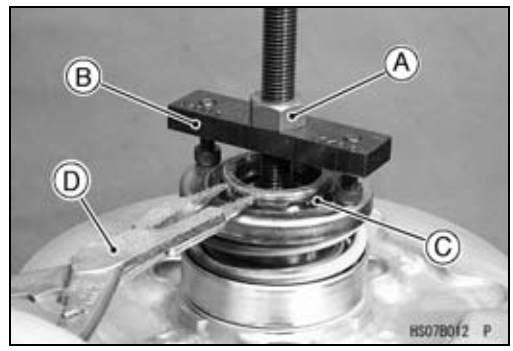

- Tighten the nut [A], and compress the spring with the spring holder [B].

  Special Tool - Spring Holder Set: 57001-1483
- Install a new circlip [C] with circlip pliers [D].

  Special Tool - Circlip Pliers: 57001-144
- Remove the driven pulley from the spring holder set.
- Clean the surface of the sheaves with an oil-less cleaning fluid.

Driven Pulley Installation

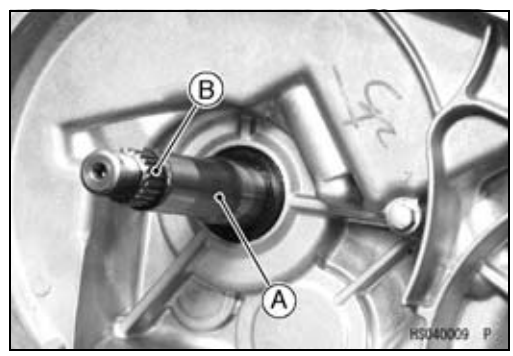

- Clean the transmission driven shaft [A].
- Install:
  Driven Pulley

NOTE

○*When engaging the spline on the driven pulley with the spline [B] on the shaft, do not damage the pulley's spline. If any damage occurs, remove it with a file.*

- Clean the threads of the driven shaft and driven pulley ends to open the air vent passage. Wipe off any extra grease.

○Wipe off any protruding grease [A].

Driven Pulley

- Install two washers [A] on the shaft as shown.
  Crankcase Side [B]
  Bolt Head Side [C]

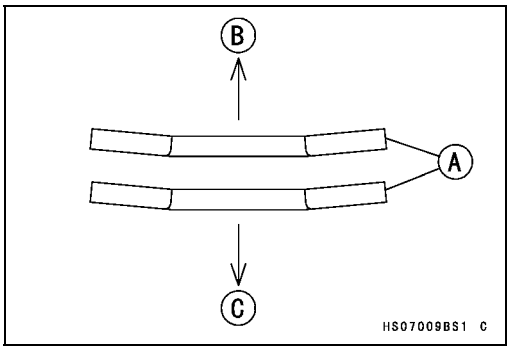

- Using the flywheel & pulley holder [A] and attachments [B], tighten the driven pulley nut [C].

  Special Tools - Flywheel & Pulley Holder: 57001-1605
  Pulley Holder Attachment: 57001-1472

  Torque - Driven Pulley Nut: 93 N·m (9.5 kgf·m, 69 ft·lb)

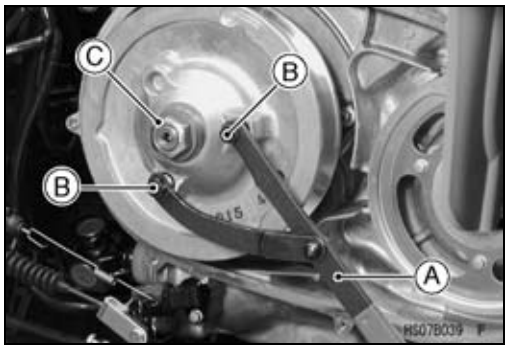

High Altitude Setting Information

Specifications

Altitude m (ft)	Drive Pulley		Carburetor
	Ramp Weights	Spring Spacer (qty)	Main Jet
0 ~ 1 200 (0 ~ 3 900)	P/No. 39152-1081 (STD, C)	P/No. 92026-1603 (1) t = 1 mm (0.04 in.)	Front: #152 (P/No. 92063-1331) (STD) Rear: #158 (P/No. 92063-1344) (STD)
1 200 ~ 2 500 (3 900 ~ 8 200)	P/No. 39152-1081 (STD, C)	P/No. 92026-1603 (1) t = 1 mm (0.04 in.)	Front: #145 (P/No. 92063-1017) Rear: #152 (P/No. 92063-1331)
2 500 ~ 3 500 (8 200 ~ 11 500)	P/No. 39152-1088 (C1)	P/No. 92026-1603 (2) t = 1 mm (0.04 in.)	Front: #142 (P/No. 92063-1016) Rear: #148 (P/No. 92063-1324)
3 500 ~ 4 500 (11 500 ~ 14 800)	P/No. 39152-1088 (C1)	P/No. 92026-1603 (2) t = 1 mm (0.04 in.)	Front: #135 (P/No. 92063-1014) Rear: #140 (P/No. 92063-1013)

C, C1: Identification Marks

qty: quantity

- Refer to the Drive Pulley section, and Carburetor section in the Fuel System chapter for the parts replacement.

Recoil Starter

Table of Contents

Exploded View

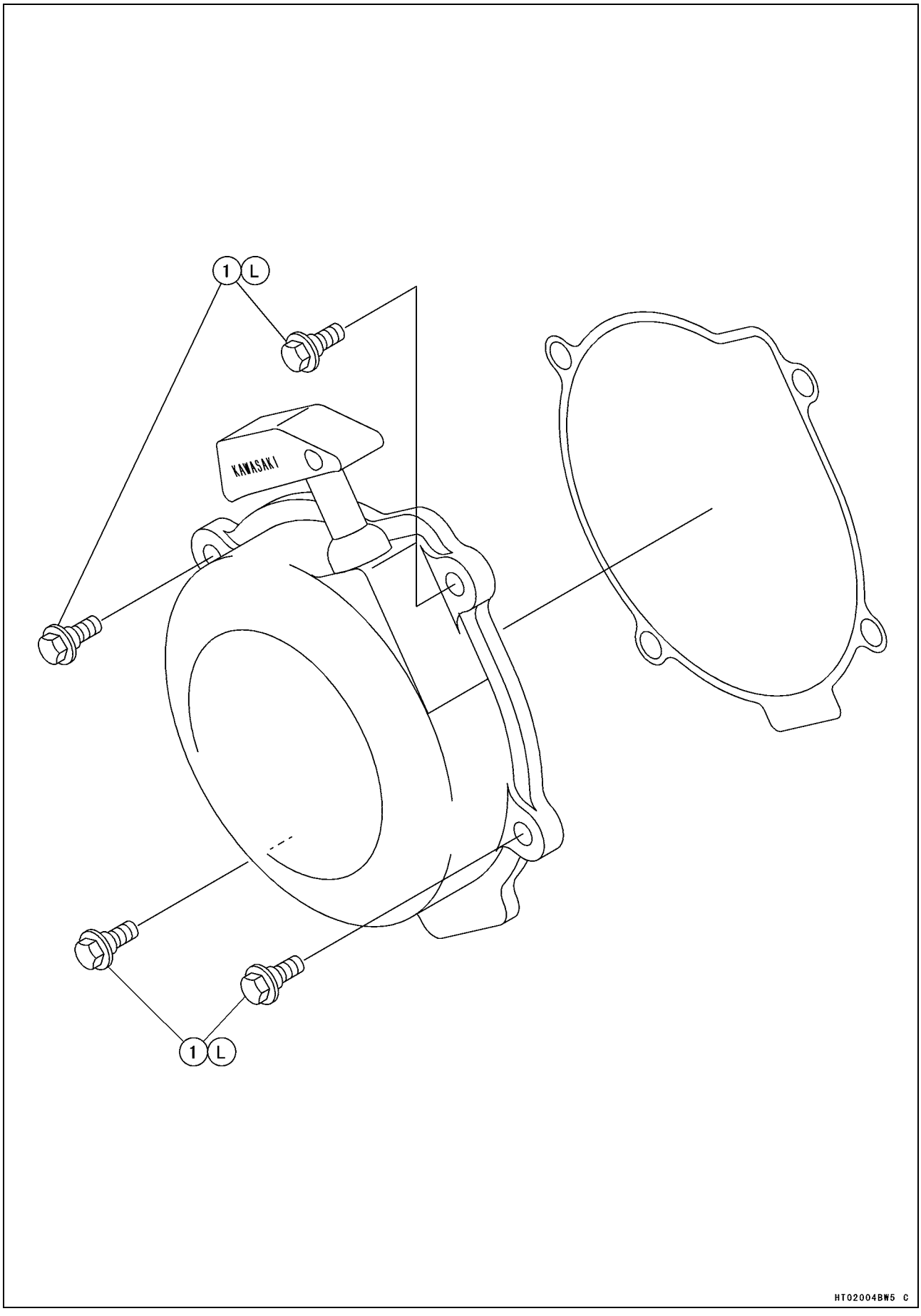

Exploded View

No.	Fastener	Torque			Remarks
		N·m	kgf·m	ft·lb	
1	Recoil Starter Mounting Bolts	5.9	0.60	52 in·lb	L

L: Apply a non-permanent locking agent.

Recoil Starter

Recoil Starter Removal

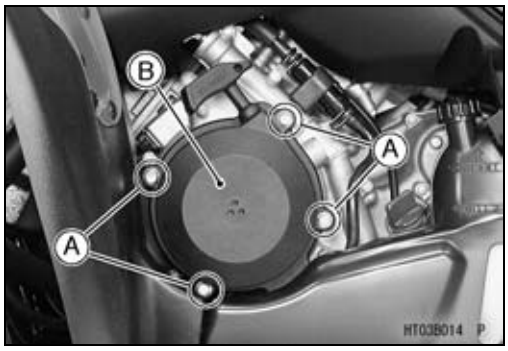

- Remove:
  Recoil Starter Mounting Bolts [A]
  Recoil Starter [B]

Recoil Starter Installation

- Apply a non-permanent locking agent:
  Recoil Starter Mounting Bolts
- Tighten:

Torque - Recoil Starter Mounting Bolts: 5.9 N·m (0.60 kgf·m, 52 in·lb)

Recoil Starter Inspection

- Check the starter rope for excessive wear or fraying.

Engine Lubrication System

Table of Contents

Exploded View

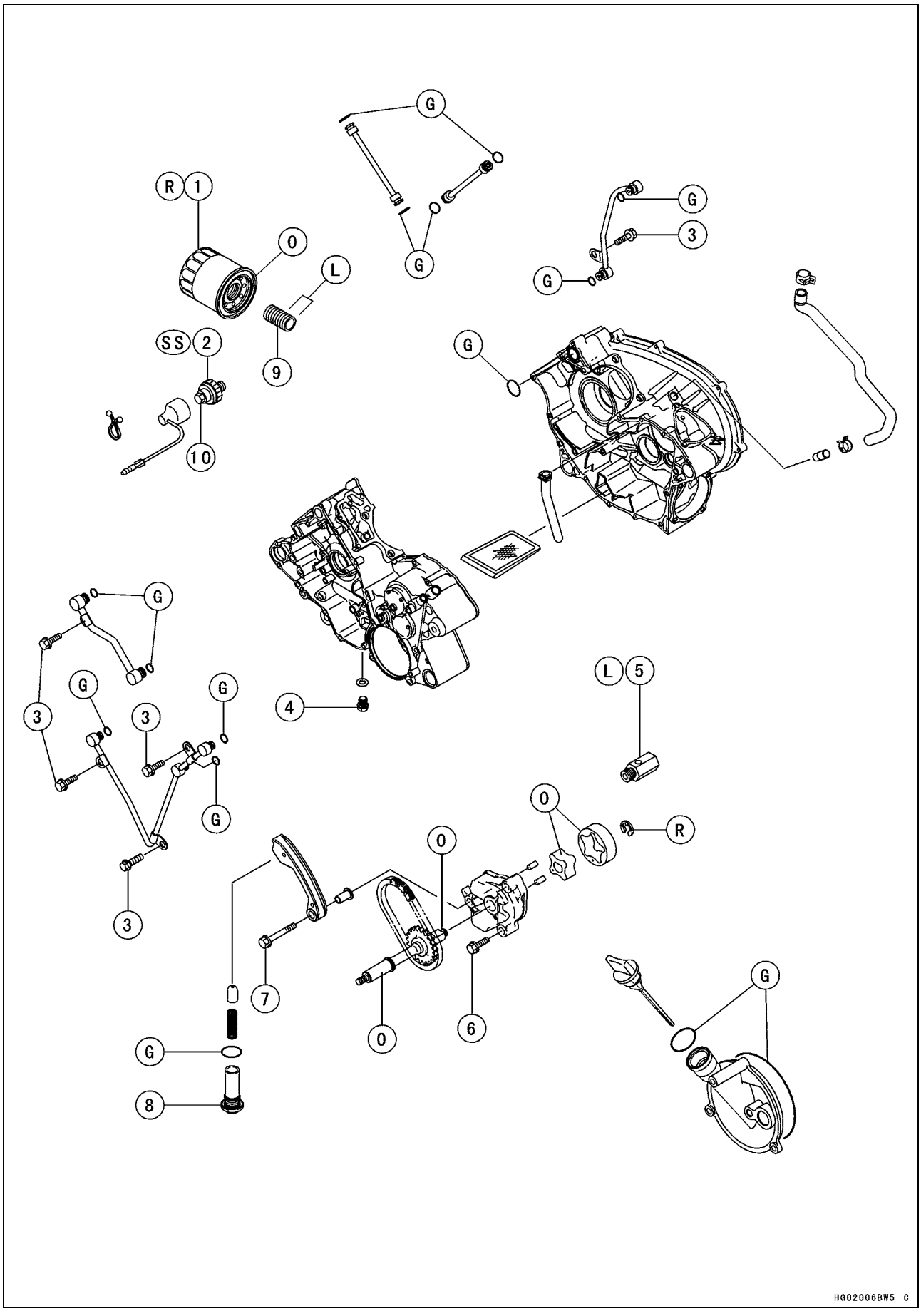

Exploded View

No.	Fastener	Torque			Remarks
		N·m	kgf·m	ft·lb	
1	Oil Filter	18	1.8	13	R
2	Oil Pressure Switch	15	1.5	11	SS
3	Oil Pipe Bolts	8.8	0.90	78 in·lb	
4	Engine Oil Drain Plug	20	2.0	14	
5	Oil Pressure Relief Valve	15	1.5	11	L
6	Oil Pump Bolts	8.8	0.90	78 in·lb	
7	Chain Guide Bolts	8.8	0.90	78 in·lb	
8	Oil Pump Drive Chain Tensioner Bolt	25	2.5	18	
9	Oil Filter Mounting Bolt	25	2.5	18	L (15 mm)
10	Oil Pressure Switch Terminal Bolt	1.5	0.15	13 in·lb	

G: Apply grease.
L: Apply a non-permanent locking agent.
O: Apply engine oil.
R: Replacement Parts
SS: Apply silicone sealant (Kawasaki Bond: 56019-120).

Specifications

Item	Standard
Engine Oil	
Type	API SF or SG
	API SH, SJ or SL with JASO MA
Viscosity	SAE 10W-40
Capacity	2.1 L (2.2 US qt) (when filter is not removed)
	2.2 L (2.3 US qt) (when filter is removed)
	2.6 L (2.7 US qt) (when engine is completely dry)
Oil Pressure Measurement	
Oil Pressure @4 000 r/min (rpm), Oil Temperature 120°C (248°F)	430 kPa (4.4 kgf/cm², 62.6 psi)

Special Tools & Sealant

Oil Pressure Gauge, 10 kgf/cm²:
57001-164

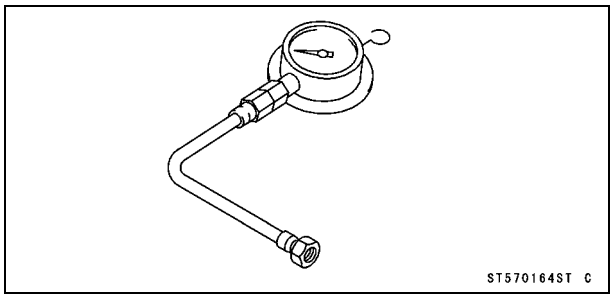

Oil Pressure Gauge Adapter, PT 1/8:
57001-1033

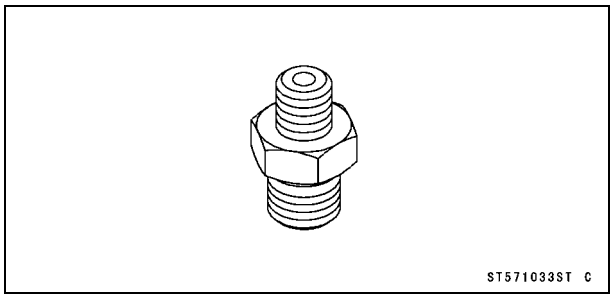

Kawasaki Bond (Silicone Sealant):
56019-120

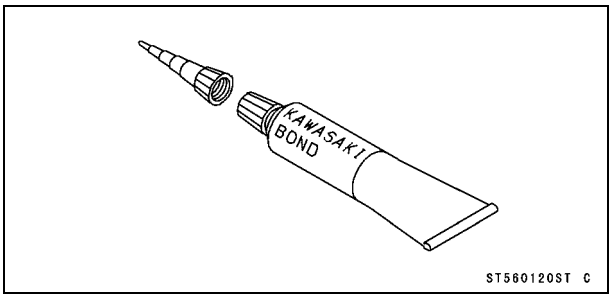

Engine Oil Flow Chart

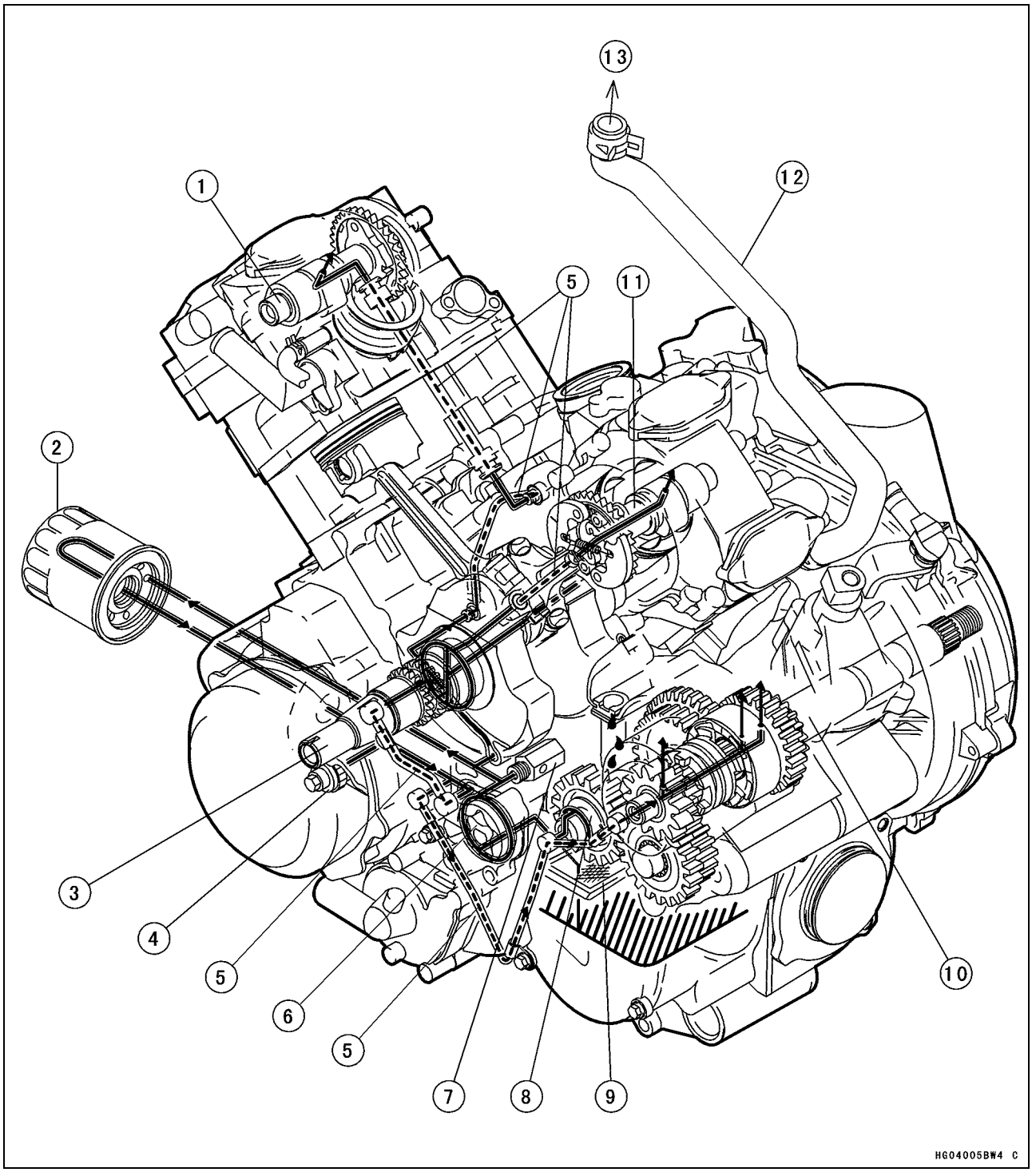

1. Front Camshaft
2. Oil Filter
3. Crankshaft
4. Oil Pressure Switch
5. Oil Pipes
6. Oil Pump
7. Relief Valve
8. Transmission Idle Shaft
9. Oil Screen
10. Transmission Driven Shaft
11. Rear Camshaft
12. Breather Hose
13. To Air Cleaner

Engine Oil and Oil Filter

⚠ WARNING

Vehicle operation with insufficient, deteriorated, or contaminated engine oil will cause accelerated wear and may result in engine or transmission seizure, accident, and injury.

Oil Level Inspection

- Park the vehicle so that it is level, both side-to-side and front-to-rear.
- If the oil has just been changed, start the engine, and run it for several minutes to fill the oil filter.

CAUTION

Allow the engine to idle for several minutes so that oil may reach all parts of the engine. Racing a "dry" engine may cause severe damage.

- Stop the engine and wait several minutes for all the oil to drain back to the sump.

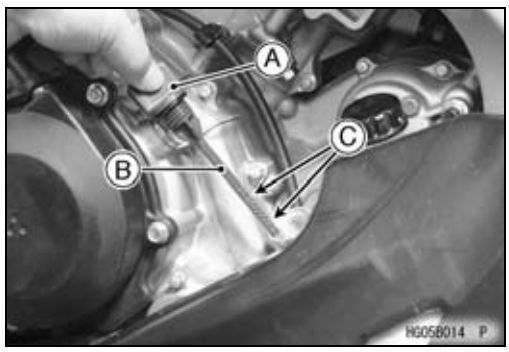

- Unscrew the oil filler cap [A], wipe its dipstick [B] dry, and tighten it into the filler opening.
- Unscrew the oil filler cap and check the oil level. The oil level should be between the upper (H) and lower (L) level lines [C].

★If the level is too high, suck the excess oil out the filler hole with a syringe or other suitable device.

★If the level is too low, add oil through the filler hole. Use the same type and make of oil that is already in the engine.

Engine Oil Change

- Refer to the Engine Oil Change in the Periodic Maintenance chapter.

Oil Filter Change

- Refer to the Oil Filter Change in the Periodic Maintenance chapter.

Oil Screen Removal

- Split the crankcase (see Crankcase Disassembly in the Crankshaft/Transmission chapter).
- Pull the oil screen [A] out of the crankcase.

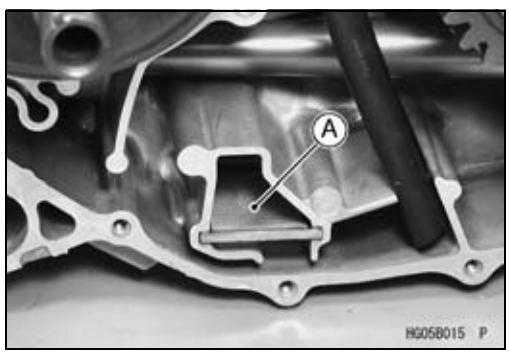

Engine Oil and Oil Filter

Oil Screen Cleaning

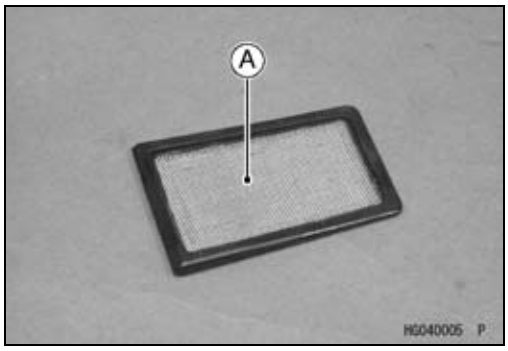

- Clean the oil screen [A] thoroughly whenever it is removed for any reason.
- Clean the oil screen with a high-flash point solvent and remove any particles stuck to it.

⚠ WARNING

Clean the screen in a well-ventilated area, and take care that there is no spark or flame anywhere near the working area. Because of the danger of highly flammable liquids, do not use gasoline or low-flash point solvents.

NOTE

○*While cleaning the screen, check for any metal particles that might indicate internal engine damage.*

- Check the screen carefully for any damage, holes, broken wires, or gasket pulling off.

★If the screen is damaged, replace it.

Oil Pressure Measurement

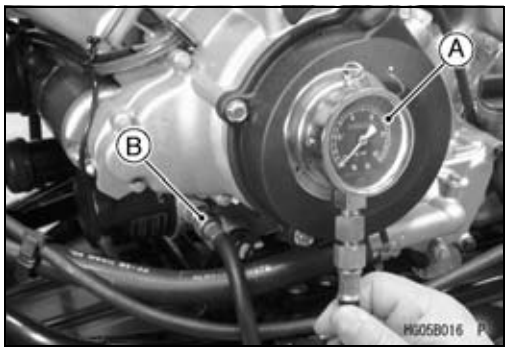

NOTE

○*Measure the oil pressure after the engine is warmed up.*

- Remove the oil pressure switch, and attach the oil pressure gauge [A] and adapter [B].

Special Tools - Oil Pressure Gauge, 10 kgf/cm²: 57001-164
Oil Pressure Gauge Adapter, PT 1/8: 57001-1033

Oil Pressure
Standard: 430 kPa (4.4 kgf/cm², 62.6 psi) @4 000 r/min (rpm), 120°C (248°F) of oil temp.

★If the oil pressure is much lower than the standard, inspect the relief valve, oil pump, and/or crankshaft bearing insert wear.

★If the oil pressure is much higher than the standard, inspect the oil filter, oil screen, and other areas of the lubrication system for clogging.

- Stop the engine.
- Remove the oil pressure gauge and adapter.

⚠ WARNING

Take care against burns from hot engine oil that will drain through the oil passage when the gauge adapter is removed.

- Apply silicone sealant to the oil pressure switch, and tighten it.

Sealant - Kawasaki Bond (Silicone Sealant): 56019-120

Torque - Oil Pressure Switch: 15 N·m (1.5 kgf·m, 11 ft·lb)

Oil Pressure Relief Valve

Oil Pressure Relief Valve Removal

- Split the crankcase (see Crankcase Disassembly in the Crankshaft/Transmission chapter).
- Remove the oil pressure relief valve [A].

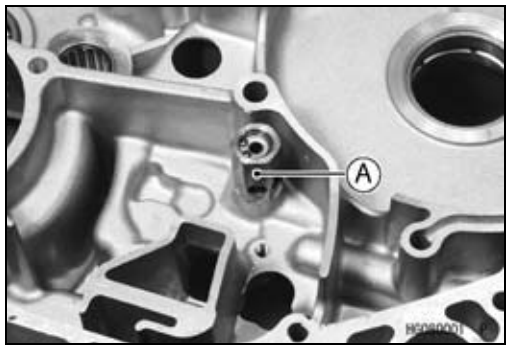

Oil Pressure Relief Valve Installation

- See crankcase assembly (see Crankcase Assembly in the Crankshaft/Transmission chapter).
- Apply a non-permanent locking agent to the threads of oil pressure relief valve, and tighten it.

Torque - Oil Pressure Relief Valve: 15 N·m (1.5 kgf·m, 11 ft·lb)

Oil Pressure Relief Valve Inspection

- Remove the relief valve.
- Using a wooden stick, push the inner valve to make sure that the valve [A] moves smoothly and that it returns to its original position by the force of the spring [B].

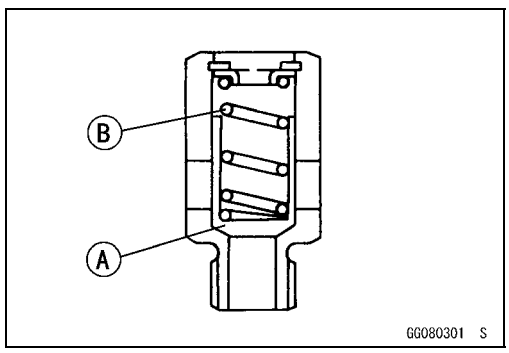

NOTE

○*The relief valve cannot be disassembled and it must be inspected in the assembled state.*

★If the valve movement is not smooth, wash the relief valve with high-flash point solvent, and use compressed air to remove any foreign particles from it.

⚠ WARNING

Clean the oil pressure relief valve in a well -ventilated area, and take care that there is no spark or flame anywhere near the working area. Because of the danger of highly flammable liquids, do not use gasoline or low-flash point solvents.

★If the valve does not move smoothly even after washing it, replace the relief valve. The oil pressure relief valve is precision made with no allowance for replacement of individual parts.

Oil Pump

Oil Pump Removal

- Remove:
  Alternator Rotor and Starter Clutch Gear (see Alternator Rotor Removal in the Electrical System chapter)
  Oil Pump Drive Chain Tensioner Bolt [A]
  Chain Guide Bolt [B] and Collar
  Chain Guide [C]

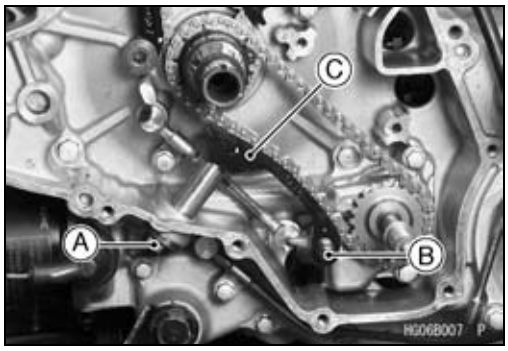

- Remove:
  Oil Pump Bolts [A]
  Oil Pump Drive Chain [B] and Oil Pump Assembly [C]

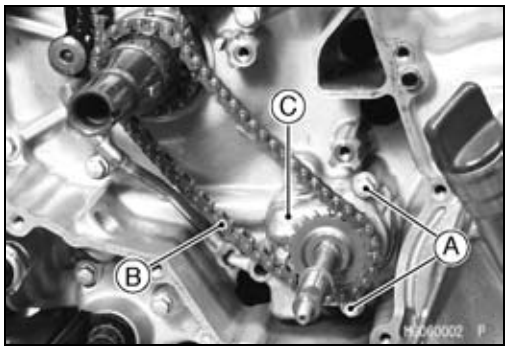

- Remove:
  Circlip [A]
  Inner Rotor [B]
  Outer Rotor [C]
  Oil Pump Drive Shaft [D]
  Oil Pump Cover [E]

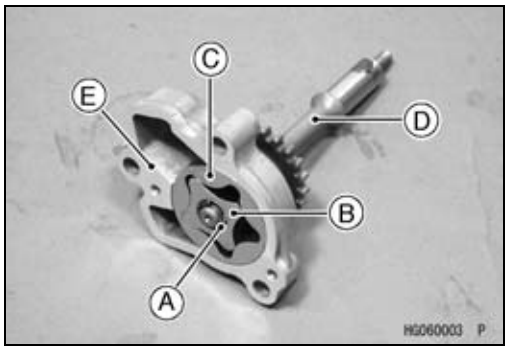

Oil Pump Installation

- Apply engine oil:
  Oil Pump Drive Shaft
  Inner and Outer Rotors
- Install:
  Oil Pump Drive Shaft
  Oil Pump Cover
  Inner Rotor
  Outer Rotor
  New Circlip

- Check to see that the dowel pins [A] are in place.
- Apply engine oil to the oil pump hole [B].

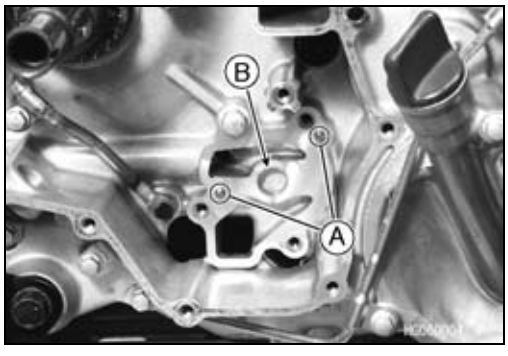

Oil Pump

- Install the oil pump drive chain [A] with the oil pump assembly [B].
- Tighten:

  Torque - Oil Pump Bolts [C]: 8.8 N·m (0.90 kgf·m, 78 in·lb)

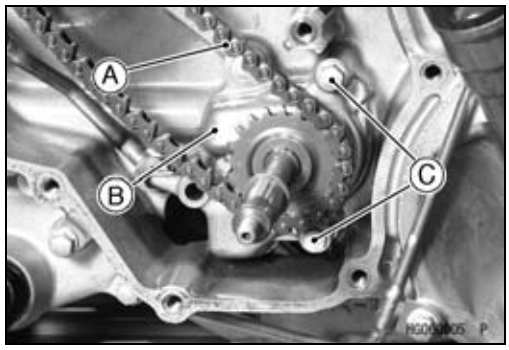

- Install:
  Chain Guide [A] and Collar [B]
- Tighten:

  Torque - Chain Guide Bolt: 8.8 N·m (0.90 kgf·m, 78 in·lb)

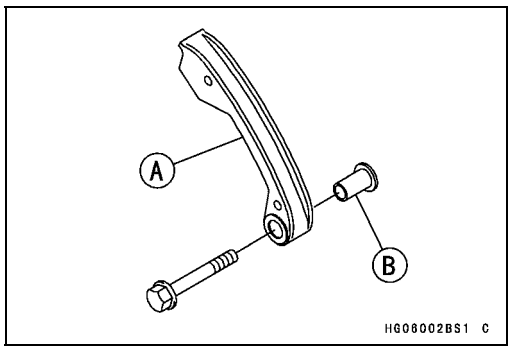

- Apply grease to the O-ring [A].
- Install:
  Pin [B]
  Spring [C]
  O-ring
  Oil Pump Drive Chain Tensioner Bolt [D]
- Tighten:

  Torque - Oil Pump Drive Chain Tensioner Bolt: 25 N·m (2.5 kgf·m, 18 ft·lb)

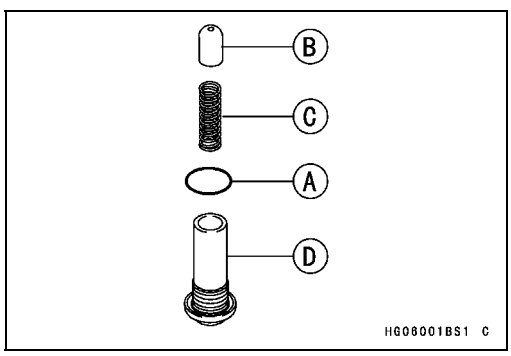

Oil Pipe

Oil Pipe Removal

Engine Left Side Oil Pipe

- Remove:
  Alternator Cover (see Alternator Cover Removal in the Electrical System chapter)
  Oil Pump (see Oil Pump Removal)
  Oil Pipe Bolts [A]
  Oil Pipes [B]

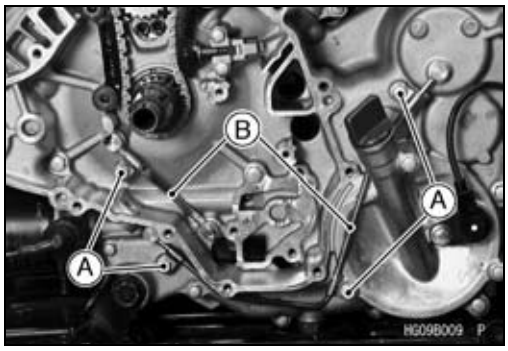

Engine Right Side Oil Pipe

- Remove:
  Drive Pulley (see Drive Pulley Removal in the Converter System chapter)
  Plate Bolts [A]
  Plate [B]

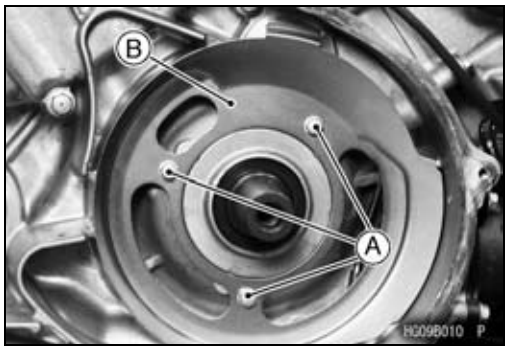

- Remove:
  Oil Pipe Bolt [A]
  Oil Pipe [B]

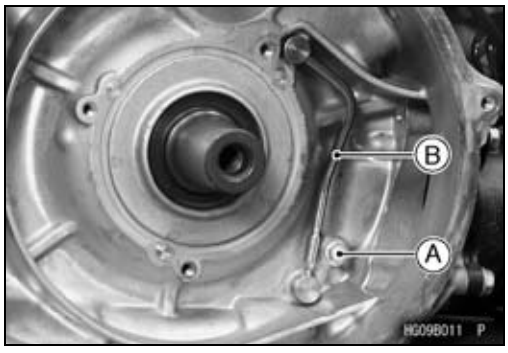

Engine Inside Oil Pipe

- Remove:
  Cylinder Head (see Cylinder Head Removal in the Engine Top End chapter)
  Oil Pipe [A]

Oil Pipe Installation

- Replace the O-ring [A] with new ones if they are damaged.
- Apply engine oil to the O-rings before installation.
- Tighten:

  Torque - Oil Pipe Bolts: 8.8 N·m (0.90 kgf·m, 78 in·lb)

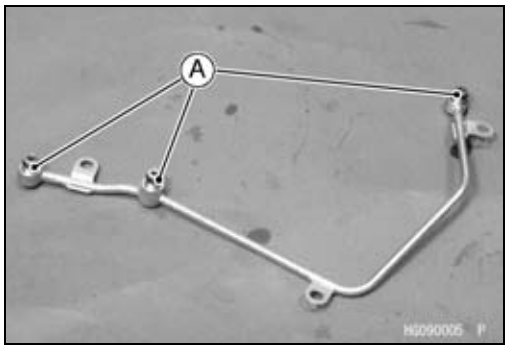

Engine Removal/Installation

Table of Contents

Exploded View

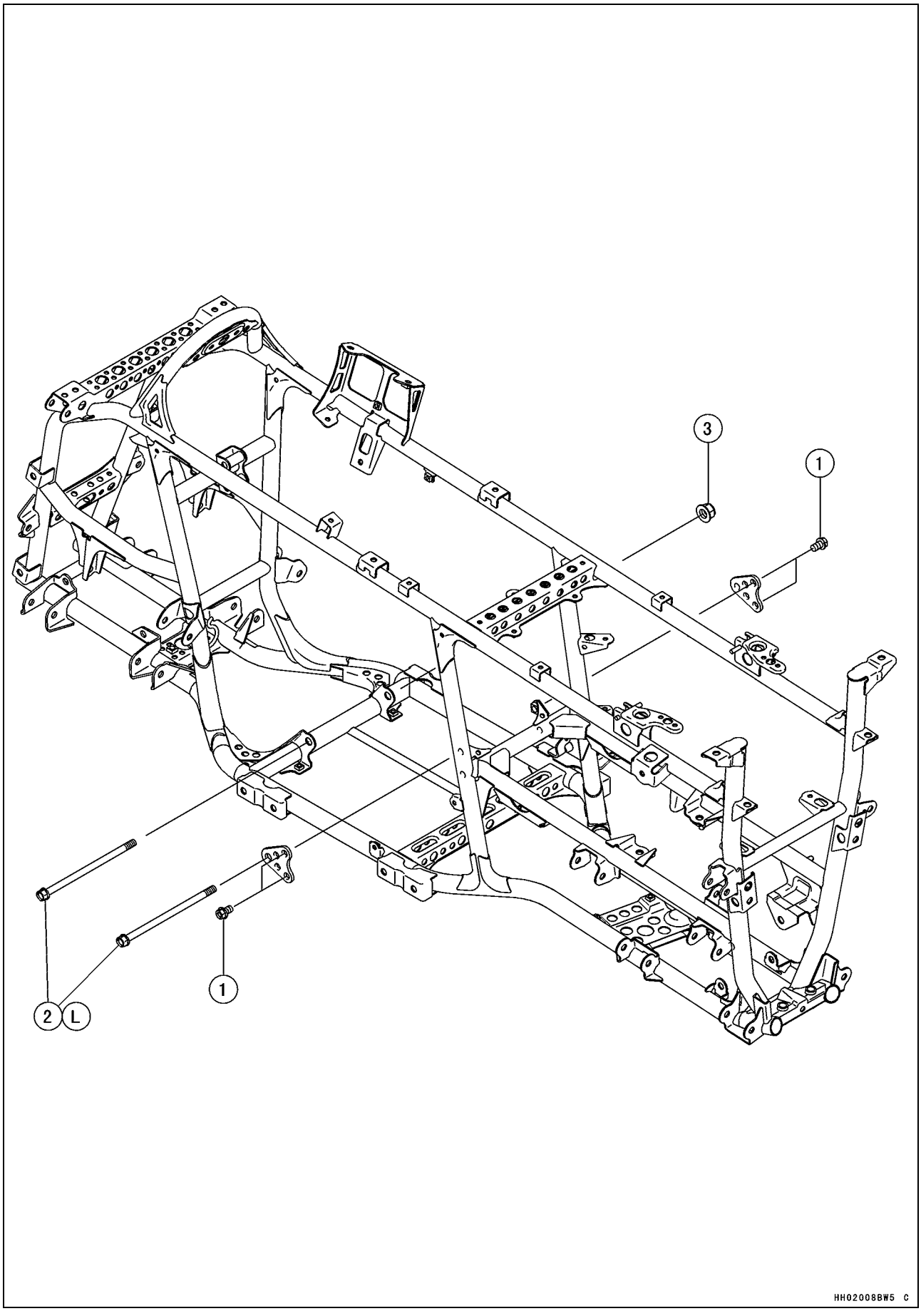

Exploded View

No.	Fastener	Torque			Remarks
		N·m	kgf·m	ft·lb	
1	Engine Mounting Bracket Bolts	72	7.3	53	
2	Engine Mounting Bolts	62	6.3	46	L
3	Engine Mounting Nut	62	6.3	46	

L: Apply a non-permanent locking agent.

Engine Removal/Installation

Engine Removal

- Remove:
  Engine Oil (drain)
  Coolant (drain)
  Muffler and Exhaust Pipe (see Muffler and Exhaust Pipe Removal in the Engine Top End chapter)
  Footboards (see Left and Right Footboard Removal in the Frame chapter)
  Carburetor (see Carburetor Removal in the Fuel System chapter)
  Alternator Lead Connector [A]
  Crankshaft Sensor Lead Connector [B]
  Oil Pressure Switch Lead Connector [C]

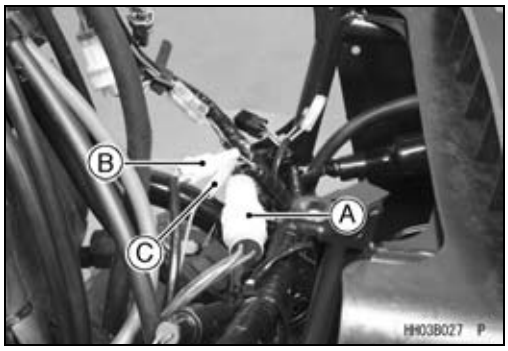

- Remove:
  Water Pipe [A] and Thermostat Housing [B]
  Air Rubber Duct [C]
  Front Propeller Shaft [D]

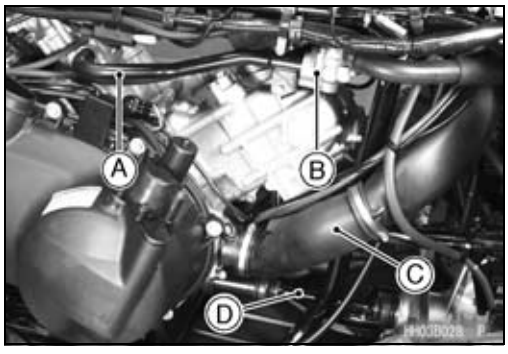

- Remove:
  Ignition Coil [A] (rear)
  Spark Plug Cap [B]
  Shift Shaft Lever [C]
  Vacuum Hoses [D]
  Engine Brake Actuator Lead Connector [E]
  Drive Belt Failure Detection Switch Lead Connector [F]

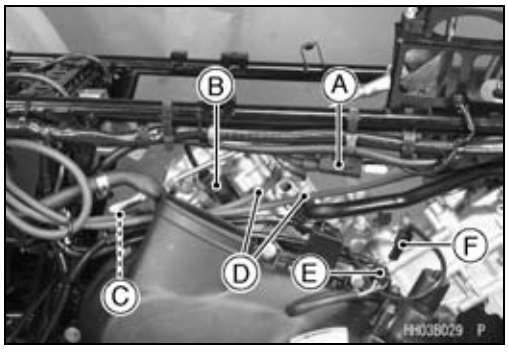

- Remove:
  Speed Sensor Lead Connector [A]
  Rear Propeller Shaft [B]

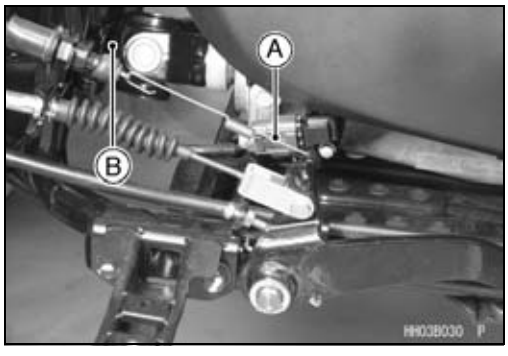

Engine Removal/Installation

- Remove:
  Water Pipe [A]
  Spark Plug Cap [B]

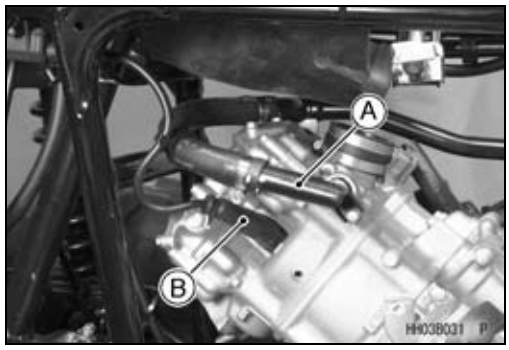

- Remove:
  Coolant Reserve Tank [A]
  Neutral Switch Lead Connector [B]
  Reverse Switch Lead Connector [C]
  Forward/Reverse Detecting Sensor Lead Connector [D]
  Water Hose [E]

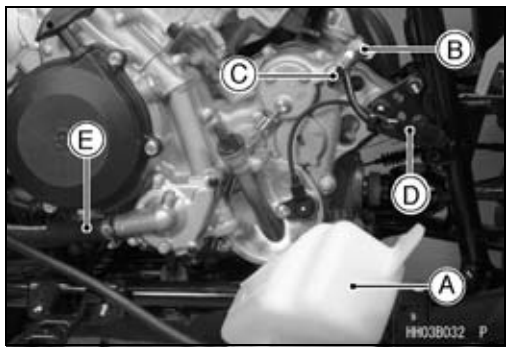

- Remove:
  Footboard Brackets [A]
  Engine Mounting Bolts [B]
  Engine Mounting Bracket [C]

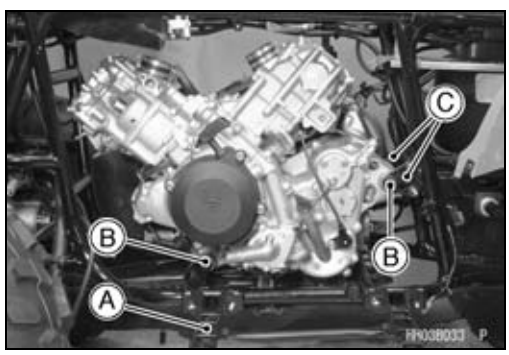

- Remove the engine [A] as shown.

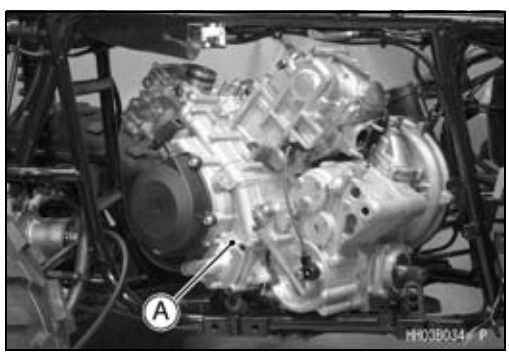

Engine Installation

- Install:
  Engine
  Engine Mounting Bolts (temporary)
  Engine Bracket and Bolts
- Apply a non-permanent locking agent to the engine mounting bolts.
- Tighten:

Torque - Engine Mounting Bracket Bolts: 72 N·m (7.3 kgf·m, 53 ft·lb)
Engine Mounting Bolts: 62 N·m (6.3 kgf·m, 46 ft·lb)
Engine Mounting Nut: 62 N·m (6.3 kgf·m, 46 ft·lb)

Crankshaft/Transmission

Table of Contents

Exploded View

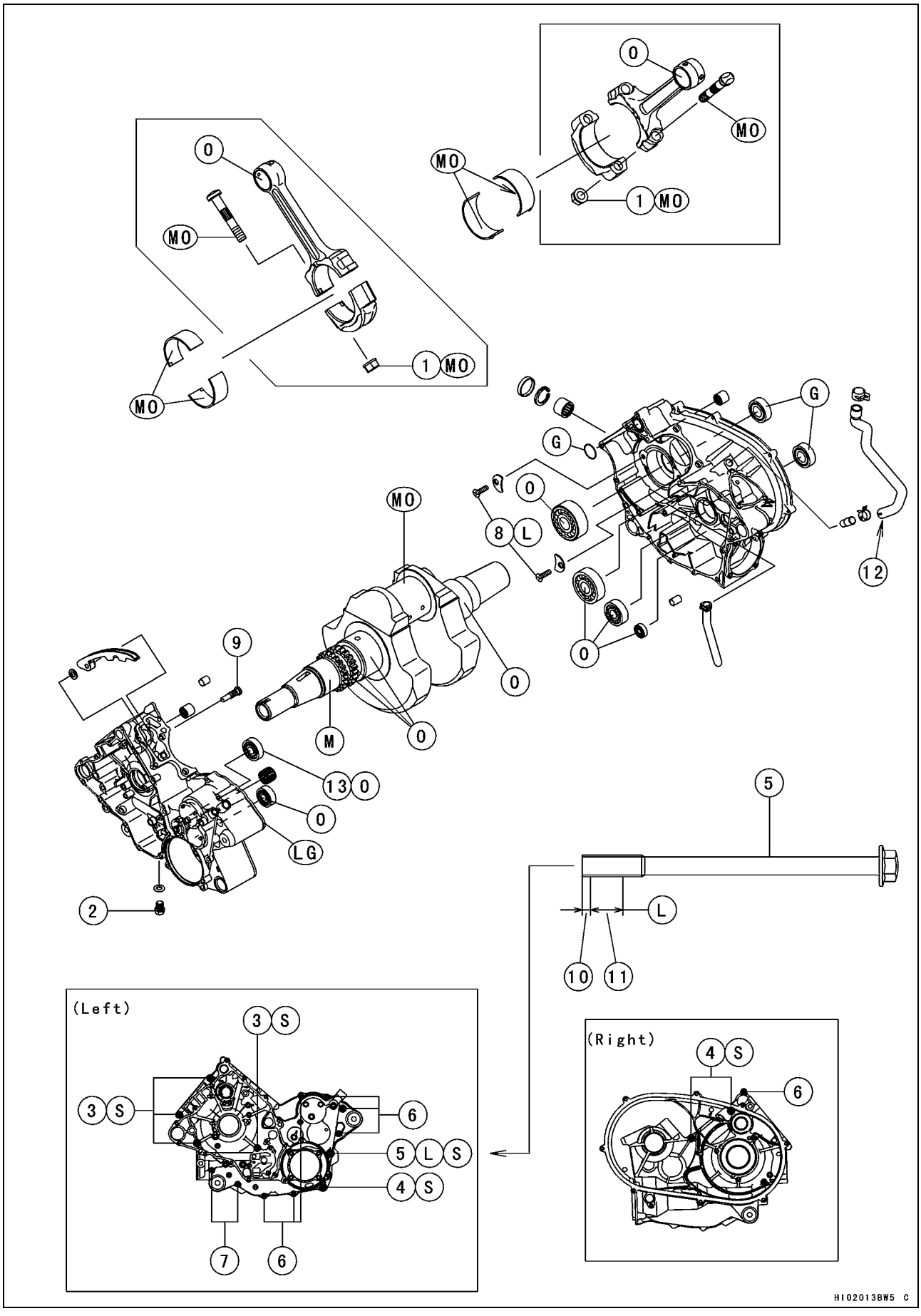

Exploded View

No.	Fastener	Torque			Remarks
		N·m	kgf·m	ft·lb	
1	Connecting Rod Big End Cap Nuts	34	3.5	25	MO
2	Engine Oil Drain Plug	20	2.0	14	
3	Crankcase Bolts (M8) 75 mm (2.95 in.)	20	2.0	14	S
4	Crankcase Bolts (M8) 110 mm (4.33 in.)	20	2.0	14	S
5	Crankcase Bolt (M8) 110 mm (4.33 in.)	20	2.0	14	S, L (1)
6	Crankcase Bolts (M6) 40 mm (1.57 in.)	9.8	1.0	87 in·lb	
7	Crankcase Bolts (M6) 65 mm (2.56 in.)	9.8	1.0	87 in·lb	
8	Bearing Position Plate Screws	4.9	0.50	43 in·lb	L
9	Rear Cylinder Camshaft Chain Guide Bolt	20	2.0	14	

10. Do not apply a non-permanent locking agent to this area (2 ~ 3 mm, 0.08 ~ 0.12 in.)
11. About 12 mm (0.47 in.)
12. White Mark: Face the mark backwards and align it with the crankcase mark.
13. Face the seal of the bearing to the left side (outward).

G: Apply grease.
L: Apply a non-permanent locking agent.
LG: Apply liquid gasket (Kawasaki Bond: 92104-1063 or Three Bond 1216).
M: Apply molybdenum disulfide grease.
MO: Apply molybdenum disulfide oil (mixture of the engine oil and molybdenum disulfide grease in a weight ratio: 10 : 1).
O: Apply engine oil.
S: Follow the specific tightening sequence.

Exploded View

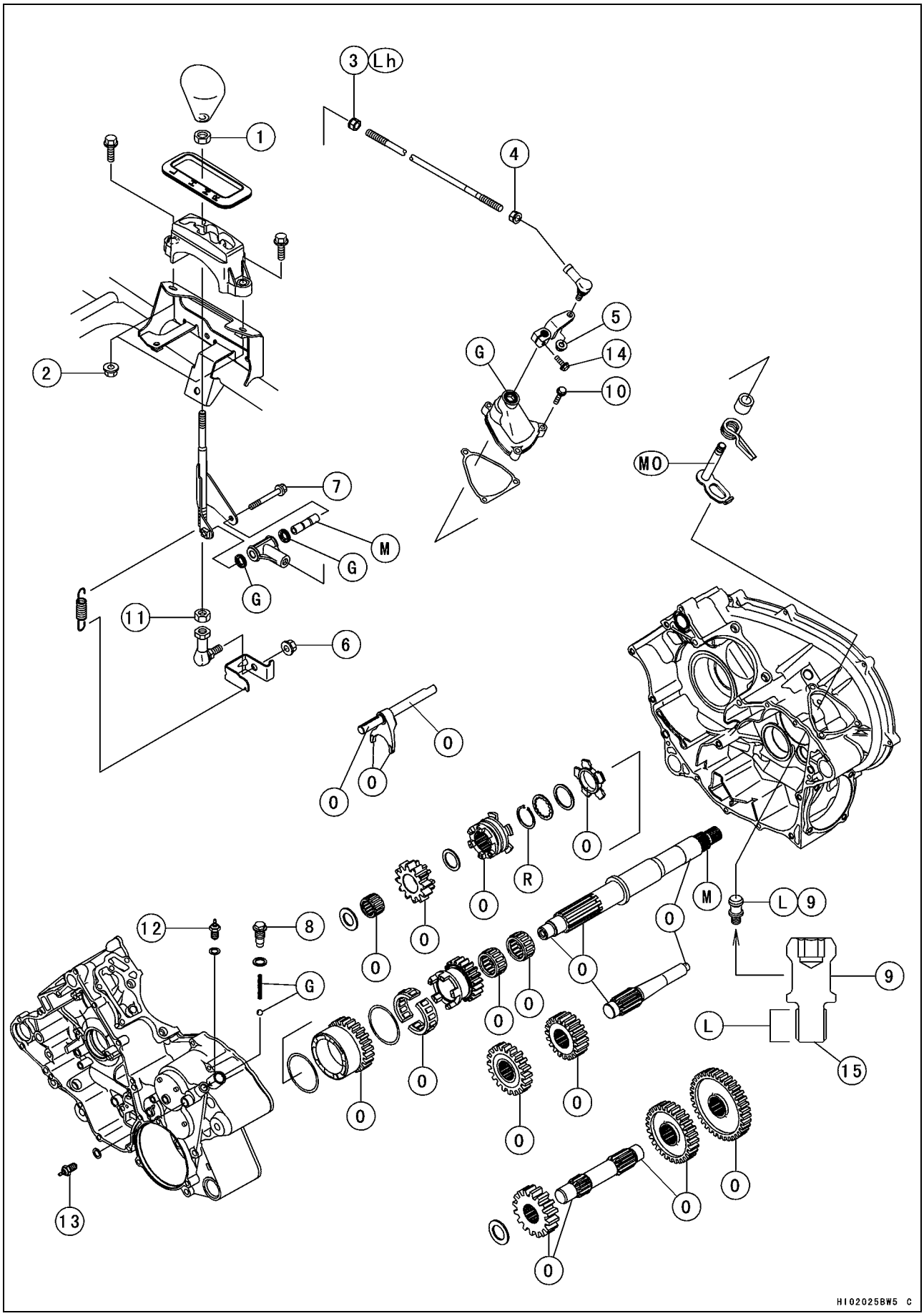

Exploded View

No.	Fastener	Torque			Remarks
		N·m	kgf·m	ft·lb	
1	Grip Hold Nut	9.8	1.0	87 in·lb	
2	Shift Lever Assembly Bracket Nuts	20	2.0	14	
3	Tie-rod End Front Locknut	9.8	1.0	87 in·lb	Lh
4	Tie-rod End Rear Locknut	9.8	1.0	87 in·lb	
5	Tie-rod End Nut	20	2.0	14	
6	Shift Lever Assembly Nut	20	2.0	14	
7	Tie-rod End Bolt	9.8	1.0	87 in·lb	
8	Shift Shaft Positioning Bolt	25	2.5	18	
9	Shift Shaft Spring Bolt	25	2.5	18	L
10	Shift Shaft Cover Bolts	8.8	0.90	78 in·lb	
11	Tie-rod End Locknut	20	2.0	14	
12	Neutral Position Switch	15	1.5	11	
13	Reverse Position Switch	15	1.5	11	
14	Shift Lever Clamp Bolt	14	1.4	10	

15. Do not apply a non-permanent locking agent to this end.
G: Apply grease.
L: Apply a non-permanent locking agent.
Lh: Left-hand Threads
M: Apply molybdenum disulfide grease.
MO: Apply molybdenum disulfide oil (mixture of the engine oil and molybdenum disulfide grease in a weight ratio: 10 : 1).
O: Apply engine oil.
R: Replacement Part

Specifications

Item	Standard	Service Limit
Crankshaft, Connecting Rods		
Connecting Rod Bend	– – –	TIR 0.2/100 mm (0.008/3.94 in.)
Connecting Rod Twist	– – –	TIR 0.2/100 mm (0.008/3.94 in.)
Connecting Rod Big End Side Clearance	0.16 ~ 0.46 mm (0.0063 ~ 0.0181 in.)	0.7 mm (0.028 in.)
Connecting Rod Big End Bearing Insert/Crankpin Clearance	0.028 ~ 0.052 mm (0.0011 ~ 0.0020 in.)	0.09 mm (0.0035 in.)
Crankpin Diameter:	39.984 ~ 40.000 mm (1.5742 ~ 1.5748 in.)	39.97 mm (1.5736 in.)
Marking:		
None	39.984 ~ 39.992 mm (1.5742 ~ 1.57449 in.)	– – –
○	39.993 ~ 40.000 mm (1.57452 ~ 1.5748 in.)	– – –
Connecting Rod Big End Inside Diameter:	43.000 ~ 43.016 mm (1.6929 ~ 1.6939 in.)	– – –
Marking:		
None	43.000 ~ 43.008 mm (1.6929 ~ 1.69323 in.)	– – –
○	43.009 ~ 43.016 mm (1.69326 ~ 1.6935 in.)	– – –
Connecting Rod Big End Bearing Insert Thickness:		
Brown	1.482 ~ 1.486 mm (0.05835 ~ 0.05850 in.)	– – –
Yellow	1.486 ~ 1.490 mm (0.05850 ~ 0.05866 in.)	– – –
Green	1.490 ~ 1.494 mm (0.05866 ~ 0.05882 in.)	– – –

Connecting Rod Big End Bearing Insert Selection:

Con-rod Big End Bore Diameter Marking	Crankpin Diameter Marking	Bearing Insert	
		Size Color	Part Number
None	○	Brown	92028-1963
None	None	Yellow	92028-1962
○	○		
○	None	Green	92028-1961

Crankshaft Runout	TIR 0.04 mm (0.0016 in.) or less	TIR 0.10 mm (0.0039 in.)
Crankshaft Main Journal Diameter	41.984 ~ 42.000 mm (1.6529 ~ 1.6535 in.)	41.96 mm (1.652 in.)
Crankshaft Main Bearing Bore Diameter	42.025 ~ 42.041 mm (1.6545 ~ 1.6552 in.)	42.08 mm (1.6567 in.)

Specifications

Item	Standard	Service Limit
Transmission		
Shift fork Ear Thickness	5.9 ~ 6.0 mm (0.2322 ~ 0.2362 in.)	5.8 mm (0.228 in.)
Shift Groove Width	6.05 ~ 6.15 mm (0.2382 ~ 0.2421 in.)	6.25 mm (0.2460 in.)

Special Tools and Sealant

Outside Circlip Pliers:
57001-144

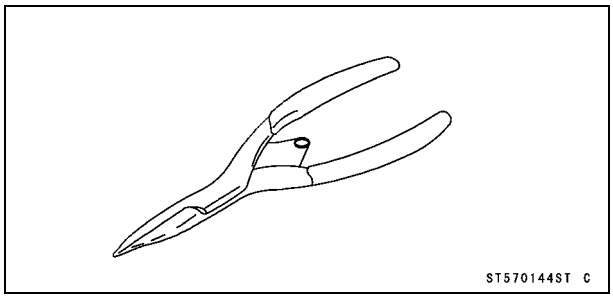

Crankshaft Jig:
57001-1174

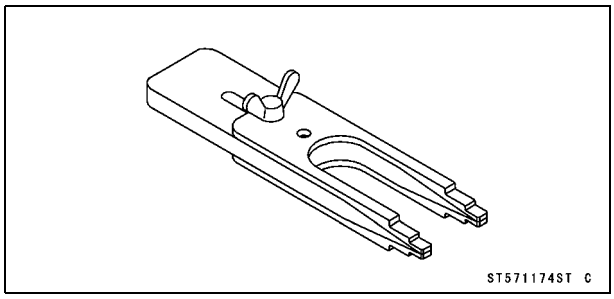

Bearing Driver Set:
57001-1129

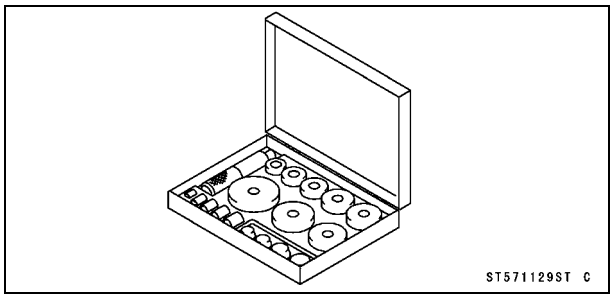

Kawasaki Bond (Liquid Gasket - Gray):
92104-1063

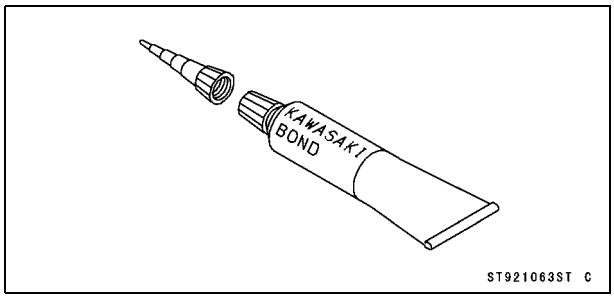

Crankcase

Crankcase Disassembly

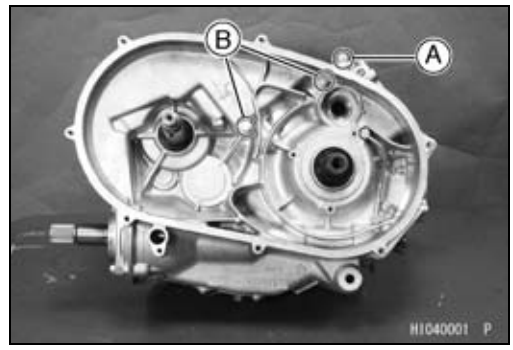

- Remove:
  Engine (see Engine Removal in the Engine Removal/Installation chapter)
  Starter Motor (see Starter Motor Removal in the Electrical System chapter)
  Oil Filter
  Recoil Starter
  Cylinder Blocks and Pistons (see Cylinder and Piston Removal in the Engine Top End chapter)
  Intermediate Shaft and Chains (see Camshaft Chain Removal in the Engine Top End chapter)
  Right Crankcase Bolt (M6) [A]
  Right Crankcase Bolts (M8) [B]

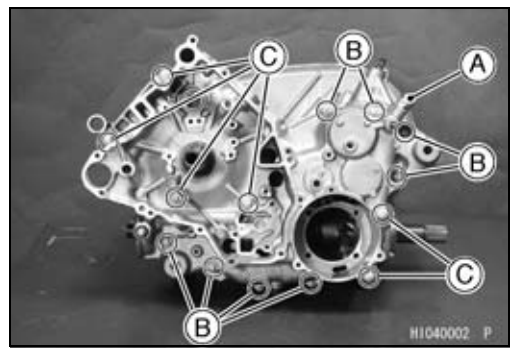

- Remove:
  Shift Shaft Positioning Bolt [A], Washer, Spring, and Steel Ball
  Left Crankcase Bolts (M6) [B]
  Left Crankcase Bolts (M8) [C]

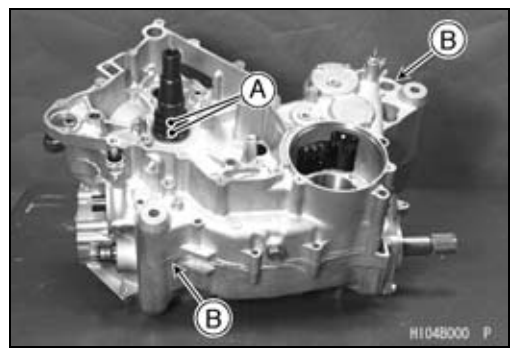

- Wrap the teeth on the sprockets [A] by taping for protecting the bushing in the crankcase.
- Using the pry points [B], split the crankcase halves.
- Lift off the left crankcase half.

Crankcase Assembly

CAUTION

The right and left crankcase halves are machined at the factory in the assembled state, so the crankcase halves must be replaced as a set.

NOTE

○*Be certain that all parts are cleaned thoroughly before assembly.*
○*Blow through all oil passages with compressed air to clear any blockage in the crankcase halves and crankshaft.*

⚠ WARNING

Clean the engine parts in a well-ventilated area, and take care that there are no sparks or flame anywhere near the working area; this includes any appliance with a pilot light. Do not use gasoline or low-flash point solvents to clean parts. A fire or explosion could result.

Crankcase

- Press and insert the new ball bearings until they are bottomed.

  Special Tool - Bearing Driver Set: 57001-1129

  [A] Ball Bearing
  [B] Ball Bearing (sealed side towards crankcase)
- Press and insert the new needle bearings so that the bearing surfaces are flush with the end of the hole.
  [C] Needle Bearing
  [D] Needle Bearing (Insert it from outside.)
- Apply engine oil to the bearings.
- Install:
  Oil Pressure Relief Valve [E] (see Oil Pressure Relief Valve Installation in the Engine Lubrication System chapter)

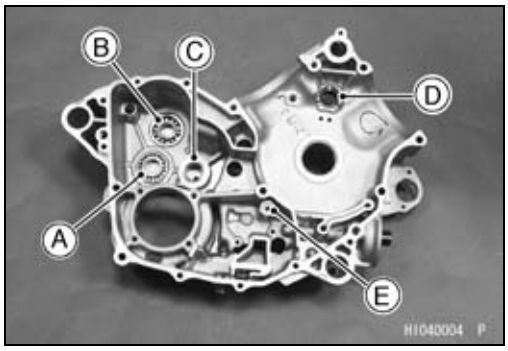

- Install:
  Rear Cylinder Camshaft Chain Guide [A]
- Tighten:

  Torque - Rear Cylinder Camshaft Chain Guide Bolt [B]: 20 N·m (2.0 kgf·m, 14 ft·lb)

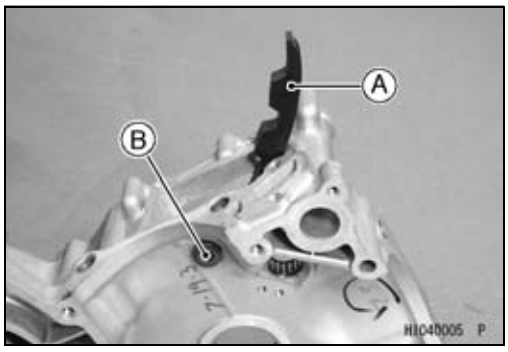

- Press and insert the new ball bearings [A] until they are bottomed.

  Special Tool - Bearing Driver Set: 57001-1129
- Press and insert the new needle bearings so that the bearing surfaces are flush with the end of the hole.
  [B] Needle Bearing
  [C] Needle Bearing (Insert it from outside.)
- Apply engine oil to the bearings.

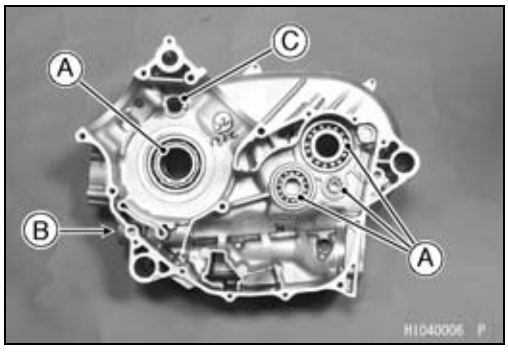

- Install the ball bearing [A] so that the stepped side faces outside [B].
- Install:
  Plates [C]
- Apply a non-permanent locking agent to the bearing position plate screws [D].
- Tighten:

  Torque - Bearing Position Plate Screws: 4.9 N·m (0.50 kgf·m, 43 in·lb)

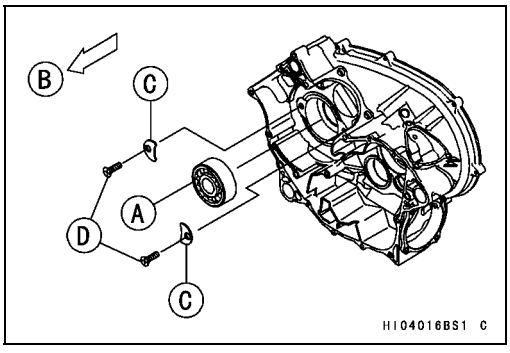

Crankcase

- Be sure the following parts are in place in the right crankcase half.
  Crankshaft
  Transmission Shafts and Shift Rod [A]
  Spacers [B]
  Oil Tube [C]
  Oil Screen [D]
  O-ring (Apply Grease) [E]
  Dowel Pins [F]

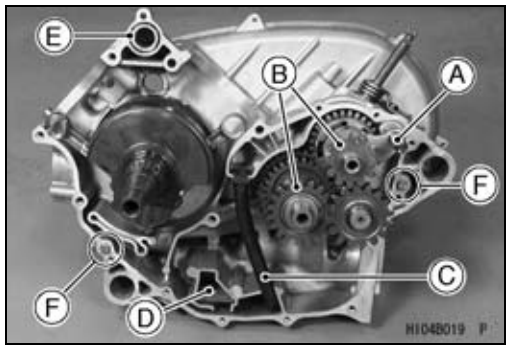

- Apply liquid gasket [A] to mating surface of the left crankcase half.

  Sealant - Kawasaki Bond: 92104-1063 or
  Three Bond 1216

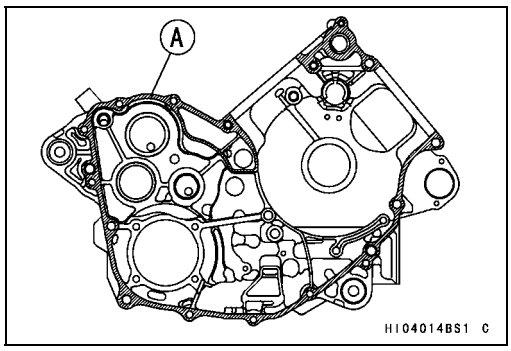

- Apply a non-permanent locking agent to the area [C] (12 mm, 0.47 in.) except for the tip [D] (2 ~ 3 mm, 0.08 ~ 0.12 in.).
  Left Crankcase Bolt (M8) [3]
- Tighten the right and left crankcase bolts (M8) following the tightening sequence [1 ~ 8].

  Torque - Crankcase Bolts (M8): 20 N·m (2.0 kgf·m, 14 ft·lb)

  [1, 2, 5, 6] L = 75 mm (2.95 in.)
  [3, 4, 7, 8] L = 110 mm (4.33 in.)
- Tighten:

  Torque - Crankcase Bolts (M6): 9.8 N·m (1.0 kgf·m, 87 in·lb)

  [A] L = 40 mm (1.57 in.)
  [B] L = 65 mm (2.56 in.)

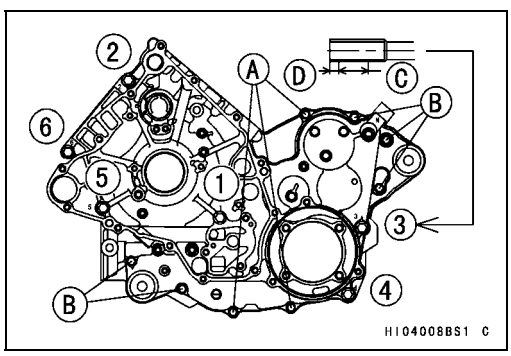

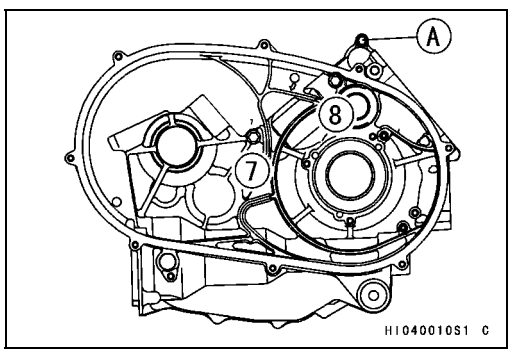

- Grease the lip [A] of the oil seal [B] and press the seal 3 mm (0.12 in.) [C] inwards from the end of the boss.

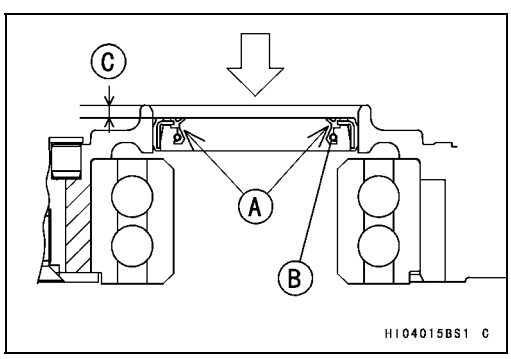

Crankcase

- Install the breather tube [A] on the crankcase fitting.
  - ○Align the white line on the tube with the mark [B] on the crankcase.
  - ○Face the open end of the clamp [C] towards the left side [D] as shown.

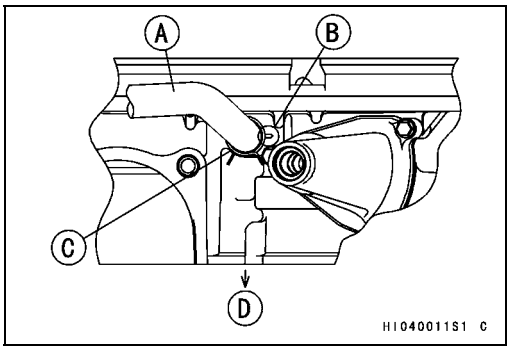

- Apply grease to the steel ball [A] and spring [B].
- Install:
  Steel Ball
  Spring
  Washer [C]
  Shift Shaft Positioning Bolt [D]
- Tighten:

  Torque - Shift Shaft Positioning Bolt: 25 N·m (2.5 kgf·m, 18 ft·lb)

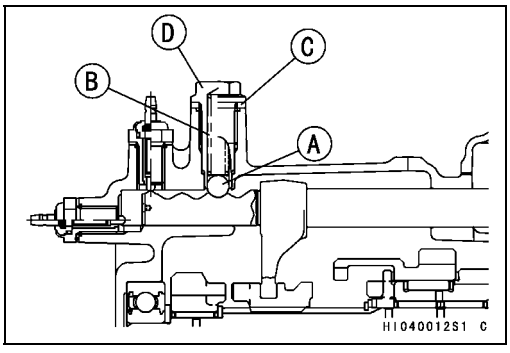

- Check:
  Crankshaft and driven shaft turn freely.

★If any of the shafts do not turn freely, split the crankcase to locate the problem.

Crankshaft/Connection Rod

Crankshaft Removal

- Split the crankcase (see Crankcase Disassembly).
- Remove the crankshaft [A] from the crankcase using a press.

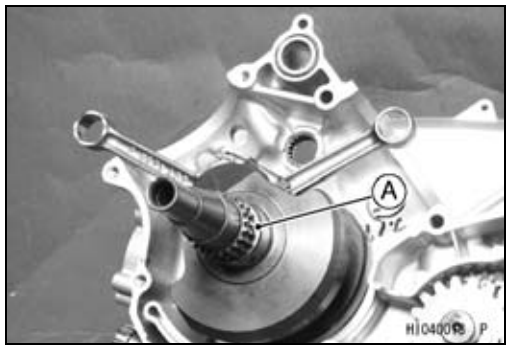

Crankshaft Installation

- The left shaft [A] of the crankshaft is longer than the right shaft [B].
- Apply engine oil to the both main journals.
- Insert the right crankshaft tapered end (the shorter end) into the right crankcase using a press and two crankshaft jigs.

Special Tools - Crankshaft Jig: 57001-1174 × 2

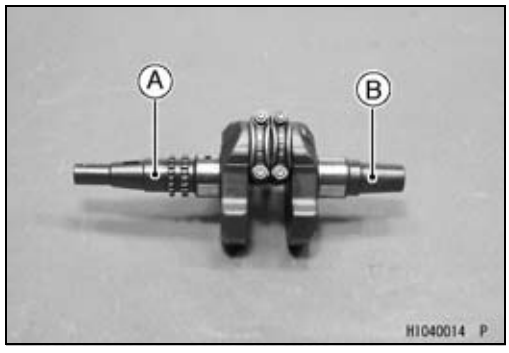

Connecting Rod Removal

- Remove the crankshaft (see Crankshaft Removal).
- Remove the connecting rods [A] from the crankshaft.

NOTE

○*Mark and record the locations of the connecting rods and their big end caps [B] so that they can be installed in their original positions.*

○Remove the connecting rod big end nuts, and take off the rod and cap with the bearing inserts.

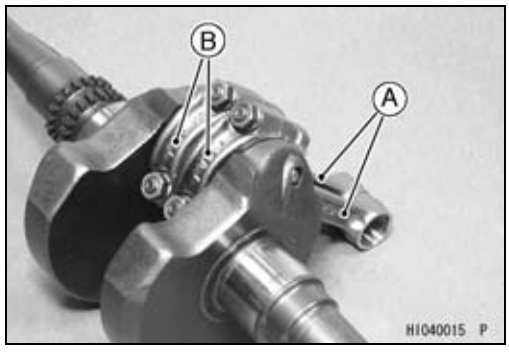

Connecting Rod Installation

CAUTION

If the connecting rods, bearing inserts, or crankshaft are replaced with new ones, select the bearing insert and check clearance with a plastigage before assembling the engine to be sure the correct bearing inserts are installed.

- Apply molybdenum disulfide oil:
  Inner Surface [A] of Bearing Inserts
- Face the “OUT” marks [B] of both connecting rods towards the outsides of the crankshaft.
- Fit the connecting rod cap so that the grooves [C] of the cap and connecting rod are on the same side.

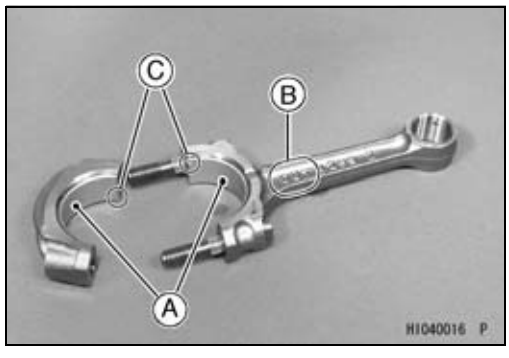

Crankshaft/Connection Rod

- Apply molybdenum disulfide oil:
  Threads [A] of Connecting Rod Big End Cap Bolts
  Seating Surface [B] of Connecting Rod Big End Cap Nuts [C]
- Tighten:

  Torque - Connecting Rod Big End Cap Nuts: 34 N·m (3.5 kgf·m, 25 ft·lb)

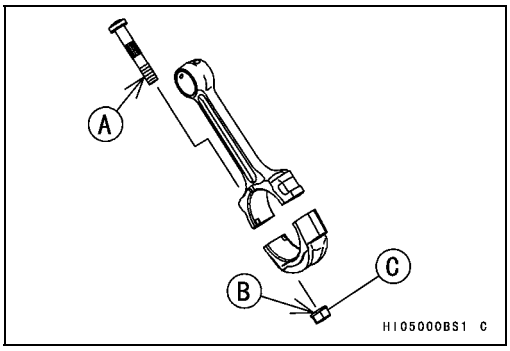

Crankshaft/Connecting Rod Cleaning

- After removing the connecting rods from the crankshaft, clean them with a high flash-point solvent.
- Blow the crankshaft oil passages with compressed air to remove any foreign particles or residue that may have accumulated in the passages.

Connecting Rod Bend Inspection

- Remove the connecting rod big end bearing inserts, and reinstall the connecting rod big end cap.
- Select an arbor [A] of the same diameter as the connecting rod big end, and insert the arbor through the connecting rod big end.
- Select an arbor of the same diameter as the piston pin and at least 100 mm (3.94 in.) long, and insert the arbor [B] through the connecting rod small end.
- On a surface plate, set the big-end arbor on a V block [C].
- With the connecting rod held vertically, use a height gauge to measure the difference in the height of the arbor above the surface plate over a 100 mm (3.94 in.) length to determine the amount of connecting rod bend.

★If connecting rod bend exceeds the service limit, the connecting rod must be replaced.

Connecting Rod Bend
Service Limit: TIR 0.2/100 mm (0.008/3.94 in.)

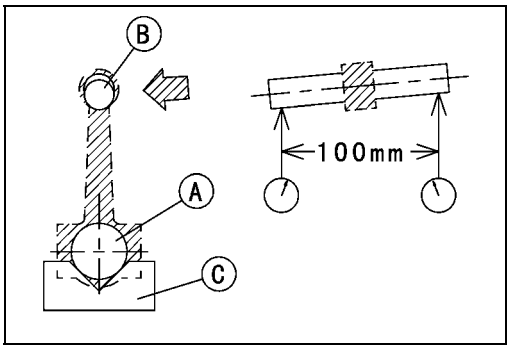

Connecting Rod Twist Inspection

- With the big-end arbor [A] still on the V block [C], hold the connecting rod horizontally and measure the amount that the arbor [B] varies from being parallel with the surface plate over a 100 mm (3.94 in.) length of the arbor to determine the amount of connecting rod twist.

★If connecting rod twist exceeds the service limit, the connecting rod must be replaced.

Connecting Rod Twist
Service Limit: TIR 0.2/100 mm (0.008/3.94 in.)

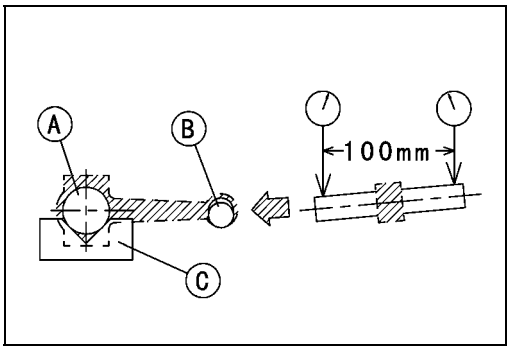

Crankshaft/Connection Rod

Connecting Rod Big End Side Clearance Inspection

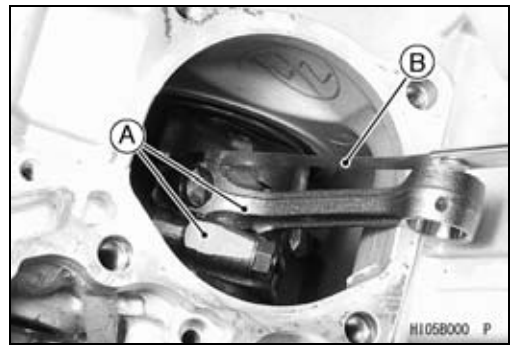

- Measure the side clearance of the connecting rod big end [A].

○Insert a thickness gauge [B] between the big end and either crank web to determine clearance.

Connecting Rod Big End Side Clearance
Standard: 0.16 ~ 0.46 mm (0.0063 ~ 0.0181 in.)
Service Limit: 0.7 mm (0.028 in.)

★If the clearance exceeds the service limit, replace the connecting rod with new one and then check clearance again. If clearance is too large after connecting rod replacement, the crankshaft also must be replaced.

Connecting Rod Big End Bearing/Crankpin Wear Inspection

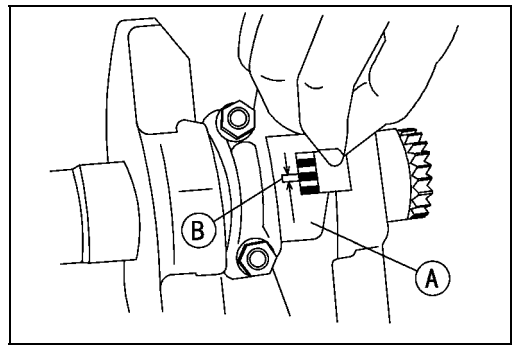

- Measure the bearing insert/crankpin [A] clearance with plastigage [B].

○Tighten the big end cap nuts to the specified torque.

Torque - Connecting Rod Big End Cap Nuts: 34 N·m (3.5 kgf·m, 25 ft·lb)

NOTE

○*Do not move the connecting rod and crankshaft during clearance measurement.*

Connecting Rod Big End Bearing, Insert/Crankpin Clearance
Standard: 0.028 ~ 0.052 mm (0.0011 ~ 0.0020 in.)
Service Limit: 0.09 mm (0.0035 in.)

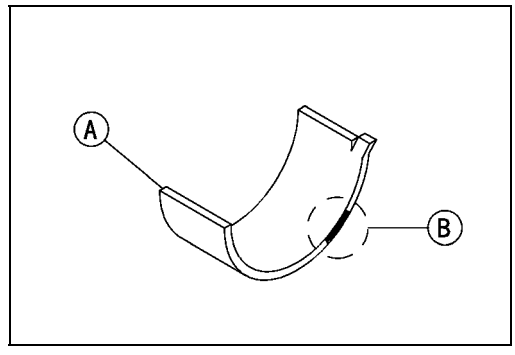

★If the clearance is within the standard, no bearing insert replacement is required.

★If the clearance is between 0.052 mm (0.0020 in.) and the service limit 0.09 mm (0.0035 in.), replace the bearing inserts [A] with inserts painted green [B]. Check insert/crankpin clearance with plastigage. The clearance may exceed the standard slightly, but it must not be less than the minimum in order to avoid bearing seizure.

★If the clearance exceeds the service limit, measure the diameter of the crankpin.

Crankpin Diameter
Standard: 39.984 ~ 40.000 mm (1.5742 ~ 1.5748 in.)
Service Limit: 39.97 mm (1.5736 in.)

★If the crankpin has worn past the service limit, replace the crankshaft with a new one.

Crankshaft/Connection Rod

★If the measured crankpin diameter [A] is not less than the service limit, but does not coincide with the original diameter marking on the crankshaft, make a new mark on it.

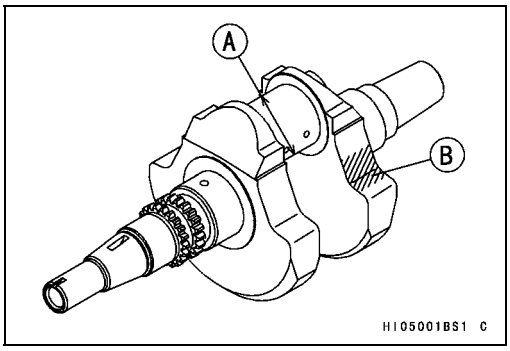

Crankpin Diameter Marks

None: 39.984 ~ 39.992 mm (1.5742 ~ 1.57449 in.)

○: 39.993 ~ 40.000 mm (1.57452 ~ 1.5748 in.)

Crankpin Diameter Mark [B]: "○" mark or no mark

- Measure the connection rod big end inside diameter, and mark each connecting rod big end in accordance with the inside diameter.
- Tighten the big end nuts to the specified torque.

Torque - Connecting Rod Big End Cap Nuts: 34 N·m (3.5 kgf·m, 25 ft·lb)

NOTE

○*The mark already on the big end should almost coincide with the measurement because of little wear.*

Connecting Rod Big End Inside Diameter Marks

None: 43.000 ~ 43.008 mm (1.6929 ~ 1.69323 in.)

○: 43.009 ~ 43.016 mm (1.69326 ~ 1.6935 in.)

Diameter Mark [A]: "○" or no mark

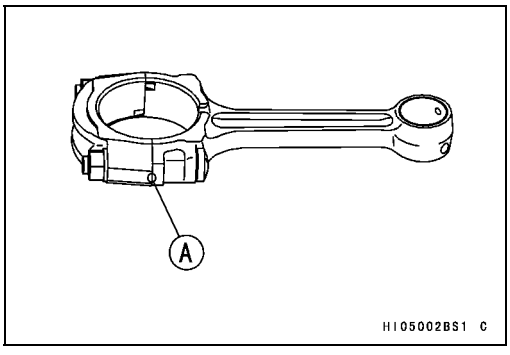

- Select the proper bearing insert [A] in accordance with the combination of the connecting rod and crankshaft coding. Size Color [B]

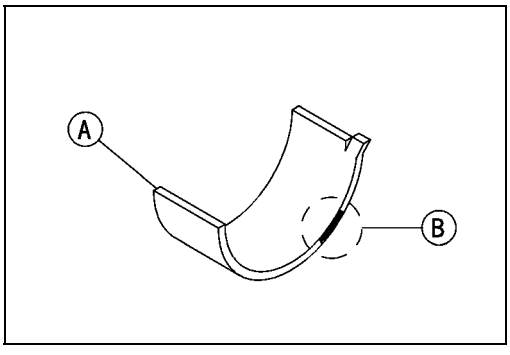

Big End Bearing Insert Selection

Con-rod Big End Bore Diameter Mark	Crankpin Diameter Mark	Bearing Insert	
		Size Color	Part Number
None	○	Brown	92028-1963
None	None	Yellow	92028-1962
○	○		
○	None	Green	92028-1961

- Install the new inserts in the connecting rod and check insert/crankpin clearance with the plastigage.

Crankshaft/Connection Rod

Crankshaft Runout Inspection

- Measure the crankshaft runout.

★If the measurement exceeds the service limit, replace the crankshaft.

Crankshaft Runout

Standard: TIR 0.04 mm (0.0016 in.) or less

Service Limit: TIR 0.10 mm (0.0039 in.)

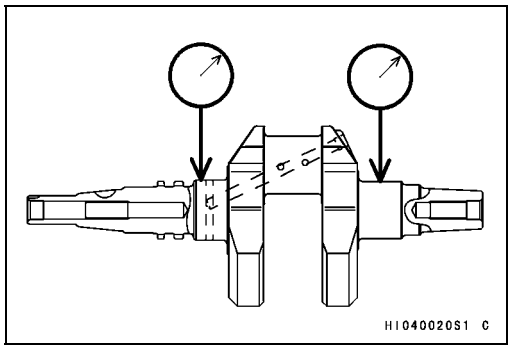

Crankshaft Main Bearing/Journal Wear Inspection

- Measure the diameter [A] of the crankshaft main journal.

Crankshaft Main Journal Diameter

Standard: 41.984 ~ 42.000 mm (1.6529 ~ 1.6535 in.)

Service Limit: 41.96 mm (1.652 in.)

★If any journal has worn past the service limit, replace the crankshaft with a new one.

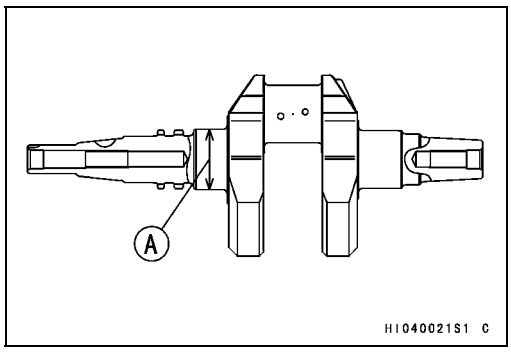

- Measure the main bearing bore diameter [A] in the crankcase halves.

Crankcase Main Bearing Bore Diameter

Standard: 42.025 ~ 42.041 mm (1.6545 ~ 1.6552 in.)

Service Limit: 42.08 mm (1.6567 in.)

★If there is any signs of seizure, damage, or excessive wear, replace the crankcase halves as a set.

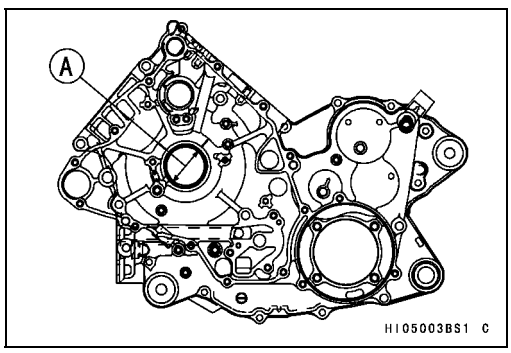

Transmission

Shift Lever Removal

- Set the shift lever in the neutral position.
- Remove:
  Right Side Cover (see Right Side Cover Removal in the Frame chapter)
  Shift Shaft Lever Bolt [A]
- Remove the shift shaft lever [B] from the shift shaft.

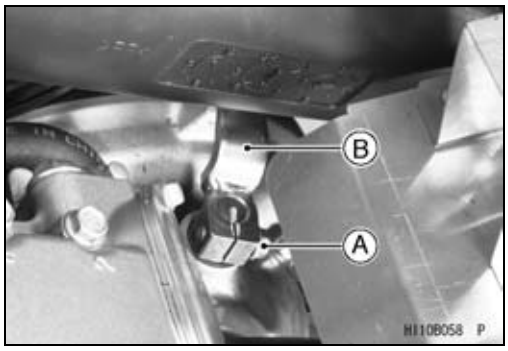

- Remove:
  Nut [A]
  Shift Lever Assembly [B]
  Front [C]

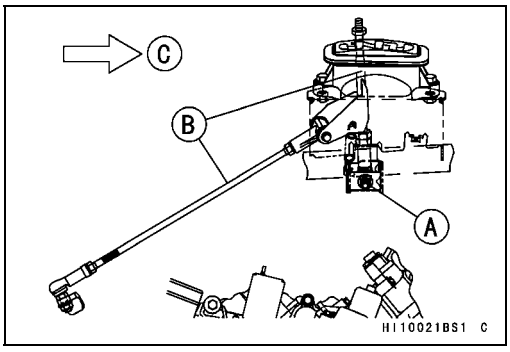

- Remove:
  Tie-rod End Bolt [A]
  Tie-rod [B]

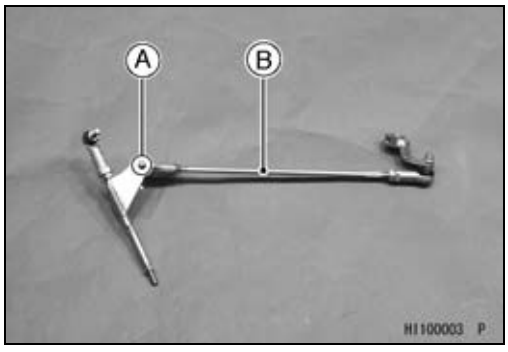

- Remove:
  Oil Seals [A]
  Collar [B]

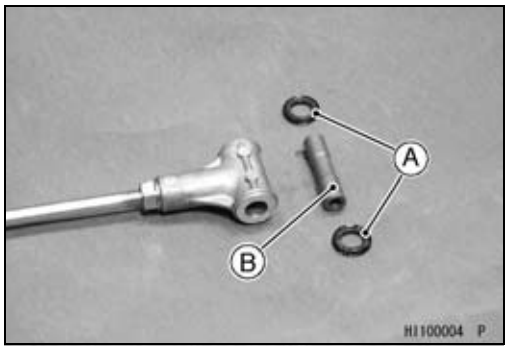

Transmission

Shift Lever Installation

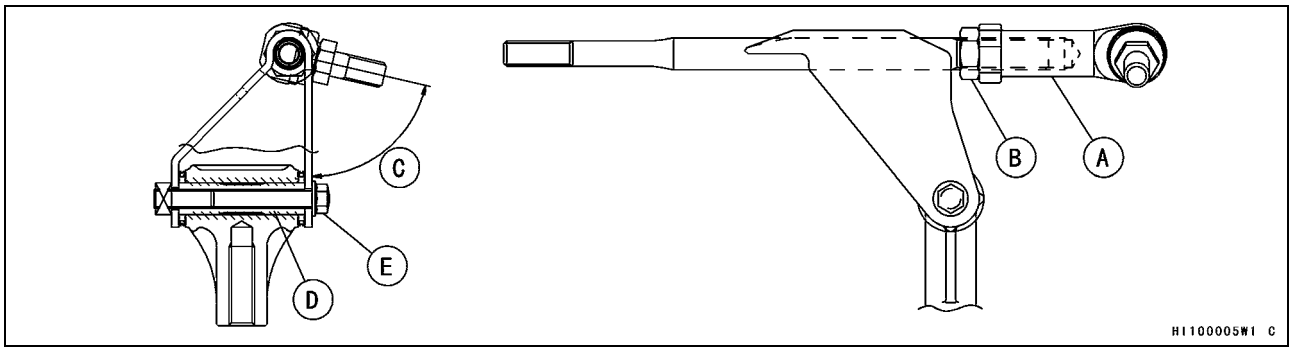

- Twist the tie-rod end [A] and tie-rod end locknut [B] to bottom of the screw and then turn back to dimension with 77° ±10° [C] as shown.
- Tighten the locknut against the tie-rod end:

  Torque - Tie-rod End Locknut: 20 N·m (2.0 kgf·m, 14 ft·lb)
- Apply molybdenum disulfide grease:
  Outside of Tie-rod End Collar [D]
- Apply grease to the oil seals, and install them.
- Tighten:

  Torque - Tie-rod End Bolt [E]: 9.8 N·m (1.0 kgf·m, 87 in·lb)

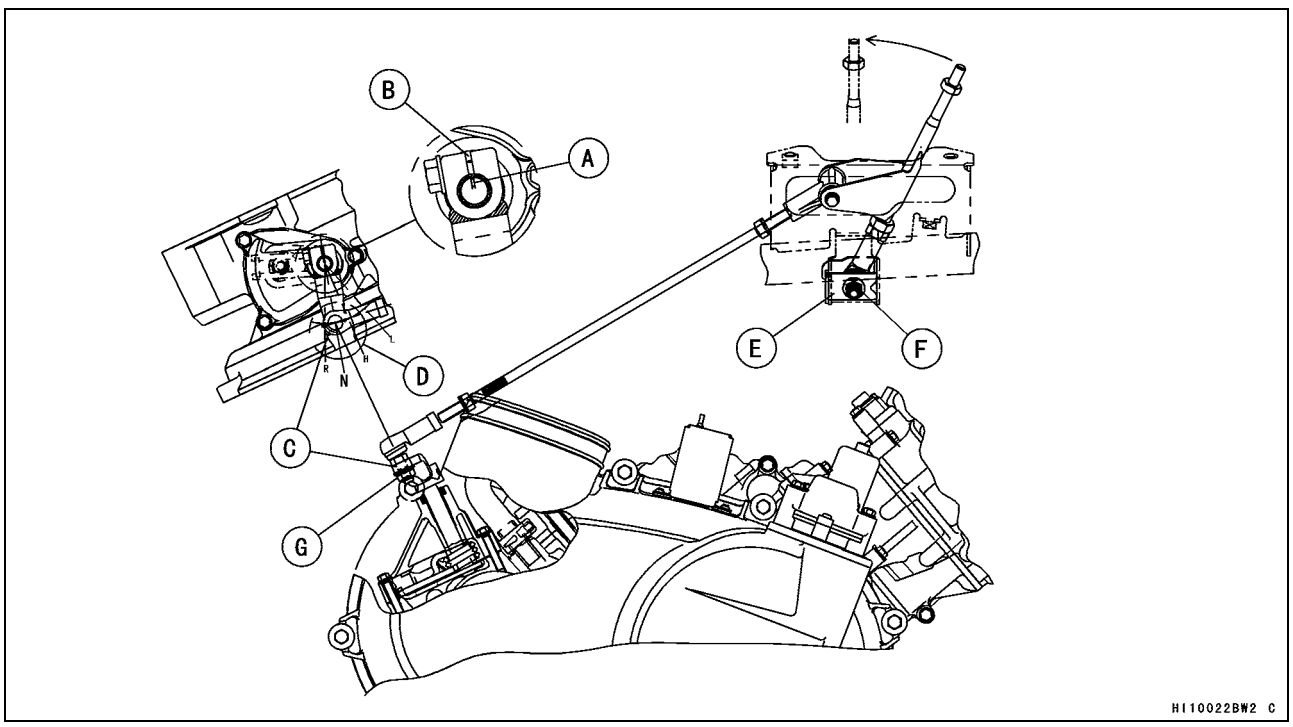

- Align the mark [A] on the shaft end with the slit [B] of the shift shaft lever.
- Position the shift shaft lever end [C] on the boss-center [D] of the crankcase.
- Install:
  Bracket [E]
  Shift Lever Assembly Nut [F]
- Tighten:

  Torque - Shift Lever Assembly Nut: 20 N·m (2.0 kgf·m, 14 ft·lb)
  Tie-rod End Nut [G]: 20 N·m (2.0 kgf·m, 14 ft·lb)

Transmission

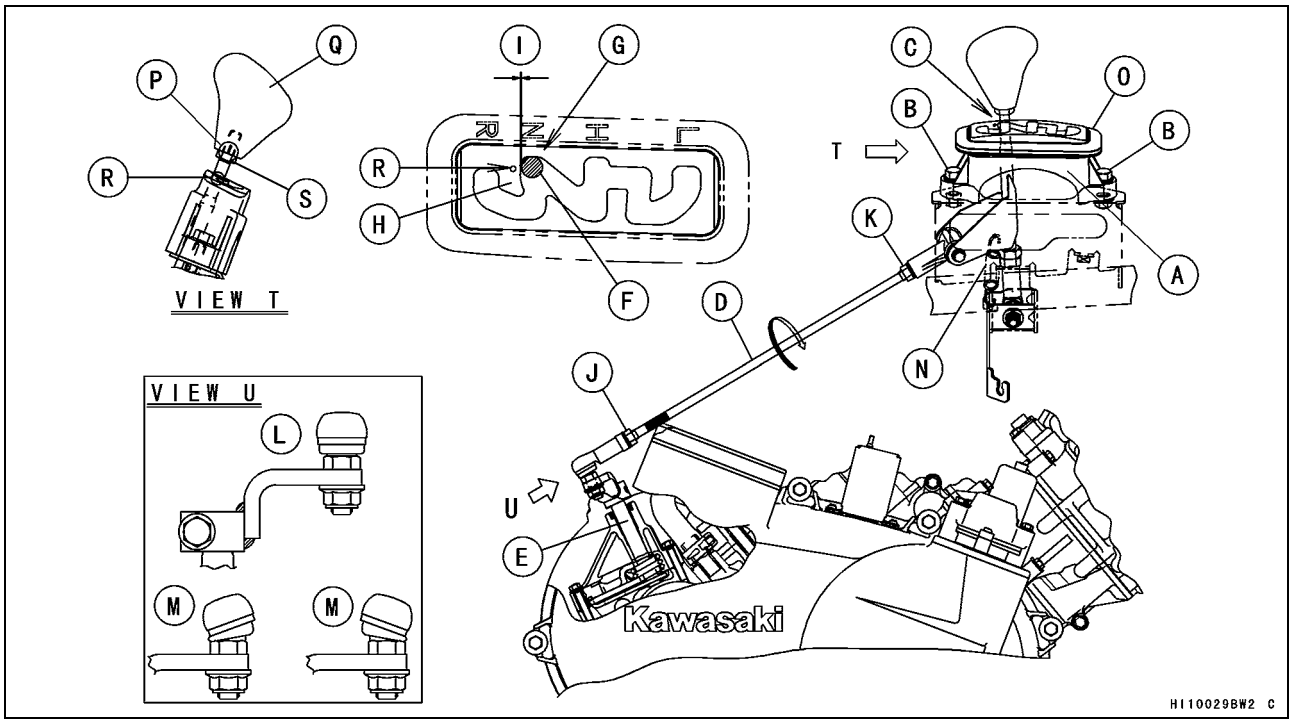

- Install:
  Guide [A]
- Tighten:

  Torque - Shift Lever Assembly Bracket Nuts [B]: 20 N·m (2.0 kgf·m, 14 ft·lb)
- Set the lever assembly in the neutral position [C] while turning the tie-rod [D].

NOTE

○*Do not turn the shift shaft [E] when setting the lever assembly on neutral position.*

○Turn the tie-rod counterclockwise until the rod [F] of the shift lever assembly contacts with the neutral position [G] of the guide [H]. At that time, the clearance [I] between the rod and guide is 0 mm.

○Move the rod [F] to right side and check it returns to left side automatically.

- Tighten:

  Torque - Tie-rod End Rear Locknut [J]: 9.8 N·m (1.0 kgf·m, 87 in·lb)
- Holding the rear tie-rod end, and tighten the front locknut [K].

  Torque - Tie-rod End Front Locknut: 9.8 N·m (1.0 kgf·m, 87 in·lb)

NOTE

○*The front locknut has left-hand threads.*

Transmission

○Do not lean the tie-rod rear end after tightening the front locknut.
  Right [L]
  Wrong [M]
- Check that the shift lever moves from right to left automatically.
- Install:
  Spring [N]
  Trim Seal [O]
- Align the mark [P] of the grip [Q] with the projection [R] on the guide.
- Tighten:

Torque - Grip Hold Nut [S]: 9.8 N·m (1.0 kgf·m, 87 in·lb)

Transmission Removal

- Split the crankcase (see Crankcase Disassembly).
- Remove:
  Shift Shaft Cover Bolts [A]
  Shift Shaft Cover [B]

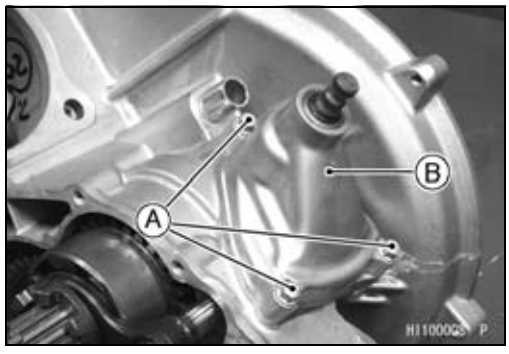

- Remove:
  Shift Shaft Spring Bolt [A]
  Shift Shaft [B]

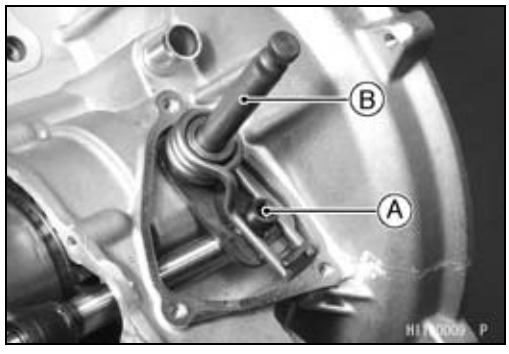

- Remove:
  Reverse Idle Shaft [A]
  Spacer [B]
  Reverse Drive Gear [C], Needle Bearing, and Spacer
  Shifter [D]
  Shift Rod [E]

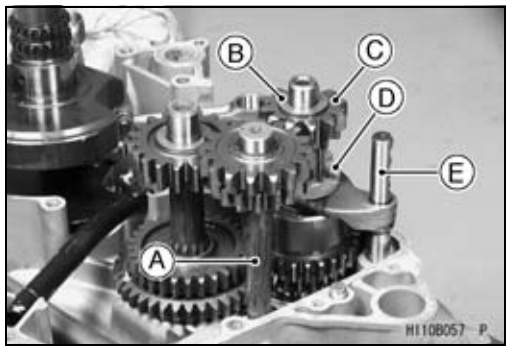

Transmission

- Remove:
  Circlip [A]

  Special Tool - Outside Circlip Pliers: 57001-144

- Remove:
  Spacer [A]
  Idle Gear Assembly [B]
  Washers and Spacer [C]
  Low and High Gears [D]

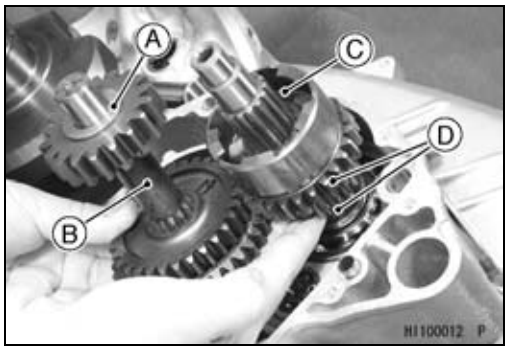

- Remove:
  Needle Bearings [A]
- Remove the driven shaft [B] from the crankcase using a press.

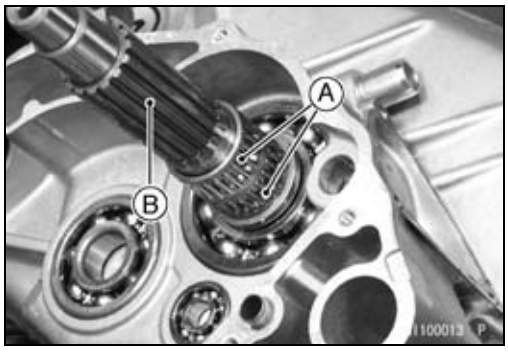

Transmission Installation

- Insert the driven shaft in the crankcase until it is bottomed using a press.
- Apply engine oil to the needle bearings and install them.

- Install the following parts on the low gear [A].
  Needle Bearings [B]
  Spacer [C] (P/No. 92026-1599, 48.2 × 54.3 × 1.0)
  High Gear [D]

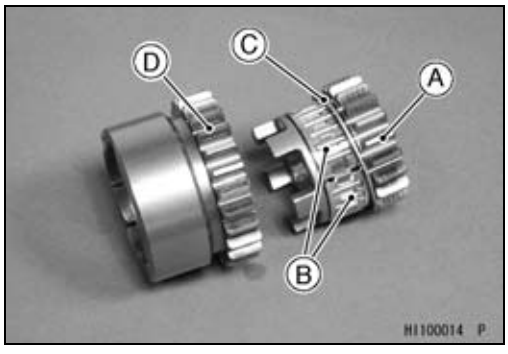

Transmission

- Install:
  Idle Shaft [A] with Gear Assembly [B]
  Spacer [C]
  Spacer [D] (P/No. 92026-1599, 48.2 × 54.3 × 1.0)
- Apply engine oil to the inner surface of the spacer [E].
- Install the spacer [E] so that the stepped side [F] faces outward.

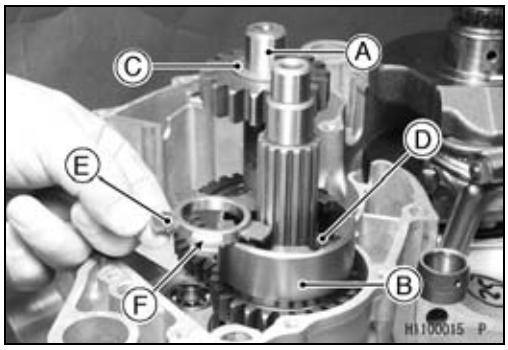

- Install:
  Spacer
  Toothed Washer [A]
  Circlip

  Special Tool - Outside Circlip Pliers: 57001-144

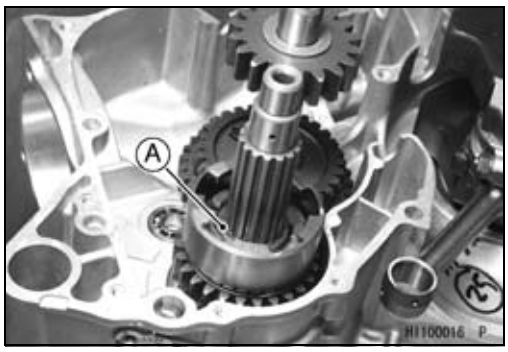

- Apply engine oil:
  Shift Rod [A] and Shift Fork Ear [B]
  Needle Bearing [C]
- Install:
  Shift Rod with Shift Fork
  Spacer [D]
  Needle Bearing

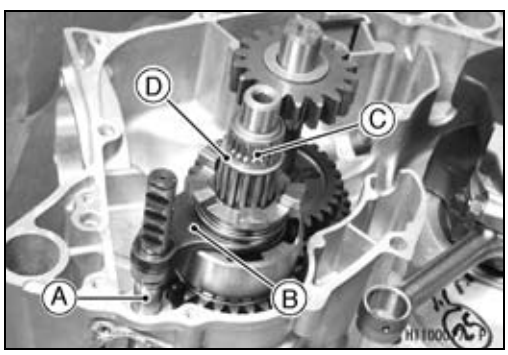

- Install:
  Reverse Drive Gear [A]
  Spacer [B]

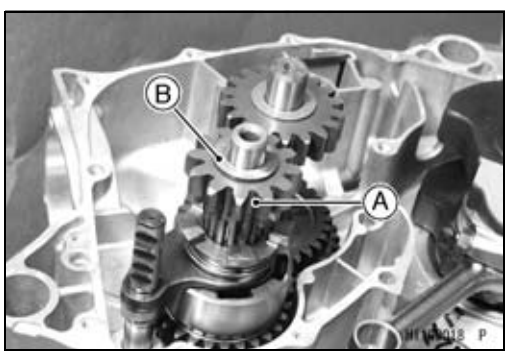

- Install:
  Reverse Idle Shaft [A]

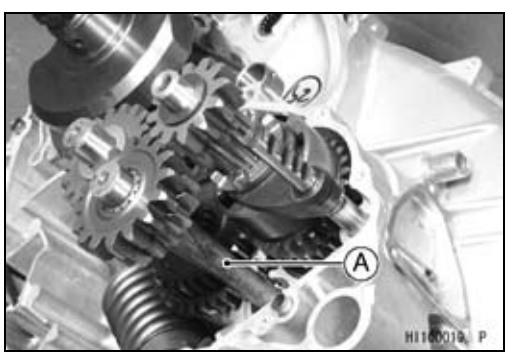

Transmission

- Apply molybdenum disulfide oil to the shift shaft [A].
- Install:
  Shift Shaft Spring Bolt [B]
  Spring [C]
  Guide [D]
- Apply a non-permanent locking agent:
  Shift Shaft Spring Bolt
- Tighten:

  Torque - Shift Shaft Spring Bolt: 25 N·m (2.5 kgf·m, 18 ft·lb)

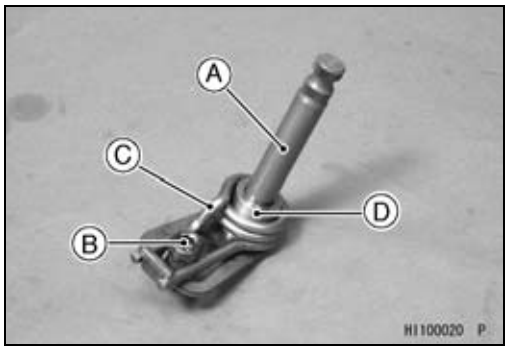

- When an oil seal [A] is installed in the shift shaft cover [B], press and insert the oil seal so that its surface is flush with the end of the hole.

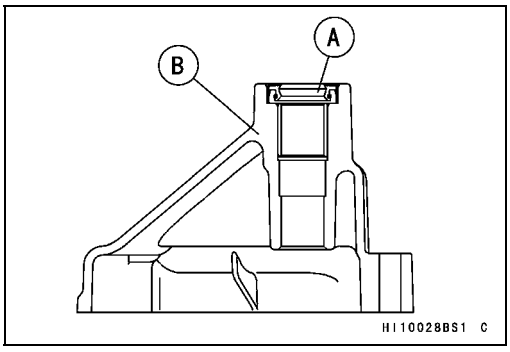

- Install:
  Shift Shaft Cover
- Tighten:

  Torque - Shift Shaft Cover Bolts: 8.8 N·m (0.90 kgf·m, 78 in·lb)

Shift Fork Bending Inspection

- Visually inspect the shift fork.

★If the fork is bent, replace the shift rod with a new one. A bent fork could cause difficulty in shifting, or allow the transmission to jump out of gear when under power.
  [A] 90°

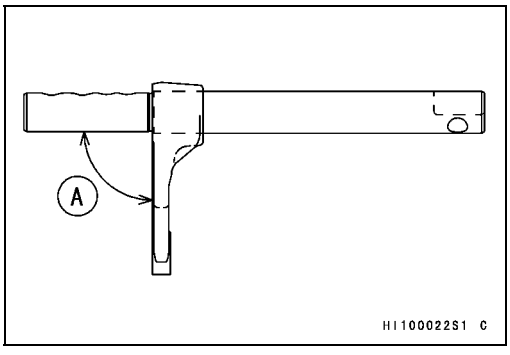

Shift Fork/Gear and Shifter Groove Wear Inspection

- Measure the thickness of the shift fork ears [A], and measure the width [B] of the shifter groove.

★If the thickness of a shift fork ear is less than the service limit, the shift rod must be replaced.

Shift Fork Ear Thickness
Standard: 5.9 ~ 6.0 mm (0.2322 ~ 0.2362 in.)
Service Limit: 5.8 mm (0.228 in.)

★If the groove is worn over the service limit, the shifter must be replaced.

Shifter Groove Width
Standard: 6.05 ~ 6.15 mm (0.2382 ~ 0.2421 in.)
Service Limit: 6.25 mm (0.2460 in.)

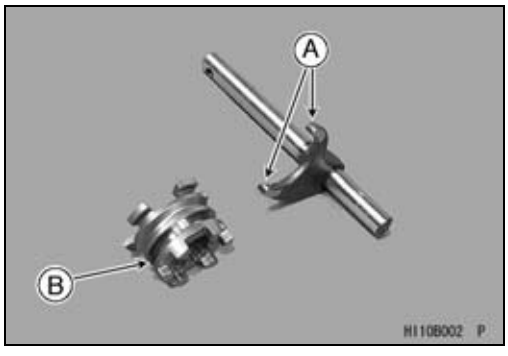

Transmission

Transmission and Shift Mechanism Inspection

- Visually inspect:
  Gears
  Dogs of Gear and Shifter

★If they are damaged or worn excessively, replace them.

Transmission

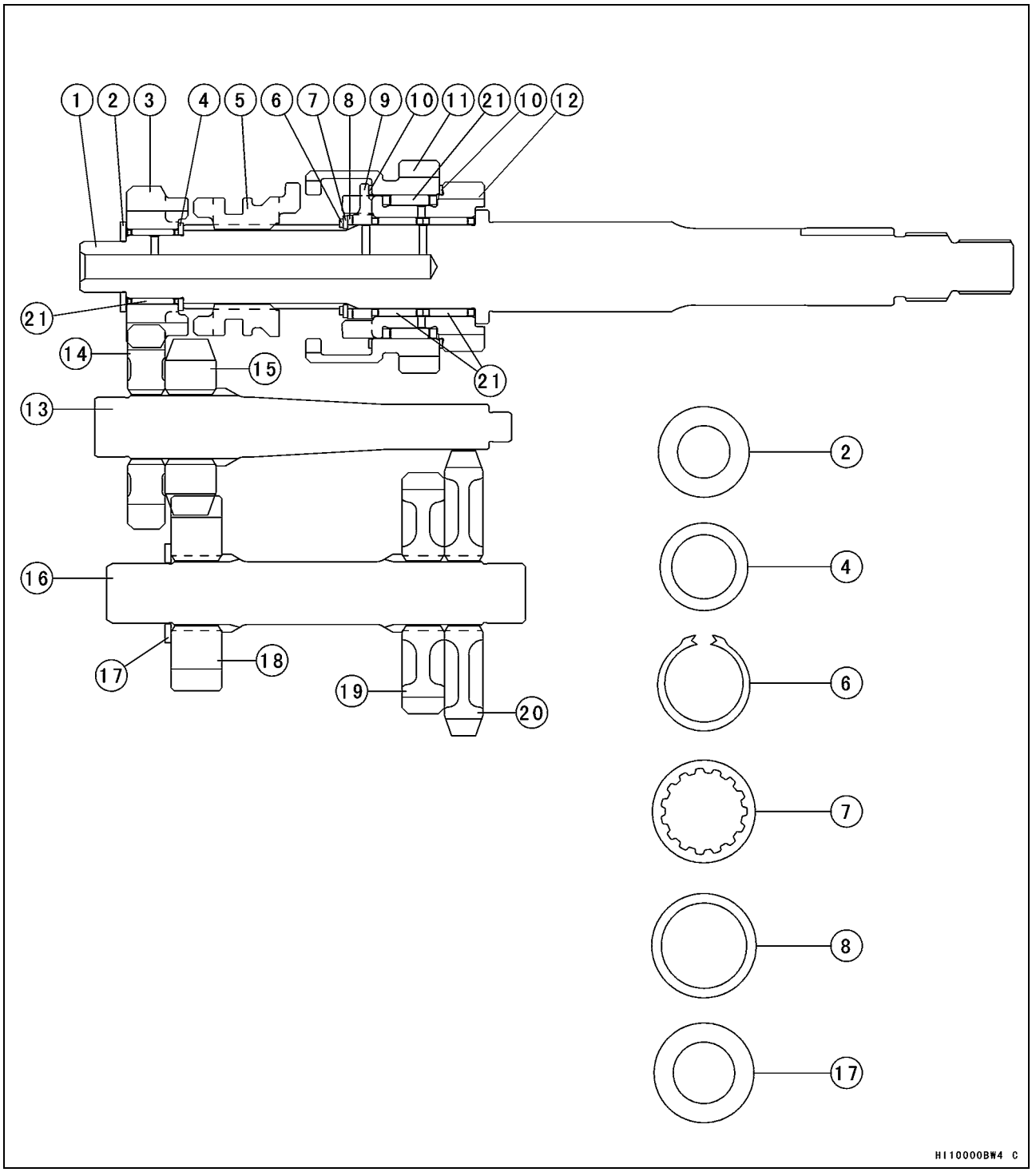

1. Driven Shaft
2. Spacer (17.3 × 30 × 2.0)
3. Reverse Gear (12T)
4. Spacer (21.2 × 29 × 1.6)
5. Shifter
6. Snap Ring
7. Washer T = 1.5
8. Spacer (28.2 × 34.5 × 1.6)
9. Spacer (Hi and Low)
10. Spacer (48.2 × 54.3 × 1.0)
11. Drive Hi Gear (26T)
12. Drive Low Gear (20T)
13. Reverse Idle Shaft
14. Reverse Driven Gear (16T)
15. Reverse Driven Output Gear (16T)
16. Idle Shaft
17. Spacer (20.3 × 33 × 2.0)
18. Driven Output Gear (18T)
19. Driven Hi Gear (30T)
20. Driven Low Gear (36T)
21. Needle Bearing

Ball Bearing, Needle Bearing, and Oil Seal

Ball and Needle Bearing Replacement

CAUTION

Do not remove the ball or needle bearings unless it is necessary. Removal may damage them.

- Using a press or puller, remove the ball bearing and/or three needle bearings.

NOTE

○*In the absence of the above mentioned tools, satisfactory results may be obtained by heating the case to approximately 93°C (200°F) max., and tapping the bearing in or out.*

CAUTION

Do not heat the case with a torch. This will warp the case. Soak the case in oil and heat the oil.

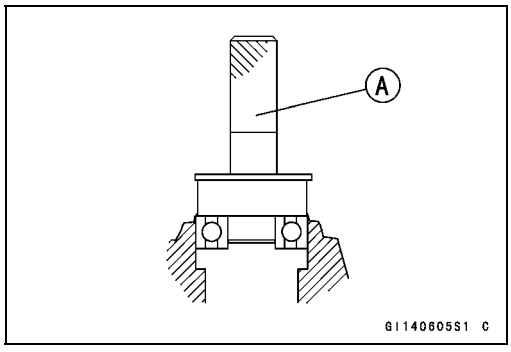

- Using a press and the bearing driver set [A], install the new ball bearing until it stops at the bottom of its housing.

○Three new needle bearings must be pressed into the crankcase so that the end is flush with the end of the hole.

Special Tool - Bearing Driver Set: 57001-1129

Ball and Needle Bearing Wear Inspection

CAUTION

Do not remove the bearings for inspection. Removal may damage them.

- Check the ball bearings.

○Since the ball bearings are made to extremely close tolerances, the wear must be judged by feel rather than measurement. Clean each bearing in a high-flash point solvent, dry it (do not spin the bearing while it is dry), and oil it with engine oil.

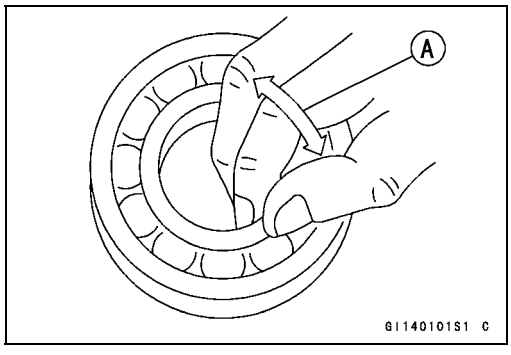

○Spin [A] the bearing by hand to check its condition.

★If the bearing is noisy, does not spin smoothly, or has any rough spots, replace it.

- Check the needle bearings.

○The rollers in a needle bearing normally wear very little, and wear is difficult to measure. Instead of measuring, inspect the bearing for abrasion, color change, or other damage.

★If there is any doubt as to the condition of a needle bearing, replace it.

Oil Seal Inspection

- Inspect the oil seals.

★Replace it if the lips are misshapen, discolored (indicating that the rubber has deteriorated), hardened or otherwise damaged.

Wheels/Tires

Table of Contents

Exploded View

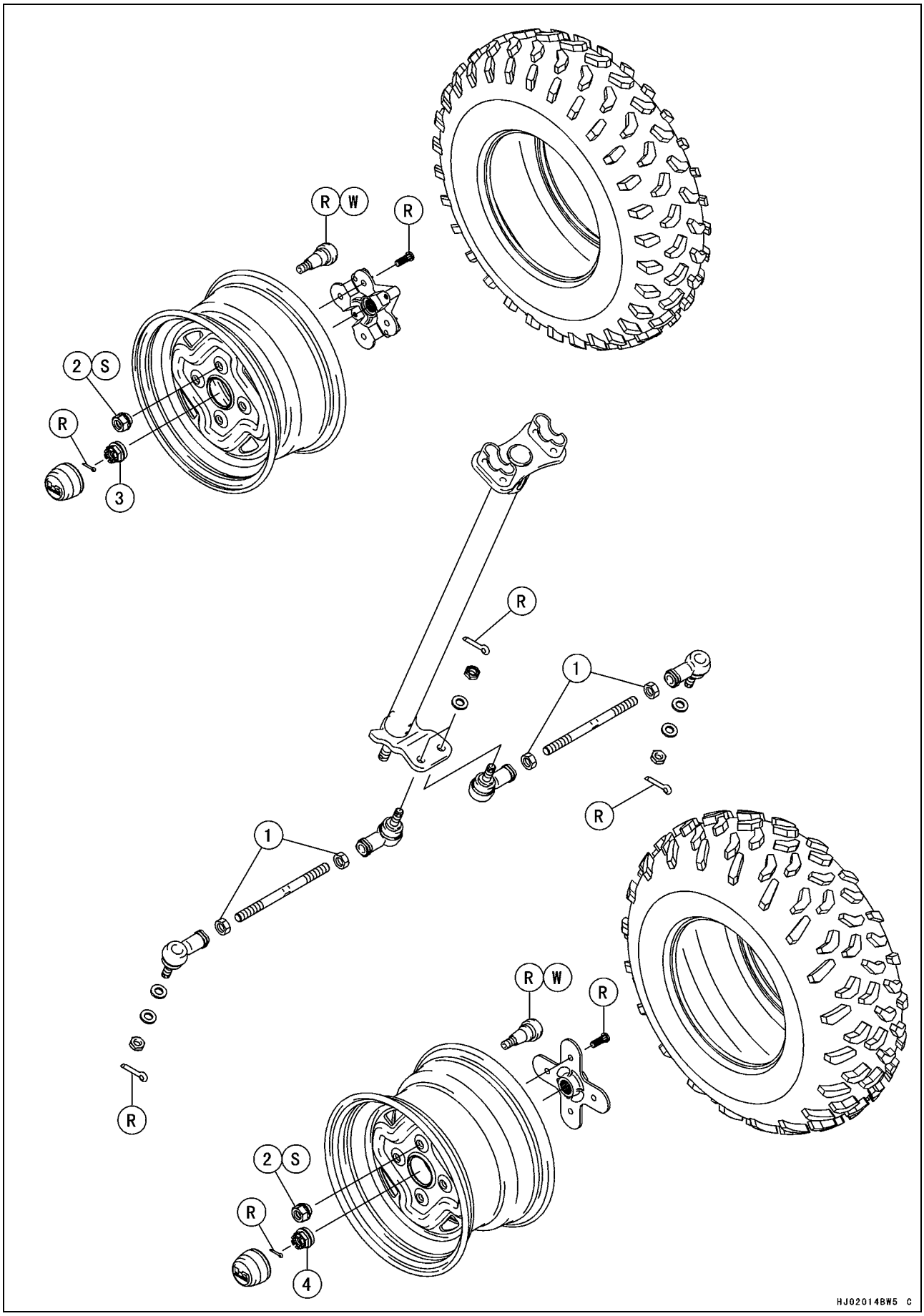

Exploded View

No.	Fastener	Torque			Remarks
		N·m	kgf·m	ft·lb	
1	Tie-rod Locknuts	37	3.8	27	
2	Wheel Nuts (First Torque)	15	1.5	11	S
2	Wheel Nuts (Final Torque)	76	7.8	56	S
3	Front Axle Nuts	197	20	145	
4	Rear Axle Nuts	265	27	195	

R: Replacement Parts
S: Follow the specific tightening sequence.
W: Apply water or soap and water solution.

Specifications

Item	Standard	Service Limit
Wheel Alignment		
Toe-in of front wheels:	–10 ~ 10 mm (–39 ~ 0.39 in.) at 1G	– – –
Wheels (Rims)		
Rim Size:		
Front	12 × 6.0	– – –
Rear	12 × 7.5	– – –
Tires		
Standard tire:		
Front	AT 25 × 8-12 DUNLOP, KT191, Tubeless	– – –
Rear	AT 25 × 10-12 DUNLOP, KT195, Tubeless	– – –
Tire air pressure (when cold):		
Front	35 kPa (0.35 kgf/cm², 5.0 psi)	– – –
Rear	35 kPa (0.35 kgf/cm², 5.0 psi)	– – –
Maximum tire air pressure (to seat beads, when cold)	250 kPa (2.5 kgf/cm², 36 psi)	– – –
Tire tread depth:		
Front	13.0 mm (0.51 in.)	3 mm (0.12 in.)
Rear	14.5 mm (0.57 in.)	4 mm (0.16 in.)

Special Tool

Jack:
57001-1238

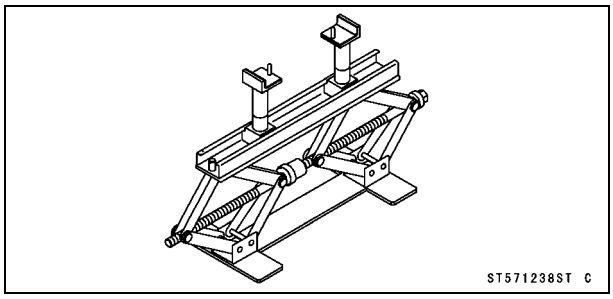

Wheel Alignment

Toe-in is the difference between the distance of front and the one of rear at the axle height position in the front wheels. When there is toe-in, the distance A (Rear) is the greater than B (Front) as shown.

The purpose of toe-in is to prevent the front wheels from getting out of parallel at any time, and to prevent any slipping or scuffing action between the tires and the ground. If toe-in is incorrect, the front wheels will be dragged along the ground, scuffing and wearing the tread knobs.

Caster and camber are build-in and require no adjustment.

A (Rear) – B (Front) = Amount of Toe-in
(Distance A and B are measured at axle height with the vehicle sitting on the ground, or at 1G.)

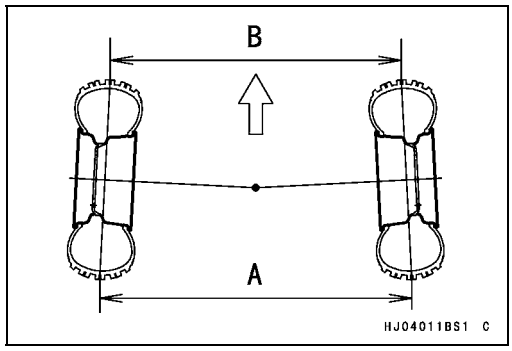

Steering Centering Inspection

- Test ride the vehicle.

★If the handlebar is straight when the vehicle is traveling in a straight line, go on to the Toe-in Inspection procedure.

★Otherwise, go on to the Steering Centering Adjustment procedure.

Steering Centering Adjustment

- Hold a straightedge [A] against the rear wheel rim on one side at axle height.

- With the handlebar straight ahead, loosen the locknuts [A] [B] and turn the tie-rod [C] until the front wheel on that side is parallel to the straightedge.

NOTE

○*The locknut [B] near the L mark [D] on the tie-rod has left-hand threads. Turn the wrench clockwise for loosening.*

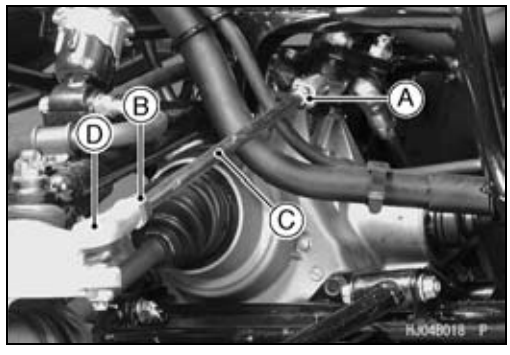

CAUTION

Adjust the tie-rod so that the visible thread length [A] is even on both ends of the tie-rod, or the threads could be damaged.

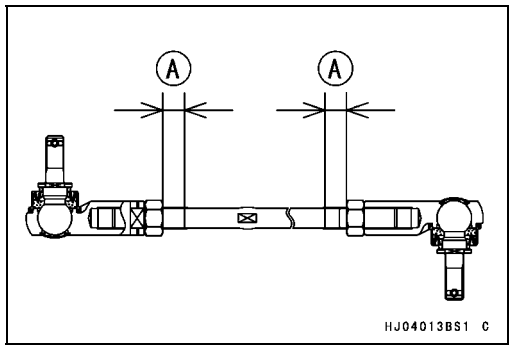

Wheel Alignment

- Repeat the straightedge procedure on the other side of the vehicle. Now the front wheels are parallel to each other and to the center line of the vehicle.
  Front Wheel [A]
  Vehicle Center Line [B]
  Parallel each other [C]
  Straightedges [D]
  Rear Wheels [E]
- Go on to the Toe-in Inspection procedure.

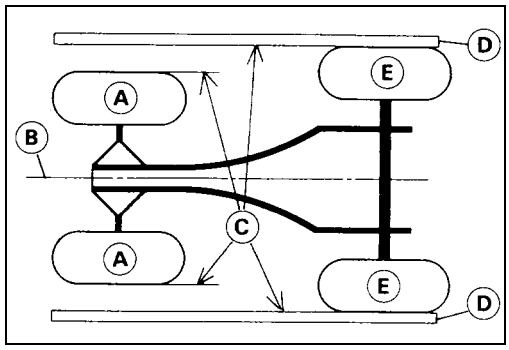

Toe-in Inspection

- Apply a heavy coat of chalk or a paint line near the center of the front tires.
- Using a needle nose scriber, make a thin mark near the center of the chalk coating while turning the wheel.

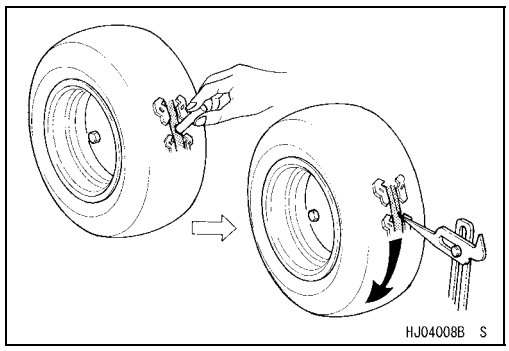

- With the front wheels on the ground, set the handlebar straight ahead.
- At the level of the axle height, measure the distance between the scribed or painted lines for both front and rear of the front tires.
- Subtract the measurement of the front from the measurement of the rear to get the toe-in.

★If the toe-in is not in the specified range, go on to the Toe-in Adjustment procedure.

Toe-in of Front Wheels
Standard: –10 ~ 10 mm (–0.39 ~ 0.39 in.) at 1G

Toe-in Adjustment

- Loosen the locknuts [A] [B] and turn the tie-rod [C] the same number of turns on both sides to achieve the specified toe-in.

NOTE

○*The locknut [B] near the L mark [D] on the tie-rod has left-hand threads. Turn the locknut clockwise for loosening.*

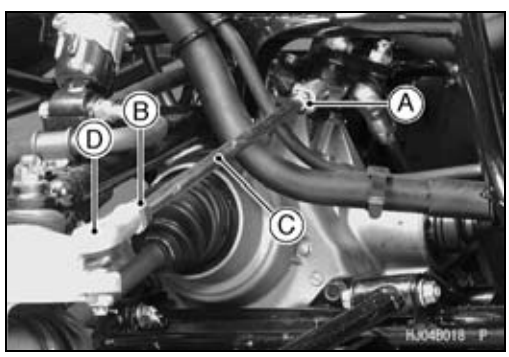

Wheel Alignment

NOTE

○*The toe-in will be near the specified value, if the tie-rod length [A] is 393.3 mm (15.48 in.) on each tie-rod.*

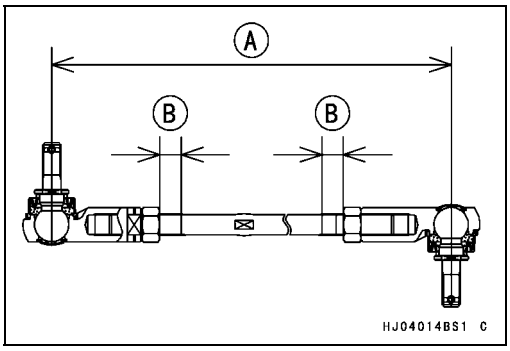

CAUTION

Adjust the tie-rod length so that the visible thread length [B] is even on both ends of the tie-rod. Uneven thread length could cause tie-rod damage.

- Check the toe-in.
- Tighten:

  Torque - Tie-rod Locknuts: 37 N·m (3.8 kgf·m, 27 ft·lb)
- Test ride the vehicle.

Wheels (Rims)

Wheel Removal

- Loosen the wheel nuts [A].
- Support the vehicle on a stand or a jack so that the wheels are off the ground.

  Special Tool - Jack: 57001-1238
- Remove:
  Wheel Nuts
  Wheel

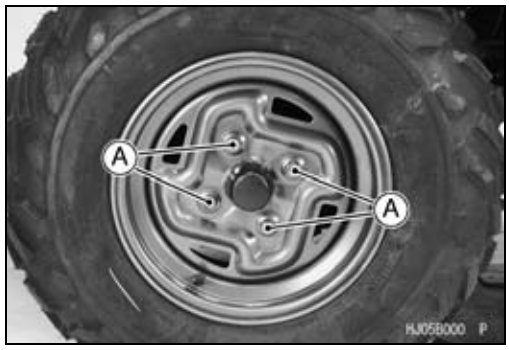

Wheel Installation

- Check the tire rotation mark [A] on the tire, and install the wheel accordingly.

NOTE

○*The direction of the tire rotation [B] is shown by an arrow on the tire sidewall.*

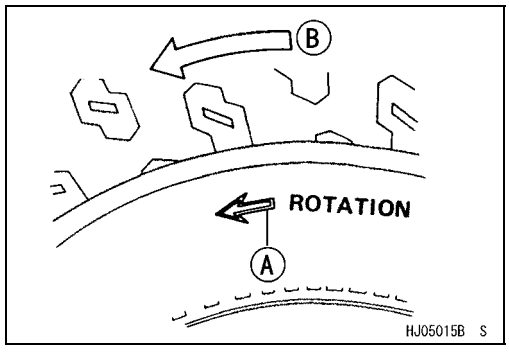

- Position the wheel so that the air valve [A] is toward the outside of the vehicle.
- Wipe dry the taper surface of the rim.
- Wipe dry the threads and the taper surface of the nuts.
- First tighten the wheel nuts in a criss-cross pattern.

  First Torque - Wheel Nuts: 15 N·m (1.5 kgf·m, 11 ft·lb)
- Finally tighten the wheel nuts in a criss-cross pattern.

  Final Torque - Wheel Nuts: 76 N·m (7.8 kgf·m, 56 ft·lb)

NOTE

○*The nuts are the self-locking type and must be replaced when they are worn and can be turned by hand after repeated removing and installing.*

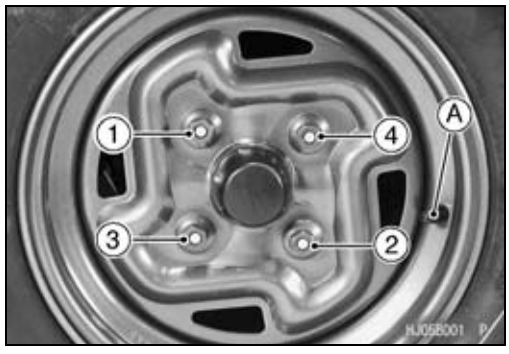

Wheel (Rim) Inspection

- Examine both sides of the rim for dents [A]. If the rim is dented, replace it.

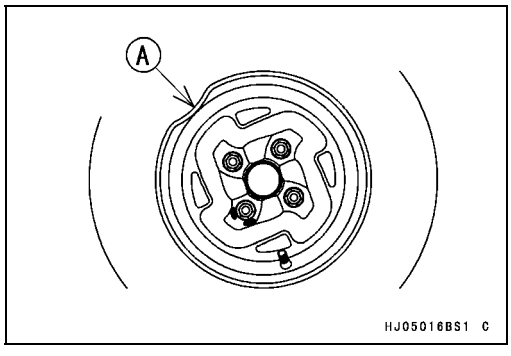

Wheels (Rims)

★If the tire is removed, inspect the air sealing surfaces [A] of the rim for scratches or nicks. Smooth the sealing surfaces with fine emery cloth if necessary.

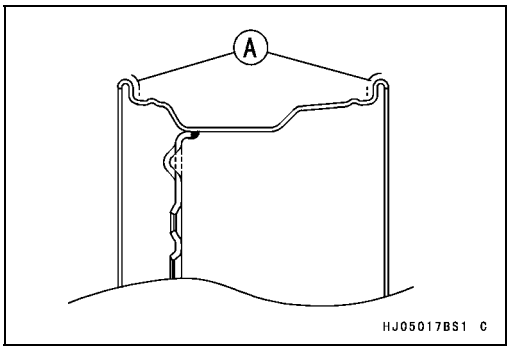

Wheel (Rim) Replacement

- Remove the wheel (see Wheel Removal).
- Disassemble the tire from the rim (see Tire Removal).

○Remove the air valve and discard it.

CAUTION
Replace the air valve whenever the tire is replaced. Do not reuse the air valve.

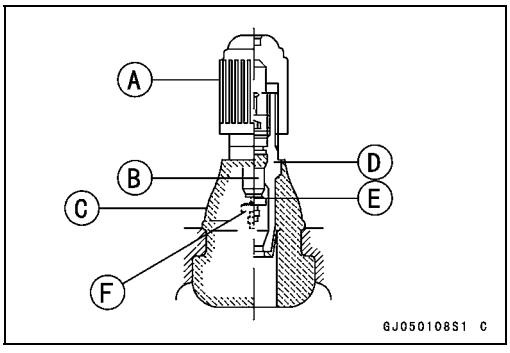

Plastic Cap [A]
Valve Core [B]
Stem Seal [C]
Valve Stem [D]
Valve Seat [E]
Valve Opened [F]

- Install a new air valve in the new rim.

○Remove the valve cap, lubricate the stem with a soap and water solution, and pull the stem [A] through the rim from the inside out until it snaps into place.

CAUTION
Do not use engine oil or petroleum distillates to lubricate the stem because they will deteriorate the rubber.

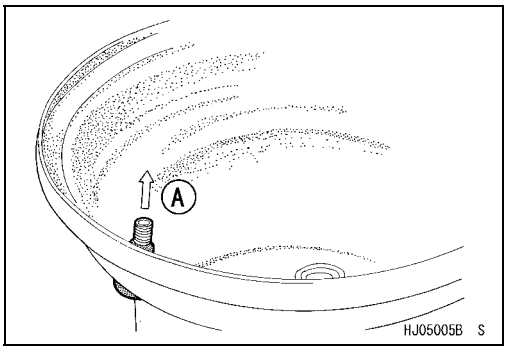

- Mount the tire on the new rim (see Tire Installation).
- Install the wheel (see Wheel Installation).
- Install the air valve cap.

Tires

Tire Removal

- Remove the wheel.
- Unscrew the valve core to deflate the tire.

○Use a proper valve core tool [A].

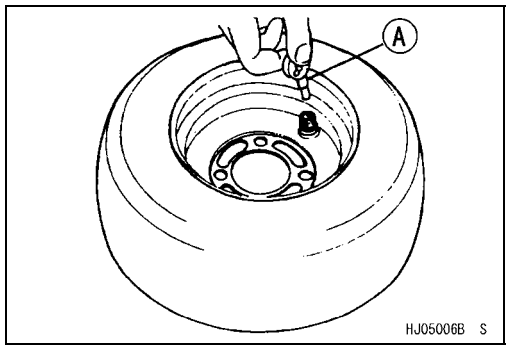

- Lubricate the tire beads and rim flanges on both sides of the wheel with a soap and water solution, or water [A]. This helps the tire beads slip off the rim flanges.

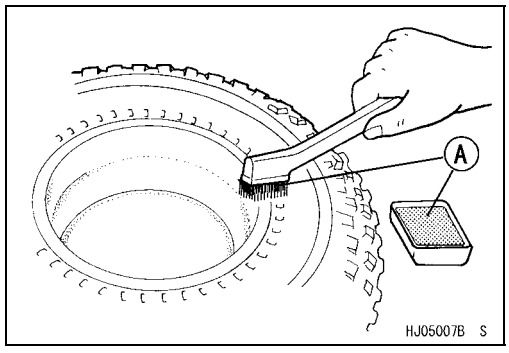

CAUTION

Do not lubricate the tire beads and rim flanges with engine oil or petroleum distillates because they will deteriorate the tire.

- Remove the tire from the rim using a suitable commercially available tire changer.

NOTE

○*The tires cannot be removed with hand tools because they fit the rims tightly.*

Tire Installation

- Inspect the rim (see Wheel (Rim) Inspection).
- Replace the air valve with a new one.

CAUTION

Replace the air valve with whenever the tire is replaced. Do not reuse the air valve.

- Check the tire for wear and damage (see Tire Inspection in the Periodic Maintenance chapter).
- Lubricate the tire beads and rim flanges with a soap and water solution, or water.

⚠ WARNING

Do not use the lubricant other than a water and soap solution, or water to lubricate the tire beads and rim because it may cause tire separation.

- Check the tire rotation mark [A] on the tire, and install the tire on the rim accordingly.

○The tires should be installed on the rims so that each air valve is toward the outside of the vehicle.

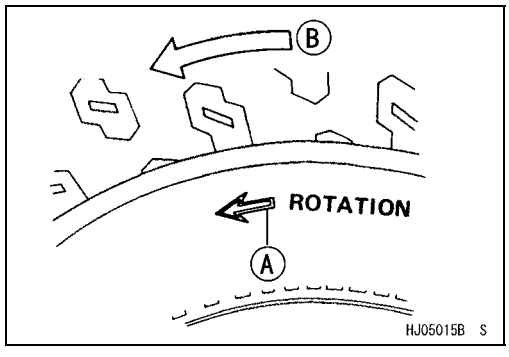

NOTE

○*The direction of the tire rotation [B] is shown by an arrow on the tire sidewall.*

- Install the tire on the rim using a suitable commercially available tire changer.
- Lubricate the tire beads again and center the tire on the rim.

Tires

- Support the wheel rim [A] on a suitable stand [B] to prevent the tire from slipping off.
- Inflate the tire until the tire beads seat on the rim.

Maximum Tire Air Pressure (to seat beads when cold)
Front and Rear 250 kPa (2.5 kgf/cm², 36 psi)

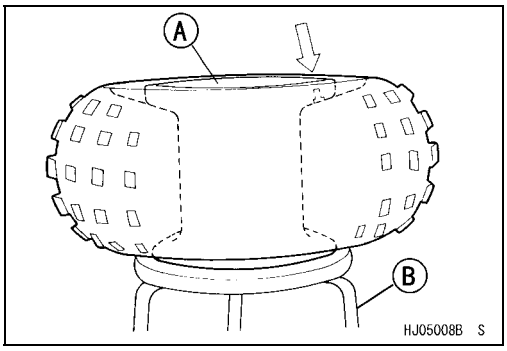

⚠ WARNING

Do not inflate the tire to more than the maximum tire air pressure. Overinflation can explode the tire with possibility of injury and loss of life.

- Check to see that rim lines [A] on both sides of the tire are parallel with the rim flanges [B].

★If the rim lines and the rim flanges are not parallel, deflate the tire, lubricate the sealing surfaces again, and reinflate the tire.

- After the beads are properly seated, check for air leaks.

○Apply a soap and water solution around the tire bead and check for bubbles.

- Deflate the tire to the specified pressure.
- Check the tire pressure using an air pressure gauge.

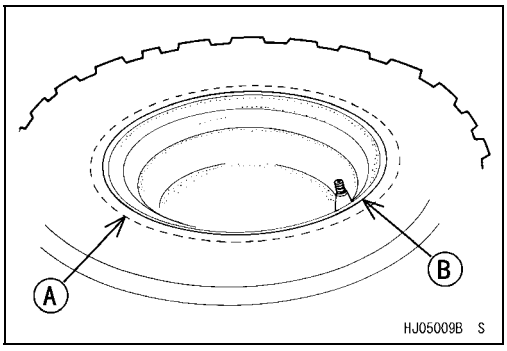

NOTE

○*Kawasaki provides the air pressure gauge (P/N 52005 -1082) with the owner's tool kit.*

Tire Air Pressure (when cold)
Front 35 kPa (0.35 kgf/cm², 5.0 psi)
Rear 35 kPa (0.35 kgf/cm², 5.0 psi)

- Install the air valve cap.
- Install the wheel (see Wheel Installation).
- Wipe off the soap and water solution on the tire and dry the tire before operation.

⚠ WARNING

Do not operate the vehicle with the water and soap still around the tire beads. They will cause tire separation, and a hazardous condition may result.

Tire Inspection

- Refer to the Tire Inspection in the Periodic Maintenance chapter.

Front Hub

Front Hub Removal

- Remove:
  Cap [A]
  Cotter Pin [B] (cut)
- Loosen the axle nut [C].

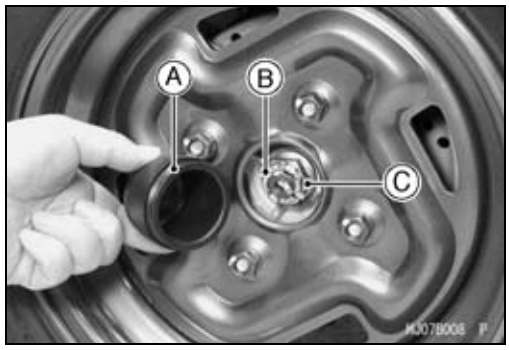

- Remove the wheel (see Wheel Removal).
- Remove the caliper by taking off the mounting bolts, and let the caliper hang free.
- Remove the axle nut [A] and pull off the front hub [B] and brake disc.
- Separate the brake disc from the front hub.

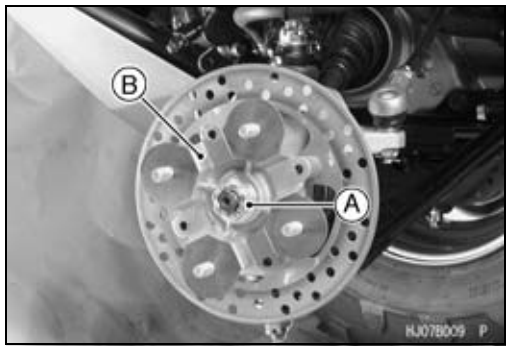

Front Hub Installation

- Install the front brake disc (see Front Brake Disc Installation in the Brakes chapter).
- Wipe dry the spline portion of the hub.
- Wipe dry the threads and seating surface of the nuts.
- Tighten:

Torque - Front Axle Nuts: 197 N·m (20 kgf·m, 145 ft·lb)

- Insert a new cotter pin [A].

NOTE

○*When inserting the cotter pin, if the slots in the nut do not align with the cotter pin hole in the axle shaft, tighten the nut clockwise [B] up to next alignment.*
○*It should be within 30 degree.*
○*Loosen once and tighten again when the slot goes past the nearest hole.*

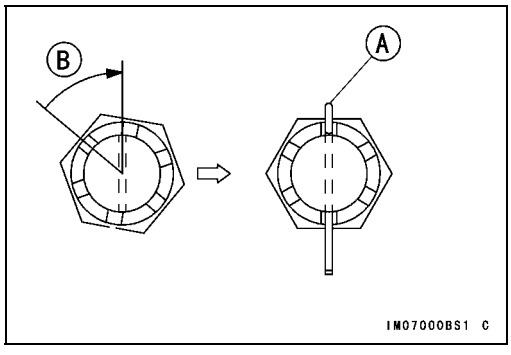

- Bend the cotter pin [A] over the nut.

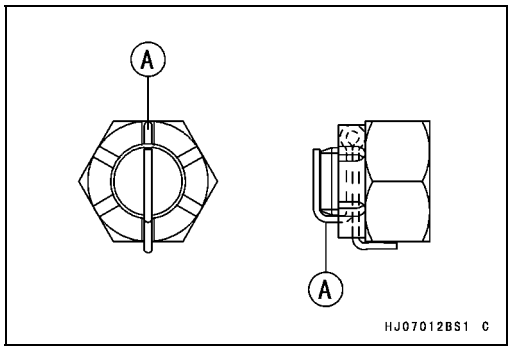

Front Hub

Front Hub Disassembly/Assembly

★If any hub bolt [A] is damaged, replace the hub [B] and bolts as a unit.

- Remove the hub bolt from the hub using a press.
- Press the hub bolt using a press.

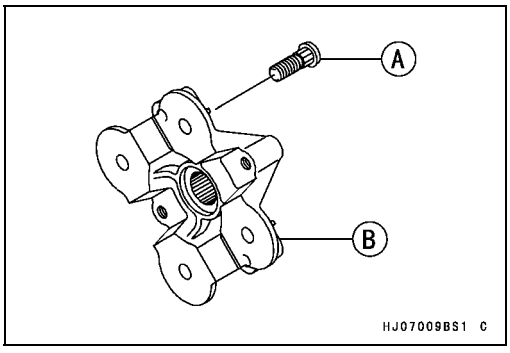

Rear Hub

Rear Hub Removal

- Remove:
  Cap [A]
  Cotter Pin [B]
- Loosen the axle nut [C].

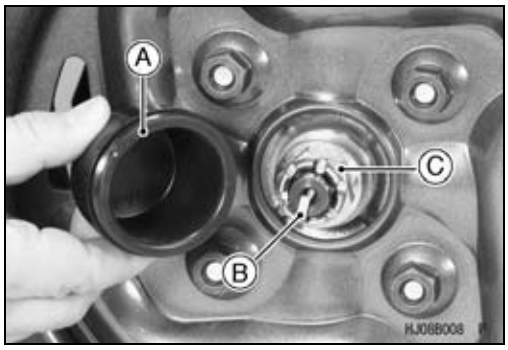

- Remove:
  Wheel (see Wheel Removal)
  Axle Nut [A]
  Rear Hub [B]

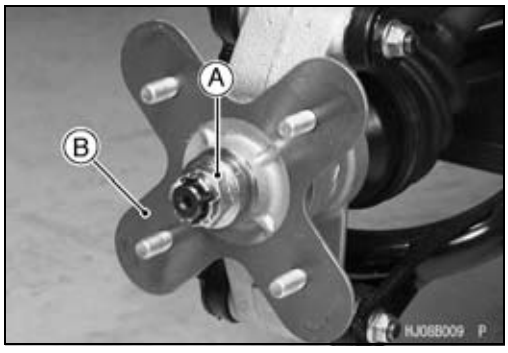

Rear Hub Installation

- Wipe dry the spline portion of the hub.
- Wipe dry the threads and seating surface of the nuts.
- Tighten:

Torque - Rear Axle Nuts: 265 N·m (27 kgf·m, 195 ft·lb)

- Insert a new cotter pin [A].

NOTE

○*When inserting the cotter pin, if the slots in the nut do not align with the cotter pin hole in the axle shaft, tighten the nut clockwise [B] up to next alignment.*
○*It should be within 30 degree.*
○*Loosen once and tighten again when the slot goes past the nearest hole.*

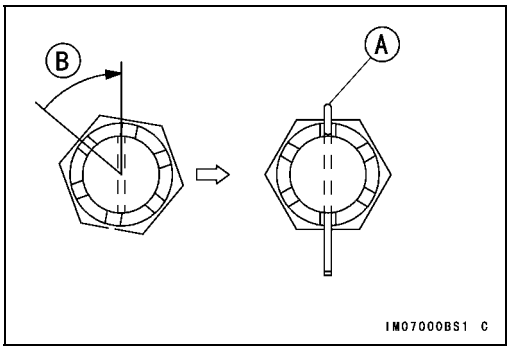

- Bend the cotter pin [A] over the nut.

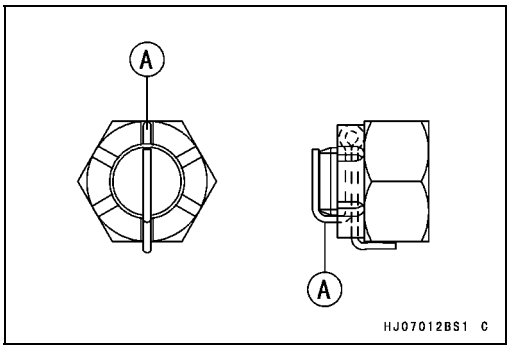

Rear Hub

Rear Hub Disassembly/Assembly

★If any hub bolt [A] is damaged, replace the hub [B] and bolts as a unit.

- Remove the hub bolt from the hub using a press.
- Press the hub bolt using a press.

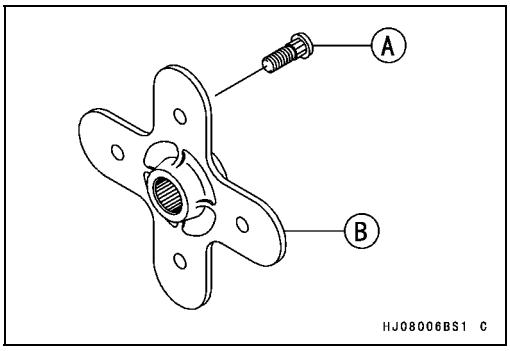

Final Drive

Table of Contents

Exploded View

Dummy Page

Exploded View

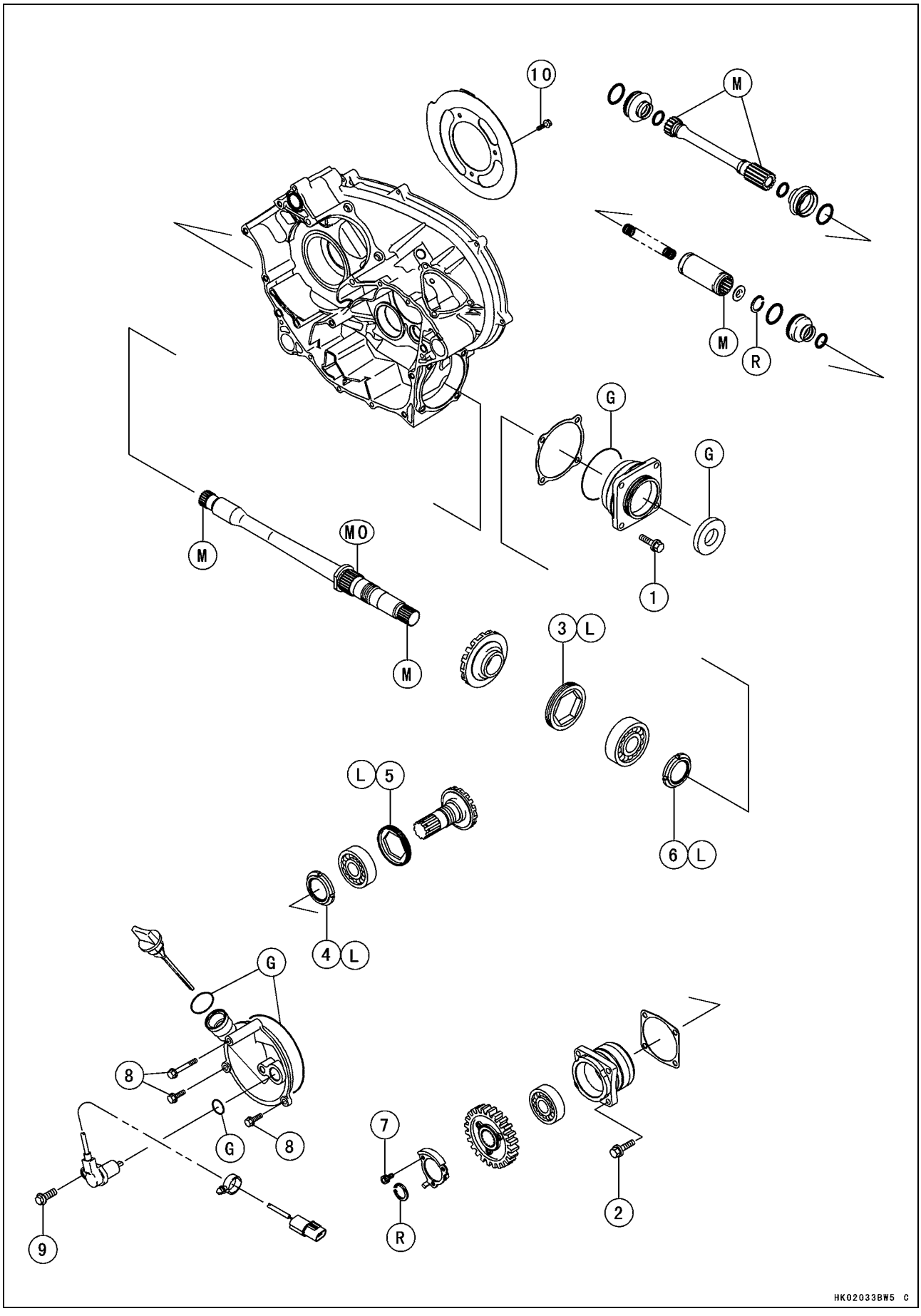

Exploded View

No.	Fastener	Torque			Remarks
		N·m	kgf·m	ft·lb	
1	Output Driven Bevel Gear Housing Bolts	26	2.7	20	
2	Output Drive Bevel Gear Housing Bolts	26	2.7	20	
3	Bearing Holder	137	14	101	L
4	Bevel Gear Holder Nut	157	16	116	L
5	Bearing Holder	118	12	87	L
6	Output Shaft Holder Nut	157	16	116	L
7	Rotor Mounting Bolts	12	1.2	104 in·lb	
8	Output Drive Bevel Gear Cover Bolts	8.8	0.90	78 in·lb	
9	Forward/Reverse Detecting Sensor Mounting Bolt	15	1.5	11	
10	Belt Converter Cover Plate Bolts	8.8	0.90	78 in·lb	

G: Apply grease.
L: Apply a non-permanent locking agent.
M: Apply molybdenum disulfide grease.
MO: Apply molybdenum disulfide oil (mixture of the engine oil and molybdenum disulfide grease in a weight ratio: 10 : 1).
R: Replacement Parts

Exploded View

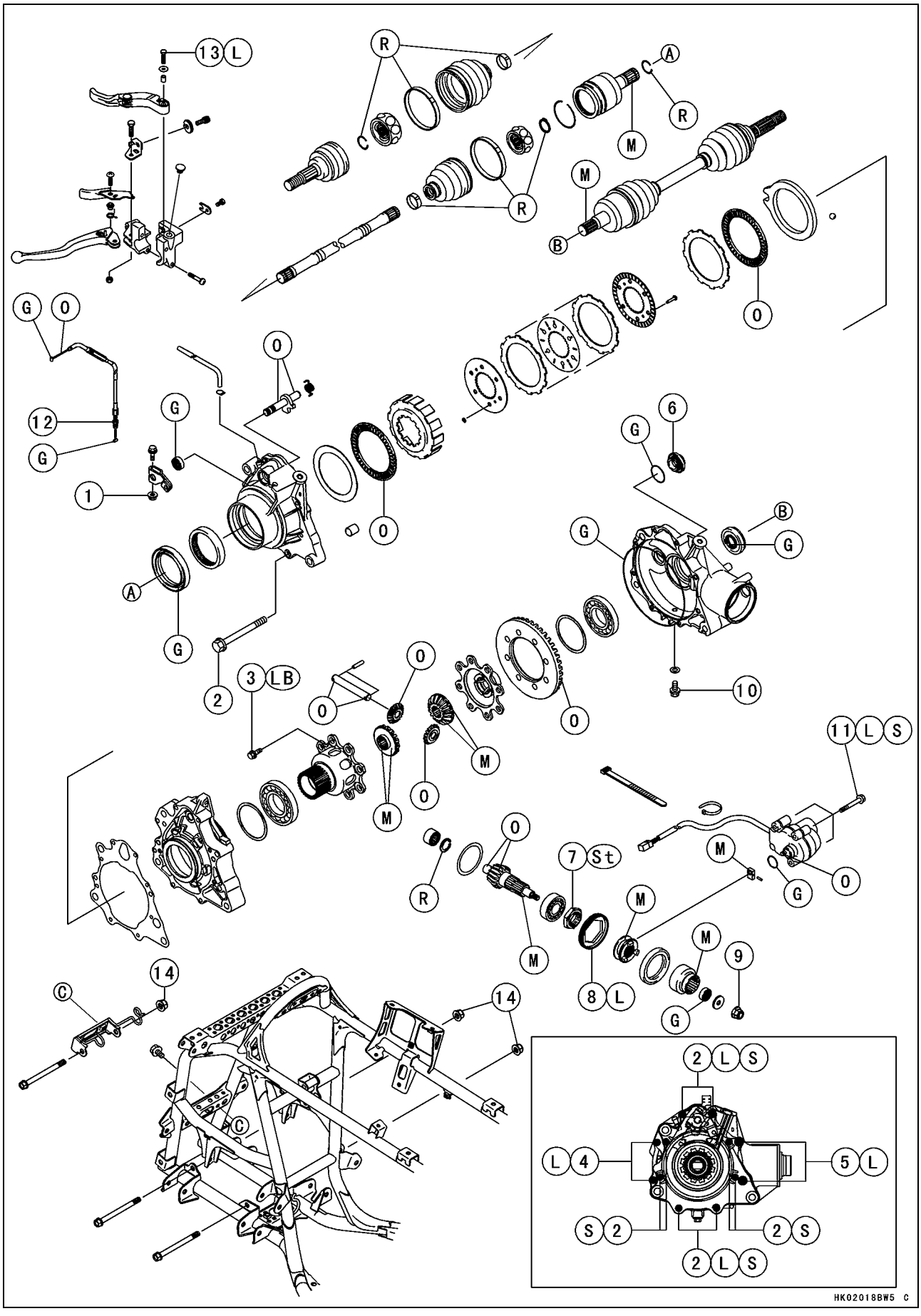

Exploded View

No.	Fastener	Torque			Remarks
		N·m	kgf·m	ft·lb	
1	Variable Differential Control Shift Shaft Lever Bolt	8.8	0.90	78 in·lb	
2	Front Final Gear Case Left Cover Bolts (M6)	9.8	1.0	87 in·lb	L (4), S
3	Ring Gear Bolts	57	5.8	42	LB
4	Front Final Gear Case Center Cover Bolts (M6)	9.8	1.0	87 in·lb	L
5	Front Final Gear Case Center Cover Bolts (M8)	24	2.4	17	L
6	Front Final Gear Case Oil Filler Cap	29	3.0	22	
7	Pinion Gear Bearing Holder Nut	127	13	94	St
8	Pinion Gear Bearing Holder	137	14	101	L
9	Front Final Gear Case Coupling Nut	25	2.5	18	
10	Front Final Gear Case Oil Drain Plug	15	1.5	11	
11	2WD/4WD Actuator Mounting Bolts	9.8	1.0	87 in·lb	L, S
12	Variable Differential Control Cable Locknut	17	1.7	12	
13	Variable Differential Control Lever Bolt	–	–	–	L
14	Front Final Gear Case Nuts	59	6.0	43	

G: Apply grease.
L: Apply a non-permanent locking agent.
LB: Apply a non-permanent locking agent (Three Bond TB2471 Blue).
M: Apply molybdenum disulfide grease.
O: Apply engine oil.
R: Replacement Parts
S: Follow the specific tightening sequence.
St: Stake the fasteners to prevent loosening.

Exploded View

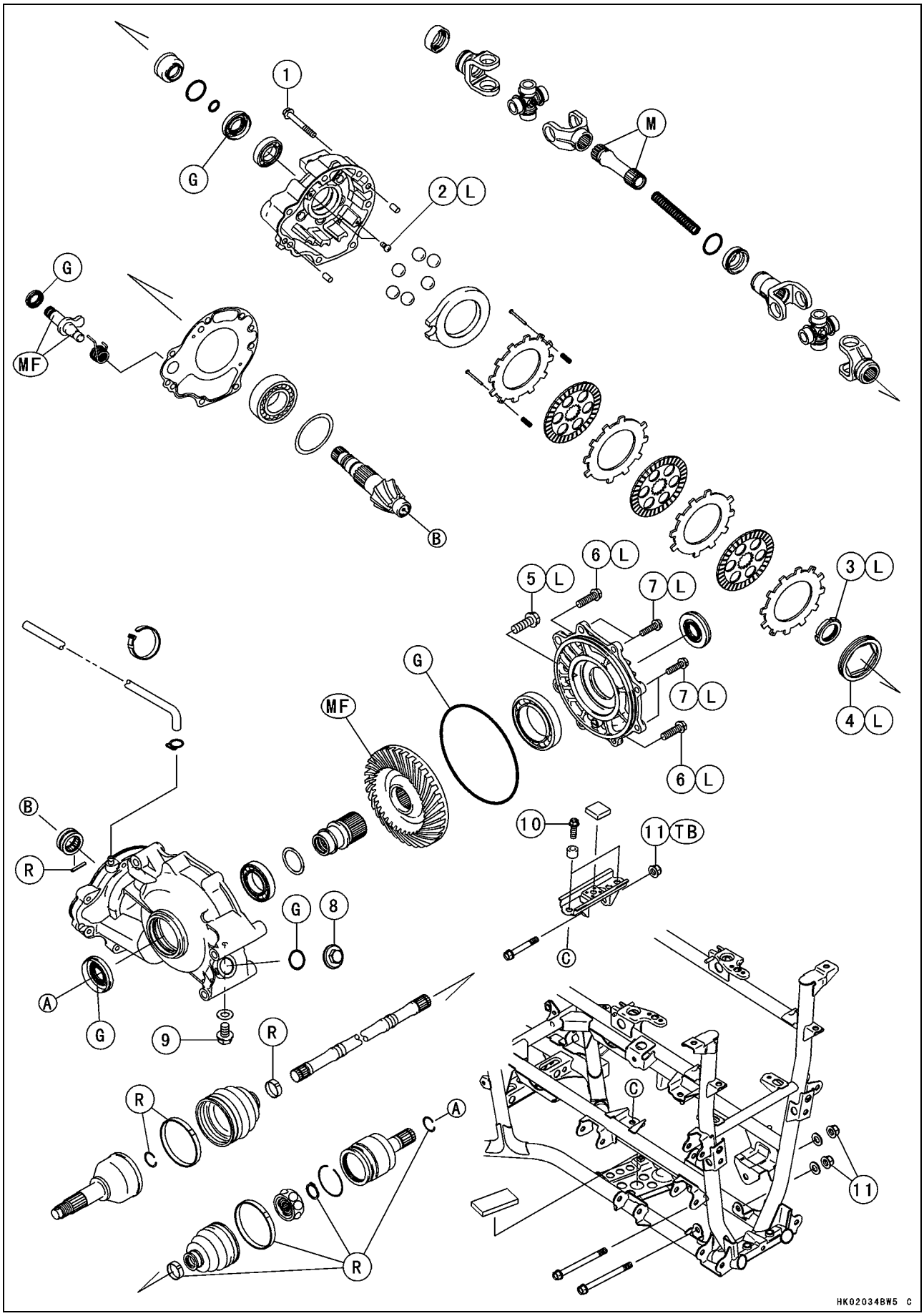

Exploded View

No.	Fastener	Torque			Remarks
		N·m	kgf·m	ft·lb	
1	Rear Final Gear Case Front Cover Bolts	24	2.4	17	
2	Rear Final Gear Case Gasket Screws	1.3	0.13	12 in·lb	L
3	Pinion Gear Bearing Holder Nut	157	16	116	L
4	Pinion Gear Bearing Holder	137	14	101	L
5	Rear Final Gear Case Right Cover Bolts (M12)	93	9.5	69	L
6	Rear Final Gear Case Right Cover Bolts (M10)	49	5.0	36	L
7	Rear Final Gear Case Right Cover Bolts (M8)	24	2.4	17	L
8	Rear Final Gear Case Oil Filler Cap	29	3.0	22	
9	Rear Final Gear Case Oil Drain Plug	15	1.5	11	
10	Rear Final Gear Case Bracket Bolts	59	6.0	43	
11	Rear Final Gear Case Nuts	91	9.3	67	

G: Apply grease.
L: Apply a non-permanent locking agent.
M: Apply molybdenum disulfide grease.
MF: Apply gear oil (MOBIL FLUID 424) or equivalent oil.
R: Replacement Parts
S: Follow the specific tightening sequence.

Specifications

Item	Standard	Service Limit
Output Bevel Gear Case		
Output Bevel Gear Backlash	0.05 ~ 0.11 mm (0.0020 ~ 0.0043 in.) (at output drive shaft spline)	– – –
Front Final Gear Case		
Gear Case Oil (same engine oil):		
Type	API SF or SG	– – –
	API SH, SJ or SL with JASO MA	– – –
Viscosity	SAE 10W-40	– – –
Oil Level	Filler opening bottom	– – –
Capacity	0.40 L (0.42 US qt)	– – –
Coupling Bushing Inside Diameter	13.000 ~ 13.018 mm (0.5118 ~ 0.5125 in.)	13.048 mm (0.5137 in.)
LSD Clutch Torque:		
(when variable differential control lever is released.)	15 ~ 20 N·m (1.5 ~ 2.0 kgf·m, 11 ~ 14 ft·lb)	– – –
(when variable differential control lever is pulled in.)	157 N·m (16 kgf·m, 116 ft·lb) or more	– – –
Bevel Gear Backlash	0.10 ~ 0.20 mm (0.004 ~ 0.008 in.) (at pinion gear spline)	– – –
Rear Final Gear Case		
Gear Case Oil:		
Type	MOBIL Fluid 424 or CITGO TRANSGARD TRACTOR HYDRAULIC FLUID	– – –
Oil Level	Filler opening bottom	– – –
Capacity	0.72 L (0.76 US qt)	– – –
Rear Final Bevel Gear Backlash	0.04 ~ 0.17 mm (0.002 ~ 0.007 in.) (at pinion gear spline)	– – –

Special Tools

Bearing Puller:
57001-135

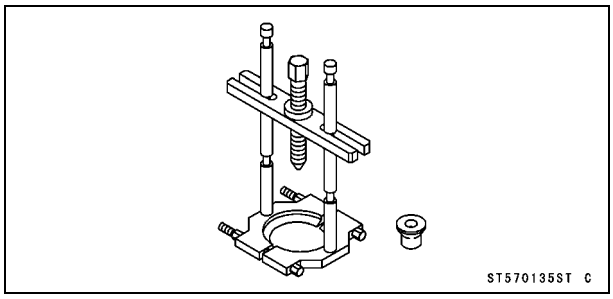

Bearing Driver Set:
57001-1129

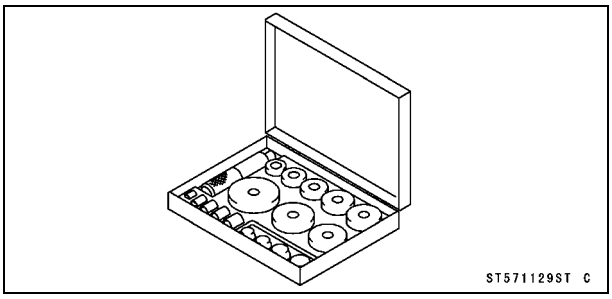

Steering Stem Bearing Driver:
57001-137

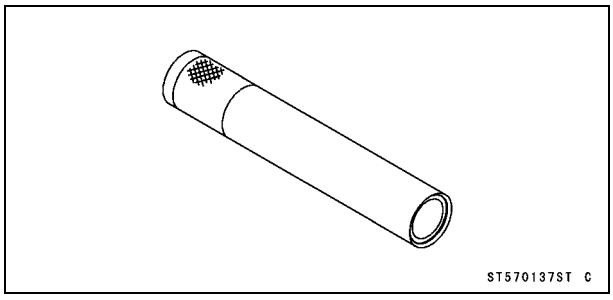

Rotor Puller, M16/M18/M20/M22 × 1.5:
57001-1216

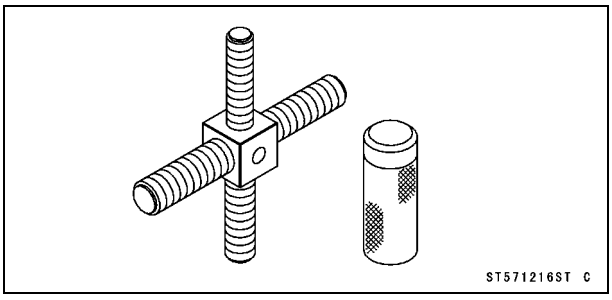

Inside Circlip Pliers:
57001-143

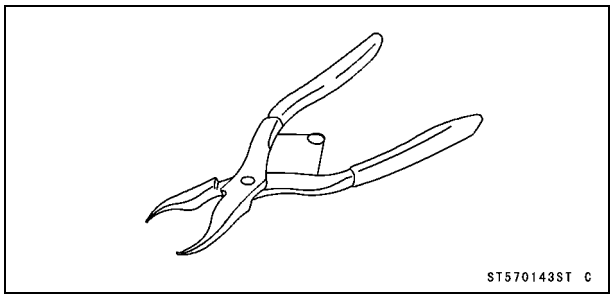

Pinion Gear Holder, m1.0:
57001-1281

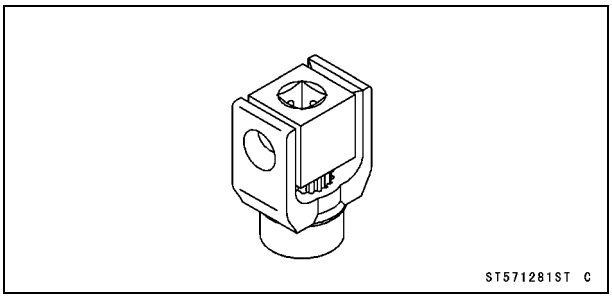

Outside Circlip Pliers:
57001-144

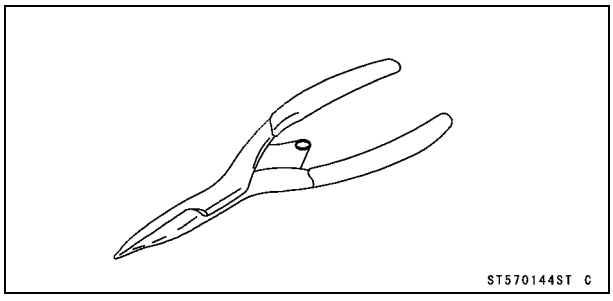

Socket Wrench:
57001-1363

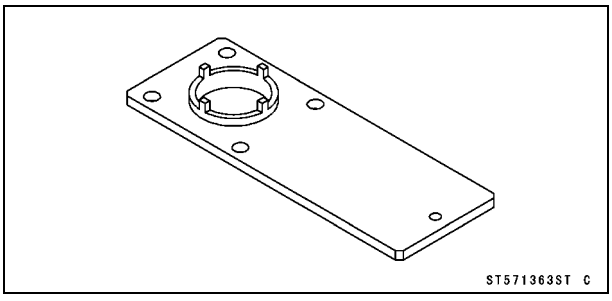

Oil Seal & Bearing Remover:
57001-1058

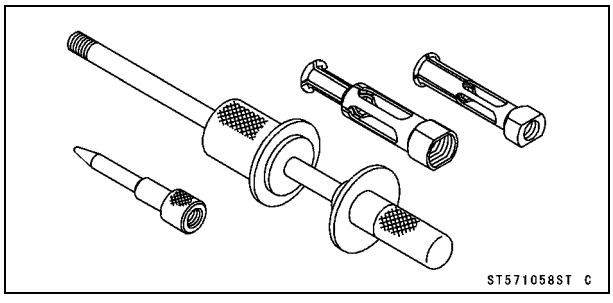

Holder & Guide Arbor:
57001-1476

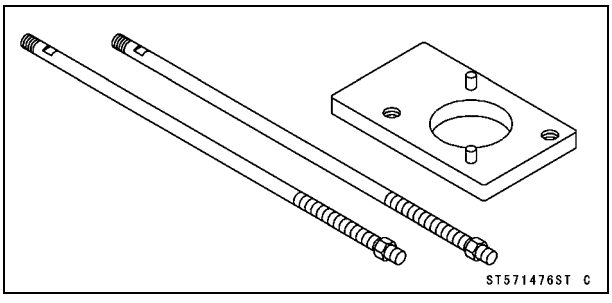

Special Tools

Socket Wrench, Hex 50:
57001-1478

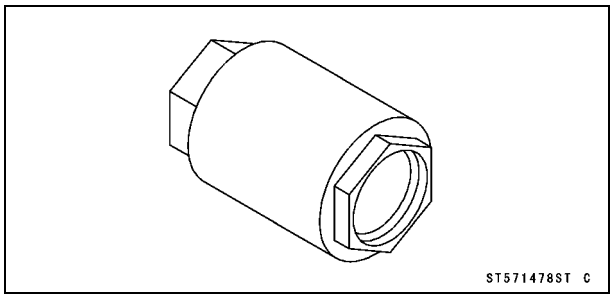

Output Shaft Holder & Spacer, m1.25:
57001-1479

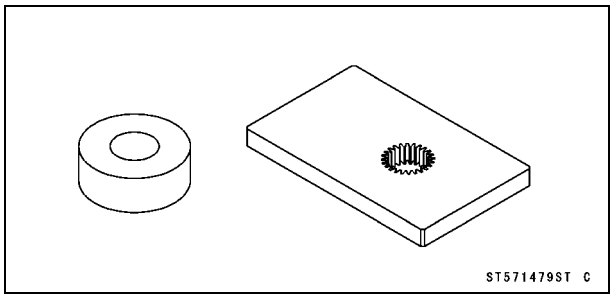

Nut Holding Bolts:
57001-1481

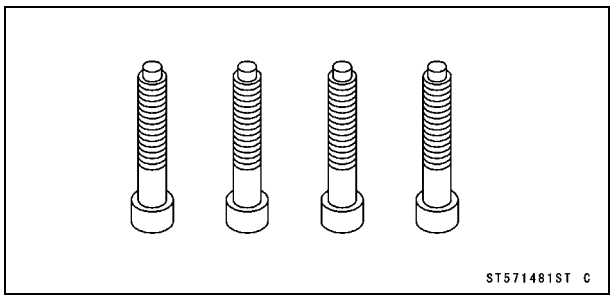

Socket Wench:
57001-1482

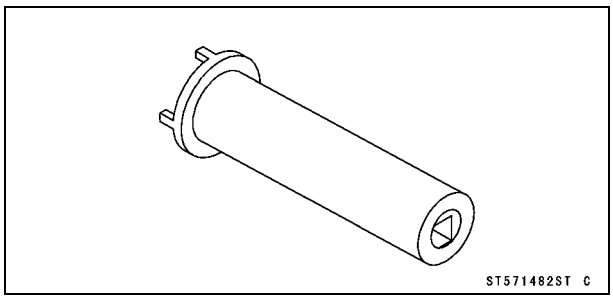

Socket Wrench, Hex 41:
57001-1484

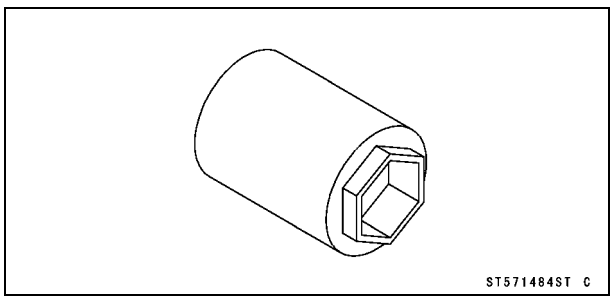

Pinion Gear Holder, m1.0:
57001-1485

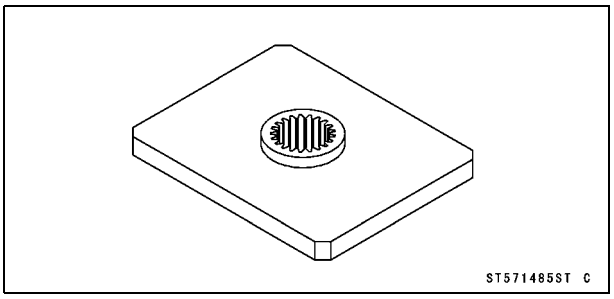

Bearing Driver, ϕ54.3:
57001-1488

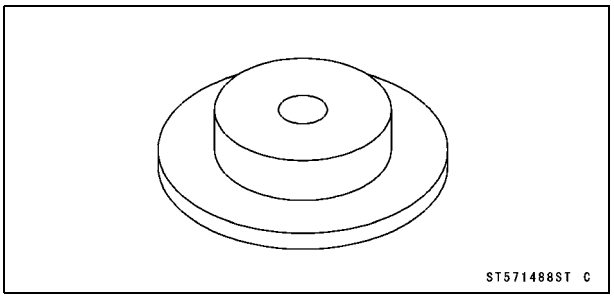

Gear Holder & Socket Wrench, Hex 24:
57001-1489

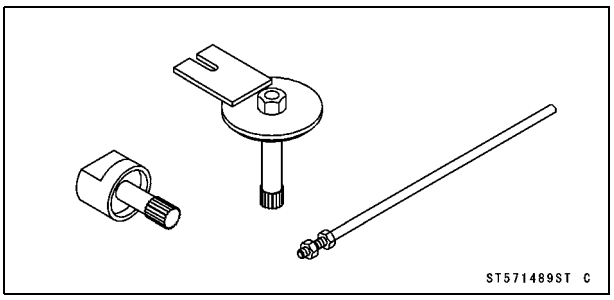

Hexagon Wench, Hex 41:
57001-1491

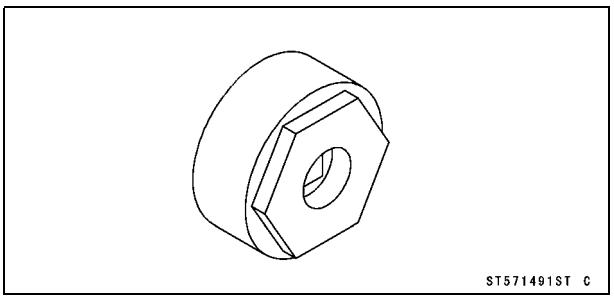

Oil Seal Driver, ϕ18.5:
57001-1505

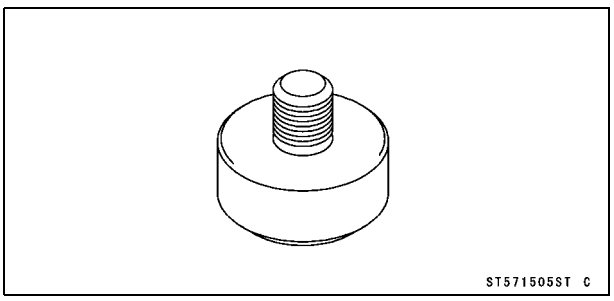

Special Tools

Oil Seal Driver, ϕ70:
57001-1506

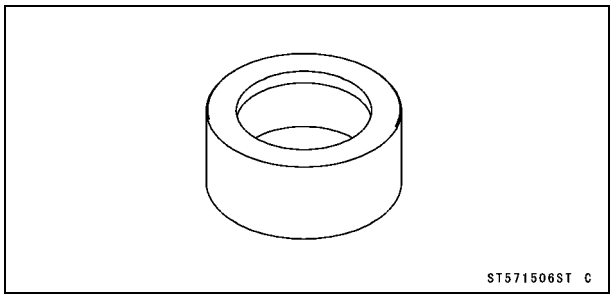

Output Shaft Holder:
57001-1570

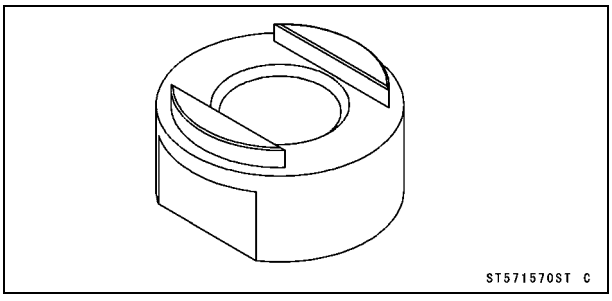

Output Bevel Gears

Output Drive Bevel Gear Removal

- Remove:
  Oil Pipe [A] (Engine Left and Outside, see Oil Pipe Removal in the Engine Lubrication System chapter)
  Output Drive Bevel Gear Cover Bolts [B]
  Output Drive Bevel Gear Cover [C]
  Forward/Reverse Detecting Sensor Mounting Bolt [D]

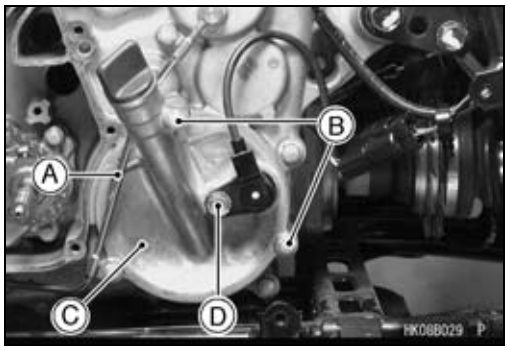

- Remove:
  Circlip [A]

  Special Tool - Outside Circlip Pliers: 57001-144
- Remove:
  Output Drive Idle Gear [B]

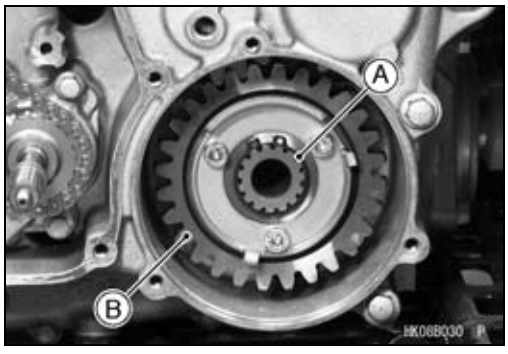

- Remove:
  Output Drive Bevel Gear Housing Bolts [A]
  Output Drive Bevel Gear Housing [B]

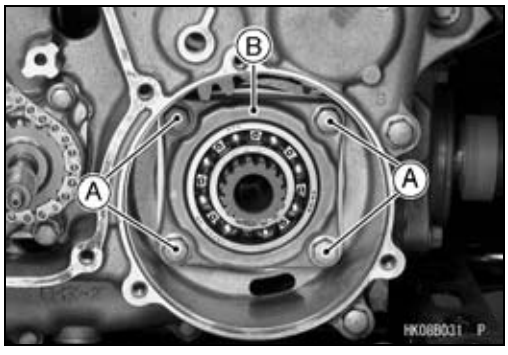

Output Drive Bevel Gear Installation

- Install the output drive bevel gear housing.
- Tighten:

  Torque - Output Drive Bevel Gear Housing Bolts: 26 N·m (2.7 kgf·m, 20 ft·lb)

- Install the rotor [A] so that the projections [B] face outward.
- Tighten:

  Torque - Rotor Mounting Bolts [C]: 12 N·m (1.2 kgf·m, 104 in·lb)

- Install:
  Output Drive Idle Gear
  New Circlip

  Special Tool - Outside Circlip Pliers: 57001-144

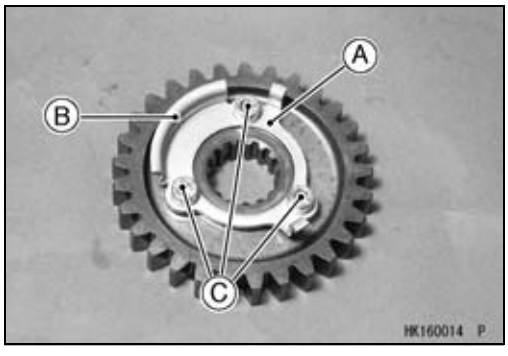

Output Bevel Gears

- Apply grease:
  O-rings [A]
- Install:
  Output Drive Bevel Gear Cover [B]
- Tighten:

Torque - Output Drive Bevel Gear Cover Bolts [C]: 8.8 N·m (0.90 kgf·m, 78 in·lb)

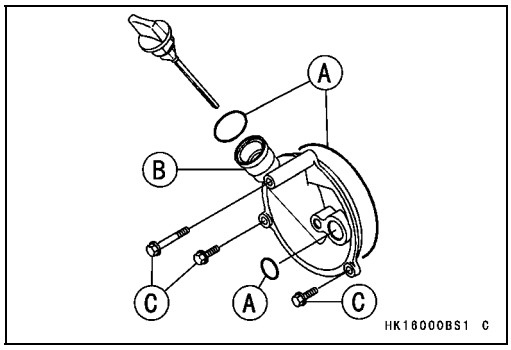

- Install:
  Forward/Reverse Detecting Sensor [A]
- Tighten:

Torque - Forward/Reverse Detecting Sensor Mounting Bolt: 15 N·m (1.5 kgf·m, 11 ft·lb)

Output Drive Bevel Gear Disassembly

- Remove:
  Output Drive Bevel Gear Housing [A] (see Output Drive Bevel Gear Removal)
- Look through the hole [B] in the housing.
- Turn the bevel gear [C] until the groove of the output drive bevel gear holder nut is seen.

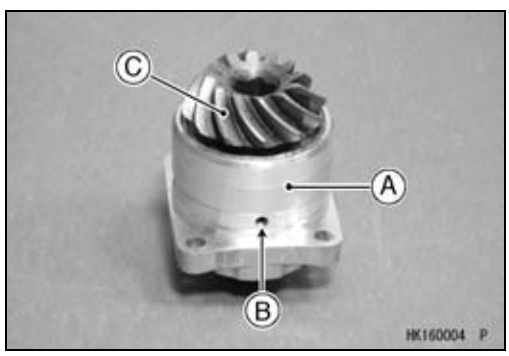

- Tighten the nut holding bolts [A] (4) securely into the grooves [B] of the bevel gear holder nut [C] in the output drive bevel gear housing.

Special Tool - Nut Holding Bolts: 57001-1481

[D] Output Drive Bevel Gear Housing
[E] Outer Ball Bearing
[F] Inner Ball Bearing
[G] Bearing Holder
[H] Output Drive Bevel Gear

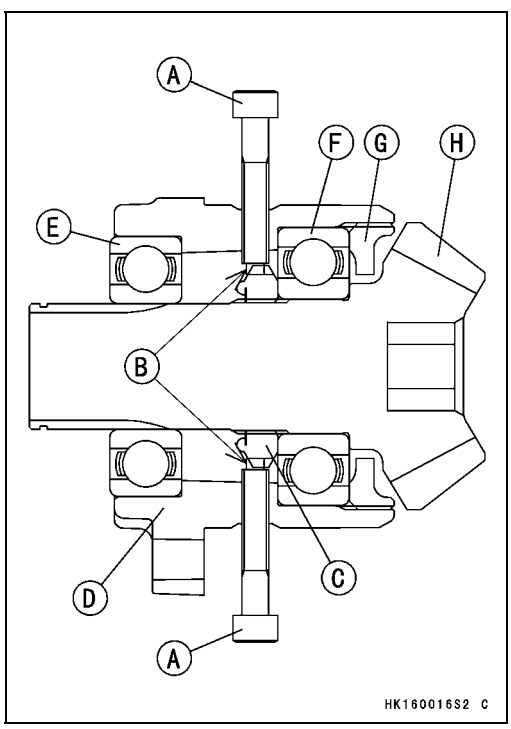

Output Bevel Gears

- Hold the output drive bevel gear housing [A] in a vise.
- Loosen the bevel gear [B] using an Allen wrench about four rotations.
- Remove one nut holding bolt, and look at through the hole.

★If the groove of the bevel gear holder nut is not seen, loosen the other three bolts.

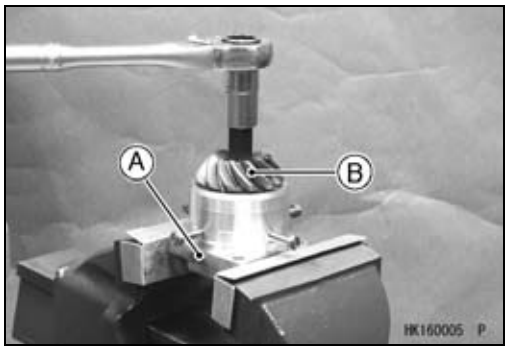

- Drive the gear shaft end using a copper mallet until the grooves of the bearing holder nut can be seen again.
- Retighten the nut holding bolts (4) securely into the groove of the bevel gear holder nut in the output drive bevel gear housing.

Special Tool - Nut Holding Bolts: 57001-1481

- Repeat the above procedure, and remove the bevel gear from the housing.

- Remove the bearing holder [A] using the hexagon wrench [B].

Special Tool - Hexagon Wrench, Hex 41: 57001-1491

○If it is difficult to break free the holder, apply the heat to it to softer the locking agent.

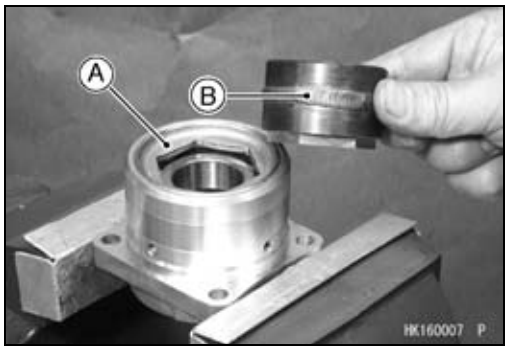

- Remove:
  Outer Ball Bearing [A]

Special Tool - Oil Seal & Bearing Remover [B]: 57001-1058

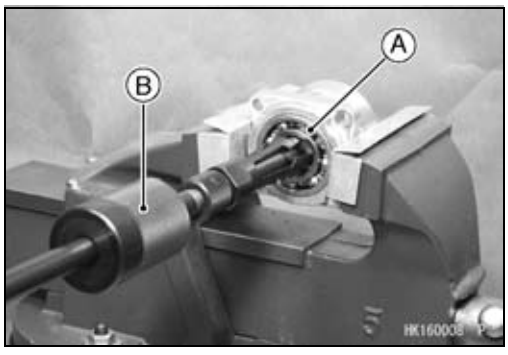

- Remove:
  Output Drive Bevel Gear Holder Nut
  Inner Ball Bearing [A]

Special Tool - Oil Seal & Bearing Remover [B]: 57001-1058

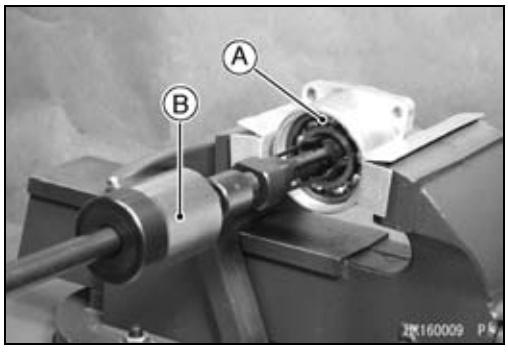

Output Bevel Gears

Output Drive Bevel Gear Assembly

- Press the new inner ball bearing until it is bottomed.

  Special Tool - Bearing Driver Set [A]: 57001-1129

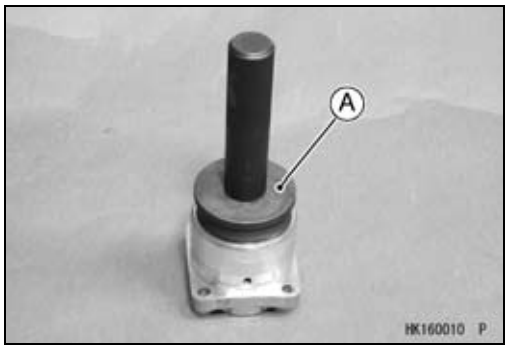

- Apply a non-permanent locking agent to the threads of the bearing holder [A] and tighten it so that the deep side [B] faces outward.

  Torque - Bearing Holder: 118 N·m (12 kgf·m, 87 ft·lb)

- Press the output drive bevel gear until it is bottomed.

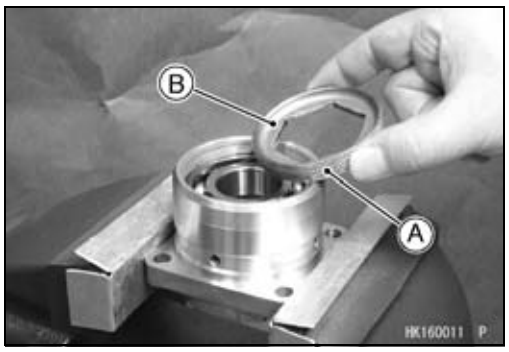

- Apply a non-permanent locking agent to the threads of the bevel gear holder nut [A] and tighten it so that the projection side [B] faces outward.

  Special Tool - Socket Wrench: 57001-1482 [C]

  Torque - Bevel Gear Holder Nut: 157 N·m (16 kgf·m, 116 ft·lb)

- Press the new outer ball bearing until it is bottomed.

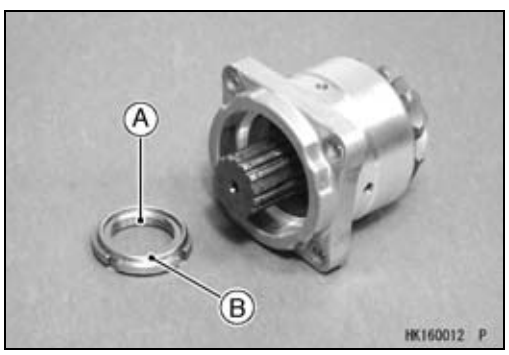

Output Driven Bevel Gear Removal

- Remove:
  Swingarm (see Swingarm Removal in the Suspension chapter)
  Front Propeller Shaft (see Front Propeller Shaft Removal) or Engine (see Engine Removal in the Engine Removal/Installation chapter)
  Output Driven Bevel Gear Housing Bolts [A]
  Output Driven Bevel Gear Housing [B]

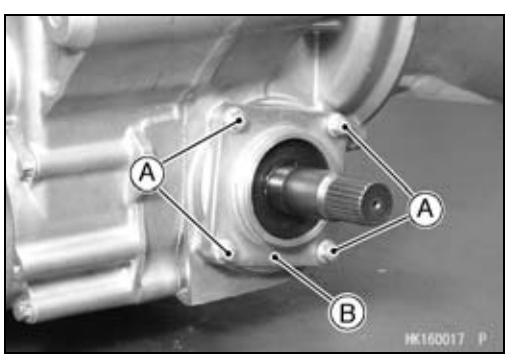

Output Bevel Gears

- Tap lightly the front end [A] of the output driven bevel gear shaft using a plastic mallet.

○The output driven bevel gear shaft assembly comes off with the housing.

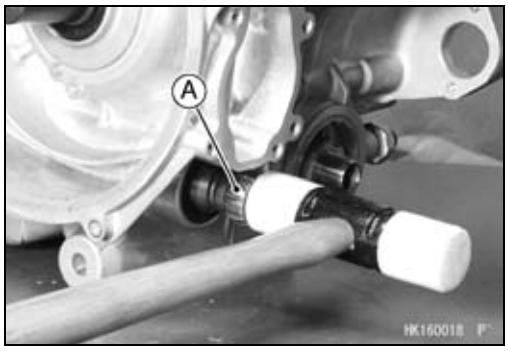

Output Driven Bevel Gear Installation

- Apply grease:
  O-ring [A]
- Install the output driven bevel gear shaft assembly.
- Tighten:

  Torque - Output Driven Bevel Gear Housing Bolts: 26 N·m (2.7 kgf·m, 20 ft·lb)

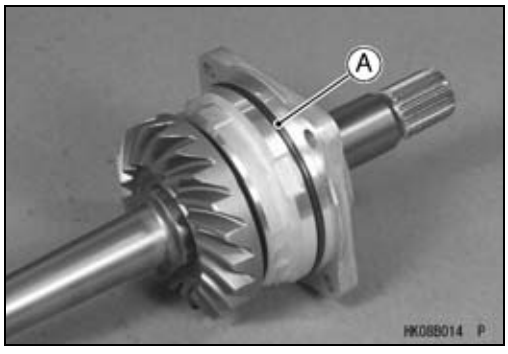

Output Driven Bevel Gear Disassembly

- Remove:
  Output Driven Bevel Gear Housing Assembly (see Output Driven Bevel Gear Removal)
  Oil Seal
- Hold the output shaft holder [A] in a vise, and set the housing assembly [B] on the holder.

  Special Tool - Output Shaft Holder: 57001-1570

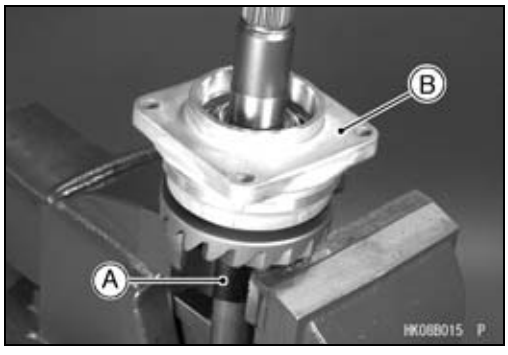

- Remove:
  Output Shaft Holder Nut [A]

  Special Tool - Socket Wrench [B]: 57001-1482

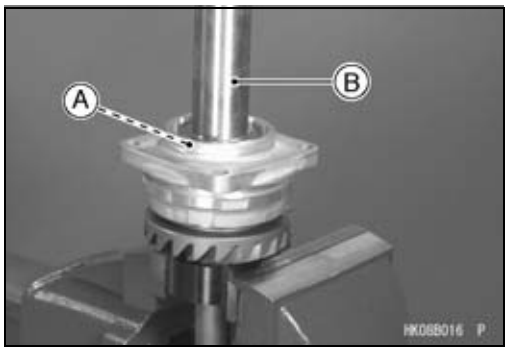

- Remove the output shaft [A] from the housing [B] using a press.

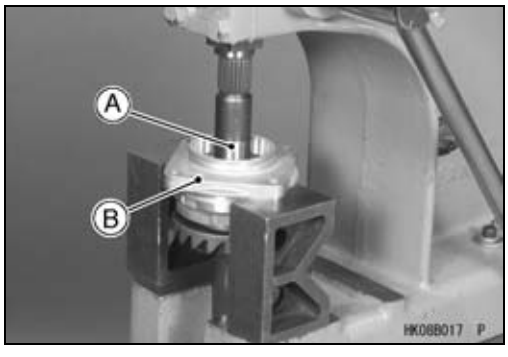

Output Bevel Gears

- Hold the housing assembly [A] with the holder [B] in a vise.

  Special Tool - Holder & Guide Arbor: 57001-1476

- Remove:
  Bearing Holder [C]

  Special Tool - Socket Wrench, Hex 50 [D]: 57001-1478

○If the holder seems too difficult to break free, apply heat to softer the locking agent.

- Remove:
  Ball Bearing

  Special Tool - Oil Seal & Bearing Remover: 57001-1058

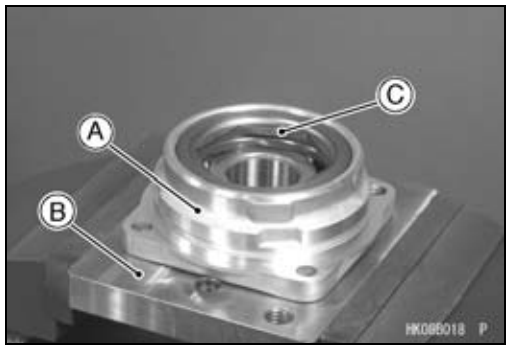

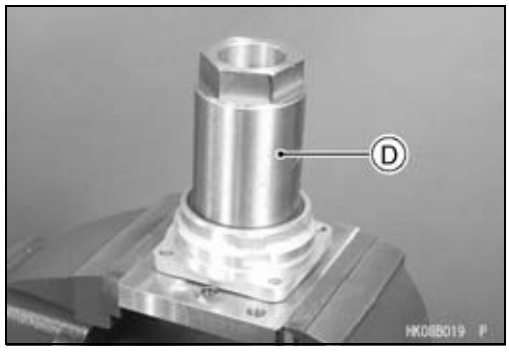

- Remove the output driven bevel gear [A] from the output shaft [B] using the bearing puller [C] and spacer [D].

  Special Tools - Bearing Puller: 57001-135
  Output Shaft Holder & Spacer, m1.25: 57001-1479

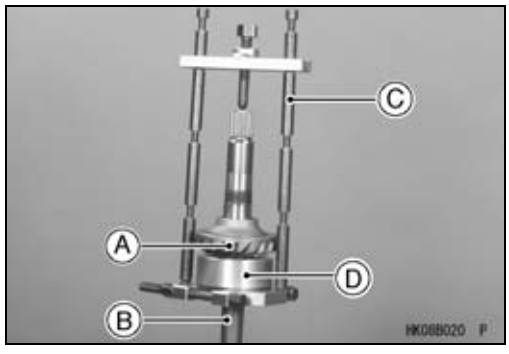

Output Driven Bevel Gear Assembly

- Press the new ball bearing until it is bottomed.

  Special Tool - Bearing Driver Set [A]: 57001-1129

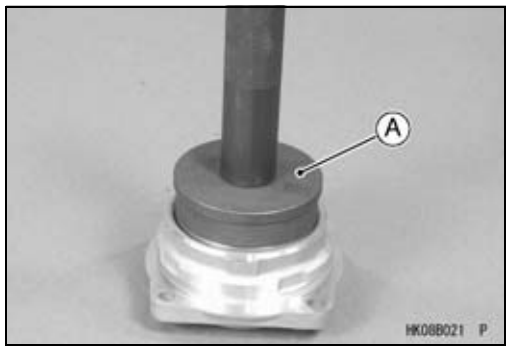

- Hold the housing assembly [A] with the holder [B] in a vise.

  Special Tool - Holder & Guide Arbor: 57001-1476

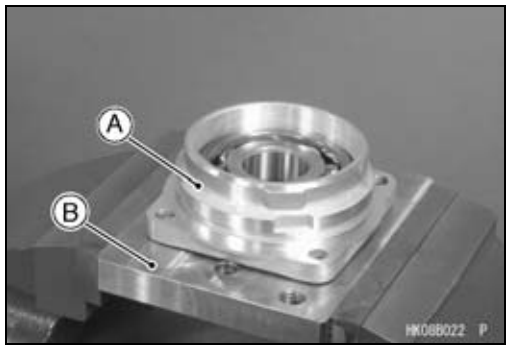

Output Bevel Gears

- Apply a non-permanent locking agent to the threads of the bearing holder [A] and tighten it.

  Special Tool - Socket Wrench, Hex 50 [B]: 57001-1478

  Torque - Bearing Holder: 137 N·m (14 kgf·m, 101 ft·lb)

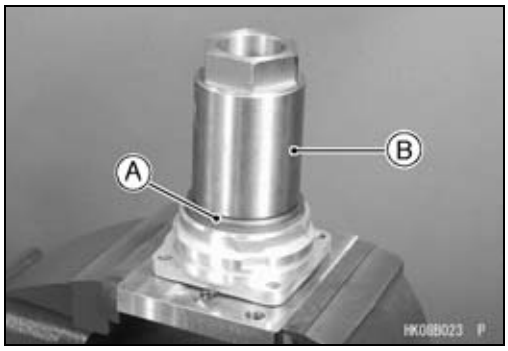

- Hold the output shaft holder [A] in a vise, and set the output shaft [B] on the holder.

  Special Tool - Output Shaft Holder: 57001-1570

- Press the output driven bevel gear [C] using the steering stem bearing driver [D] until it is bottomed.

  Special Tool - Steering Stem Bearing Driver: 57001-137

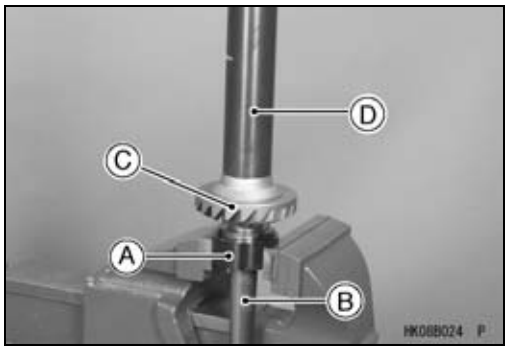

- Press the housing assembly [A] using the steering stem bearing driver [B] until it is bottomed.

  Special Tool - Steering Stem Bearing Driver: 57001-137

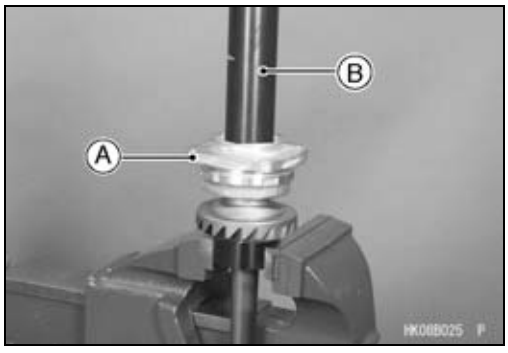

- Apply a non-permanent locking agent to the threads of the output shaft holder nut [A] and tighten it so that the projection side [B] faces outward.

  Special Tool - Socket Wrench: 57001-1482

  Torque - Output Shaft Holder Nut: 157 N·m (16 kgf·m, 116 ft·lb)

- Apply grease to the oil seal and press it so that it is flush with the end surface of the housing.

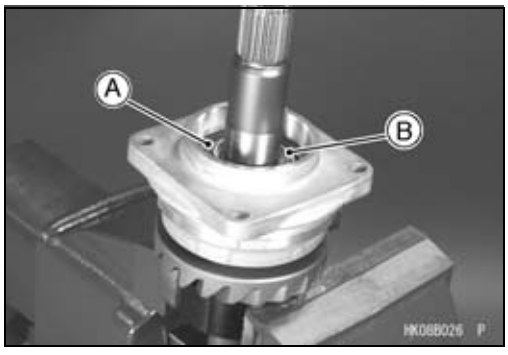

Output Bevel Gears Adjustment

The **backlash** and **tooth contact pattern** of the bevel gears must be correct to prevent the gears from making noise and being damaged.

When replacing any one of the backlash-related parts, be sure to check and adjust the backlash and tooth contact. First adjust the backlash, and then tooth contact by replacing shims.

These two adjustments are of critical importance and must be carried out in the correct sequence, using the procedures shown.

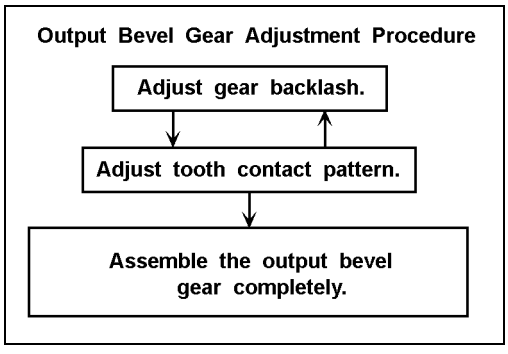

Output Bevel Gears

Output Bevel Gear (Backlash-related Parts)

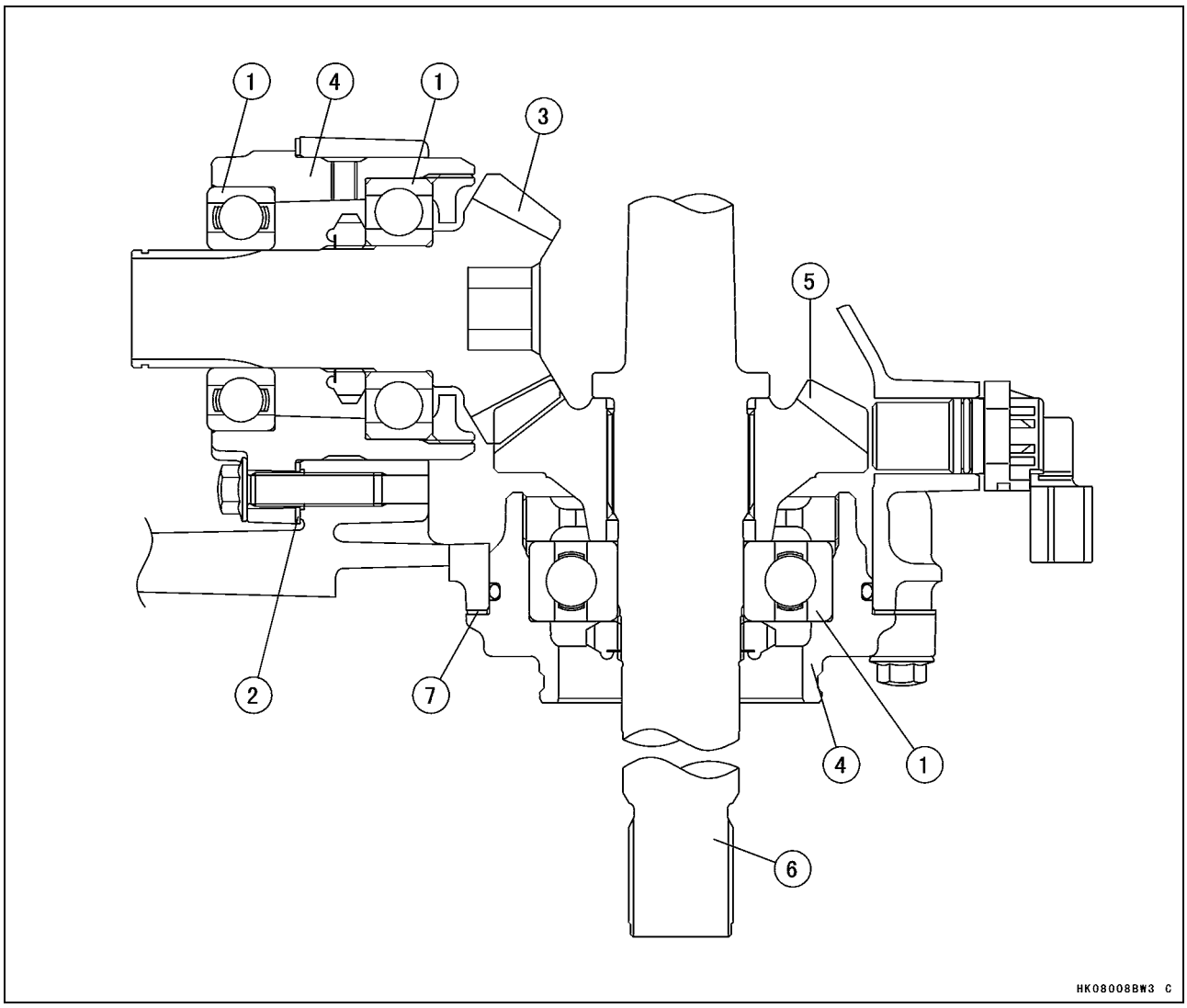

1. Ball Bearings
2. Drive Bevel Gear Shims
3. Output Drive Bevel Gear
4. Bearing Housings
5. Output Driven Bevel Gear
6. Output Driven Shaft
7. Driven Bevel Gear Shims

Drive Bevel Gear Shims for Tooth Contact Adjustment

Thickness	Part Number
0.15 mm (0.006 in.)	92180-1311
0.2 mm (0.008 in.)	92180-1312
0.5 mm (0.020 in.)	92180-1313
0.8 mm (0.031 in.)	92180-1314
1.0 mm (0.039 in.)	92180-1351
1.2 mm (0.047 in.)	92180-1352

Driven Bevel Gear Shims for Backlash Adjustment

Thickness	Part Number
0.15 mm (0.006 in.)	92180-1307
0.2 mm (0.008 in.)	92180-1308
0.5 mm (0.020 in.)	92180-1309
0.8 mm (0.031 in.)	92180-1310
1.0 mm (0.039 in.)	92180-1349
1.2 mm (0.047 in.)	92180-1350

Output Bevel Gears

Bevel Gear Backlash Adjustment

○The amount of backlash is influenced by driven bevel gear position more than by drive bevel gear position.

- Remove the output drive idle gear (see Output Drive Bevel Gear Removal).

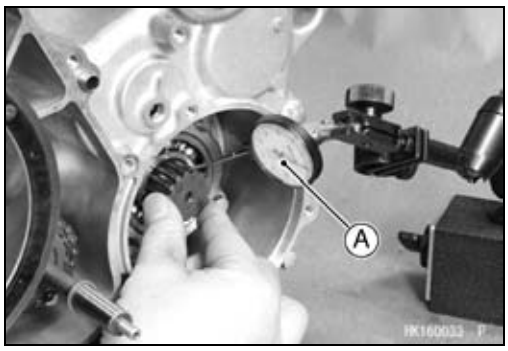

- Set up a dial gauge [A] against the output drive shaft spline groove to check gear backlash.

○To measure the backlash, turn the shaft clockwise and counterclockwise slightly so as not to move the mate gear. A rod can be inserted through the lower hole of the housing and into contact with driven gear. This may help to hold it still. The difference between the highest and lowest gauge reading is the amount of backlash.

★If the backlash is not within the limit, replace the shim(s) at the driven bevel gear.

★Change the thickness a little at a time.

- Recheck the backlash, and readjust as necessary.

Output Bevel Gear Backlash
Standard: 0.05 ~ 0.11 mm (0.0020 ~ 0.0043 in.) (at output drive shaft spline)

Tooth Contact Adjustment

○Tooth contact location is influenced by drive gear position more than by driven gear position.

- Clean any dirt and oil off the bevel gear teeth.
- Apply checking compound to 4 or 5 teeth on the output driven bevel gear.

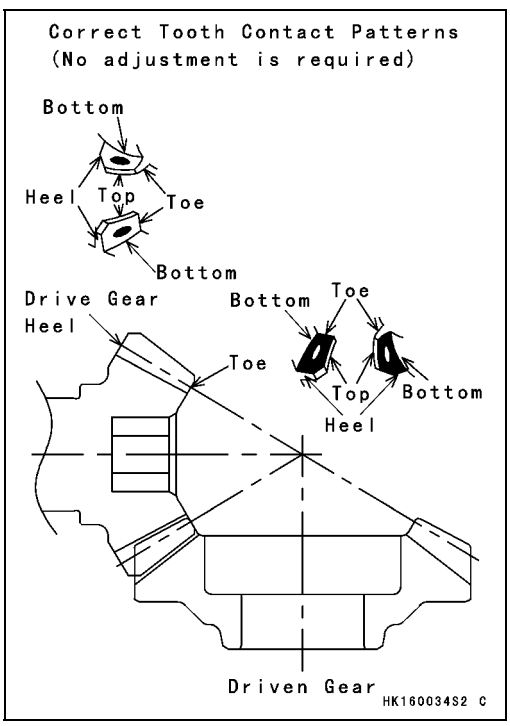

NOTE

○*Apply checking compound to the teeth in a thin, even coat with a fairly stiff paint brush. If painted too thickly, the exact tooth pattern may not appear.*

○*The checking compound must be smooth and firm with the consistency of tooth paste.*

○*Special compounds are available from automotive supply stores for the purpose of checking differential gear tooth patterns and contact. Use this for checking the bevel gears.*

- Turn the output driven shaft for 3 or 4 turns in the drive and reverse (coast) directions, while creating a drag on the drive bevel gear shaft.
- Check the drive pattern and coast pattern of the bevel gear teeth. The tooth contact patterns of both drive and coast sides should be centrally located between the top and bottom of the tooth, and a little closer to the toe of the tooth.

★If the tooth contact pattern is incorrect, replace the shim(s) at the drive bevel gear and shim(s) at the driven bevel gear, following the examples shown. Then erase the tooth contact patterns, and check them again. Also check the backlash every time the shims are replaced. Repeat the shim change procedure as necessary.

NOTE

○*If the backlash is out of the standard range after changing shims, correct the backlash before checking the tooth contact pattern.*

Output Bevel Gears

Example 1: Decrease the thickness of the drive bevel gear shim(s) by 0.1 mm (0.004 in.), and/or increase the thickness of the driven bevel gear shim(s) by 0.1 mm (0.004 in.) to correct the pattern shown below. Repeat in 0.1 mm (0.004 in.) steps if necessary.

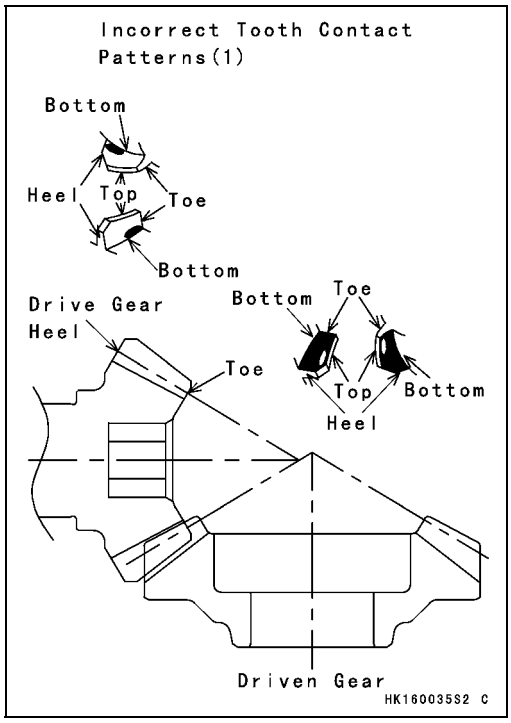

Example 2: Increase the thickness of the drive bevel gear shim(s) by 0.1 mm (0.004 in.), and/or decrease the thickness of the driven bevel gear shim(s) by 0.1 mm (0.004 in.) to correct the pattern shown below. Repeat in 0.1 mm (0.004 in.) steps if necessary.

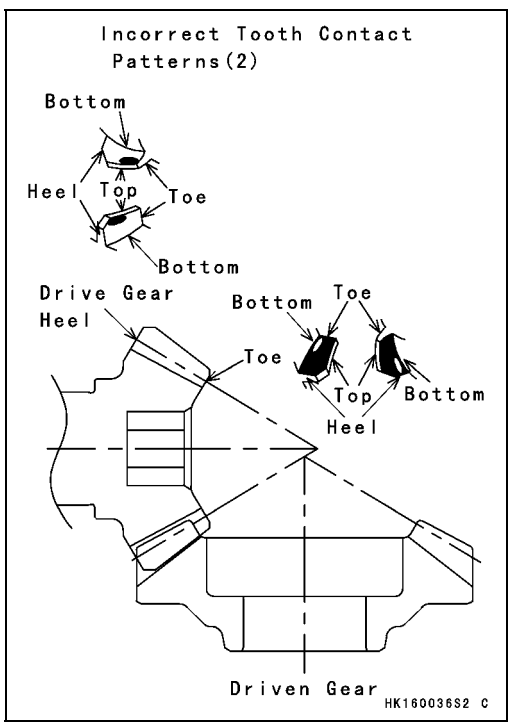

Output Bevel Gears

Bevel Gears Inspection

- Visually check the bevel gears [A] for scoring, chipping, or other damage.

★Replace the bevel gears as a set if either gear is damaged.

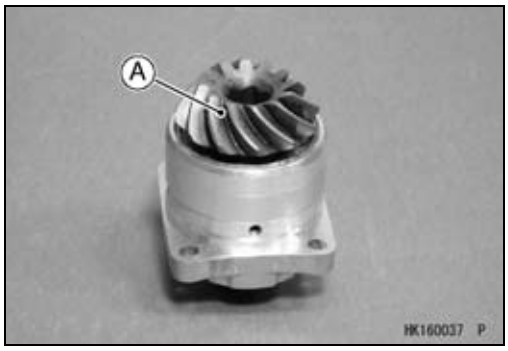

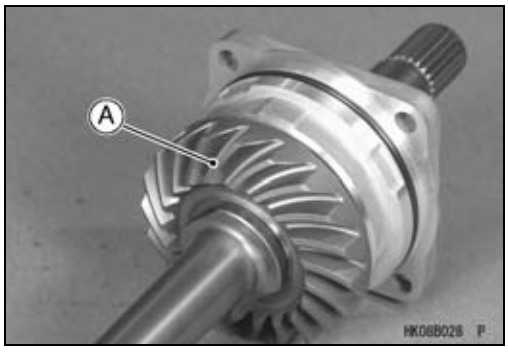

Front Propeller Shaft

Front Propeller Shaft Removal

- Slip the O-ring clamps off the grooves on the small rubber boots [A], and then pull the boot.

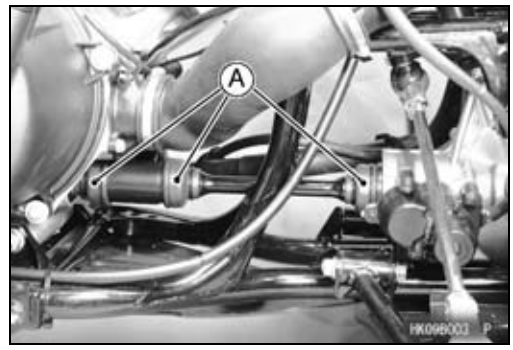

- Push the front propeller shaft [A] rearward, and remove the front end [B] from the front final gear case.
- Remove the front propeller shaft from the vehicle.

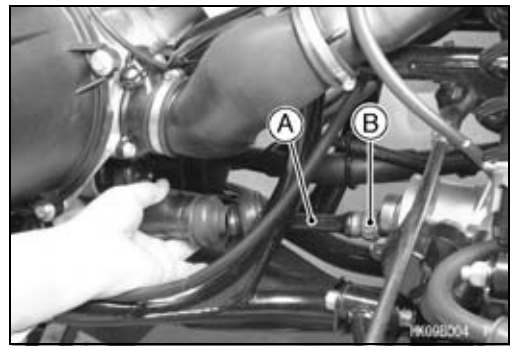

Front Propeller Shaft Installation

- Wipe off any old grease on the splines of the propeller shaft [A] and the coupling [B].
- Inspect the splines of the propeller shaft and the coupling.

★If the splines are twisted or damaged in any way, replace the parts as needed.

- Apply molybdenum disulfide grease to all splines.
- Replace the circlip [C] with a new one, if it is removed.
- Wipe off any old grease on the splines of the shafts in the engine and front final gear case.
- Inspect the O-rings on those shafts for damage.

★If any doubt exists, replace the O-rings with new ones.

- Apply molybdenum disulfide grease to the splines of the shafts on the output bevel gear and front final gear case.
- First install the rear end, and then install the front end.
- Slip the two O-ring clamps into the groove on the small rubber boot.

  O-rings [D]
  Boots [E]
  Spring [F]
  Spring Seat [G]
  Front [H]

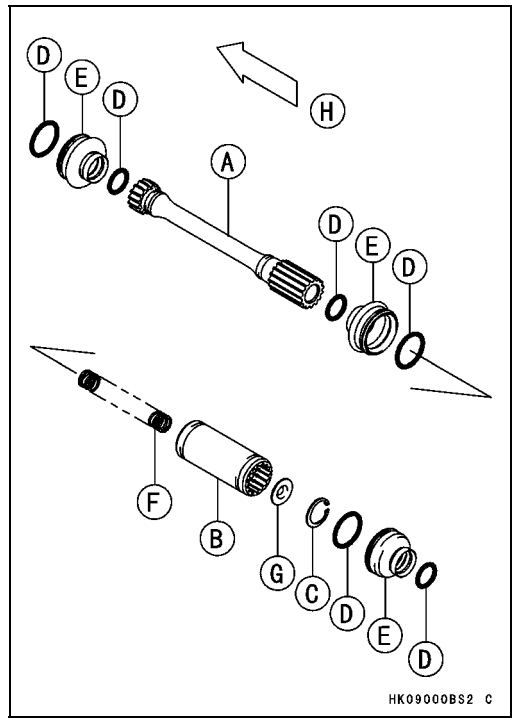

Front Axle

Front Axle Removal

- Drain the front final gear case oil (see Front Final Gear Case Oil Change in the Periodic Maintenance chapter).
- Remove:
  Front Wheel (see Wheel Removal in the Wheels/Tires chapter)
  Steering Knuckle (see Steering Knuckle Removal in the Steering chapter)
- Pull the front axle [A] in a straight line out of the front final gear case.

Front Axle Installation

- Wipe the old grease off the splines of the axle and the gear case oil seal.
- Visually inspect the splines of the axle.
- ★If they are badly worn or chipped, replace the axle with a new one.
- Apply molybdenum disulfide grease to the axle splines.
- Apply grease to the gear case oil seal.
- Insert the left axle so that the teeth [A] fit in the grooves [B].

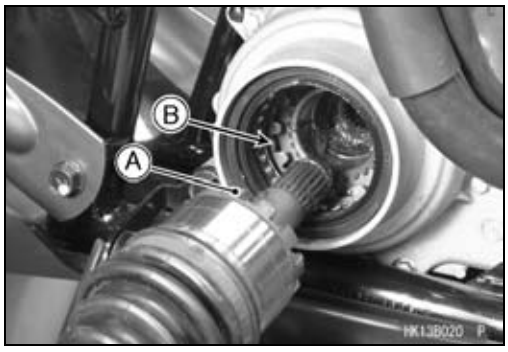

- Tap [A] the end of the front axle lightly and install the front axle.

NOTE

○*The axle shaft must not come off easily.*

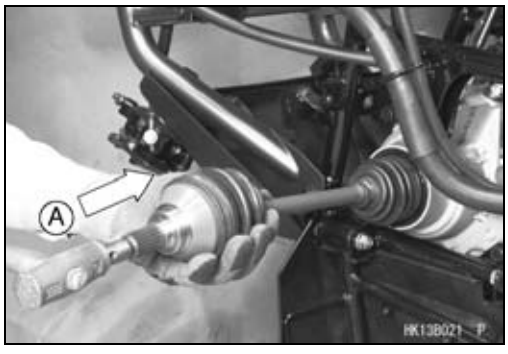

Front Axle Joint Boot Inspection

- Refer to the Front Axle Joint Boot Inspection in the Periodic Maintenance chapter.

Front Axle Joint Boot Replacement

Outboard Joint Boot Removal

- Remove:
  Front Axle (see Front Axle Removal)
  Boot Bands [A]
- Scrap the removed boot bands.
- Slide the joint boot toward the inboard joint.

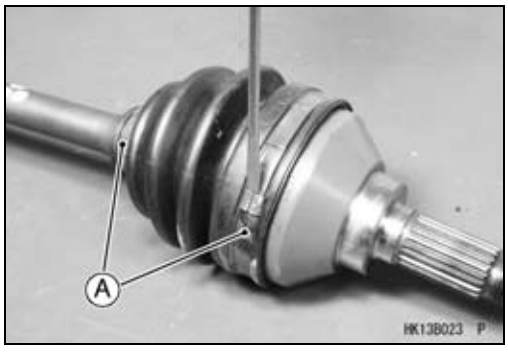

Front Axle

- Tap the bearing housing [A] straight [B] with a plastic hammer to separate it from the shaft.

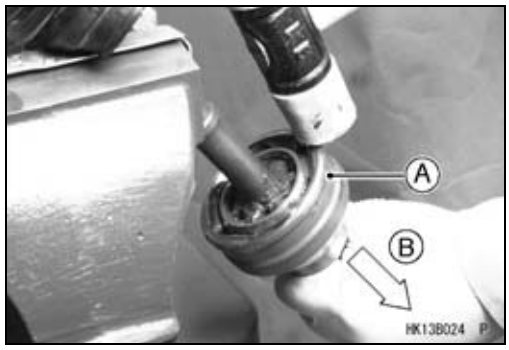

CAUTION
Do not tap on the cage. Be careful not get hurt when the housing comes out. If the splined portion of shaft cracked or damaged during disassembling of outboard joint, do not reuse the shaft.

- Remove:
  Circlip [A]
  Boot [B]
  Small Band [C]

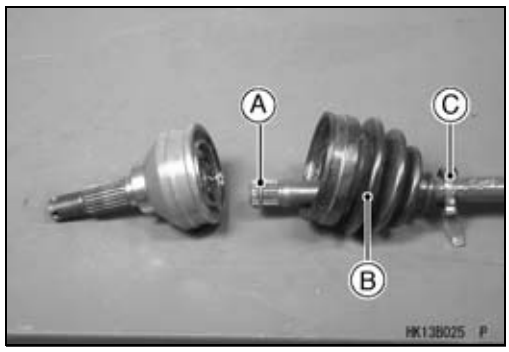

Outboard Joint Boot Installation

- Clean the axle shaft by wiping off the used grease on it.
- Wind the tape on the splines of the axle shaft in order to protect the joint boot.
- Install:
  New Small Band [A]
  New Boot [B]

○Apply the special grease slightly on the inside of the new boot small diameter, and install the boot on the axle shaft.

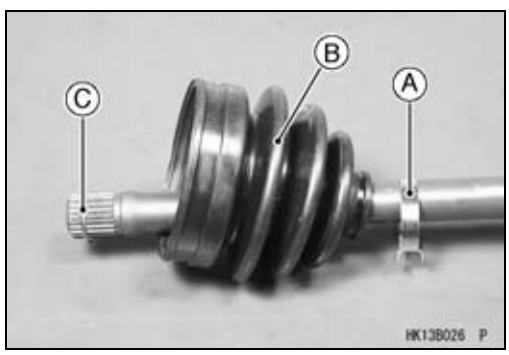

CAUTION
Only the special grease that is included with the boot kit can be applied to the boots.

- Install:
  New Circlip [C]

- Apply the special grease slightly on the part [A] of the band installation in order to make easy to install the boot band.
- Tighten the small boot band [B].

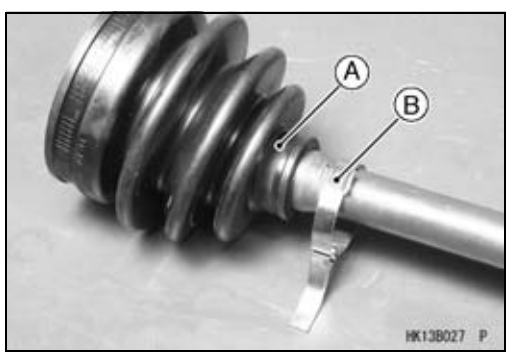

○Tighten the boot band [A] and bend the tangs [B] securely to hold down the end of the band.

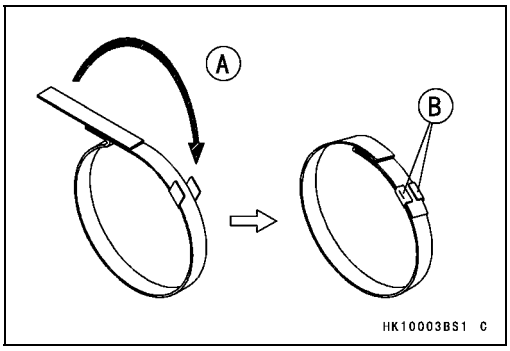

- Place the special grease tube nozzle in the bore of the housing and squeeze the tube [A] until the grease comes out from the joint bearing.

- Tap the shaft end [A] straight with a plastic hammer until it is locked by the circlip.

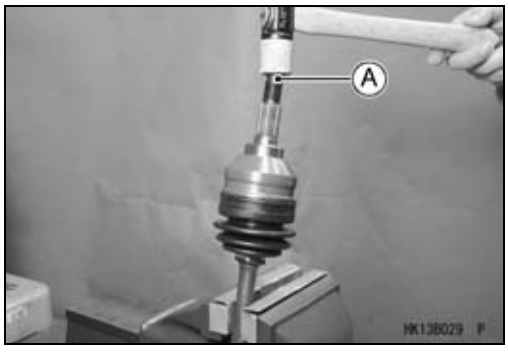

- Squeeze all of the special grease [A] into the new boot [B], and slide the boot onto the outboard joint [C].

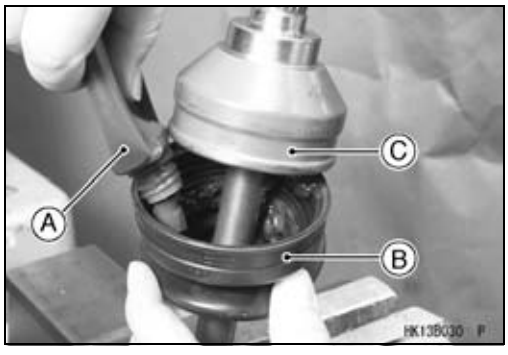

- Compress the axle assembly to the specified length while relieving the air pressure inside the inboard boot.
- Hold the axle at this setting.

Standard Length of Assembling:
Right Front Axle: 178.6 mm (7.03 in.) [A]

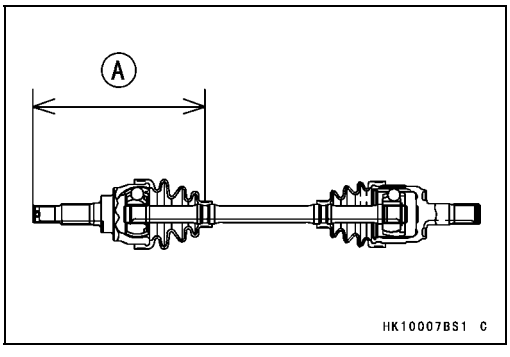

Front Axle

Left Front Axle: 178.6 mm (7.03 in.) [A]

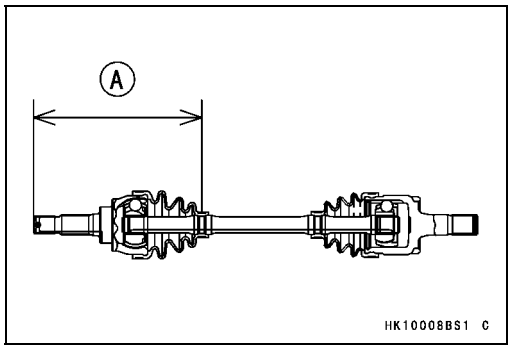

- Open the edge [A] of the boot in order to equalize the air pressures.

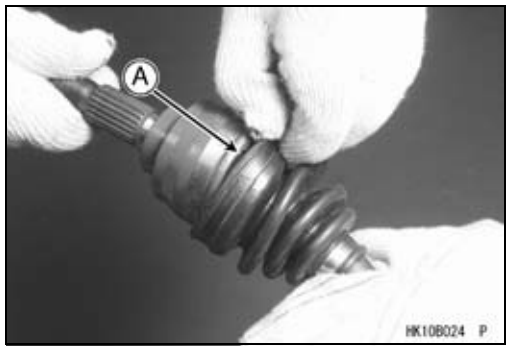

- Tighten the large band [A] and bend the tangs securely to hold down the end of the band.

Maximum Outside Diameter of Band: 80.2 mm (3.16 in.)
(After tightening the outside diameter)

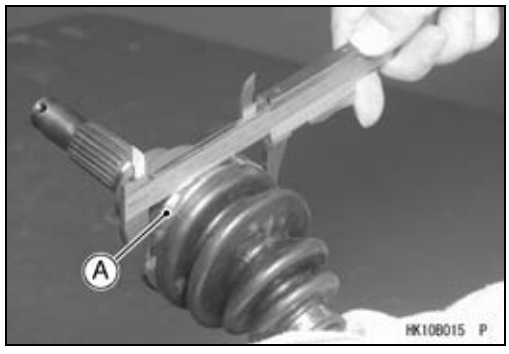

Inboard Joint Boot Removal

- Remove:
  Front Axle (see Front Axle Removal)
  Boot Bands [A]
- Scrap the removed boot bands.
- Slide the joint boot toward the outboard joint [B].

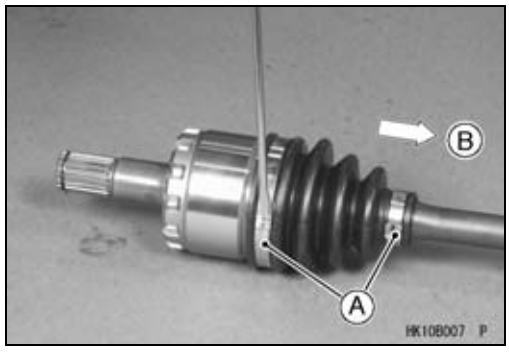

- Remove the retaining ring [A].
- Separate to the axle shaft.

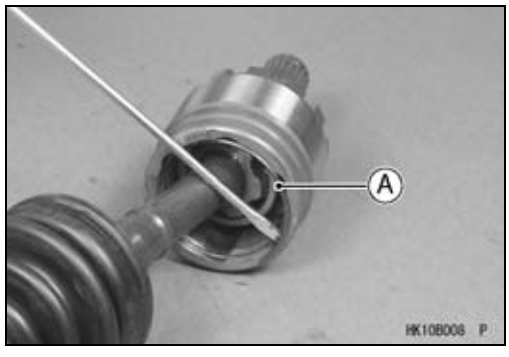

- Remove the steel balls [A].
- Slide the cage [B] toward the center of the axle.

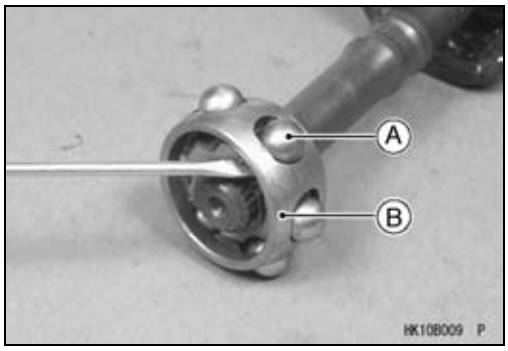

- Remove:
  Circlip [A]

  Special Tool - Outside Circlip Pliers [B]: 57001-144

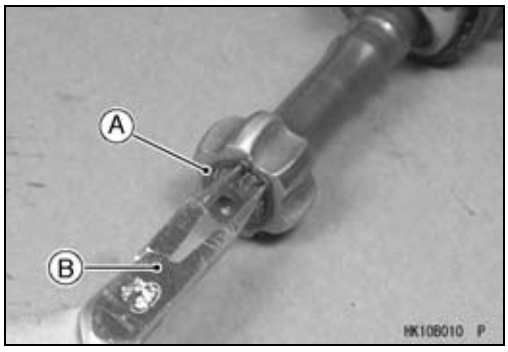

- Remove the inner race [A] using a suitable bearing remover [B].
- Remove the inboard joint boot [C].

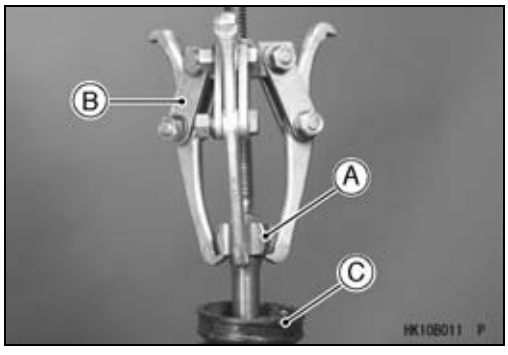

Inboard Joint Boot Installation

- Wind the tape on the splines of the axle shaft in order to protect the joint boot.
- Install:
  New Small Band [A]
  New Inboard Joint Boot [B]
  Cage [C]

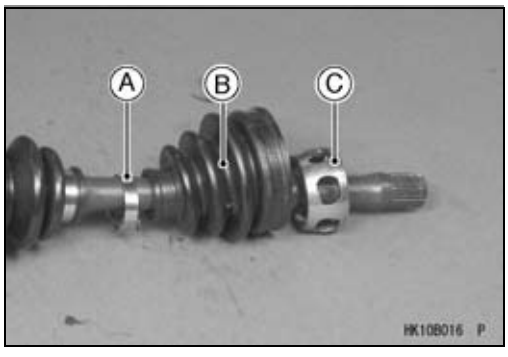

- Install the inner race [A] so that the flat side [B] faces outboard joint.

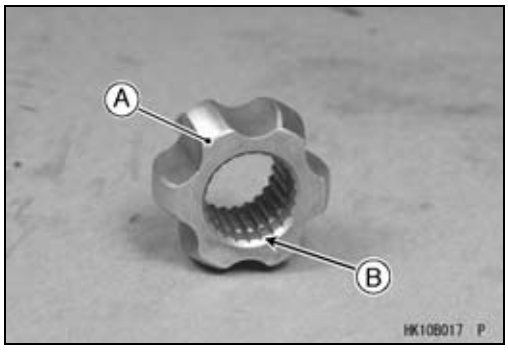

Front Axle

- Press the inner race [A] using the rotor puller [B] (57001 -1216) until it is bottomed.

  Special Tool - Rotor Puller, M16/M18/M20/M22 × 1.5: 57001 -1216

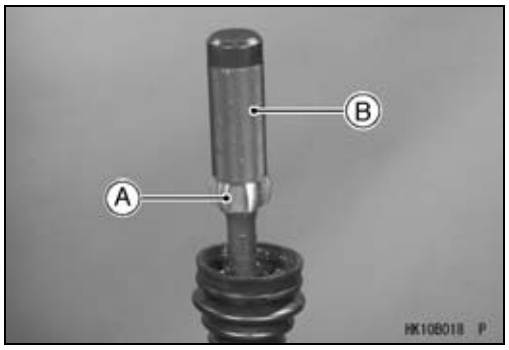

- Install:
  Circlip [A]

  Special Tool - Outside Circlip Pliers: 57001-144
- Slide the cage [B] on the inner race and install the steel balls [C].

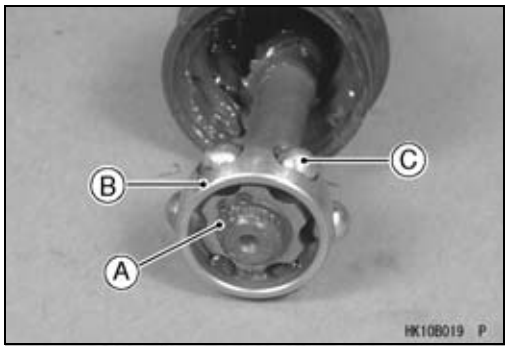

- Apply the special grease [A] to the steel balls and cage.

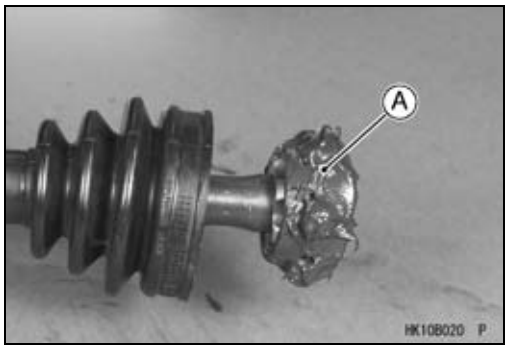

- Squeeze about half a tube (30 grams) of the special grease [A] into the bearing cup [B].

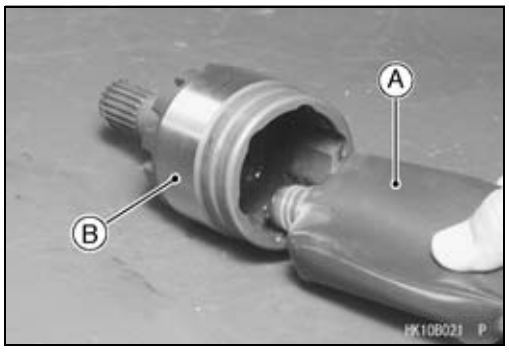

- Insert the balls and cage assembly in the bearing cup strongly.

- Install the new retaining ring [A] so that the opening [B] is aligned with one of the projections [C].

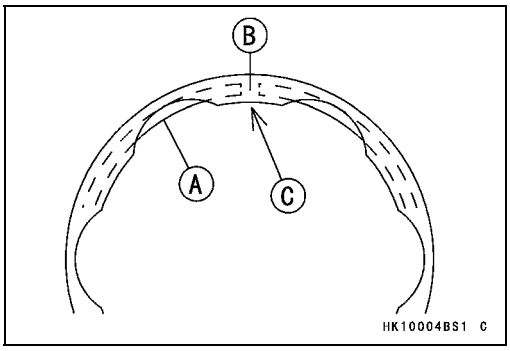

- Tighten the small band.
- Squeeze the remaining special grease [A] into the inboard joint boot [B].

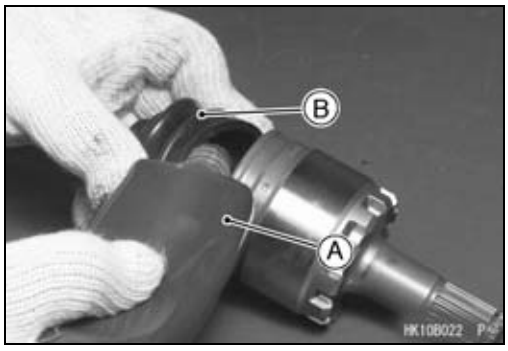

- Compress the axle assembly to the specified length while relieving the air pressure inside the inboard boot.
- Hold the axle at this setting.

Standard Length of Assembling
Right Front Axle: 161.1 mm (6.34 in.) [A]

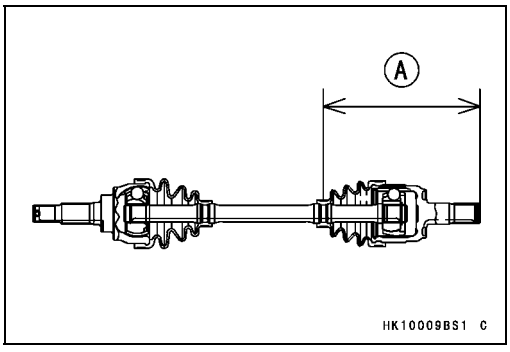

Left Front Axle: 169.1 mm (6.66 in.) [A]

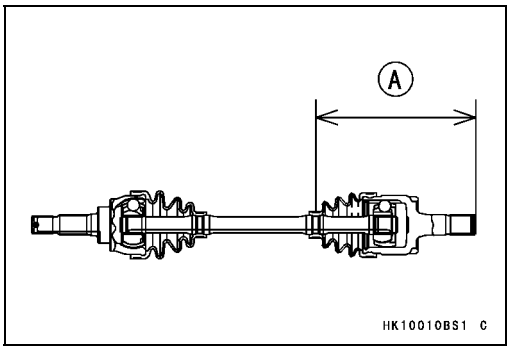

- Open the edge of the boot in order to eqalize the air pressures.
- Tighten the large band [A] and bend the tangs securely to hold down the end of the band.

Maximum Outside Diameter of Band: 69 mm (2.72 in.)
(After tightening the outside diameter)

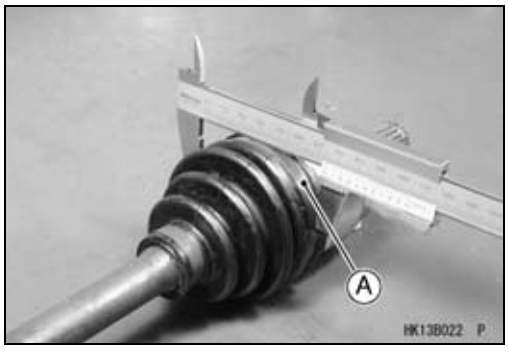

Front Axle

- While the band is held at the diameter above, tap down the tangs [A] of the clamp.

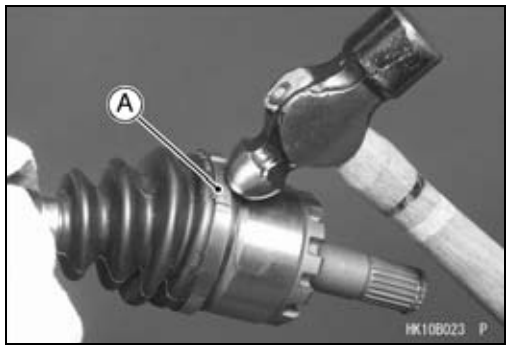

Front Final Gear Case

Front Final Gear Case Oil Level Inspection

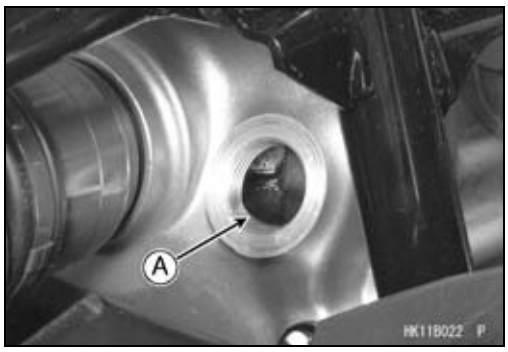

- Park the vehicle so that it is level, both side-to-side and front-to-rear.
- Remove the filler cap.

CAUTION
Be careful not to allow any dirt or foreign materials to enter the gear case.

- Check the oil level. The oil level should come to the bottom of the filler opening [A].

★If it is insufficient, first check the front final gear case for oil leakage, remedy it if necessary, and add oil through the filler opening. Use the same type and brand of oil that is already in the final gear case.

- Be sure the O-ring is in place, and tighten the filler cap.

○Apply grease to the O-ring.

Torque - Front Final Gear Case Oil Filler Cap: 29 N·m (3.0 kgf·m, 22 ft·lb)

Front Final Gear Case Oil Change

- Refer to the Front Final Gear Case Oil Change in the Periodic Maintenance chapter.

Variable Differential Control Lever Play Inspection

- Refer to the Variable Differential Control Lever Play Inspection in the Periodic Maintenance chapter.

Variable Differential Control Lever Play Adjustment

- Refer to the Variable Differential Control Lever Play Adjustment in the Periodic Maintenance chapter.

Variable Differential Control Lever Removal

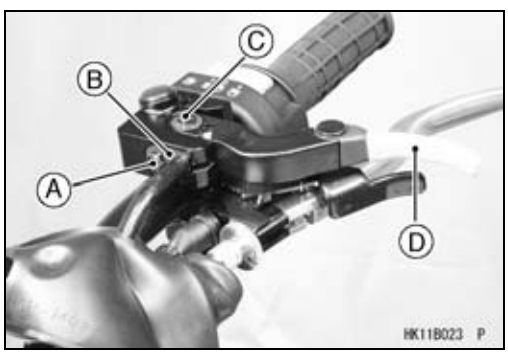

- Remove:
  Handlebar Cover
  Plate Bolt [A]
  Cable Stopper Plate [B]
  Variable Differential Control Lever Bolt [C], Washer and Collar
  Variable Differential Control Lever [D]
  Variable Differential Control Cable Upper End

Variable Differential Control Lever Installation

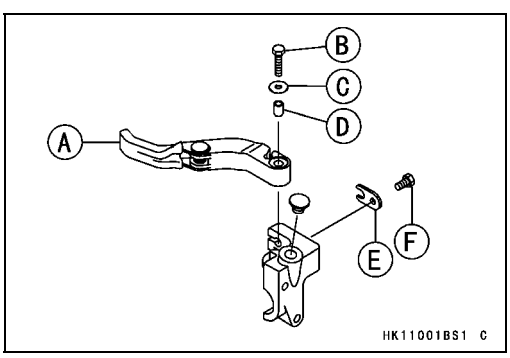

- Install:
  Variable Differential Control Cable Upper End
  Variable Differential Control Lever [A]
- Apply a non-permanent locking agent to the variable differential control lever bolt [B].
- Install:
  Variable Differential Control Lever Bolt, Washer [C] and Collar [D]
- Tighten:
- Install:
  Cable Stopper Plate [E]
  Plate Bolt [F]
- Check the variable differential control lever play (see Variable Differential Control Lever Play Inspection in the Periodic Maintenance chapter).

Front Final Gear Case

Variable Differential Control Cable Installation

- Lubrication the variable differential control cable before installation.
- Route the cable correctly according to the Cable, Wire, and Hose Routing in the Appendix chapter.

⚠ WARNING

Operation with an improperly adjusted, incorrectly routed, or damaged cable could result in an unsafe operating condition.

- Tighten:

  Torque - Variable Differential Control Cable Locknut [A]: 17 N·m (1.7 kgf·m, 12 ft·lb)

- Check the variable differential control lever play (see Variable Differential Control Lever Play Inspection in the Periodic Maintenance chapter).

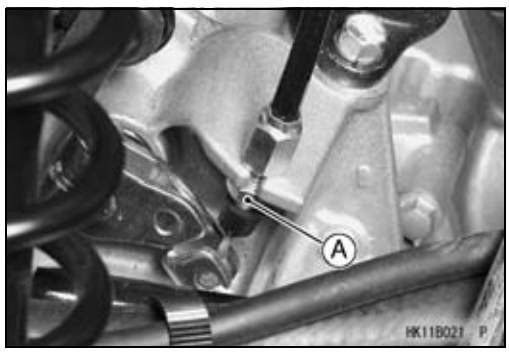

Variable Differential Control Cable Lubrication

Whenever the variable differential control cable is removed, lubricate the cable as follows:

- Apply a small amount of multi-purpose grease to the cable (both ends).
- Lubricate the cable with a penetrating aerosol cable lubricant through the pressure cable luber.

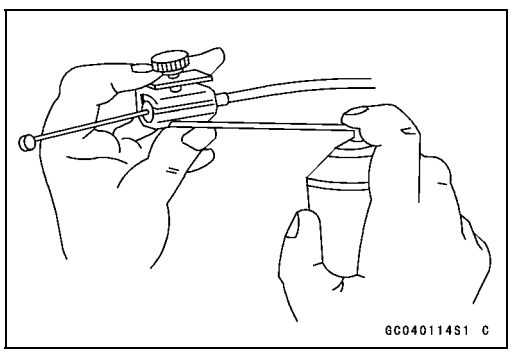

Variable Differential Control Cable Inspection

- With the variable differential control cable disconnected at both ends, the cable should move freely within the cable housing.

★ If the cable does not move freely [A] after lubricating, if the cable is frayed [B], or if the housing is kinked [C], replace the cable.

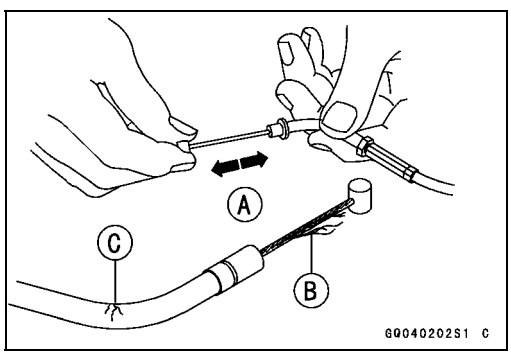

Front Final Gear Case Removal

- Drain the gear case oil (see Front Final Gear Case Oil Change in the Periodic Maintenance chapter).

Front Final Gear Case

- Remove:
  Front Fender (see Front Fender Removal in the Frame chapter)
  Front Wheels (see Wheel Removal in the Wheels/Tires chapter)
  Steering Stem (see Steering Stem Removal in the Steering chapter)
  Front Axles (see Front Axle Removal)
  Right Upper Suspension Arm (see Front Suspension Arm Removal in the Suspension chapter)
  Right Front Shock Absorber (see Front Shock Absorber Removal in the Suspension chapter)
  Front Propeller Shaft (see Front Propeller Shaft Removal)
  Actuator Lead Connector (disconnect)
  Variable Differential Control Cable Lower End
  Air Duct [A]
  Brake Hose Joint Bolt [B]

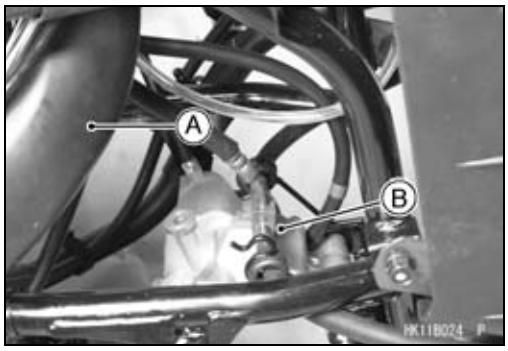

- Remove:
  Front Final Gear Case Bolts [A]

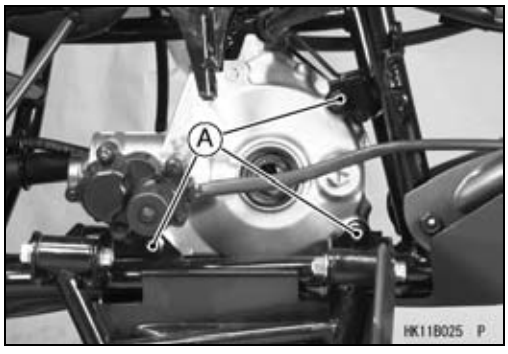

- Remove:
  Bracket Bolts [A]
  Bracket

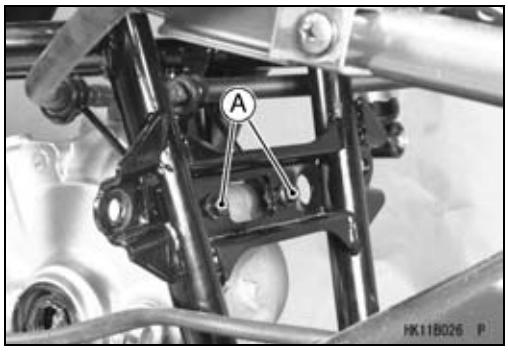

- Remove the rear final gear case [A] as shown.

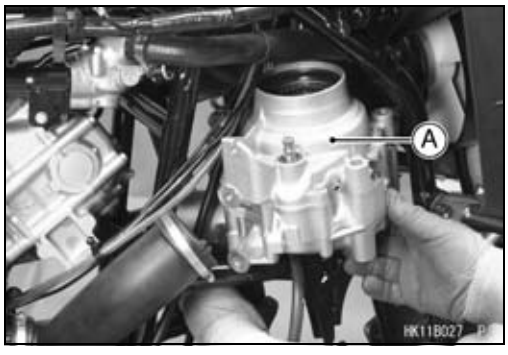

Front Final Gear Case

Front Final Gear Case Installation

- Install the gear case bolts from the vehicle left side.

  Torque - Front Final Gear Case Nuts: 59 N·m (6.0 kgf·m, 43 ft·lb)

- Install the removed parts.

  Torque - Front Final Gear Case Oil Drain Plug: 15 N·m (1.5 kgf·m, 11 ft·lb)

- Fill the front final gear case with the specified oil (see Front Final Gear Case Oil Change in the Periodic Maintenance chapter).

Front Final Gear Case Disassembly

- Remove:
  Front Final Gear Case (see Front Final Gear Case Removal)
  Variable Differential Control Shift Shaft Lever Bolt [A] and Nut [B]
  Variable Differential Control Shift Shaft Lever [C]
  2WD/4WD Actuator (see 2WD/4WD Actuator Removal in the Electrical System chapter)

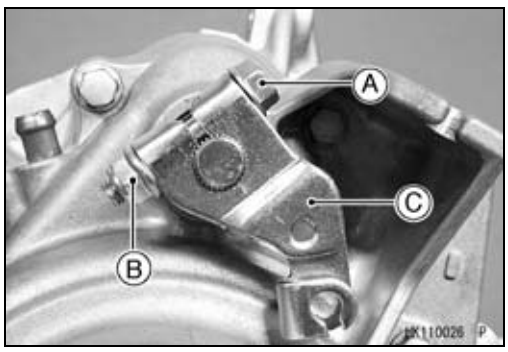

- Hold the front final gear case with the gear holder & socket wrench [A] in a vise.

  Special Tool - Gear Holder & Socket Wrench, Hex 24: 57001-1489

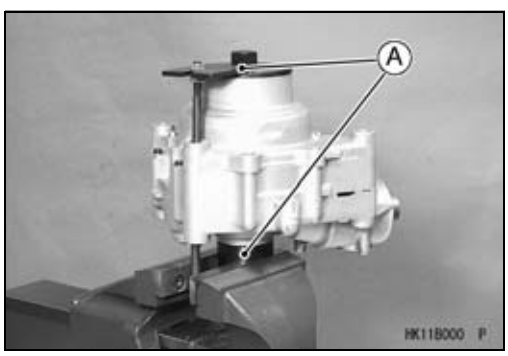

- Remove:
  Front Final Gear Case Coupling Nut [A]
  Washer [B]
  Front Final Gear Case Coupling [C]
  Shifter [D]
  Oil Seals [E]

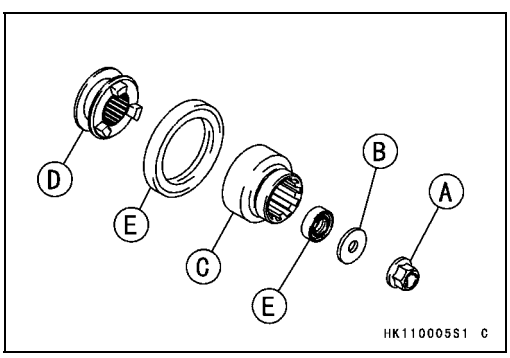

- Remove:
  Front Final Gear Case Left Cover Bolts [A]
  Front Final Gear Case Left Cover [B]
  Variable Differential Control Shift Shaft
  Spring

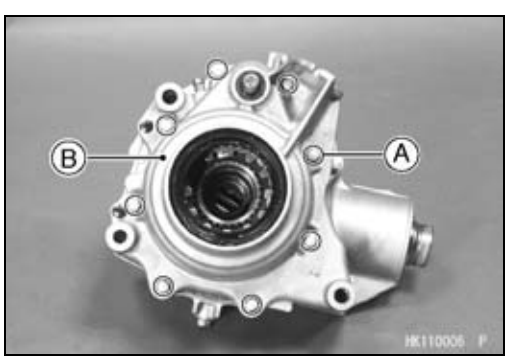

Front Final Gear Case

- Remove:
  Outer Disc [A]
  Needle Bearing

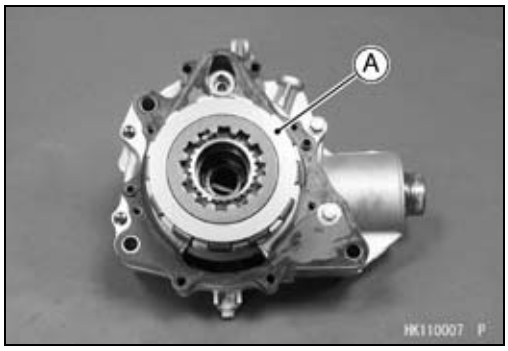

- Remove:
  Housing [A] and Differential Disc Assembly [B]
  Inner Disc
  Needle Bearing

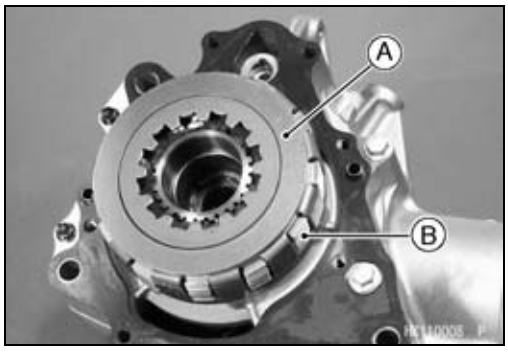

- Remove:
  Cam Plate [A]

- Remove:
  Steel Balls [A]
  Gasket [B]
  Dowel Pins [C]
  Front Final Gear Case Center Cover Bolts (M6) [D]
  Front Final Gear Case Center Cover Bolts (M8) [E]
  Front Final Gear Case Center Cover [F]

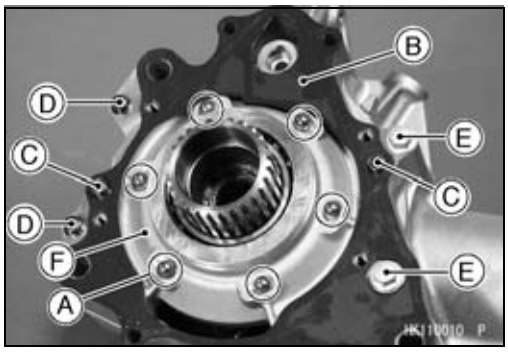

- Remove:
  Ring Gear Assembly [A]
  Shim(s) [B]

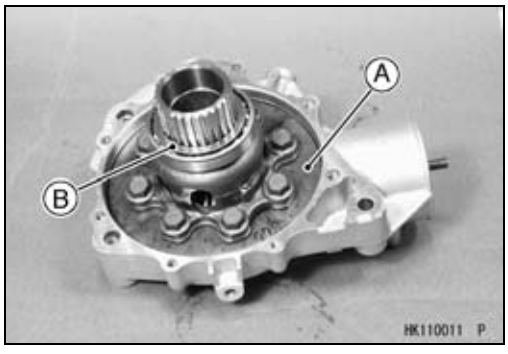

Front Final Gear Case

- Hold the front final gear case right cover [A] in a vise, and remove the bearing holder using the socket wrench [B].

  Special Tool - Socket Wrench, Hex 41: 57001-1484

○If the holder seems too difficult to break free, apply heat to softer the locking agent.

- Remove:
  Pinion Gear Bearing Holder

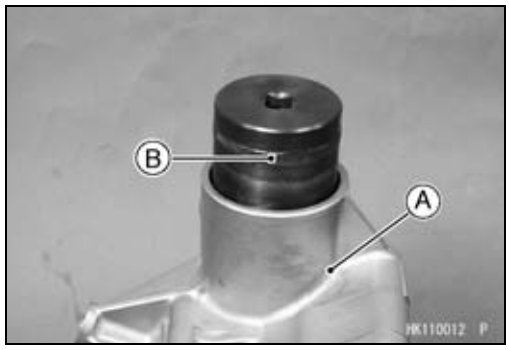

- Remove:
  Pinion Gear Unit [A]
  Shim(s)

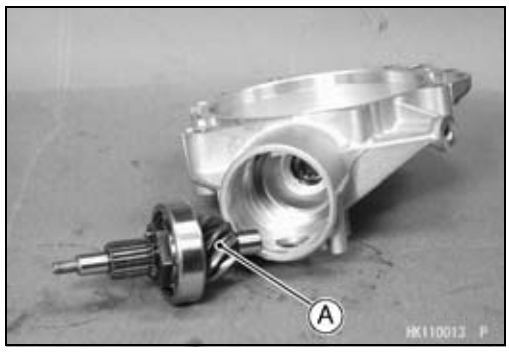

Front Final Gear Case Coupling Inspection

★If the coupling bushing [A] is damaged or worn, replace the front final gear case coupling.

Front Final Gear Case Coupling Bushing Inside Diameter [B]

Standard: 13.000 ~ 13.018 mm (0.5118 ~ 0.5125 in.)

Service Limit: 13.048 mm (0.5137 in.)

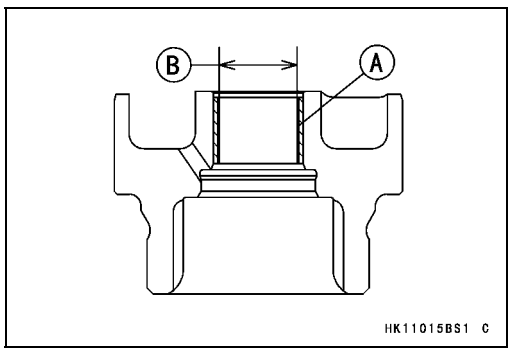

Front Final Gear Case Assembly

- Install:
  Ball Bearing [A]
  Needle Bearing [B]

○Press the ball bearing and needle bearing until they are bottomed.

- Install:
  Circlip [C]

  Special Tool - Inside Circlip Pliers: 57001-143

- Install:
  Oil Seal [D]

○Insert the oil seal so that the rubber surface is flush [E] with the end of hole.

○Apply grease to the oil seal lip.

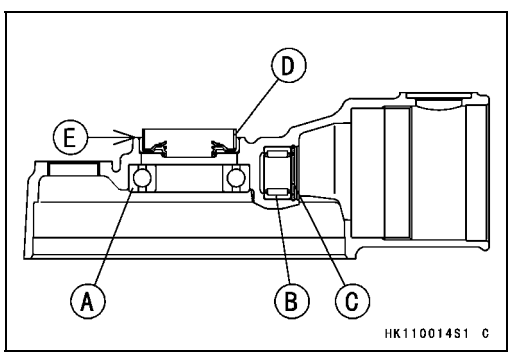

- Visually check the pinion gear and ring gear for scoring, chipping, or other damage.

★Replace the bevel gear as a set if either gear is damaged since they are lapped as a set in the factory to get the best tooth contact.

- Insert the pinion gear in the front final gear case right cover.

Front Final Gear Case

- Install:
  Ring Gear Assembly
- Apply grease to the O-ring [A] on the front final gear case center cover.

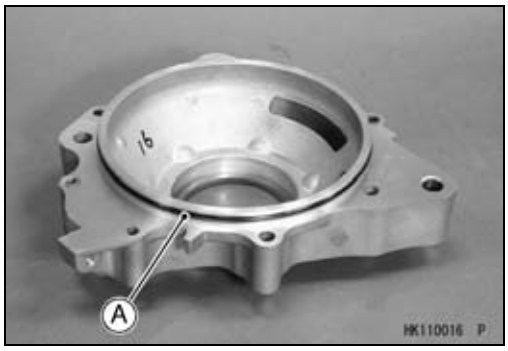

- Install:
  Front Final Gear Case Center Cover [A]
- Tighten the cover bolts following the tightening sequence as shown.

  Torque - Front Final Gear Case Center Cover Bolts (M8) [1, 3]: 24 N·m (2.4 kgf·m, 17 ft·lb)
  Front Final Gear Case Center Cover Bolts (M6) [2, 4]: 9.8 N·m (1.0 kgf·m, 87 in·lb)

- Adjust the gear backlash and tooth contact pattern (see Front Final Bevel Gear Adjustment).
- Apply a non-permanent locking agent to the cover bolts, and tighten them to the specified torque in the tightening sequence [1 ~ 4].

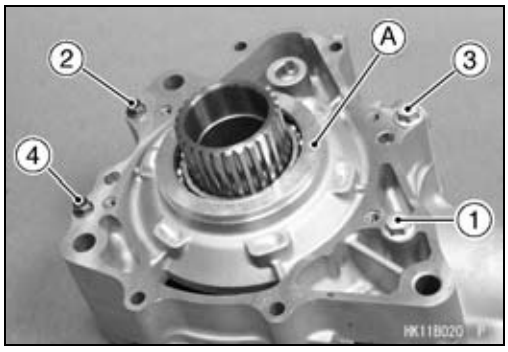

- Apply a non-permanent locking agent to the pinion gear bearing holder [A], and tighten it so that the deep recess [B] faces outward.

  Special Tool - Socket Wrench, Hex 41: 57001-1484

  Torque - Pinion Gear Bearing Holder: 137 N·m (14 kgf·m, 101 ft·lb)

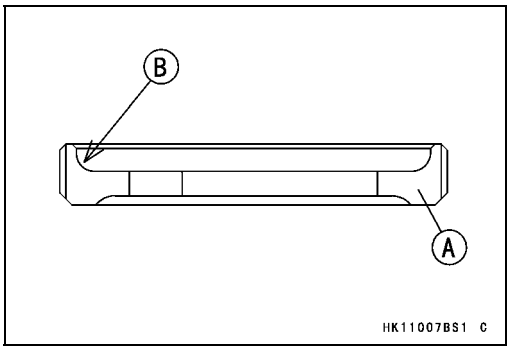

- Install:
  Dowel Pins [A]
  New Gasket [B]
  Steel Balls [C]

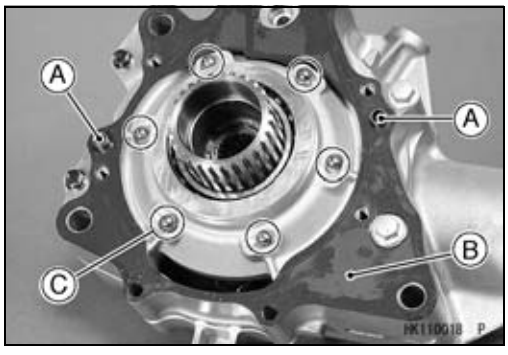

Front Final Gear Case

- Install:
  Cam Lever [A]
  Needle Bearing [B]
- Apply engine oil to the needle bearing.

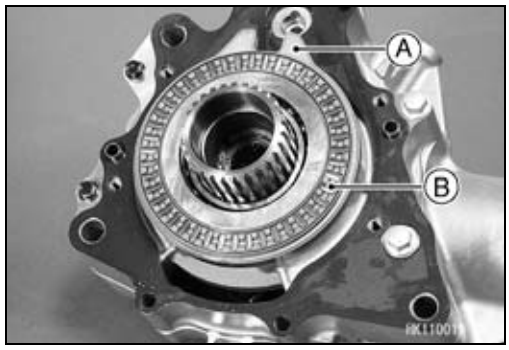

- Check the wear of the disc assembly as follows.

○Measure the thickness of the inner disc [A].

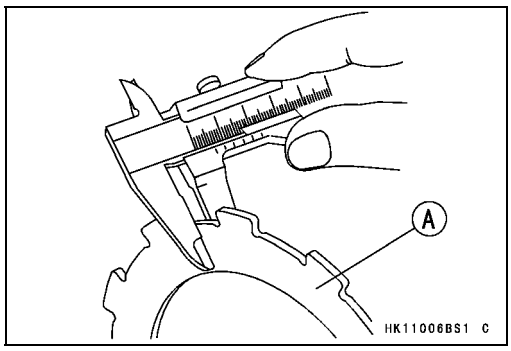

- Select the width [A] of the disc assembly [B] in accordance with the thickness of the inner disc, refer to the below table.

Thickness of Inner Disc Assembly	Width [A] of Disc Assembly
2.4 mm (0.0945 in.)	16.7 ~ 17.3 mm (0.6675 ~ 0.6811 in.)
1.8 mm (0.0709 in.)	17.31 ~ 17.9 mm (0.6815 ~ 0.7047 in.)
1.2 mm (0.0472 in.)	17.91 ~ 18.5 mm (0.7051 ~ 0.7283 in.)

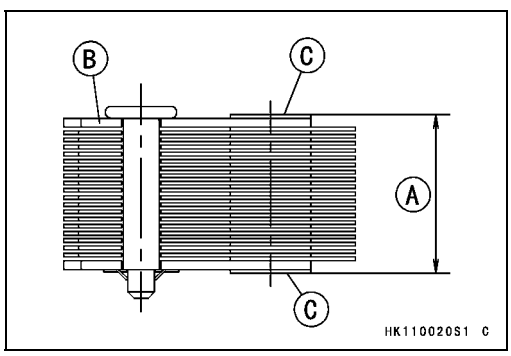

○Measure the width of the disc assembly at three locations, and calculate average for three points.

NOTE

○*Be careful not to damage the facing surface [C] on the outer plates.*

★If the width is within the specified range, install the inner disc and disc assembly.

★If the width is not within the specified range, replace the disc assembly.

- Install:
  Inner Disc [A]
  Disc Assembly [B] and Housing [C]

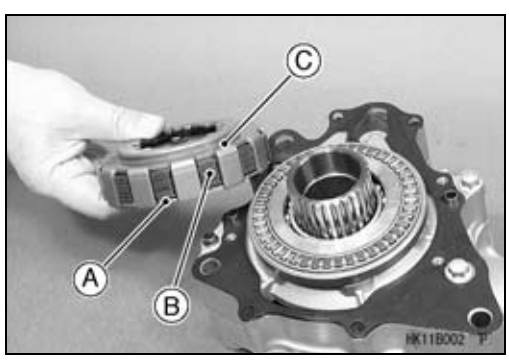

Front Final Gear Case

- Apply engine oil to the needle bearing [A].
- Install:
  Needle Bearing
  Outer Disc [B]

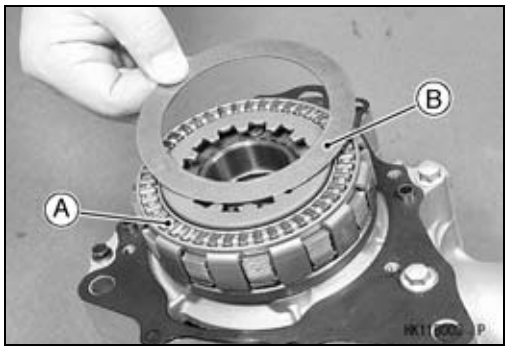

- Apply engine oil to the variable front differential control shift shaft [A].
- Install the shaft and spring [B] in the front final gear case left cover [C] as shown.

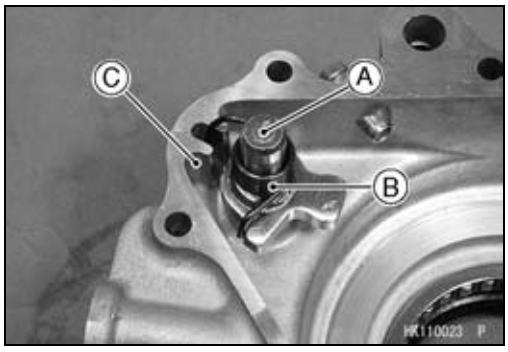

- Turn the shaft counterclockwise and insert the tab [A] of the shift shaft into the groove [B] of the cam plate.
- Install:
  Front Final Gear Case Left Cover [C]

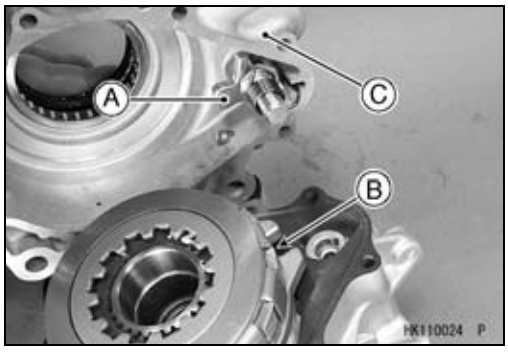

- Apply a non-permanent locking agent to the cover bolts [1 ~ 4], and tighten them following the tightening sequence as shown.

Torque - Front Final Gear Case Left Cover Bolts (M6)
[1 ~ 8]: 9.8 N·m (1.0 kgf·m, 87 ft·lb)

[1 ~ 4] L = 60 mm (2.4 in.)
[5 ~ 8] L = 30 mm (1.2 in.)

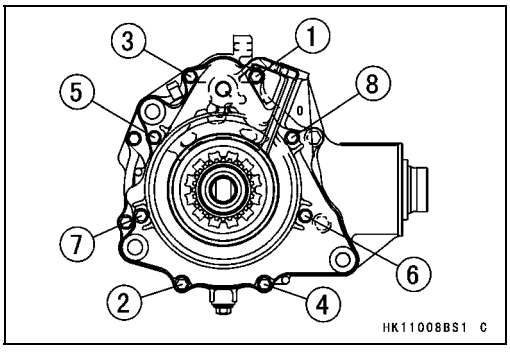

- Apply grease to the oil seal lip [A].
- Press the oil seal [B] in the coupling [C] to the specified position as shown.
  [D] 1 mm (0.04 in.)

Special Tools - Oil Seal Driver, ϕ18.5: 57001-1505
Driver Holder: 57001-1132

NOTE

○*57001-1132 is included in Bearing Driver Set, 57001 -1129.*

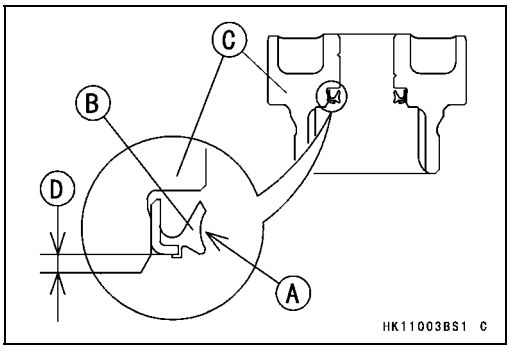

Front Final Gear Case

- Apply molybdenum disulfide grease to the spline [A] of the shifter [B] and inner surface [C] of the coupling.
- Install the shifter and coupling on the pinion gear shaft [D].
- Apply grease to the oil seal lip [E].
- Press the oil seal [F] in the front final gear case so that the oil seal surface is flush [G] with the case end.

Special Tool - Oil Seal Driver, ϕ70: 57001-1506

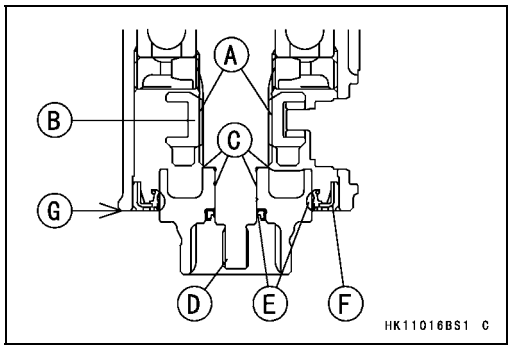

- Hold the front final gear case with the gear holder & socket wrench [A] in a vise.

Special Tool - Gear Holder & Socket Wrench, Hex 24: 57001-1489

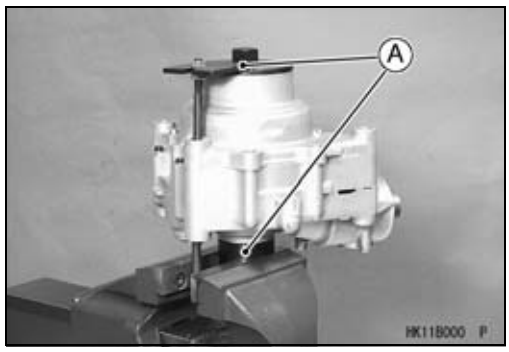

- Install:
  Washer [A]
  Front Final Gear Case Coupling Nut [B]
- Tighten:

Torque - Front Final Gear Case Coupling Nut: 25 N·m (2.5 kgf·m, 18 ft·lb)

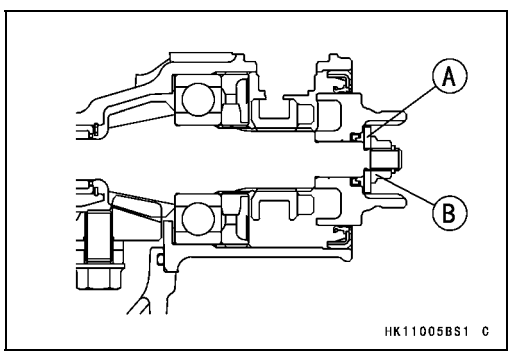

- Install the variable differential control shift shaft lever [A] on the shift shaft [B] so that the punch mark [C] on the lever aligns with the punch mark [D] on the shaft as shown.
  [E] 45.8 ~ 50.4 mm (1.803 ~ 1.984 in.)
- Tighten:

Torque - Variable Differential Control Shift Shaft Lever Bolt [F]: 8.8 N·m (0.90 kgf·m, 78 in·lb)
2WD/4WD Actuator Mounting Bolts: 9.8 N·m (1.0 kgf·m, 87 in·lb)

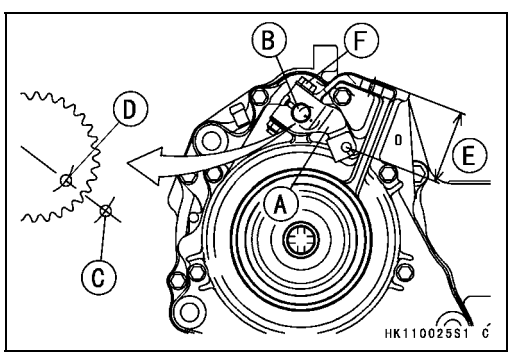

Oil Seal Installation

- Press the oil seal [A] in the front final gear case left cover [B] to the dimension as shown.
  [C] 4.6 ~ 5.6 mm (0.18 ~ 0.22 in.)

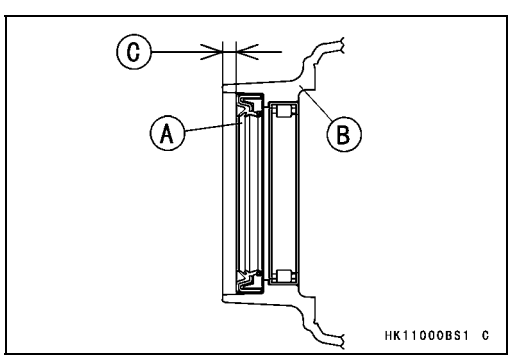

Front Final Gear Case

Ring Gear Disassembly

- Remove:
  Ring Gear Assembly (see Front Final Gear Case Disassembly)
  Ring Gear Bolts [A]
  Ring Gear [B]

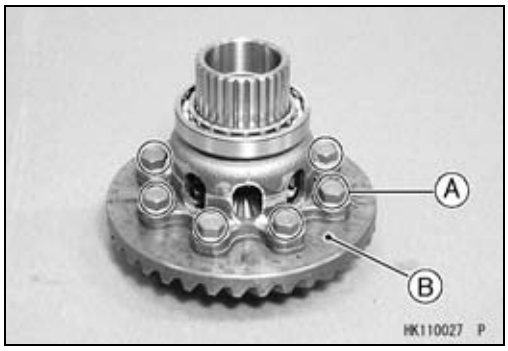

- Remove:
  Differential Gear Case Cover [A]
  Right Side Gear (16T) [B]
  Pins [C]
  Spider Gear Shaft [D]
  Spider Gears (10T) [E]
  Left Side Gear (16T) [F]
  Left Differential Gear Case [G]

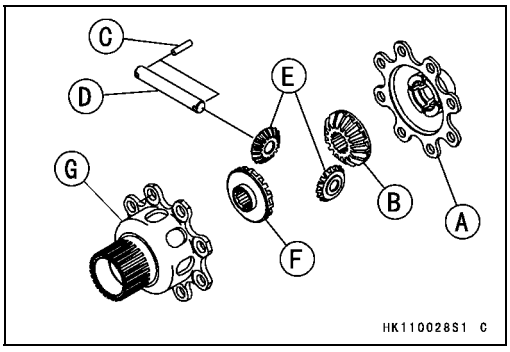

Ring Gear Assembly

- Press the bearing [A] on the left differential gear case [B] until it is bottomed.
- Apply engine oil [C] to the spider gears and the spider gear shaft.
- Apply molybdenum disulfide grease [D] to the left side gear (16T) [E].
- Install:
  Left Side Gear (16T)
  Spider Gears (10T) [F]
  Spider Gear Shaft [G] and Pins [H]

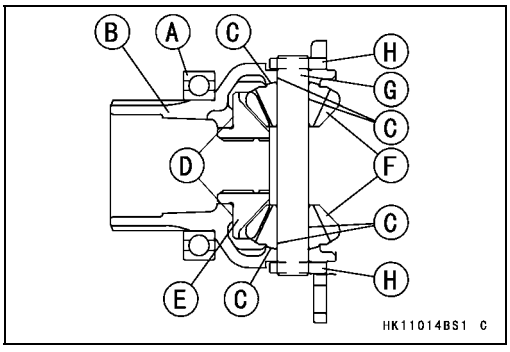

- Apply engine oil [A] to the spider gears.
- Apply molybdenum disulfide grease [B] to the right side gear (16T) [C].
- Install:
  Right Side Gear (16T)
  Differential Gear Case Cover [D]
  Ring Gear [E]
- Apply a non-permanent locking agent (Three Bond: TB2471 Blue) to the ring gear bolts [F], and tighten them.

Torque - Ring Gear Bolts: 57 N·m (5.8 kgf·m, 42 ft·lb)

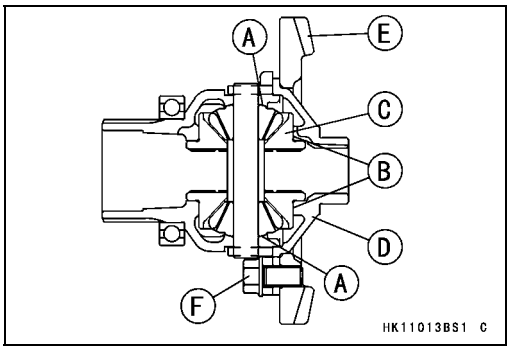

NOTE

○*Keep the ring gear assembly at more than 20°C (68°F) for six hours after tightening the bolts.*

Front Final Gear Case

LSD Clutch Torque Inspection

★If the vehicle has the following symptoms, check the LSD (Limited Slip Differential) clutch torque.
-The handlebar is hard to turn.
-The front final gear case overheats.
-Abnormal noises come from the front final gear case when rounding a curve.

- Ensure 2WD mode.
- Support the vehicle so that the front wheels are off the ground.
- Remove:
  One Front Wheel (see Wheel Removal in the Wheels/Tires chapter)
  Front Axle Nut Cotter Pin
- Secure the other-side front wheel from rotating.
- Measure the clutch torque using a torque wrench [A]. Turn the wrench evenly.

○The clutch torque is the mean torque reading during about a quarter turn of the wrench.

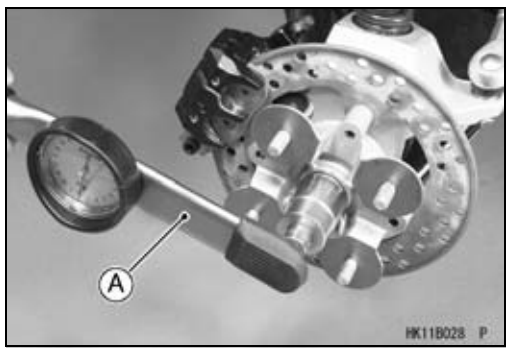

LSD Clutch Torque
(When variable differential control lever is released.)
Standard: 15 ~ 20 N·m (1.5 ~ 2.0 kgf·m, 11 ~ 14 ft·lb)

LSD Clutch Torque
(When variable differential control lever is pulled in.)
Standard: 157 N·m (16 kgf·m, 116 ft·lb) or more

★If the clutch torque is out of the specified range, check the width of the disc assembly (see Front Final Gear Case Assembly).

NOTE

○*The correct type of oil must be installed.*

Pinion Gear Unit Disassembly

- Remove:
  Pinion Gear Unit (see Front Final Gear Case Disassembly)
- Pry open the staking of the pinion gear bearing holder nut with a small chisel.
- Hold the pinion gear unit [A] with the pinion gear holder [B] in a vise, and remove the pinion gear bearing holder nut [C].

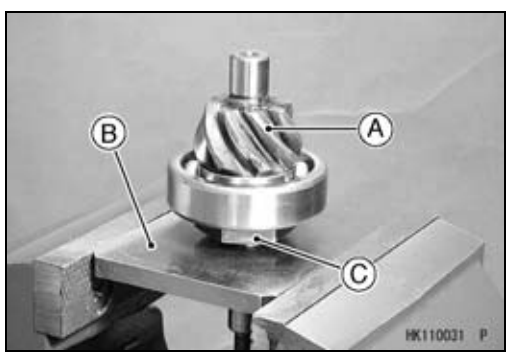

Special Tool - Pinion Gear Holder, m1.0: 57001-1485

- Remove the ball bearing only if required.

Special Tool - Bearing Puller: 57001-135

Front Final Gear Case

Pinion Gear Unit Assembly

○The pinion gear and ring gear are lapped as a set in the factory to get the best tooth contact. They must be replaced as a set.

- Visually inspect the bearing for abrasion, color change, or other damage.

★If there is any doubt as to the condition of a bearing, replace the bearing.

- Be sure to check and adjust the bevel gear backlash and tooth contact, when any of the backlash-related parts are replaced (see Front Final Bevel Gear Adjustment).
- Press the bearing on the pinion gear until it is bottomed.

- Install the pinion gear bearing holder nut [A] so that the projection [B] faces outward.
- Tighten:

Special Tool - Pinion Gear Holder, m1.0: 57001-1485

Torque - Pinion Gear Bearing Holder Nut: 127 N·m (13 kgf·m, 94 ft·lb)

- Stake [C] the nut with a punch at three positions to secure it.

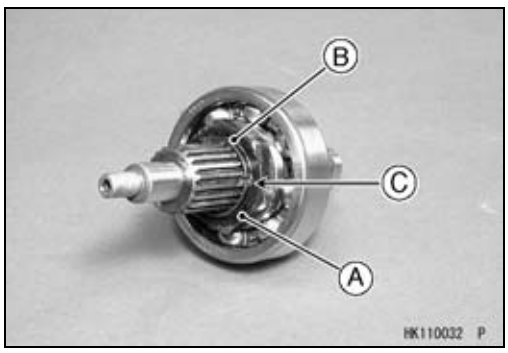

Front Final Bevel Gear Adjustment

The **backlash** (distance one gear will move back and forth without moving the mate gear) and **tooth contact pattern** of the bevel gears must be correct to prevent the gears from making noise and being damaged.

Above two adjustments are of critical importance and must be carried out following the correct sequence and method.

- When any one of the backlash-related parts are replaced, check and adjust the bevel gear backlash, and tooth contact by replacing shims.

○The amount of backlash is influenced by the ring gear position more than by the pinion gear position.

○Tooth contact location is influenced by the pinion gear position more than by the ring gear position.

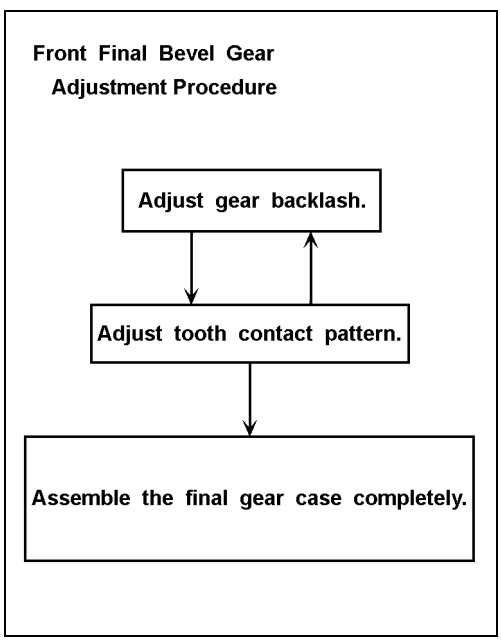

Front Final Gear Case

Front Final Gear Case (Backlash-related Parts)

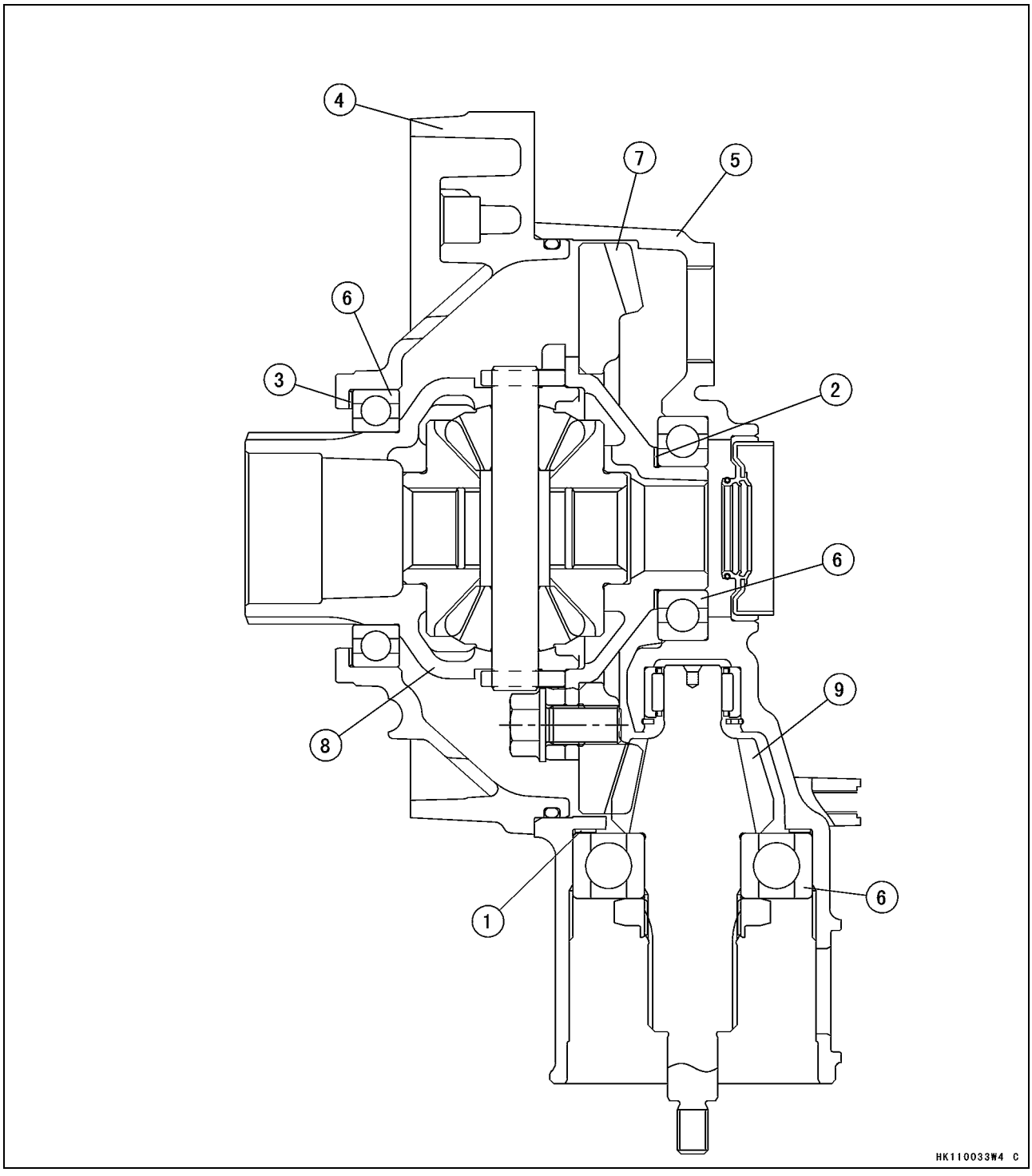

1. Pinion Gear Shim(s)
2. Ring Gear Right Shim(s)
3. Ring Gear Left Shim(s)
4. Front Final Gear Case Center Cover
5. Front Final Gear Case Right Cover
6. Ball Bearings
7. Ring Gear
8. Ring Gear Assembly
9. Pinion Gear

Front Final Gear Case

1. Pinion Gear Shims for Backlash Adjustment

Thickness	Part Number
0.15 mm (0.006 in.)	92180-1408
0.2 mm (0.008 in.)	92180-1409
0.5 mm (0.020 in.)	92180-1410
0.7 mm (0.028 in.)	92180-1411
0.8 mm (0.031 in.)	92180-1412
0.9 mm (0.035 in.)	92180-1413
1.0 mm (0.039 in.)	92180-1414
1.1 mm (0.043 in.)	92180-1415
1.2 mm (0.047 in.)	92180-1416

2. Ring Gear Right Shims for Tooth Contact Adjustment

Thickness	Parts Number
0.15 mm (0.006 in.)	92180-1399
0.2 mm (0.008 in.)	92180-1400
0.5 mm (0.020 in.)	92180-1401
0.7 mm (0.028 in.)	92180-1402
0.8 mm (0.031 in.)	92180-1403
0.9 mm (0.035 in.)	92180-1404
1.0 mm (0.039 in.)	92180-1405
1.1 mm (0.043 in.)	92180-1406
1.2 mm (0.047 in.)	92180-1407

3. Ring Gear Left Shims for Tooth Contact Adjustment

Thickness	Parts Number
0.15 mm (0.006 in.)	92180-1390
0.2 mm (0.008 in.)	92180-1391
0.5 mm (0.020 in.)	92180-1392
0.7 mm (0.028 in.)	92180-1393
0.8 mm (0.031 in.)	92180-1394
0.9 mm (0.035 in.)	92180-1395
1.0 mm (0.039 in.)	92180-1396
1.1 mm (0.043 in.)	92180-1397
1.2 mm (0.047 in.)	92180-1398

Backlash Adjustment

- Check and adjust the gear backlash when any of the backlash-related parts are replaced with new ones.
- Clean any dirt and oil off the bevel gear teeth.
- Assemble the front final gear case (see Front Final Gear Case Assembly).

○It is not necessary to install the variable front differential control unit.

○Check the backlash during tightening of the front final gear case center cover bolts and stop tightening them immediately if the backlash disappears. Then, change the ring gear shim to a thicker one.

- Temporarily, install the right front axle in the gear case and hold it in a vise so that the ring gear is lower than the pinion gear.

Front Final Gear Case

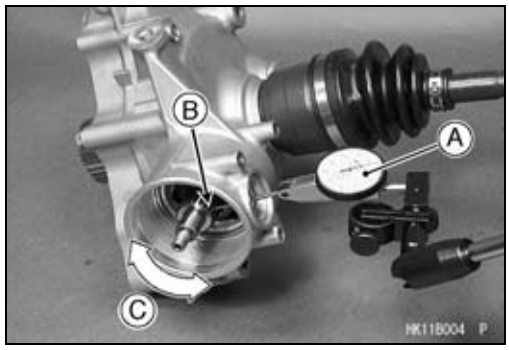

- Mount a dial gauge [A] so that the tip of the gauge is against the splined portion [B] of the pinion gear shaft.
- To measure the backlash, move the pinion gear shaft back and forth [C] while holding the front axle steady. The difference between the highest and the lowest gauge reading is the amount of backlash.

○Measure backlash at three locations equally spaced on the splines.

Front Final Bevel Gear Backlash
Standard: 0.10 ~ 0.20 mm (0.004 ~ 0.008 in.) (at pinion gear spline)

★If the backlash is not within the limit, replace the pinion gear shims. To increase backlash, increase the thickness of the shim(s). To decrease backlash, decrease the thickness of the shim(s).

○Change the thickness a little at a time.

- Recheck the backlash, and readjust as necessary.

Tooth Contact Adjustment

- Clean any dirt and oil off the bevel gear teeth.
- Apply checking compound to 4 or 5 teeth on the pinion gear.

NOTE

○*Apply checking compound to the teeth in a thin, even coat with a fairly stiff paint brush. If painted too thickly, the exact tooth pattern may not appear.*

○*The checking compound must be smooth and firm, with the consistency of tooth paste.*

○*Special compounds are available from automotive supply stores for the purpose of checking differential gear tooth patterns and contact. Use one of these for checking the bevel gears.*

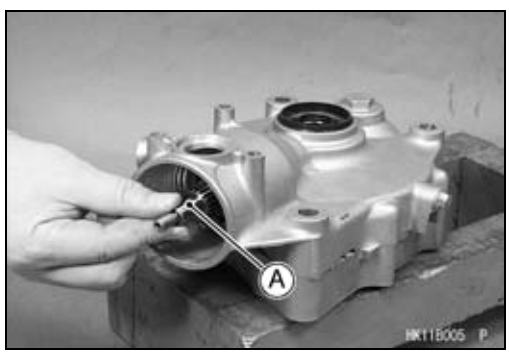

- Assemble the front final gear case (see Front Final Gear Case Assembly).

○It is not necessary to install the variable front differential control unit.

- Turn the pinion gear shaft [A] for one revolution in the drive and reverse (coast) direction, while creating a drag on the ring gear.
- Remove the ring gear and pinion gear unit to check the drive pattern and coast pattern of the bevel gear teeth.

○The tooth contact patterns of both (drive and coast) sides should be centrally located between the top and bottom of the tooth. The drive pattern can be a little closer to the toe and the coast pattern can be a somewhat longer and closer to the toe.

★If the tooth contact pattern is incorrect, replace the ring gear shim(s), following the examples shown.

● Then erase the tooth contact patterns and check them again. Also check the backlash every time the shim(s) are replaced. Repeat the shim change procedure as necessary.

NOTE

○*If the backlash is out of the standard range after changing the ring gear shim(s), change the pinion gear shim(s) to correct the backlash before checking the tooth contact pattern.*

Bevel Gear Inspection

● Visually check the bevel gears [A] for scoring, chipping, or other damage.

★Replace the bevel gears as a set if either gear is damaged.

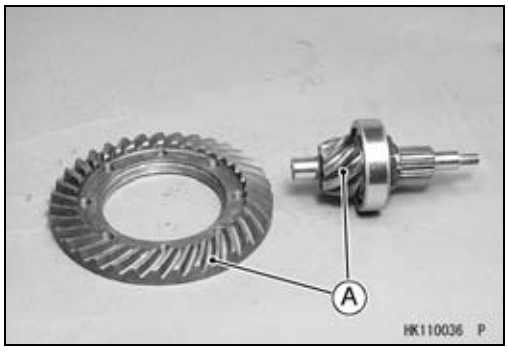

Differential Gear Inspection

● Visually check the differential gears [A] for scoring, chipping, or other damage.

★Replace the differential gears as a set if either gear is damaged.

● Also, inspect the differential gear shaft [B], gear case [C], and cover [D] where the differential gears rub.

★If they are scored, discolored, or otherwise damaged, replace them as a set.

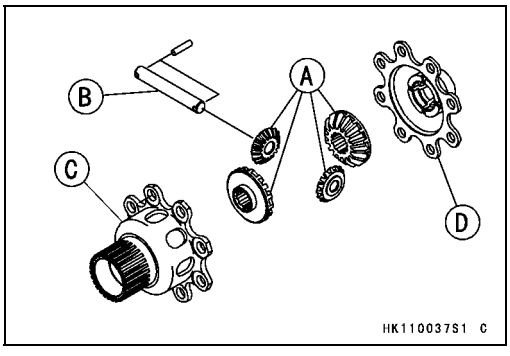

Front Final Gear Case

Correct Tooth Contact Pattern: No adjustment is required.

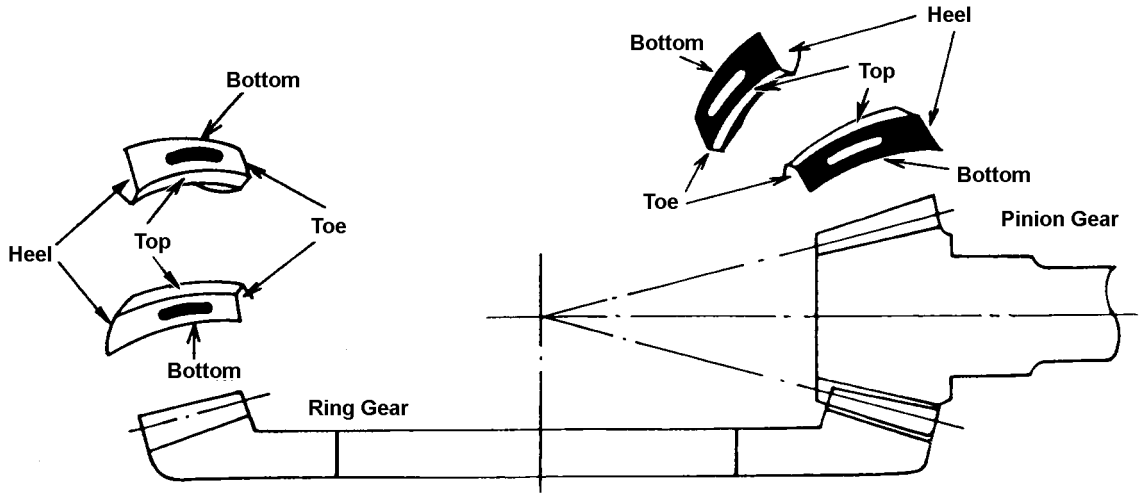

Incorrect Tooth Contact Patterns

Example 1 : Decrease the thickness of the ring gear shim(s) by 0.1 mm (0.004 in.) to correct the pattern shown below. Repeat in 0.1 mm (0.004 in.) steps if necessary.

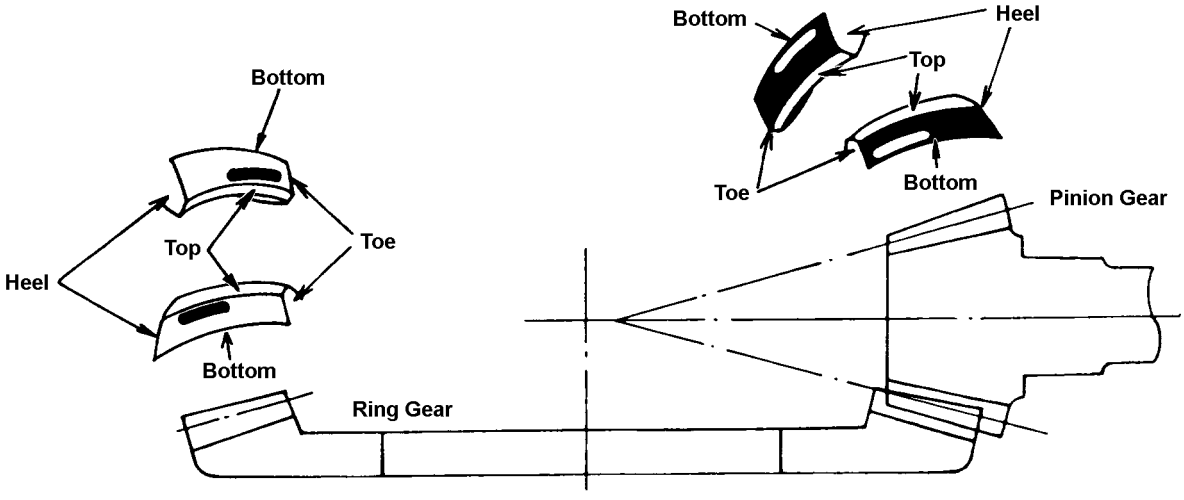

Example 2 : Increase the thickness of the ring gear shim(s) by 0.1 mm (0.004 in.) to correct the pattern shown below. Repeat in 0.1 mm (0.004 in.) steps if necessary.

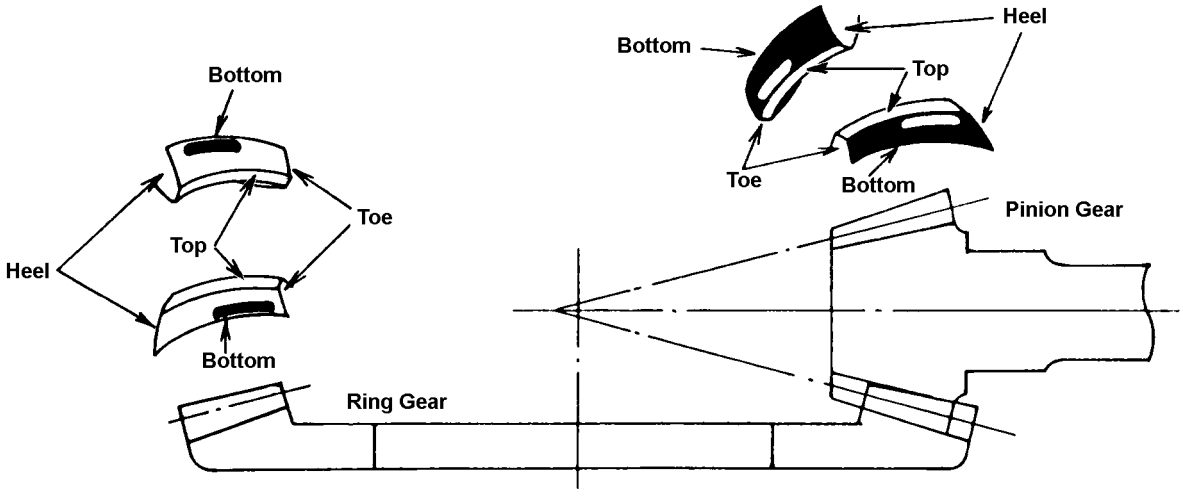

Rear Propeller Shaft

Rear Propeller Shaft Removal

- Remove:
  Footboard (see Left and Right Footboard Removal in the Frame chapter)
- Slide the rubber boots [A].
- Push the front universal joint [B] rearward, and remove the front end [C] from the engine.

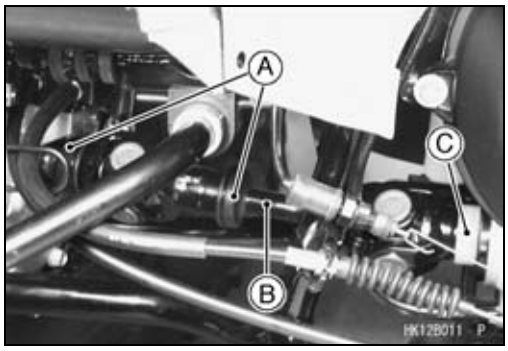

- Remove the rear propeller shaft [A] from the vehicle.

Rear Propeller Shaft Installation

- Wipe off any old grease:
  Splines [A] of Propeller Shaft and Universal Joint Output Shaft of Engine
  Pinion Gear of Rear Final Gear Case
- Inspect O-rings [B] and boots [C] for damage.

★If any doubt exists, replace it with a new one.

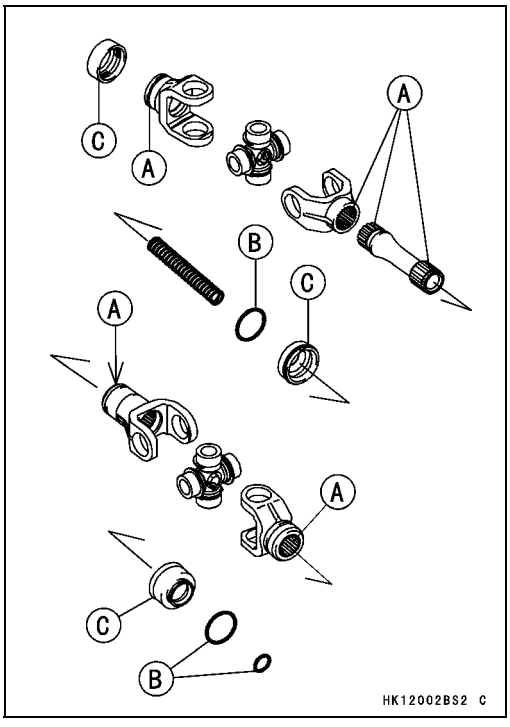

- Apply molybdenum disulfide grease:
  Spline [A] and Inside [B] of Propeller Shaft [C]
- Install:
  Boots [D]

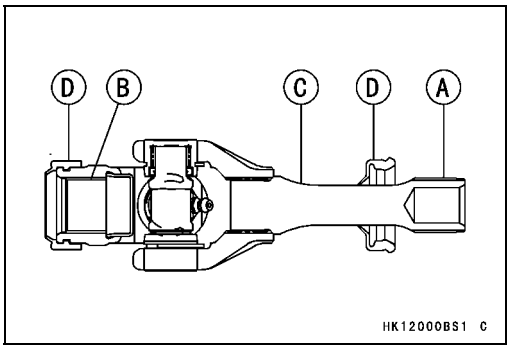

Rear Propeller Shaft

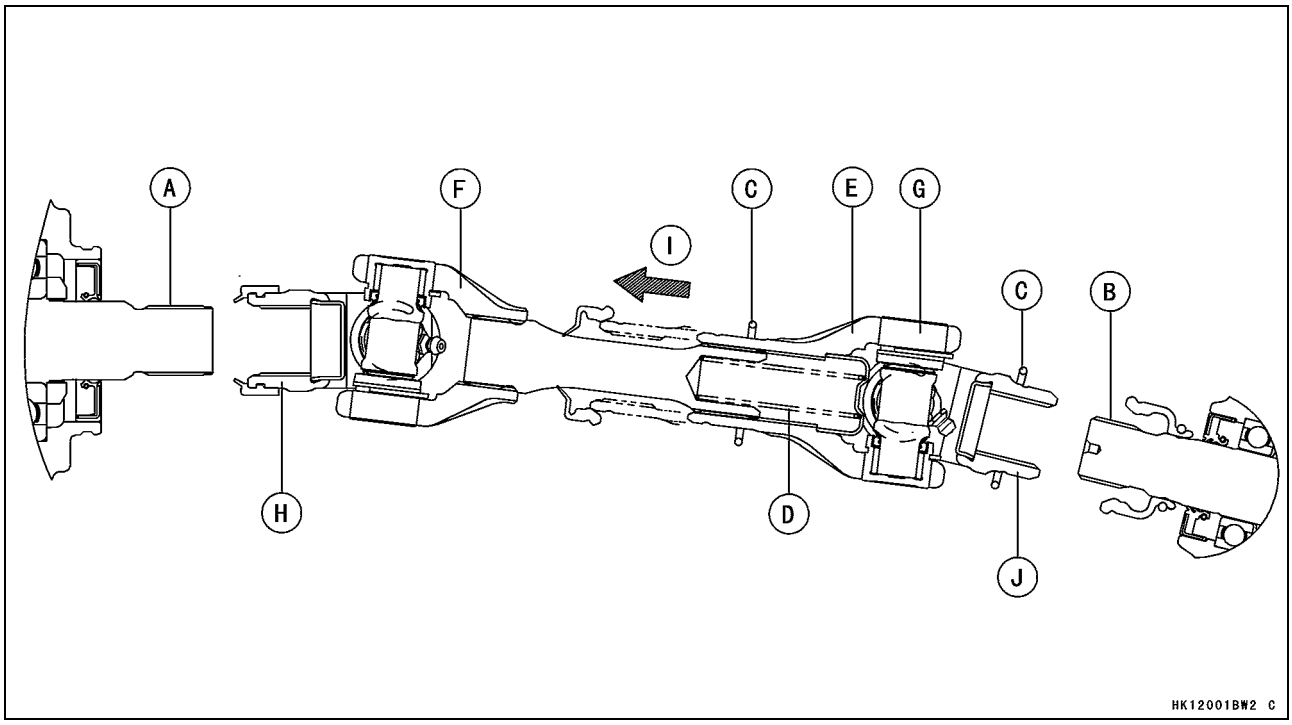

- Apply molybdenum disulfide grease:
  Spline [A] on Output Shaft of Engine
  Spline [B] on Pinion Gear of Rear Final Gear Case
- Install:
  O-rings [C]
  Spring [D]
  Rear Universal Joint [E]
- Align the front universal joint yoke [F] with the rear universal joint yoke [G] as shown.
- Install the front end [H] of the propeller shaft.
- Push the rear universal joint forward [I], and install the rear end [J] of the rear universal joint on the pinion gear of rear final gear case.
- Install the rubber boots and fit the O-rings in the groove of the boots.

Rear Propeller Shaft Joint Boot Inspection

- Refer to the Rear Propeller Shaft Joint Boot Inspection in the Periodic Maintenance chapter.

Rear Propeller Shaft Inspection

- Remove the rear propeller shaft (see Rear Propeller Shaft Removal).
- Check that the universal joints [A] work smoothly without rattling or sticking.

★If it does rattle or stick, the universal joint is damaged. Replace the propeller shaft with a new one.

- Visually inspect the splines [B] on the propeller shaft.

★If they are badly worn, chipped, or loose, replace the propeller shaft.

- Also, inspect the splines on the rear end of the output shaft and the pinion gear in the final gear case.

★If splines are badly worn, chipped, or loose, replace the output shaft and the pinion gear.

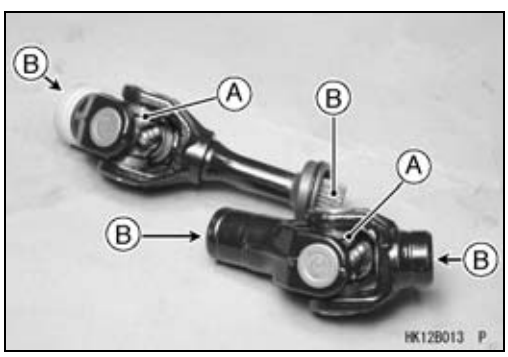

Rear Axle

Rear Axle Removal

- Drain the rear final gear case oil (see Rear Final Gear Case Oil Change in the Periodic Maintenance chapter).
- Remove:
  Rear Wheels (see Wheel Removal in the Wheels/Tires chapter)
  Rear Knuckle (see Rear Suspension Arm Removal in the Suspension chapter)
  Upper Suspension Arm [A] (see Rear Suspension Arm Removal in the Suspension chapter)

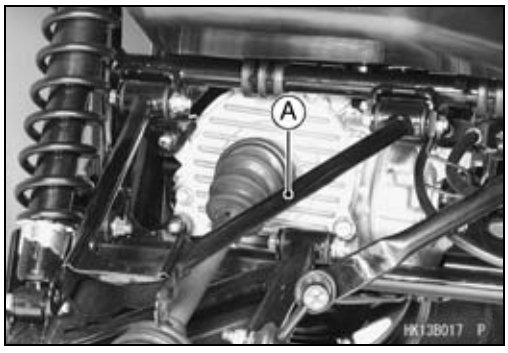

- Pull the rear axle [A] in a straight line out of the rear final gear case.

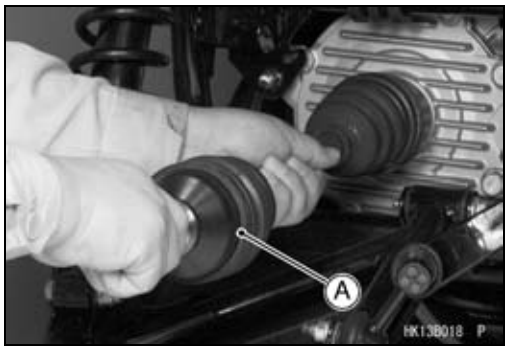

Rear Axle Installation

- Wipe off any old grease:
  Splines [A] of Axle
  Gear Case Oil Seal [B]
- Visually inspect the splines of the axle.
- ★If they are badly worn or chipped, replace the axle with a new one.
- Apply molybdenum disulfide grease to the axle splines.
- Apply grease top the gear case oil seal.

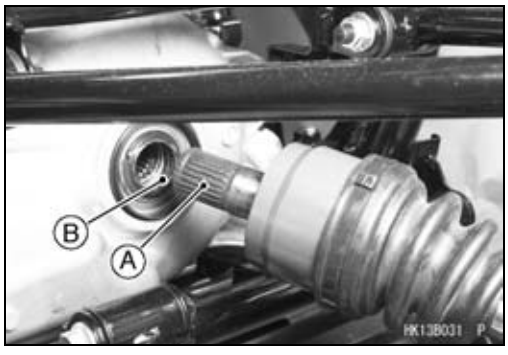

- Tap [A] the end of the rear axle straight and install the rear axle.

NOTE

○*The axle shaft must not come off easily.*

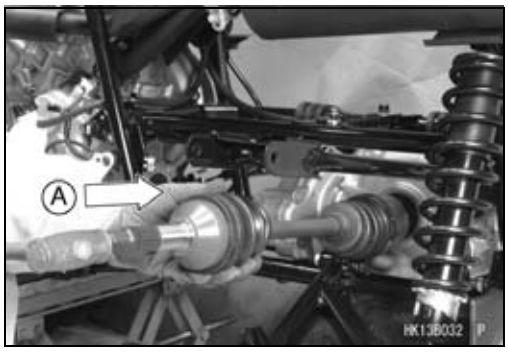

Rear Axle Joint Boot Inspection

- Refer to the Axle Joint Boot Inspection in the Periodic Maintenance chapter.

Rear Axle

Rear Axle Joint Boot Replacement

Outboard Joint Boot Removal

- Remove:
  Rear Axle (see Rear Axle Removal)
  Boot Bands [A]
- Scrap the removed boot bands.
- Slide the joint boot [B] toward the inboard joint.

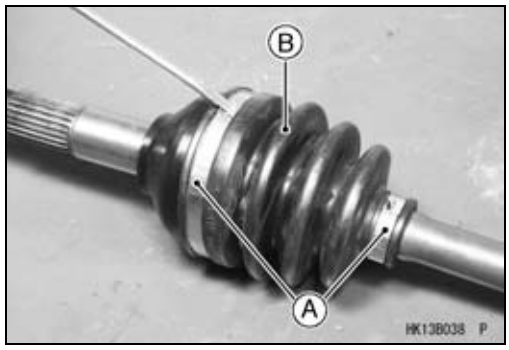

- Tap the bearing housing [A] straight [B] with a plastic hammer to separate it from the shaft.

CAUTION
Do not tap on the cage. Be careful not get hurt when the housing comes out. If the splined portion of shaft cracked or damaged during disassembling of outboard joint, do not reuse the shaft.

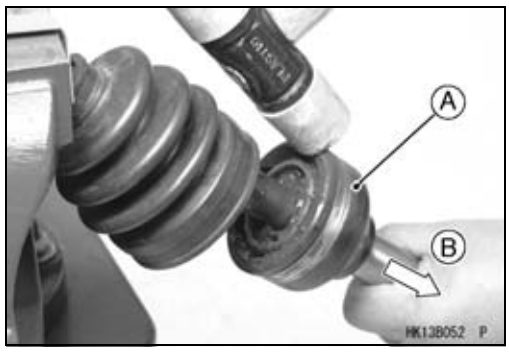

- Remove:
  Circlip [A]
  Boot [B]
  Small Band [C]

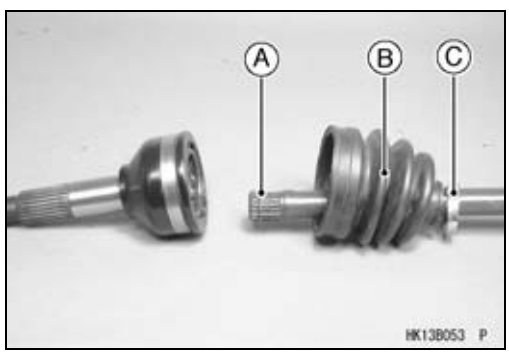

Outboard Joint Boot Installation

- Clean the axle shaft by wiping off the used grease on it.
- Wind the tape on the splines of the axle shaft in order to protect the joint boot.
- Install:
  New Small Band [A]
  New Boot [B]

○Apply the special grease slightly on the inside of the new boot small diameter, and install the boot on the axle shaft.

CAUTION
Only the special grease that is included with the boot kit can be applied to the boots.

- Install:
  New Circlip [C]

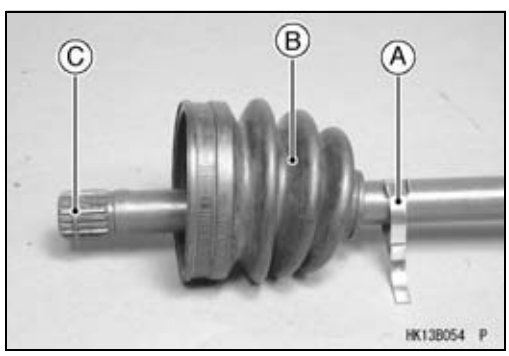

- Apply the special grease slightly on the part [A] of the band installation in order to make easy to install the boot band.
- Tighten the small boot band [B].

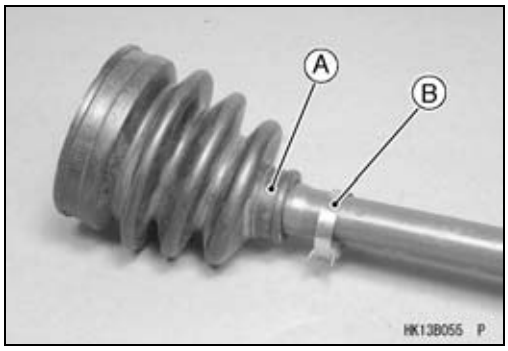

○Tighten the boot band [A] and bend the tangs [B] securely to hold down the end of the band.

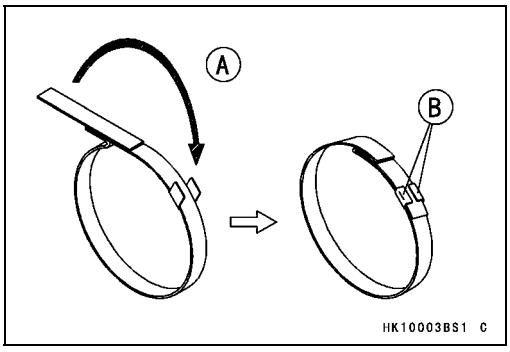

- Place the special grease tube nozzle in the bore of the housing and squeeze the tube [A] until the grease comes out from the joint bearing.

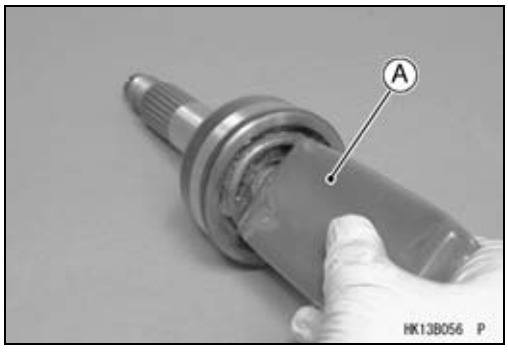

- Tap the shaft end [A] straight with a plastic hammer until it is locked by the circlip.

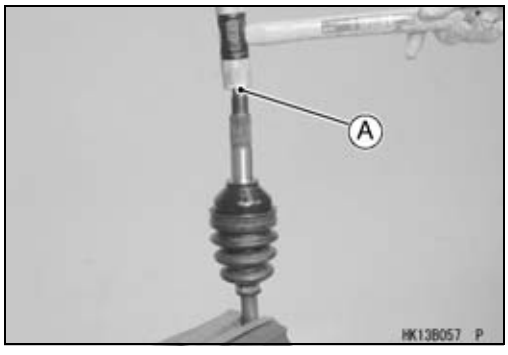

- Squeeze all of the special grease [A] into the new boot [B], and slide the boot onto the outboard joint [C].

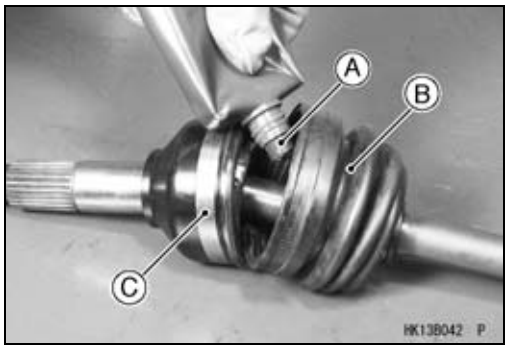

Rear Axle

- Compress the axle assembly to the specified length while relieving the air pressure inside the inboard boot.
- Hold the axle at this setting.

Standard Length of Assembling:
Outboard: 216.2 mm (8.51 in.) [A]

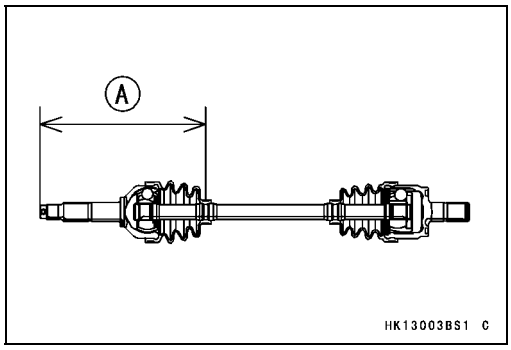

- Open the edge of the boot in order to equalize the air pressures.
- Tighten the large band [A] and bend the tangs securely to hold down the end of the band.

Maximum Outside Diameter of Band: 80.2 mm (3.16 in.)
(After tightening the outside diameter)

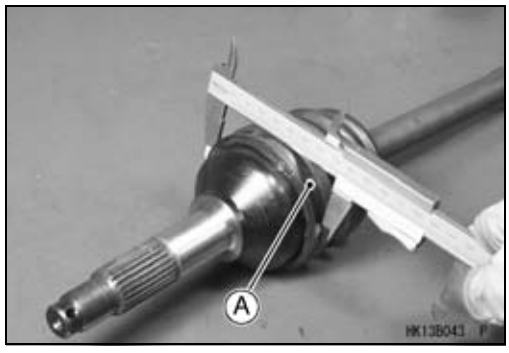

Inboard Joint Boot Removal

- Remove:
  Rear Axle (see Rear Axle Removal)
  Boot Bands [A]
- Scrap the removed boot bands.
- Slide the joint boot toward the outboard joint.

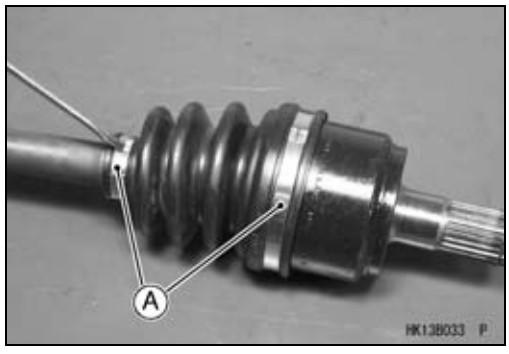

- Remove the retaining ring [A].
- Separate to the axle shaft.

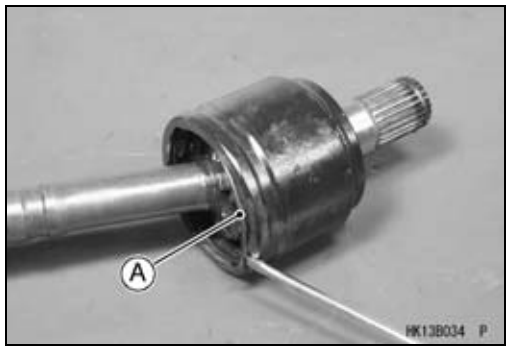

- Remove the steel balls [A].
- Slide the cage [B] toward the outboard joint.

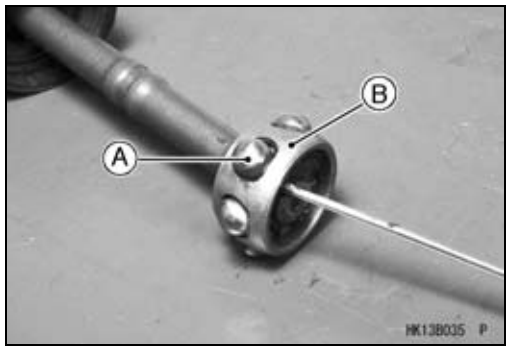

Rear Axle

- Remove:
  Circlip [A]

  Special Tool - Outside Circlip Pliers [B]: 57001-144

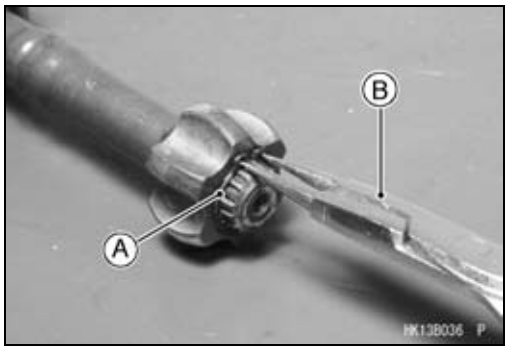

- Remove:
  Inner Race [A]
  Cage [B]
  Inboard Joint Boot [C]
  Boot Band [D]

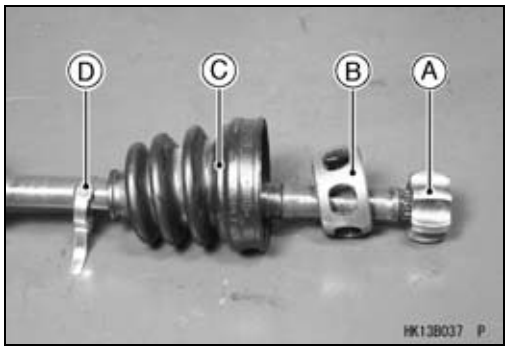

Inboard Joint Boot Installation

- Install:
  New Small Band [A]
  New Inboard Joint Boot [B]
  Cage [C]

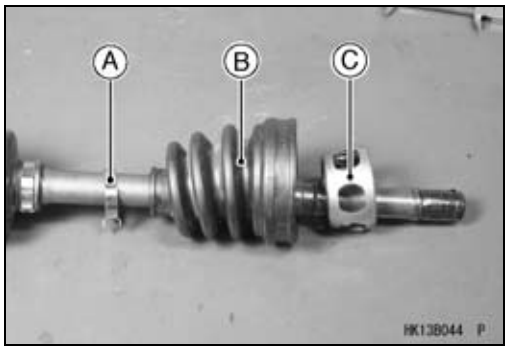

- Install the inner race [A] so that the flat side [B] faces outboard joint.

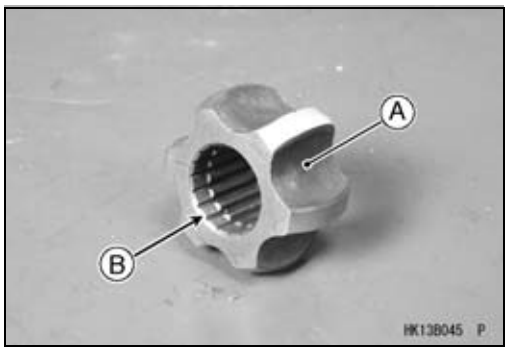

- Install:
  Circlip [A]

  Special Tool - Outside Circlip Pliers: 57001-144
- Slide the cage [B] on the inner race and install the steel balls [C].

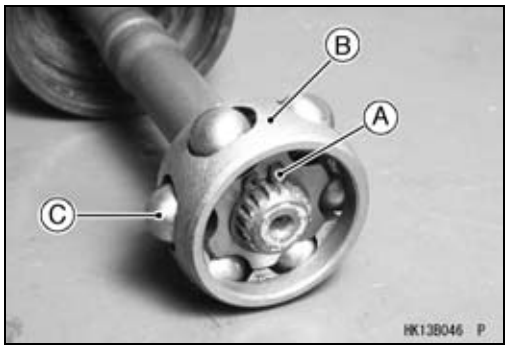

Rear Axle

- Apply the special grease [A] to the steel balls and cage.

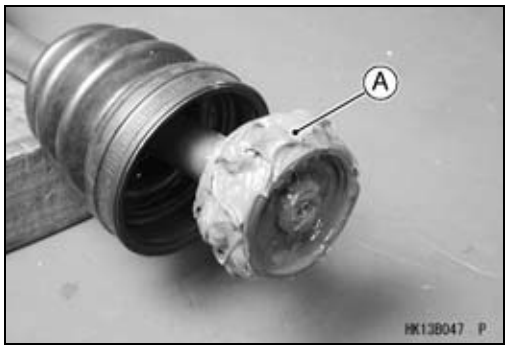

- Squeeze about half a tube (30 grams) of the special grease [A] into the bearing cup [B].

- Insert the balls and cage assembly in the bearing cup strongly.
- Install the new retaining ring [A] so that the opening [B] is aligned with one of the projections [C].

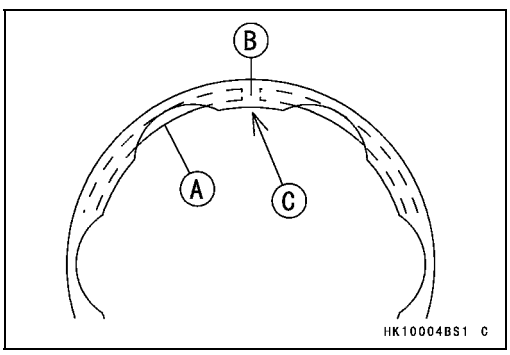

- Tighten the small band.
- Squeeze the remaining special grease [A] into the inboard joint boot [B].

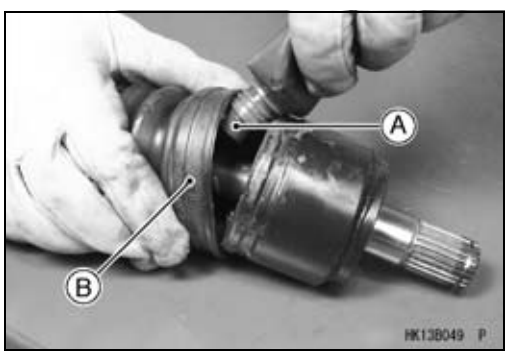

Rear Axle

- Compress the axle assembly to the specified length while relieving the air pressure inside the inboard boot.
- Hold the axle at this setting.

Standard Length of Assembling:
Inboard: 174.6 mm (6.87 in.) [A]

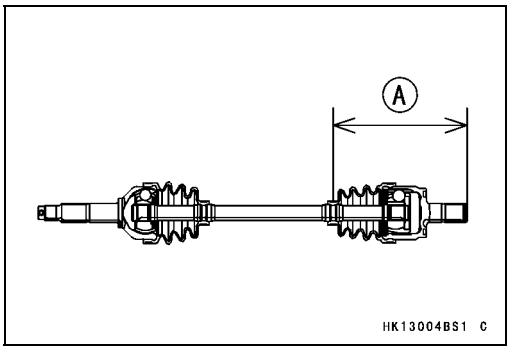

- Open the edge of the boot in order to eqalize the air pressures.
- Tighten the large band [A].

○Assemble it the same as the outboard joint boot, noting this setting;

Maximum Outside Diameter of Band: 79.7 mm (3.14 in.)
(After tightening the outside diameter)

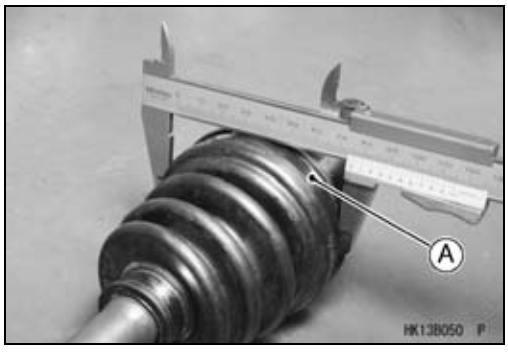

- While the band is held at the diameter above, tap down the tangs [A] of the band.

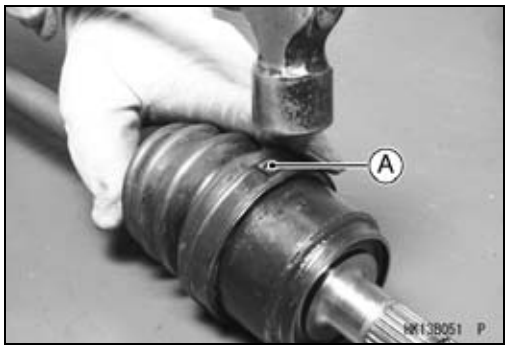

Rear Final Gear Case

Rear Final Gear Case Oil Level Inspection

- Park the vehicle so that it is level, both side-to-side and front-to-rear.
- Remove the filler cap.

CAUTION
Be careful not to allow any dirt or foreign materials to enter the gear case.

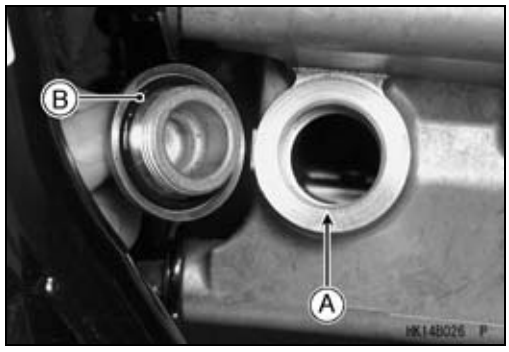

- Check the oil level. The oil level should come to the bottom of the filler opening [A].

★If it is insufficient, first check the rear final gear case for oil leakage, remedy it if necessary, and add oil through the filler opening. Use the same type and brand of oil that is already in the final gear case.

- Apply grease to the O-ring [B].
- Be sure the O-ring is in place.

Torque - Rear Final Gear Case Oil Filler Cap: 29 N·m (3.0 kgf·m, 22 ft·lb)

Rear Final Gear Case Oil Change

- Refer to the Rear Final Gear Case Oil Change in the Periodic Maintenance chapter.

Rear Final Gear Case Removal

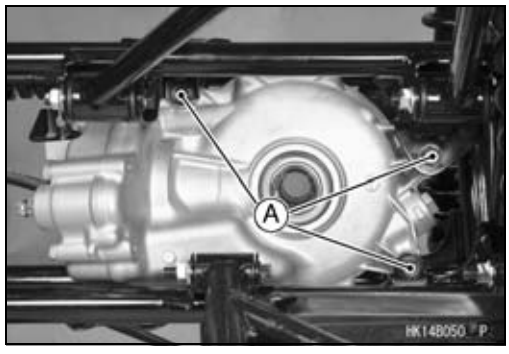

- Remove:
  Rear Fender (see Rear Fender Removal in the Frame chapter)
  Fuel Tank (see Fuel Tank Removal in the Fuel System chapter)
  Rear Wheels (see Wheel Removal in the Wheels/Tires chapter)
  Rear Propeller Shaft (Rear Propeller Shaft Removal)
  Rear Axles (see Rear Axle Removal)
  Brake Cable Rear Ends
  Brake Cam Lever
  Rear Final Gear Case Bolts [A] and Washers (rear)

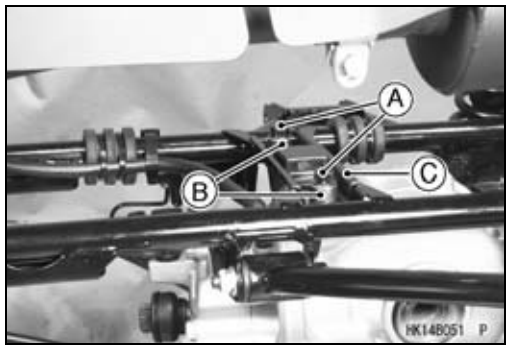

- Remove:
  Bracket Bolts [A]
  Collars [B]
  Bracket [C]

Rear Final Gear Case

- Remove the rear final gear case [A] as shown.

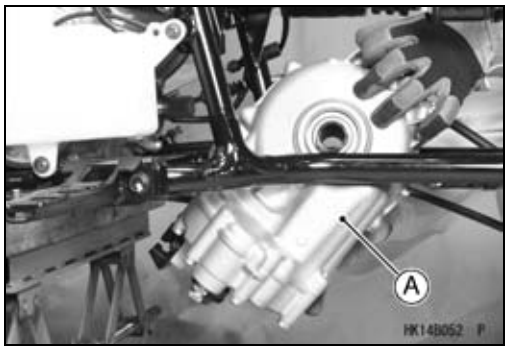

Rear Final Gear Case Installation

- Install:
  Rear Final Gear Case
  Bracket [A]
  Collars [B]
  Bracket Bolts [C]
  [D] Front
  [E] Hole
  Washers (rear side)
- Tighten:

Torque - Rear Final Gear Case Nuts [F]: 91 N·m (9.3 kgf·m, 67 ft·lb)
Rear Final Gear Case Bracket Bolts: 59 N·m (6.0 kgf·m, 43 ft·lb)

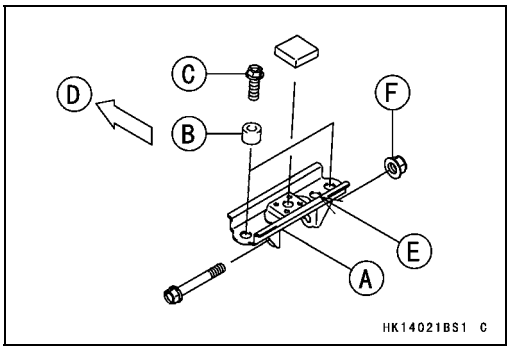

- Install:
  Removed Parts (see applicable chapters)

Rear Final Gear Case Disassembly

- Remove:
  Rear Final Gear Case (see Rear Final Gear Case Removal)
  Rear Final Gear Case Right Cover Bolts (M8) [A]
  Rear Final Gear Case Right Cover Bolts (M10) [B]
  Rear Final Gear Case Right Cover Bolts (M12) [C]

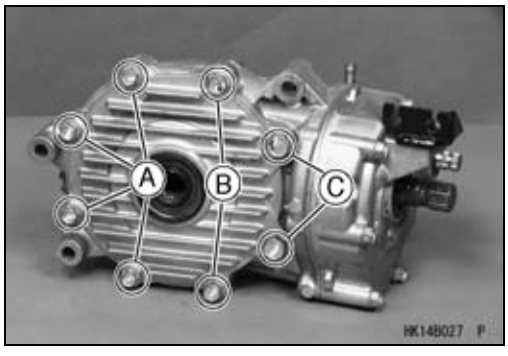

- Using the pry points [A], remove the rear final gear case right cover [B].
  [C] Arrow Marks
- Remove:
  Ring Gear
  Shims

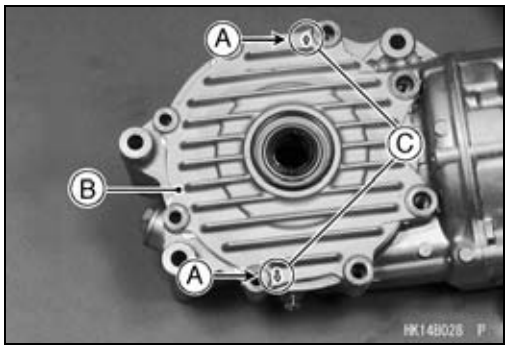

Rear Final Gear Case

- Remove:
  Rear Final Gear Case Front Cover Bolts [A]
  Rear Final Gear Case Front Cover Assembly [B]

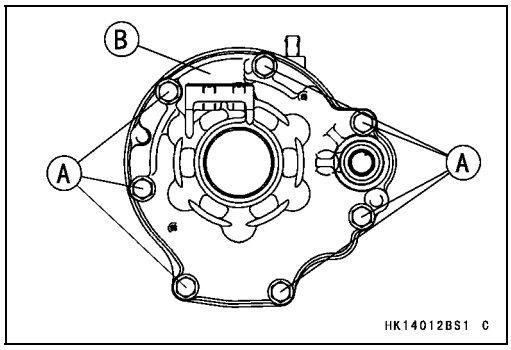

- Remove:
  Gasket Screws [A]
  Gasket [B]

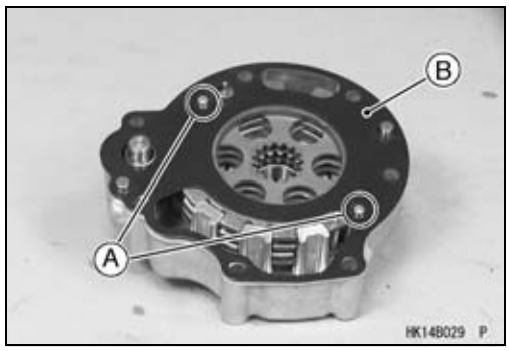

- Remove:
  Set Pins [A] with Steel Plates [B] and Friction plates [C]

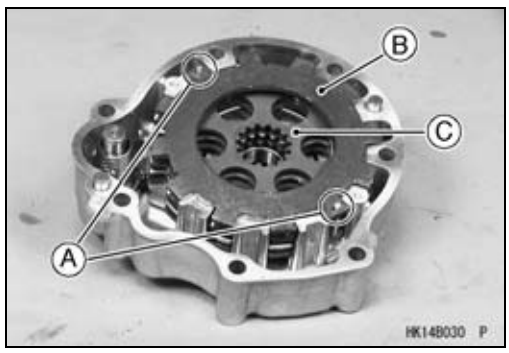

- Remove:
  Brake Cam Plate [A]
  Brake Camshaft [B] and Spring

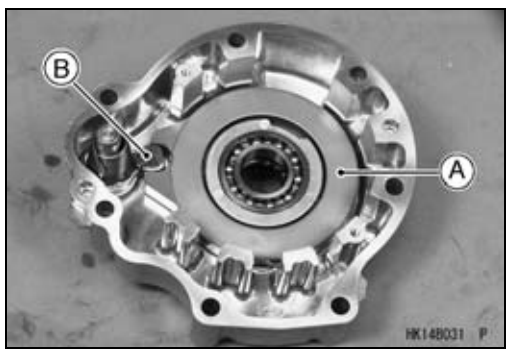

- Remove:
  Steel Balls [A]

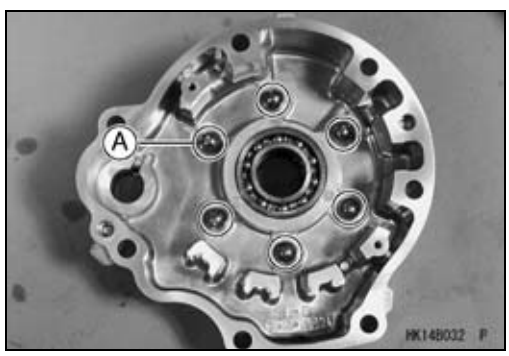

Rear Final Gear Case

- Remove:
  Pinion Gear Bearing Holder [A]

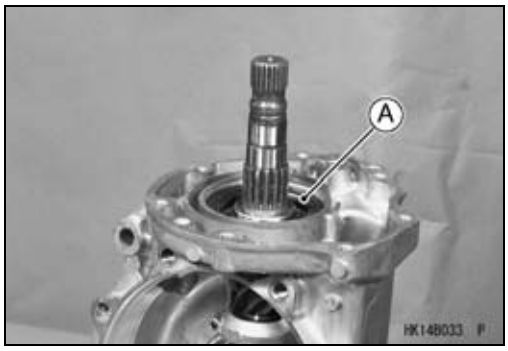

○Hold the rear final gear case [A] in a vise, and remove the bearing holder using the socket wrench [B].

Special Tool - Socket Wrench, Hex 50: 57001-1478

○If it is difficult to break free the holder, apply the heat to it to softer the locking agent.

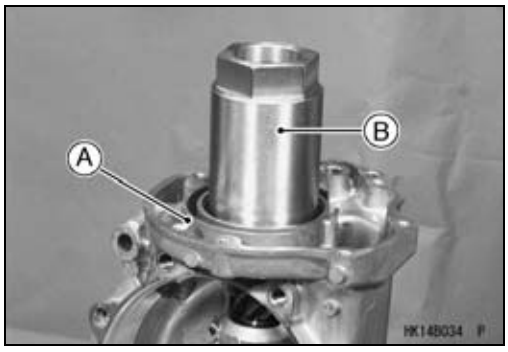

- Remove:
  Pinion Gear Unit [A]
  Shim(s) [B]

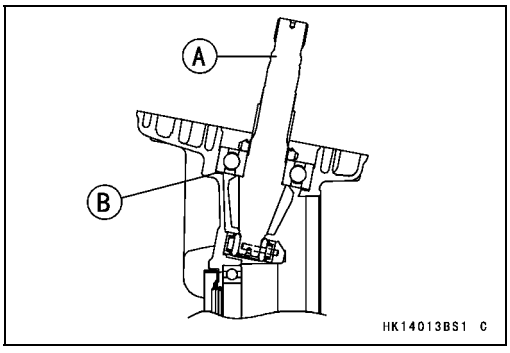

- Drill out the spring pin [A] with a drill bit of the 3 mm (0.12 in.) diameter and remove it.
- Remove the needle bearing [B].

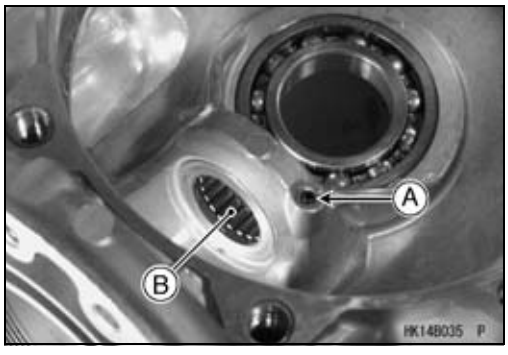

Rear Final Gear Case Right Cover Assembly

[A] Rear Final Gear Case Right Cover

- Press:
  Ball Bearing (until bottomed)

Special Tool - Bearing Driver, ϕ54.3 [B]: 57001-1488

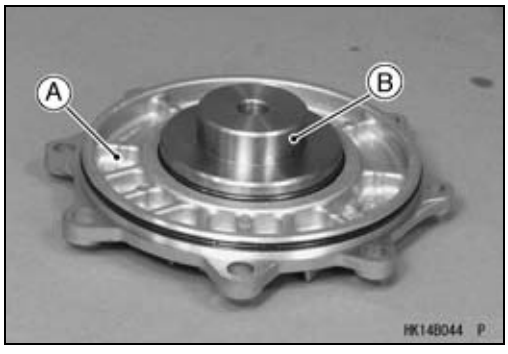

Rear Final Gear Case

[A] Rear Final Gear Case Right Cover
[B] Ball Bearing

- Press:
  Oil Seal [C] (until bottomed)

Special Tool - Bearing Driver Set: 57001-1129

- Apply Grease:
  Oil Seal Lips [D]

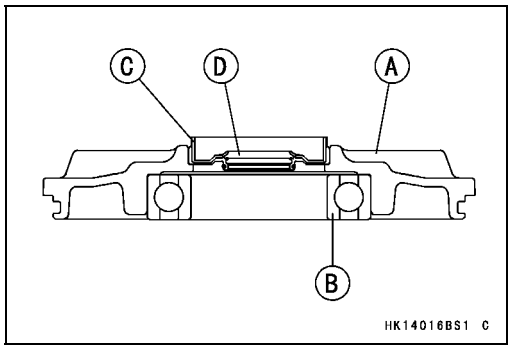

Rear Final Gear Case Front Cover Assembly

[A] Rear Final Gear Case Front Cover

- Press:
  Ball Bearing [B] (until bottomed)

Special Tool - Bearing Driver Set: 57001-1129

- Press the faces of the oil seals [C] are flush with the ends of the housing.
- Apply Grease:
  Oil Seal Lips

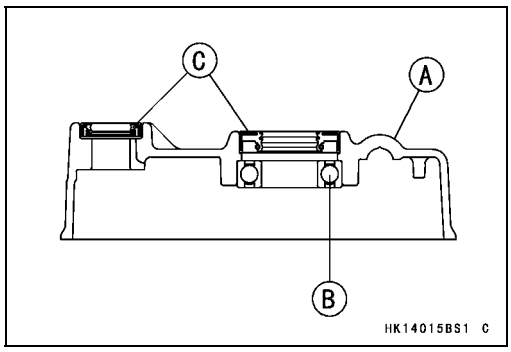

Rear Final Gear Case Assembly

[A] Rear Final Gear Case

- Press:
  Ball Bearing [B] (until bottomed)
  Oil Seal [C] (until bottomed)

Special Tool - Bearing Driver Set: 57001-1129

- Apply Grease:
  Oil Seal Lip
- Press the face of the needle bearing [D] so that its surface is flush with the end of the housing.
- Insert the spring pin [E].

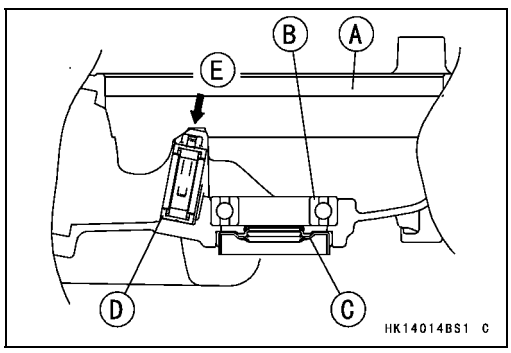

- Visually check the pinion gear [A] and ring gear [B] for scoring, chipping, or other damage.

★Replace the bevel gear as a set if either gear is damaged since they are lapped as a set in the factory to get the best tooth contact.

- Be sure to check and adjust the bevel gear backlash and tooth contact when any of the backlash-related parts are replaced (see Rear Final Bevel Gear Adjustment).

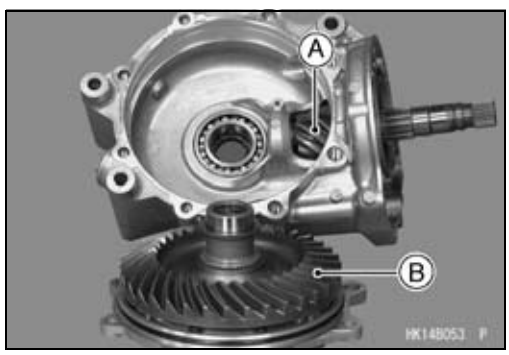

Rear Final Gear Case

- Insert the shim(s) and pinion gear unit [A].
- Apply a non-permanent locking agent to the pinion gear bearing holder, and tighten it.

Special Tool - Socket Wrench, Hex 50: 57001-1478

Torque - Pinion Gear Bearing Holder: 137 N·m (14 kgf·m, 101 ft·lb)

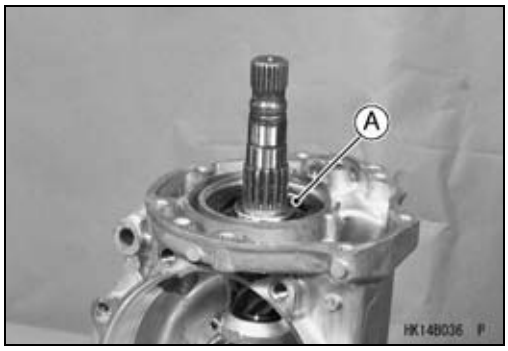

★When installing a new pinion gear bearing holder [A], install the holder so that the no coating area [B] (one pitch thread) faces gear case [C].
[D] Locking Agent Coating Area

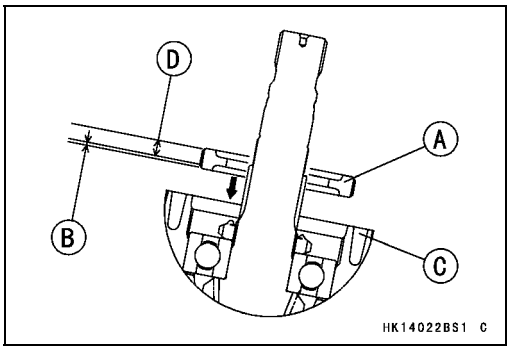

- Install:
  Brake Camshaft [A]
  Spring [B]

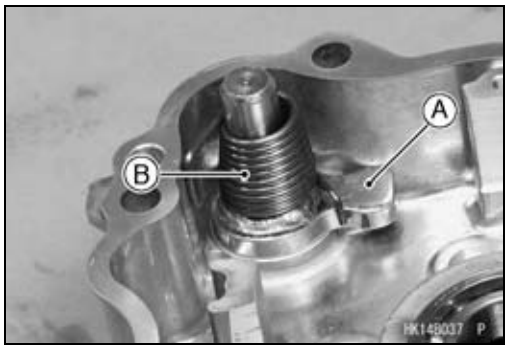

- Install:
  Steel Balls [A]

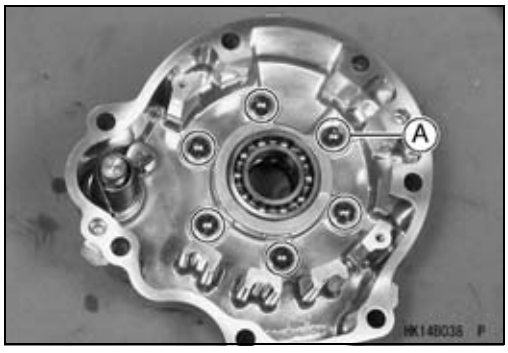

- Install:
  Brake Cam Plate [A]

○Fit the cam plate and brake camshaft [B] as shown.

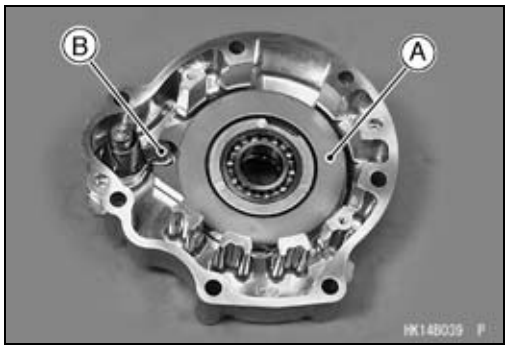

Rear Final Gear Case

- Install:
  Steel Plate [A] (P/No. 41080-1483, two holes)
  Set Pins [B] and Springs [C]

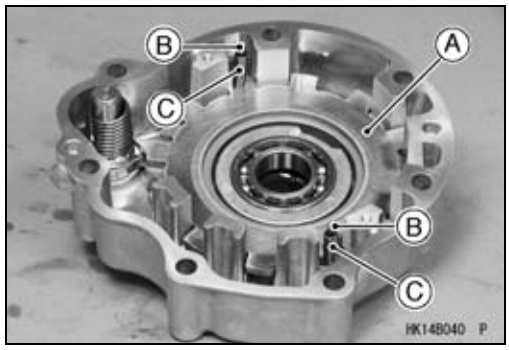

- Install (alternately):
  Friction Plates [A]
  Steel Plates (P/No. 41080-1484, without holes)

- Install:
  Steel Plate [A] (P/No. 41080-1483, two holes)

○Insert the pins [B] into the holes of steel plate.

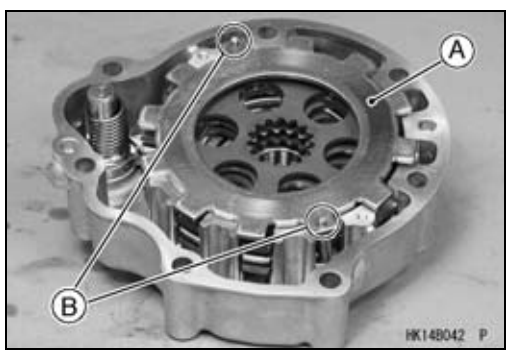

- Install:
  Dowel Pins [A]
  New Gasket [B]
- Apply a non-permanent locking agent to the rear final gear case gasket screws.
- Tighten:

Torque - Rear Final Gear Case Gasket Screws [C]: 1.3 N·m (0.13 kgf·m, 12 in·lb)

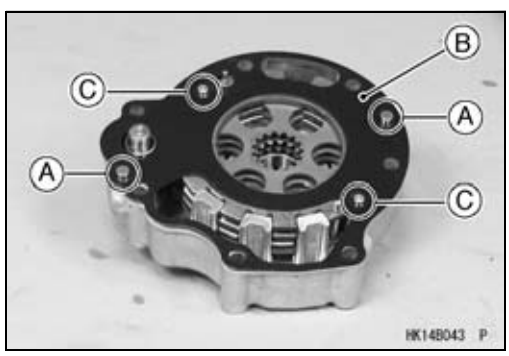

- Install:
  Rear Final Gear Case Front Cover [A]
- Tighten:

Torque - Rear Final Gear Case Front Cover Bolts [B]: 24 N·m (2.4 kgf·m, 17 ft·lb)

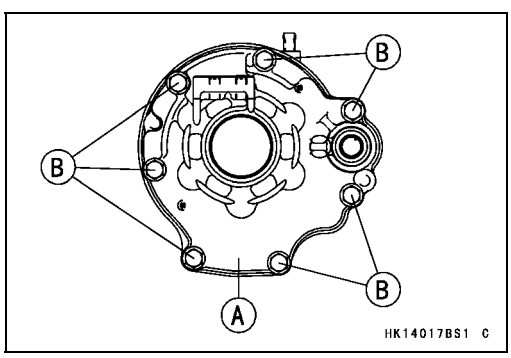

Rear Final Gear Case

- Inspect:
  Ball Bearing [A] (see Bearing and Oil Seal section)
  Oil Seal [B] (see Bearing and Oil Seal section)

★If they are damaged, replace them.

- Apply grease to the oil seal lips and O-ring [C].
- Install:
  Shim [D]
  Ring Gear [E]

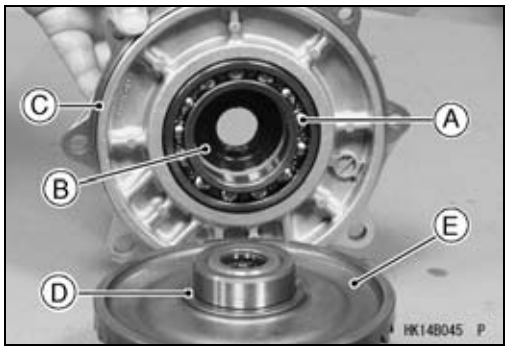

- Install:
  Shim [A]
  Rear Final Gear Case Right Cover [B]

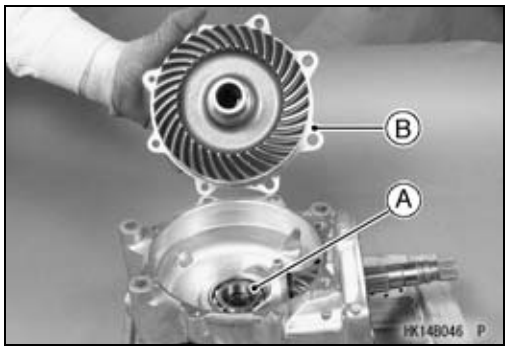

- Apply a non-permanent locking agent to the rear final gear case right cover bolts.
- Tighten:

Torque - Rear Final Gear Case Right Cover Bolts (M12) [A]: 93 N·m (9.5 kgf·m, 69 ft·lb)
Rear Final Gear Case Right Cover Bolts (M10) [B]: 49 N·m (5.0 kgf·m, 36 ft·lb)
Rear Final Gear Case Right Cover Bolts (M8) [C]: 24 N·m (2.4 kgf·m, 17 ft·lb)
Rear Final Gear Case Oil Drain Plug [D]: 15 N·m (1.5 kgf·m, 11 ft·lb)

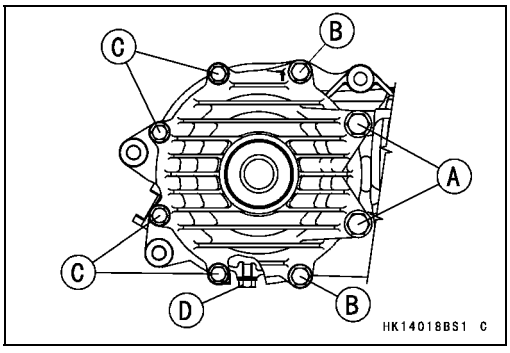

Rear Final Bevel Gear Adjustment

○The **backlash** and **tooth contact pattern** of the bevel gears must be correct to prevent the gears from making noise and being damaged.

- After replacing any of the backlash-related parts, be sure to check and adjust the backlash and tooth contact of the bevel gears. First, adjust backlash, and then tooth contact by replacing shims.

○The amount of backlash is influenced by the ring gear position more than by the pinion gear position.

○Tooth contact locations is influenced by the pinion gear position more than by the ring gear position.

Rear Final Gear Case

Rear Final Gear Case (Backlash-related Parts)

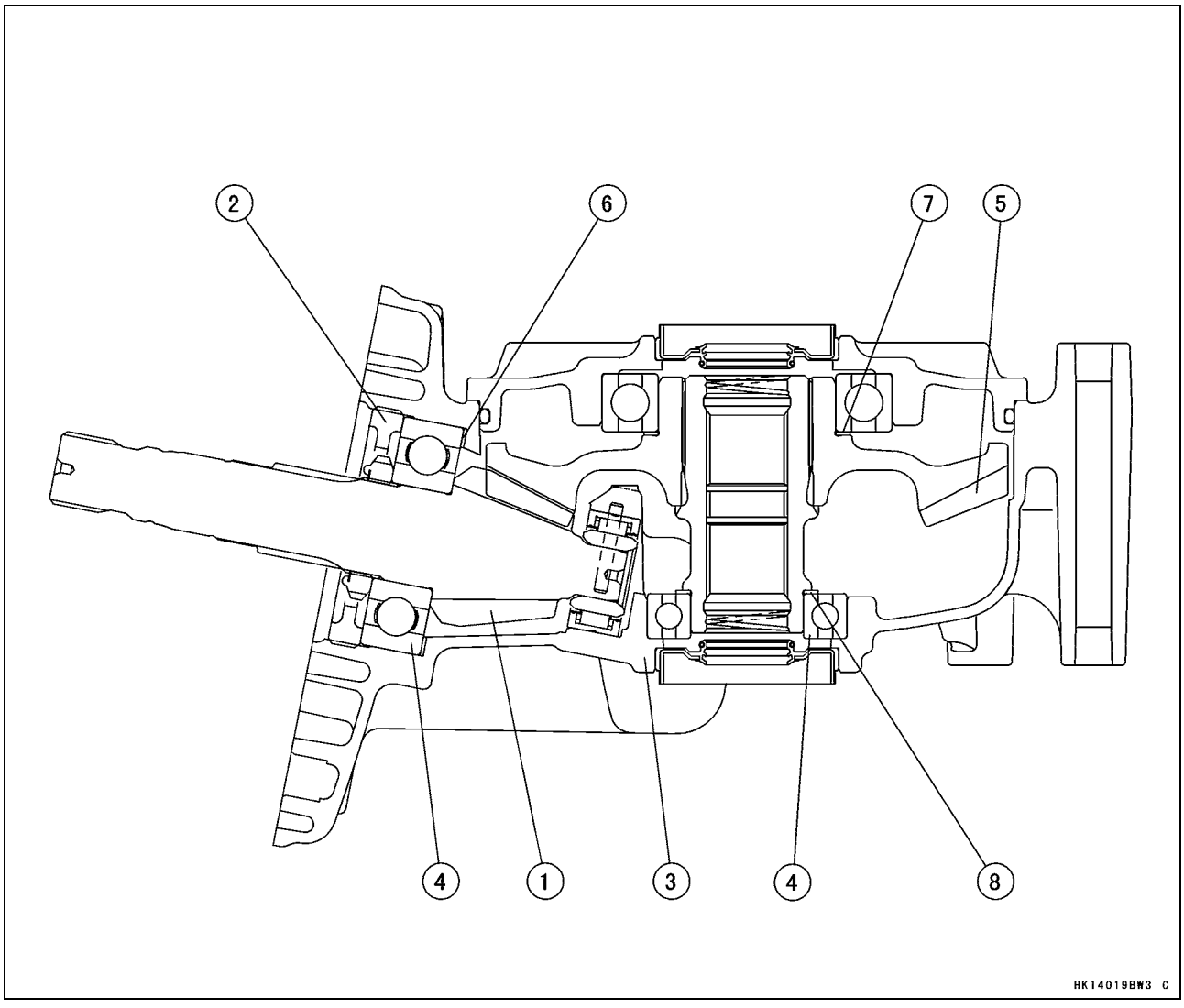

1. Pinion Gear
2. Pinion Gear Bearing Holder
3. Gear Case Right Cover
4. Ball Bearings
5. Ring Gear
6. Pinion Gear Shim(s)
7. Ring Gear Shim(s)
8. Ring Gear Shim(s)

6. Pinion Gear Shims for Backlash Adjustment

Thickness	Part Number
0.15 mm (0.006 in.)	92180-1423
0.2 mm (0.008 in.)	92180-1424
0.5 mm (0.020 in.)	92180-1425
0.8 mm (0.031 in.)	92180-1426
1.0 mm (0.039 in.)	92180-1427
1.2 mm (0.047 in.)	92180-1428

7. Ring Gear Shims for Tooth Contact Adjustment

Thickness	Part Number
0.15 mm (0.006 in.)	92180-1417
0.2 mm (0.008 in.)	92180-1418
0.5 mm (0.020 in.)	92180-1419
0.8 mm (0.031 in.)	92180-1420
1.0 mm (0.039 in.)	92180-1421
1.2 mm (0.047 in.)	92180-1422

8. Ring Gear Shims for Tooth Contact Adjustment

Thickness	Part Number
0.15 mm (0.006 in.)	92180-0166
0.2 mm (0.008 in.)	92180-0165
0.5 mm (0.020 in.)	92180-0164
0.8 mm (0.031 in.)	92180-0163
1.0 mm (0.039 in.)	92180-0162
1.2 mm (0.047 in.)	92180-0161

Backlash Adjustment

- Clean any dirt and oil off the bevel gear teeth.
- Install the pinion gear assembly with the primary shim **1.0 mm (0.039 in.) thickness.**
- Assemble the rear final gear case (see Rear Final Gear Case Assembly).

○Install the ring gear with the primary shims **1.0 mm (0.039 in.) thickness.**

○Check the backlash during tightening the cover bolts, and stop tightening them immediately if the backlash disappears. Then, change the ring gear shim to a thinner one.

- Temporarily, install the rear axle in the gear case and hold it with a vise so that the ring gear is lower than the pinion gear.
- Mount a dial gauge [A] so that the tip of the gauge is against the splined portion [B] of the pinion gear joint.
- To measure the backlash, move the pinion gear shaft back and forth [C] while holding the rear axle steady. The difference between the highest and the lowest gauge reading is the amount of backlash.

○Measure backlash at three locations equally spaced on the splines.

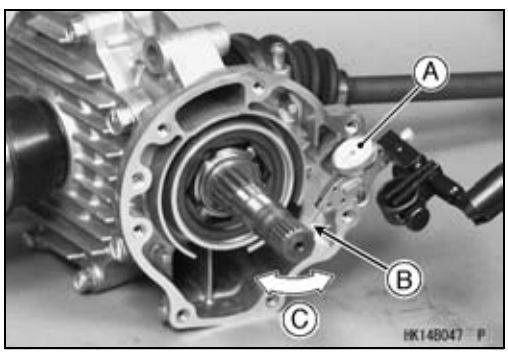

Rear Final Bevel Gear Backlash

Standard: **0.04 ~ 0.17 mm (0.002 ~ 0.007 in.) at pinion gear spline**

Rear Final Gear Case

★If the backlash is not within the standard, replace the pinion gear shim(s). To increase backlash, increase the thickness of the shim(s). To decrease backlash, decrease the thickness of the shim(s).
★Change the thickness a little at a time.
● Recheck the backlash, and readjust as necessary.

Tooth Contact Adjustment
● Clean any dirt and oil off the bevel gear teeth.
● Apply checking compound to 4 or 5 teeth of the pinion gear.

NOTE

○*Apply checking compound to the teeth in a thin, even coat with a fairly stiff paint brush. If painted too thickly, the exact tooth pattern may not appear.*
○*The checking compound must be smooth and firm, with the consistency of tooth paste.*
○*Special compounds are available at automotive supply stores for the purpose of checking gear tooth patterns and contact. Use one of these for checking the bevel gears.*

● Assemble the rear final gear case (see Rear Final Gear Case Assembly).
● Turn the pinion gear for one revolution in the drive and reverse (coast) direction, while creating drag on the ring gear.
● Remove the ring gear and pinion gear unit to check the drive pattern and coast pattern of the bevel gear teeth.
○The tooth contact patterns of both (drive and coast) sides should be centrally located between the top and bottom of the tooth. The drive pattern can be a little closer to the toe and the coast pattern can be a somewhat longer and closer to the toe.

★If the tooth contact pattern is incorrect, replace the pinion gear shim(s), following the examples shown (see Correct Tooth Contact Pattern in the Front Final Bevel Gear Adjustment section).
● Then erase the tooth contact patterns, and check them again. Also check the backlash every time the shim(s) are replaced. Repeat the shim change procedure as necessary.

NOTE

○*If the backlash is out of the standard range after changing the pinion gear shim(s), change the ring gear shim(s) to correct the backlash before checking the tooth contact pattern.*

Rear Final Gear Case

Pinion Gear Unit Disassembly

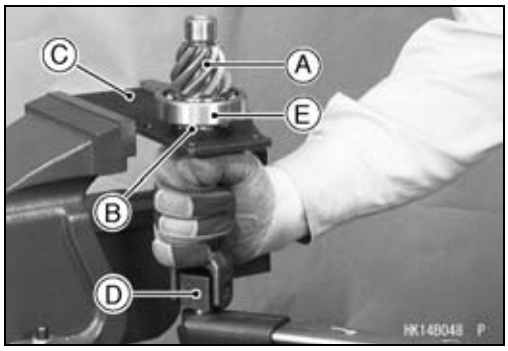

- Remove:
  Pinion Gear Unit [A] (see Rear Final Gear Case Disassembly)
- Hold the pinion gear bearing holder nut [B] with the socket wrench [C] in a vise, and loosen the pinion gear shaft using the pinion gear holder [D].

  Special Tools - Socket Wrench: 57001-1363
  Pinion Gear Holder, m1.0: 57001-1281
- Remove the ball bearing [E] as necessary.

  Special Tool - Bearing Puller: 57001-135

Pinion Gear Unit Assembly

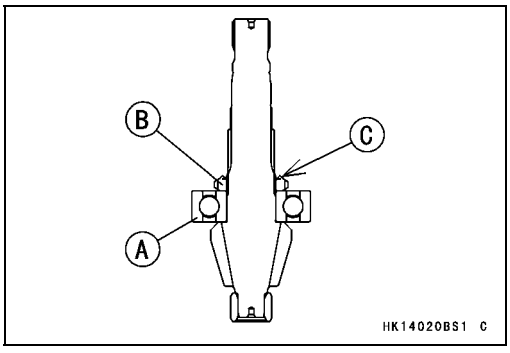

○The pinion gear and ring gear are lapped as a set in the factory to get the best tooth contact. They must be replaced as a set.
- Visually inspect the bearing for abrasion, color change, or other damage.

★If there is any doubt as to the condition of a bearing, replace the bearing.
- Be sure to check and adjust the bevel gear backlash and tooth contact, when any of the backlash-related parts are replaced (see Front Final Bevel Gear Adjustment).
- Press the bearing [A] on the pinion gear until it is bottomed.
- Install the pinion gear bearing holder nut [B] so that the projection [C] faces outward.

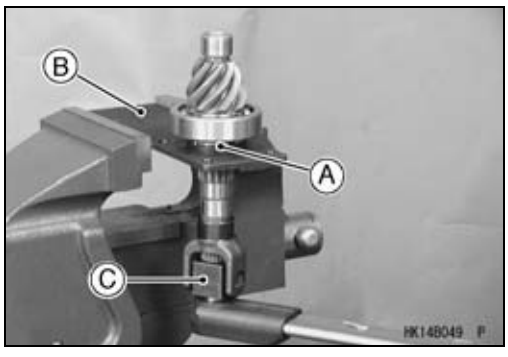

- Apply a non-permanent locking agent to the pinion gear bearing holder nut [A], and tighten it.

  Special Tools - Socket Wrench [B]: 57001-1363
  Pinion Gear Holder, m1.0 [C]: 57001-1281

  Torque - Pinion Gear Bearing Holder Nut: 157 N·m (16 kgf·m, 116 ft·lb)

Bearing and Oil Seal

Ball or Needle Bearing Inspection

Since the bearings are made to extremely close tolerances, the clearance cannot normally be measured.

CAUTION
Do not remove any bearings for inspection except the right rear axle bearing.

- Turn each bearing in the case or hub back and forth [A] while checking for plays, roughness, or binding.

★If bearing play, roughness, or binding is found, replace the bearing.

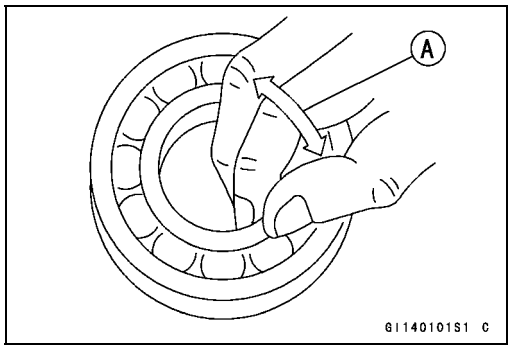

- Check the needle bearings [A].

○The rollers in the needle bearing normally wear very little, and wear is difficult to measure. Instead of measuring, inspect the bearing for abrasion, color change, or other damage.

★If the bearing is damaged, replace the bearing.

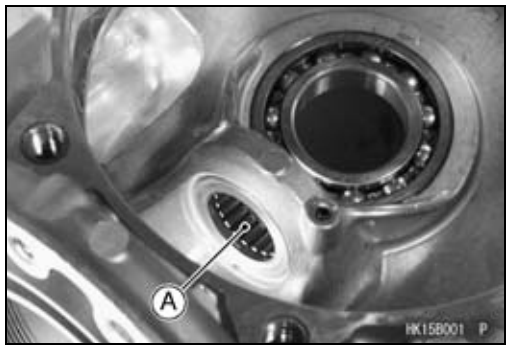

Bearing and Oil Seal

Oil Seal Inspection

- Inspect the oil seals [A].

★Replace any if the lips are misshapen, discolored (indicating that the rubber has deteriorated), hardened, or been otherwise damaged.

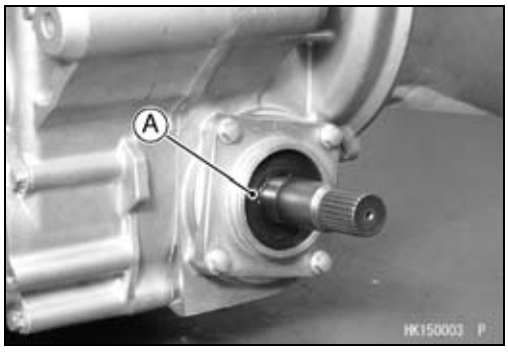

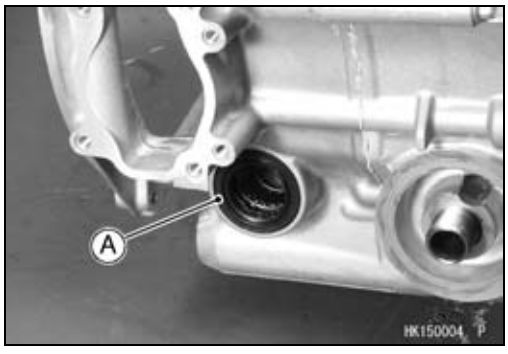

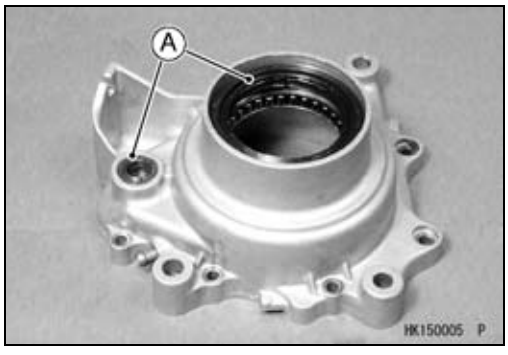

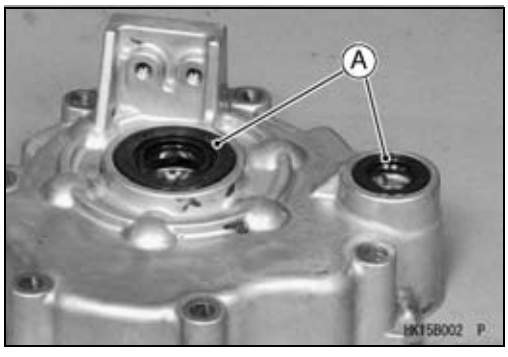

Brakes

Table of Contents

Exploded View

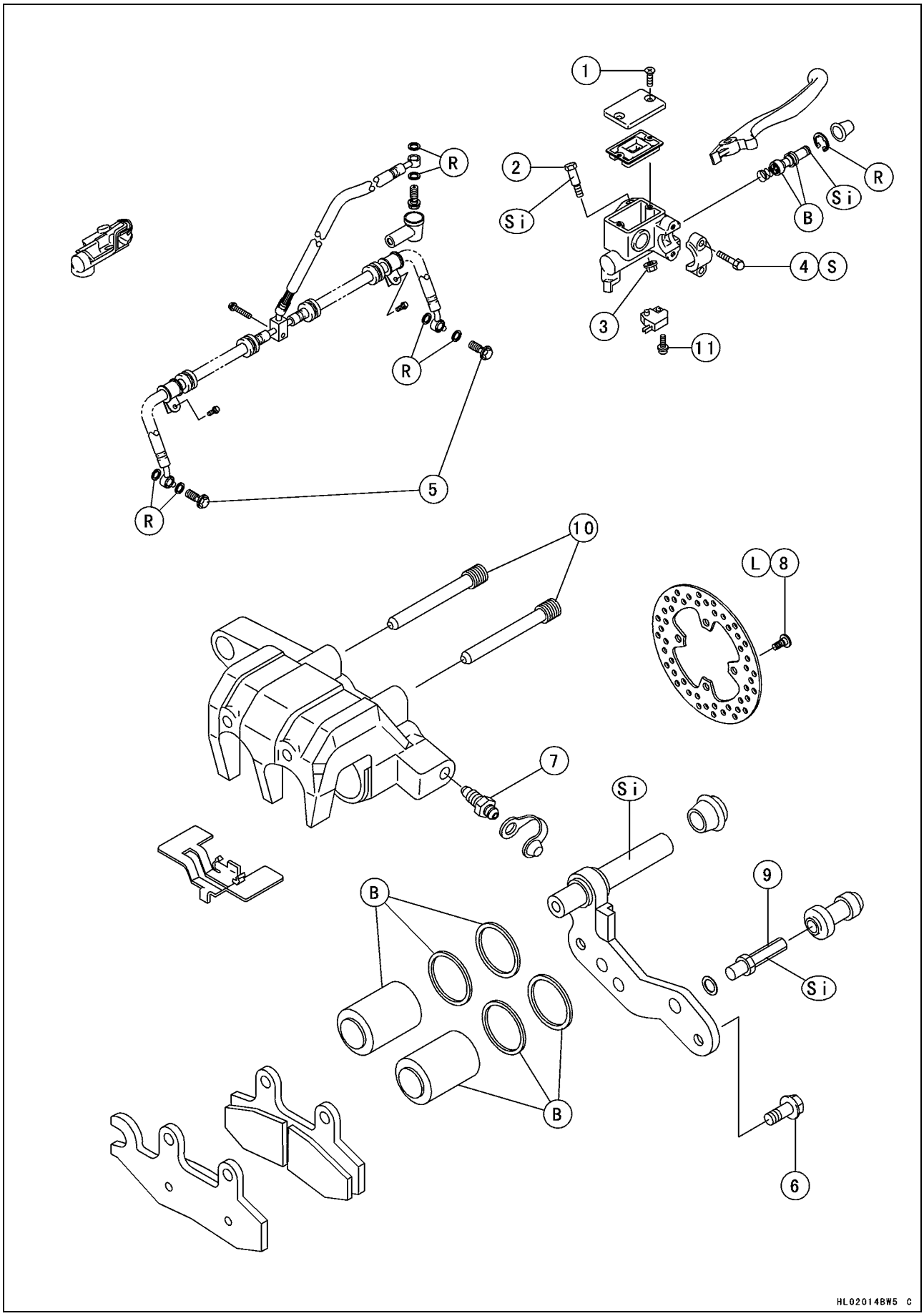

Exploded View

No.	Fastener	Torque			Remarks
		N·m	kgf·m	ft·lb	
1	Reservoir Cap Screws	1.5	0.15	13 in·lb	
2	Front Brake Lever Pivot Bolt	6.0	0.61	53 in·lb	
3	Front Brake Lever Pivot Bolt Locknut	6.0	0.61	53 in·lb	
4	Front Brake Master Cylinder Clamp Bolts	9.0	0.92	80 in·lb	S
5	Front Brake Hose Banjo Bolts	25	2.5	18	
6	Front Brake Caliper Mounting Bolts	25	2.5	18	
7	Bleed Valves	7.8	0.80	69 in·lb	
8	Front Brake Disc Mounting Bolts	37	3.8	27	L
9	Front Brake Caliper Holder Shaft	17	1.7	13	
10	Front Brake Pad Mounting Bolts	17	1.7	13	
11	Front Brake Light Switch Mounting Screw	1.2	0.12	10 in·lb	

B: Apply brake fluid.
L: Apply a non-permanent locking agent.
R: Replacement Parts
S: Follow the specific tightening sequence.
Si: Apply silicone grease.

Exploded View

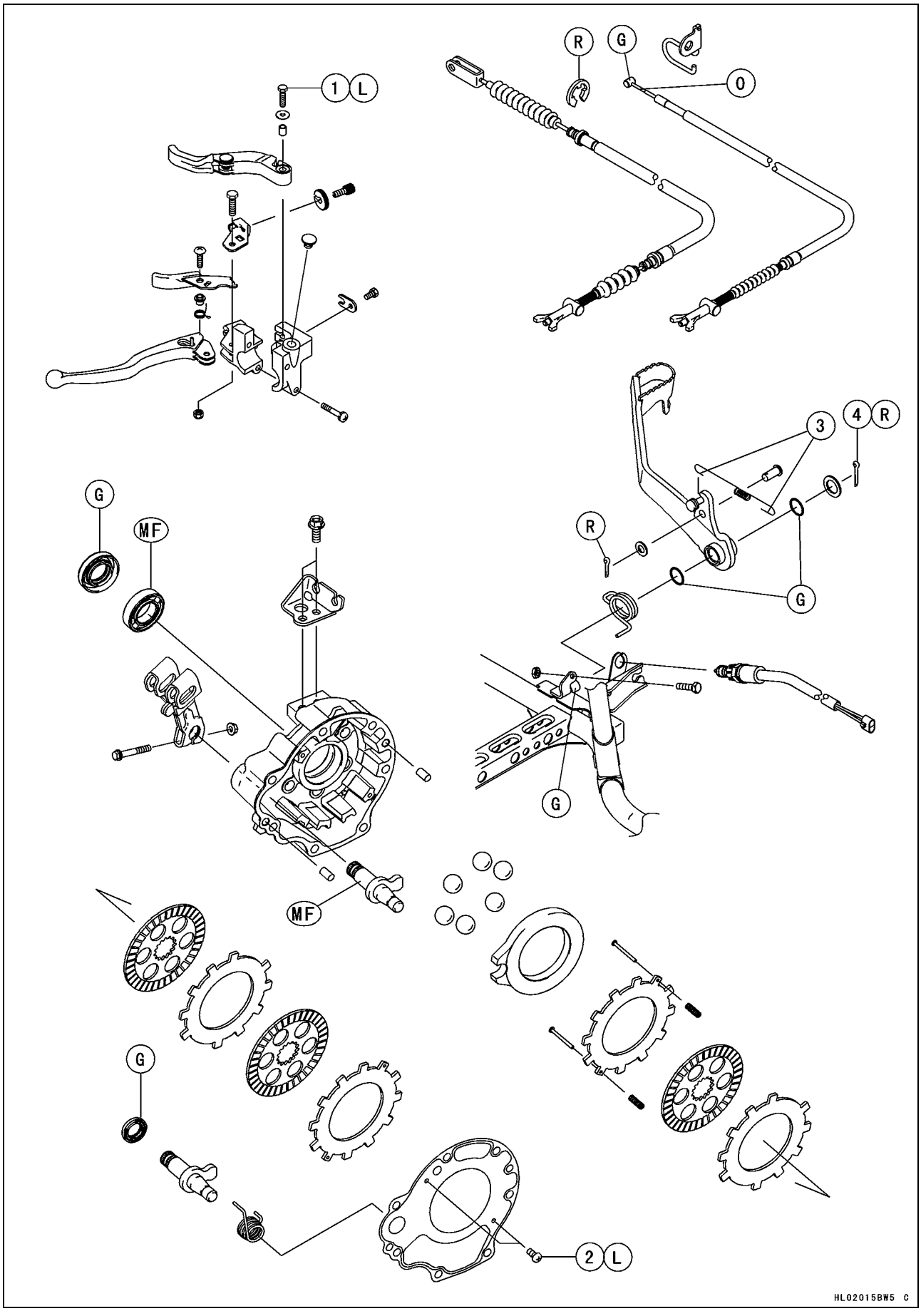

Exploded View

No.	Fastener	Torque			Remarks
		N·m	kgf·m	ft·lb	
1	Variable Differential Control Lever Bolt	–	–	–	L
2	Rear Final Gear Case Gasket Screws	1.3	0.13	12 in·lb	L

3. Bend both hooks after installing the spring.
4. Brake Pedal Cotter Pin

G: Apply grease.
L: Apply a non-permanent locking agent.
MF: Apply gear oil (MOBILE FLUID 424) or equivalent oil.
O: Apply engine oil.
R: Replacement Parts

Specifications

Item	Standard	Service Limit
Brake Fluid		
Type	DOT 3 or DOT 4	– – –
Front Brake		
Pad lining thickness	4.0 mm (0.16 in.)	1 mm (0.04 in.)
Disc thickness	3.3 ~ 3.7 mm (0.130 ~ 0.146 in.)	3 mm (0.12 in.)
Disc runout	TIR 0.4 mm (0.016 in.) or less	TIR 0.5 mm (0.020 in.)
Rear Brake Lever, Pedal and Cables		
Rear brake pedal position	see text	– – –
Rear brake lever free play	1 ~ 2 mm (0.04 ~ 0.08 in.)	– – –
Rear brake pedal free play	15 ~ 25 mm (0.6 ~ 1.0 in.)	– – –

Special Tool

Inside Circlip Pliers:
57001-143

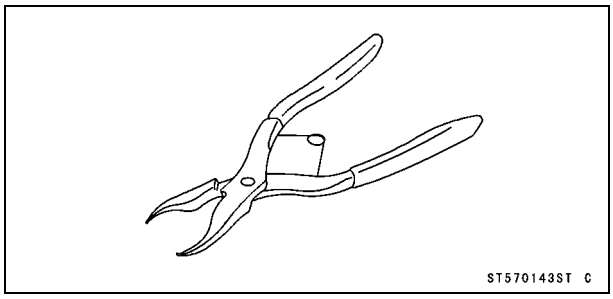

Brake Fluid

⚠ WARNING

When working with the disc brake, observe the precautions listed below.

1. Never reuse old brake fluid.
2. Do not use fluid from a container that has been left unsealed or that has been open for a long time.
3. Do not mix two types and brands of fluid for use in the brake. This lowers the brake fluid boiling point and could cause the brake to be ineffective. It may also cause the rubber brake parts to deteriorate.
4. Don't leave the reservoir cap off for any length of time to avoid moisture contamination of the fluid.
5. Don't change the fluid in the rain or when a strong wind is blowing.
6. Except for the disc pads and disc, use only disc brake fluid, isopropyl alcohol, or ethyl alcohol for cleaning brake parts. Do not use any other fluid for cleaning these parts. Gasoline, engine oil, or any other petroleum distillate will cause deterioration of the rubber parts. Oil spilled on any part will be difficult to wash off completely and will eventually deteriorate the rubber used in the disc brake.
7. When handling the disc pads or disc, be careful that no disc brake fluid or any oil gets on them. Clean off any fluid or oil that inadvertently gets on the pads or disc with a high-flash point solvent. Do not use one which will leave an oily residue. Replace the pads with new ones if they cannot be cleaned satisfactorily.
8. Brake fluid quickly ruins painted surfaces; any spilled fluid should be completely washed away immediately.
9. If any of the brake line fittings or the bleed valve is opened at any time, the **AIR MUST BE BLED FROM THE BRAKE LINE.**

Front Brake Fluid Recommendation

Use extra heavy-duty brake fluid only from a container marked DOT3 or DOT4.

Recommended Disc Brake Fluid

Type	**DOT 3 or DOT 4**

Front Brake Fluid Level Inspection

- Refer to the Brake Fluid Level Inspection in the Periodic Maintenance chapter.

Front Brake Fluid Change

- Refer to the Brake Fluid Change in the Periodic Maintenance chapter.

Brake Fluid

Front Brake Line Air Bleeding

- Bleed the air whenever brake parts are replaced or reassembled.
- Remove the reservoir cap and fill the reservoir with new brake fluid.
- Slowly pump the brake lever several times until no air bubbles can be seen rising up through the fluid from the hose at the bottom of the reservoir. This bleeds the air from the master cylinder and the brake line.

NOTE

○*Tap the brake hose lightly going from the caliper to the reservoir side and bleed the air off at the reservoir.*

- Attach a clear plastic hose to the bleed valve on the caliper, and run the other end of the hose into a container.
- Bleed the brake line and the caliper as follows:

○Hold the brake lever applied [A].
○Quickly open and close the valve [B].
○Release the brake lever [C].

- The fluid level must be checked several times during the bleeding operation and replenished as necessary.

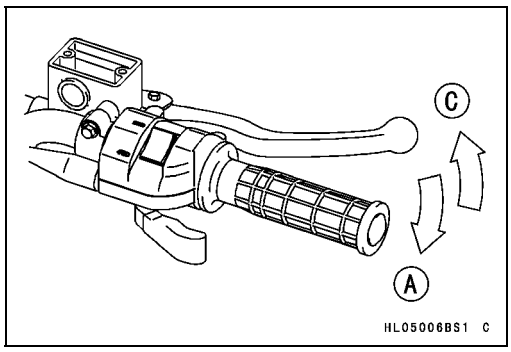

NOTE

○*If the fluid in the reservoir runs completely out any time during bleeding, the bleeding operation must be done over again from the beginning since air will have entered the line.*

○*If the brake lever action still feels soft or "spongy", tap the brake hose from bottom to top and air will rise up to the top part of the hose. Slowly pump the brake lever in the same manner as above.*

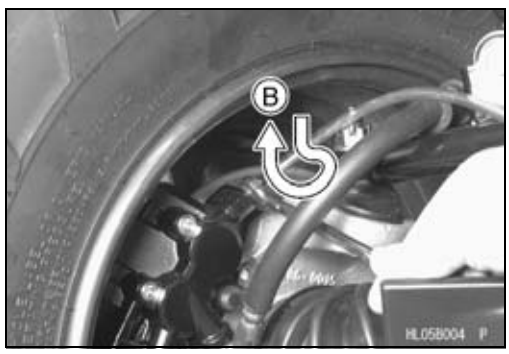

- Tighten:

Torque - Bleed Valves: 7.8 N·m (0.80 kgf·m, 69 in·lb)
Reservoir Cap Screws: 1.5 N·m (0.15 kgf·m, 13 in·lb)

- Apply the brake lever forcefully for a few seconds, and check for fluid leakage around the fittings.

Master Cylinder

Front Brake Master Cylinder Removal

- Remove:
  Brake Hose Banjo Bolt [A]
  Master Cylinder Clamp Bolts [B]
  Master Cylinder [C]

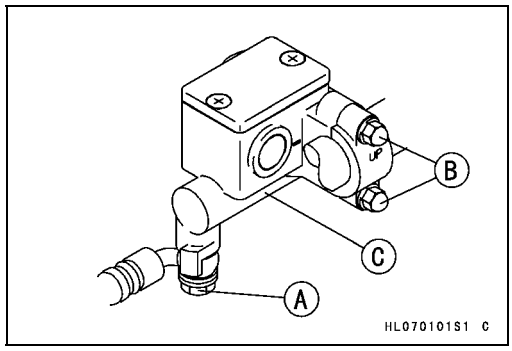

CAUTION

Brake fluid quickly ruins painted surface; any spilled fluid should be completely washed away immediately.

Front Brake Master Cylinder Installation

- Align the punch mark [A] on the handlebar with the mating surface end of the master cylinder clamp.

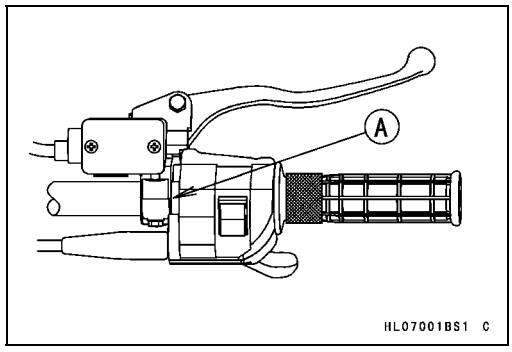

- The master cylinder clamp must be installed with the “UP” mark [A] upwards.
- Tighten the upper clamp bolt first, and then the lower clamp bolt. There will be a gap at the lower part of the clamp after tightening.

  Torque - Front Brake Master Cylinder Clamp Bolts: 9.0 N·m (0.92 kgf·m, 80 in·lb)

- Use a new flat washer on each side of the brake hose fitting, and tighten the banjo bolt.

  Torque - Front Brake Hose Banjo Bolt: 25 N·m (2.5 kgf·m, 18 ft·lb)

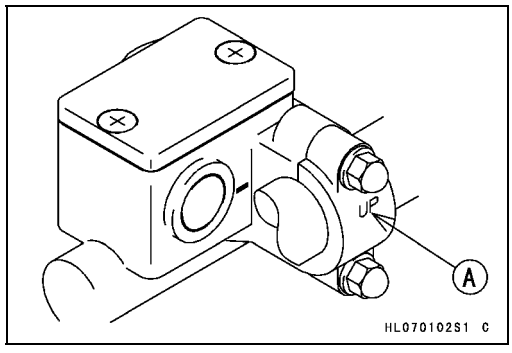

- Bleed the brake line after master cylinder installation (see Front Brake Line Air Bleeding).
- Check the brake for good braking power, no braking brag, and no fluid leakage.

⚠ WARNING

Do not attempt to drive the vehicle until a firm brake lever can be obtained by pumping the brake lever until the pads are against each disc. The brakes will not function on the first application of the lever if this is not done.

Master Cylinder

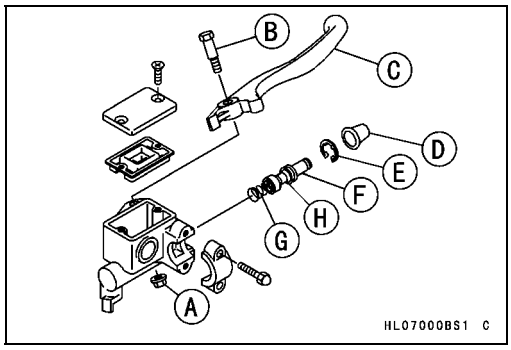

Front Brake Master Cylinder Disassembly

- Remove:
  Front Brake Master Cylinder (see Front Brake Master Cylinder Removal)
  Brake Lever Pivot Bolt Locknut [A]
  Brake Lever Pivot Bolt [B]
  Brake Lever [C]
  Dust Cover [D]
  Circlip [E]
  Piston [F]
  Spring [G]

Special Tool - Inside Circlip Pliers: 57001-143

CAUTION
Do not remove the secondary cup [H] from the piston since removal will damage it.

Front Brake Master Cylinder Assembly

- Before assembly, clean all parts including the master cylinder with brake fluid or alcohol.

CAUTION
Except for the disc pads and disc, use only disc brake fluid, isopropyl alcohol, or ethyl alcohol for cleaning brake parts. Do not use any other fluid for cleaning these parts. Gasoline, engine oil, or any other petroleum distillate will cause deterioration of the rubber parts. Oil spilled on any part will be difficult to wash off completely, and will eventually deteriorate the rubber used in the disc brake.

- Take care not to scratch the piston or the inner wall of the cylinder.
- Apply brake fluid to the removed parts and to the inner wall of the cylinder.
- Tighten:

Torque - Brake Lever Pivot Bolt: 6.0 N·m (0.61 kgf·m, 53 in·lb)
Brake Lever Pivot Bolt Locknut: 6.0 N·m (0.61 kgf·m, 53 in·lb)

Master Cylinder

Front Master Cylinder Inspection (Visual Inspection)

- Disassemble the master cylinder (see Front Brake Master Cylinder Disassembly).
- Check that there are no scratches, rust or pitting on the inner wall of the master cylinder [A] and on the outside of the piston [B].

★If the master cylinder or piston shows any damage, replace them.

- Inspect the primary [C] and secondary [D] cups.

★If a cup is worn, damaged, softened (rotted), or swollen, the piston assembly should be replaced to renew the cups.

★If fluid leakage is noted at the brake lever, the piston assembly should be replaced to renew the cups.

- Check the dust cover [E] for damage.

★If it is damaged, replace it.

- Check that the relief [F] and supply [G] ports are not plugged.

★If the relief port becomes plugged, the brake pads will drag on the disc. Blow the ports clean with compressed air.

- Check the piston return spring [H] for any damage.

★If the spring is damaged, replace it.

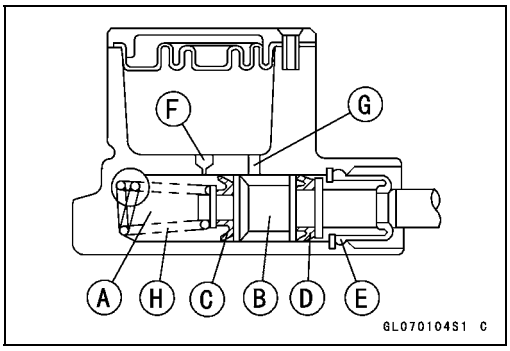

Calipers

Front Brake Caliper Removal

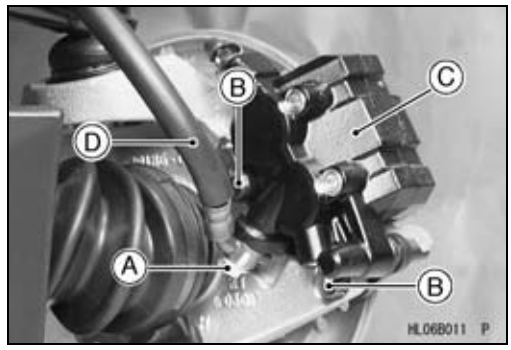

- Remove the front wheel (see Wheel Removal in the Wheels/Tires chapter).
- Loosen the banjo bolt [A] at the brake hose lower end, and tighten it loosely.
- Unscrew the caliper mounting bolts [B], and detach the caliper [C] from the disc.
- Unscrew the banjo bolt and remove the brake hose [D] from the caliper.

CAUTION

Immediately wash away any brake fluid that spills.

NOTE

○*If the caliper is to be disassembled after removal and if compressed air is not available, disassemble the caliper before the brake hose is removed (see Front Brake Caliper Disassembly).*

Front Brake Caliper Installation

- Install the caliper and brake hose lower end.

○Replace the washers that are on each side of hose fitting with new ones.

- Tighten:

Torque - Front Brake Caliper Mounting Bolts: 25 N·m (2.5 kgf·m, 18 ft·lb)
Front Brake Hose Banjo Bolt: 25 N·m (2.5 kgf·m, 18 ft·lb)

- Check the fluid level in the brake reservoir.
- Bleed the brake line (see Front Brake Line Air Bleeding).
- Check the brake for good braking power, no brake drag, and no fluid leakage.

⚠ WARNING

Do not attempt to drive the vehicle until a firm brake lever can be obtained by pumping the brake lever until the pads are against each disc. The brakes will not function on the first application of the lever if this is not done.

Calipers

Front Brake Caliper Disassembly

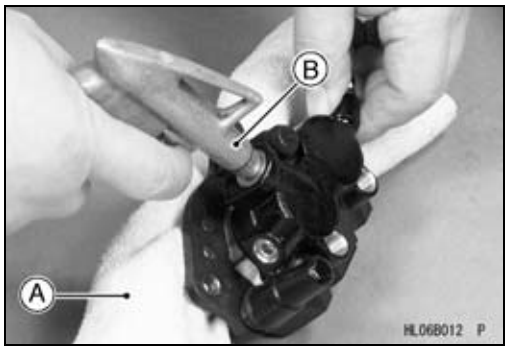

- Remove:
  Caliper (see Front Brake Caliper Removal)
  Pads (see Front Brake Pad Removal)
  Anti-rattle Spring
- Using compressed air, remove the piston.

○Cover the caliper opening with a clean, heavy cloth [A].
○Remove the piston by lightly applying compressed air [B] to where the brake line fits into the caliper.

⚠ WARNING

To avoid serious injury, never place your fingers or palm inside the caliper opening. If you apply compressed air into the caliper, the piston may crush your hand or fingers.

NOTE

○*If compressed air is not available, do as follows with the brake hose connected to the caliper.*
○*Prepare a container for brake fluid.*
○*Remove the pads (see Front Brake Pad Removal) and anti-rattle spring.*
○*Pump the brake lever to remove the caliper piston.*

- Remove:
  Dust Seals [A]
  Fluid Seals [B]
  Bleed Valve [C] and Rubber Cap [D]
  Boots [E] and Caliper Holder [F]

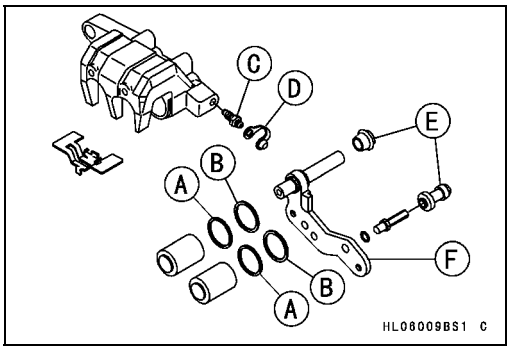

Front Brake Caliper Assembly

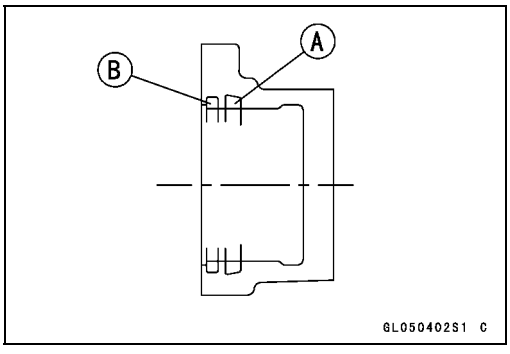

- Replace the fluid seal [A] with a new one.

○Apply brake fluid to the fluid seal, and install it into the cylinder by hand.

- Replace the dust seal [B] with a new one if it is damaged.

○Apply brake fluid to the dust seal, and install it into the cylinder by hand.

Calipers

- Apply brake fluid to the outside of the pistons [A], and push them into the cylinder by hand. Take care that neither the cylinder nor the piston skirt gets scratched.
- Replace the rubber boots [B] if they are damaged.
- Apply a thin coat of silicone grease to the caliper holder shafts [C] [D] (Silicone grease is a special high temperature, water-resistant grease).
- Install:
  Wave Washer [E]
- Tighten:

  Torque - Front Brake Caliper Holder Shaft [D]: 17 N·m (1.7 kgf·m, 13 ft·lb)

- Install:
  Caliper Holder [F]
  Bleed Valve [G] and Rubber Cap

  Torque - Bleed Valves: 7.8 N·m (0.80 kgf·m, 69 in·lb)

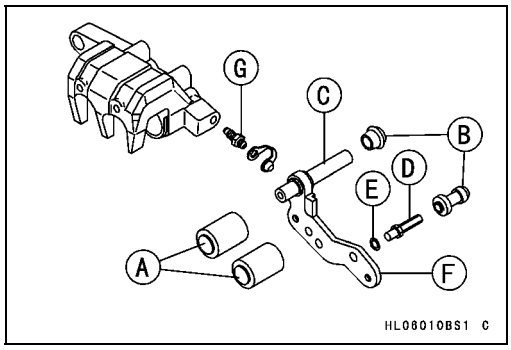

- Install the anti-rattle spring [A] in the caliper as shown.
- Install the pads (see Front Brake Pad Installation).

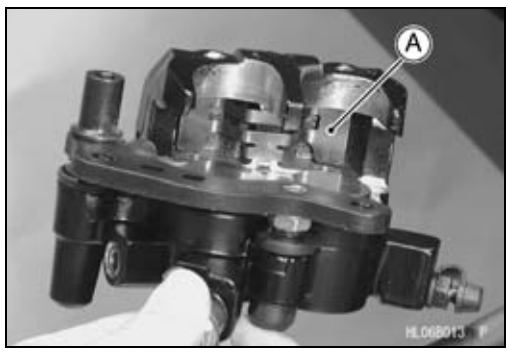

Front Brake Caliper Piston and Cylinder Damage Inspection

- Visually inspect the piston [A] and cylinder surfaces [B].

★Replace the caliper if the cylinder and piston are badly scored or rusty.

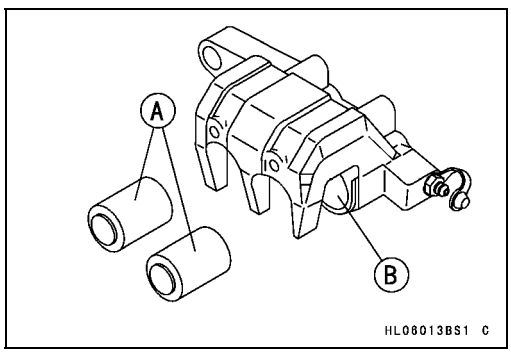

Front Brake Caliper Holder Shaft Wear Inspection

The caliper body must slide smoothly on the caliper holder shafts [A]. If the body does not slide smoothly, one pad will wear more than the other, pad wear will increase, and constant drag on the disc will raise brake and brake fluid temperature.

- Check to see that the caliper holder shafts are not badly worn or stepped, and that the rubber boots [B] are not damaged.

★If the rubber boot is damaged, replace the rubber boot.

★If caliper holder shaft is damaged, replace the caliper holder shaft and rubber boot as a unit.

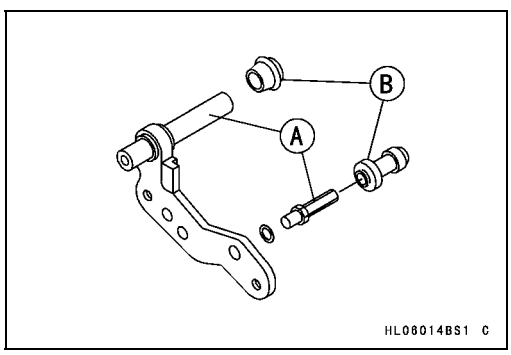

Brake Pads

Front Brake Pad Removal

- Detach the caliper from the disc (see Front Brake Caliper Removal).
- Remove:
  Pad Mounting Bolts [A]

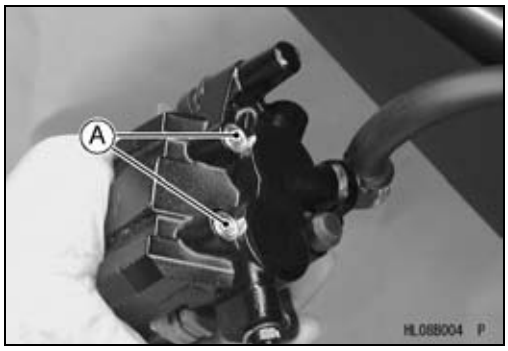

- Remove:
  Brake Pads [A]

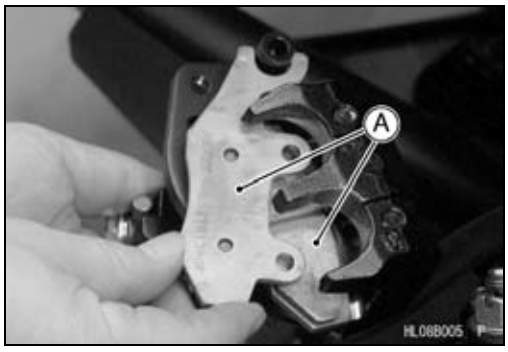

Front Brake Pad Installation

- Push the caliper piston in by hand as far as it will go.
- Be sure that the anti-rattle spring is in place.
- Install:
  Brake Pads
  Pad Mounting Bolts
- Tighten:

Torque - Front Brake Pad Mounting Bolts: 17 N·m (1.7 kgf·m, 13 ft·lb)

⚠ WARNING

Do not attempt to drive the vehicle until a firm brake lever can be obtained by pumping the brake lever until the pads are against each disc. The brake will not function on the first application if this is not done.

Front Brake Pad Wear Inspection

- Refer to the Front Brake Pad Wear Inspection in the Periodic Maintenance chapter.

Brake Discs

Front Brake Disc Cleaning

Poor braking can be caused by oil on a disc. Oil on a disc must be cleaned off with an oilless cleaning fluid such as trichloroethylene or acetone.

⚠ WARNING

These cleaning fluids are usually highly flammable and harmful if breathed for prolonged periods. Be sure to heed the fluid manufacturer's warnings.

Front Brake Disc Removal

- Remove:
  Front Hub (see Front Hub Removal in the Wheels/Tires chapter)
  Brake Disc Mounting Bolts [A]
  Brake Disc [B]

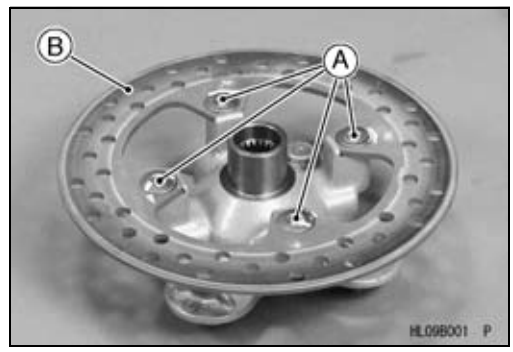

Front Brake Disc Installation

- The disc must be installed with the marked side [A] facing toward the steering knuckle.
- Apply a non-permanent locking agent to the brake disc mounting bolts.
- Tighten:

  Torque - Front Brake Disc Mounting Bolts: 37 N·m (3.8 kgf·m, 27 ft·lb)

- After installing the discs, check the disc runout. Completely clean off any grease that has gotten on either side of the disc with a high-flash point solvent. Do not use one which will leave an oily residue.

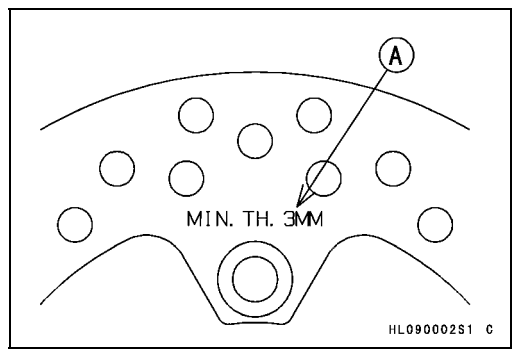

Front Brake Disc Wear Inspection

- Measure the thickness of each disc at the point [A] where it has worn the most.

★Replace the disc if it has worn past the service limit.

Disc Thickness

Standard:	**3.3 ~ 3.7 mm (0.130 ~ 0.146 in.)**
Service Limit:	**3 mm (0.12 in.)**

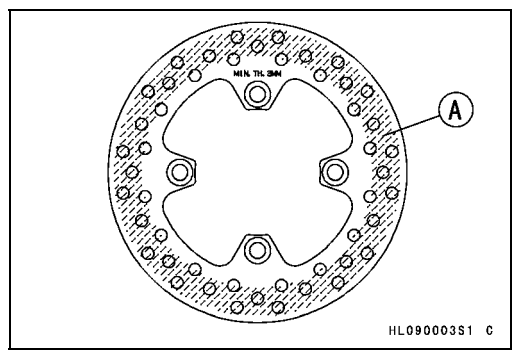

Front Brake Disc Runout Inspection

- Jack up the vehicle so that the wheels are off the ground.
- Remove the front wheels and turn the handlebar fully to one side.
- Set up a dial gauge against the disc [A], and measure the disc runout.

★If the runout exceeds the service limit, replace the disc.

Disc Runout

Standard:	**TIR 0.4 mm (0.016 in.) or less**
Service Limit:	**TIR 0.5 mm (0.020 in.)**

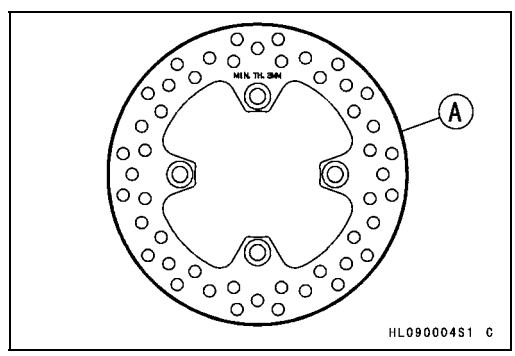

Brake Hoses

Front Brake Hose Inspection

- Refer to the Front Brake Hose and Connections Inspection in the Periodic Maintenance chapter.

Front Brake Hose Replacement

- Refer to the Front Brake Hose Replacement in the Periodic Maintenance chapter.

Rear Brake Lever, Pedal and Cables

Rear Brake Pedal Position Inspection

NOTE

○*The position of the brake pedal has been decided by the position of the adjusting bolt [A].*

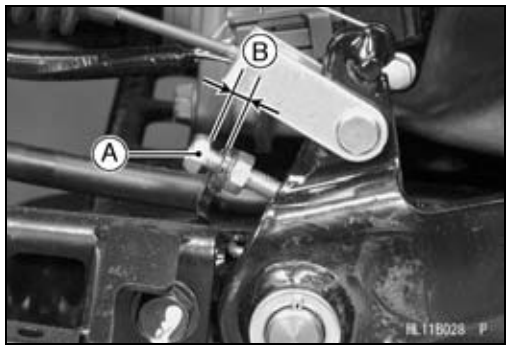

- Check that the adjusting bolt is in the correct position as shown.

  Adjusting Bolt Position [B]

  Standard: 5 ~ 6 mm (0.20 ~ 0.24 in.) (between Frame and Adjusting Bolt Head)

★If it is incorrect, adjust the adjusting bolt.

Rear Brake Pedal Position Adjustment

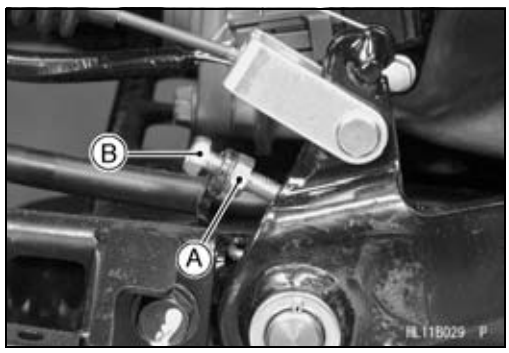

- Remove:
  Right Footboard (see Right Footboard Removal in the Frame chapter)
- Loosen the locknut [A], and turn the adjusting bolt [B] until the brake pedal is correctly positioned.
- Tighten the locknut.
- Check the brake pedal free play (see Rear Brake Pedal Free Play Inspection in the Periodic Maintenance chapter).

Rear Brake Lever Free Play Inspection

- Refer to the Rear Brake Lever Free Play Inspection in the Periodic Maintenance chapter.

Rear Brake Pedal Free Play Inspection

- Refer to the Rear Brake Pedal Free Play Inspection in the Periodic Maintenance chapter.

Rear Brake Lever and Brake Pedal Free Play Adjustment

- Refer to the Rear Brake Lever and Pedal Free Play Adjustment in the Periodic Maintenance chapter.

Rear Brake Pedal Removal

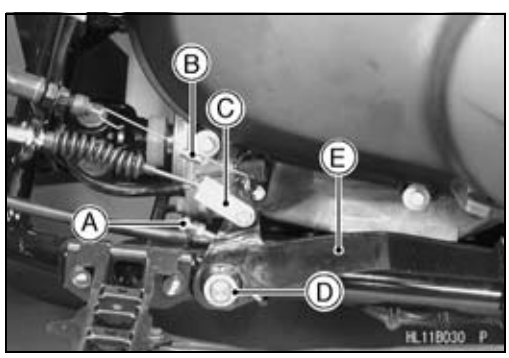

- Remove:
  Right Footboard (see Right Footboard Removal in the Frame chapter)
- Loosen the locknut and the adjusting bolt [A].
- Remove:
  Brake Switch Spring [B]
  Cotter Pin, Washer, Pin and Brake Cable Joint [C]
  Cotter Pin and Washer [D]
  O-ring and Brake Pedal [E]
  Spring

Rear Brake Lever, Pedal and Cables

Rear Brake Pedal Installation

- Apply grease:
  Brake Pedal Pivot [A]
  O-ring [B]

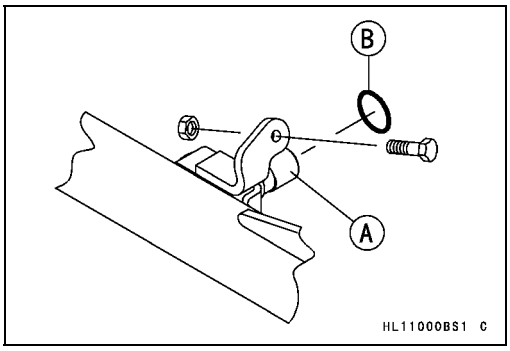

- Install:
  Spring [A]
  Brake Pedal [B]
- Apply grease:
  O-rings [C]
- Install:
  Brake Cable Joint and Pin [D]
  Brake Switch Spring [E]
  Washers [F]
- Replace the cotter pins [G] with new ones.
- Bend both side hooks [H] of switch spring [E] after installing the spring.
- Adjust the brake pedal position (see Rear Brake Pedal Position Adjustment).

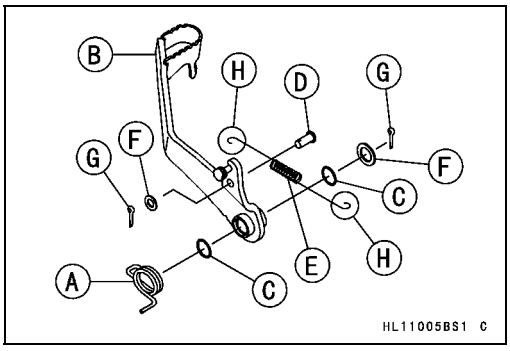

Rear Brake Cable Removal

- Remove:
  Right Rear Flap
- Unscrew the adjusters [A] at the rear ends of the cables, and pull the cables out of the joints [B] and cable mounts.

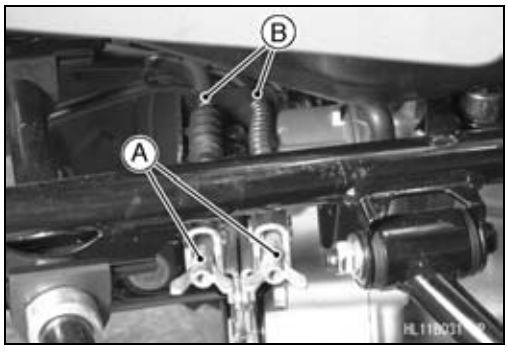

- Loosen the knurled locknut [A] at the rear brake lever and screw in the adjuster [B].
- Line up the slots [C] in the brake lever, knurled locknut, and adjuster, and then free the cable from the lever [D].
- Remove the brake lever cable from the frame.

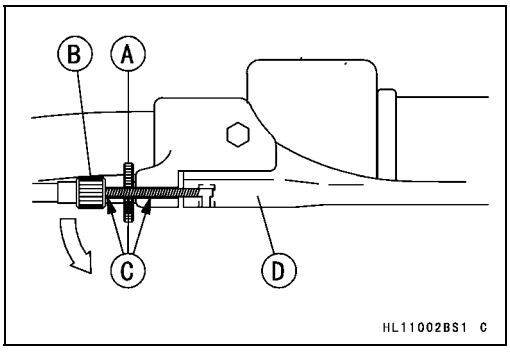

Rear Brake Lever, Pedal and Cables

- Remove:
  Circlip [A]
  Cotter Pin, Washer and Pin [B]
  Brake Pedal Cable [C]

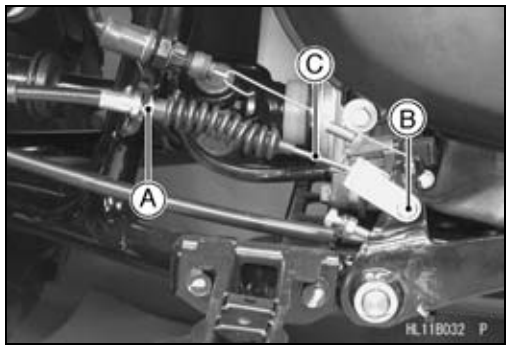

Rear Brake Cable Installation
- Grease the brake cable front ends.
- Replace the cotter pin with a new one.
- Route the brake cables according to the Cable, Wire, and Hose Routing section in the Appendix chapter.
- Adjust the rear brake pedal and rear brake lever.

Rear Brake Cable Lubrication

Whenever the brake cable is removed, lubricate the cable as follows:
- Lubricate the cable with an aerosol cable lubricant through the pressure cable luber.

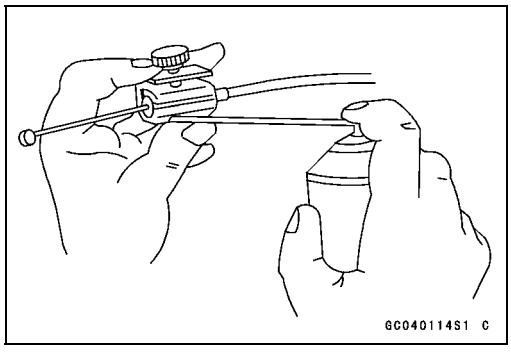

Internal Wet Brake

Internal Wet Brake Disassembly

- Refer to Rear Final Gear Case section in the Final Drive chapter.

Internal Wet Brake Assembly

- Refer to Rear Final Gear Case section in the Final Drive chapter.

Suspension

Table of Contents

Exploded View

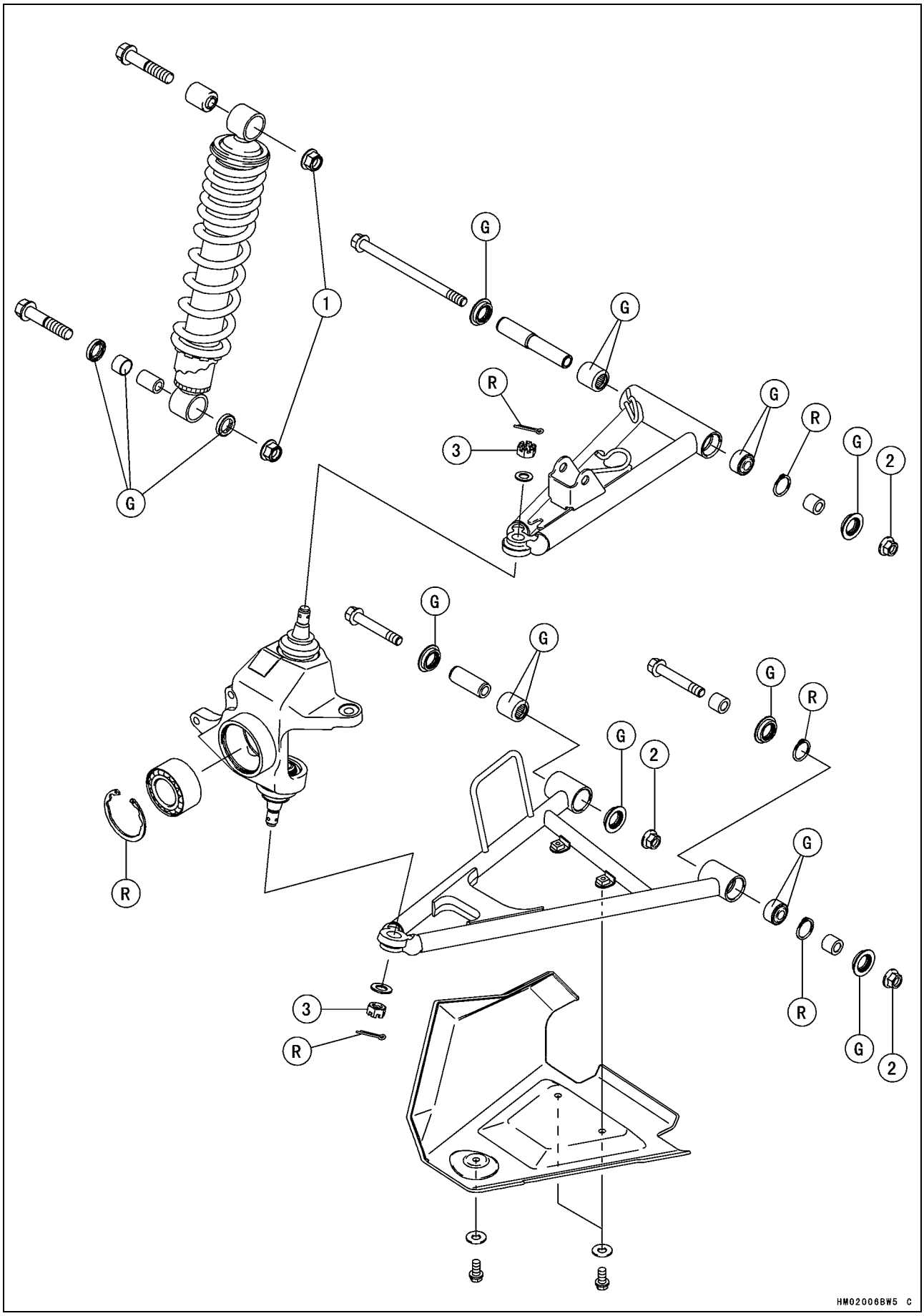

Exploded View

No.	Fastener	Torque			Remarks
		N·m	kgf·m	ft·lb	
1	Front Shock Absorber Mounting Nuts	34	3.5	25	
2	Front Suspension Arm Pivot Nuts	42	4.3	31	
3	Steering Knuckle Joint Nuts	29	3.0	22	

G: Apply grease.
R: Replacement Parts

Exploded View

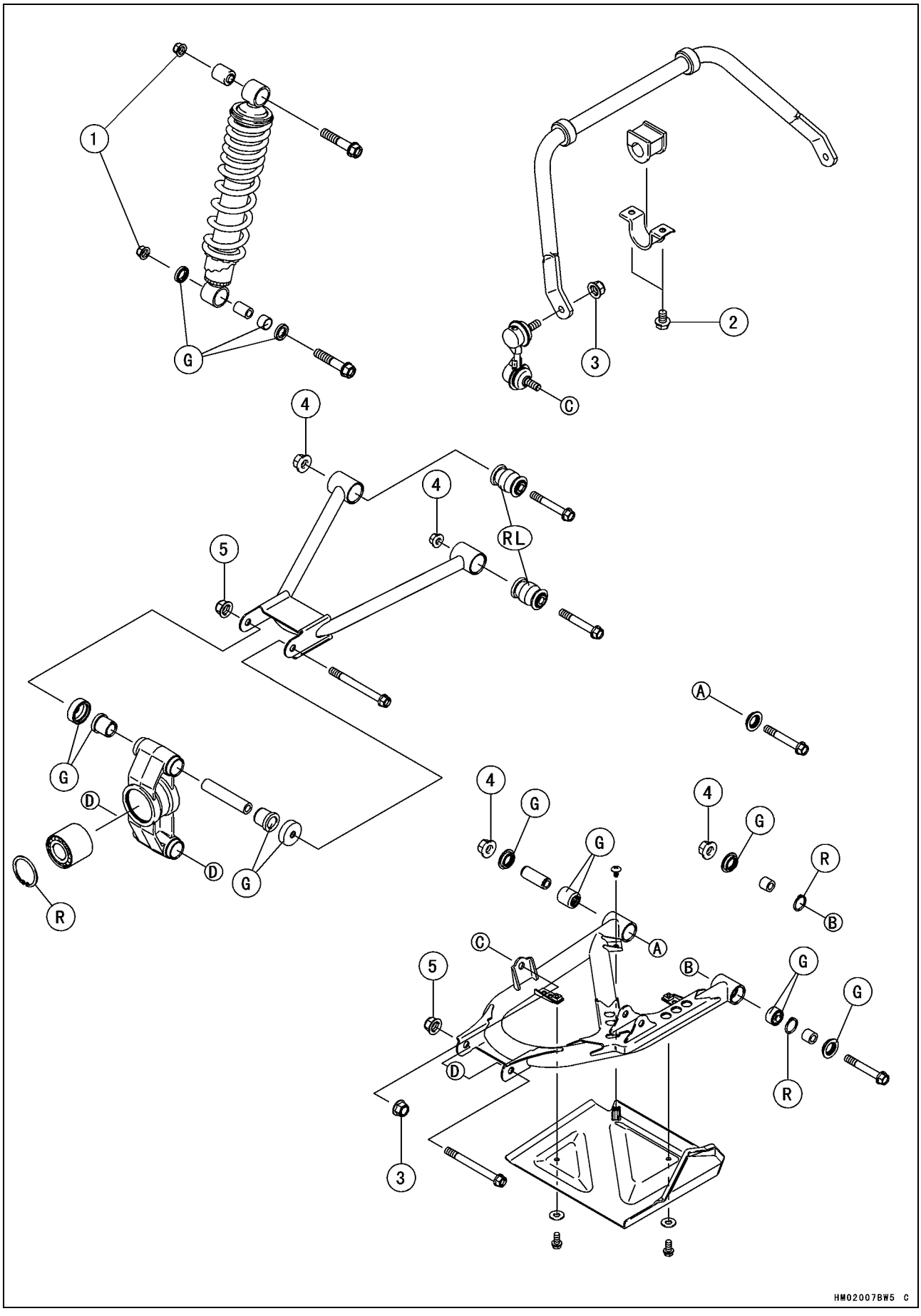

Exploded View

No.	Fastener	Torque			Remarks
		N·m	kgf·m	ft·lb	
1	Rear Shock Absorber Mounting Nuts	34	3.5	25	
2	Stabilizer Holder Bolts	23	2.3	17	
3	Stabilizer Joint Nuts	48	4.9	35	
4	Rear Suspension Arm Pivot Nuts	48	4.9	35	
5	Rear Knuckle Mounting Nuts	48	4.9	35	

G: Apply grease.
R: Replacement Parts
RL: Apply rubber lubricant.

Specifications

Item	Standard	Service Limit
Shock Absorbers		**(Usable Range)**
Spring Preload Setting Position (Front and Rear)	First Step	1 ~ 5

Special Tools

Inside Circlip Pliers:
57001-143

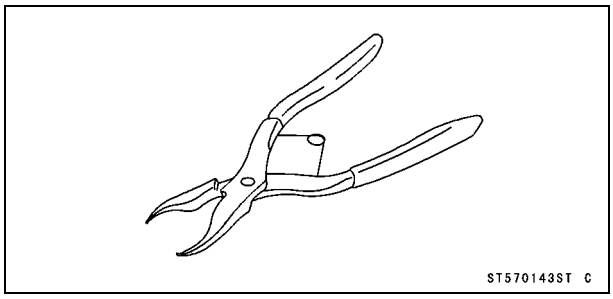

Outside Circlip Pliers:
57001-144

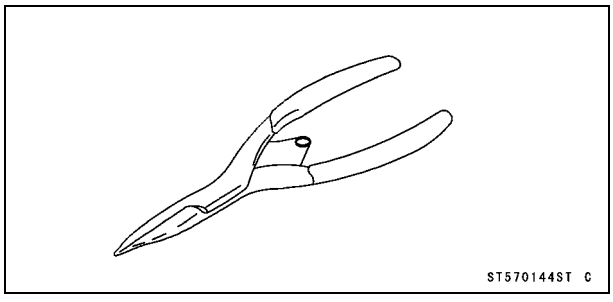

Steering Stem Nut Wrench:
57001-1100

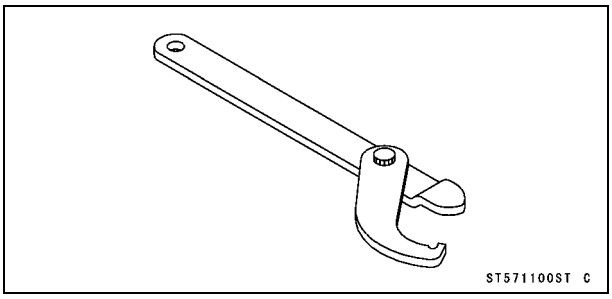

Jack:
57001-1238

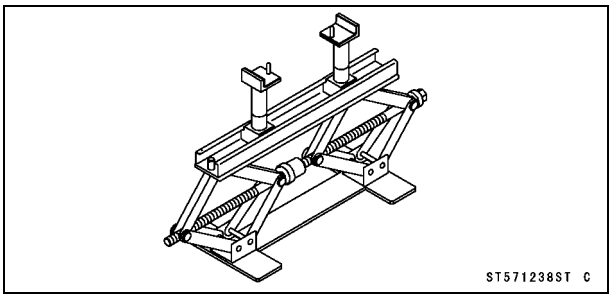

Shock Absorbers

Front Shock Absorber Preload Adjustment

The spring adjusting sleeve [A] on the front shock absorber has 5 positions so that the spring can be adjusted for different terrain and loading conditions. If the spring action feels too soft or too stiff, adjust it in accordance with the following table.

Spring Action

Position	Spring Force	Setting	Load	Terrain	Speed
1 (STD)	Weak	Soft	Light	Smooth	Low
2	↑	↑	↑	↑	↑
3					
4	↓	↓	↓	↓	↓
5	Strong	Hard	Heavy	Rough	High

- Turn the adjusting sleeve on the front shock absorber to the desired position with the wrench.

  Special Tool - Steering Stem Nut Wrench: 57001-1100

Front Shock Absorber Removal

- Support the vehicle on a stand or a jack so that the front wheels are off the ground.

  Special Tool - Jack: 57001-1238
- While holding the front wheels, remove the lower and upper shock absorber mounting bolts [A], nuts, and washers.
- Remove the front shock absorber [B].

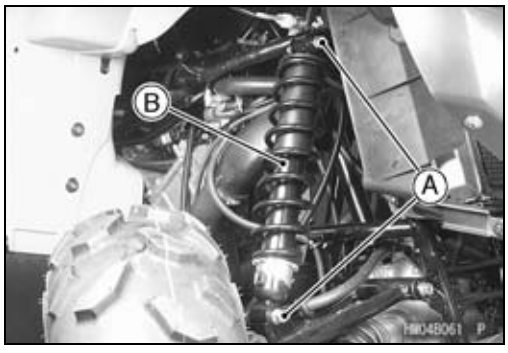

Front Shock Absorber Installation

- Apply grease to the inside of bushing [A] and grease seal lips [B].
- Install:
  Collar [C]

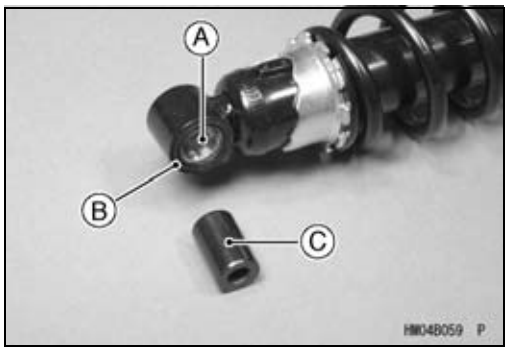

- Install:
  Bushing [A] (press)
- Tighten:

  Torque - Front Shock Absorber Mounting Nuts [B]: 34 N·m (3.5 kgf·m, 25 ft·lb)

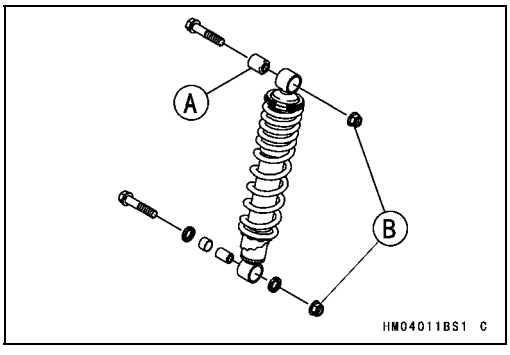

Shock Absorbers

Front Shock Absorber Inspection

- Check the bushings [A] in the upper and lower pivots.

★If bushings are worn, cracked, hardened, or otherwise damaged, replace them.

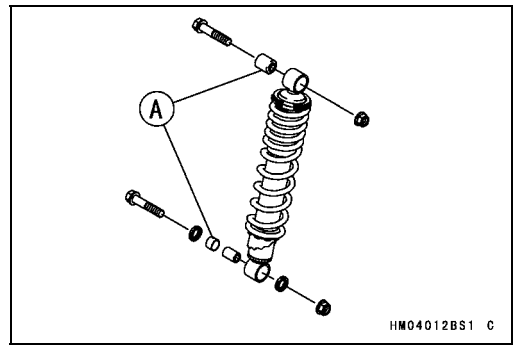

Front Shock Absorber Scrapping

⚠ WARNING

Since the front shock absorber contains nitrogen gas, do not incinerate or disassemble the front shock absorber.
Before a front shock absorber is scrapped, drill a hole at a point about 15 mm (0.59 in.) [A] up from the bottom of the cylinder to release the nitrogen gas completely. Wear safety glasses when drilling the hole, as the gas may blow out bits of drilled metal when the hole opens.

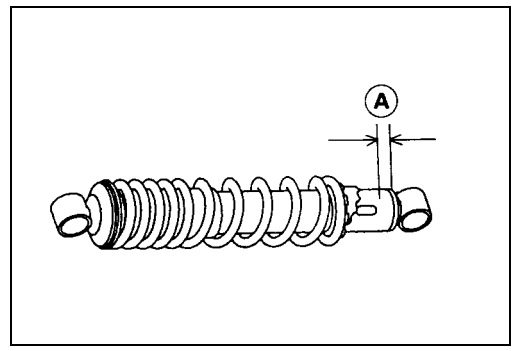

Rear Shock Absorber Preload Adjustment

The spring adjusting sleeve [A] on the rear shock absorber has 5 positions so that the spring can be adjusted for different terrain and loading conditions. If the spring action feels too soft or too stiff, adjust it in accordance with the following table.

Spring Action

Position	Spring Force	Setting	Load	Terrain	Speed
1 (STD)	Weak	Soft	Light	Smooth	Low
2	↑	↑	↑	↑	↑
3					
4	↓	↓	↓	↓	↓
5	Strong	Hard	Heavy	Rough	High

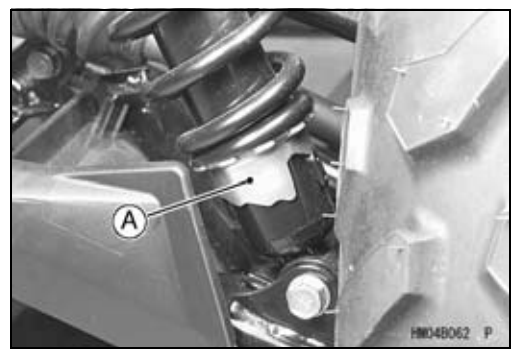

- Remove the axle guard.
- Turn the adjusting sleeve on the rear shock absorber to the desired position with the wrench.

Special Tool - Steering Stem Nut Wrench: 57001-1100

Rear Shock Absorber Removal

- Support the vehicle on a stand or a jack so that the rear wheels are off the ground.

Special Tool - Jack: 57001-1238

- While holding the rear wheels, remove the lower and upper shock absorber mounting bolts [A], nuts, and washers.
- Remove the rear shock absorber [B].

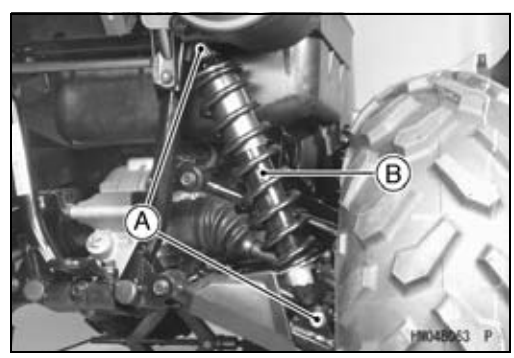

Shock Absorbers

Rear Shock Absorber Installation

- Apply grease to the inside of bushing [A] and grease seal lips [B].
- Install:
  Collar [C]

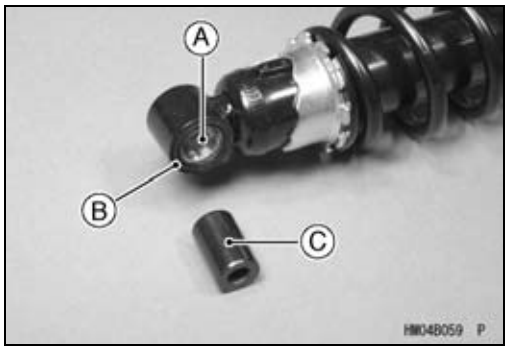

- Install:
  Bushing [A] (press)
- Tighten:

Torque - Rear Shock Absorber Mounting Nuts [B]: 34 N·m (3.5 kgf·m, 25 ft·lb)

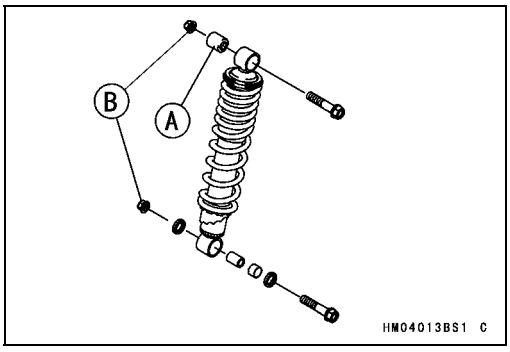

Rear Shock Absorber Inspection

- Check the bushings [A] in the upper and lower pivots.

★If bushings are worn, cracked, hardened, or otherwise damaged, replace them.

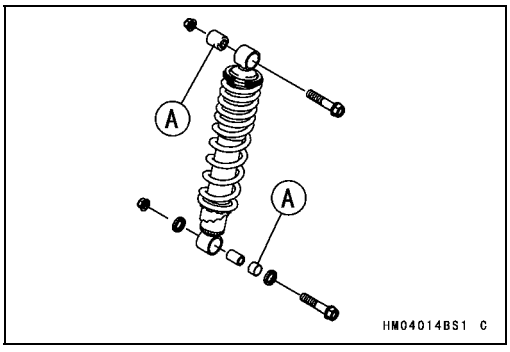

Rear Shock Absorber Scrapping

⚠ WARNING

Since the rear shock absorber contains nitrogen gas, do not incinerate or disassemble the rear shock absorber.
Before a rear shock absorber is scrapped, drill a hole at a point about 15 mm (0.59 in.) [A] up from the bottom of the cylinder to release the nitrogen gas completely. Wear safety glasses when drilling the hole, as the gas may blow out bits of drilled metal when the hole opens.

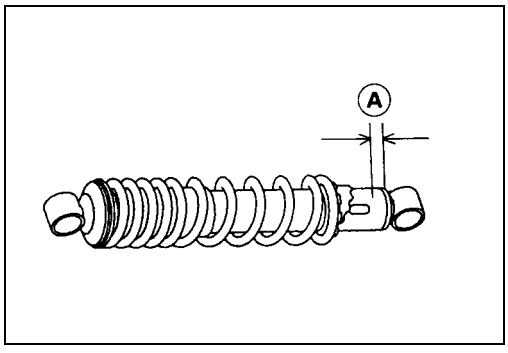

Suspension Arms

Front Suspension Arm Removal

- Remove:
  Front Wheels (see Wheel Removal in the Wheels/Tires chapter)
  Wheel Hub [A]
  Bolt [B] and Brake Hose [C] (from Suspension Arm)
  Brake Caliper (from Brake Disk)
  Knuckle Joint Nuts [D] (see Steering Knuckle Removal in the Steering chapter)
  Front Shock Absorber Mounting Bolt [E] (lower)

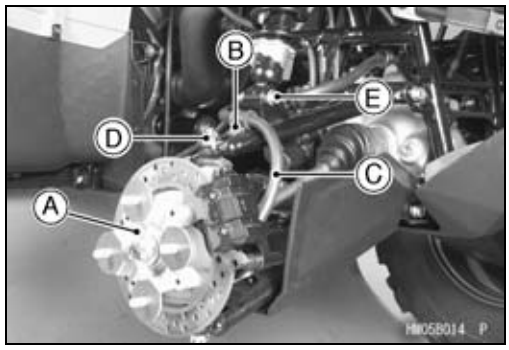

- Remove:
  Suspension Arm Pivot Bolt [A]
  Front Upper Suspension Arm [B]

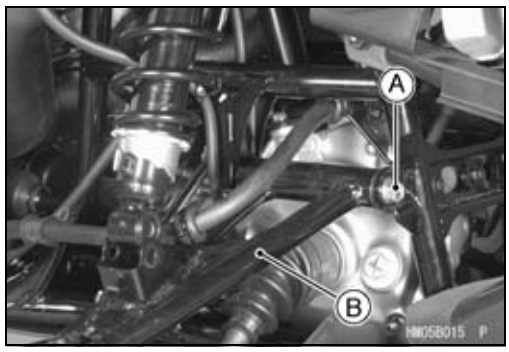

- Remove:
  Tie-rod End
  Guard Bolts [A]
  Suspension Arm Pivot Bolts [B]
  Front Lower Suspension Arm [C] and Knuckle

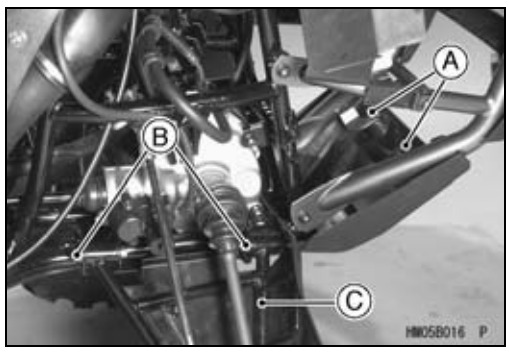

- Remove the knuckle joint [A] from the suspension arm [B] using a suitable nut [C] as shown.

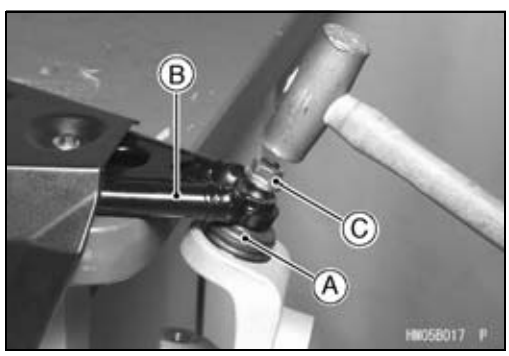

Front Suspension Arm Installation

- Clean the taper surface [A] of the suspension arm [B] and shank of the knuckle joint.
- Install:
  Front Upper Suspension Arm
  Front Lower Suspension Arm
  Suspension Arm Pivot Bolts and Nuts (temporary)
  Steering Knuckle Joint (see Steering Knuckle Installation in the Steering chapter)
  Front Shock Absorber Mounting Bolt (lower)

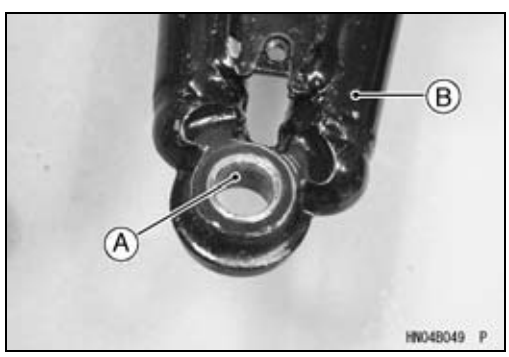

Suspension Arms

- Tighten:

Torque - Front Suspension Arm Pivot Nuts: 42 N·m (4.3 kgf·m, 31 ft·lb)
Steering Knuckle Joint Nuts: 29 N·m (3.0 kgf·m, 22 ft·lb)
Front Shock Absorber Mounting Bolt: 34 N·m (3.5 kgf·m, 25 ft·lb)

- Install:
  Brake Hose
  Front Wheels (see Wheel Installation in the Wheels/Tires chapter)

Front Suspension Arm Disassembly

Front Upper Suspension Arm

- Remove:
  Collar [A] (rear side)
  Sleeve [B] (front side)
  Oil Seals [C]
  Circlip [D]

Special Tool - Inside Circlip Pliers: 57001-143

- Remove:
  Ball Joint Bearing [E] (rear side)
  Needle Bearing [F] (front side)

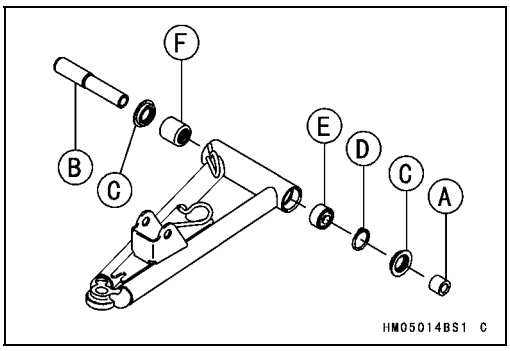

Front Lower Suspension Arm

- Remove:
  Bolts [A]
  Collar [B]
  Axle Guard [C]
  Collars [D] (rear side)
  Oil Seals [E]
  Circlips [F]

Special Tool - Inside Circlip Pliers: 57001-143

- Remove:
  Ball Joint Bearing [G] (rear side)
  Sleeve [H] (front side)
  Needle Bearing [I] (front side)

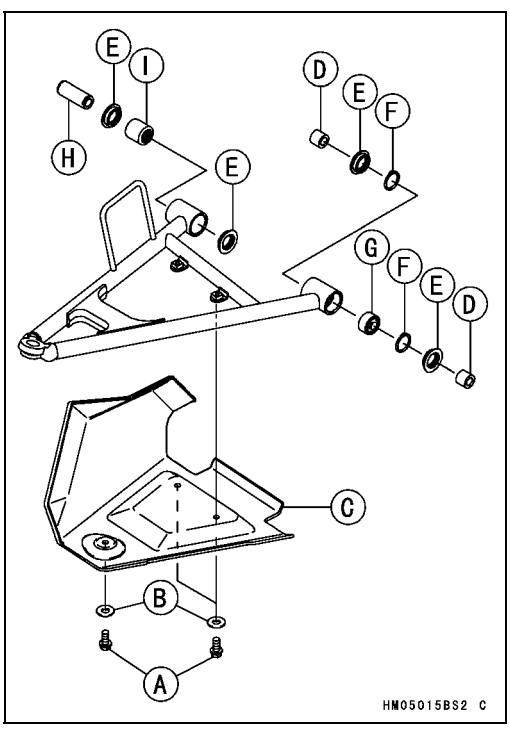

Front Suspension Arm Assembly

- Apply grease:
  Ball Joint Bearing
  Needle Bearing

Suspension Arms

● Install the following parts as shown.

Front Upper Suspension Arm

Front [A]

● Press the needle bearing [B] until it is stopped.

● Press the ball joint bearing [C] until it is stopped.

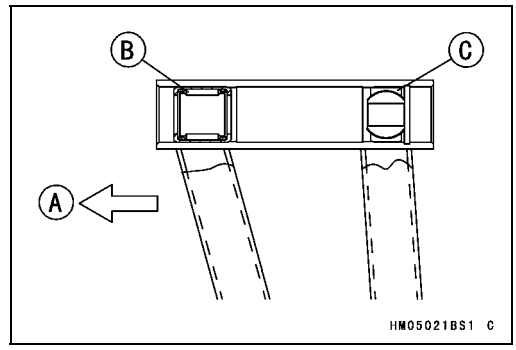

● Install:

New Circlip

Special Tool - Inside Circlip Pliers: 57001-143

● Apply grease:

Oil Seal Lips

● Install:

Sleeve (front side)

Collar (rear side)

● Install the following parts as shown.

Front Lower Suspension Arm

Front Side [A]:

Needle Bearing [B]

7.5 ±0.1 mm (0.295 ±0.004 in.) [C]

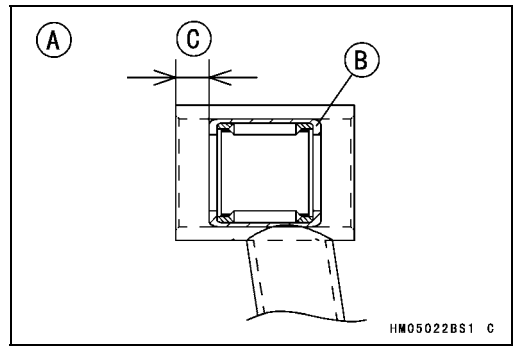

Rear Side [A]:

Circlip [B] (front side)

Ball Joint Bearing [C]

Circlip [D] (rear side)

Special Tool - Inside Circlip Pliers: 57001-143

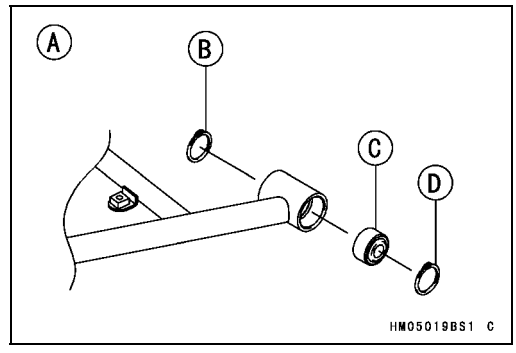

● Apply grease:

Oil Seal Lips

● Install:

Sleeve (front side)

Collars (rear side)

Suspension Arms

Rear Suspension Arm Removal

● Remove:
Rear Wheels (see Wheel Removal in the Wheels/Tires chapter)
Mounting Bolts and Nuts [A]
Rear Upper Suspension Arm [B]

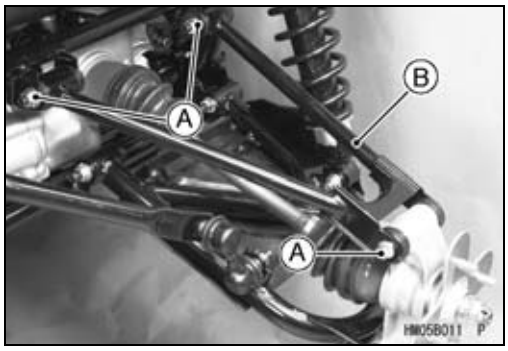

● Remove:
Stabilizer Joint [A]
○Hold the joint bolt with an Allen wrench [B], and remove the nut [C].

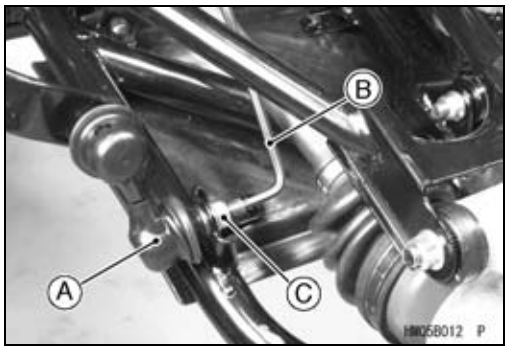

● Remove:
Mounting Bolts and Nuts [A]
Rear Lower Suspension Arm [B]

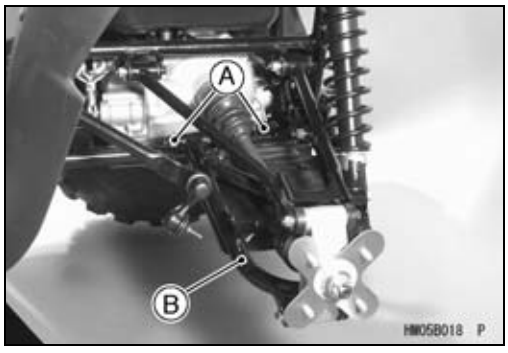

Rear Suspension Arm Installation

● Install:
Rear Upper Suspension Arm
Rear Lower Suspension Arm
Suspension Arm Pivot Bolts and Nut (temporary)
Rear Shock Absorber Mounting Bolt (lower)
Stabilizer Joint

● Tighten:

Torque - Rear Suspension Arm Pivot Nuts: 48 N·m (4.9 kgf·m, 35 ft·lb)
Rear Shock Absorber Mounting Nuts: 34 N·m (3.5 kgf·m, 25 ft·lb)
Stabilizer Joint Nut: 48 N·m (4.9 kgf·m, 35 ft·lb)
Rear Knuckle Mounting Nuts: 48 N·m (4.9 kgf·m, 35 ft·lb)

○Hold the joint bolt with an Allen wrench, and tighten the nut.

● Install:
Front Wheels (see Wheel Installation in the Wheels/Tires chapter)

Suspension Arms

Rear Suspension Arm Disassembly

Rear Upper Suspension Arm

- Remove out the bushings [A]

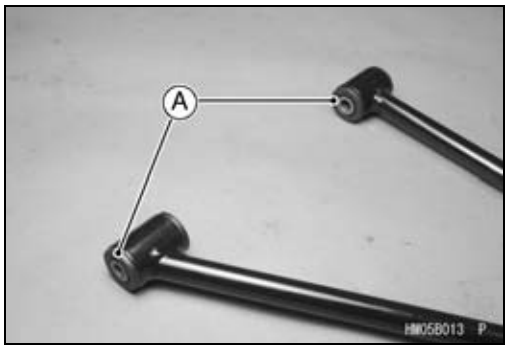

Rear Lower Suspension Arm

- Remove:
  Screw [A]
  Bolts [B]
  Collars [C]
  Axle Guard [D]
  Collars [E] (rear side)
  Oil Seals [F]
  Circlips [G]

Special Tool - Outside Circlip Pliers: 57001-144

- Remove:
  Ball Joint Bearing [H] (rear side)
  Sleeve [I] (front side)
  Needle Bearing [J] (front side)

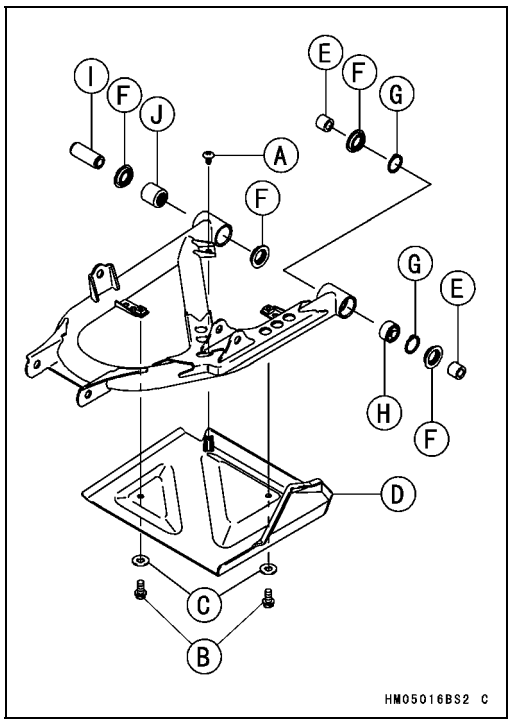

Rear Suspension Arm Assembly

- Apply grease:
  Ball Joint Bearing
  Needle Bearing

Rear Upper Suspension Arm

- Install the bushings [A] using a press.

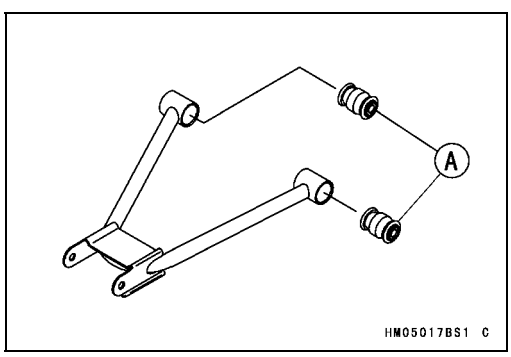

Suspension Arms

Rear Lower Suspension Arm

- Install the following parts as shown.
  Front Side [A]:
    Needle Bearing [B]
    7.5 ±0.1 mm (0.295 ±0.004 in.) [C]

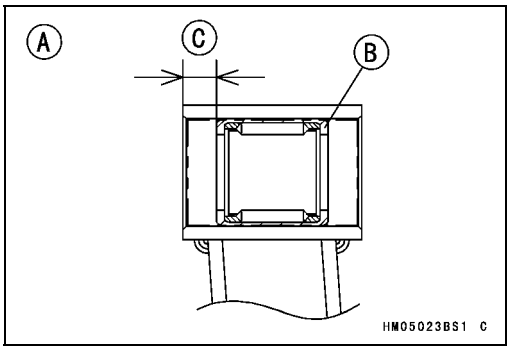

  Rear Side [A]:
    Circlip [B] (front side)
    Ball Joint Bearing [C]
    Circlip [D] (rear side)

Special Tool - Inside Circlip Pliers: 57001-143

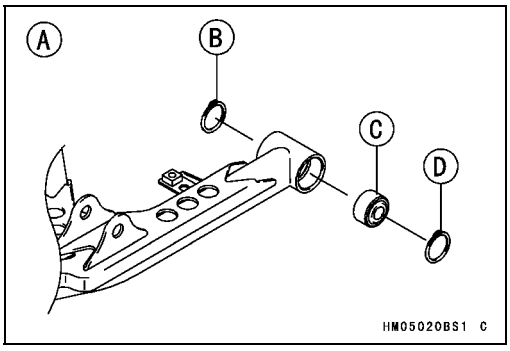

- Apply grease:
  Oil Seal Lips
- Install:
  Sleeve (front side)
  Collars (rear side)

Stabilizer Removal

- Remove:
  Rear Wheels (see Wheel Removal in the Wheels/Tires chapter)
  Stabilizer Joint [A]

○Hold the joint bolt with an Allen wrench [B], and remove the nut [C].

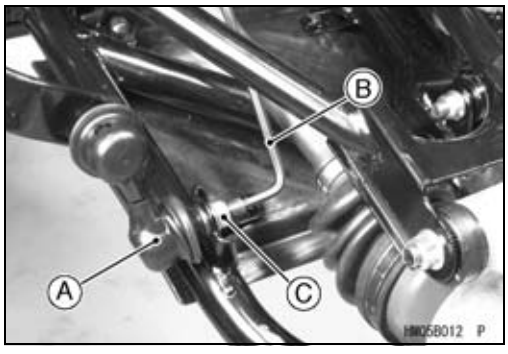

- Remove:
  Stabilizer Holder Bolts [A]
  Stabilizer Holders [B]
  Dampers and Stabilizer [C]

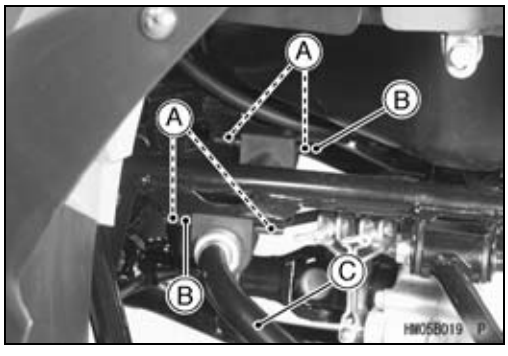

Suspension Arms

Stabilizer Installation

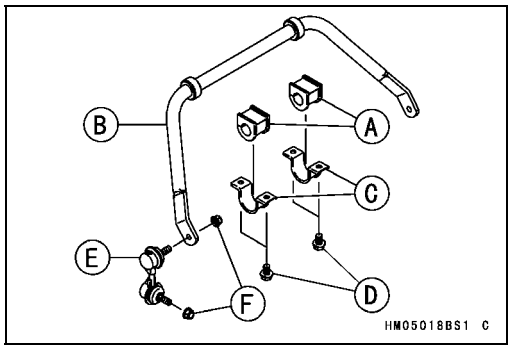

- Install:
  Dampers [A] and Stabilizer [B]
  Stabilizer Holders [C] and Bolts
- Tighten:

  Torque - Stabilizer Holder Bolts [D]: 23 N·m (2.3 kgf·m, 17 ft·lb)

- Install:
  Stabilizer Joints [E]

○Hold the joint bolt with an Allen wrench, and tighten the nut.

Torque - Stabilizer Joint Nuts [F]: 48 N·m (4.9 kgf·m, 35 ft·lb)

- Install:
  Rear Wheels (see Wheel Installation in the Wheels/Tires chapter)

Steering

Table of Contents

Exploded View

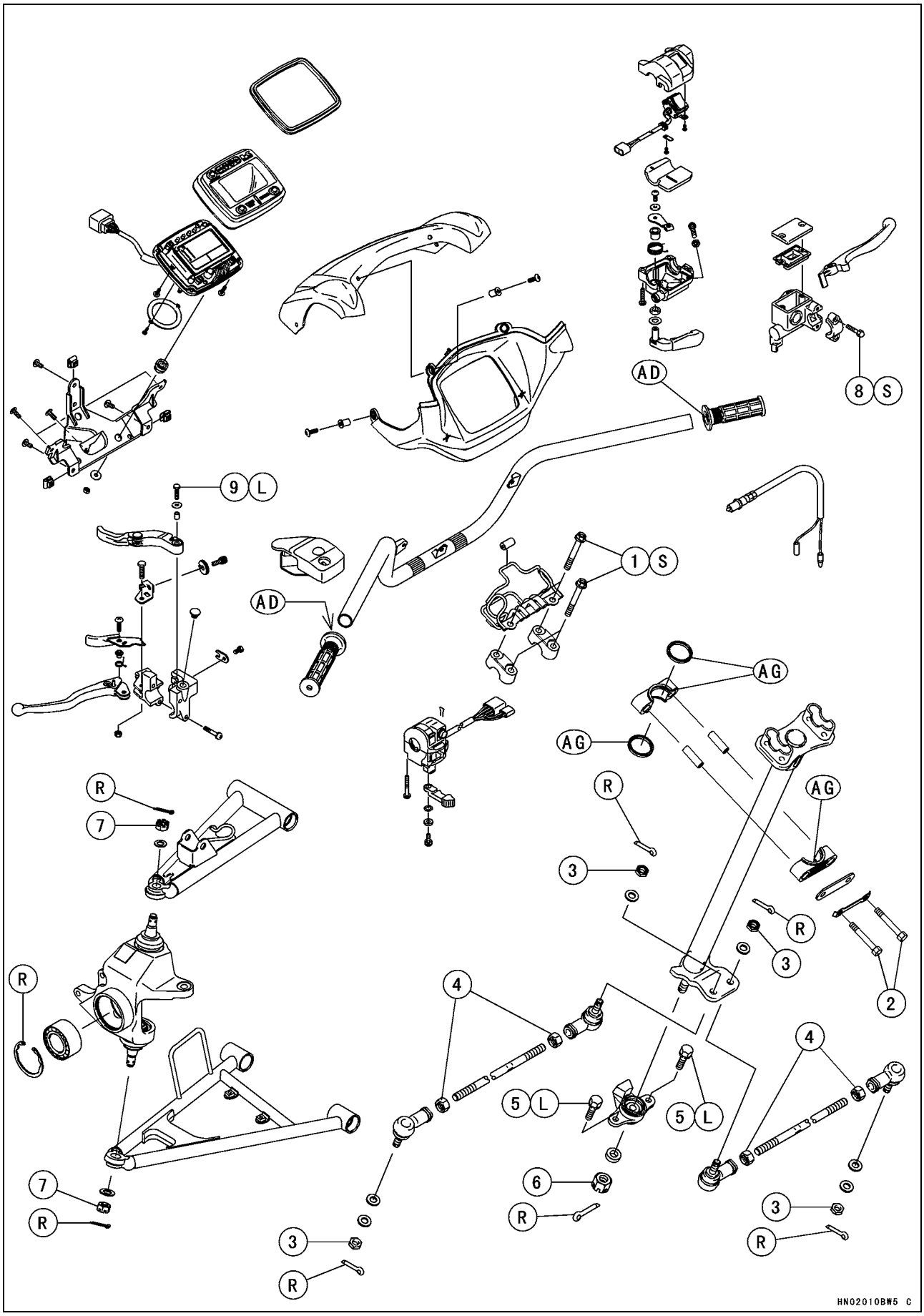

Exploded View

No.	Fastener	Torque			Remarks
		N·m	kgf·m	ft·lb	
1	Handlebar Holder Bolts	29	3.0	22	S
2	Steering Stem Clamp Bolts	25	2.5	18	
3	Tie-rod End Nuts	42	4.3	31	
4	Tie-rod Locknuts	37	3.8	27	
5	Steering Stem Bearing Joint Bolts	23	2.3	17	L
6	Steering Stem Bottom End Nut	62	6.3	46	
7	Steering Knuckle Joint Nuts	29	3.0	22	
8	Front Brake Master Cylinder Clamp Bolts	9.0	0.92	80 in·lb	S
9	Variable Differential Control Lever Bolt	–	–	–	L

AD: Apply adhesive agent.
AG: Apply grease (Amoco rykon premium grease No. 2 EP Green).
G: Apply grease.
L: Apply a non-permanent locking agent.
R: Replacement Parts
S: Follow the specific tightening sequence.

Specifications

Item	Standard	Service Limit
Tie-rods		
Tie-rod Length	393.3 mm (15.48 in.)	– – –

Special Tools

Inside Circlip Pliers:
57001-143

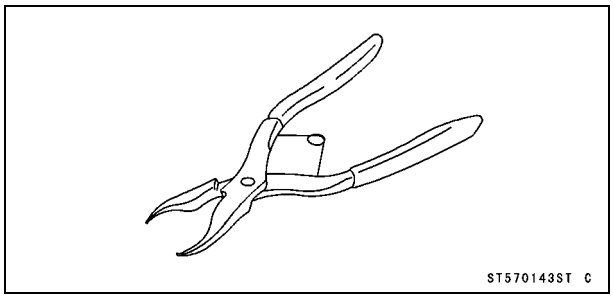

Bearing Driver Set:
57001-1129

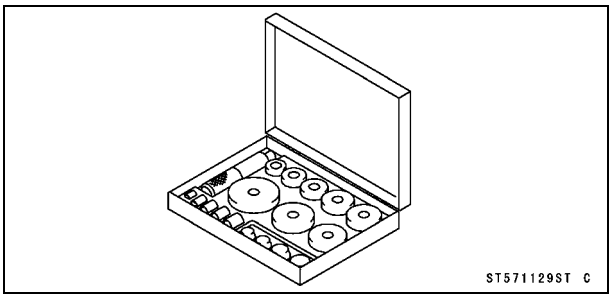

Steering

Steering Stem Removal

- Remove:
  Front Fender (see Front Fender Removal in the Frame chapter)
  Handlebar (see Handlebar Removal)
  Cotter Pins and Tie-rod End Nuts [A]
  Steering Stem Bearing Joint Bolts [B] (right and left)

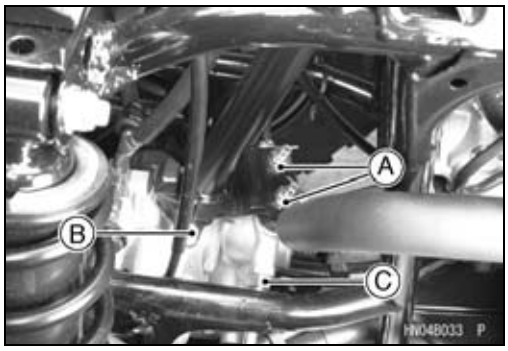

CAUTION
Do not loosen the locknuts [C] at the ends of the tie-rod adjusting sleeve, or the toe-in of the front wheels will be changed.

- Flatten out the bended washer [A].
- Remove:
  Steering Clamp Bolts [B]
  Steering Clamps [C]
  Grease Seals

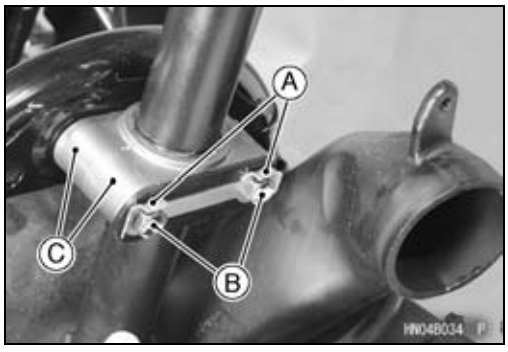

- Cut the band [A] and pull the steering stem [B] out of the frame.

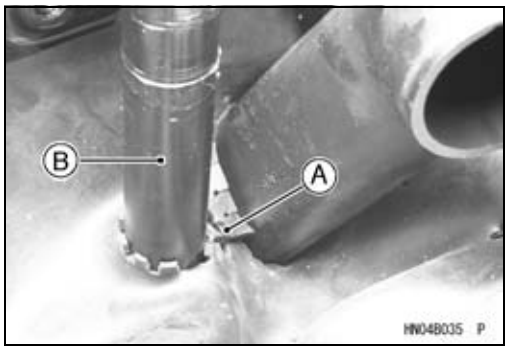

- Remove:
  Cotter Pin [A]
  Steering Stem Bottom End Nut [B]
  Collar [C]
  Steering Stem Bearing [D]

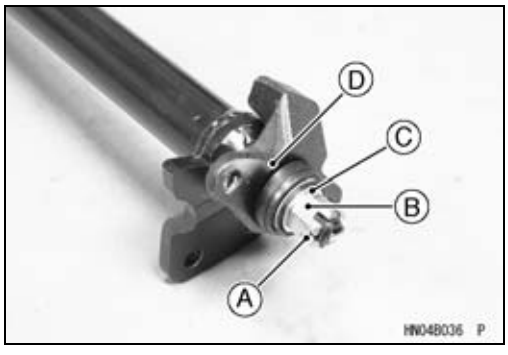

Steering

Steering Stem Installation

- Fill grease up the seal grooves [A] in the steering stem bearing.
- Install:
  Collar
- Tighten:

  Torque - Steering Stem Bottom End Nut: 62 N·m (6.3 kgf·m, 46 ft·lb)
- Bend both ends of the cotter pin.

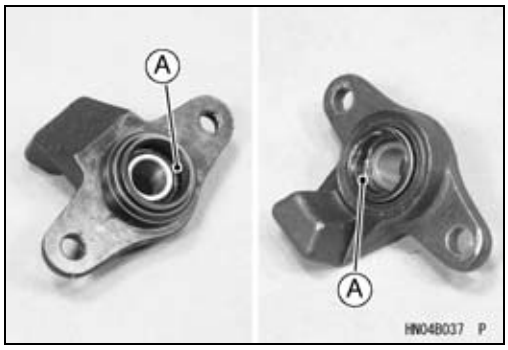

- Apply a non-permanent locking agent:
  Steering Stem Bearing Joint Bolts [A]
- Tighten:

  Torque - Steering Stem Bearing Joint Bolts: 23 N·m (2.3 kgf·m, 17 ft·lb)

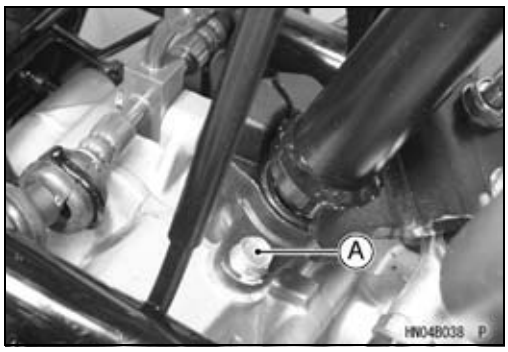

- Apply Amoco Rykon Premium Grease No.2 EP (Green):
  Inside of Steering Clamp [A]
  Grease Seals [B]

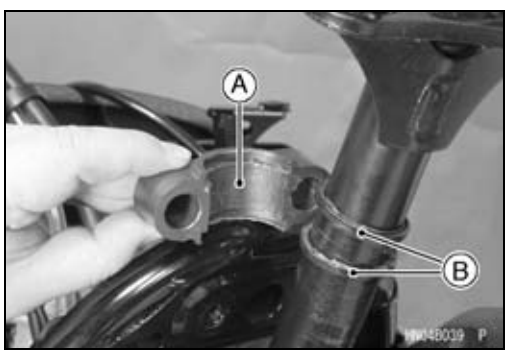

- Install:
  Collars [A]
- Apply above grease to the inside of steering clamp [B].

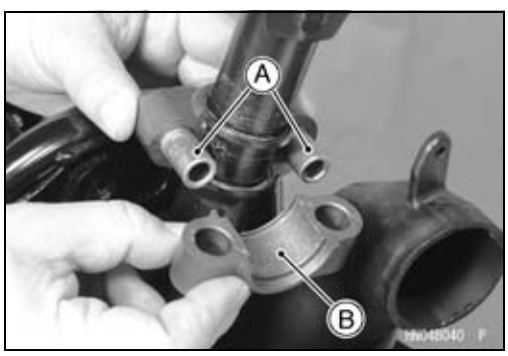

- Tighten:

  Torque - Steering Stem Clamp Bolts [A]: 25 N·m (2.5 kgf·m, 18 ft·lb)
  Tie-rod End Nuts: 42 N·m (4.3 kgf·m, 31 ft·lb)
- Bend the tabs of the washer [B] toward the bolt head.
- Inspect the toe-in (see Toe-in Inspection in the Wheels/Tires chapter).

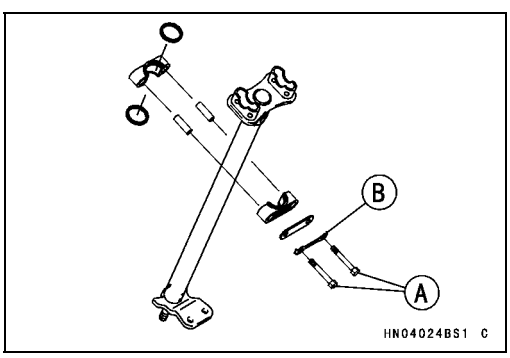

Steering

Steering Knuckle Removal

- Remove:
  Front Wheel and Hub (see Wheel and Front Hub Removal in the Wheel/Tiers chapter)
  Front Brake Caliper (see Front Brake Caliper Removal in the Brakes chapter)
  Cotter Pin [A]

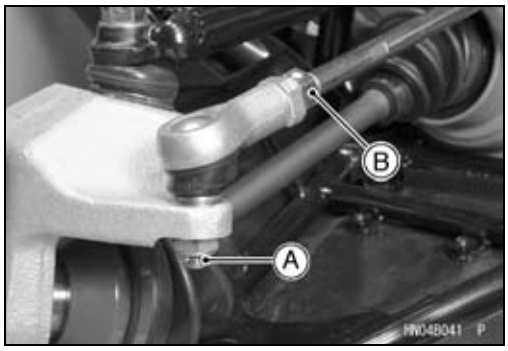

CAUTION

Do not loosen the locknuts [B] at the ends of the tie-rod, or the toe-in of the front wheels will be changed.

- Hold the flat surfaces [A] of the tie-rod end with a thin wrench [B], and remove the tie-rod end nut [C] and washers.
- Tap the tie-rod end shaft lightly and remove the tie-rod end from the knuckle.

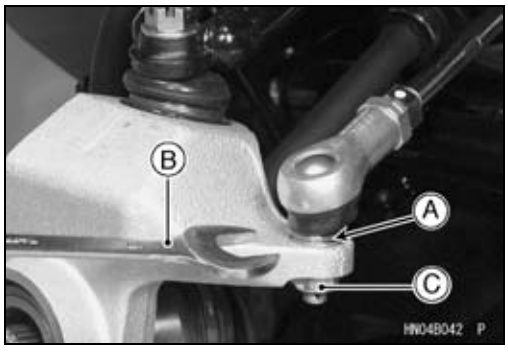

- Remove:
  Cotter Pins and Steering Knuckle Joint Nuts [A]

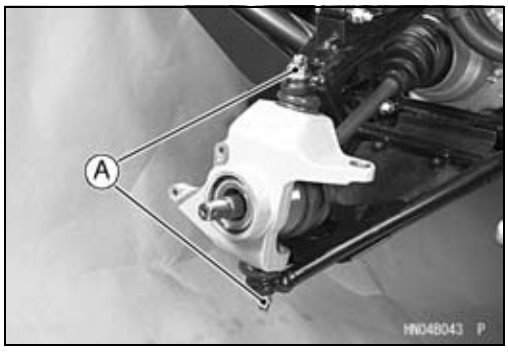

- Install a suitable nut [A] (M12) to the knuckle joint end temporary as shown.
- Tap [B] the knuckle joint end and remove the joint from the front suspension arm [C].

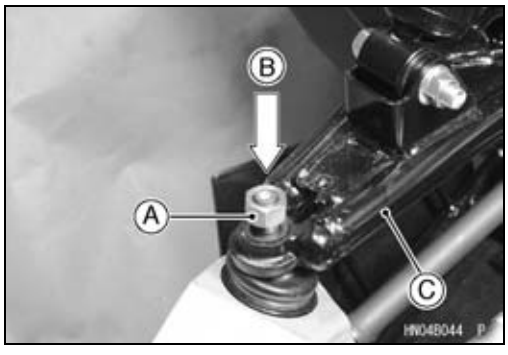

Steering

- Install a suitable nut [A] (M12) to the knuckle joint end temporary.
- Tap the knuckle joint end and remove the knuckle [B].

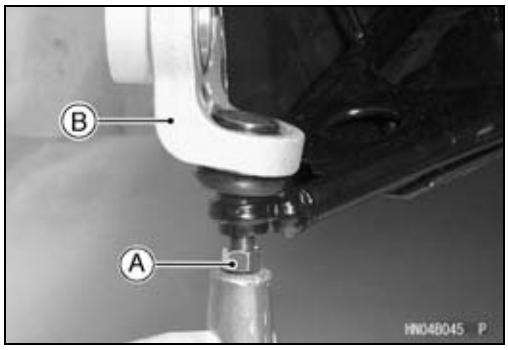

Steering Knuckle Installation

- Inspect the spherical bearings in the knuckle joints [A].

★If roughness, excessive play, or seizure is found, replace the knuckle joint.

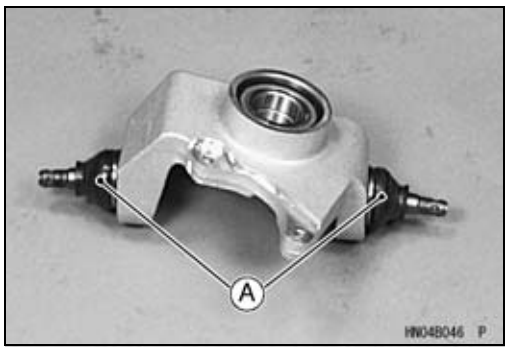

- Check the joint boot [A] is not torn, worn, deteriorated, or is leaking grease.

★If it is found, replace the knuckle joint.

- Clean the shanks [B] of the knuckle joint.

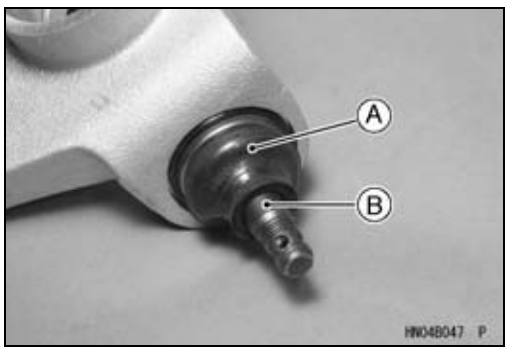

- Clean the taper surface [A] in the front suspension arm [B].

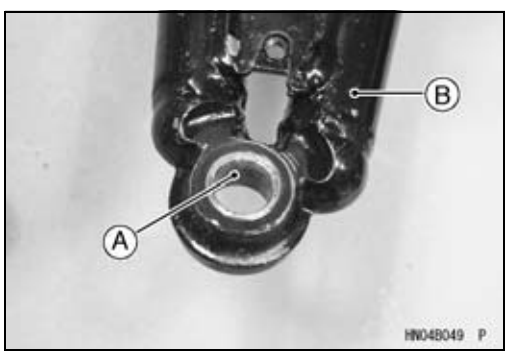

- Install:
  Washers [A] and Knuckle Joint Nuts [B]
- Tighten:

Torque - Steering Knuckle Joint Nuts: 29 N·m (3.0 kgf·m, 22 ft·lb)
Tie-rod End Nuts: 42 Nm (4.3 kgfm, 31 ftlb)

- Install the new cotter pins [C] and bend its both ends.

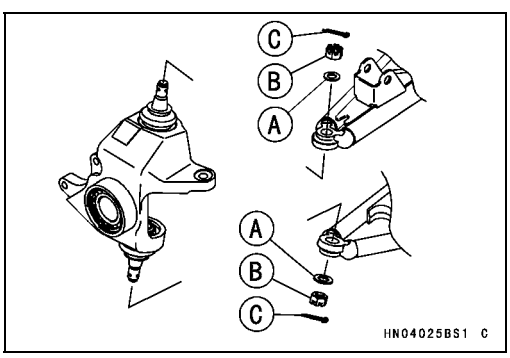

Steering

Steering Knuckle Bearing Removal

- Remove:
  Steering Knuckle (see Steering Knuckle Removal)
  Circlip [A]

  Special Tool - Inside Circlip Pliers [B]: 57001-143

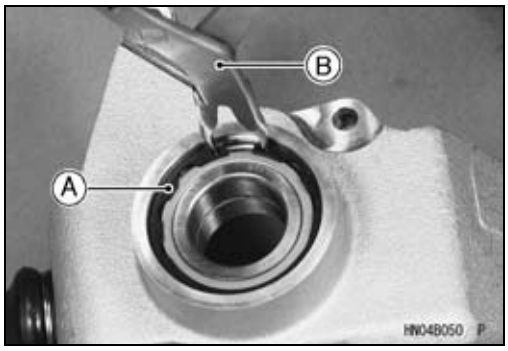

- Drive the bearing [A] out using a suitable bearing driver from the bearing driver set.

  Special Tool - Bearing Driver Set: 57001-1129

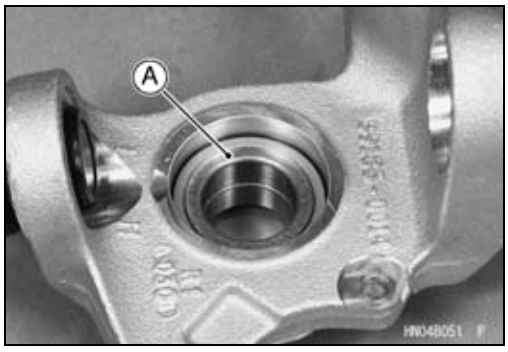

Steering Knuckle Bearing Installation

- The marked side of the bearing faces outward.
- Press in the bearing until it is bottomed.
  [A] V Block

  Special Tool - Bearing Driver Set [B]: 57001-1129
- Replace the circlip with a new one.

  Special Tool - Inside Circlip Pliers: 57001-143

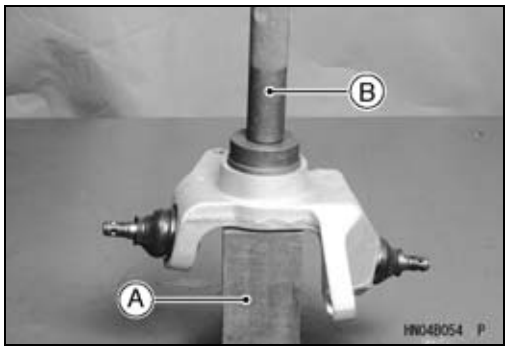

Tie-rod Removal

- Remove:
  Front Wheels (see Wheel Removal in the Wheels/Tires chapter)
  Cotter Pin and Tie-rod End Nuts [A]
  Tie-rod [B]

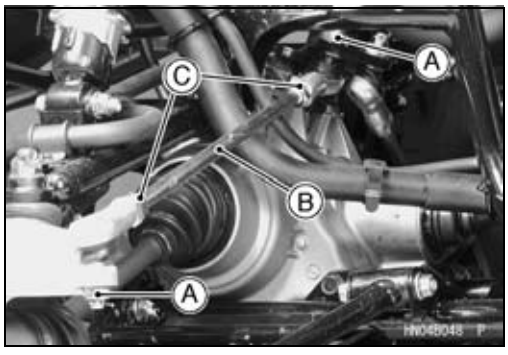

CAUTION
When removing the tie-rod, be careful not to bend it. Do not loosen the locknuts [C] at the end of the tie-rod adjusting sleeve, or the toe-in of the front wheels will be changed.

Tie-rod Installation

- The right and left tie-rods are identical.
- Tighten:

  Torque - Tie-rod End Nuts: 42 N·m (4.3 kgf·m, 31 ft·lb)
- Inspect the toe-in (see Toe-in Inspection in the Wheels/Tires chapter).

Steering

Tie-rod End Removal

- Remove the tie-rod (see Tie-rod Removal).
- Holding the tie-rod flattened area [A], loosen the locknut [B] and unscrew the tie-rod end [C].

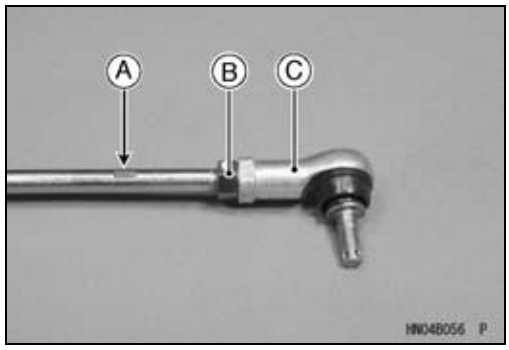

NOTE

○*The locknut near the L mark on the tie-rod has left-hand threads. Turn the wrench clockwise for loosening.*

CAUTION
Do not remove the grease seal. It is packed with grease.

Tie-rod End Installation

- Check that the boot lip [A] is on the shank [B].

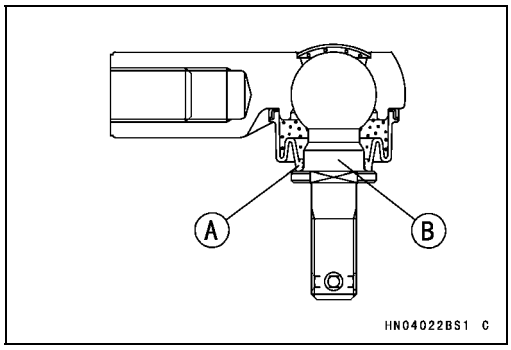

- Install the tie-rod ends so that the tie-rod has the correct length [A], and both visible thread lengths [B] are equal.

  Tie-rod Length
  Standard: 388.5 mm (15.30 in.)

- Tighten:

  Torque - Tie-rod Locknuts: 37 N·m (3.8 kgf·m, 27 ft·lb)

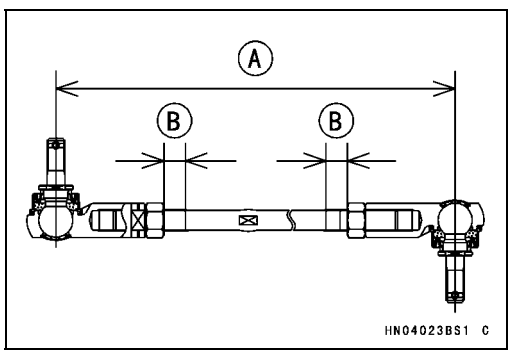

Steering Maintenance

Steering Inspection

- Refer to the Steering Inspection in the Periodic Maintenance chapter.

Steering Stem Straightness Inspection

- Remove the steering stem (see Steering Stem Removal).
- Check the steering stem for straightness.

○Use a straightedge along the stem.

★If the steering stem is bent, replace the steering stem.

Steering Bearing Sleeve Lubrication

- Lubricate the steering stem bearings.

○Remove the steering stem (see Steering Stem Removal).

○Wipe all the old grease off the steering stem, bearing sleeves, and out of the grease seals.

○Apply Amoco Rykon Premium Grease No. 2 EP (Green) to the steering stem [A] and the inside [B] of the both clamps.

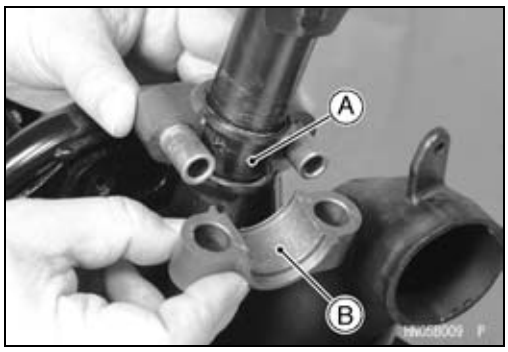

- Lubricate the steering stem bearing [A].

○Remove the steering stem bearing.

○Pack the grease seal lips with grease.

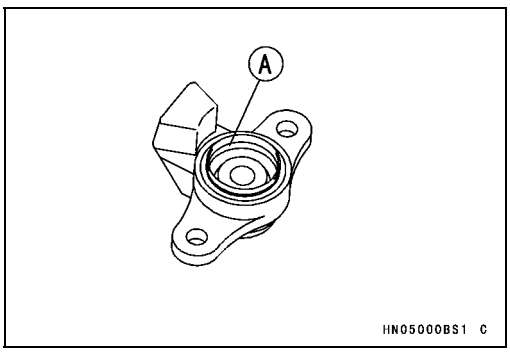

Steering Stem Clamp Inspection

- Inspect the steering stem clamps [A].

★If roughness, excessive play, or seizure is found, replace both clamps.

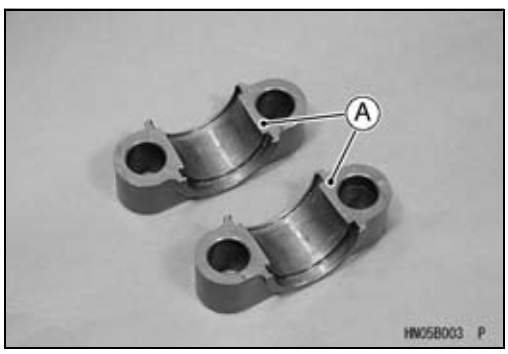

Steering Stem Bearing Inspection

- Inspect the spherical bearing [A].

★If roughness, excessive play, or seizure is found, replace the steering stem bearing.

- Inspect the upper and lower grease seals [B].

★If damage, wear or deterioration is found, replace the steering stem bearing.

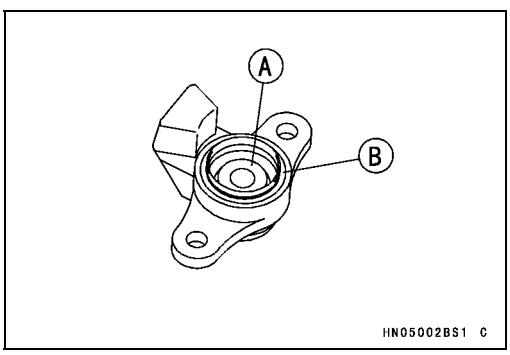

Steering Maintenance

Steering Knuckle Bearing Inspection

CAUTION
Do not remove any bearings for inspection.

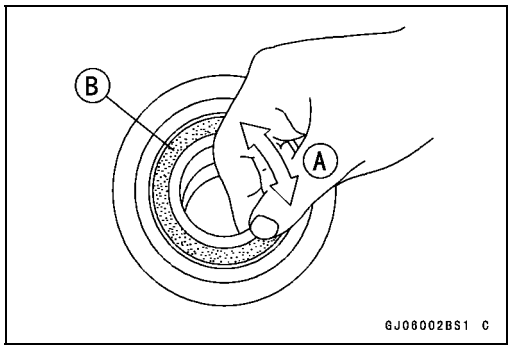

- Remove the steering knuckle (see Steering Knuckle Removal).
- Turn [A] the bearing back and forth while checking for roughness or binding.

★If roughness or binding is found, replace the bearing.

- Examine the bearing seal [B] for tears or leakage.

★If the seal is torn or is leaking, replace the bearing.

Tie-rod End Inspection

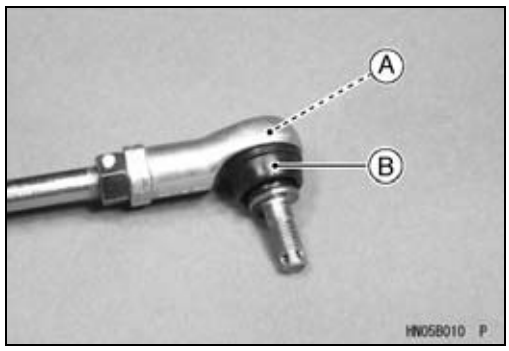

- Inspect each spherical bearing [A].

★If roughness, excessive play, or seizure is found, replace the tie-rod end.

- Inspect each boot [B].

★If damage, wear or deterioration is found, replace the tie-rod end.

Steering Knuckle Joint Inspection

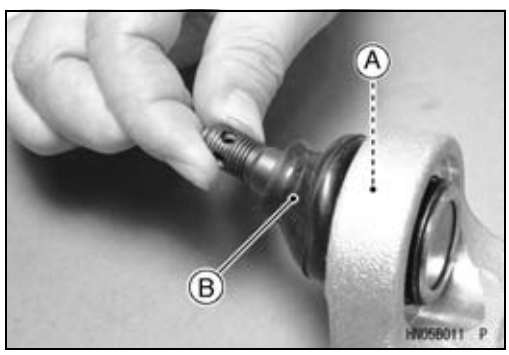

- Inspect each spherical bearing [A].

★If roughness, excessive play, or seizure is found, replace the steering knuckle joint.

- Inspect each boot [B].

★If damage, wear or deterioration is found, replace the steering knuckle joint.

Handlebar

Handlebar Removal

- Remove:
  Multifunction Meter Unit (see Multifunction Meter Unit Removal in the Electrical System chapter)
  Throttle Case
  Front Brake Master Cylinder
  Left-hand Switch Housing
  Rear Brake Lever Assembly
  Handlebar Holder Bolts [A] and Bracket [B]
  Handlebar Holders [C]
  Handlebar [D]

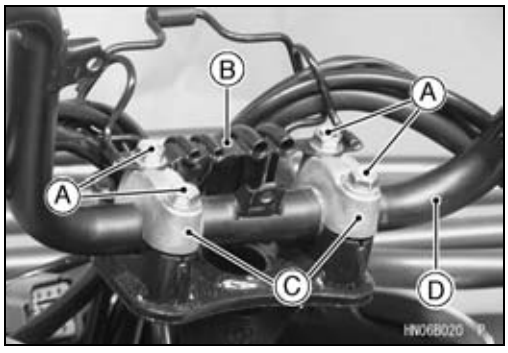

Handlebar Installation

- Align the punch mark [A] on the handlebar with the mating surface end [B] of the steering stem.

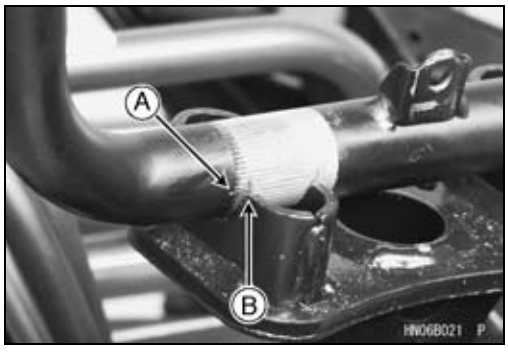

- Install the bracket [A].
- Tighten the holder front bolts [B] first and then the rear bolts [C].

Torque - Handlebar Holder Bolts: 29 N·m (3.0 kgf·m, 22 ft·lb)

○If the holder is correctly installed, there will be no gap [D] at the front and an even gap [E] at the rear after tightening.

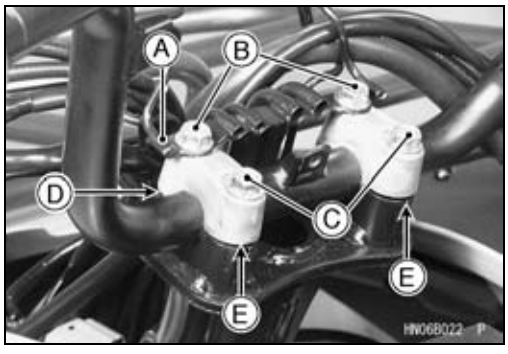

- Install:
  Right Switch Housing (Throttle Case) [A]
  Front Brake Lever (Master Cylinder) [B]
  Punch Mark [C]
  [D] = 70 mm (2.76 in.)

Torque - Front Brake Master Cylinder Clamp Bolts: 9.0 N·m (0.92 kgf·m, 80 in·lb)

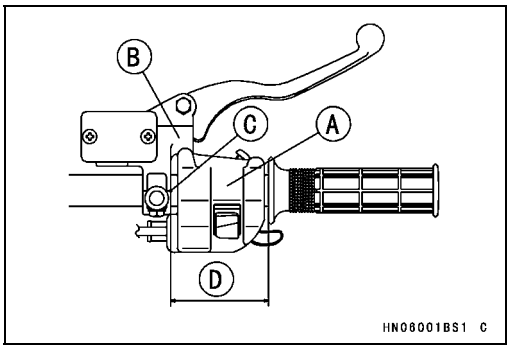

- Install the left switch housing [C] on the handlebar [B] so that the opening angle is 40° [A] or less.

NOTE

○*Do not open the housing more than 40°, the built-in parts in the housing may be damaged.*

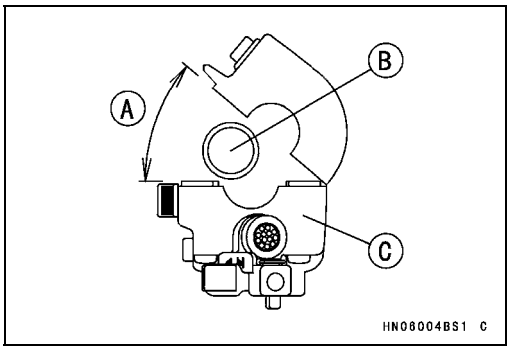

Handlebar

- Install:
  Left Switch Housing [A]
  Rear Brake Lever Assembly [B]
  Punch Mark [C]
  [D] = 6 mm (0.24 in.)

○Apply a non-permanent locking agent to the thread of the variable differential control lever bolt, and tighten it securely.

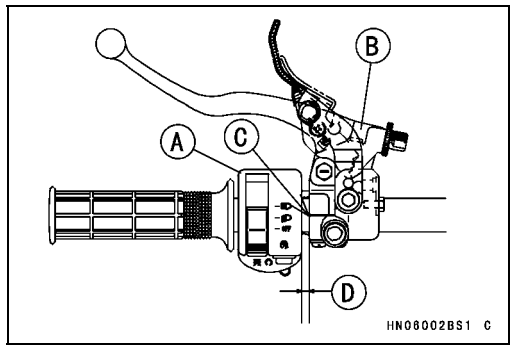

Frame

Table of Contents

Exploded View

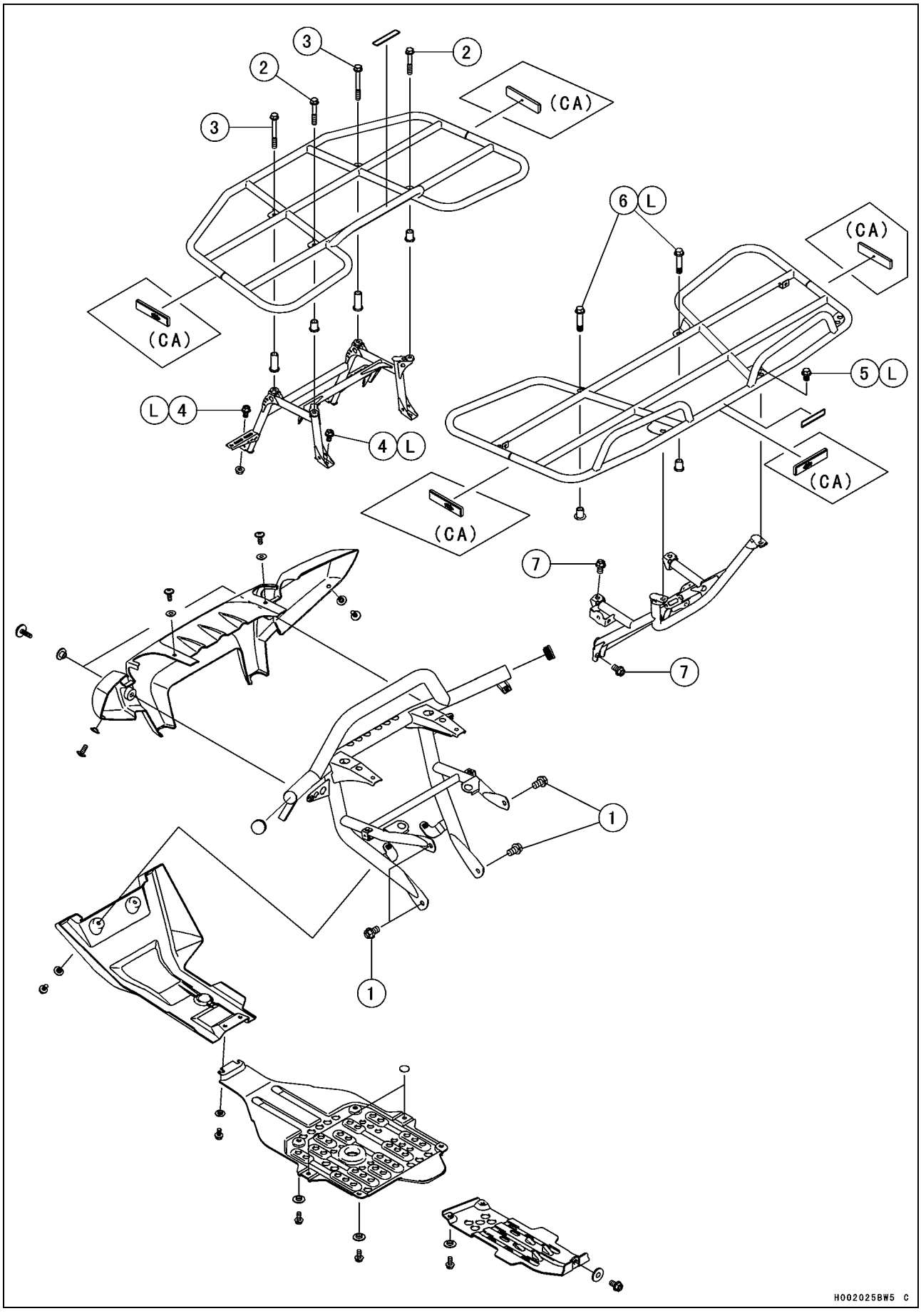

Exploded View

No.	Fastener	Torque			Remarks
		N·m	kgf·m	ft·lb	
1	Front Guard Bolts	37	3.8	27	
2	Front Carrier Bolts, L = 50 mm (2.0 in.)	25	2.5	18	
3	Front Carrier Bolts, L = 70 mm (2.8 in.)	25	2.5	18	
4	Front Carrier Bracket Bolts	32	3.3	24	L
5	Rear Carrier Bolts, L = 14 mm (0.6 in.)	54	5.5	40	L
6	Rear Carrier Bolts, L = 41 mm (1.6 in.)	54	5.5	40	L
7	Rear Carrier Bracket Bolts	47	4.8	35	

CA: Canada Model

Exploded View

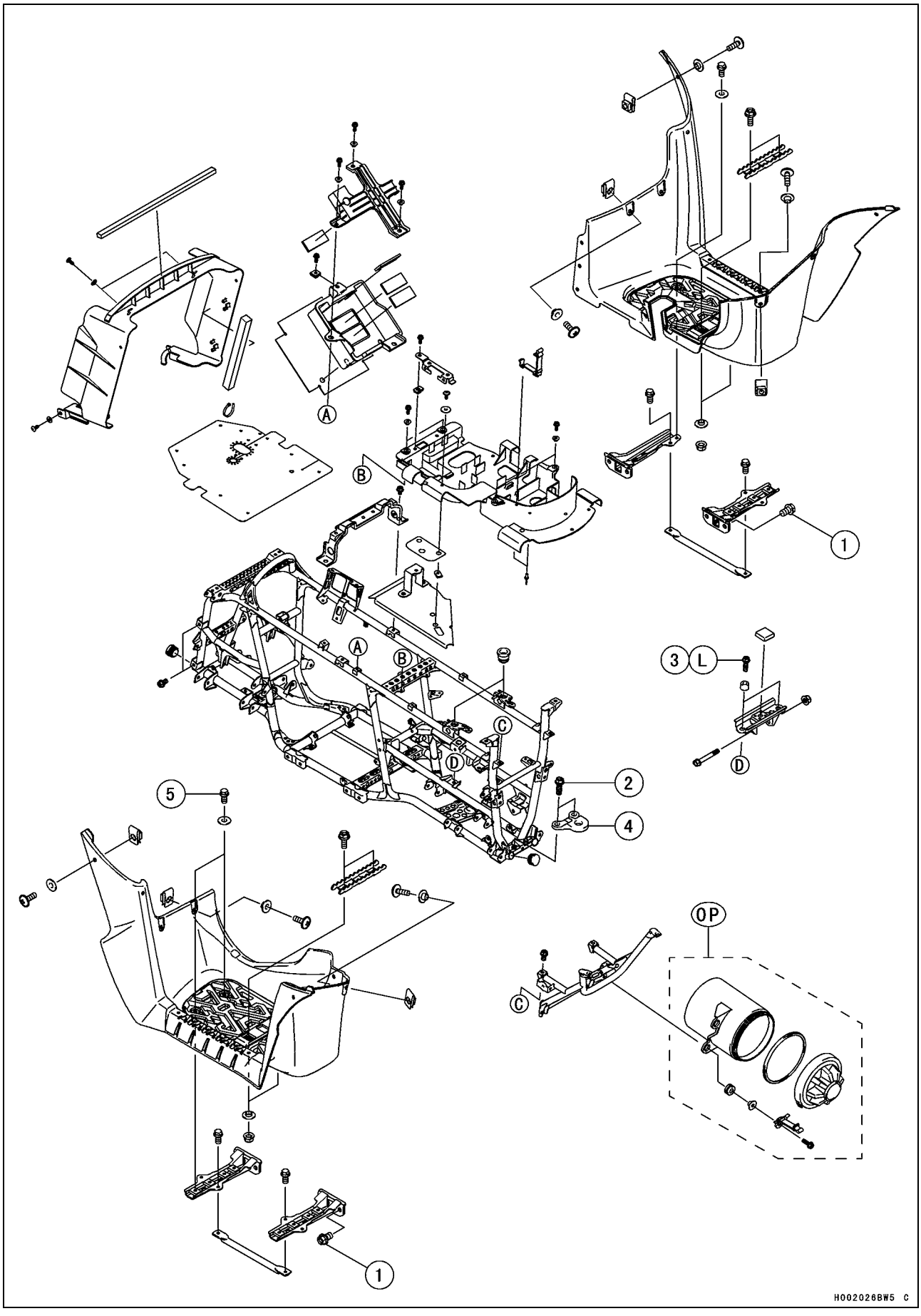

Exploded View

No.	Fastener	Torque			Remarks
		N·m	kgf·m	ft·lb	
1	Footboard Bracket Bolts	47	4.8	35	
2	Hitch Bracket Bolts	82	8.3	60	
3	Rear Final Gear Case Mounting Bracket Bolts	–	–	–	L

4. Trailer Hitch Bracket
5. Footboard Mounting Bolts

L: Apply a non-permanent locking agent.
OP: Optional Parts

Exploded View

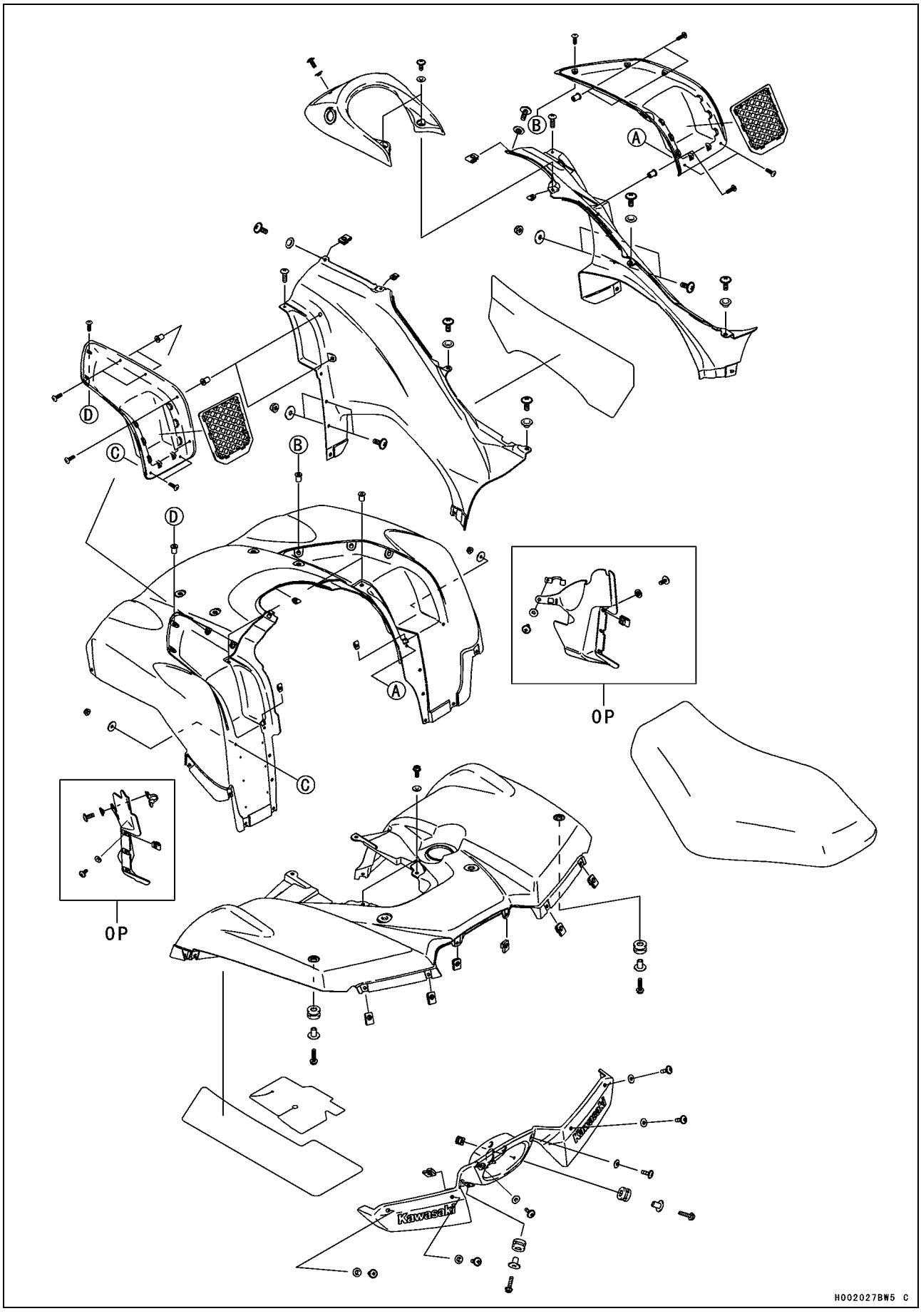

Exploded View

OP: Optional Parts

Seat

Seat Removal

- Remove the seat [A] by lifting the latch lever [B] and then pulling the seat up to the rear.

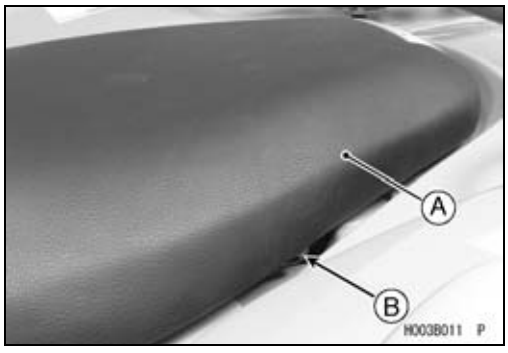

Seat Installation

- Insert the front seat hooks [A] into the receivers [B] in the bracket.

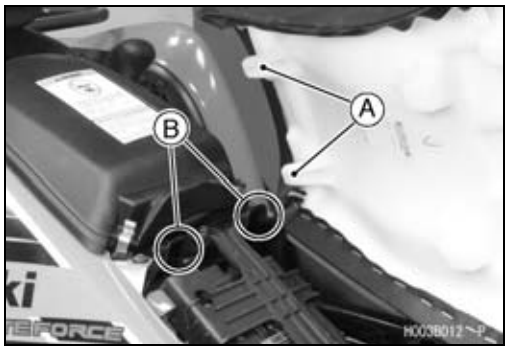

- Insert the rear seat hooks [A] into the dampers [B].
- Push the rear part of the seat down to engage the latches [C].

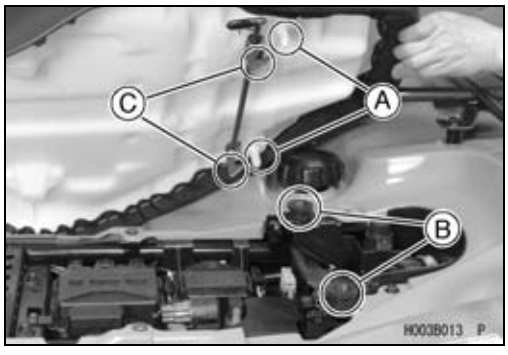

Carriers

Front Carrier Removal

- Remove:
  Front Carrier Bolts [A]
  Collars
  Front Carrier [B]

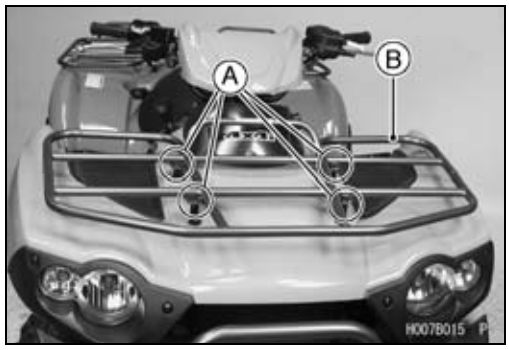

Front Carrier Installation

- Install:
  Long Collars, L = 44.6 mm (1.8 in.) [A]
  Short Collars, L = 21.6 mm (0.9 in.) [B]
  Front Carrier [C]
- Tighten:

Torque - Front Carrier Bolts [D], L = 70 mm (2.8 in.):25 N·m (2.5 kgf·m, 18 ft·lb)
Front Carrier Bolts [E], L = 50 mm (2.0 in.):25 N·m (2.5 kgf·m, 18 ft·lb)

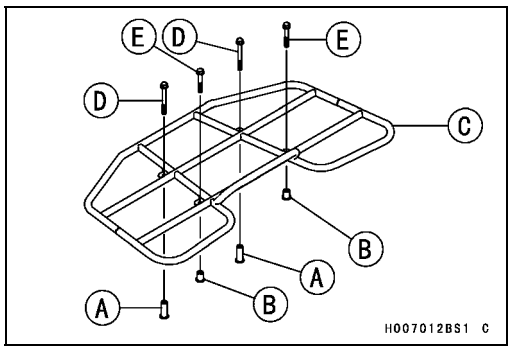

Front Carrier Bracket Installation

- Install:
  Front Carrier Bracket [A]
- Apply a non-permanent locking agent on the thread of the front carrier bracket bolts and tighten them with a specified torque.

Torque - Front Carrier Bracket Bolts [B]: 32 N·m (3.3 kgf·m, 24 ft·lb)

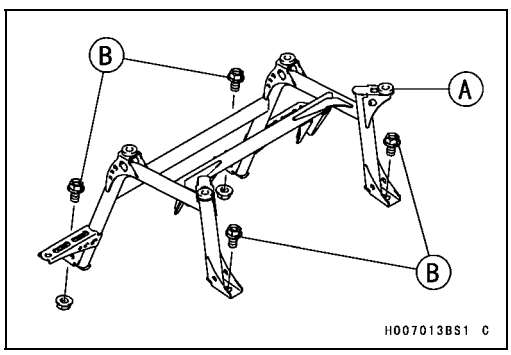

Rear Carrier Removal

- Remove:
  Rear Carrier Bolts [A]
  Collars [B]
  Rear Carrier [C]

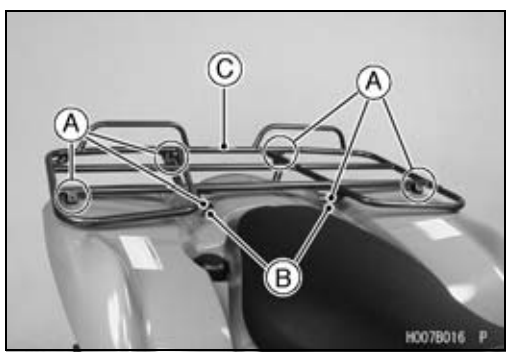

Rear Carrier Installation

- Install:
  Collar [A]
  Rear Carrier [B]
  Rear Carrier Bolts, L = 41 mm (1.61 in.) [C]
  Rear Carrier Bolts, L = 14 mm (0.55 in.) [D]
  Rear Carrier Bolts, L = 25 mm (0.98 in.) [E]
- Apply a non-permanent locking agent on the thread of the Rear Carrier bolts [C], [D] and tighten them with a specified torque.

Torque - Rear Carrier Bolts [C] [D]: 54 N·m (5.5 kgf·m, 40 ft·lb)

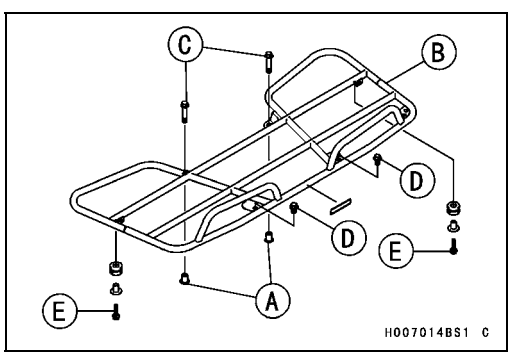

Carriers

Rear Carrier Bracket Installation

- Install:
  Rear Carrier Bracket [A]
- Tighten:

Torque - Rear Carrier Bracket Bolts [B]: 47 N·m (4.8 kgf·m, 35 ft·lb)

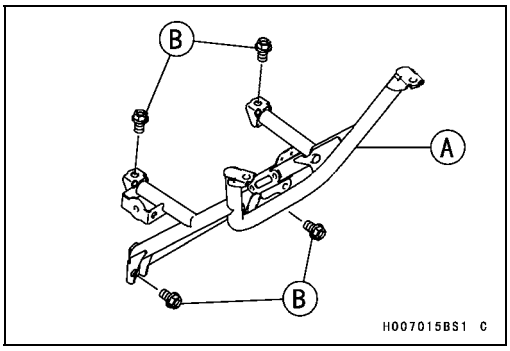

Fenders

Front Fender Removal

- Remove:
  Seat (see Seat Removal)
  Front Carrier (see Front Carrier Removal)
  Left and Right Side Covers (see each Side Cover Removal)
  Middle Cover
  Quick Rivets [A] (both sides)
  Bolts [B]

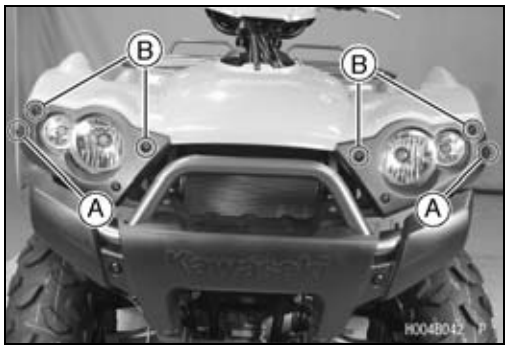

- Remove:
  Screws [A] and Collars

- Remove:
  Screws [A] and Collars
  Front Fender [B]

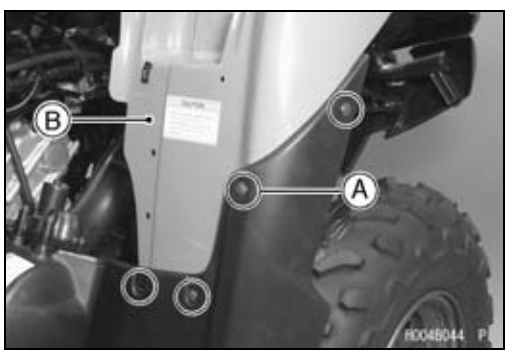

Front Fender Installation

- Install:
  Screws and Collars
  Quick Rivets
- Install:
  Front Carrier (see Front Carrier Installation)

Rear Fender Removal

- Disconnect:
  Tail/Brake Light Lead Connector [A]
  Bolts [A] and Collars

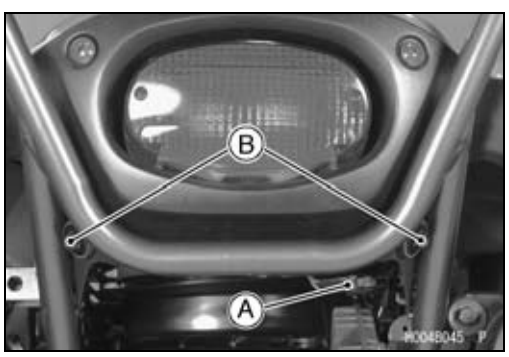

Fenders

- Remove:
  Seat (see Seat Removal)
  Rear Carrier (see Rear Carrier Removal)
  Screws [A] and Collars

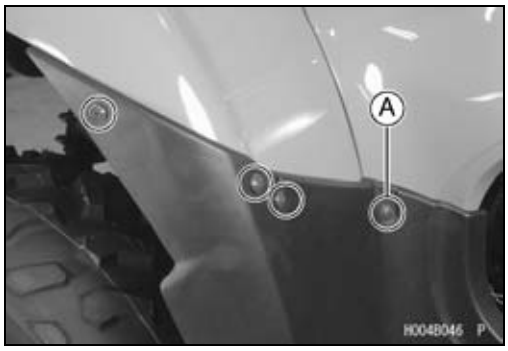

- Remove:
  Screws [A] and Collars

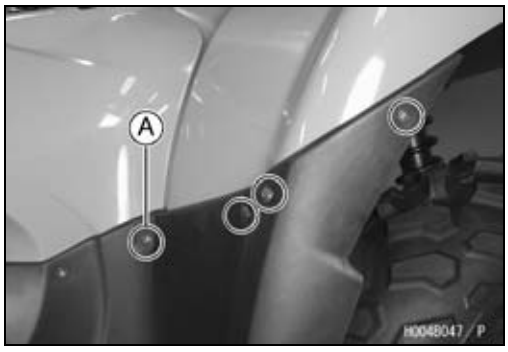

- Remove:
  Screws [A] and Collars
  Bolts [B] and Collars
  Fuel Tank Cap [C]
  Rear Fender [D]
- Install the fuel tank cap after removing the rear fender.

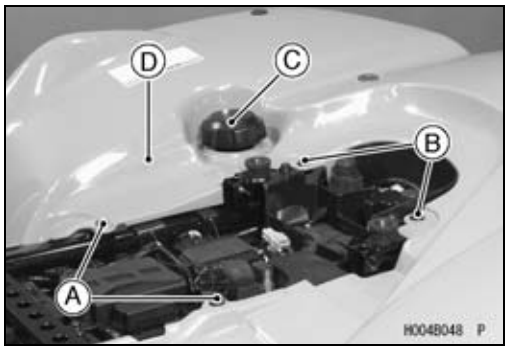

Rear Fender Installation

- Connect:
  Tail/Brake Light Lead Connector
- Install:
  Rear Fender
  Dampers [A] and Collars [B]
  Rear Carrier (see Rear Carrier Installation)

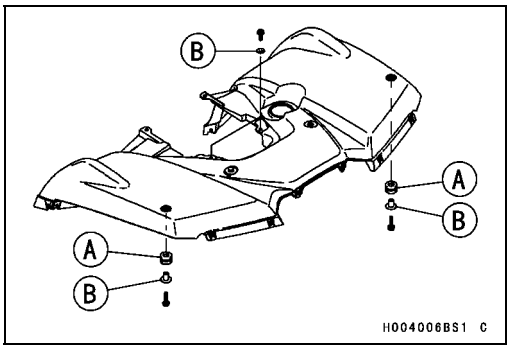

Covers

Middle Cover Removal

- Remove:
  Middle Cover Screws [A] and Collars

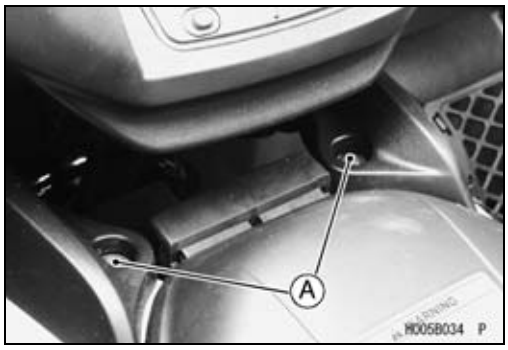

- Remove:
  Middle Cover Screw [A] and Collar

- Disconnect:
  Power Outlet Lead Connectors [A]

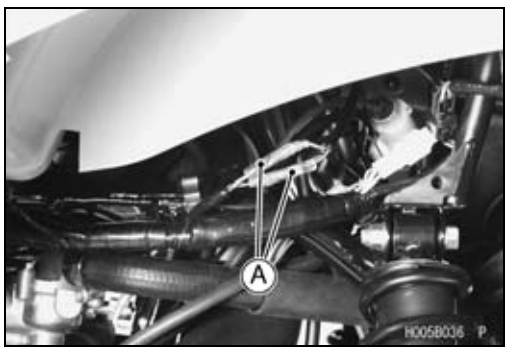

- Remove the middle cover [A] as shown.

Middle Cover Installation

- Connect:
  Power Outlet Lead Connectors
- Install:
  Middle Cover [A]
  Middle Cover Screws [B] and Collars [C]

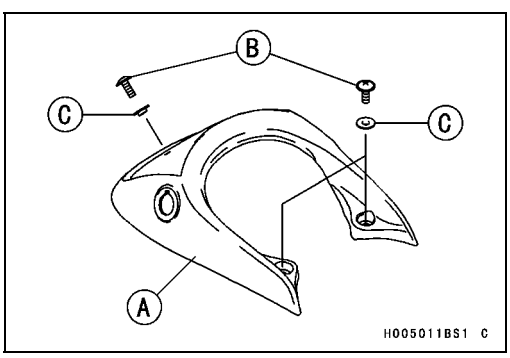

Covers

Left Side Cover Removal

- Remove:
  Seat (see Seat Removal)
  Middle Cover Screws
  Storage Case Screws [A]
  Storage Case [B]

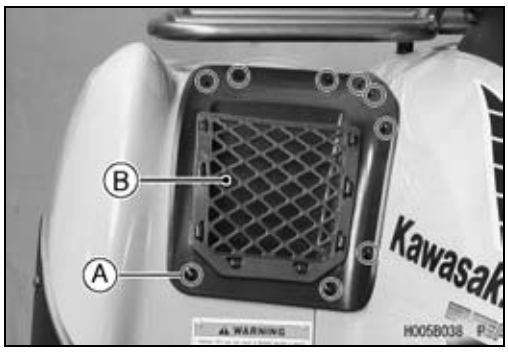

- Remove:
  Screws [A] and Collars

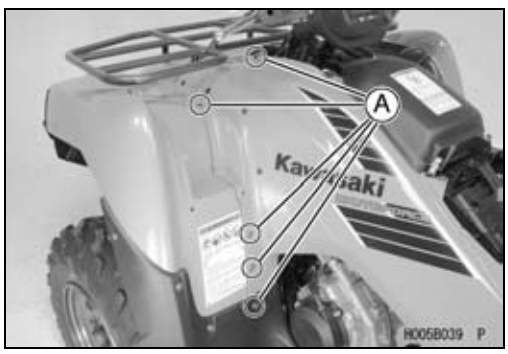

- Remove:
  Screws [A] and Collars
  Left Side Cover [B]

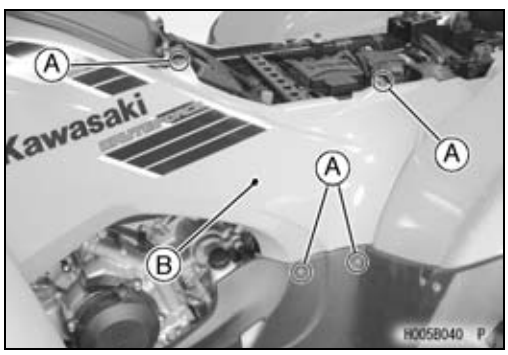

Left Side Cover Installation

- Install:
  Left Side Cover [A]
  Insulator [B]
  Screws [C] and Collars [D]
  Washers [E]
  Storage Case

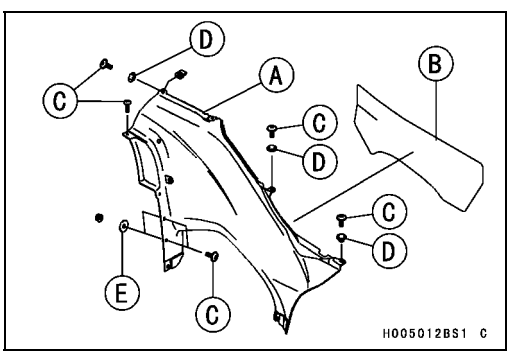

Right Side Cover Removal

- Remove:
  Seat (see Seat Removal)
  Middle Cover Screws
  Ignition Switch Nut [A]
  Storage Case Screws [B]
  Storage Case [C]

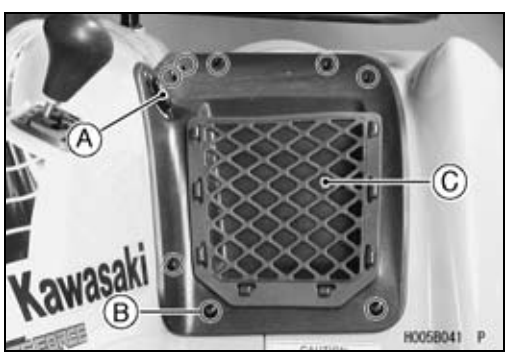

Covers

- Remove:
  Shift Knob [A]
  Screws [B] and Collars

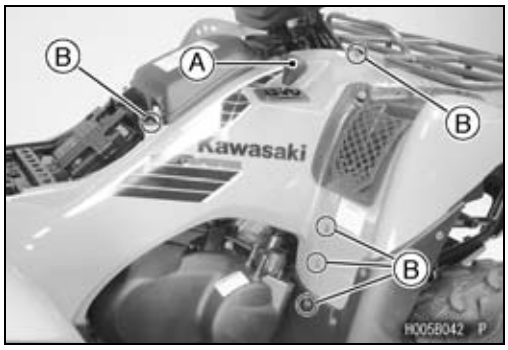

- Remove:
  Screws [A] and Collars
  Right Side Cover [B]

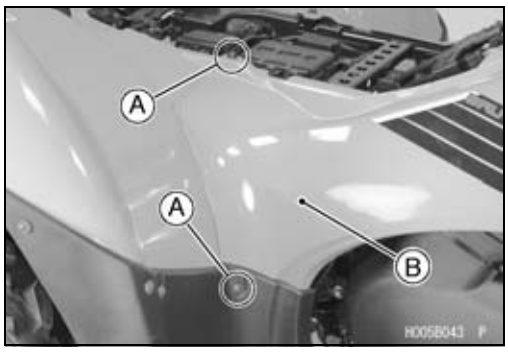

Right Side Cover Installation

- Install:
  Right Side Cover [A]
  Screws [B] and Collars [C]
  Washer [D]

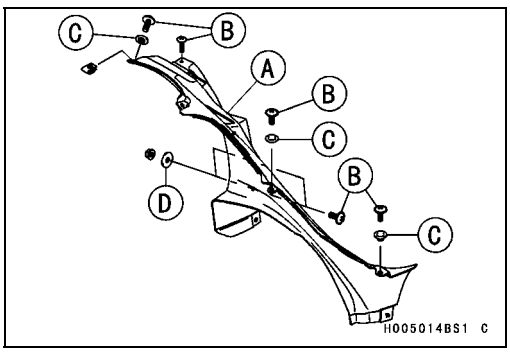

- Install:
  Storage Case
- Fit the projection [A] on the ignition switch into the recess in the storage case.
- Tighten the nut [B] securely.

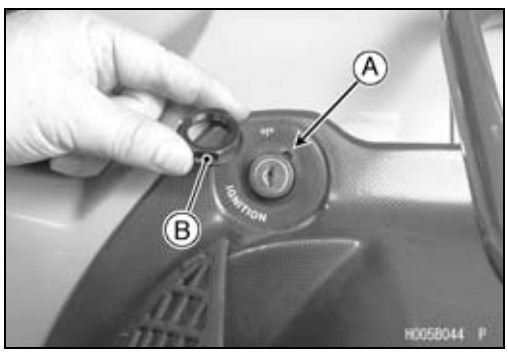

Electrical Parts Case Removal

- Remove:
  Seat (see Seat Removal)
  Rear Fender (see Rear Fender Removal)
  Fuse Box [A]
  Vehicle-down Sensor Lead Connector [B] (disconnect)
- Remove the following parts from the case.
  Starter Circuit Relays [C]
  Radiator Fan Breaker [D]
  Starter Relay [E]
  Reset Connector [F]
  Actuator Controller [G]
  Igniter [H]

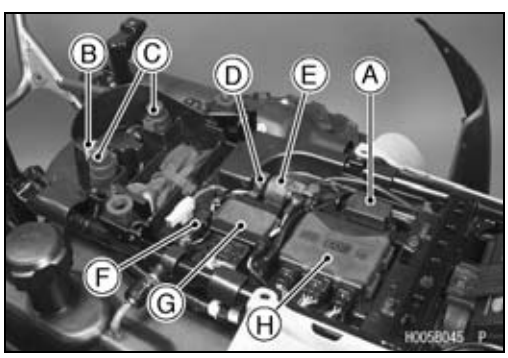

Covers

- Remove:
  Screw [A]
  Bolts [B]
  Electrical Parts Case [C]

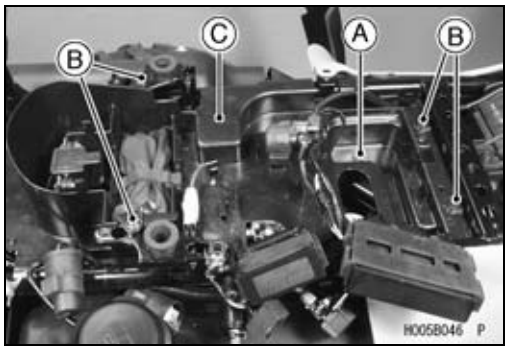

Electrical Parts Case Installation

- Install:
  Removed Parts
- Connect the vehicle-down sensor lead connector.
- Route the electrical parts leads according to the Appendix chapter.

Radiator Cover Removal

- Remove:
  Front Fender (see Front Fender Removal)
  Clamps [A] (both sides)
  Radiator Cover Screws [B] and collars

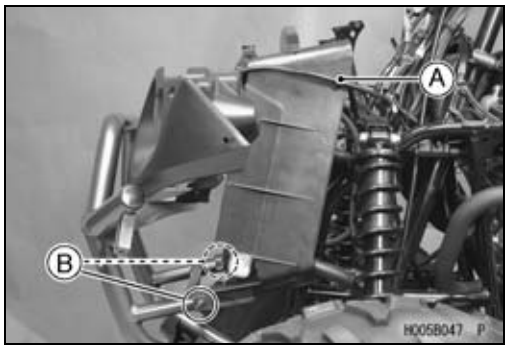

- Remove:
  Radiator Cover Screws [A] and Collars
  Radiator Cover [B]

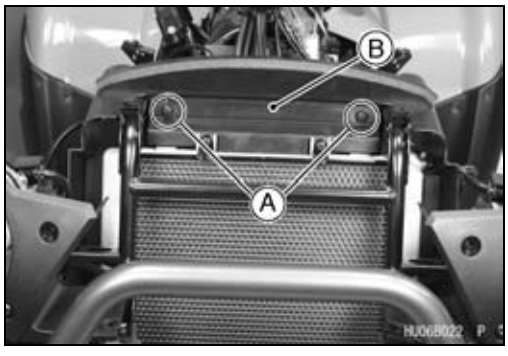

Radiator Cover Installation

- Set the corner line [A] and bottom line [B] of the radiator cover.
- Install:
  Radiator Cover Screws and Collars

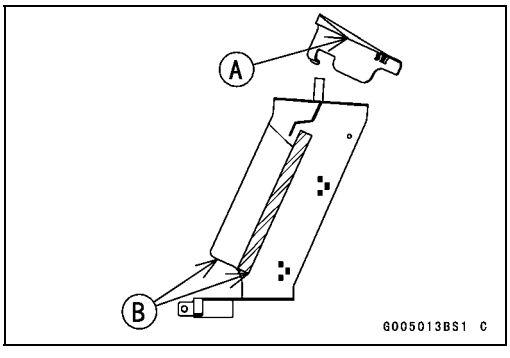

Guards

Front Guard Removal

- Remove:
  Screws [A] and Collars
  Bolts [B] and Collars
  Front Guard Cover [C]
  Bolts [D] and Collars

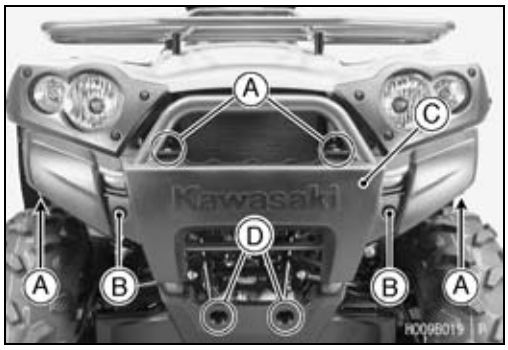

- Remove:
  Front Carrier Bracket Bolts [A]
  Radiator Cover Screws [E] and Collars
  Front Guard Bolts [C] (both sides)
- Remove the front guard [D] from the radiator bottom stoppers [B].

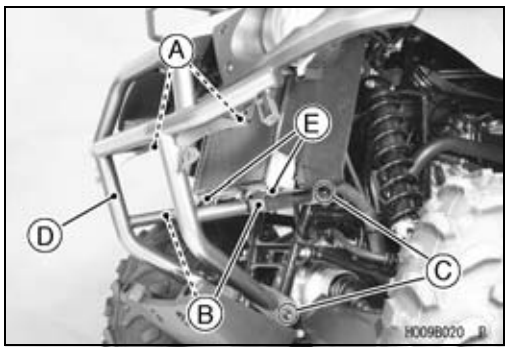

Front Guard Installation

- Insert the radiator bottom stoppers in the grommet in the front guard.
- Install:
  Front Guard [A]
  Front Guard Bolts [B]
- Tighten:

  Torque - Front Guard Bolts: 37 N·m (3.8 kgf·m, 27 ft·lb)
  Front Carrier Bracket Bolts: 32 N·m (3.3 kgf·m, 24 ft·lb)

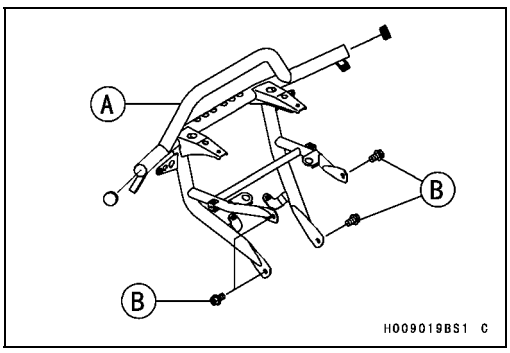

- Install:
  Radiator Cover Screws
  Front Guard Cover [A]
  Screws [B] and Collars [C]
  Bolts [D] and Collars [E]

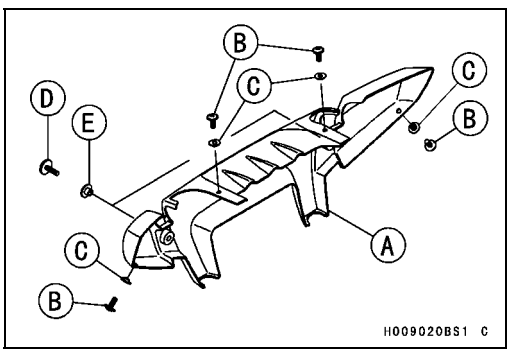

Front Bottom Guard Removal

- Remove:
  Bolts [A] and Collars
  Front Bottom Guard [B]

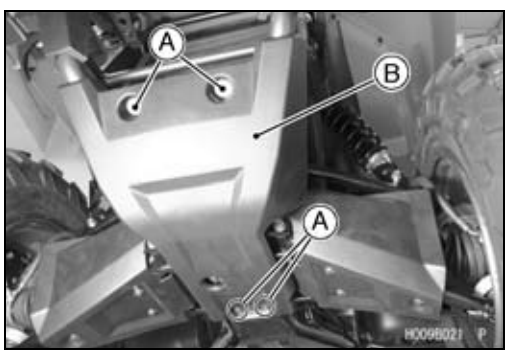

Guards

Front Bottom Guard Installation

- Install the front bottom guard [A] between the frame and engine bottom guard [B].
- Install:
  Bolts [C] and Collars [D]

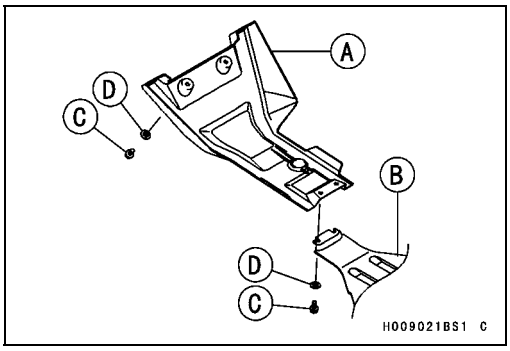

Engine Bottom Guard Removal

- Remove:
  Bolts [A] and Collars [B]
  Engine Bottom Guard [C]

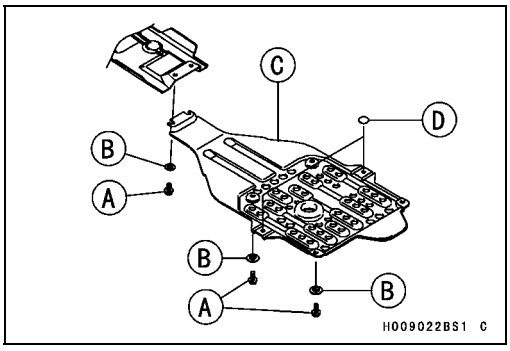

Engine Bottom Guard Installation

- Confirm:
  Damper [D]
- Install:
  Engine Bottom Guard
  Bolts and Collars

Rear Bottom Guard Removal

- Remove:
  Bolts (M6) [A] and Collars
  Bolt (M8) [B] and Collar
  Rear Bottom Guard [C]

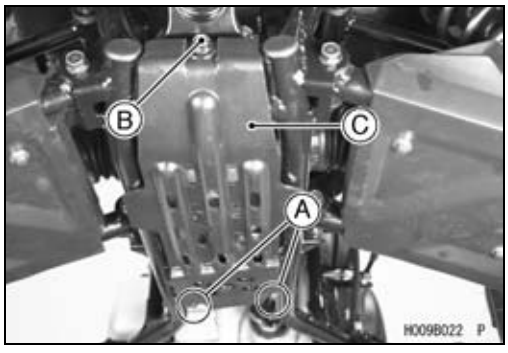

Rear Bottom Guard Installation

- Install:
  Rear Bottom Guard [A]
  Bolt (M8) [B] and Collar
  Bolts (M6) [C] and Collars

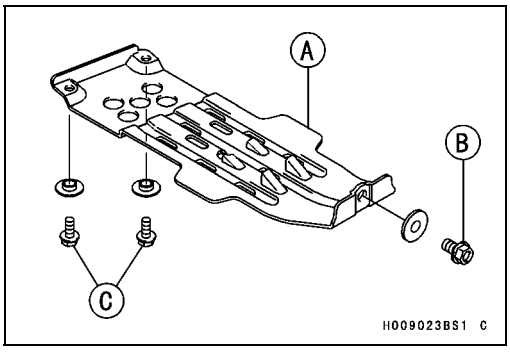

Flaps and Footboards

Left Footboard Removal

- Remove:
  Screws [A] and Collars
  Bolts [B] and Collars

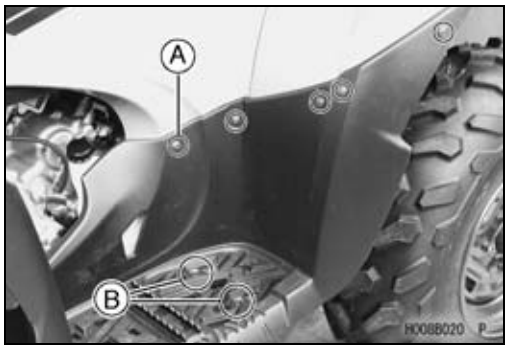

- Remove:
  Screws [A] and Collars
  Bolts [B] and Collars
  Left Footboard [C]

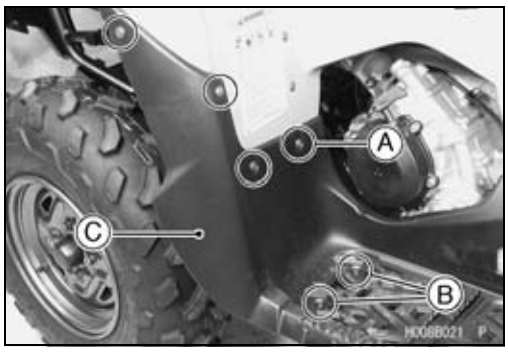

Left Footboard Installation

- Install:
  Left Footboard [A]
  Bolts [B] and Collars [C]
  Screws [D] and Collars [E]

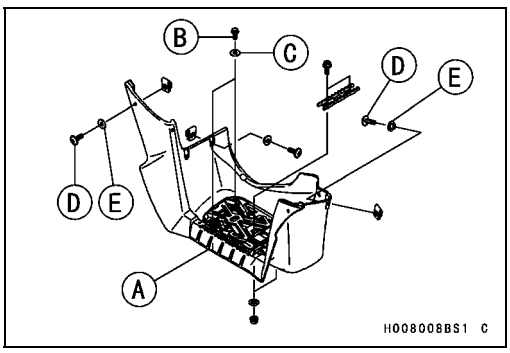

Right Footboard Removal

- Remove:
  Screws [A] and Collars
  Bolts [B] and Collars

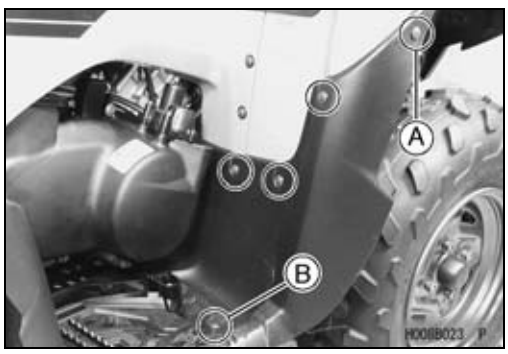

- Remove:
  Screws [A] and Collars
  Bolts [B] and Collars
  Right Footboard [C]

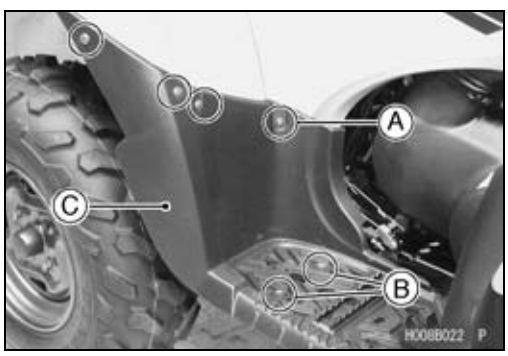

Flaps and Footboards

Right Footboard Installation

- Install:
  Right Footboard [A]
  Bolts [B] and Collars [C]
  Screws [D] and Collars [E]

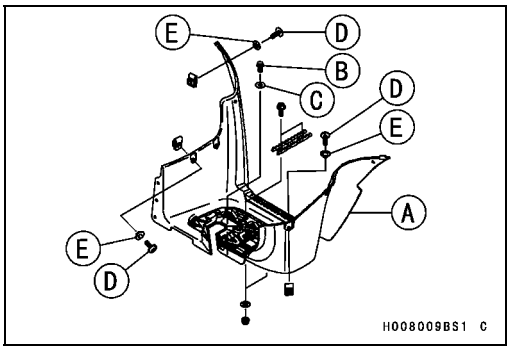

Footboard Bracket installation

- Install:
  Footboard Bracket [A]
- Tighten:

Torque - Footboard Bracket Bolts [B]: 47 N·m (4.8 kgf·m, 35 ft·lb)

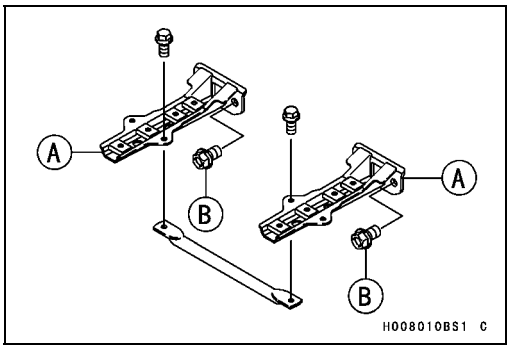

Trailer Hitch Bracket

Trailer Hitch Bracket Removal

- Remove:
  Trailer Hitch Bracket Bolts [A]
  Trailer Hitch Bracket [B]

Trailer Hitch Bracket Installation

- Install the trailer hitch bracket [A] as shown.
- Tighten:

Torque - Hitch Bracket Bolts: 82 N·m (8.3 kgf·m, 60 ft·lb)

Electrical System

Table of Contents

Parts Location

Light/Dimmer Switch [A]
Starter Button [B]
Engine Stop Switch [C]
Reverse Power Assist Switch (Override) [D]
Rear Brake Light Switch [E]
Power Outlet Connector [F] (120 W)

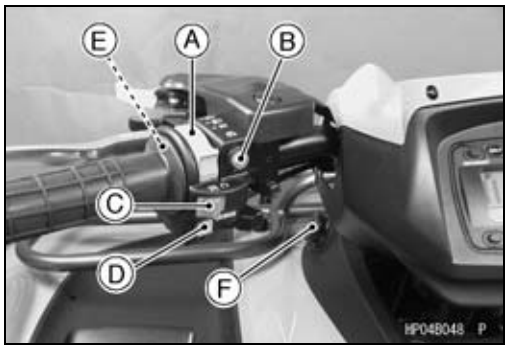

2WD/4WD Shift Switch [A]
Front Brake Light Switch [B]
Ignition Switch [C]

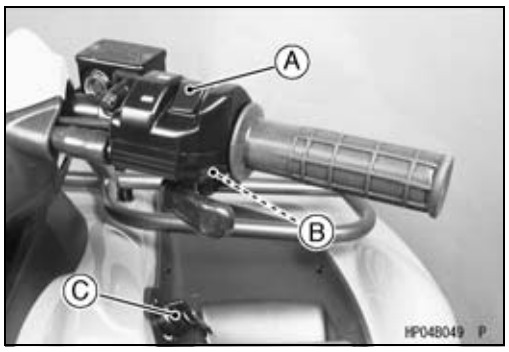

Battery [A]
Igniter [B]
Actuator Controller [C]
Reset Connectors [D]
Starter Circuit Relay (Neutral) [E]
Fuse Box [F]
Starter Relay [G]
Radiator Fan Breaker [H]
Vehicle Down Sensor [I]
Starter Circuit Relay (Brake) [J]

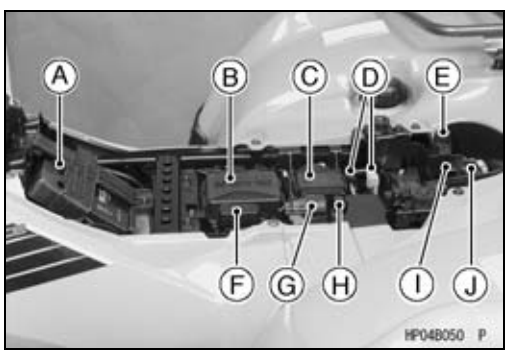

Radiator Fan Switch [A]
Radiator Fan [B]
Frame Ground Lead [C]
Ignition Coil [D]
Air Temperature Sensor [E]

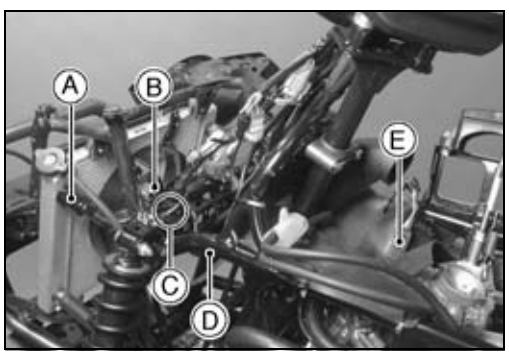

Spark Plug Cap [A]
Spark Plug [B]
Crankshaft Sensor [C]
Reverse Position Switch [D]
Neutral Position Switch [E]
Starter Motor [F]
Oil Pressure Warning Light Switch [G]
Alternator [H]
Forward/Reverse Detecting Sensor [I]

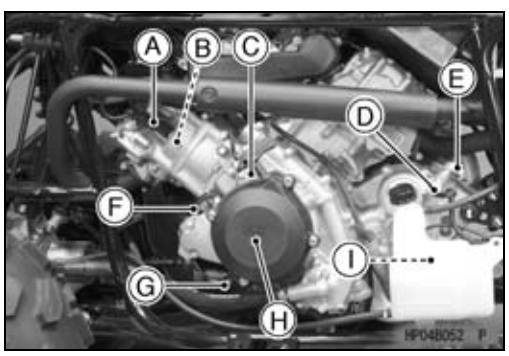

Parts Location

Frame Ground Lead [A]
Water Temperature Switch [B]
2WD/4WD Actuator [C]
Engine Brake Actuator [D]

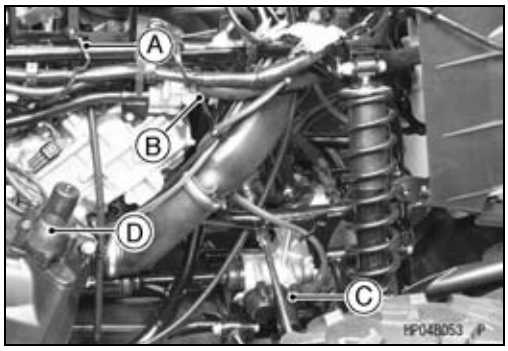

Spark Plug [A]
Engine Ground Lead [B]
Ignition Coil [C]
Frame Ground Lead [D]
Rear Brake Light Switch [E]
Speed Sensor [F]
Drive Belt Failure Detection Switch [G]
Engine Brake Actuator [H]

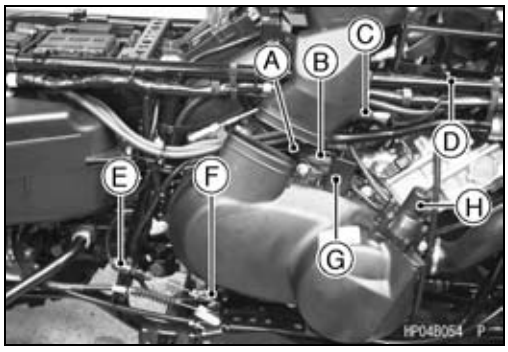

Regulator/Rectifier [A]

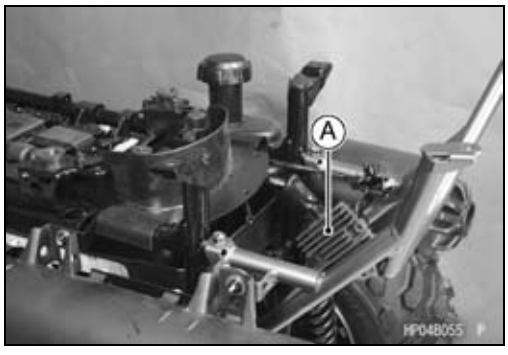

Parts Location

Multifunction Meter [A]
“SET/RESET” Button [B]
Belt Check Indicator Light [C]
Neutral Indicator Light [D]
Reverse Indicator Light [E]
Oil Pressure Warning Indicator Light [F]
“4WD” Indicator Light [G]
“2WD” Indicator Light [H]
Water Temperature Warning Symbol [I]
Fuel Level Gauge [J]
“TIME SET” Button [K]
Clock [L]
Speedometer [M]
Trip Meter/Odometer/Hour Meter [N]
“MODE” Button [O]

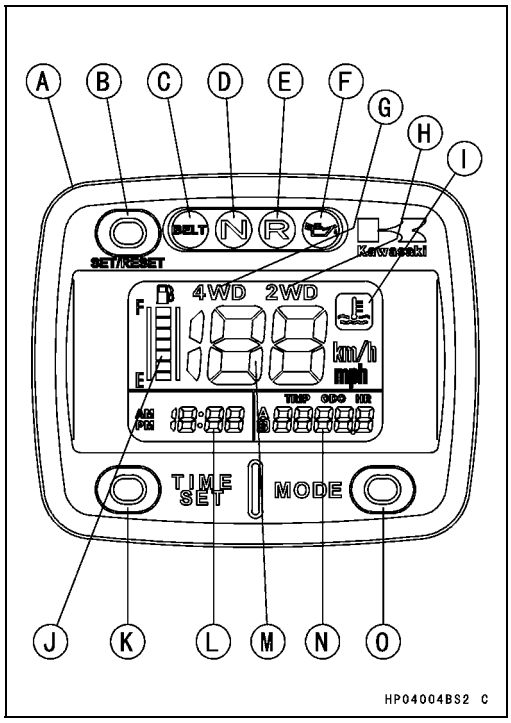

Exploded View

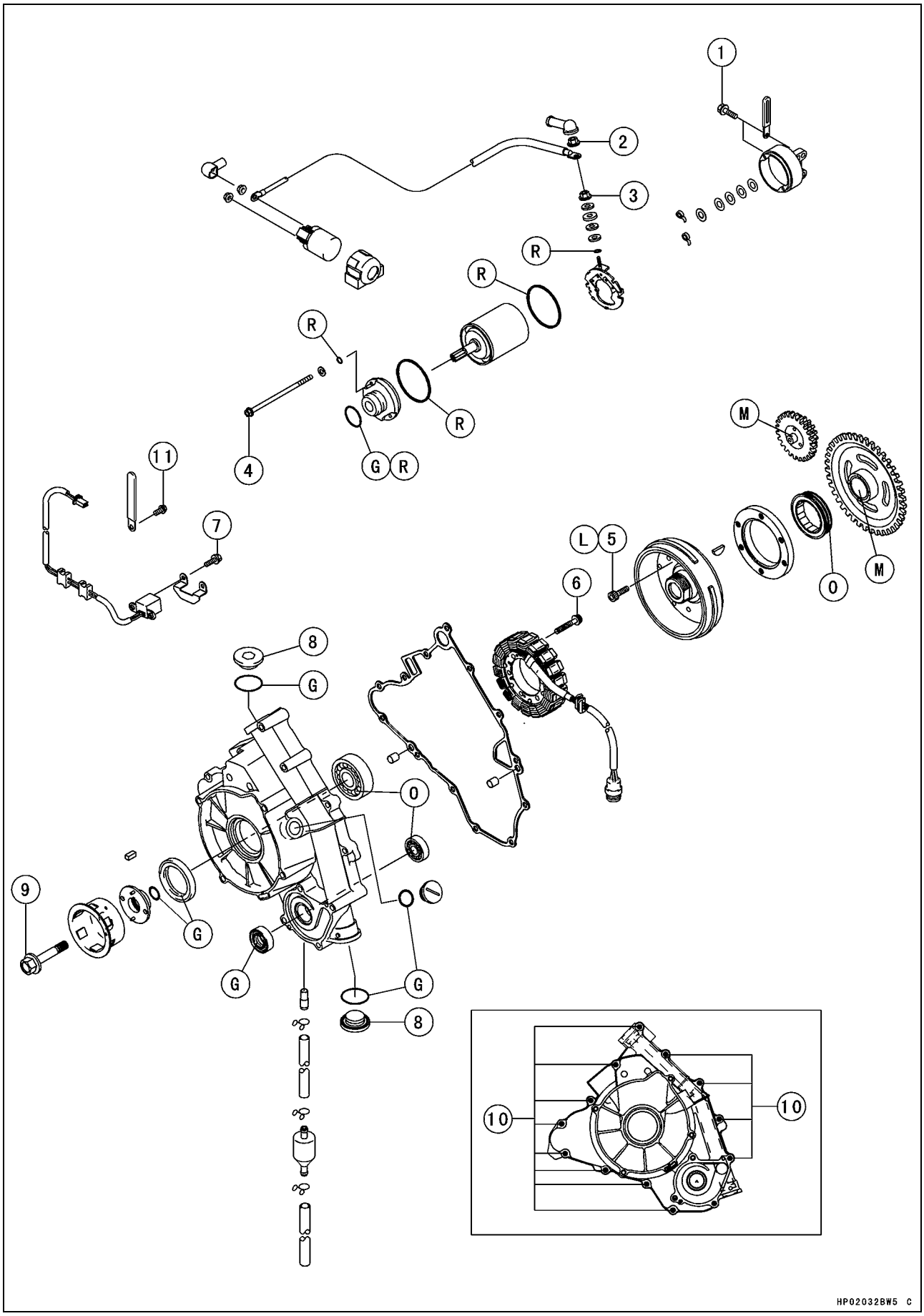

Exploded View

No.	Fastener	Torque			Remarks
		N·m	kgf·m	ft·lb	
1	Starter Motor Mounting Bolts	8.8	0.90	78 in·lb	
2	Starter Motor Cable Mounting Nut (KVF750-A1, B1, A6F, B6F, C6F)	4.9	0.50	43 in·lb	
	Starter Motor Cable Mounting Nut	6.9	0.70	61 in·lb	
3	Starter Motor Terminal Nut	6.9	0.70	61 in·lb	
4	Starter Motor Bolts	4.9	0.50	43 in·lb	
5	Starter Motor Clutch Bolts	34	3.5	25	L
6	Alternator Stator Bolts	13	1.3	113 in·lb	
7	Crankshaft Sensor Mounting Bolts	5.9	0.60	52 in·lb	
8	Alternator Cover Plugs	18	1.8	13	
9	Alternator Rotor Bolt	127	13	94	
10	Alternator Cover Bolts	8.8	0.90	78 in·lb	

G: Apply grease for oil seal and O-ring.
L: Apply a non-permanent locking agent.
M: Apply molybdenum disulfide grease.
O: Apply engine oil.
R: Replacement Parts

Exploded View

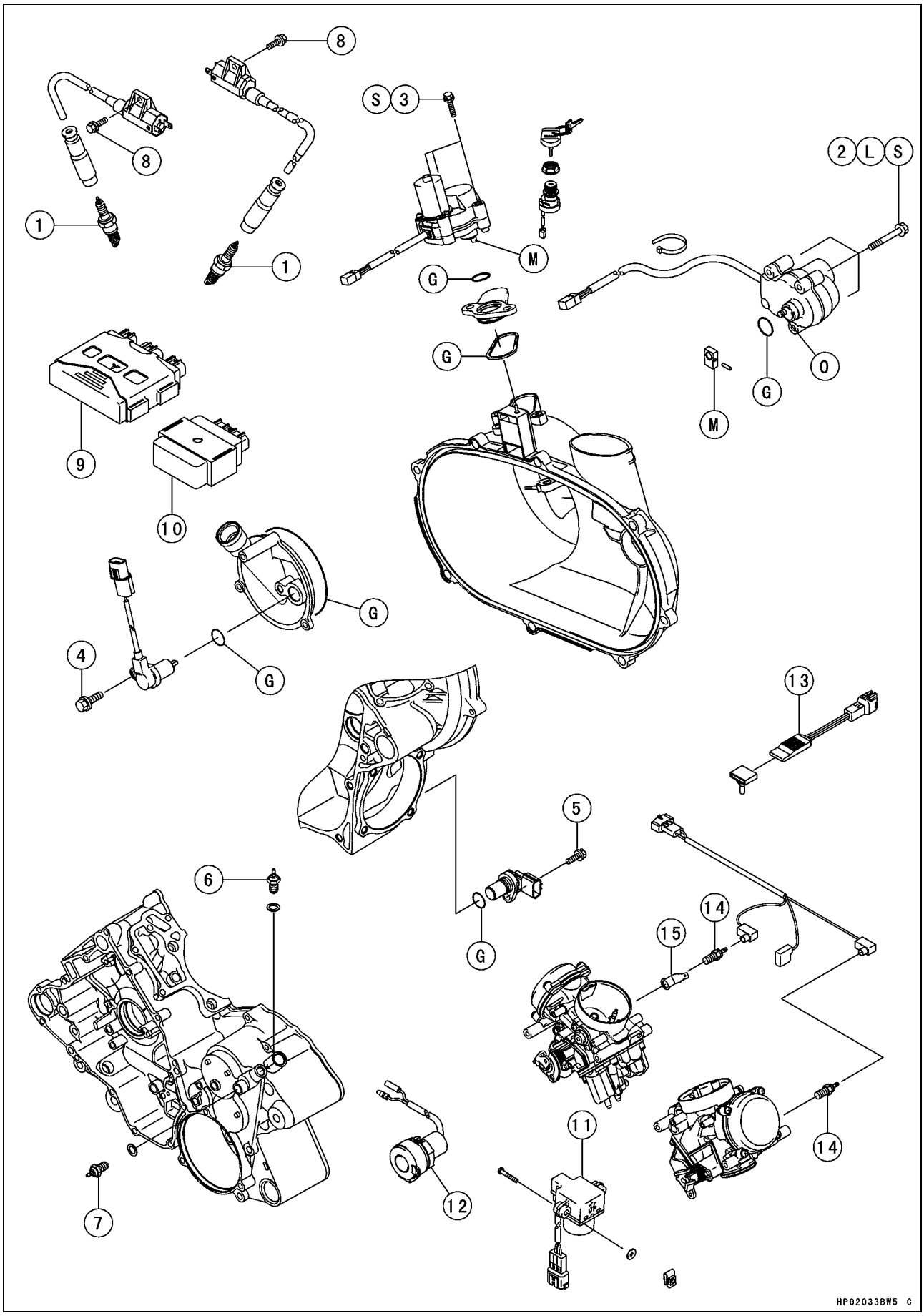

Exploded View

No.	Fastener	Torque			Remarks
		N·m	kgf·m	ft·lb	
1	Spark Plugs	13	1.3	113 in·lb	
2	2WD/4WD Actuator Mounting Bolts	9.8	1.0	87 in·lb	L, S
3	Engine Brake Actuator Mounting Bolts	8.8	0.90	78 in·lb	
4	Forward/Reverse Detecting Sensor Mounting Bolt	15	1.5	11	
5	Speed Sensor Mounting Bolt	8.8	0.90	78 in·lb	
6	Neutral Position Switch	15	1.5	11	
7	Reverse Position Switch	15	1.5	11	
8	Ignition Coil Mounting Bolts	6.9	0.70	61 in·lb	

9. Igniter
10. Actuator Controller
11. Vehicle Down Sensor
12. Power Outlet Connector (120 W)
13. Air Temperature Sensor
14. Carburetor Heaters
15. Ground Terminal

G: Apply grease.
L: Apply a non-permanent locking agent.
S: Follow the specific tightening sequence.

Exploded View

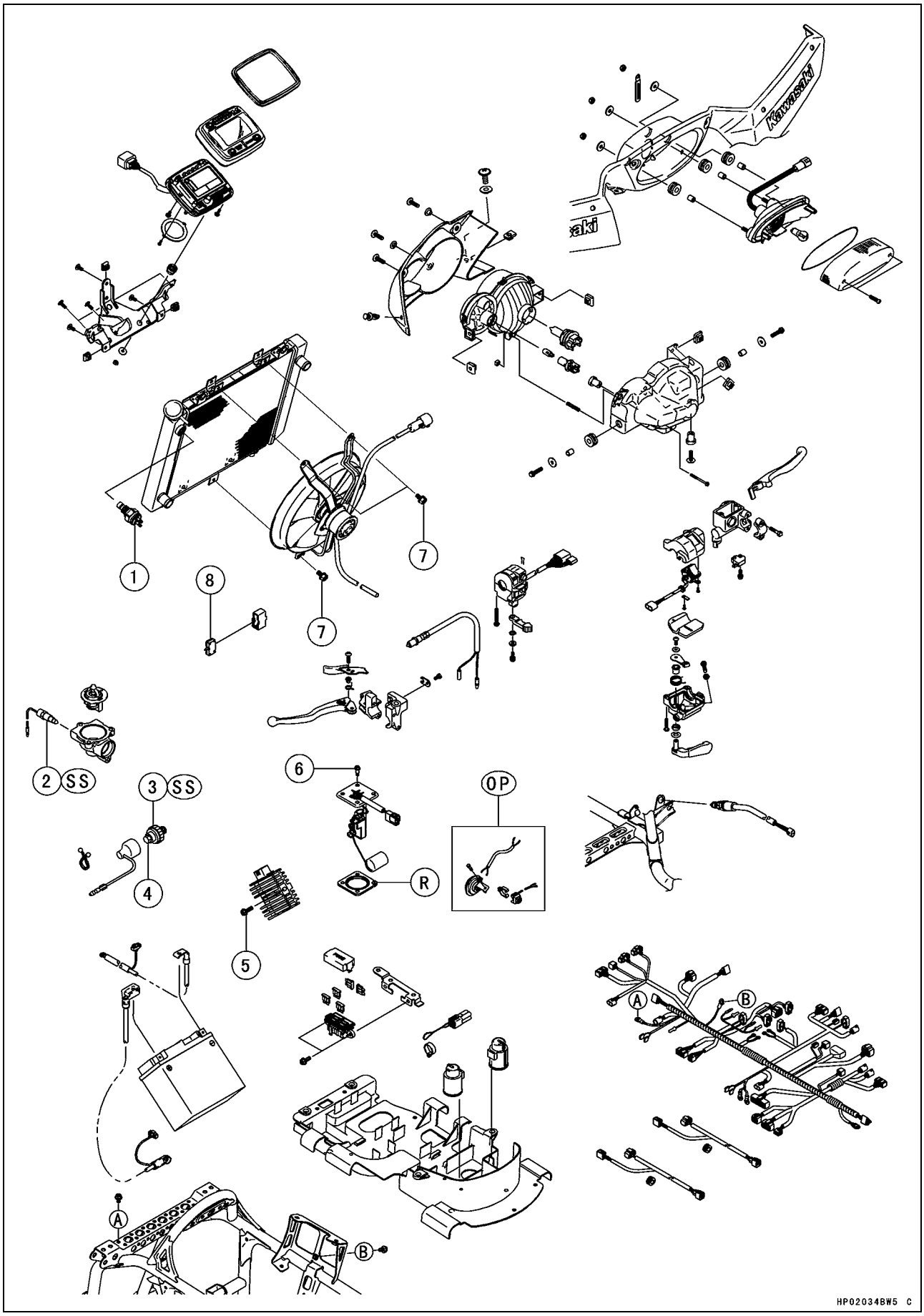

Exploded View

No.	Fastener	Torque			Remarks
		N·m	kgf·m	ft·lb	
1	Radiator Fan Switch	18	1.8	13	
2	Water Temperature Switch	6.9	0.70	61 in·lb	SS
3	Oil Pressure Switch	15	1.5	11	SS
4	Oil Pressure Switch Terminal Bolt	1.5	0.15	13 in·lb	
5	Regulator/Rectifier Mounting Bolts	8.8	0.90	78 in·lb	
6	Fuel Level Sensor Mounting Bolts	2.0	0.20	18 in·lb	

7. Radiator Fan Breaker
OP: Optional Parts for United States and Canada models
R: Replacement Part (Fuel Pump Gasket)
SS: Apply silicone sealant (Kawasaki Bond: 56019-120).

Specifications

Item	Standard	Service Limit
Battery		
Type	Sealed Battery	– – –
Capacity	12 V 12 Ah	– – –
Charging System		
Alternator Type	Three-phase AC	– – –
Charging Voltage (Regulator/Rectifier Output Voltage)	14 ~ 15 V	– – –
Alternator Output Voltage	38 ~ 58 V @3 000 r/min (rpm)	– – –
Stator Coil Resistance	0.29 ~ 0.43 Ω	– – –
Ignition System		
Spark Plug:		
Spark Plug Gap	0.7 ~ 0.8 mm (0.028 ~ 0.031 in.)	– – –
Spark Plug Cap Resistance	3.75 ~ 6.25 kΩ	– – –
Ignition Coil:		
3 Needle Arcing Distance	7 mm (0.28 in.) or more	– – –
Primary Winding Resistance	0.09 ~ 0.13 Ω	– – –
Secondary Winding Resistance	3.8 ~ 5.8 kΩ	– – –
Primary Peak Voltage	120 V or more	– – –
Crankshaft Sensor Resistance	423 ~ 517 Ω	– – –
Crankshaft Sensor Peak Voltage	2 V or more	– – –
Vehicle-Down Sensor		
Detection Method	Magnetic flux detection method	– – –
Detection Angle	More than 65° ±5° for each bank	– – –
Detection Time	Within 0.5 ~ 1.0 second	– – –
Output Voltage	in the text	– – –
Electric Starter System		
Starter Motor:		
Commutator Diameter	28 mm (1.10 in.)	27 mm (1.06 in.)
Brush Length	12.5 mm (0.49 in.)	5 mm (0.20 in.)
Fuel Level Sensor		
Fuel Level Sensor Resistance:		
Full Level Position	3 Ω	– – –
Empty Level Position	120 Ω	– – –
Actuator Control System		
Actuator Resistance	in the text	– – –
Forward/Reverse Detecting Sensor Resistance	1.2 ~ 1.6 kΩ	– – –
Carburetor Heater System		
Carburetor Heater Resistance	11 ~ 20 Ω	– – –
Switches		
Brake Light Switch Timing	ON after 10 mm (0.4 in.) of pedal travel	– – –

Specifications

Item	Standard	Service Limit
Radiator Fan Switch Resistance:		
Rising Temperature	From OFF to ON at 96 ~ 100°C (205 ~ 212°F)	– – –
Falling Temperature	From ON to OFF at 91 ~ 95°C (196 ~ 203°F) ON: Less than 0.5 Ω OFF: More than 1 MΩ	– – –
Coolant Temperature Warning Light Switch Resistance:		
Rising Temperature	From OFF to ON at 112 ~ 118°C (234 ~ 244°F)	– – –
Falling Temperature	From ON to OFF at 108 ~ 111°C (226 ~ 232°F) ON: less than 0.5 Ω OFF: More than 1 MΩ	– – –

KVF750A/B/C Wiring Diagram (United States, Canada Models)

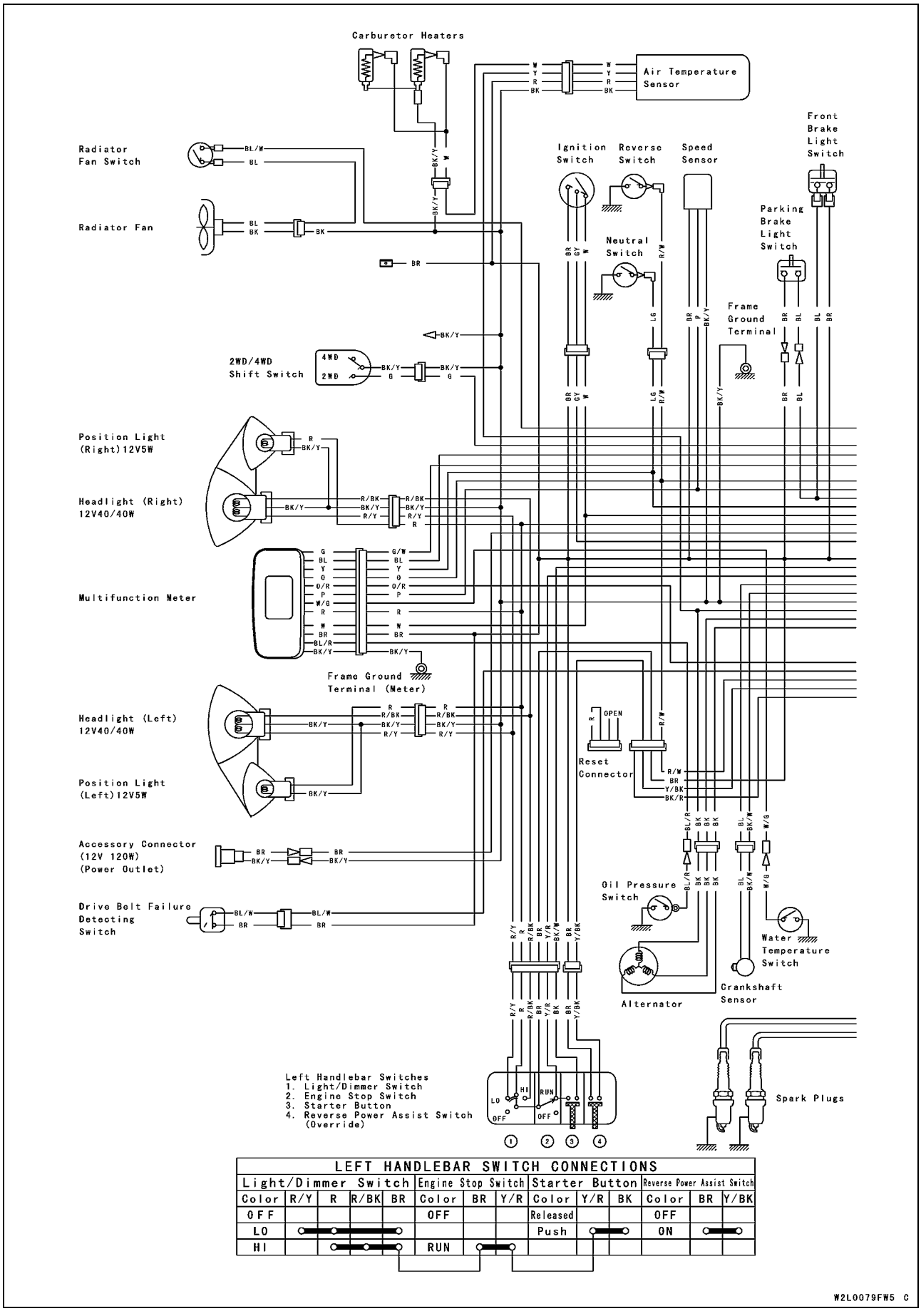

LEFT HANDLEBAR SWITCH CONNECTIONS

Light/Dimmer Switch					Engine Stop Switch			Starter Button			Reverse Power Assist Switch		
Color	R/Y	R	R/BK	BR	Color	BR	Y/R	Color	Y/R	BK	Color	BR	Y/BK
OFF					OFF			Released			OFF		
LO	●	●	●	●				Push	●	●	ON	●	●
HI		●	●	●	RUN	●	●						

KVF750A/B/C Wiring Diagram (United States, Canada Models)

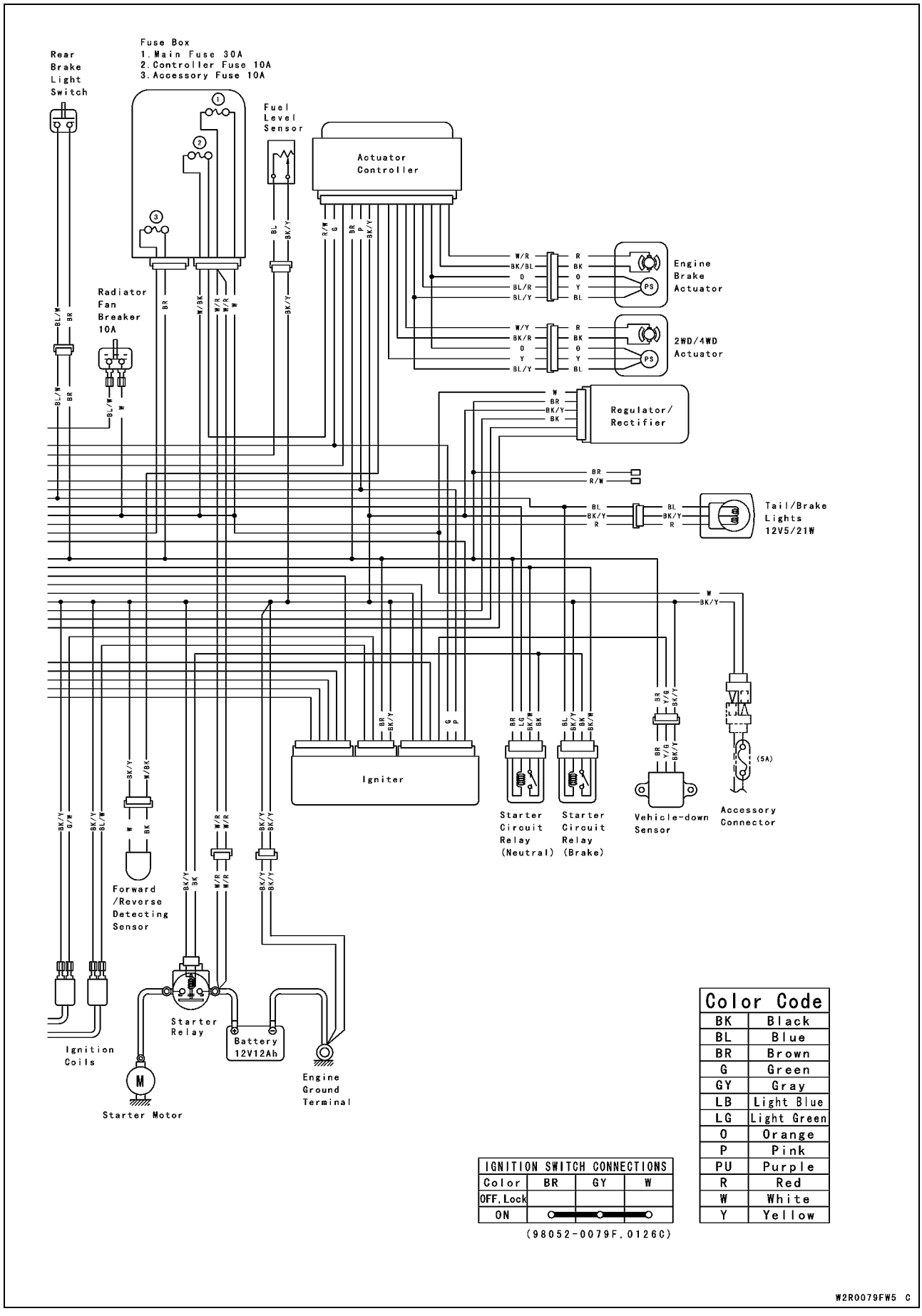

KVF750A Wiring Diagram (Australia Model)

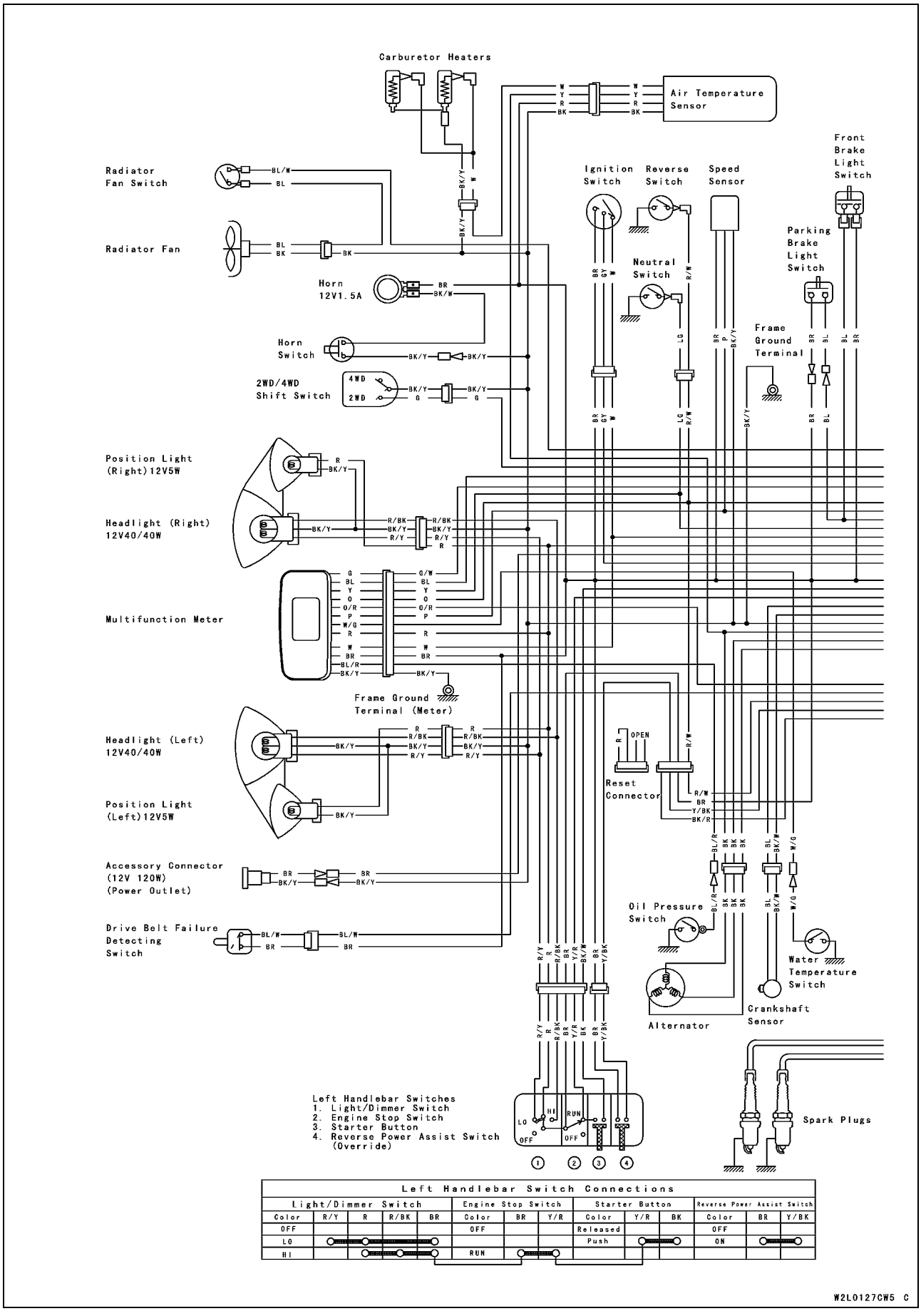

Left Handlebar Switch Connections

Light/Dimmer Switch					Engine Stop Switch			Starter Button			Reverse Power Assist Switch		
Color	R/Y	R	R/BK	BR	Color	BR	Y/R	Color	Y/R	BK	Color	BR	Y/BK
OFF					OFF			Released			OFF		
LO		○	○	○				Push	○	○	ON	○	○
HI		○	○	○	RUN	○	○						

KVF750A Wiring Diagram (Australia Model)

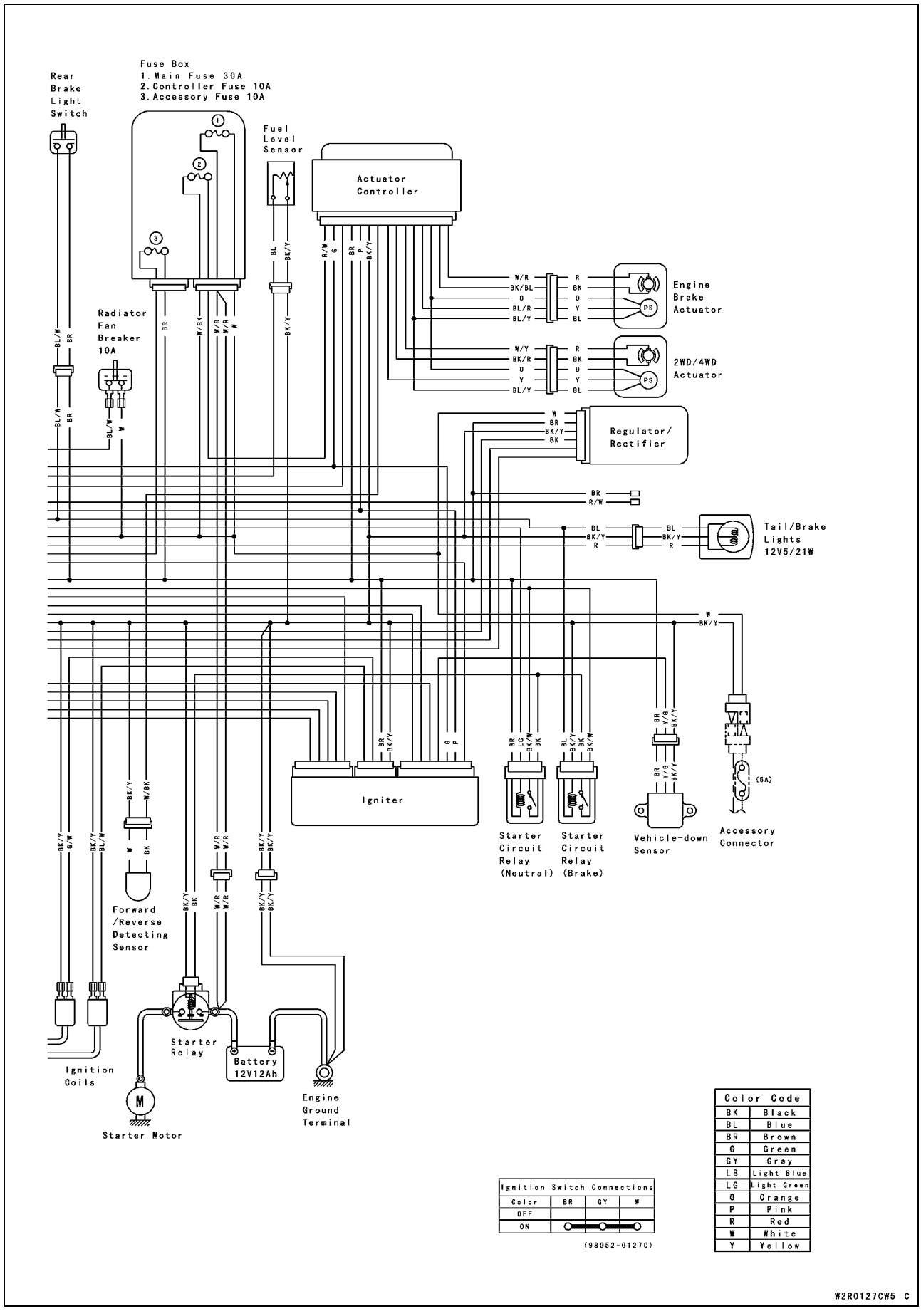

KVF750A Wiring Diagram (Europe Model)

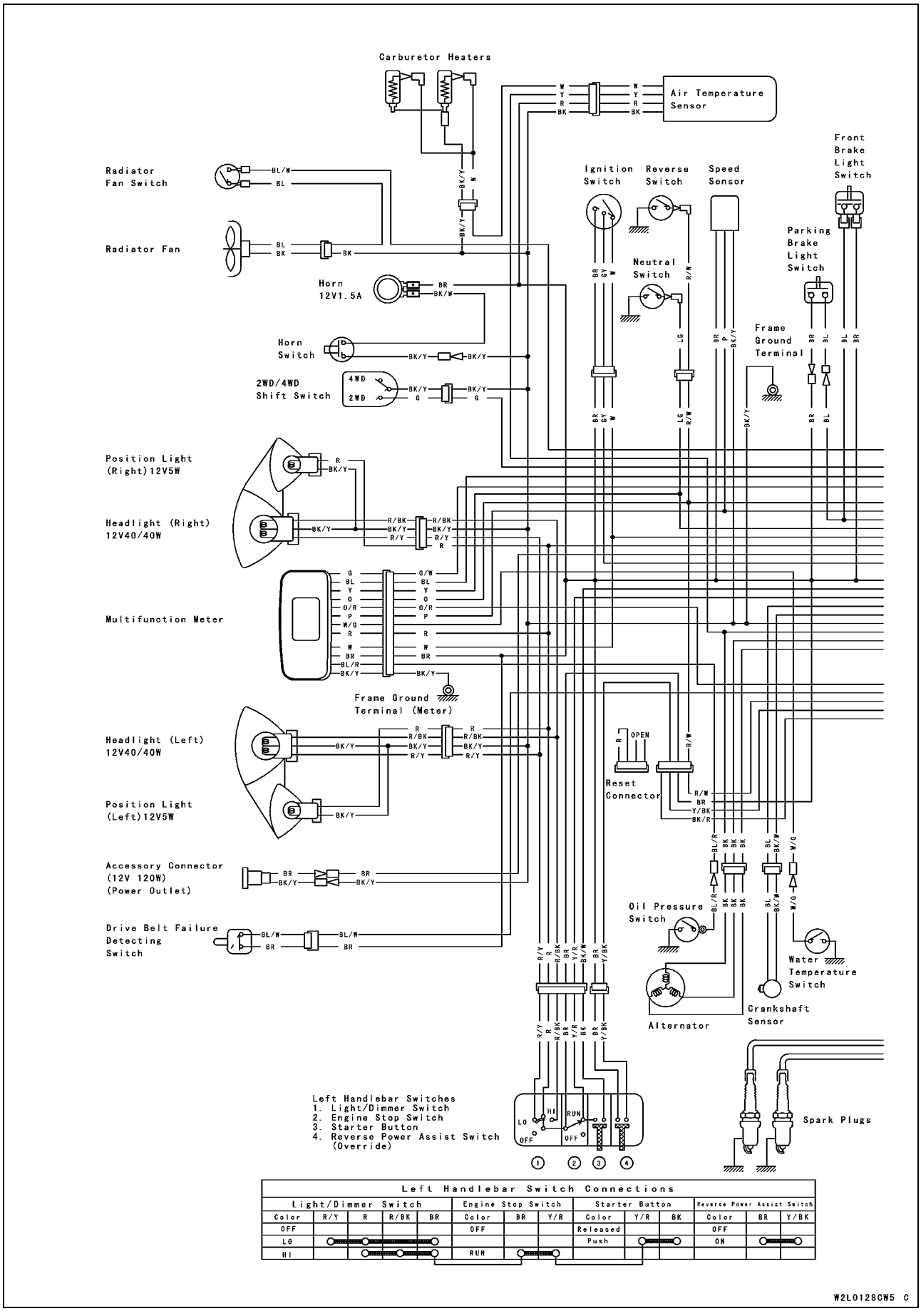

Left Handlebar Switch Connections

Light/Dimmer Switch					Engine Stop Switch			Starter Button			Reverse Power Assist Switch		
Color	R/Y	R	R/BK	BR	Color	BR	Y/R	Color	Y/R	BK	Color	BR	Y/BK
OFF					OFF			Released			OFF		
LO		○	○	○				Push	○	○	ON	○	○
HI		○	○	○	RUN	○	○						

KVF750A Wiring Diagram (Europe Model)

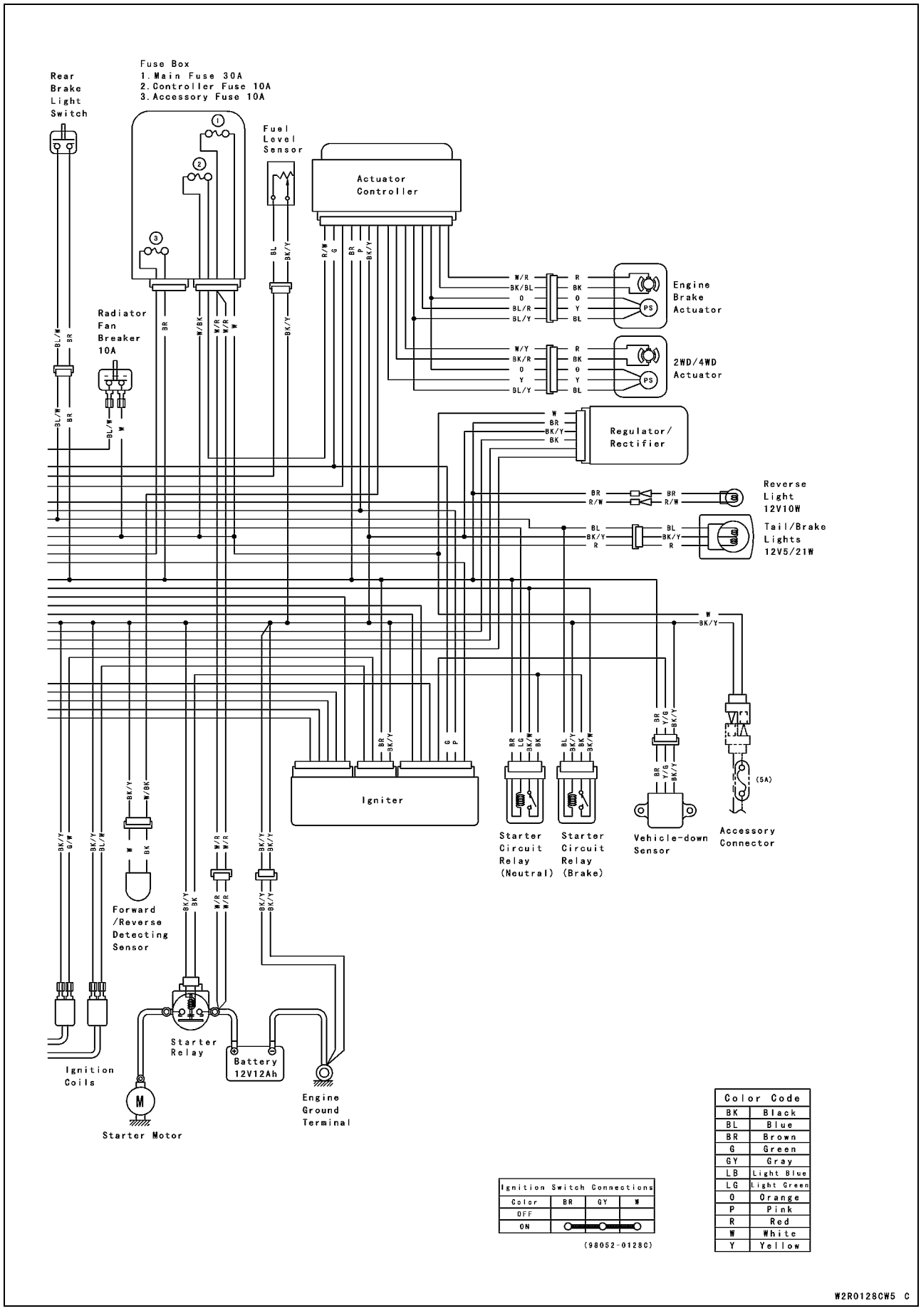

Special Tools and Sealant

Timing Light:
57001-1241

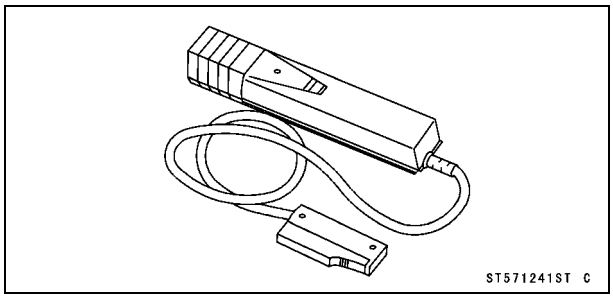

Peak Voltage Adapter:
57001-1415

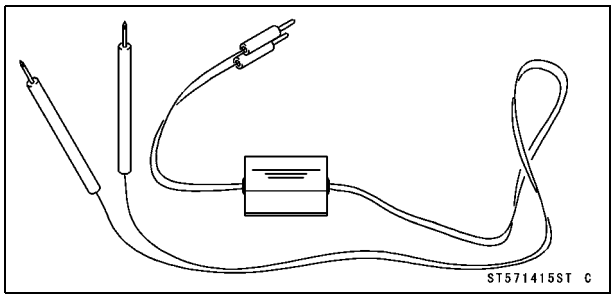

Flywheel Holder:
57001-1313

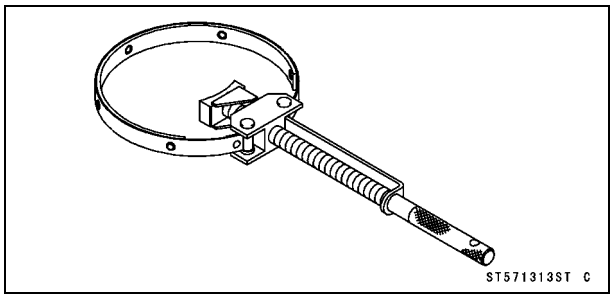

Needle Adapter Set:
57001-1457

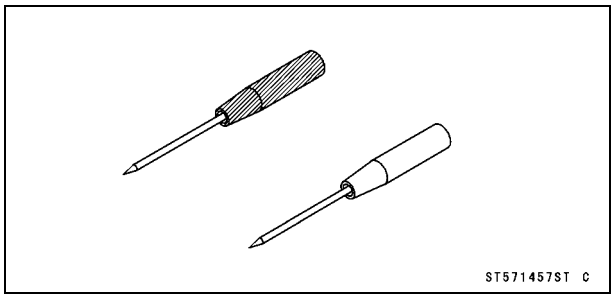

Hand Tester:
57001-1394

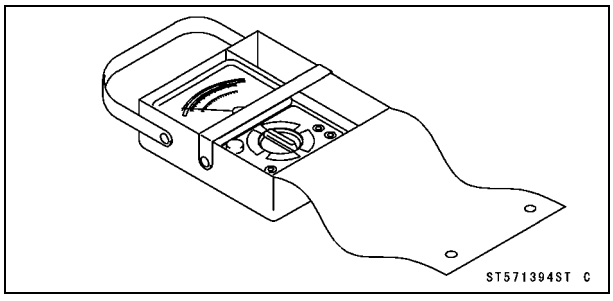

Drive Pulley Holder:
57001-1620

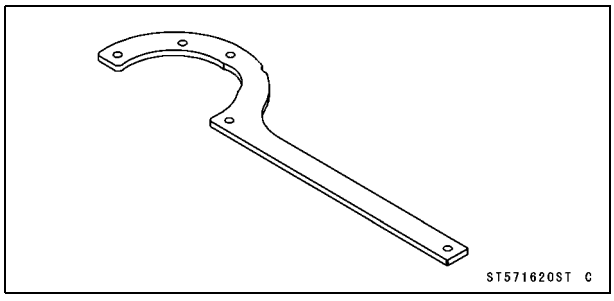

Flywheel Puller Assembly, M38 × 1.5/M35 × 1.5:
57001-1405

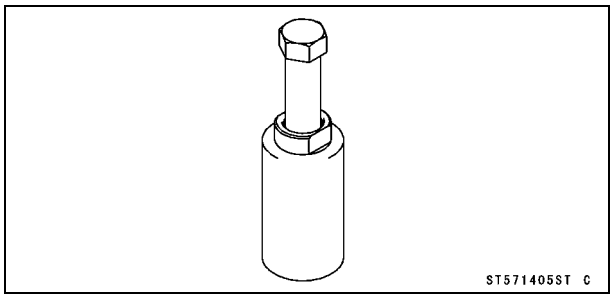

Kawasaki Bond (Silicone Sealant):
56019-120

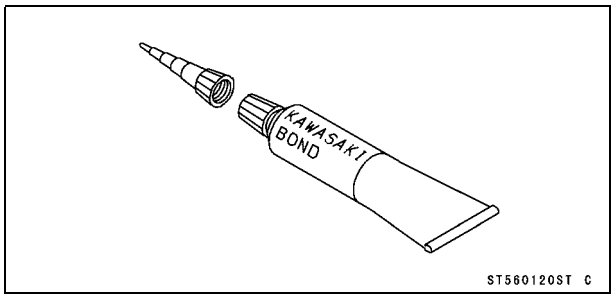

Precautions

There are a number of important precautions that should be taken when servicing electrical systems. Learn and observe all the rules below.

- Do not reverse the battery lead connections. This will burn out the diodes in the electrical parts.
- Always check battery condition before condemning other parts of an electrical system. A fully charged battery is required for conducting accurate electrical system tests.
- The electrical parts should never be struck sharply, as with a hammer, or allowed to fall on a hard surface. Such a shock to the parts can damage them.
- To prevent damaging electrical parts, do not disconnect the battery leads or any other electrical connections when the ignition switch is on, or while the engine is running.
- Because of the high current, never keep the starter button depressed when the starter motor will not turn over, or the current may burn out the starter motor windings.
- Only use an illumination bulb rated for the voltage or wattage specified in the wiring diagram, or the handle cover could be warped by excessive heat radiated from the bulb.
- Take care not to short the leads that are directly connected to the battery positive (+) terminal to chassis ground.
- Troubles may involve one or in some cases all items. Never replace a defective part without determining what CAUSED the failure. If the failure was caused by some other item or items, they too must be repaired or replaced, or the new replacement will soon fail again.
- Make sure all connectors in the circuit are clean and tight, and examine wires for signs of burning, fraying, etc. Defective wires and bad connections will affect electrical system operation.
- Measure coil and winding resistance when the part is cold (at room temperature).
- Color Codes:

BK	Black	G	Green	P	Pink
BL	Blue	GY	Gray	PU	Purple
BR	Brown	LB	Light blue	R	Red
CH	Chocolate	LG	Light green	W	White
DG	Dark green	O	Orange	Y	Yellow

Precautions

○Electrical Connectors:
Female Connectors [A]

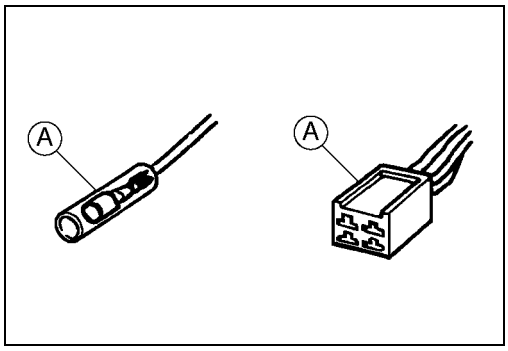

Male Connectors [B]

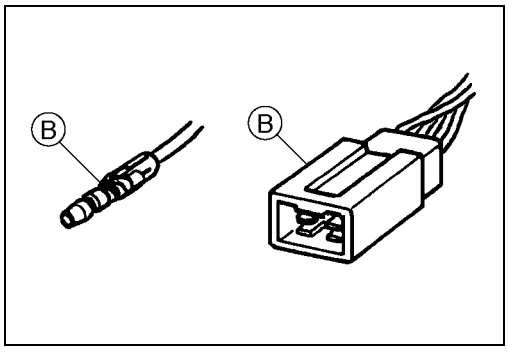

Electrical Wiring

Wiring Inspection

- Visually inspect the wiring for signs of burning, fraying, etc.

★If any wiring is defective, replace the damaged wiring.

- Pull each connector [A] apart and inspect for corrosion, dirt, and damage.

★If the connector is corroded or dirty, clean it carefully. If it is damaged, replace it.

- Check the wiring for continuity.

○Use the wiring diagram to find the ends of the lead which is suspected of being a problem.

○Connect the hand tester between the ends of the leads.

Special Tool - Hand Tester: 57001-1394

○Set the tester to the ×1 Ω range.

★If the tester does not read 0 Ω, the lead is defective. Replace the lead or the wiring harness [B] if necessary.

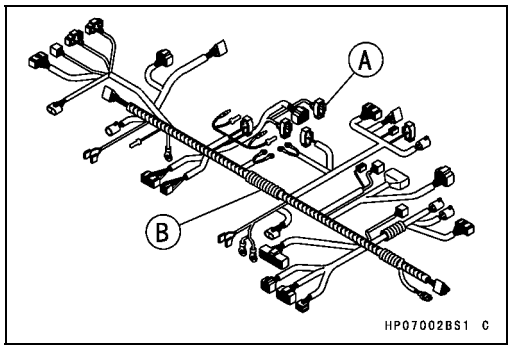

Battery

Battery Removal

- Turn off the ignition switch.
- Remove:
  Seat (see Seat Removal in the Frame chapter)
  Battery Holder Bolts [A] and Collars
  Battery Holder [B]
- Disconnect the battery negative (–) cable [C] first, and then the positive (+) cable [D].
- Take out the battery [E].

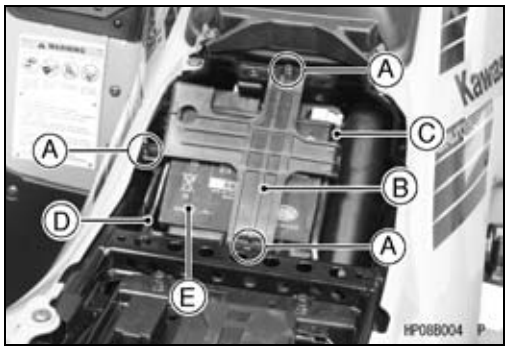

Battery Installation

- Turn off the ignition switch.
- Install:
  Rubber Dampers [A]
  Clamp Nut [B]
- Connect the positive cable first and then the negative.
- Put a light coat of grease on the terminals to prevent corrosion.
- Install:
  Battery Holder [C]
  Collars [D]
  Battery Holder Bolts [E]

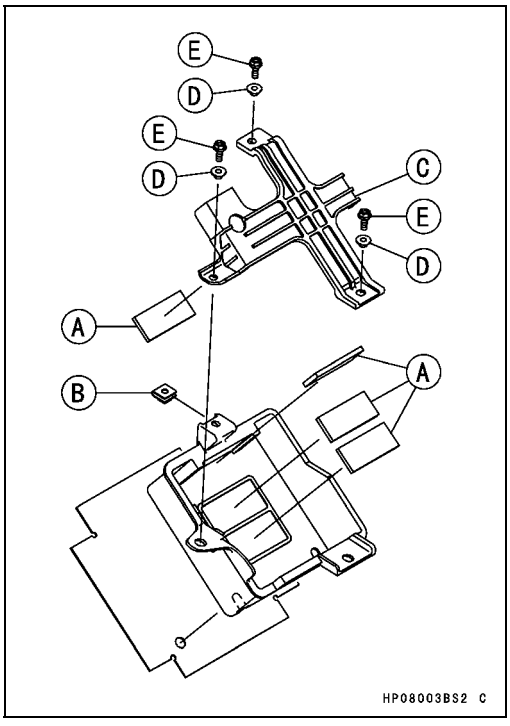

Battery Activation

Electrolyte Filling

- Make sure that the model name [A] of the electrolyte container matches the model name [B] of the battery. These names must be the same.

Battery Model Name for KVF750-A/B/C: KMX 14-BS

CAUTION
Be sure to use the electrolyte container with the same model name as the battery since the electrolyte volume and specific gravity vary with the battery type. This is to prevent overfilling of the electrolyte, shorting the battery life, and deterioration of the battery performance.

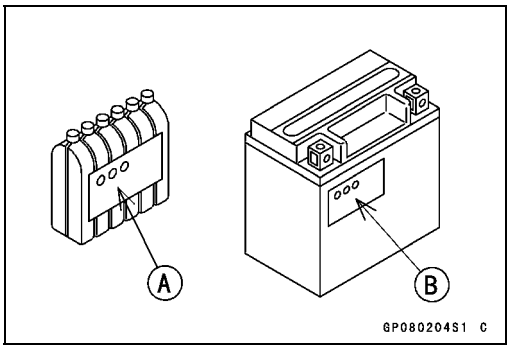

Battery

CAUTION

Do not remove the aluminum sealing sheet [A] from the filler ports [B] until just prior to use. Be sure to use the dedicated electrolyte container for correct electrolyte volume.

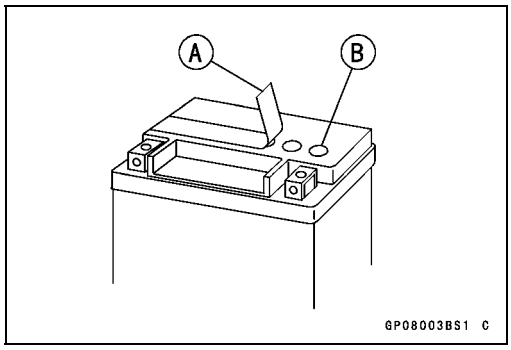

- Place the battery on a level surface.
- Check to see that the sealing sheet has no peeling, tears, or holes in it.
- Remove the sealing sheet.

NOTE

○*The battery is vacuum sealed. If the sealing sheet has leaked air into the battery, it may require a longer initial charge.*

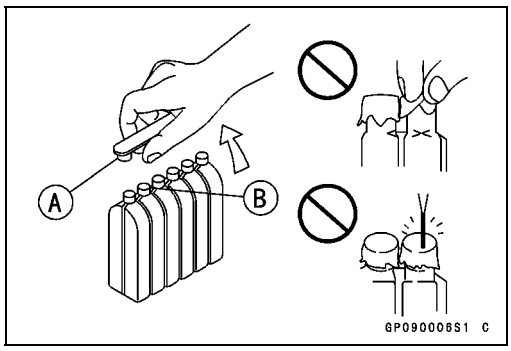

- Remove the electrolyte container from the vinyl bag.
- Detach the strip of caps [A] from the container and set aside, these will be used later to seal the battery.

NOTE

○*Do not pierce or otherwise open the sealed cells [B] of the electrolyte container. Do not attempt to separate individual cells.*

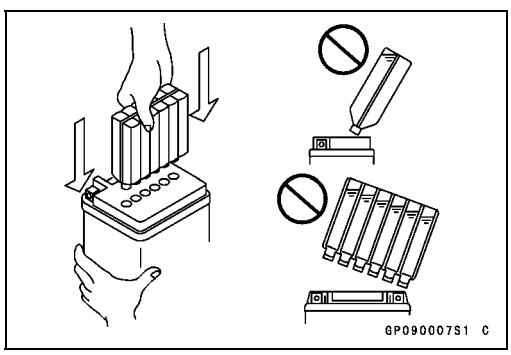

- Place the electrolyte container upside down with the six sealed cells into the filler ports of the battery. Hold the container level, push down to break the seals of all six cells. You will see air bubbles rising into each cell as the ports fill.

NOTE

○*Do not tilt the electrolyte container*

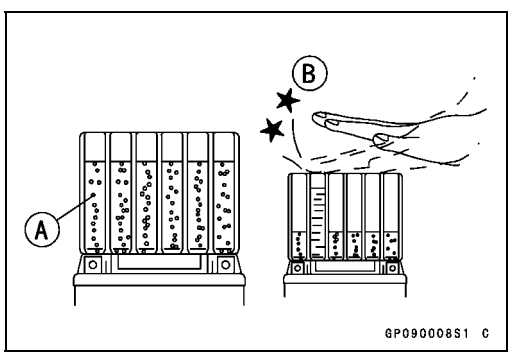

- Check the electrolyte flow.

★If no air bubbles [A] are coming up from the filler ports, or if the container cells have not emptied completely, tap the container [B] a few times.

- Keep the container in place for **20** minutes or more. Don't remove the container from the battery until it's empty, the battery requires all the electrolyte from the container for proper operation.

CAUTION

Removal of the container before it is completely empty can shorten the service life of the battery. Do not remove the electrolyte container until it is completely empty and 20 minutes have elapsed.

- Gently remove the container from the battery.
- Let the battery sit for **60** minutes prior to charging to allow the electrolyte to permeate into the plates for optimum performance.

NOTE

○*Charging the battery immediately after filling can shorten service life. Let the battery sit for at least **60** minutes after filling.*

Initial Charge

- Place the strip [A] of caps loosely over the filler ports.
- Newly activated sealed batteries require an initial charge.

Standard Charge **1.2 A × 5 ~ 10 hours**

★If using a recommended battery charger, follow the charger's instructions for newly activated sealed battery.

Kawasaki-recommended chargers:
Optimate III
Yuasa 1.5 Amp Automatic Charger
Battery Mate 150–9

★If the above chargers are not available, use equivalent one.

NOTE

○*Charging rates will vary depending on how long the battery has been stored, temperature, and the type of charger used. Let battery sit 30 minutes after initial charge, then check voltage using a voltmeter. If it is not at least 12.8 volts, repeat charging cycle.*

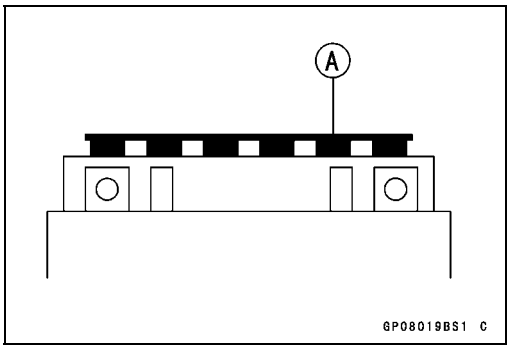

- After charging is completed, press down firmly with both hands to seat the strip of caps [A] into the battery (don't pound or hammer). When properly installed, the strip of the caps will be level with the top of the battery.

CAUTION

Once the strip of the caps [A] is installed onto the battery, never remove the caps, nor add water or electrolyte to the battery.

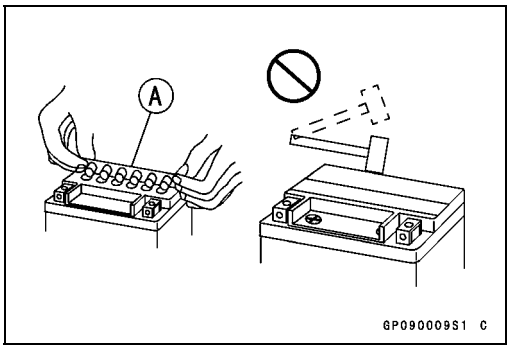

NOTE

○*To ensure maximum battery life and customer satisfaction, it is recommended the battery be load tested at three times its amp-hour rating for 15 seconds.*
Re-check voltage and if less than 12.8 volts repeat the charging cycle and load test. If still below 12.8 volts the battery is defective.

Precautions

1) No need of topping-up
   No topping-up is necessary in this battery until it ends its life under normal use. Forcibly prying off the sealing plug to add water is very dangerous. Never do that.
2) Refreshing charge

Battery

If an engine will not start, a horn sounds weak, or lamps are dim, it indicates the battery has been discharged. Give refresh charge for 5 to 10 hours with charge current shown in the specification (see Refreshing Charge).

When a fast charge is inevitably required, do it following precisely the maximum charge current and time conditions indicated on the battery.

CAUTION

This battery is designed to sustain no unusual deterioration if refresh-charged according to the method specified above. However, the battery's performance may be reduced noticeably if charged under conditions other than given above.
Never remove the seal caps during refresh charge.
If by chance an excessive amount of gas is generated due to overcharging, the safety valve operates to keep the battery safe.

3) When you do not use the motorcycle for months
   Give a refresh charge before you store the motorcycle and store it with the negative lead removed. Give a refresh charge once a month during storage.
4) Battery life
   If the battery will not start the engine even after several refresh charges, the battery has exceeded its useful life. Replace it. (Provided, however, the vehicle's starting system has no problem.)

⚠ WARNING

Keep the battery away from sparks and open flames during charging, since the battery gives off an explosive gas mixture of hydrogen and oxygen. When using a battery charger, connect the battery to the charger before turning on the charger. This procedure prevents sparks at the battery terminals which could ignite any battery gases.
No fire should be drawn near the battery, or no terminals should have the tightening loosened.
The electrolyte contains sulfuric acid. Be careful not to have it touch your skin or eyes. If touched, wash it off with liberal amount of water. Get medical attention if severe.

Interchange

A sealed battery can fully display its performance only when combined with a proper vehicle electrical system. Therefore, replace a sealed battery only on a vehicle which was originally equipped with a sealed battery.

Be careful, if a sealed battery is installed on a vehicle which had an ordinary battery as original equipment, the sealed battery's life will be shortened.

Charging Condition Inspection

Battery charging condition can be checked by measuring battery terminal voltage.

- Remove the battery (see Battery Removal).

CAUTION

Be sure to disconnect the negative (−) cable first.

- Measure the battery terminal voltage.

NOTE

○*Measure with a digital voltmeter [A] which can be read to one decimal place voltage.*

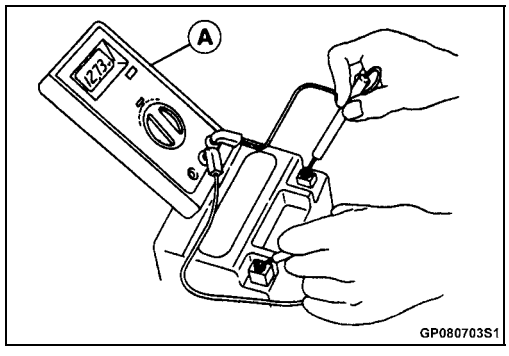

Battery

★If the reading is below the specified, refreshing charge is required.

Battery Terminal Voltage
Standard: 12.8 V or more

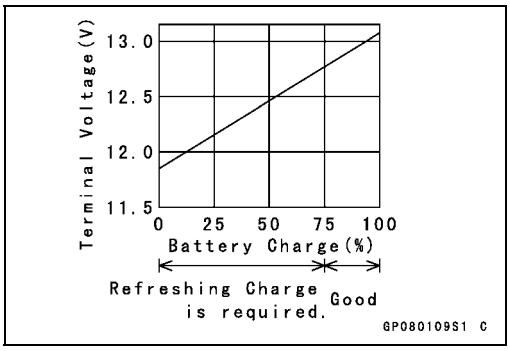

Refreshing Charge

- Remove the battery [A] (see Battery Removal).
- Refresh-charge by following method according to the battery terminal voltage.

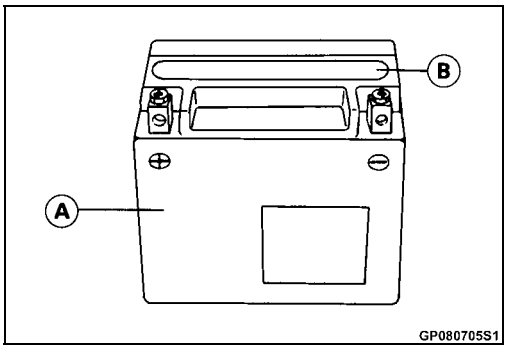

⚠ WARNING

This battery is sealed type. Never remove seal sheet [B] even at charging. Never add water. Charge with current and time as stated below.

Terminal Voltage: 11.5 ~ less than 12.8 V
Standard Charge
1.2 A × 5 ~ 10 h (see following chart)
Quick Charge
6.0 A × 1.0 h

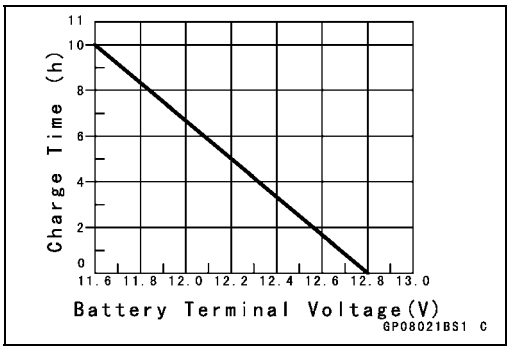

CAUTION

If possible, do not quick charge. If the quick charge is done due to unavoidable circumstances, do the standard charge later on.

Terminal Voltage: less than 11.5 V
Charging Method: 1.2 A × 20 h

NOTE

○*Increase the charging voltage to a maximum voltage of 25 V if the battery will not accept current initially. Charge for no more than 5 minutes at the increased voltage then check if the battery is drawing current. If the battery will accept current [D], decrease the voltage and charge by the standard charging method described on the battery case. If the battery will not accept current after 5 minutes, replace the battery.*

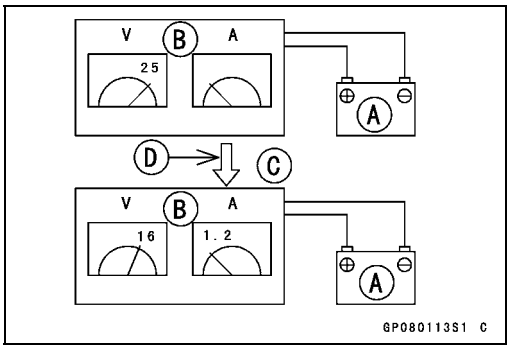

Battery [A]
Battery Charger [B]
Standard Value [C]

Battery

● Determine battery condition after refreshing charge.

○Determine the condition of the battery 30 minutes after completion of the charge by measuring the terminal voltage according to the table below.

Criteria	Judgement
12.8 V or higher	Good
12.0 ~ 12.8 V or lower	Charge insufficient → Recharge
12.0 V or lower	Unserviceable → Replace

Alternator Cover Removal

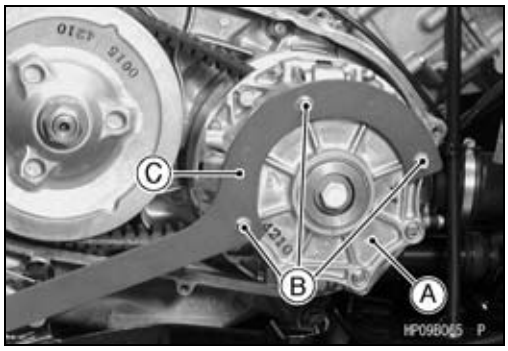

- Drain:
  Coolant (see Coolant Draining in the Cooling System chapter)
  Oil (see Engine Oil Change in the Periodic Maintenance chapter)
- Remove:
  Recoil Starter (see Recoil Starter Removal in the Recoil Starter chapter)
  Water Pump Impeller (see Water Pump Impeller Removal in the Cooling System chapter)
  Torque Converter Cover (see Torque Converter Cover Removal in the Converter System chapter)
- Remove the three bolts of the drive pulley cover [A].
- Install the drive pulley holder [C], tightening the removed three bolts [B].

Special Tool - Drive Pulley Holder: 57001-1620

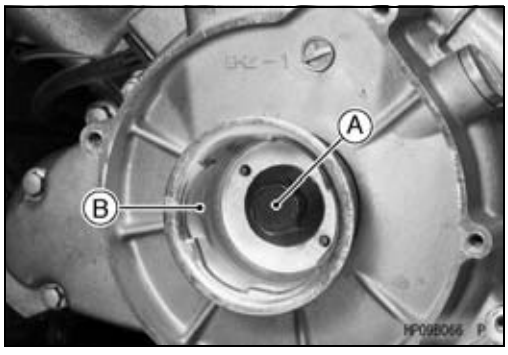

- Holding the drive pulley with the drive pulley holder, loosen the alternator rotor bolt [A].
- Remove:
  Alternator Rotor Bolt
  Pulley [B]

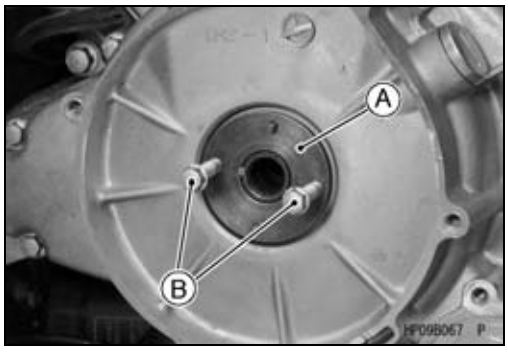

- Remove:
  Collar [A]

○Install the M6 bolts [B] to the collar, and remove it.

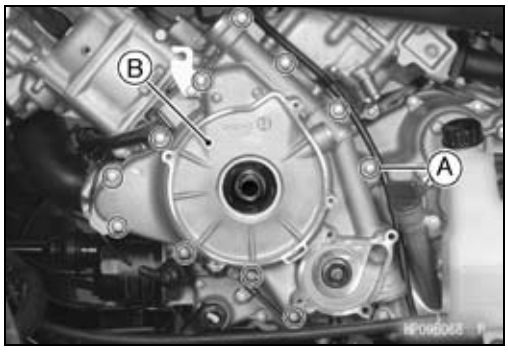

- Remove:
  Alternator and Crankshaft Sensor Lead Connectors (disconnect)
  Alternator Cover Bolts [A]
  Alternator Cover [B]

Charging System

Alternator Cover Installation

- Be sure all of the old gasket has been removed from the alternator cover and the left crankcase sealing surfaces.
- Check that the dowel pins [A] are in place, and fit a new gasket on the crankcase.
- Check that the bearing [B] is in place.

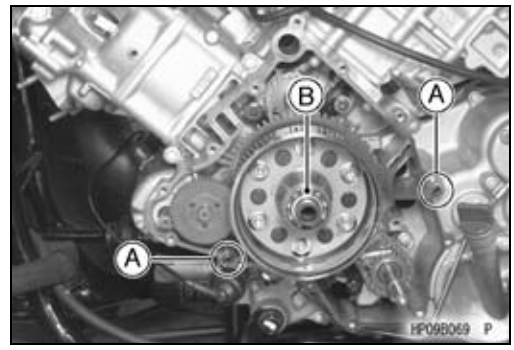

- Fit the grommets [A] into the notch in the cover.
- Grease the alternator cover oil seal.
- Tighten:

  Torque - Alternator Cover Bolts: 8.8 N·m (0.90 kgf·m, 78 in·lb)

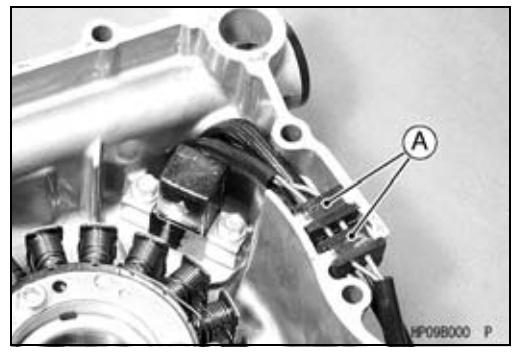

- Check that the O-ring [A] in the collar [B] is in good condition.
- Apply grease to the O-ring.
- Install the collar on the alternator cover.

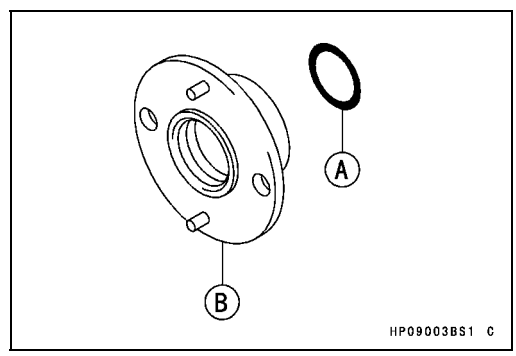

- Hold the drive pulley with the drive pulley holder [A].

  Special Tool - Drive Pulley Holder: 57001-1620

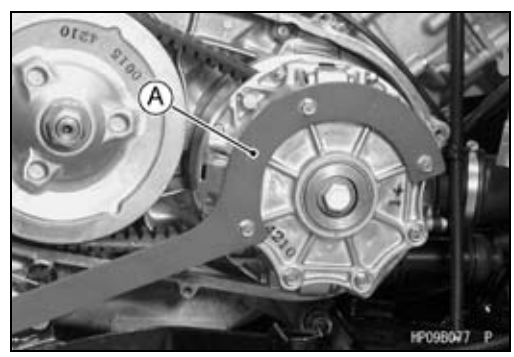

- Install the pulley [A] so that the holes of the pulley fit on the pins [B] of the collar.
- Tighten:

  Torque - Alternator Rotor Bolt [C]: 127 N·m (13 kgf·m, 94 ft·lb)

- Install the removed parts (see appropriate chapter).
- Pour:

  Coolant (see Coolant Change in the Periodic Maintenance chapter)

  Engine Oil (see Engine Oil Change in the Periodic Maintenance chapter)

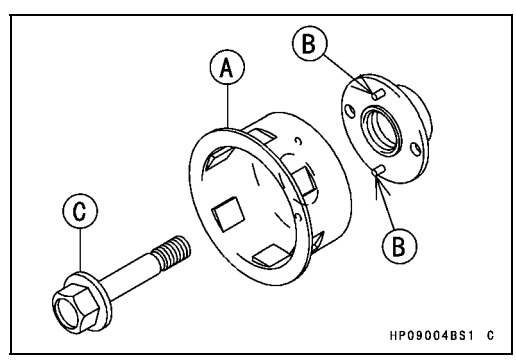

Charging System

Alternator Rotor Removal

- Remove:
  Alternator Cover (see Alternator Cover Removal)
  Ball Bearing [A]

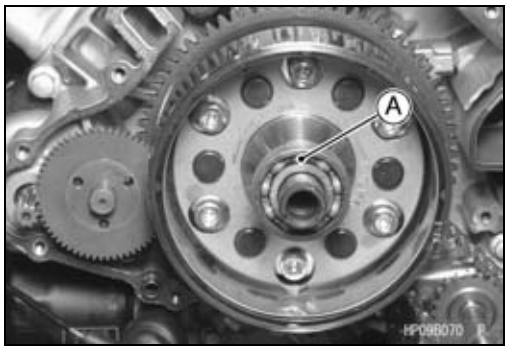

- Screw the flywheel puller [A] onto the alternator rotor.

  Special Tool - Flywheel Puller Assembly, M38 × 1.5/M35 × 1.5: 57001-1405

- Holding the flywheel puller, turn the rotor puller bolt until the alternator rotor is forced off the end of the crankshaft.

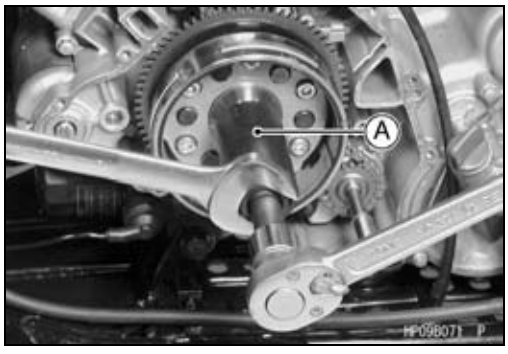

CAUTION
If the rotor is difficult to remove, turn the puller while tapping the end of the puller. Do not strike the alternator rotor. Striking the rotor can cause the magnets to lose magnetism.

Alternator Rotor Installation

- Clean [A] the inside of the rotor and the end of the crankshaft.
- Fit the rotor onto the crankshaft so that woodruff key [B] fits in the groove [C] in the hub of the rotor.

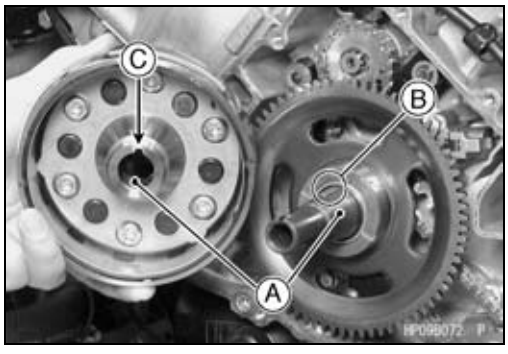

- Install the alternator rotor [A] while turning the starter clutch gear [B].
- Apply molybdenum disulfide grease to the shaft of the torque limiter [C].
- Install the torque limiter.

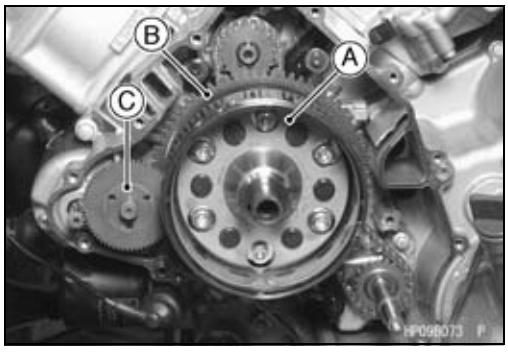

Charging System

Alternator Stator Removal

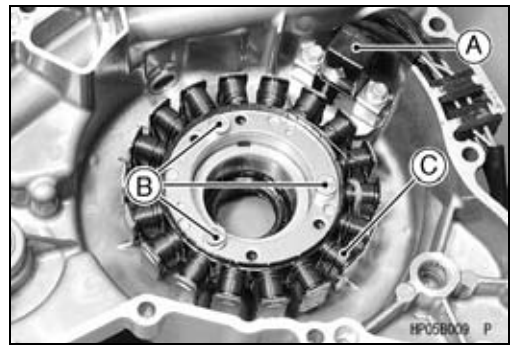

- Remove:
  Alternator Cover (see Alternator Cover Removal)
  Crankshaft Sensor [A] (see Crankshaft Sensor Removal)
  Bolts [B] and Alternator Stator [C]

Alternator Stator Installation

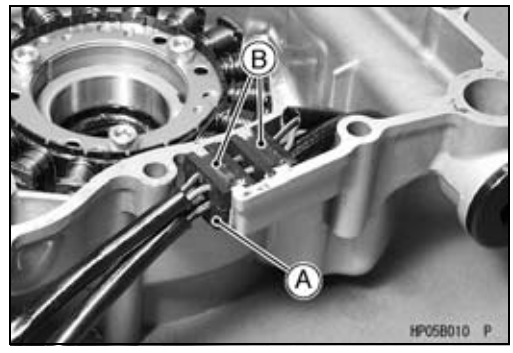

- Tighten:

  Torque - Alternator Stator Bolts: 13 N·m (1.3 kgf·m, 113 in·lb)

- Install:
  Crankshaft Sensor (see Crankshaft Sensor Installation)
- Fit the lead grommets into the notch on the alternator cover.
  Grommets [A] for Alternator Leads
  Grommets [B] for Crankshaft Sensor Leads

○Run the alternator starter leads under the crankshaft sensor leads.

○Fit the grommet for alternator leads first and then install the one of crankshaft sensor leads to the notch of the alternator cover.

Regulator/Rectifier Output Voltage Inspection

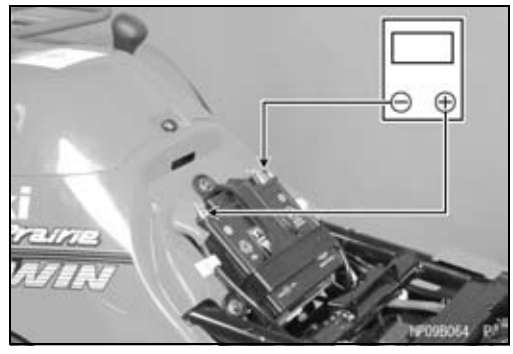

- Remove the seat (see Seat Removal in the Frame chapter).
- Check the battery condition (see Battery section).
- Warm up the engine to obtain actual alternator operating conditions.
- Check that the ignition switch is turned off, and connect a hand tester to the battery terminals.

  Special Tool - Hand Tester: 57001-1394

- Start the engine and note the voltage readings at various engine speeds with the headlight turned on and then off. The readings should show nearly battery voltage when the engine speed is low, and as the engine speed increases, the readings should also increase.

Regulator/Rectifier Output Voltage

Tester Range	Connections		Reading
	Tester (+) to	Tester (–) to	
25 V DC	Battery (+)	Battery (–)	14 ~ 15 V

- Turn off the ignition switch, and disconnect the hand tester.

★If the regulator/rectifier output voltage is between the values given in the table, the charging system is working normally.

★If the output voltage is much higher than the values specified in the table, the regulator/rectifier is defective or the regulator/rectifier leads are loose or open.

★If the battery voltage does not increase as the engine speed increases, then the regulator/rectifier is defective or the alternator output is insufficient for the loads. Check the alternator and regulator/rectifier to determine which part is defective.

Alternator Inspection

There are three types of alternator failures: short, open, or loss in rotor magnetism. A short or open in one of the coil wires will result in either a low output, or no output at all. A loss in rotor magnetism, which may be caused by dropping or hitting the alternator, by leaving it near an electromagnetic field, or just by aging, will result in low output.

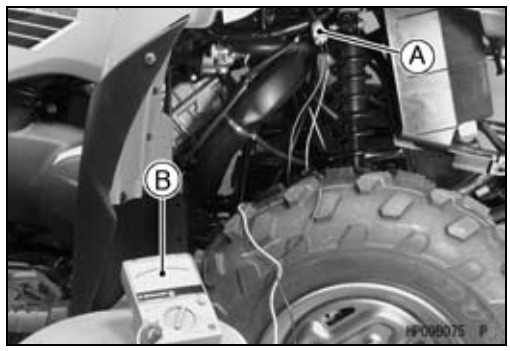

- To check the alternator output voltage, perform the following procedures.

○Disconnect the alternator connector [A].
○Connect a hand tester [B] as shown in the table.
○Start the engine.
○Run it at the rpm given in the table.
○Note the voltage readings (total 3 measurements).

Alternator Output Voltage

Tester Range	Connections		Reading
	Tester (+) to	Tester (–) to	@3 000 rpm
250 V AC	One black lead	Another black lead	38 ~ 58 V

★If the output voltage is within the values in the table, the alternator is operating correctly, and the regulator/rectifier is damaged. A much lower reading indicates that the alternator is defective.

- Check the stator coil resistance as follows:

○Stop the engine.
○Disconnect the alternator connector.
○Connect a hand tester as shown in the table.
○Note the readings (total 3 measurement).

Stator Coil Resistance **@20°C (68°F)**

Tester Range	Connections		Reading
	Tester (+) to	Tester (–) to	
× 1 Ω	One black lead	Another black lead	0.29 ~ 0.43 Ω

★If there is more resistance than shown in the table, or no reading (infinity) for any two leads, the stator has an open and must be replaced. Much less resistance means the stator is shorted and must be replaced.

- Using the highest resistance range of the hand tester, measure the resistance between each of the black leads and chassis ground.

★Any reading less than infinity (∞) indicates a short, necessitating stator replacement.

★If the stator coils have normal resistance, but the voltage check shows the alternator to be defective; then the rotor magnetism has probably weakened, and the rotor must be replaced.

Special Tool - Hand Tester: 57001-1394

Charging System

Regulator/Rectifier Inspection

- Remove:
  Connectors [A] (disconnect)
  Bolts [B] and Regulator/Rectifier [C]

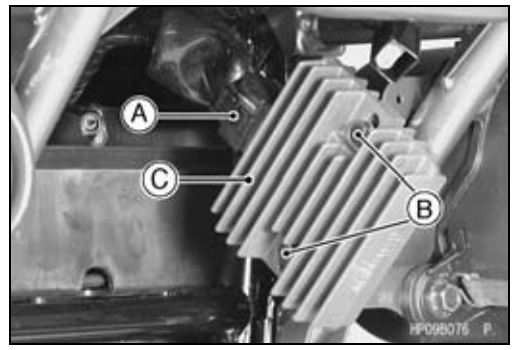

Rectifier Circuit Check

- Check conductivity of the following pair of terminals.

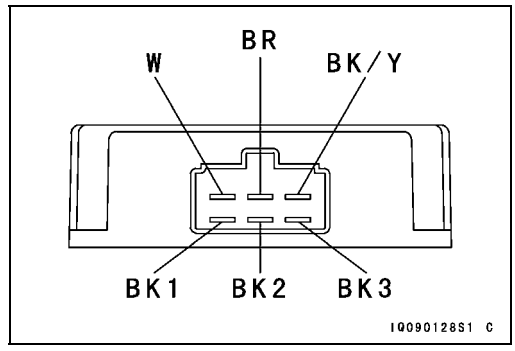

Rectifier Circuit Inspection

Tester connection	W-BK1,	W-BK2,	W-BK3,
	BK/Y-BK1,	BK/Y-BK2,	BK/Y-BK3,

★The resistance should be low in one direction and more than ten times as much in the other direction. If any two leads are low or high in both directions, the rectifier is defective and must be replaced.

NOTE

○*The actual meter reading varies with the meter and the individual rectifier. Generally speaking the lower reading should be from zero to one half of the scale.*

Regulator Circuit Check

To test the regulator out of circuit, use three 12 V batteries and a test light (12 V 3 ~ 6 W bulb in a socket with leads).

CAUTION

The test light works as an indicator and also a current limiter to protect the regulator/rectifier from excessive current. Do not use an ammeter instead of a test light.

- Check to be sure the rectifier circuit is correct before continuing.

Regulator Circuit Test-1st Step

- Connect the test light [A] and the 12 V battery [B] to the regulator/rectifier [C] as shown.
- Check Y1, Y2, and Y3 terminal respectively.

★If the test light turns on, the regulator/rectifier is defective.
★If the test light does not turn on, continue the test.

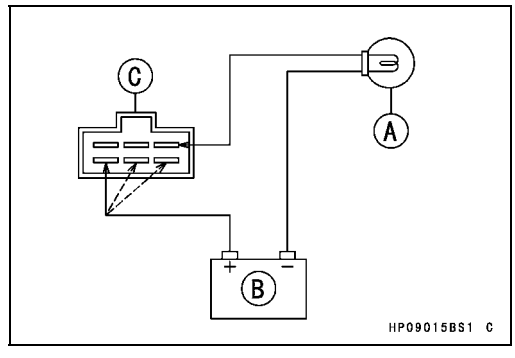

Regulator Circuit Test-2nd Step

- Connect the test light and a 12 V battery in the same manner as specified in the "Regulator Circuit Test-1st Step".
- Apply 12 V to the BR terminal.
- Check Y1, Y2, and Y3 terminals.

★If the test light turns on, the regulator/rectifier is defective.
★If the test light does not turn on, continue the test.

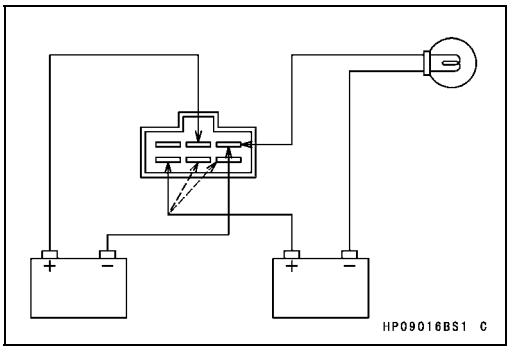

Regulator Circuit Test-3rd Step

- Connect the test light and a 12 V battery in the same manner as specified in the "Regulator Circuit Test-1st Step".
- Momentarily apply 24 V to the BR terminal by adding a 12 V battery.
- Check Y1, Y2, and Y3 terminals.

CAUTION
Do not apply more than 24 V to the regulator/rectifier. Do not leave the 24 V applied for more than a few seconds, or the unit will be damaged.

★If the test light did not light when the 24 V was applied momentarily to the BR terminal, the regulator/rectifier is defective.
★If the regulator/rectifier passes all of the tests described, it may still be defective. If the charging system still does not work properly after checking all of the components and the battery, test the regulator/rectifier by replacing it with a known good unit.

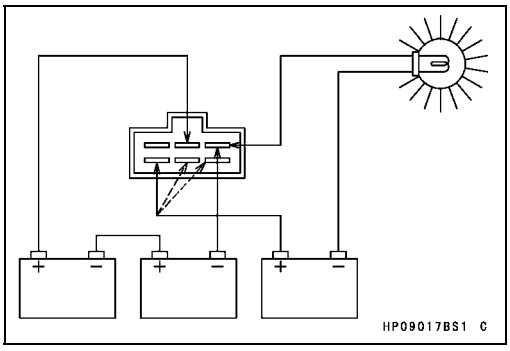

Regulator Installation

- Tighten:

Torque - Regulator/Rectifier Mounting Bolts: 8.8 N·m (0.90 kgf·m, 78 in·lb)

Charging System

Charging System Circuit

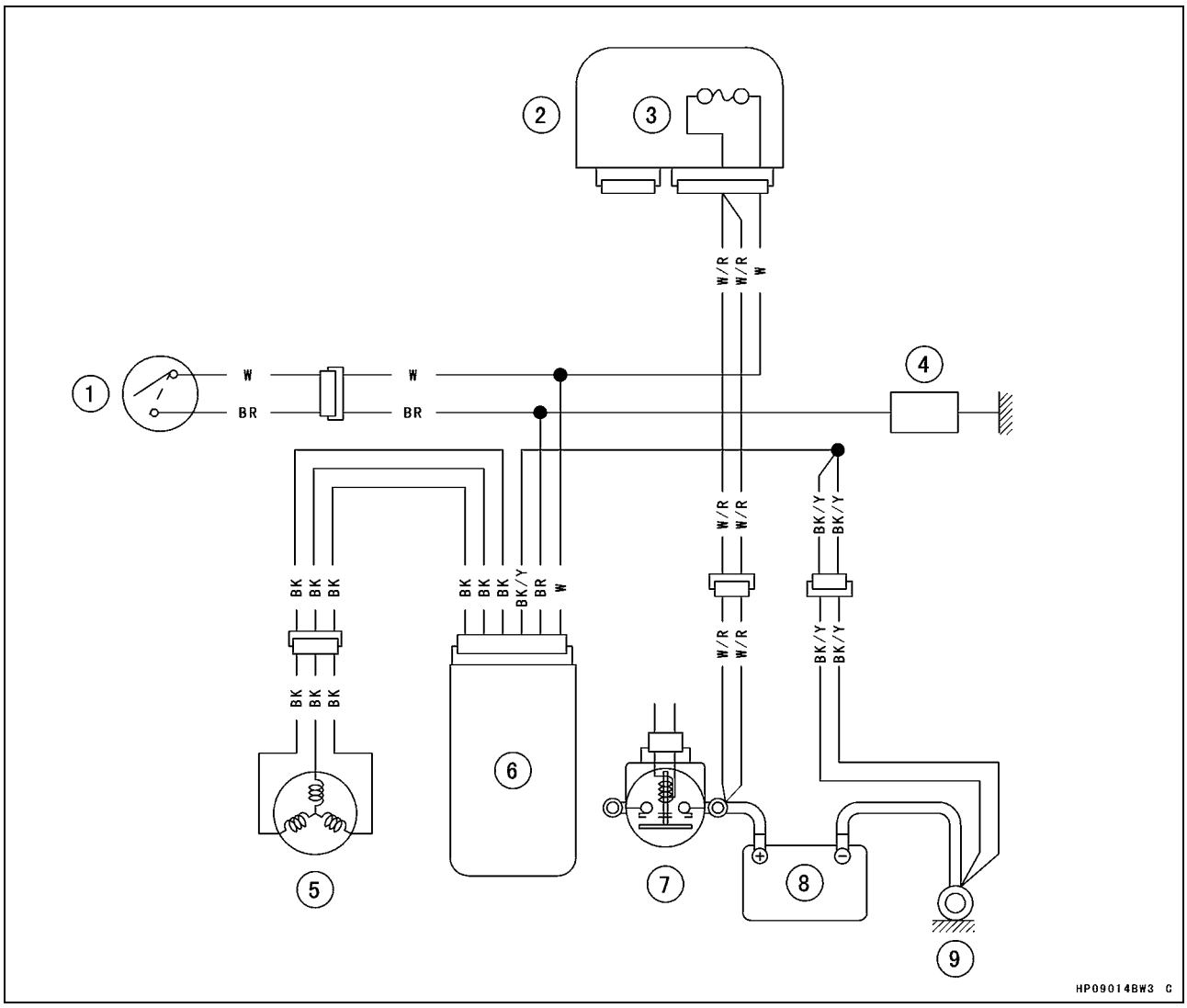

1. Ignition Switch
2. Fuse Box
3. Main Fuse 30 A
4. Load
5. Alternator
6. Regulator/rectifier
7. Starter Relay
8. Battery 12 V12 Ah
9. Engine Ground Terminal

Ignition System

⚠ WARNING

The ignition system produces extremely high voltage.
Do not touch the spark plug, ignition coil, or spark plug lead while the engine is running, or you could receive a severe electrical shock.

CAUTION

Do not disconnect the battery cables or any other electrical connections when the ignition switch is on, or while the engine is running. This is to prevent igniter damage.
Do not install the battery backwards. The negative side is grounded. This is to prevent damage to the diodes and igniter.
Use the standard regulator/rectifier, or the igniter will be damaged.

Spark Plug Removal

Front Side

- Remove:
  Spark Plug Cap [A]
- Using a spark plug wrench, remove the spark plug [B].

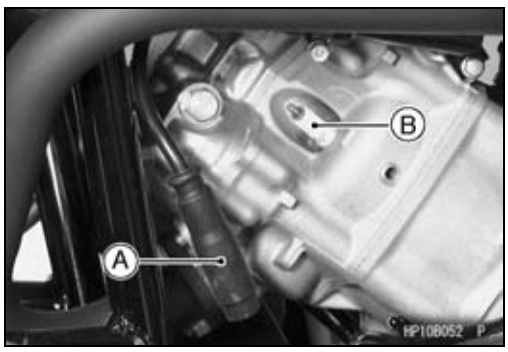

Rear Side

- Remove:
  Right Side Cover (see Right Side Cover Removal in the Frame chapter)
  Clamp Screws [A] and Clamps
  Rubber Air Duct [B]

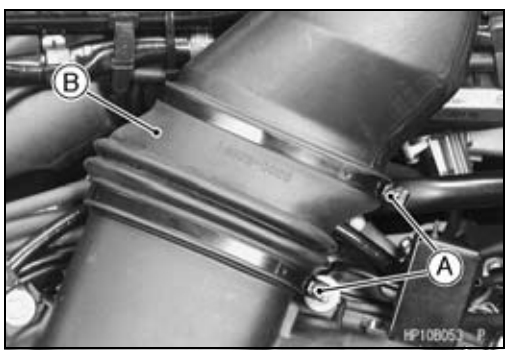

- Remove:
  Spark Plug Cap [A]
- Using a spark plug wrench [B], remove the spark plug.

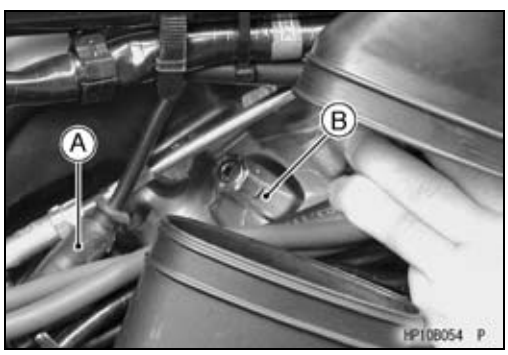

Spark Plug Installation

- Tighten:

  Torque - Spark Plugs: 13 N·m (1.3 kgf·m, 113 in·lb)
- Fit the spark plug caps securely.
- Pull up the spark pug caps lightly to make sure of the installation of the spark plug caps.

Ignition System

Spark Plug Cleaning/Inspection

- Refer to the Spark Plug Cleaning/Inspection in the Periodic Maintenance chapter.

Spark Plug Gap Inspection

- Refer to the Spark Plug Gap Inspection in the Periodic Maintenance chapter.

Ignition Coil Removal

Front Side

- Remove:
  Spark Plug Cap [A]
  Primary Lead Connectors [B]
  Bolt [C]
  Ignition Coil [D]

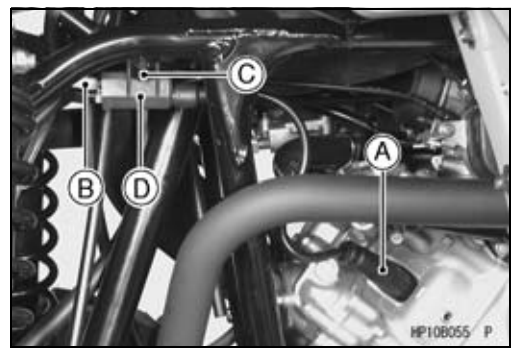

Rear Side

- Remove:
  Right Side Cover (see Right Side Cover Removal in the Frame chapter)
  Rubber Air Duct (see Spark Plug Removal)
  Spark Plug Cap [A]

- Remove:
  Primary Lead Connectors [A]
  Bolt [B]
  Ignition Coil [C]

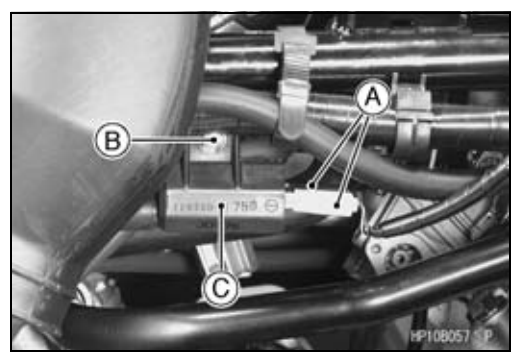

Ignition Coil Installation

- Install:
  Ignition Coil

  Torque - Ignition Coil Mounting Bolts: 6.9 N·m (0.70 kgf·m, 61 in·lb)

- Connect the primary leads to the ignition coil terminals as shown.

Front Side

G/W Lead → (+) Mark [A]
BK/Y Lead → (–) Mark

Rear Side

BL/W Lead → (+) Mark [A]
BK/Y Lead → (–) Mark

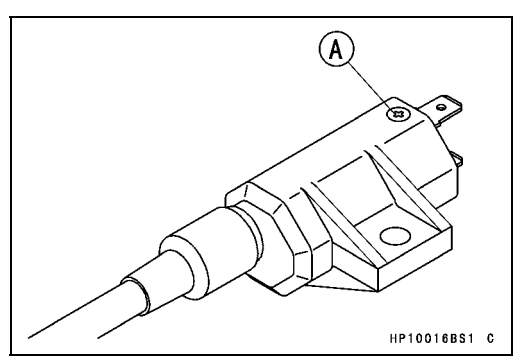

Ignition System

Ignition Coil Inspection

- Remove the ignition coil.
- Measure the arcing distance with a coil tester [A] to check the condition of the ignition coil [B].
- Connect the ignition coil (with the spark plug cap left attached at the end of the spark plug lead) to the tester in the manner prescribed by the manufacturer and measure the arcing distance.

Ignition Coil Arcing Distance
7 mm (0.28 in.) or more

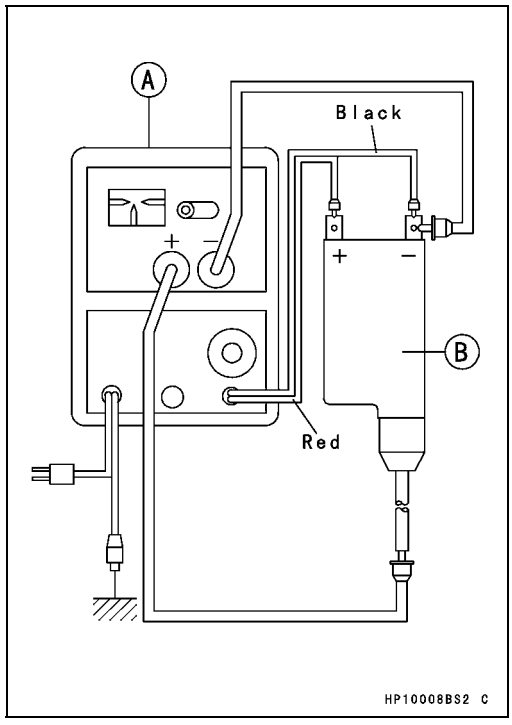

⚠ WARNING

To avoid extremely high voltage shocks, do not touch the ignition coil body or leads.

★If the distance reading is less than the specified value, the ignition coil or spark plug cap is defective.

- To determine which part is defective, measure the arcing distance again with the spark plug cap removed from the ignition coil. Remove the cap by turning it counterclockwise.

★If the arcing distance is as before, the trouble is with the ignition coil. If the arcing distance is normal, the trouble is with the spark plug cap.

★If a coil tester is not available, the coil can be checked for a broken or badly shorted winding with a hand tester.

Special Tool - Hand Tester: 57001-1394

NOTE

○*The hand tester cannot detect layer shorts and shorts resulting from insulation breakdown under high voltage.*

- Measure the primary winding resistance [A] as follows:

○Connect the tester between the coil terminals.
○Set the tester to the × 1 Ω range.

- Measure the secondary winding resistance [B] as follows:

○Remove the plug cap by turning it counterclockwise.
○Connect the tester between the spark plug lead and terminal.
○Set the tester to the × 1 kΩ range.

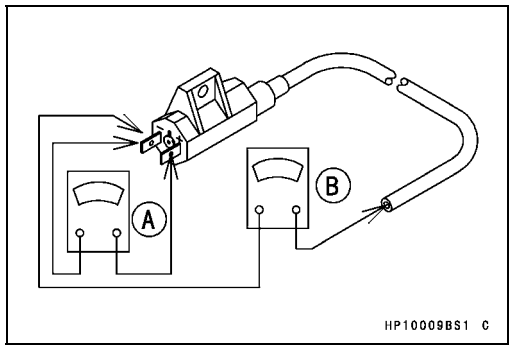

Ignition Coil Winding Resistance
Primary Windings: 0.09 ~ 0.13 Ω
Secondary Windings: 3.8 ~ 5.8 kΩ

★If the hand tester does not read as specified, replace the coil.

○To install the plug cap, turn it clockwise.

Ignition System

Ignition Coil Primary Peak Voltage Inspection

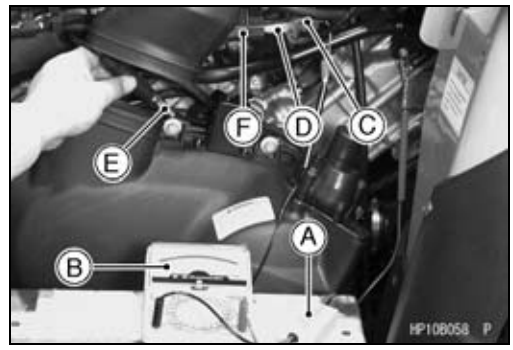

NOTE

○*Be sure the battery is fully charged.*

- Remove the spark plug cap (see Spark Plug Removal), but do not remove the spark plug.
- Measure the primary peak voltage as follows.

○Connect a commercially peak voltage adapter [A] to the hand tester [B] (250 V DC range). Install the needle adapter [C] on the peak voltage adapter leads.

Special Tools - Hand Tester: 57001-1394
Needle Adapter Set: 57001-1457
Peak Voltage Adapter: 57001-1415
Type: KEK-54-9-B

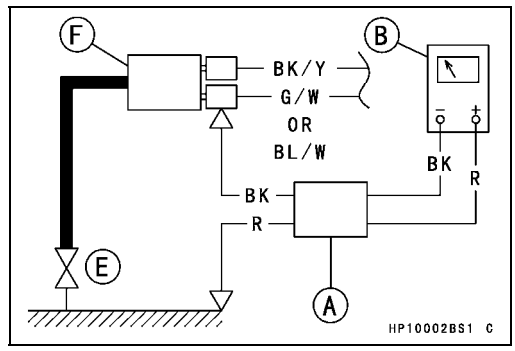

○Insert the needle adapter into the terminal of the G/W (front) or BL/W (rear) primary lead [D].

○Install a new spark plug [E] into the spark plug cap, and ground it to the engine.
[F] Ignition Coil

⚠ WARNING

To avoid extremely high voltage shocks, do not touch the spark plugs or tester connections.

- Turn the ignition switch ON, rotate the engine for 4 ~ 5 seconds with the transmission in neutral to measure the primary peak voltage.
- Repeat the measurements 5 times for one ignition coil.

Ignition Coil Primary Peak Voltage
Standard: 120 V or more

- Repeat the test for the other ignition coil.

★If the reading is less than the specified value, check the following.
Ignition Coils (see Ignition Coil Inspection)
Crankshaft Sensor (see Crankshaft Sensor Inspection)

★If the ignition coils and crankshaft sensor are normal, see the Ignition System Troubleshooting chart on page 17-47.

Crankshaft Sensor Removal

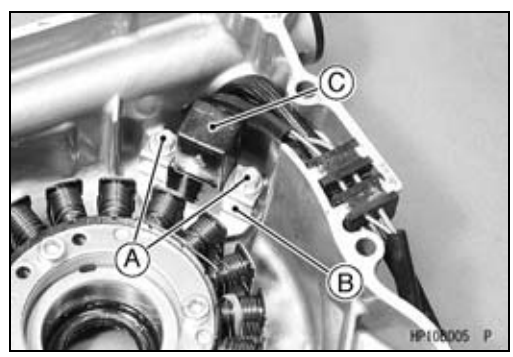

- Remove:
  Alternator Cover (see Alternator Cover Removal)
  Crankshaft Sensor Mounting Bolts [A]
  Plate [B]
  Crankshaft Sensor [C]

Crankshaft Sensor Installation

- Install:
  Stator Coil Leads [A]
  Plate [B]
  Crankshaft Sensor [C]
- Tighten:

Torque - Crankshaft Sensor Mounting Bolts: 5.9 N·m (0.60 kgf·m, 52 in·lb)

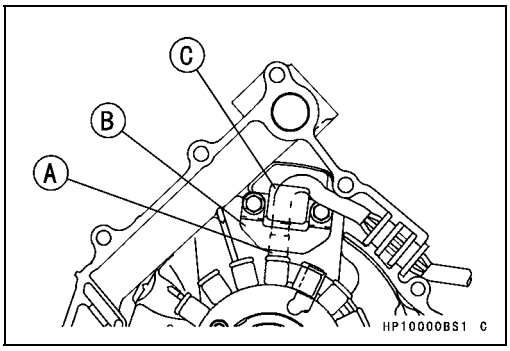

- Fit the lead grommets into the notch on the alternator cover.
  Grommets [A] for Alternator Leads
  Grommets [B] for Crankshaft Sensor Leads

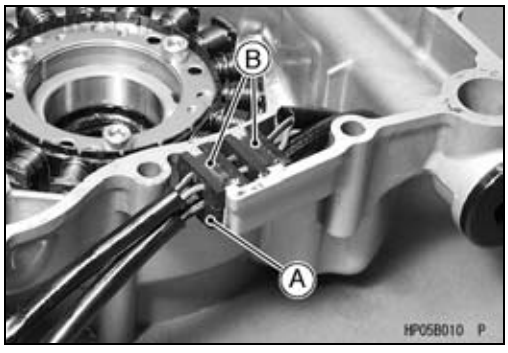

Crankshaft Sensor Inspection

- Remove the seat (see Seat Removal in the Frame chapter).
- Disconnect the crankshaft sensor lead connector [A].
- Measure the crankshaft sensor resistance.

○Connect a hand tester between the BK/W lead and the BL lead.
○Set the tester to the × 100 Ω range.

Crankshaft Sensor Resistance
423 ~ 517 Ω

★If the tester does not read as specified, replace the crankshaft sensor.

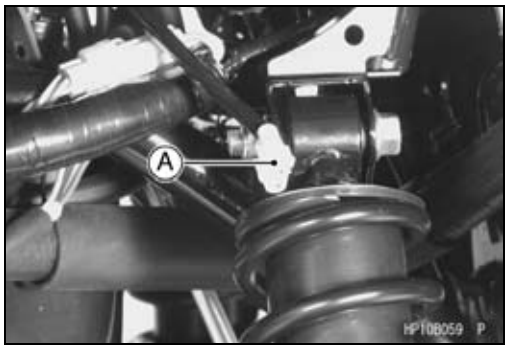

Ignition System

Crankshaft Sensor Peak Voltage Inspection

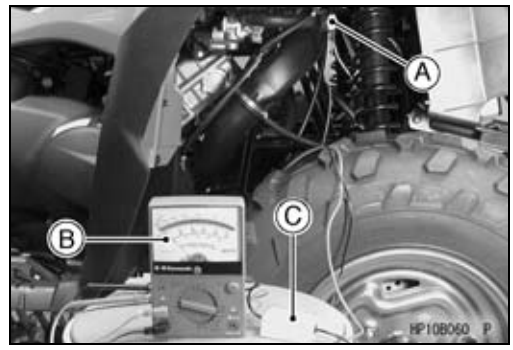

NOTE

○*Be sure the battery is fully charged.*

- Remove the spark plug caps, but do not remove the spark plugs.
- Disconnect:
  Crankshaft Sensor Lead Connector [A]
- Set the hand tester [B] to the 10 V DC range.
- Connect the peak voltage adapter [C] to the hand tester and crankshaft sensor leads in the connector.

Special Tools - Hand Tester: 57001-1394
Peak Voltage Adapter: 57001-1415
Type: KEK-54-9-B

Connections:

Crankshaft Sensor Lead		Adapter		Hand Tester
Black/White	←	Red	→	(+)
Blue	←	Black	→	(–)

- Turn the ignition switch on, and rotate the engine for 4 ~ 5 seconds with the transmission gear in neutral to measure the crankshaft sensor peak voltage.
- Repeat the measurement 5 or more times.

Crankshaft Sensor Peak Voltage
Standard: 2 V or more

★If the peak voltage is lower than the standard, inspect the crankshaft sensor.

Alternator Rotor Inspection

- Check the timing projection [A] for damage such as chipping or grooving.

★If the timing projection on the rotor is visibly damaged, replace the alternator rotor.

Ignition Timing Test

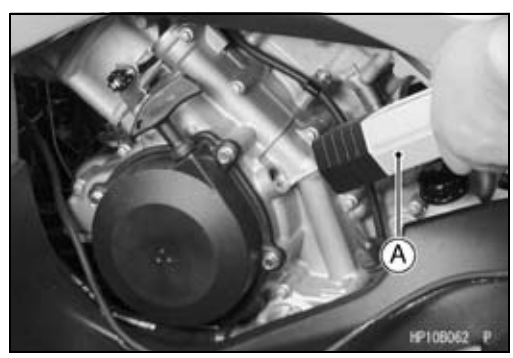

- Remove the ignition timing inspection plug.
- Attach a timing light [A] and a tachometer in the manner prescribed by the manufacturer.

Special Tool - Timing Light: 57001-1241

- Start the engine and aim the timing light at the timing mark on the alternator rotor.
- Run the engine at the speeds specified and note the alignment of the timing marks.

[A] F or R mark

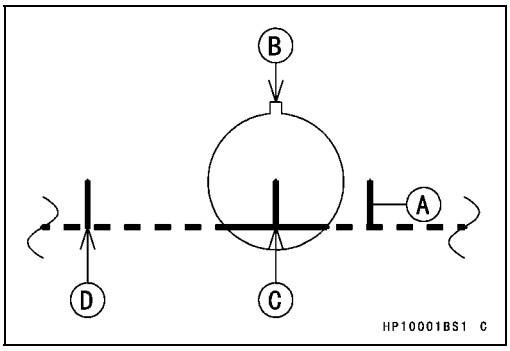

Ignition Timing

Engine speed r/min (rpm)	Slot [B] aligned with:
1 100 and below	Advanced mark [C] on alternator rotor
5 000 and above	Advanced mark [D] on alternator rotor

NOTE

○*Do not mix up the timing marks with mark [A].*

★If the ignition timing is incorrect, replace the igniter and the crankshaft sensor.

Vehicle-down Sensor Outline

This sensor has a weight [A] with two magnets inside, and sends a signal to the igniter. But when the vehicle banks 60 ~ 70° or more to either side (in fact falls down), the weight turns and shuts off the signal in the vehicle-down sensor circuit. The igniter senses this change, and stops the ignition system.

Hall IC [B]

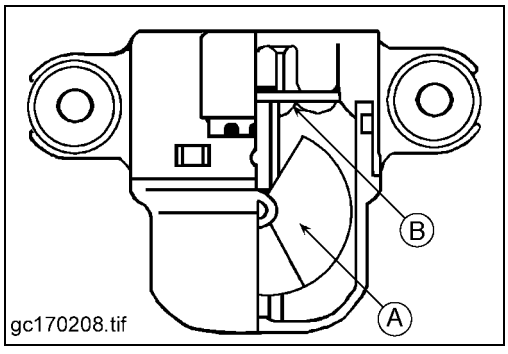

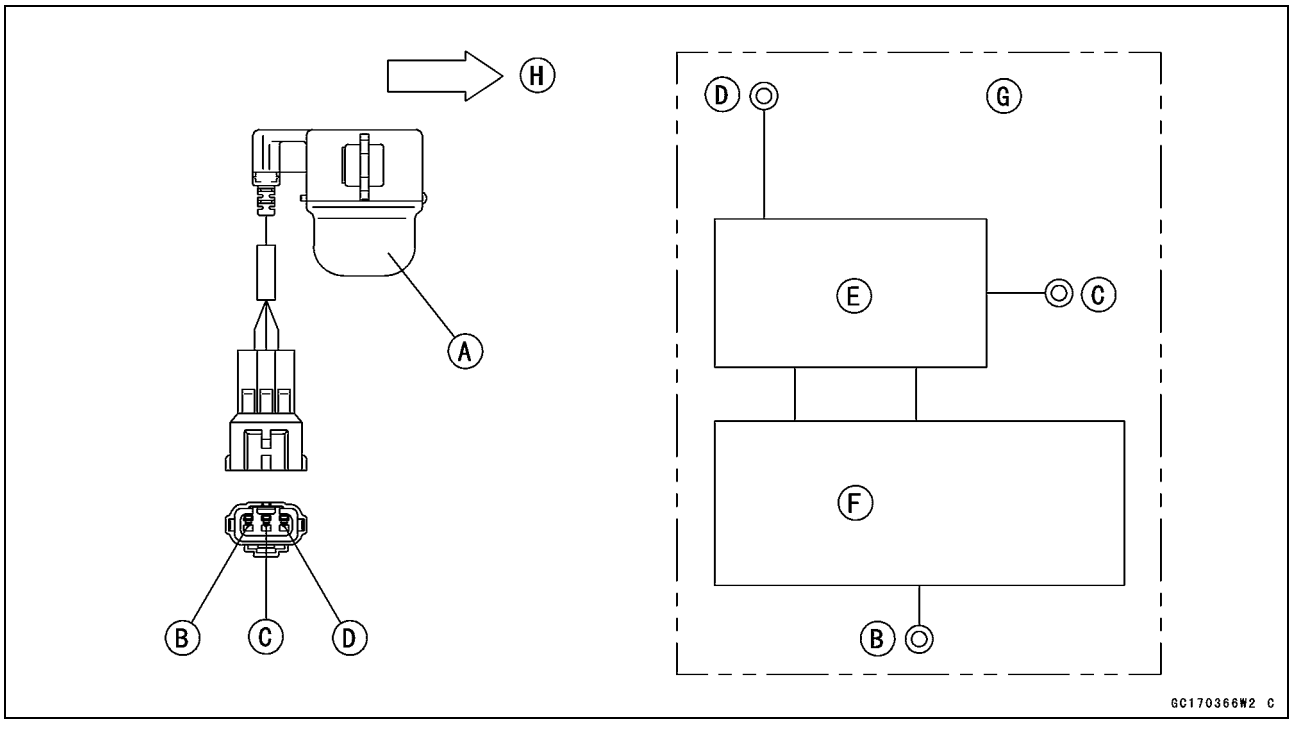

Vehicle-down Sensor [A]
Ground Terminal [B] BK/Y
Output Terminal [C] Y/G
Power Source Terminal [D] BR
Constant Voltage Circuit [E]
Hall IC (Integrated Circuit) [F]
Vehicle-down Sensor Circuit [G]
Front [H]

Ignition System

Vehicle-down Sensor Removal

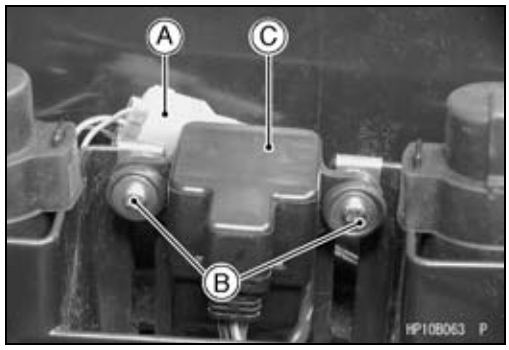

CAUTION

Never drop the vehicle-down sensor, especially on a hard surface. Shock to the sensor can damage it.

- Remove:
  Rear Fender (see Rear Fender Removal in the Frame chapter)
  Vehicle-down Sensor Lead Connector [A]
  Screws [B]
  Vehicle-down Sensor [C]

Vehicle-down Sensor Installation

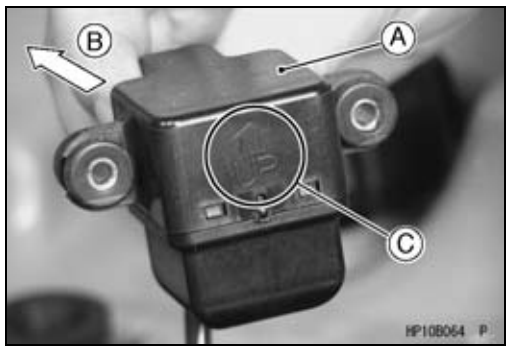

- Install the vehicle-down sensor [A] so that the sensor lead base faces forward [B], and the arrow mark [C] on the sensor points upward.
- Tighten the screws securely.

⚠ WARNING

Incorrect installation of the vehicle-down sensor could cause sudden loss of engine power. The rider could lose balance during certain riding situations, like leaning over in a turn, with the potential for an accident resulting in injury or death. Ensure that the down sensor is held in place by the sensor brackets.

Vehicle-down Sensor Inspection

NOTE

○*Be sure the battery is fully charged.*

Vehicle-down Sensor Power Source Voltage

- Remove:
  Seat (see Seat Removal in the Frame chapter)
  Vehicle-down Sensor Lead Connector

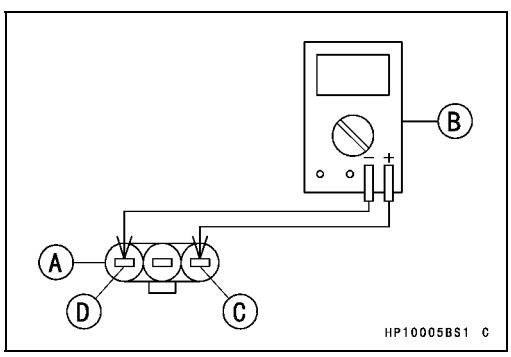

- Connect:
  Vehicle-down Sensor Lead Connector [A] (harness side)
  Digital Volt Meter [B]

I. Connections to Connector (12 V circuit)
  Meter (+) → Connector BR Lead [C]
  Meter (–) → Connector BK/Y Lead [D]

- Turn the ignition switch ON, and measure the power source voltage.

Vehicle-down Sensor Power Source Voltage
Standard: Battery Voltage

- Turn the ignition switch OFF.

★If there is no battery voltage, check the following:
  Main Fuse 30 A
  Ignition Switch
  Wiring for Vehicle-down Sensor Power Source

II. Connections to Connector (5 V circuit)

Vehicle-down Sensor Lead Connector [A] (harness side)
Digital Volt Meter [B]
Meter (+) → Connector Y/G Lead [E]
Meter (–) → Connector BK/Y Lead [D]

- Turn the ignition switch ON, and measure the power source voltage.

Vehicle-down Sensor Power Source Voltage
Standard: about 5 V

- Turn the ignition switch OFF.

★If there is no standard voltage, check the following:
Igniter
Wiring for Vehicle-down Sensor Power Source

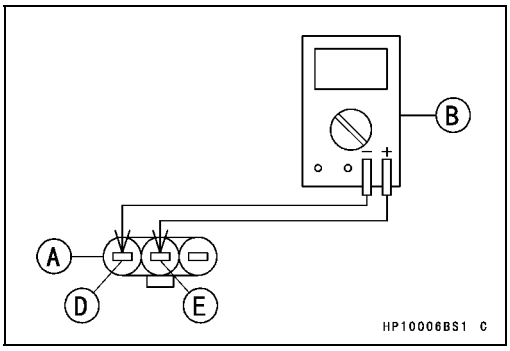

Vehicle-down Sensor Output Voltage

- Remove the vehicle-down sensor (see Vehicle-down Sensor Removal).
- Connect the vehicle-down sensor [A] to the connector of the harness.
- Hold the sensor almost vertical [B] with the arrow mark pointed up.
- Connect:
  Vehicle-down Sensor Lead Connector [C]
  Digital Volt Meter [D]
  Needle Adapters [E]

Special Tool - Needle Adapter Set: 57001-1457

Connection to Connector (5 V circuit)

Meter (+) → Connector Y/G Lead [F]
Meter (–) → Connector BK/Y Lead [G]

- Turn the ignition switch ON, and measure the output voltage with the connector joined.

Vehicle-down Sensor Power Output Voltage
Standard: 0.4 ~ 1.4 V (with sensor arrow mark pointed up)

- Tilt the sensor 60 ~ 70° or more [H] right or left, and measure the output voltage.

○The time lag is from 0.5 to 1 second.

Vehicle-down Sensor Power Output Voltage
Standard: 3.7 ~ 4.4 V (with sensor tilted 60 ~ 70° or more, right or left)

★If the output voltage is out of the specified, replace the vehicle-down sensor.

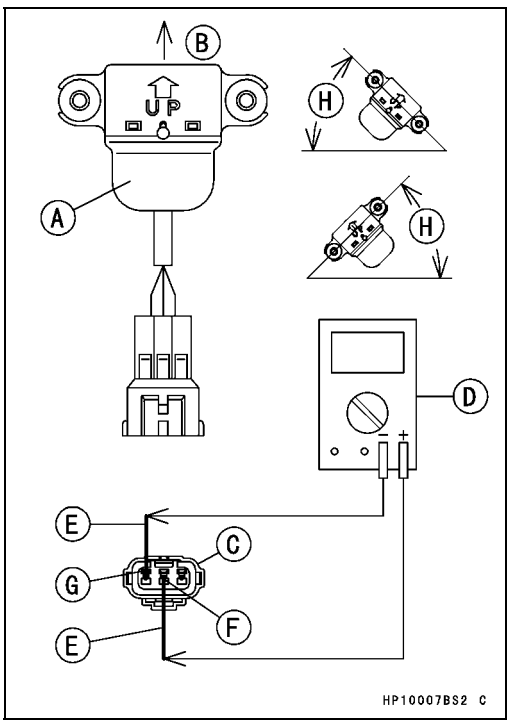

Ignition System

Ignition System Troubleshooting

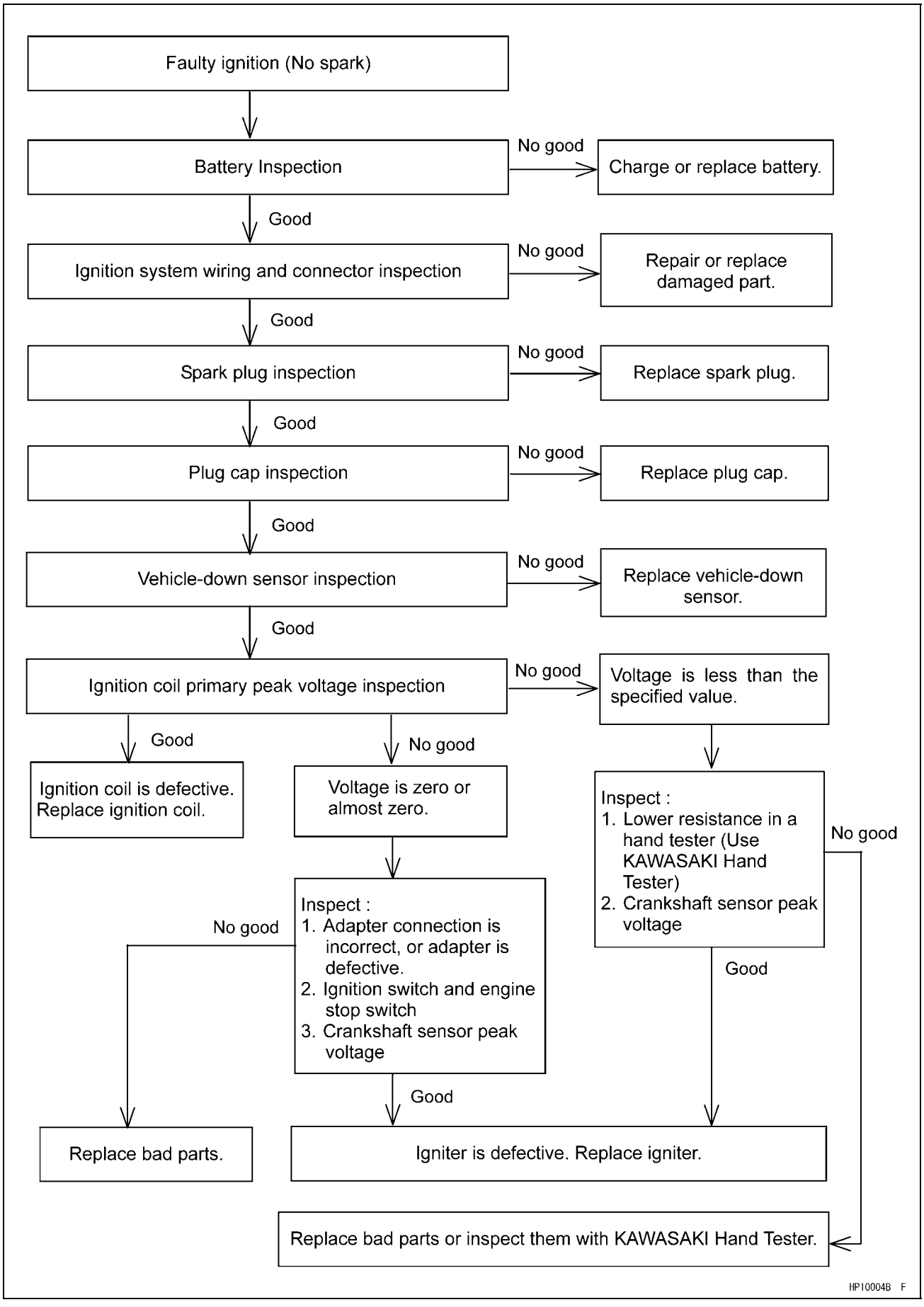

Ignition System

Ignition System Circuit

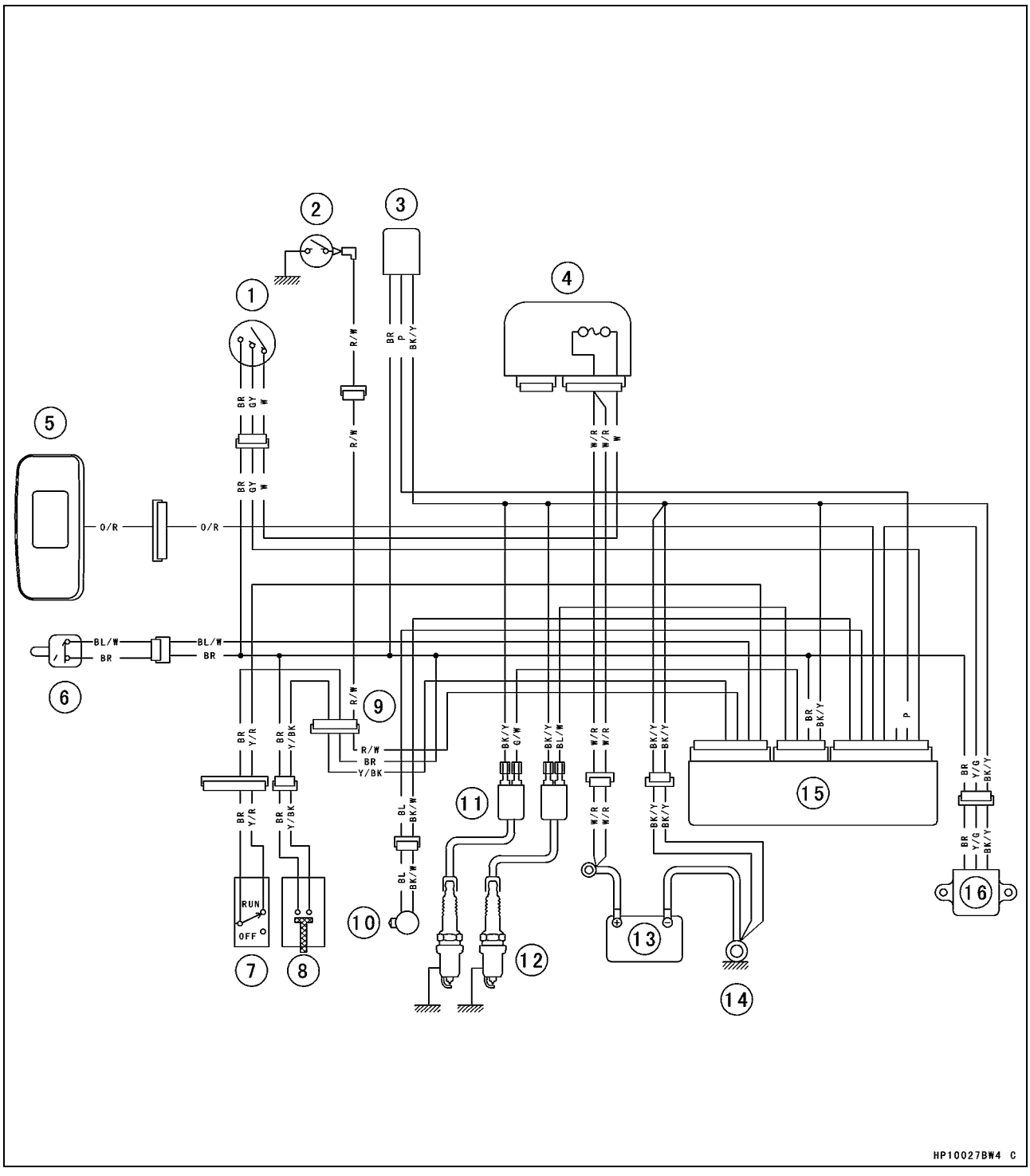

1. Ignition Switch
2. Reverse Switch
3. Speed Sensor
4. Fuse Box (Main Fuse 30 A)
5. Multifunction Meter
6. Belt Failure Detection Switch
7. Engine Stop Switch
8. Reverse Power Assist Switch (Override)
9. Reset Connector
10. Crankshaft Sensor
11. Ignition Coils
12. Spark Plugs
13. Battery
14. Engine Ground Terminal
15. Igniter
16. Vehicle-down Sensor

Electric Starter System

Starter Motor Removal

- Remove:
  Air Intake Rubber Duct [A]

- Remove:
  Joint Duct [A] and Collars

- Remove:
  Starter Motor Cable [A]
  Starter Motor Mounting Bolts [B]
  Clamp [C]
  Starter Motor [D]

CAUTION
Do not tap the end of the starter motor shaft or the motor may be damaged.

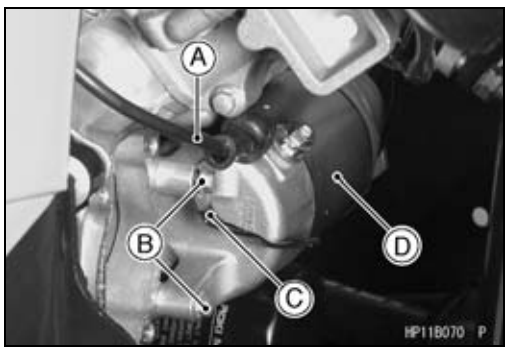

Starter Motor Installation

- When installing the starter motor, clean the starter motor lugs [A] and crankcase [B] where the starter motor is grounded.

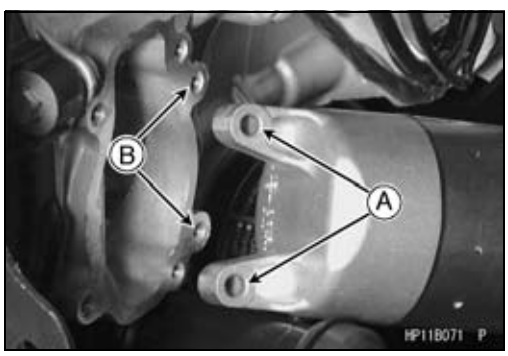

★If the O-ring [A] shows wear or damage, or if it is hardened, replace it with a new one.

- Apply a small amount of engine oil to the O-ring.

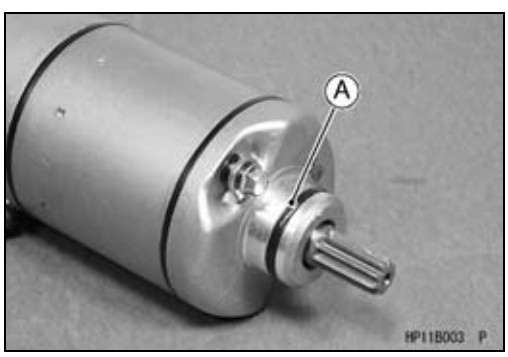

- Install:
  Starter Motor [A]
  Clamp [B] (as shown)
  Starter Motor Cable [C]
- Tighten:

  Torque - Starter Motor Mounting Bolts: 8.8 N·m (0.90 kgf·m, 78 in·lb)
  Starter Motor Cable Mounting Nut: 6.9 N·m (0.70 kgf·m, 61 in·lb)
  Starter Motor Cable Mounting Nut: 4.9 N·m (0.50 kgf·m, 43 in·lb) (KVF750-A1, B1, A6F, B6F, C6F)

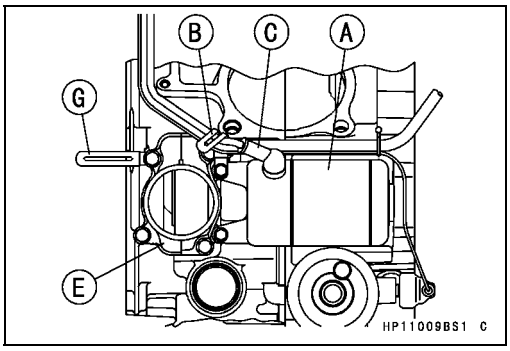

- Apply grease to the O-ring [D] in the joint duct [E].
- Install:
  Joint Duct and Collars [F]
  Clamp [G] (as shown)
- Tighten:

  Torque - Joint Duct Bolts [H]: 8.8 N·m (0.90 kgf·m, 78 in·lb)

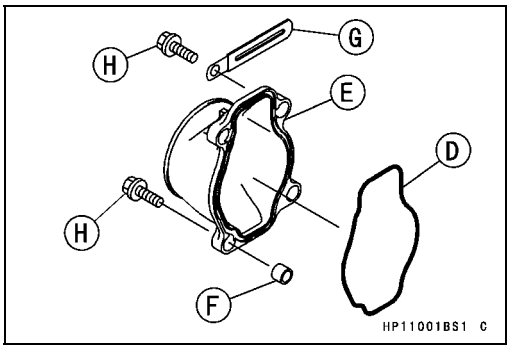

Starter Motor Disassembly

- Remove:
  Starter Motor Bolts [A], Washers and O-rings
  Left End Cover [B]
  Right End Cover [C]
  Yoke [D]

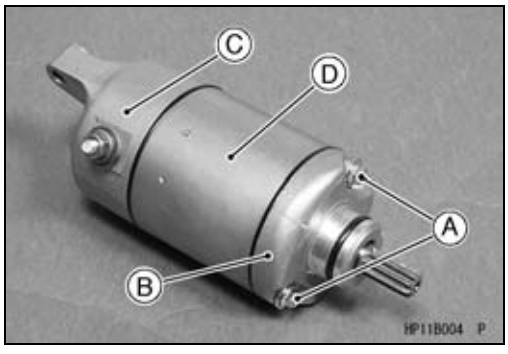

- To remove the brush plate assembly [A], remove the terminal nut [B].

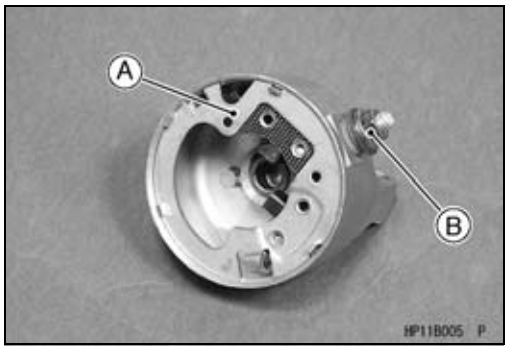

- Hold the brush spring [A] with needle nose pliers, and pull the brush [B] off the holder.

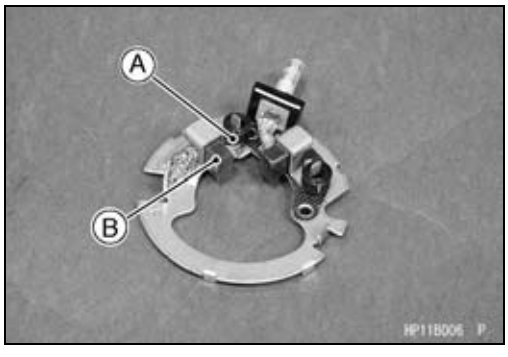

Electric Starter System

Starter Motor Assembly

- Replace the O-rings.
- Install the brush plate assembly to the right end cover so that the projection [A] on the brush plate fits into the groove on the right end cover.
- Install the O-ring, insulators [B], and washer [C] in that order on the terminal bolt.
- Tighten:

  Torque - Starter Motor Terminal Nut: 6.9 N·m (0.70 kgf·m, 61 in·lb)

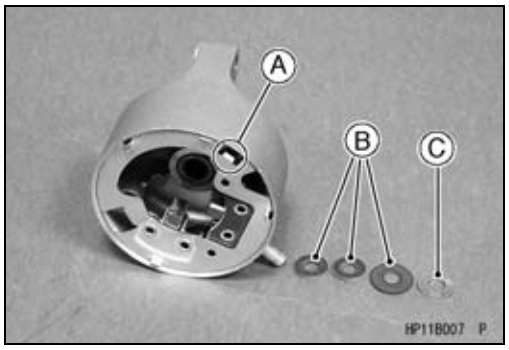

- Install the washers [A].
- Install the armature [B] between the brushes.

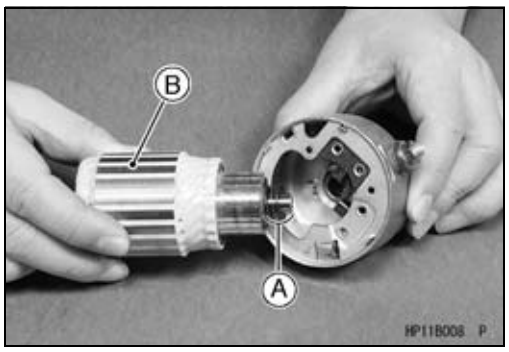

- Install the yoke [A] onto the right end cover [B] aligning the marks [C] on the yoke and right end cover.

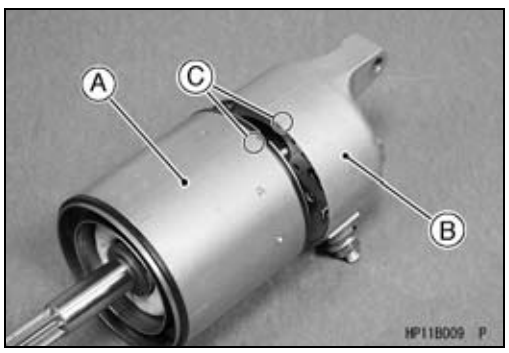

- Install the washers [A].

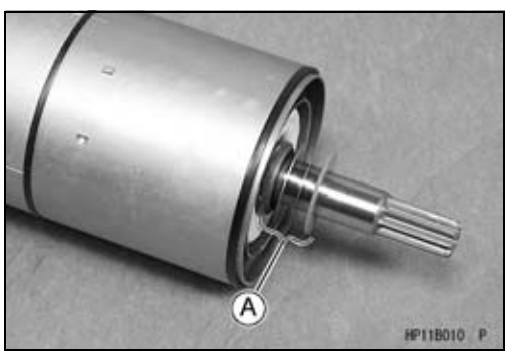

- Install the plate [A] on the left end cover [B].

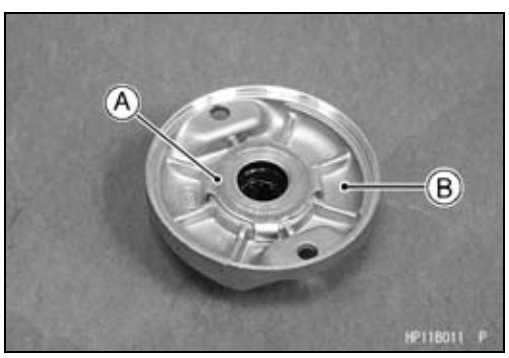

- Align the mark [A] on the left end cover with the mark [B] on the yoke.
- Tighten:

Torque - Starter Motor Bolts: 4.9 N·m (0.50 kgf·m, 43 in·lb)

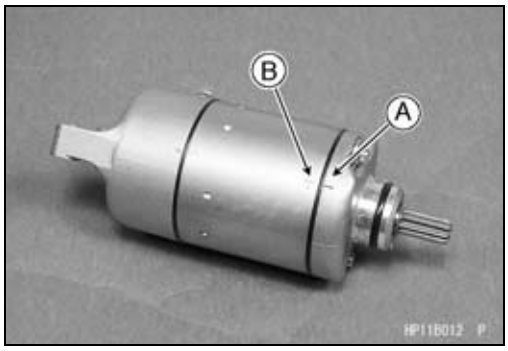

Commutator Cleaning/Inspection

- Smooth the commutator surface [A] if necessary with fine emery cloth [B], and clean out the grooves.

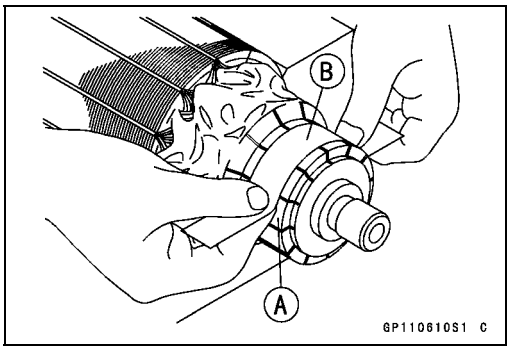

- Measure the diameter [A] of the commutator.

★Replace the starter motor with a new one if the commutator diameter is less than the service limit.

Commutator Diameter

Standard:	**28 mm (1.10 in.)**
Service Limit:	**27 mm (1.06 in.)**

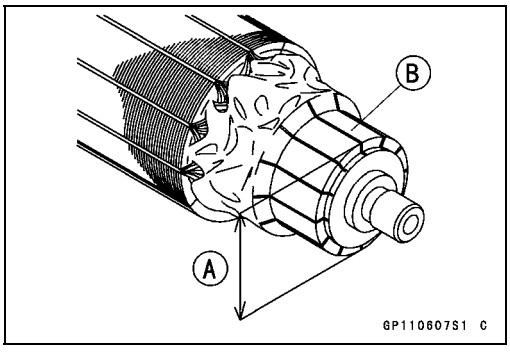

Armature Inspection

- Using the × 1 Ω range, measure the resistance between any two commutator segments [A].

★If there is a high resistance or no reading (∞) between any two segments, a winding is open. Replace the starter motor.

- Using the highest range, measure the resistance between the segments and the shaft [B].
- If there is any reading at all, the armature has a short. Replace the starter motor.

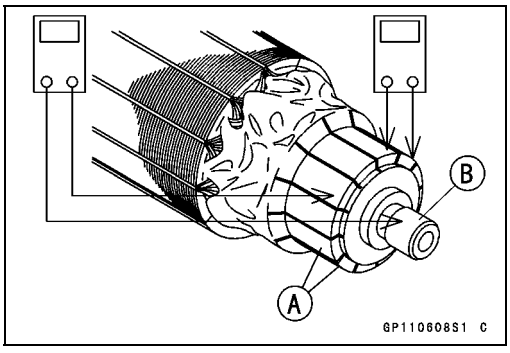

NOTE

○*Even if the foregoing checks show the armature to be good, it may be defective in some manner not readily detectable with the hand tester. If all other starter motor and starter motor circuit components check good, but the starter motor still does not turn over or only turns over weakly, replace the starter motor with a new one.*

Electric Starter System

Starter Motor Brush Length Mesurement

- Measure the overall length [A] of each brush.

Starter Motor Brush Length
Standard: 12.5 mm (0.49 in.)
Service Limit: 5 mm (0.20 in.)

★If any is worn down to the service limit, replace the brush plate assembly.

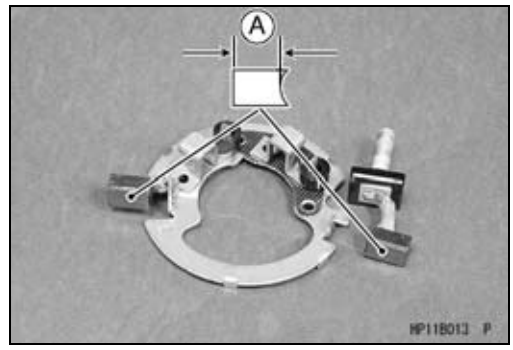

Brush Assembly Inspection

- Using the × 1 Ω range, measure the resistance as shown.
  [A] Terminal Bolt and Positive Brush
  [B] Brush Plate and Negative Brush

★If there is not close to zero ohms, the brush lead has an open. Replace the brush plate assembly.

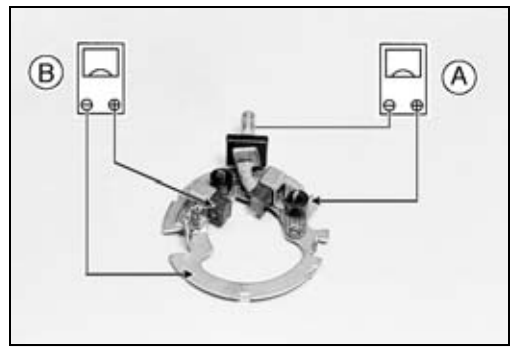

Brush Plate and Terminal Bolt Inspection

- Using the highest range, measure the resistance as follows:
  [A] Terminal Bolt and Right - Hand End Cover
  [B] Terminal Bolt and Brush Plate

★If there is any reading, the brush holder assembly has a short. Replace the brush plate assembly.

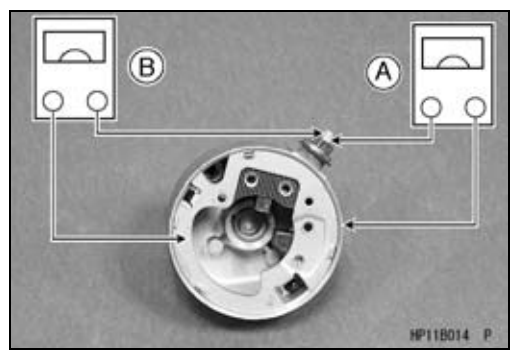

Starter Relay Inspection

- Remove:
  Seat (see Seat Removal in the Frame chapter)
  Starter Relay [A]

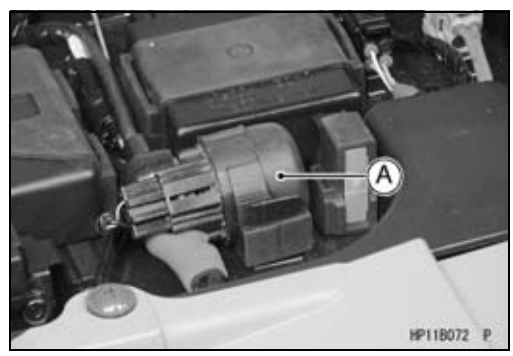

- Connect the hand tester [A] and a 12 V battery [B] to the starter relay as shown.

★If the relay does not work as specified, the relay is defective. Replace the relay.

Testing Relay
Hand Tester Range: × 1Ω range
Criteria: When battery is connected ⇒ 0 Ω
When battery is disconnected ⇒ ∞Ω

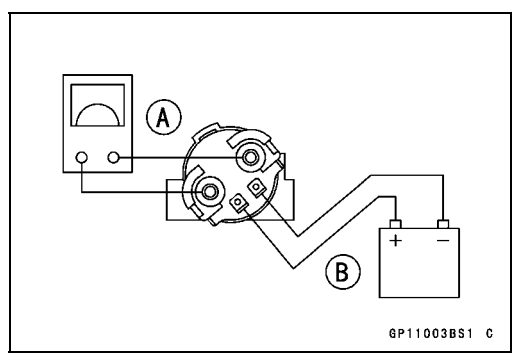

Electric Starter System

Starter Circuit Relay Inspection

● Remove:
Seat (see Seat Removal in the Frame chapter).
Starter Circuit Relay [A] (Brake Switch Circuit)
Starter Circuit Relay [B] (Neutral Switch Circuit)

○The starter circuit relays for the brake and neutral switch circuits are identical.

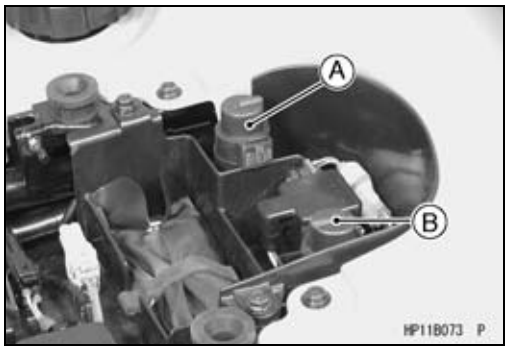

● Connect the hand tester [A] and a 12 V battery [B] to the starter circuit relay [C] as shown.

★If the relay does not work as specified, the relay is defective. Replace the relay.

Testing Relay

Hand Tester Range: × 1 Ω

Criteria: When battery is connected ⇒ 0 Ω

When battery is disconnected ⇒ ∞Ω

Relay Coil Terminals [1] and [2]

Relay Switch Terminals [3] and [4]

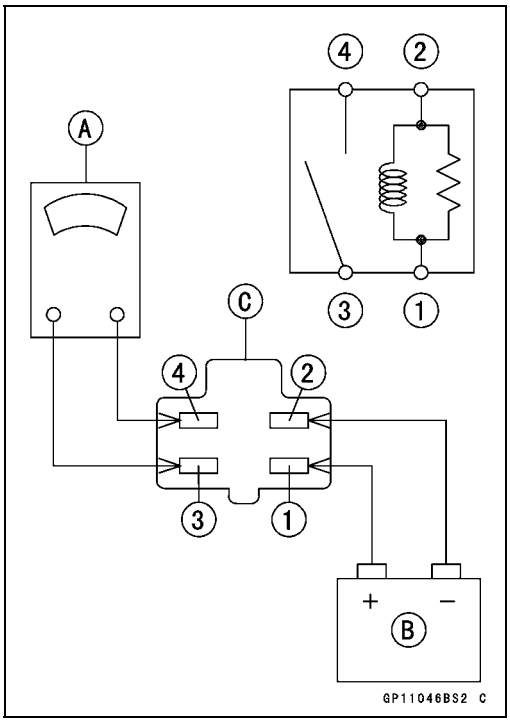

Electric Starter System

Electric Starter Circuit

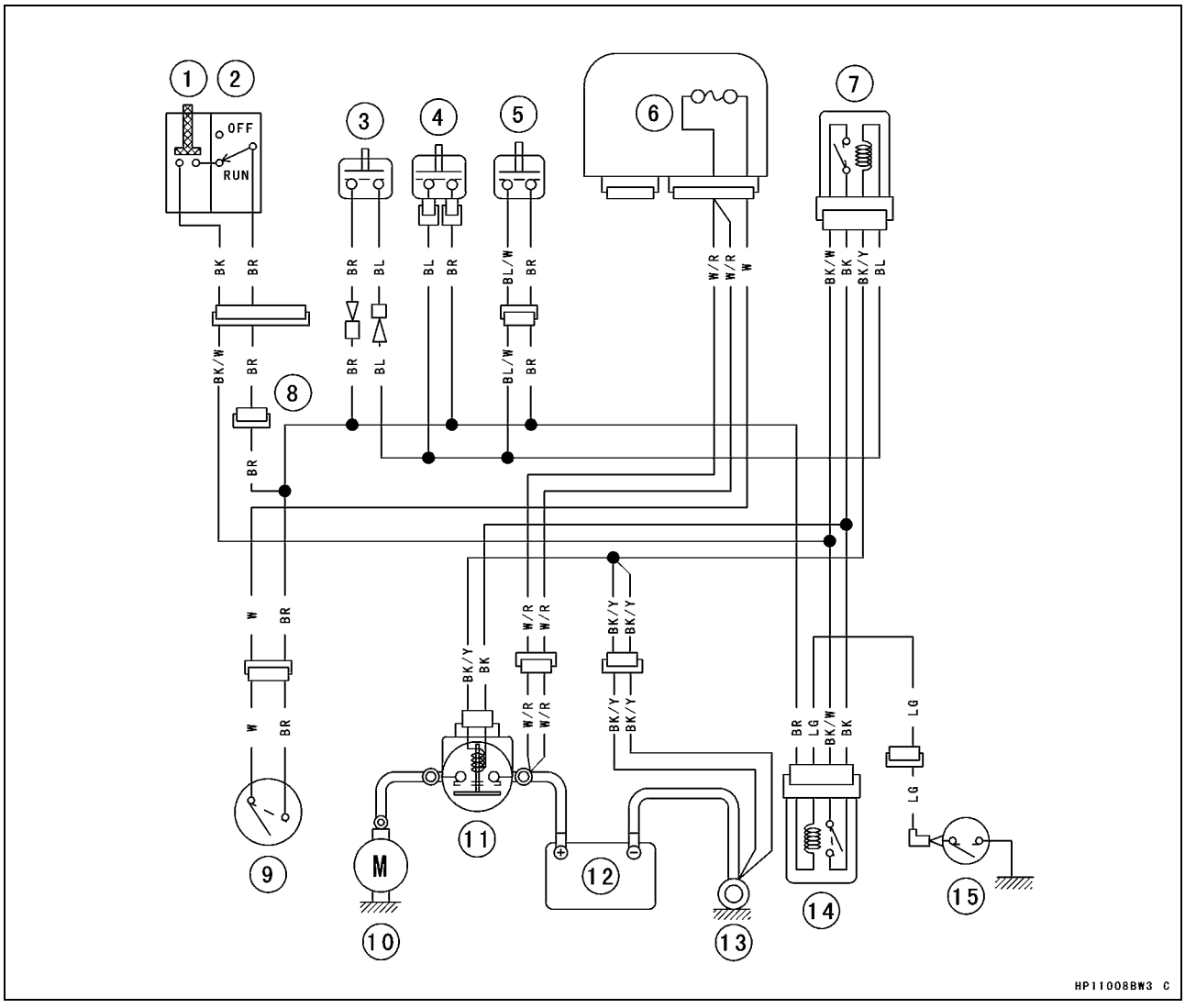

1. Starter Button
2. Engine Stop Switch
3. Parking Brake Light Switch
4. Front Brake Light Switch
5. Rear Brake Light Switch
6. Main Fuse 30 A
7. Starter Circuit Relay (Brake)
8. Reset Connector
9. Ignition Switch
10. Starter Motor
11. Starter Relay
12. Battery
13. Engine Ground Terminal
14. Starter Circuit Relay (Neutral)
15. Neutral Switch

Electric Starter System

Starter Motor Clutch Removal

- Remove the alternator rotor (see Alternator Rotor Removal).
- Hold the rotor with the flywheel holder and take out the starter motor clutch bolts [A].

  Special Tool - Flywheel Holder: 57001-1313

- Take out the one-way clutch [A].

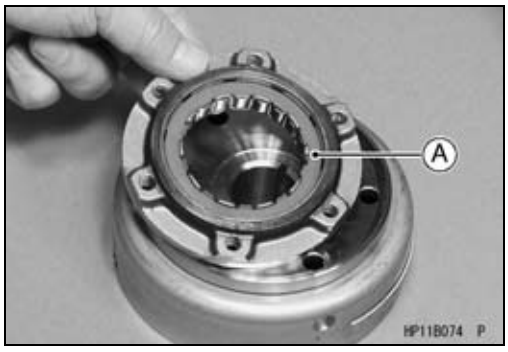

Starter Motor Clutch Installation

- Install the one-way clutch so that the flange [A] fits on the recess [B] of the race.
- Apply a non-permanent locking agent:
  Starter Motor Clutch Bolts
- Tighten:

  Torque - Starter Motor Clutch Bolts: 34 N·m (3.5 kgf·m, 25 ft·lb)

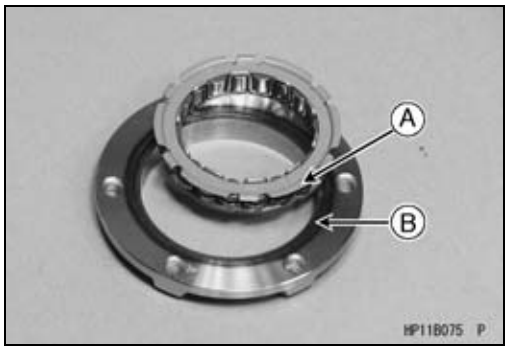

Starter Motor Clutch Inspection

- Remove:
  Alternator Rotor (see Alternator Rotor Removal)
- Fit the starter clutch gear into the starter motor clutch.

★If the alternator rotor turns counterclockwise [A] freely from the starter clutch gear, but not clockwise [B], the clutch is operating correctly.

★If the clutch does not operate correctly, or if it makes noise, disassemble it and examine each part visually. Replace any worn or damaged parts.

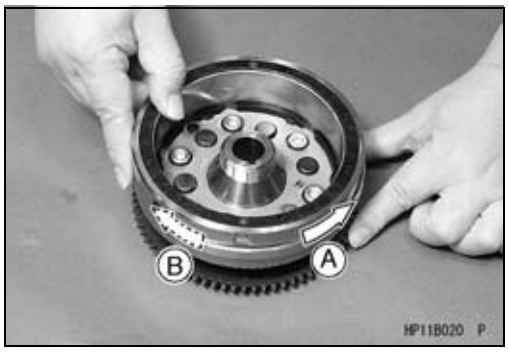

NOTE

○*Examine the starter clutch gear [A]. Replace it if it is worn or damaged.*

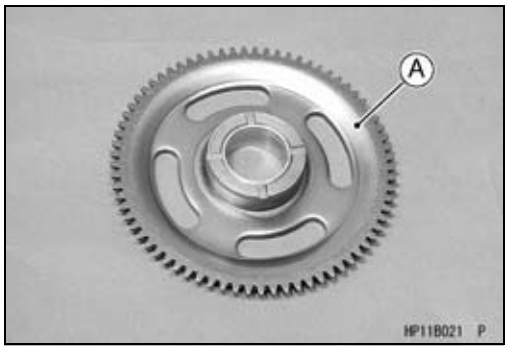

Electric Starter System

Torque Limiter Inspection

- Remove:
  Alternator Rotor (see Alternator Rotor Removal)
- Remove the torque limiter [A] and visually inspect it.

★If the limiter has wear, discoloration, or other damage, replace it as a unit.

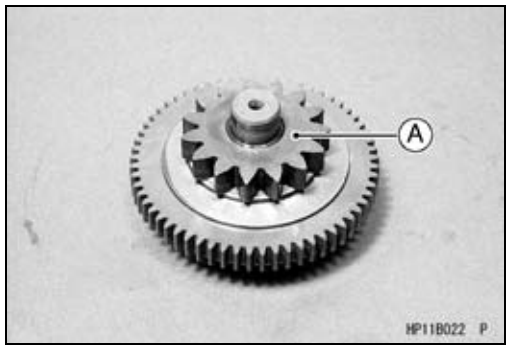

Lighting System

Headlight Beam Vertical Adjustment

- Turn the adjusting screw [A] on each headlight rim in or out to adjust the headlight vertically.

NOTE

○*On high beam, the brightest point should be slightly below horizontal with the vehicle on its wheels and the rider seated. Adjust both headlights to the same angle.*

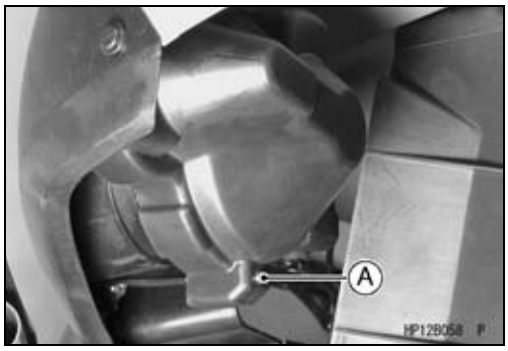

Headlight Bulb Replacement

- Remove:
  Connector [A]
  Clamp [B]
  Screw [C]

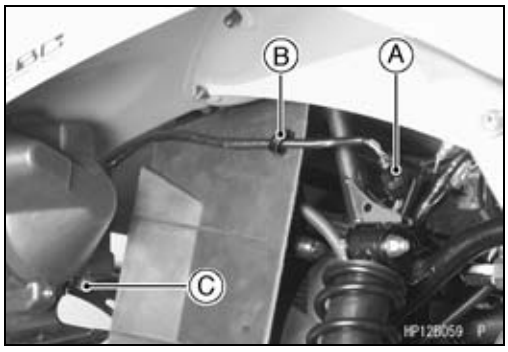

- Remove:
  Headlight Bolts [A] and Collars
  Headlight Body [B]

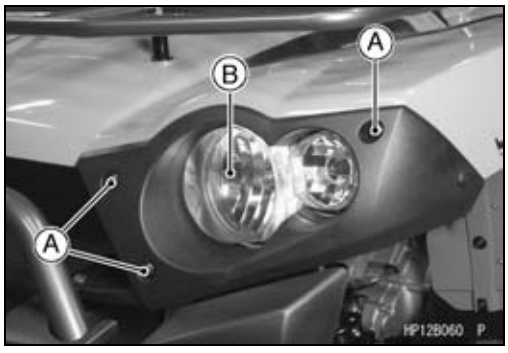

- Remove:
  Vertical Adjustment Screw [A], Spring, and Nut
  Bolts [B]
  Headlight Cover [C]

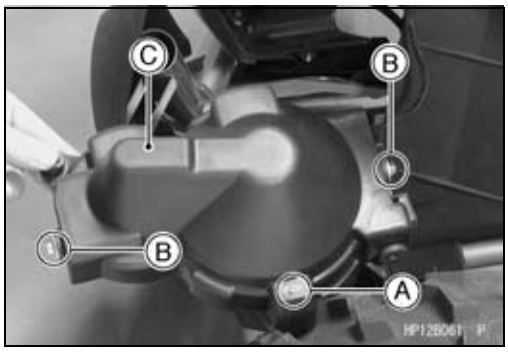

- Disconnect:
  Connector [A]

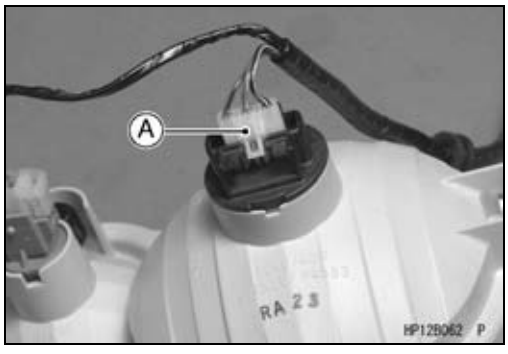

Lighting System

- Turn the bulb socket [A] counterclockwise [B], and remove the bulb.

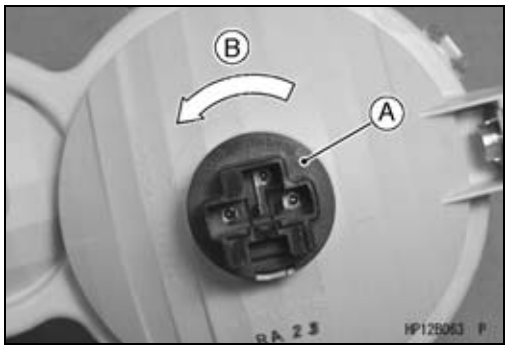

- Align the mark [A] of a new bulb socket with the mark [B] of the headlight body.
- Turn the bulb socket clockwise until it is stopped.

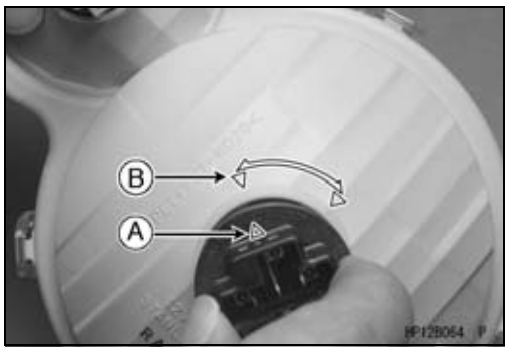

- Disconnect the position light lead connector.
- Turn the bulb socket [A] counterclockwise [B], and remove the bulb.

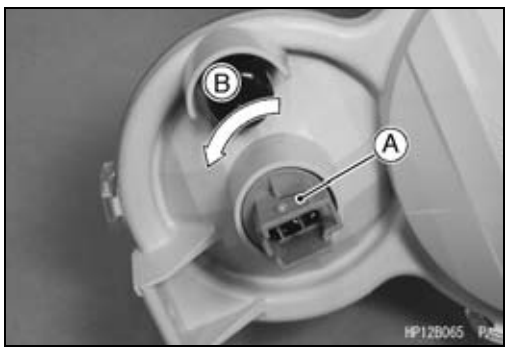

- Align the mark [A] of a new bulb socket with the mark [B] of the headlight body.
- Turn the bulb socket clockwise until it is stopped.

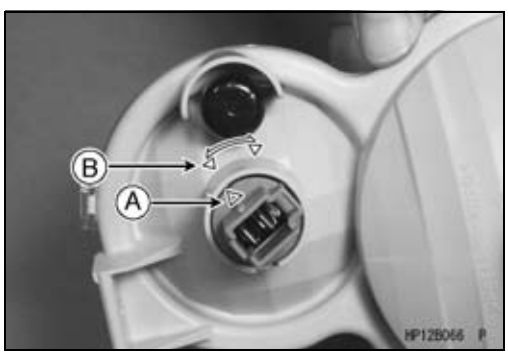

- Install the removed parts.
  [A] Bolt and Collar [L = 6 mm (0.24 in.)]
  [B] Bolt and Collar [L = 4 mm (0.16 in.)]
  [C] Bolt (only)

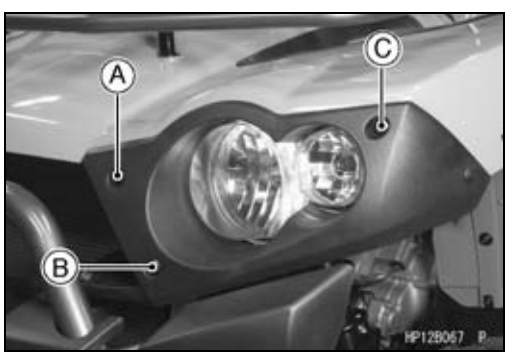

Lighting System

Taillight Bulb Replacement

- Remove:
  Taillight Lens Mounting Screws [A]
  Taillight Lens [B]

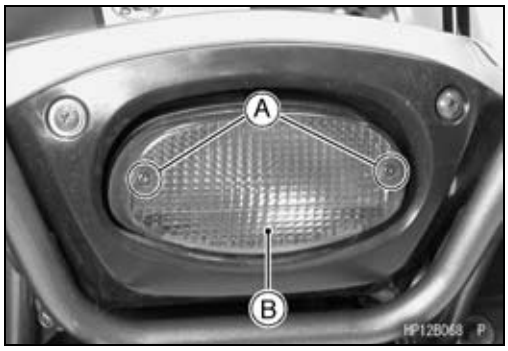

- Push the bulb [A] in, turn it counterclockwise, and pull it out.
- Be sure the socket is clean.

- Insert the new bulb by aligning the pins [A] with the grooves in the walls of the socket.
- Push the bulb in, turn it clockwise, and release it. It should lock in position.

Lighting System

Lighting System Circuit

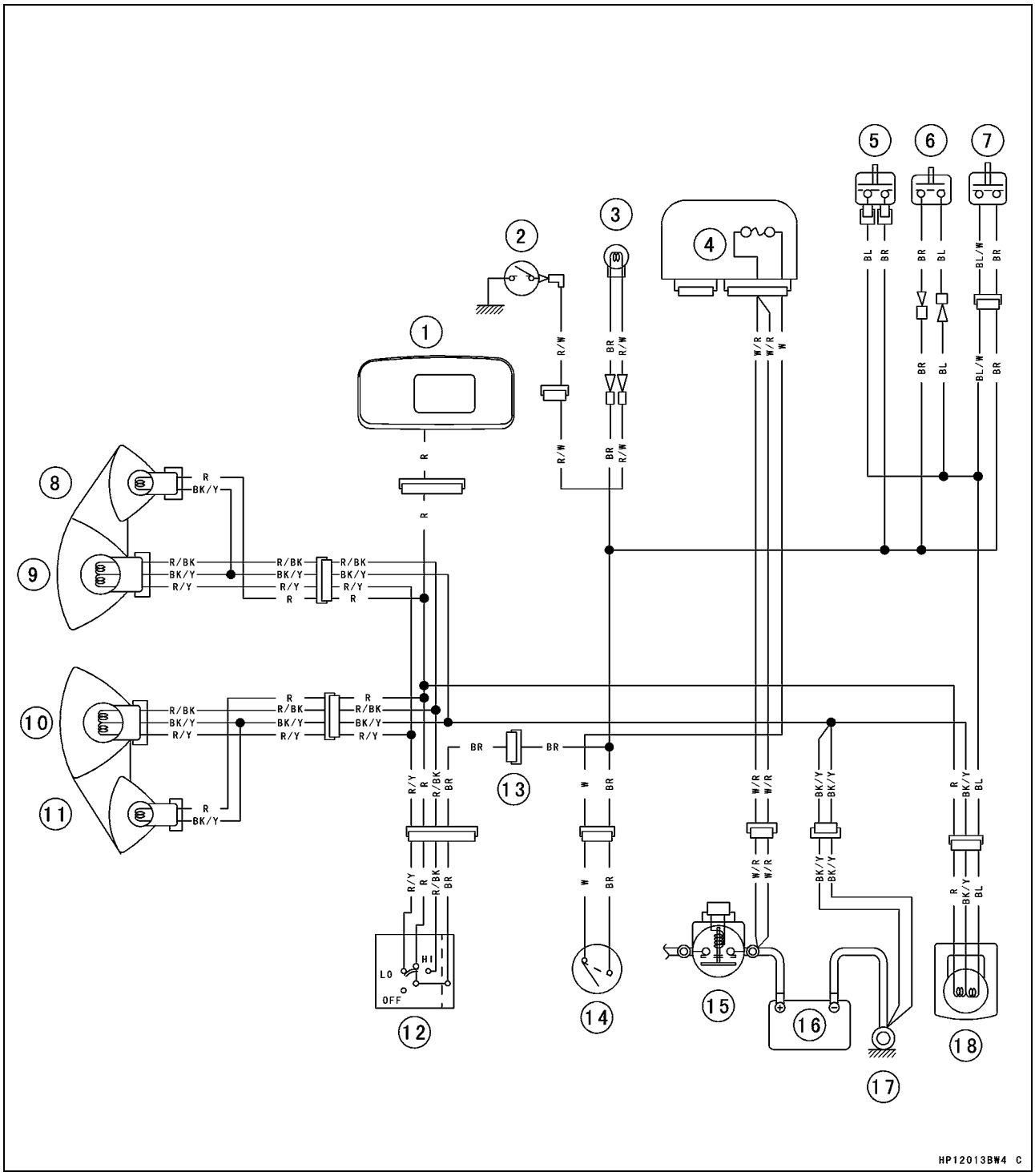

1. Multifunction Meter
2. Reverse Switch
3. Reverse Light (EUR and GB models)
4. Main Fuse 30 A
5. Front Brake Light Switch
6. Parking Brake Light Switch
7. Rear Brake Light Switch
8. Position Light (Right)
9. Headlight (Right)
10. Headlight (Left)
11. Position Light (Left)
12. Light/Dimmer Switch
13. Reset Connector
14. Ignition Switch
15. Starter Relay
16. Battery
17. Engine Ground Terminal
18. Tail/Brake Lights

Radiator Fan System

Radiator Fan Circuit Inspection

- Remove:
  Screw [A]
  Left Lower End of Radiator Cover [B]

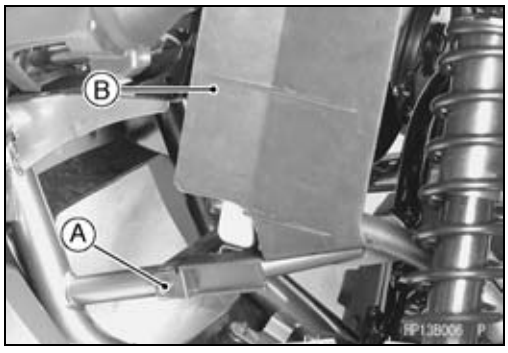

- Disconnect the leads from the radiator fan switch [A].
- Using an auxiliary wire [B], connect the radiator fan switch leads.

★If the fan rotates, inspect the fan switch.
★If the fan does not rotate, inspect the following.
  Leads and Connectors
  Main Fuse and Fan Fuse
  Fan Motor

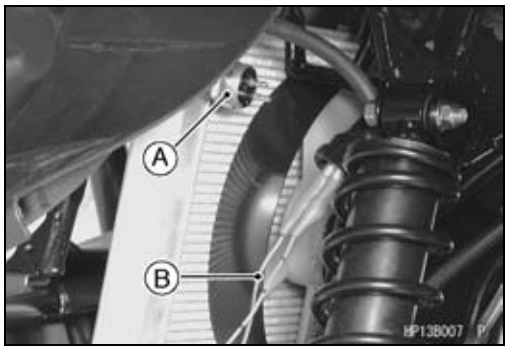

Radiator Fan Motor Inspection

- Disconnect the connector [A] in the fan lead.
- Using two auxiliary wires, supply battery [B] voltage to the fan motor.

★If the fan does not rotate, the fan motor is defective and must be replaced.

Radiator Fan Motor Leads

BL	**Battery (+)**
BK	**Battery (–)**

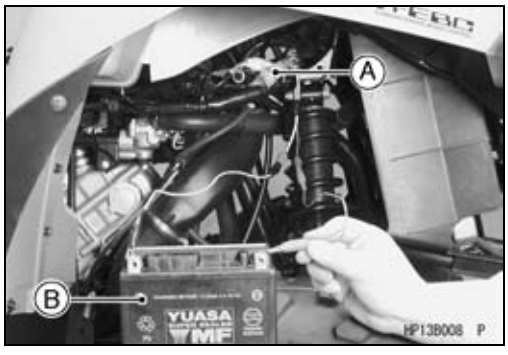

Radiator Fan Breaker Inspection

- Remove:
  Seat (see Seat Removal in the Frame chapter)
  Radiator Fan Breaker [A]

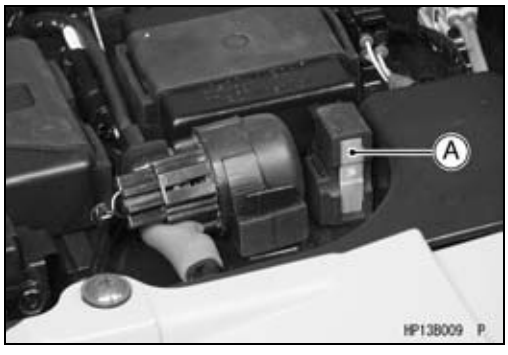

- Inspect the breaker for operation.
- Connect:
  12 V Battery [A]
  0.6 Ω Resistance [B]
  Radiator Fan Breaker [C]
  Switch [D]

★If the circuit in the breaker will not open within 60 seconds, replace the breaker.

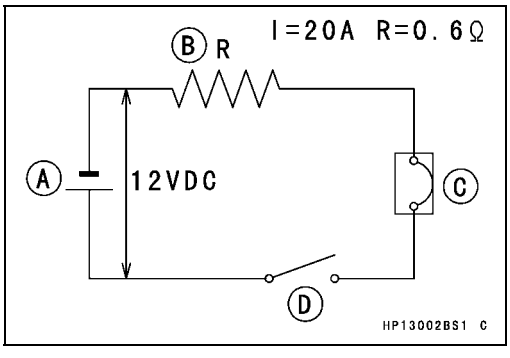

Radiator Fan System

Radiator Fan Breaker Installation

- Install:
  Radiator Fan Breaker [A]
  Holder [B]
- Connect:
  White Lead [C]
  Blue/White Lead [D]
  [E] Electrical Parts Case
  [F] Right Side

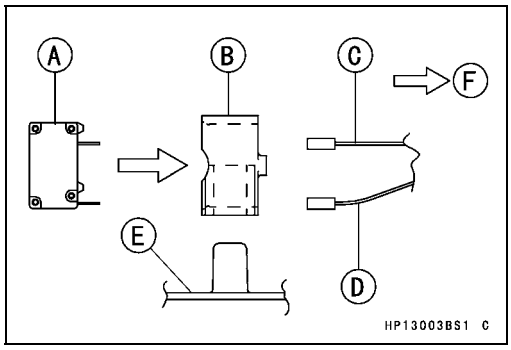

Radiator Fan Circuit

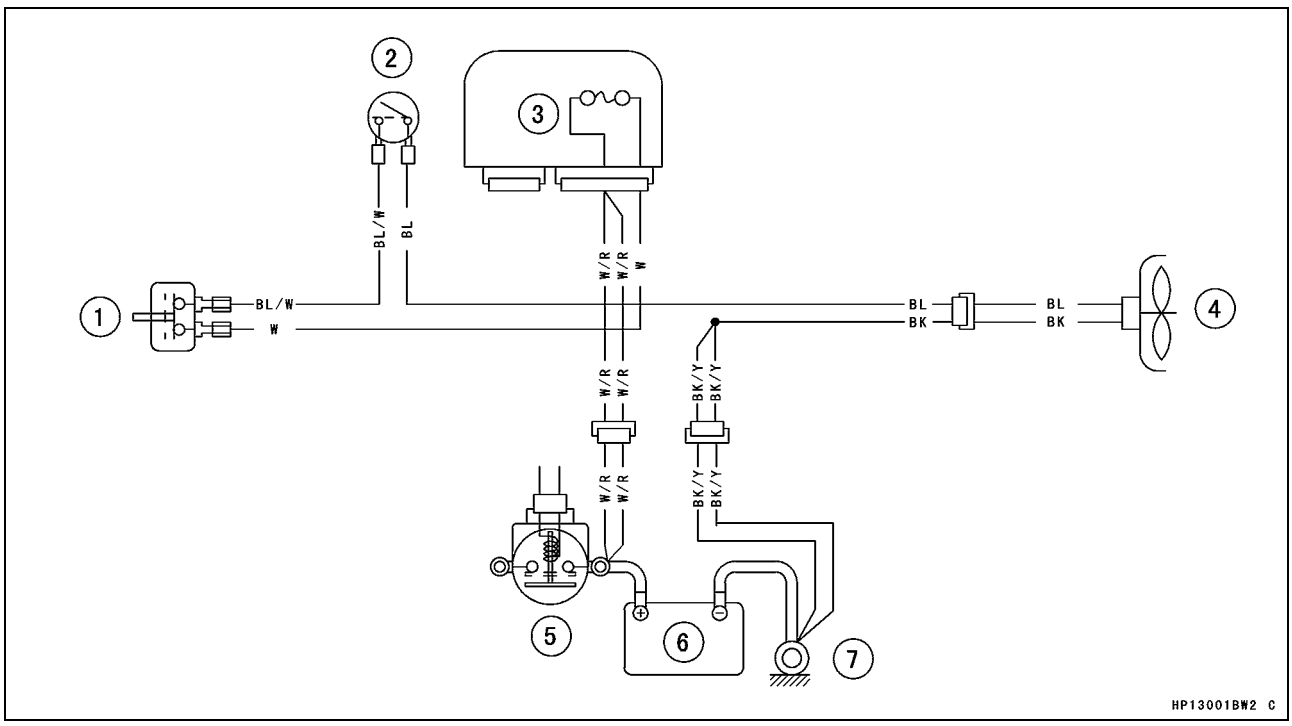

1. Radiator Fan Breaker
2. Radiator Fan Switch
3. Main Fuse 30 A
4. Radiator Fan
5. Starter Relay
6. Battery 12 V12 Ah
7. Engine Ground Terminal

Meter

Multifunction Meter Unit Removal

- Remove:
  Handlebar Cover Screws [A]

- Remove:
  Handlebar Cover Screws [A]
  Handlebar Cover Front [B]

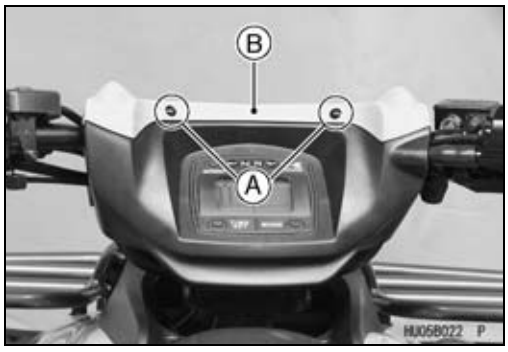

- Remove:
  Meter Lead Connectors [A]
  Handlebar Cover Screws [B]

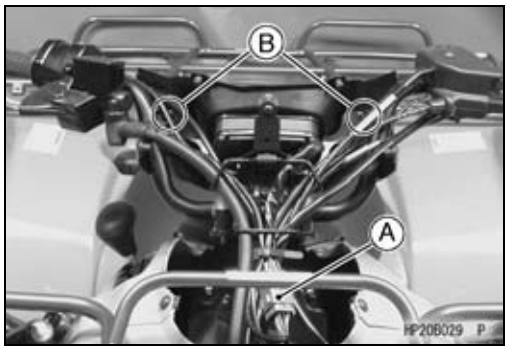

- Remove:
  Handlebar Cover Screw [A]
  Handlebar Cover Rear [B]

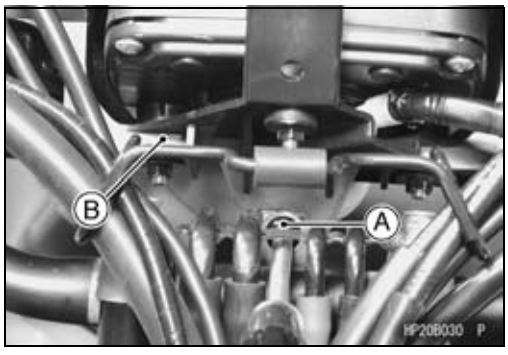

- Remove:
  Bracket Mounting Screws [A]
  Meter and Bracket [B]
  Upper Damper

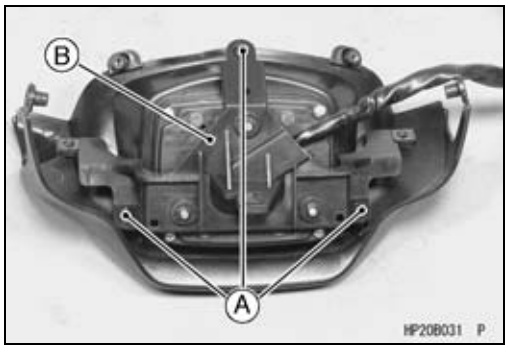

Meter

- Remove:
  Multifunction Meter Mounting Nuts [A] and Washers
  Bracket [B]
  Multifunction Meter Unit [C]

CAUTION
Do not drop the meter unit.

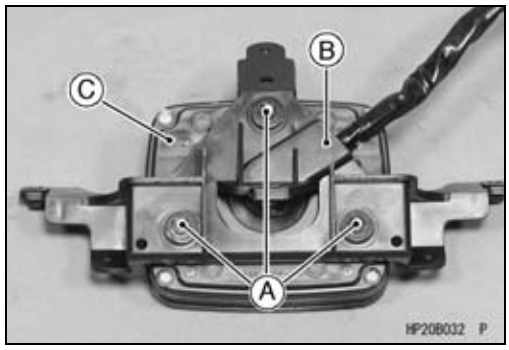

Multifunction Meter Unit Inspection

- Remove:
  Multifunction Meter Unit (see Multifunction Meter Unit Removal)

CAUTION
Do not drop the meter unit.

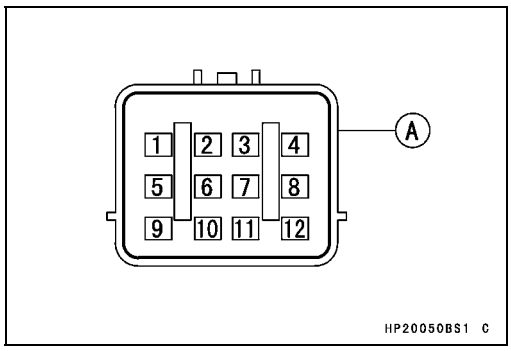

[A] Meter Unit Lead Connector
[1] Speed Sensor Pulse
[2] Belt Indicator Light (LED) (–)
[3] Water Temperature Sensor (–)
[4] 2WD/4WD LCD Indicator (–)
[5] Fuel Gauge (Fuel Indicator LCD Segments)
[6] Meter Illumination (+)
[7] Reverse Indicator Light (LED) (–)
[8] Neutral Indicator Light (LED) (–)
[9] Ignition (+)
[10] Battery (+)
[11] Oil Pressure Warning Indicator Light (LED)
[12] Battery (–)
LED: Light Emitting Diode
LCD: Liquid Crystal Display

Check 1: LCD Segments Check

- Using auxiliary wires, connect a 12 V battery to the meter unit connector as follows.
- Connect the battery positive (+) terminal to terminal [10].
- Connect the battery negative (–) terminal to terminal [12].
- Connect terminal [9] to the battery (+) terminal.

○When the terminal [9] is connected, all the LCD segments appear for one second.
○When the terminal [9] is disconnected, all the LCD segments disappear.
★If this display function does not work, replace the meter unit.

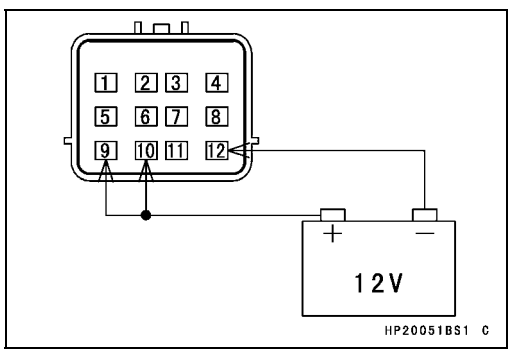

Check 2: MODE and TIME SET Buttons Operation Check

- Connect the wires in the same manner as Check 1.
- Check that when the MODE button [A] is pushed and held continuously, the display [B] cycles through the four modes.
  ODO → TRIP A → TRIP B → Hour → ODO

★If this display function does not work, replace the meter unit.

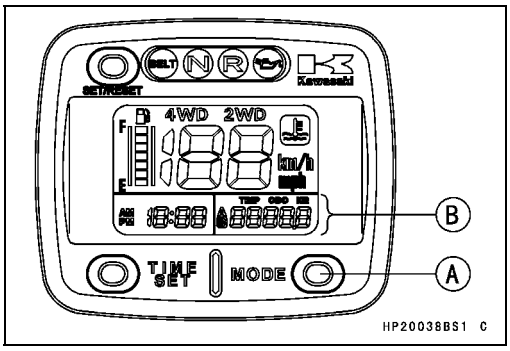

- Cycle the meter to TRIP A or TRIP B mode.
- Check that when the SET/RESET button [A] is pushed, the display turns to 0.0.

★If this display function does not indicate 0.0 [B], replace the meter unit.

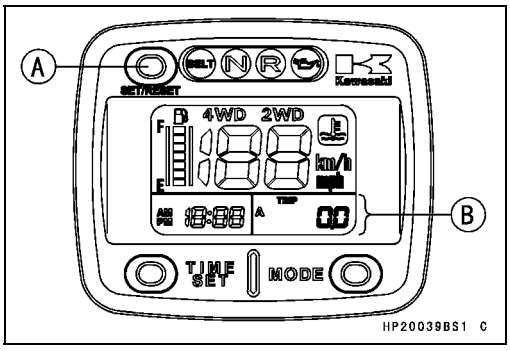

- Check that when the TIME SET [A] and SET/RESET [B] buttons are pushed, the time [C] will reset.

★If the meter function does not work, replace the meter unit.

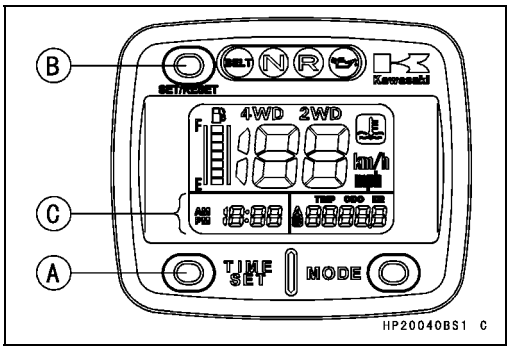

Check 3: Speedometer Check

- Connect the wires in the same manner as Check 1.
- The speed equivalent to the input frequency is indicated in the oscillator [A], if the square wave is input into terminal [1].

○Indicates approximately 40 mph if the input frequency is approximately 789 Hz.

○Indicates approximately 40 km/h if the input frequency is approximately 526 Hz.

★If the meter function does not work, replace the meter unit.

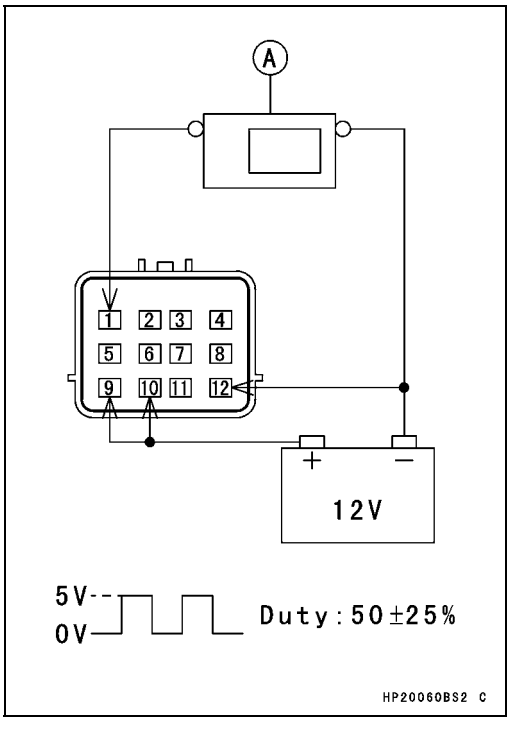

Meter

Check 4: Odometer Check

- Connect the wires in the same manner as Check 3.
- Pushing the MODE button [A], cycles the odometer [B].
- Raise the input frequency of the oscillator to see the result of this inspection.

★If the value indicated by the odometer does not work, replace the meter unit.

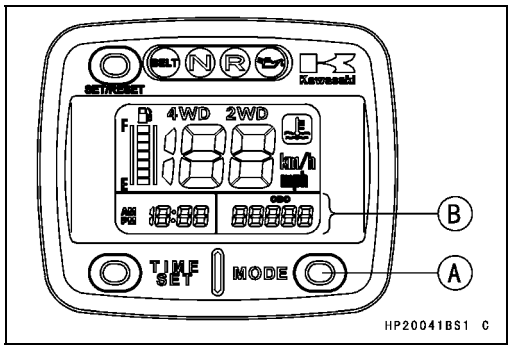

Check 5: Trip Meter A/B Check

- Connect the wires in the same manner as Check 3.
- Pushing the MODE button [A], cycles the trip meter A or B [B].
- Raise the input frequency of the oscillator to see the result of this inspection.

★If the value indicated by the trip meter A or B does not increase, replace the meter unit.

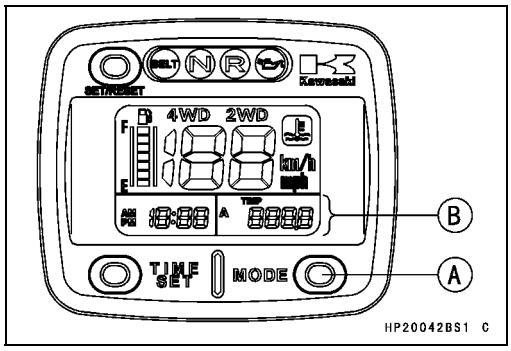

Check 6: Fuel Meter Check

- Connect the wires in the same manner as Check 1.

○The first segment (LCD) [A] should flash.

★It the segment (LCD) does not flash, replace the meter unit.

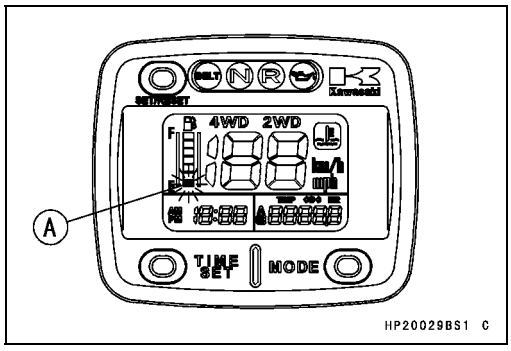

- Connect terminal [5] to the battery (–) terminal.

○When terminal [5] is connected, one segment in the fuel gauge should appear every 15 seconds.

CAUTION
When all segments appeared, disconnect the terminal [5].

★If this display function does not work, replace the meter unit.

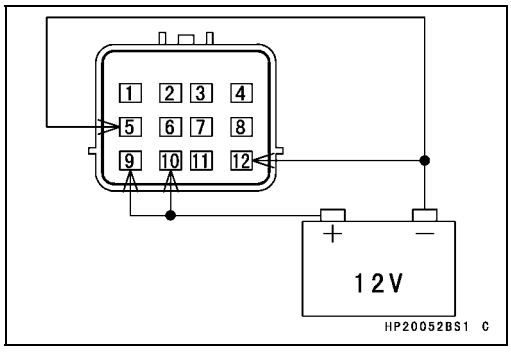

Check 7: 2WD/4WD Indicator Lights Check

- Connect the wires in the same manner as Check 1.

○The 2WD indicator light (LCD) [A] should appear.

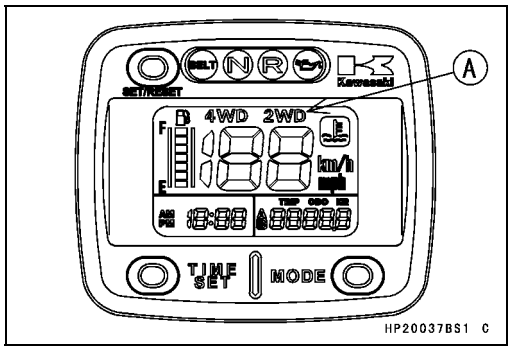

● Connect terminal [4] to the battery (–) terminal.

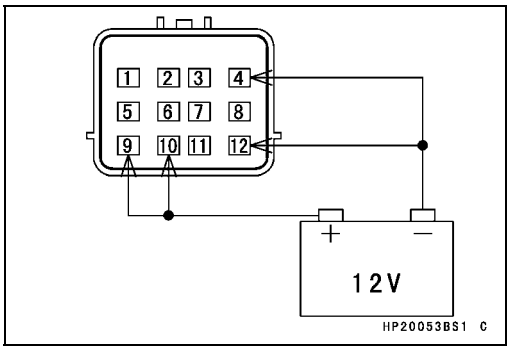

○The 4WD indicator light (LCD) [A] should appear.
★If this display function does not work, replace the meter unit.

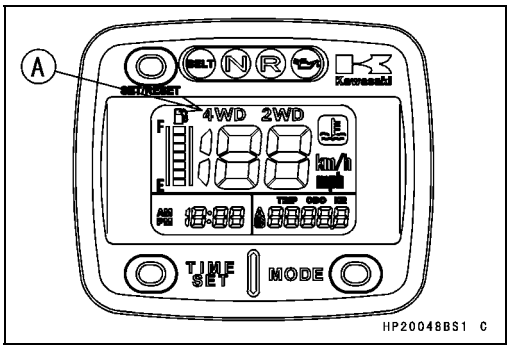

Check 8: Water Temperature Warning Symbol Check
● Connect the wires in the same manner as Check 1.
● Connect terminal [3] to the battery (–) terminal.

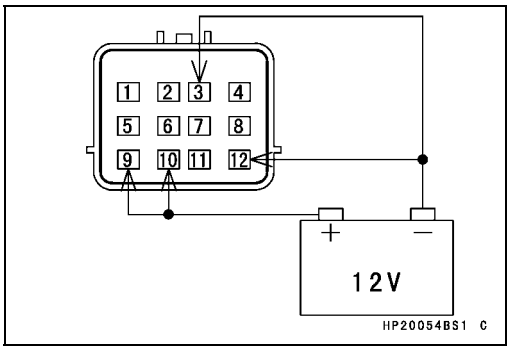

○The water temperature warning symbol (LCD) [A] should appear.
★If this display function does not work, replace the meter unit.

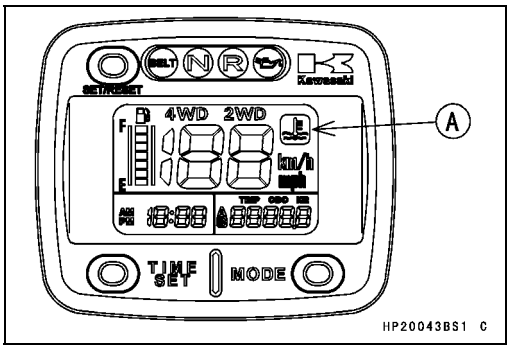

Check 9: Oil Pressure Warning Light Check
● Connect the wires in the same manner as Check 1.
● Connect terminal [11] to the battery (–) terminal.

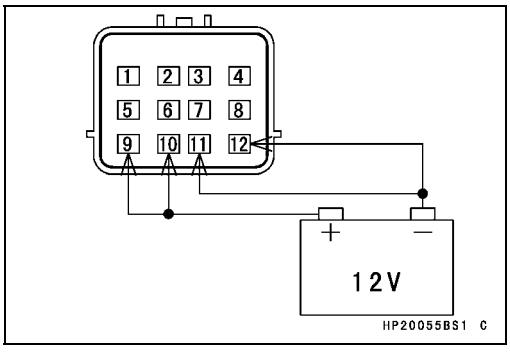

Meter

○The oil pressure warning light (LED) [A] should flash.
★If the LED light does not flash, replace the meter unit.

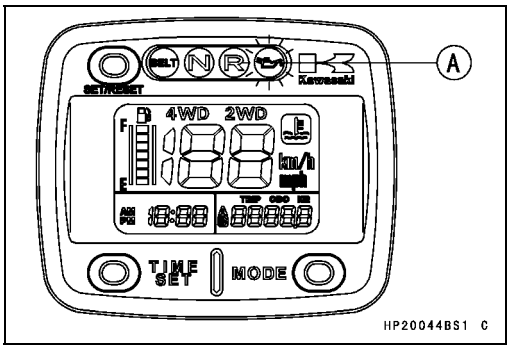

Check 10: Neutral Indicator Light Check
● Connect the wires in the same manner as Check 1.
● Connect terminal [8] to the battery (–) terminal.

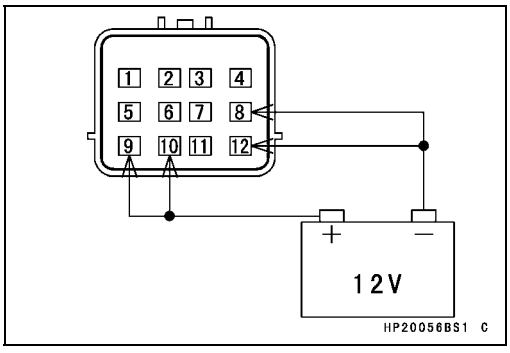

○The neutral indicator light (LED) [A] should go on.
★If the LED light does not go on, replace the meter unit.

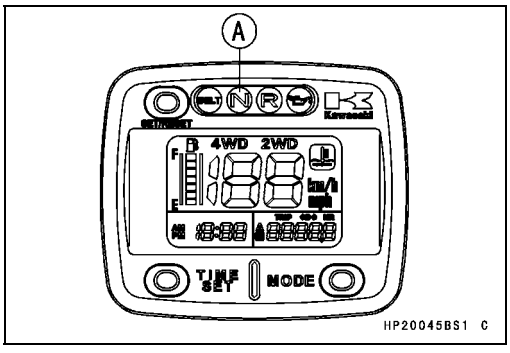

Check 11: Reverse Indicator Light Check
● Connect the wires in the same manner as Check 1.
● Connect terminal [7] to the battery (–) terminal.

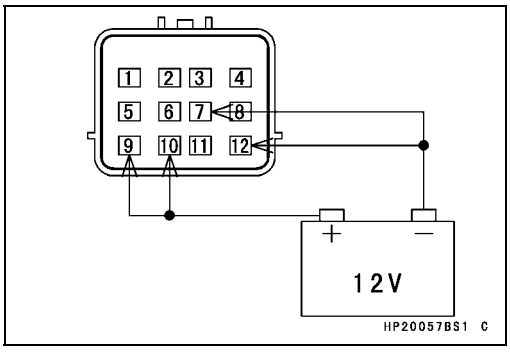

○The reverse indicator light (LED) [A] should go on.
★If the LED light does not go on, replace the meter unit.

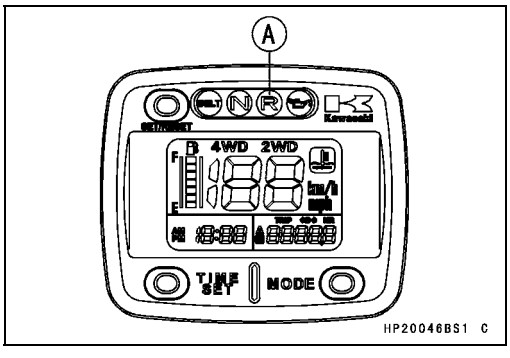

Check 12: Meter Illumination Check
- Connect the wires in the same manner as Check 1.
- Connect terminal [6] to battery (+) terminal.

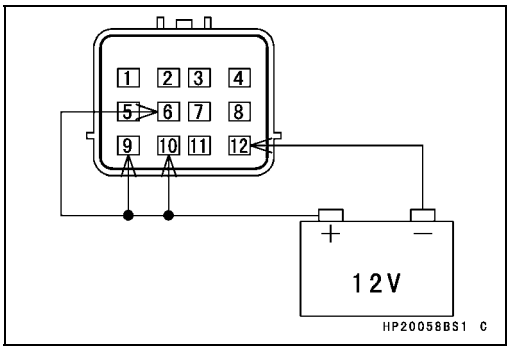

○The meter illumination [A] should go on.
★If the illumination does not go on, replace the meter unit.

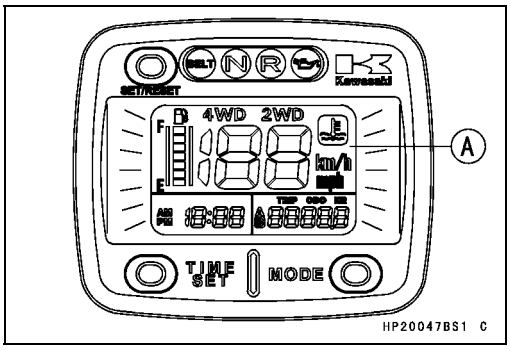

Check 13: Belt Check Indicator Light check
- Connect the wires in the same manner as Check 1.
- Connect terminal [2] to the battery (–) terminal.

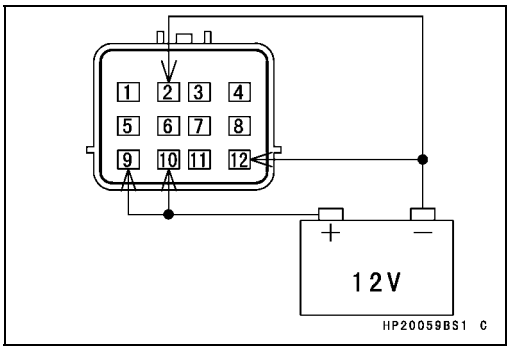

○The belt check indicator light (LED) [A] should go on.
★It the LED does not go on, replace the meter unit.

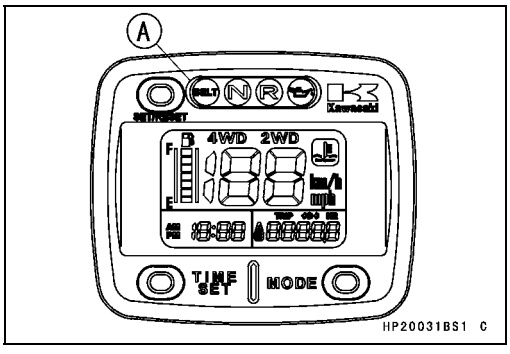

Drive Belt Failure Mode Memory Clearing Procedure

A flashing BELT check indicator LED (Light Emitting Diode) light means that the drive belt failure detection system has activated. The belt check indicator light will illuminate and stay on when activated by the 100 hour belt check system.

NOTE

○*Follow the instruction on page 2-25 of this Service Manual to complete the necessary inspections.*
○*After completing the inspections, follow these instructions to clear the system memory and turn off the light.*

Meter

- Turn off the ignition switch.
- Remove the seat (see Seat Removal in the Frame chapter).
- Disconnect both sets of 4 pin connectors [A] in the electrical parts case.

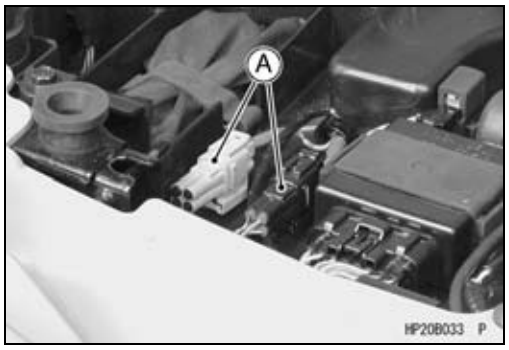

- Reconnect these 4 pin connectors to their opposite gray to black and black to gray as shown.

- Turn on the ignition switch.
- Observe the belt check indicator light [A].

○It should be flashing quickly.

- Disconnect the belt switch at the 2 pin connectors [A] above the torque converter cover.
- Observe the belt check indicator light.

○It should be flashing slowly.
○Let it flash for at least five seconds.

NOTE

○*More than five seconds is OK.*

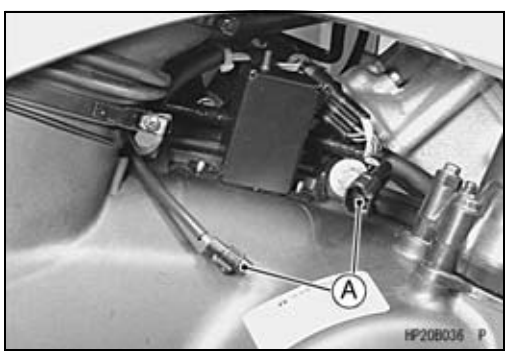

- While observing the belt check indicator light, turn off the ignition switch.
- Disconnect the mismatched 4 pin connector sets and reconnect them normally. (Black to black, gray to gray) [A]

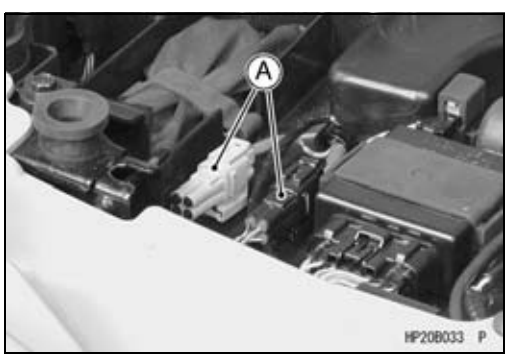

Meter

- Connect the belt switch 2 pin connector [A].

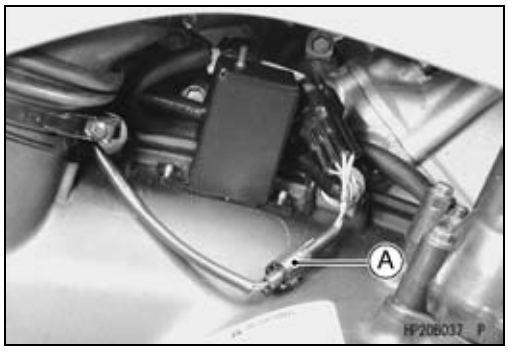

- Turn on the ignition switch.
- Confirm that no belt check indicator light is flashing.
- Put the connectors back and bend the clamps.

Meter

Meter Circuit

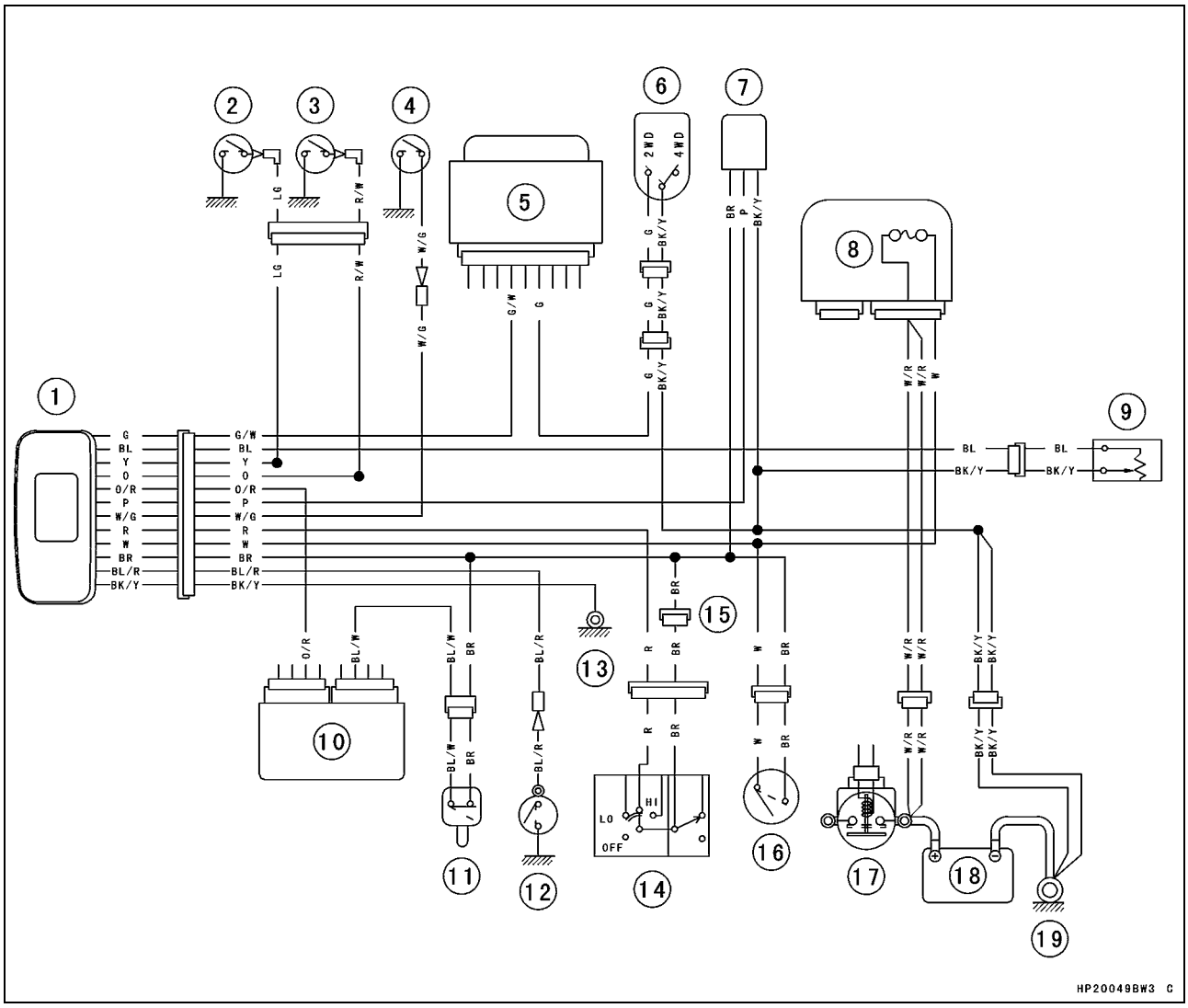

1. Multifunction Meter
2. Neutral Switch
3. Reverse Switch
4. Water Temperature Switch
5. Actuator Controller
6. 2WD/4WD Switch
7. Speed Sensor
8. Main Fuse 30 A
9. Fuel Level Sensor
10. Igniter
11. Belt Failure Detection Switch
12. Oil Pressure Switch
13. Frame Ground Terminal (Meter)
14. Light/Dimmer Switch
15. Reset Connector
16. Ignition Switch
17. Starter Relay
18. Battery 12 V 12 Ah
19. Engine Ground Terminal

Actuator Control System

2WD/4WD Actuator Removal

- Drain the front final gear case oil (see Front Final Gear Case Oil Change in the Periodic Maintenance chapter).
- Remove:
  Actuator Lead Connector [A]
  Clamp [B]

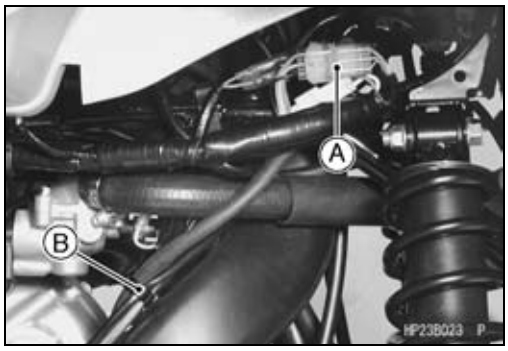

- Remove:
  Actuator Mounting Bolts [A]
  Actuator [B]

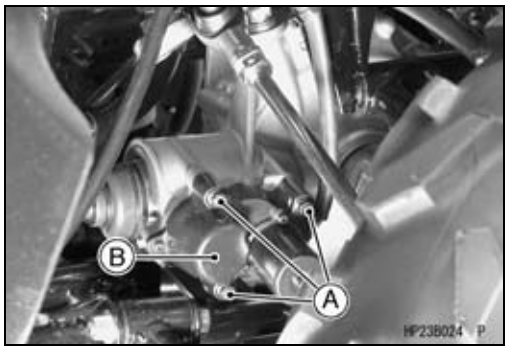

2WD/4WD Actuator Installation

- When installing the pin [A], apply engine oil to the rod of the actuator and install the collar [B] on the actuator and then press the pin.
- Apply grease to the O-ring [C].
- Apply molybdenum disulfide grease to the collar.
- Insert the collar into the groove [D] of the shifter so that the long side [E] faces downward.

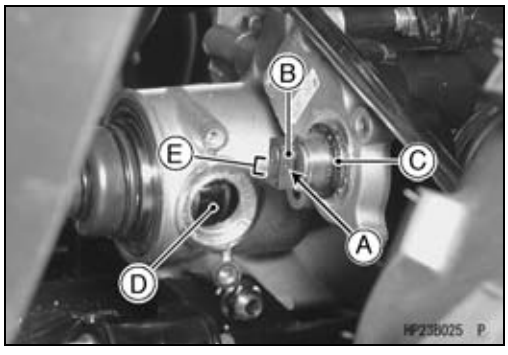

- Apply a non-permanent locking agent to the actuator mounting bolts, and tighten them following the tightening sequence [1 ~ 3].

  Torque - 2WD/4WD Actuator Mounting Bolts: 9.8 N·m (1.0 kgf·m, 87 in·lb)

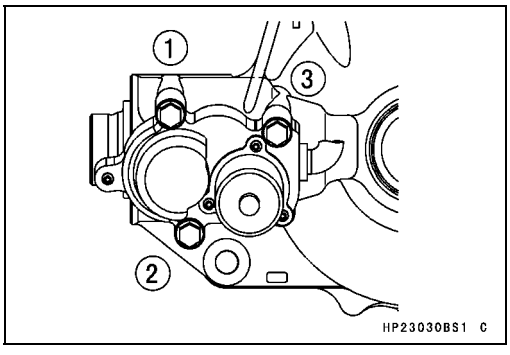

Engine Brake Actuator Removal

- Confirm that the ignition switch is in OFF position.
- Remove:
  Torque Converter Cover (see Torque Converter Cover Removal in the Converter System chapter)
  Actuator Mounting Bolts [A]
  Actuator [B]

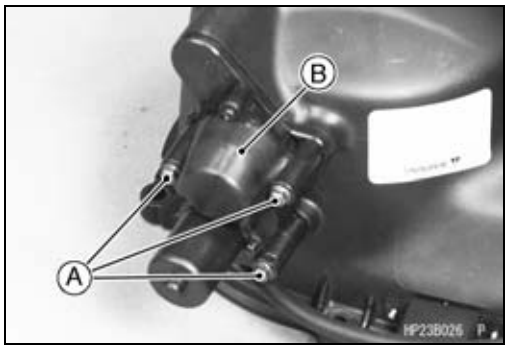

Actuator Control System

Engine Brake Actuator Installation

- Apply grease and Install:
  O-ring [A]
- Apply molybdenum disulfide grease to the pin [B].

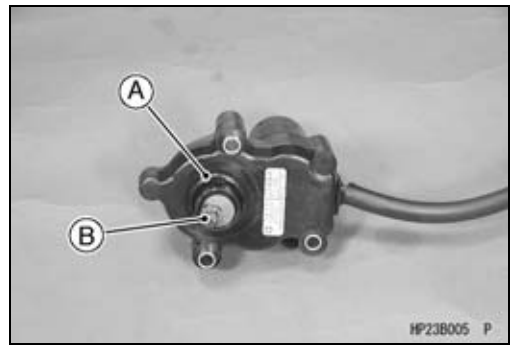

- Apply grease to the trim seal [A] and install the cover [B].

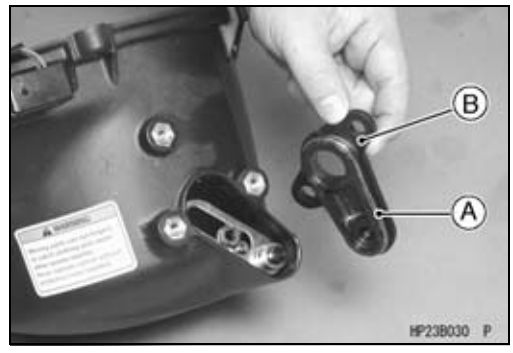

- Insert the pin into the collar [A] of the engine brake lever assembly [B].
- Wipe off any protruding grease.

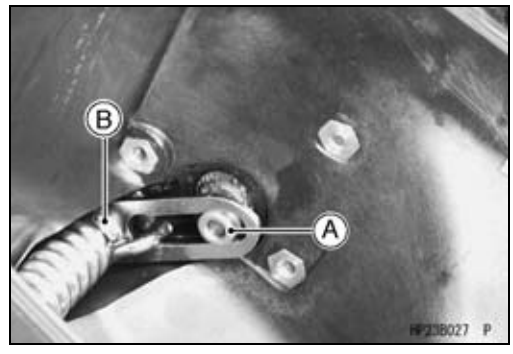

- Tighten the actuator mounting bolts following the tightening sequence [1 ~ 3].

  Torque - Engine Brake Actuator Mounting Bolts: 8.8 N·m (0.90 kgf·m, 78 in·lb)

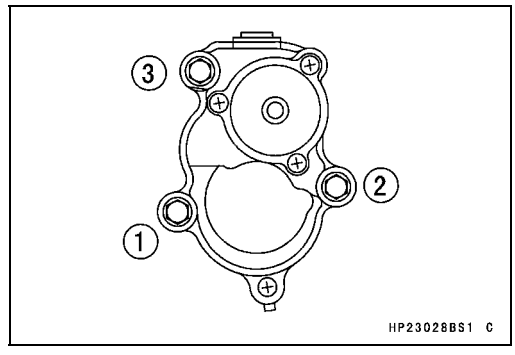

Actuator Control System Outline

The actuator controller has a microprocessor that detects vehicle speed, state of the selectable 2WD/4WD shift switch, ignition switch, and the forward/reverse movement of the vehicle in order to control the engine brake actuator and selectable 2WD/4WD actuator.

Actuator Control System

Actuator Control System

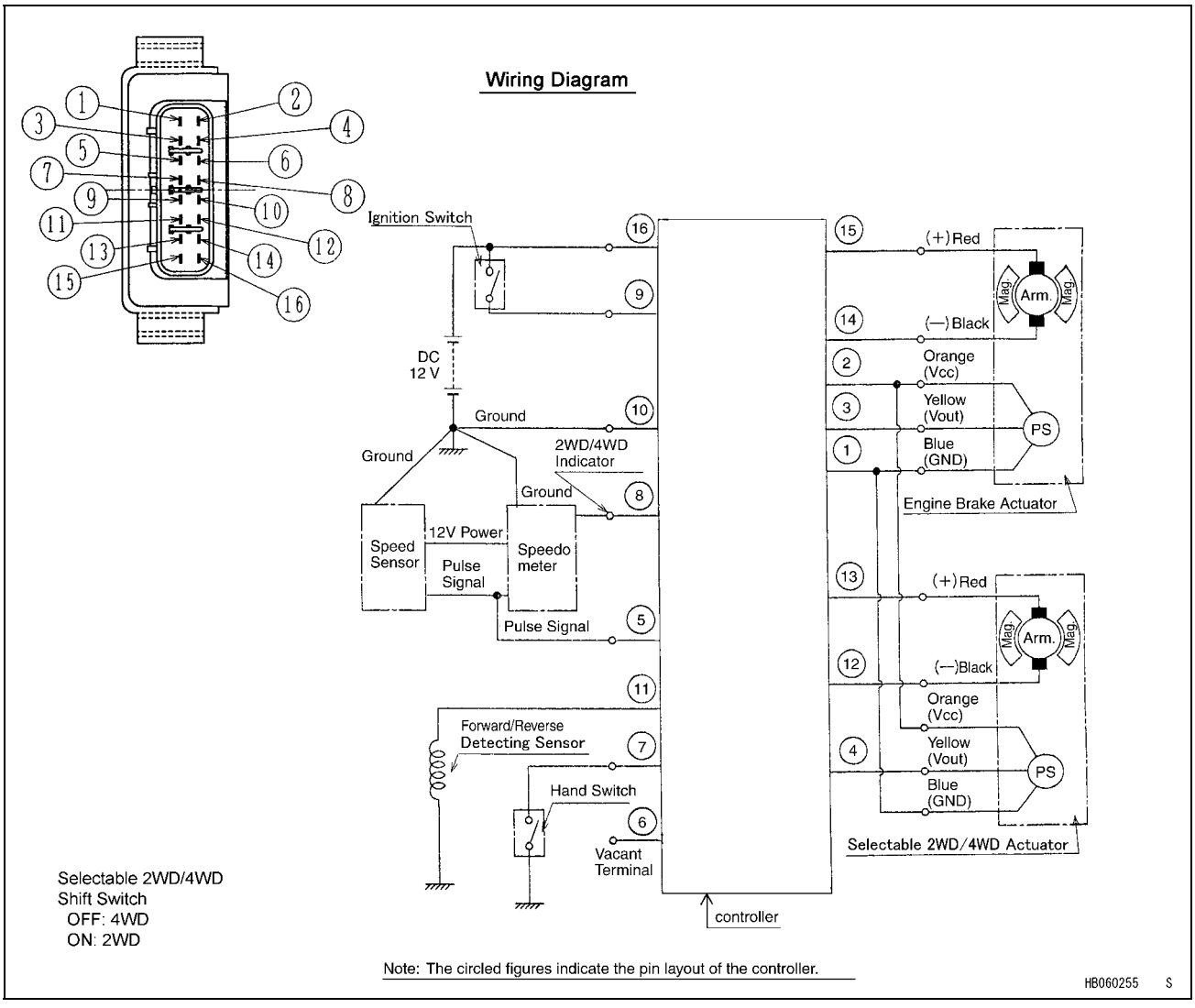

Actuator Control System Troubleshooting

When the actuator fails, the controller enters failure mode and the indicator light illuminates 2WD and 4WD alternately.

[A] 2WD Indicator Light (LCD)

[B] 4WD Indicator Light (LCD)

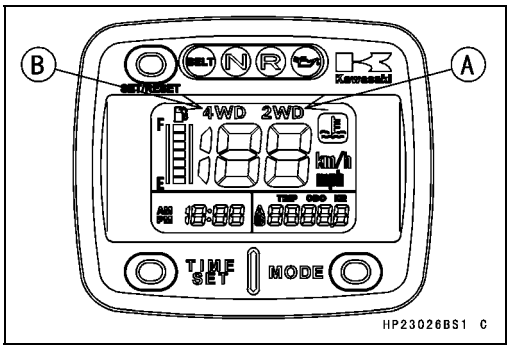

Actuator Control System

Failure Indication Pattern and Failure Part

No.	Failure Indication Pattern	Failure Part
1	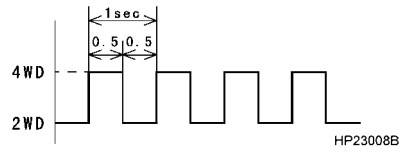	Selectable 2WD/4WD actuator
2	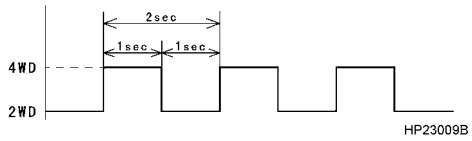	Engine brake actuator
3	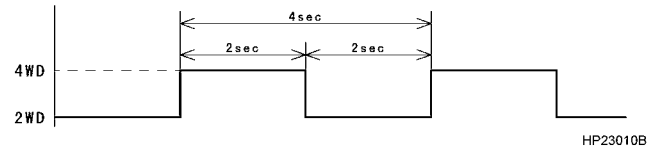	Both the selectable 2WD/4WD actuator and the engine brake actuator

Malfunction Mode

No.	Malfunction Mode	Probable Faulty Part/Location	Check Number
1	The 2WD/4WD actuator does not operate correctly.	2WD/4WD actuator Controller power supply Speed sensor 2WD/4WD shift switch Controller	1 3 4 5 6
2	The engine brake actuator does not operate correctly.	Engine brake actuator Controller power supply Speed sensor F/R detecting sensor Controller	2 3 4 7 6
3	The 2WD/4WD indicator light does not switch.	Indicator light (LCD) Controller	8 6

Check 1. 2WD/4WD Actuator Inspection

- Remove:
  Actuator Lead Connector [A]
  Clamp [B]

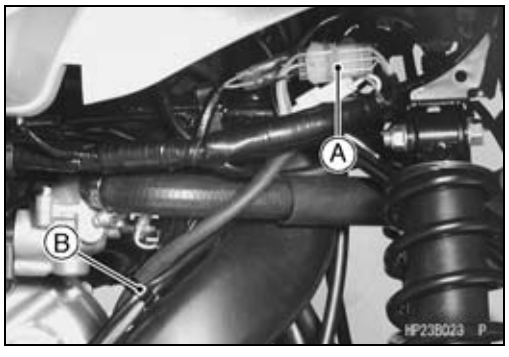

- Measure the resistance between the following terminals in the actuator lead connector [A].

Special Tool - Hand Tester: 57001-1394

Actuator Internal Resistance

4 (Red) - 6 (Black):	**3 ~ 15 Ω**
1 (Orange) - 3 (Blue):	**3.5 ~ 6.5 kΩ**
2 (Yellow) - 3 (Blue):	**630 ~ 3,720 Ω**

★If any reading is not within the specified range, replace the 2WD/4WD actuator.

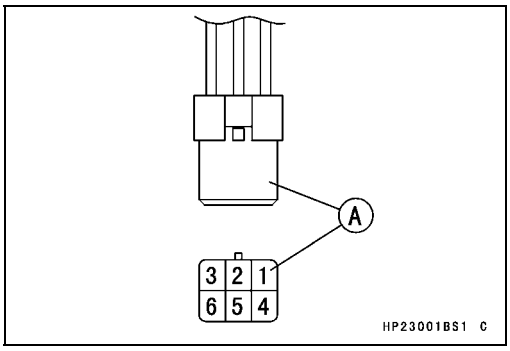

Check 2. Engine Brake Actuator Inspection

- Remove:
  Actuator Lead Connector [A]

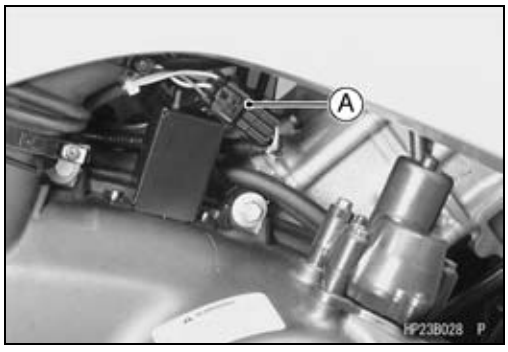

- Measure the resistance between the following terminals in the actuator lead connector [A].

Special Tool - Hand Tester: 57001-1394

Actuator Internal Resistance

4 (Red) - 6 (Black):	**3 ~ 15 Ω**
1 (Orange) - 3 (Blue):	**3.5 ~ 6.5 kΩ**
2 (Yellow) - 3 (Blue):	**630 ~ 5,330 Ω**

★If any reading is not within the specified range, replace the engine brake actuator.

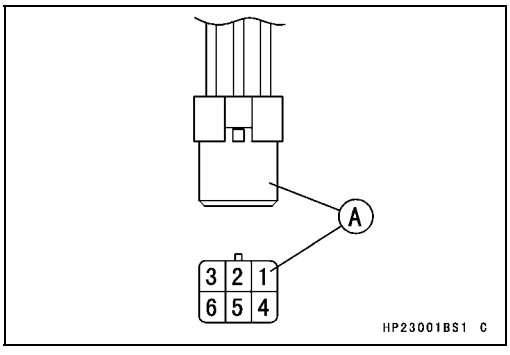

Check 3. Controller Power Supply Inspection

NOTE

○*Be sure the battery is fully charged.*

- Remove:
  Seat (see Seat Removal in the Frame chapter)
- Connect:
  Controller Connector [A]
  Hand Tester [B] (range: DC 25 V)
  Tester (+) → Connector (BR) Terminal [9]
  Tester (–) → Connector (BK/Y) Terminal [10]

○Install the needle adapters on the tester leads.

Special Tools - Hand Tester: 57001-1394
Needle Adapter Set: 57001-1457

- Turn ON the ignition switch.

Controller Power Supply Voltage
Standard: near Battery Voltage

★If the reading is not battery voltage, check the wiring harness, 30 A fuse, or ignition switch.

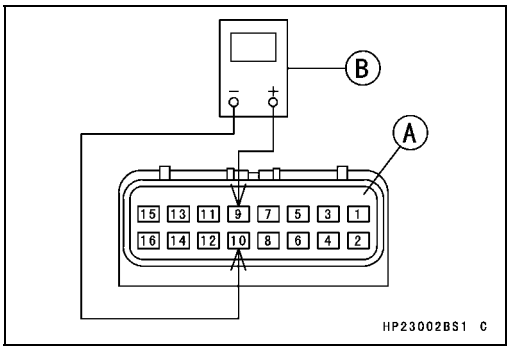

Actuator Control System

Check 4. Speed Sensor Inspection

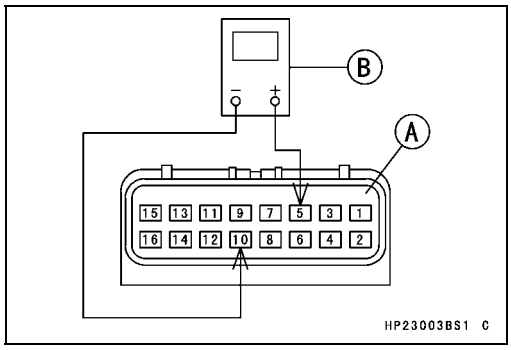

NOTE

○*Be sure the battery is fully charged.*

- Support the vehicle on a stand or a jack so that the wheels are off the ground.
- Remove:
  Seat (see Seat Removal in the Frame chapter)
- Connect:
  Controller Connector [A]
  Hand Tester [B] (range: DC 25 V)
  Tester (+) → Connector (P) Terminal [5]
  Tester (–) → Connector (BK/Y) Terminal [10]

○Install the needle adapters on the tester leads.

Special Tools - Hand Tester: 57001-1394
Needle Adapter Set: 57001-1457

- Turn ON the ignition switch.
- Spin a rear wheel, measure the voltage.

Speed Sensor Output Voltage
Standard: repeat from 0 to 5 V

★If the reading is not standard, replace the speed sensor.

○When installing a new O-ring on the speed sensor, apply grease all around the O-ring. Insert the speed sensor to the fully seated position before tightening the mounting bolt for the sensor.

NOTE

○*If the sensor is not fully seated before tightening the bolt, the O-ring can be damaged and oil may leak.*

Check 5. 2WD/4WD Shift Switch Inspection

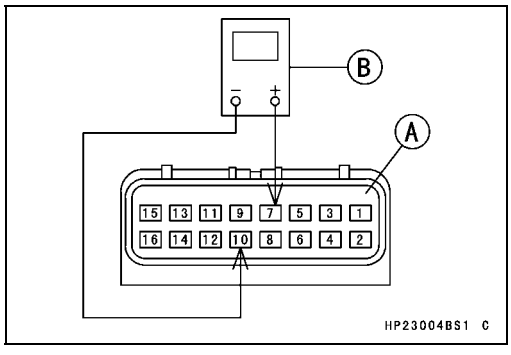

NOTE

○*Be sure the battery is fully charged.*

- Remove:
  Seat (see Seat Removal in the Frame chapter)
- Connect:
  Controller Connector [A]
  Hand Tester [B] (range: DC 10 V)
  Tester (+) → Connector (G) Terminal [7]
  Tester (–) → Connector (BK/Y) Terminal [10]

○Install the needle adapters on the tester leads.

Special Tools - Hand Tester: 57001-1394
Needle Adapter Set: 57001-1457

- Turn ON the ignition switch.
- Push the switch to the 4WD position.

Controller Output Voltage (at 2WD/4WD Shift Switch OFF, 4WD)
Standard: about 5 V

★If the reading is not standard, check the 2WD/4WD shift switch or actuator controller unit.

- Push the switch to the 2WD position.

Controller Output Voltage (at 2WD/4WD Shift Switch ON, 2WD)
Standard: 0 V

★If the reading is not standard, check the 2WD/4WD shift switch or actuator controller unit.

Check 6. Controller Unit Inspection

NOTE

○*Be sure the battery is fully charged.*

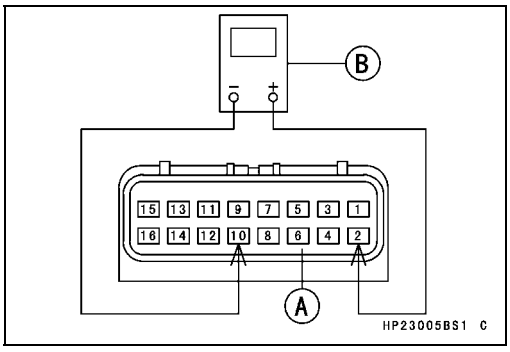

- Remove:
  Seat (see Seat Removal in the Frame chapter)
- Connect:
  Controller Connector [A]
  Hand Tester [B] (range: DC 10 V)
  Tester (+) → Connector (O) Terminal [2]
  Tester (–) → Connector (BK/Y) Terminal [10]

○Install the needle adapters on the tester leads.

Special Tools - Hand Tester: 57001-1394
Needle Adapter Set: 57001-1457

- Turn ON the ignition switch.
- Measure the controller output voltage for the actuators.

Controller Output Voltage (to Actuators)
Standard: 4.8 ±0.2 V

★If the reading is not standard, replace the actuator controller unit.

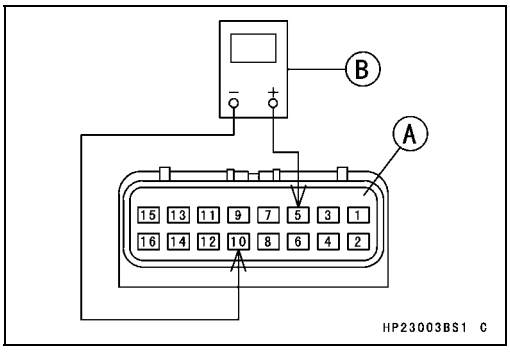

- Disconnect the speed sensor lead connector.
- Connect:
  Controller Connector [A]
  Hand Tester [B] (range: DC 10 V)
  Tester (+) → Connector (P) Terminal [5]
  Tester (–) → Connector (BK/Y) Terminal [10]

○Install the needle adapters on the tester leads.

Special Tools - Hand Tester: 57001-1394
Needle Adapter Set: 57001-1457

- Turn ON the ignition switch.
- Measure the controller output voltage for the speed sensor.

Controller Output Voltage (to speed sensor)
Standard: 5 ±0.25 V

★If the reading is not standard, replace the actuator controller unit.

Actuator Control System

- Disconnect the 2WD/4WD shift switch lead connector.
- Connect:
  Controller Connector [A]
  Hand Tester [B] (range: DC 10 V)
  Tester (+) → Connector (G) Terminal [7]
  Tester (–) → Connector (BK/Y) Terminal [10]

○Install the needle adapters on the tester leads.

Special Tools - Hand Tester: 57001-1394
Needle Adapter Set: 57001-1457

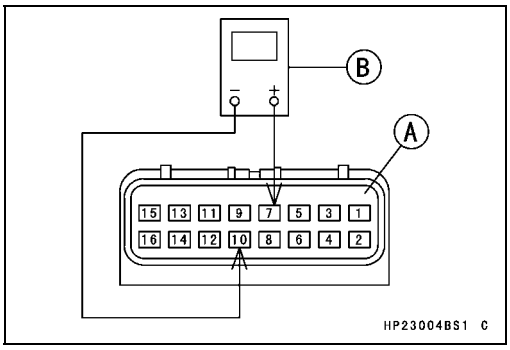

- Turn ON the ignition switch.
- Measure the controller output voltage for the 2WD/4WD shift switch.

Controller Output Voltage (to 2WD/4WD shift switch)
Standard: 5 ±0.25 V

★If the reading is not standard, replace the actuator controller unit.

- Support the vehicle on a stand or a jack so that the wheels are off the ground.
- Connect:
  Controller Connector [A]
  Hand Tester [B] (range: DC 25 V)
  Tester (+) → Connector (W/R) Terminal [15]
  Tester (–) → Connector (BK/Y) Terminal [10]

○Install the needle adapters on the tester leads.

Special Tools - Hand Tester: 57001-1394
Needle Adapter Set: 57001-1457

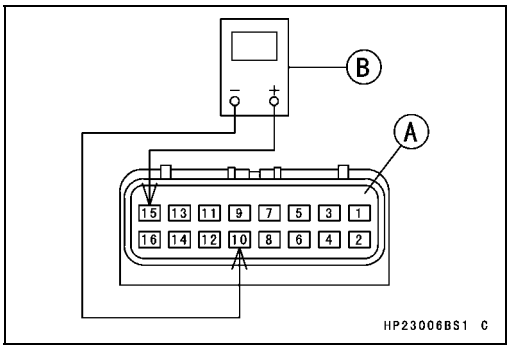

- Turn ON the ignition switch.
- Spin a rear wheel as forward rotation.
- After the wheels stop and one second elapses, turn OFF the ignition switch.
- After two seconds elapses, measure the controller output voltage for the engine brake actuator until the actuator stops.

Controller Output Voltage (to engine brake actuator)
Standard: 5 ~ 12 V

★If the reading is not standard, check the forward/reverse detecting sensor.
★If the forward/reverse detecting sensor is normal, replace the actuator controller unit.

- Support the vehicle on a stand or a jack so that the wheels are off the ground.
- Run the engine and shift to the 4WD position.
- Stop the engine and turn OFF the ignition switch.
- Connect:
  Controller Connector [A]
  Hand Tester [B] (range: DC 25 V)
  Tester (+) → Connector (W/Y) Terminal [13]
  Tester (–) → Connector (BK/Y) Terminal [10]

○Install the needle adapters on the tester leads.

Special Tools - Hand Tester: 57001-1394
Needle Adapter Set: 57001-1457

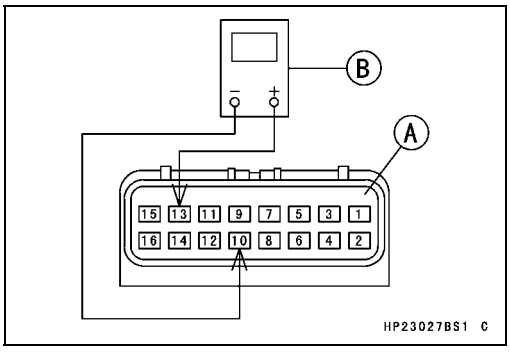

- Turn ON the ignition switch.
- Shift to the 2WD position.
- Measure the controller output voltage for the 2WD/4WD actuator until the actuator stops.

Controller Output Voltage (to 2WD/4WD actuator)
Standard: 5 ~ 12 V

★If the reading is not standard, check the 2WD/4WD shift switch.
★If the 2WD/4WD shift switch is normal, replace the actuator controller unit.

Check 7. Forward/Reverse Detecting Sensor Inspection

- Disconnect forward/reverse detecting sensor lead connector [A].
- Measure the forward/reverse detecting sensor resistance.

○Connect the hand tester between the BK lead and the W lead.
○Set the tester to the × kΩ range.

Special Tool - Hand Tester: 57001-1394

Forward/Reverse Detecting Sensor Resistance
Standard: 1.2 ~ 1.6 kΩ

★If the reading is not within the specified range, replace the forward/reverse detecting sensor.

- Using the highest resistance, measure the resistance between forward/reverse detecting sensor leads and chassis ground.

★If the tester reading is less than infinity (∞) indicates a short, replace the forward/reverse detecting sensor.

Check 8. Indicator Light (LCD) Inspection

- Refer to Check 7: 2WD/4WD Indicator Lights Check in Multifunction Meter Unit Inspection.

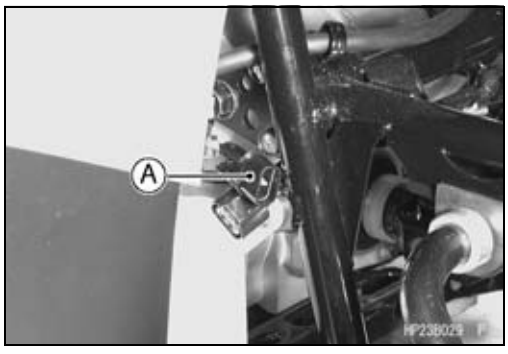

Actuator Control System

Actuator Control System Circuit

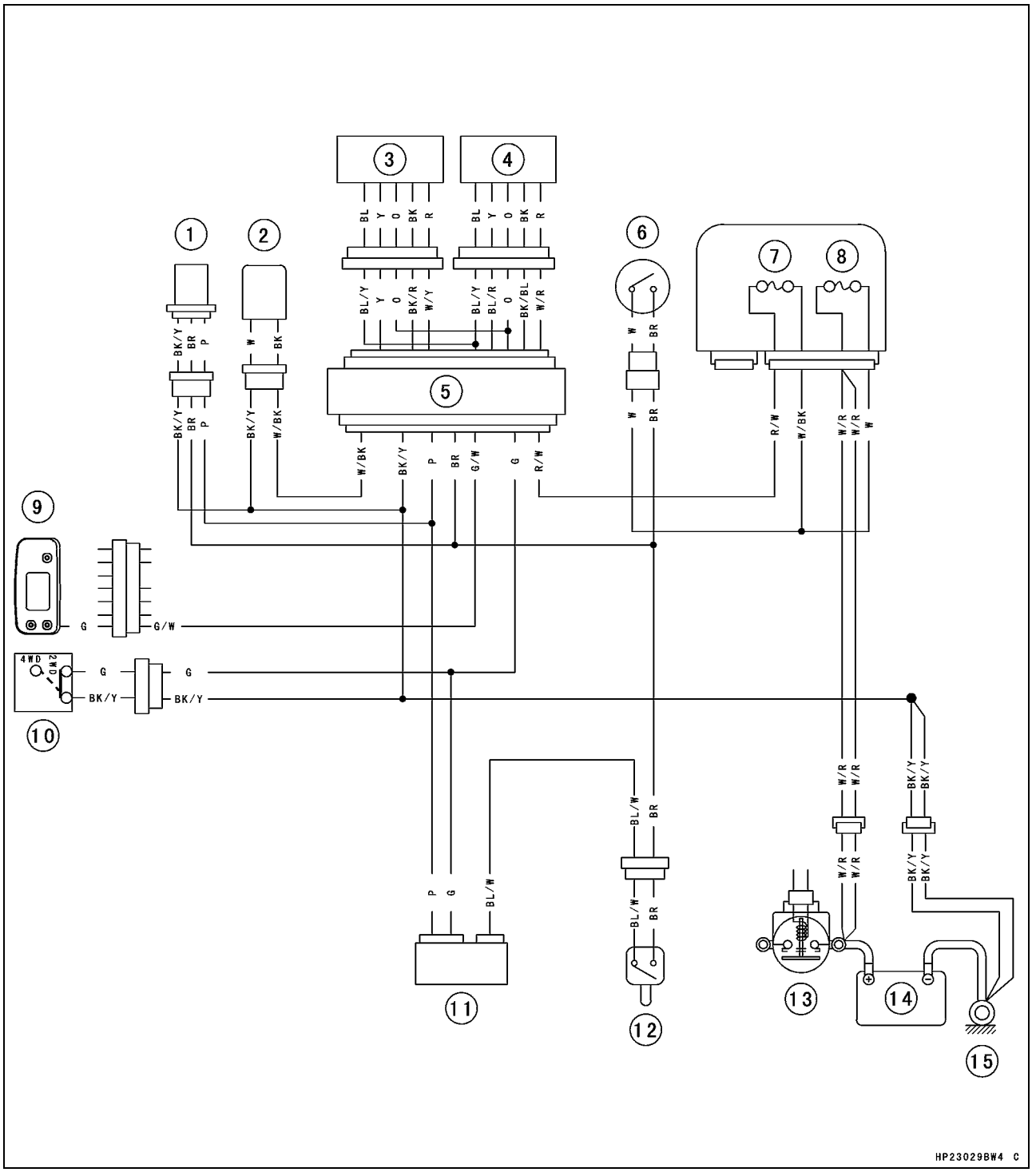

1. Speed Sensor
2. Forward/Reverse Detecting Sensor
3. 2WD/4WD Actuator
4. Engine Brake Actuator
5. Actuator Controller
6. Ignition Switch
7. Controller Fuse 10 A
8. Main Fuse 30 A
9. Multifunction Meter
10. 2WD/4WD Shift Switch
11. Igniter
12. Drive Belt Failure Detection Switch
13. Starter Relay
14. Battery
15. Engine Ground Terminal

Drive Belt Failure Detection System

If the drive belt failure detection system activated by abnormal belt, the drive belt failure detection switch is damaged. Make sure replace the torque converter cover (see Torque Converter Cover Removal/Installation in the Converter System chapter).

Drive Belt Failure Detection System Inspection

- Refer to the Drive Belt Failure Detection System Inspection in the Periodic Maintenance chapter.

Drive Belt Failure Detection System Circuit

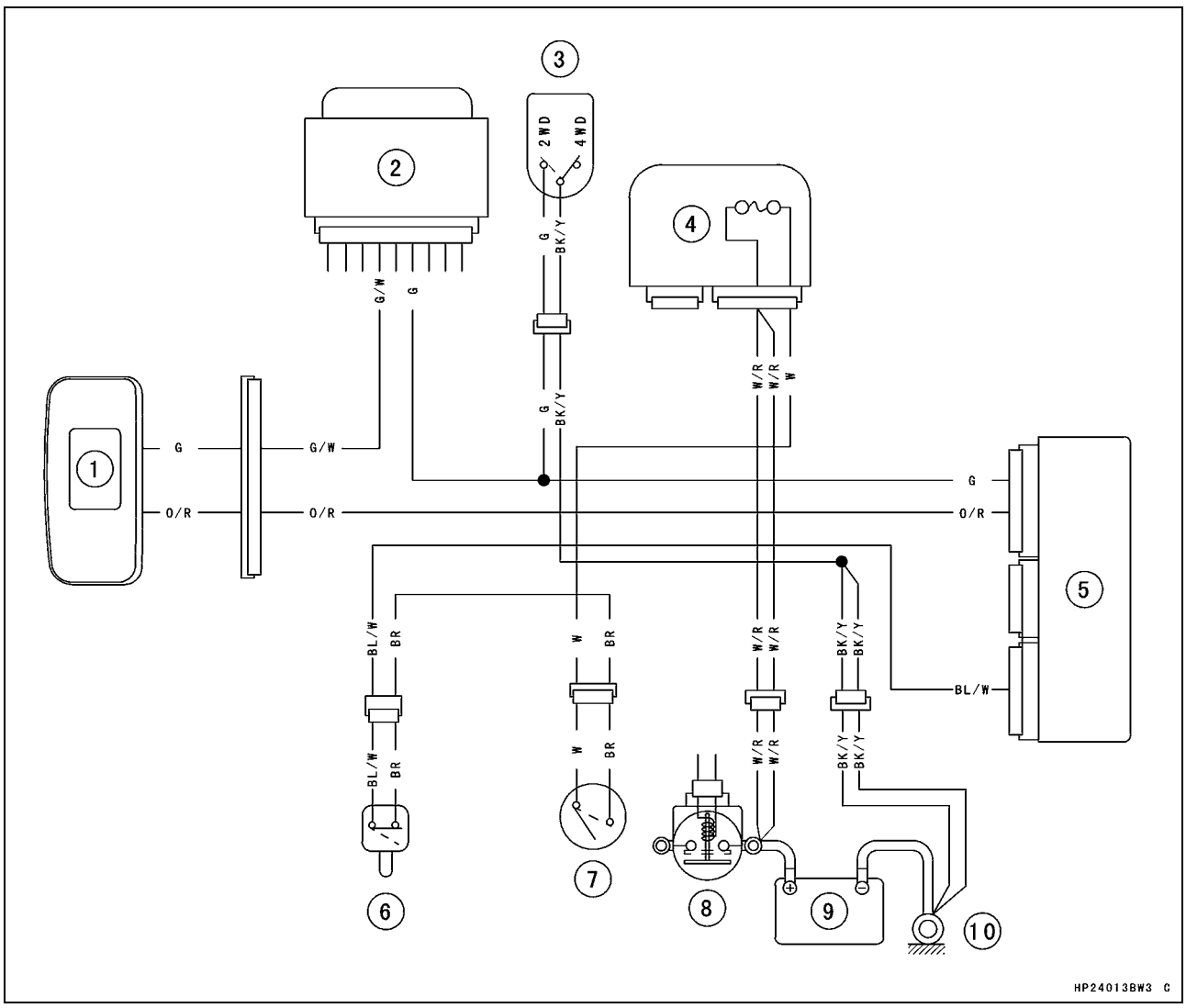

1. Multifunction Meter
2. Actuator Controller
3. 2WD/4WD Shift Switch
4. Main Fuse 30 A
5. Igniter
6. Drive Belt Failure Detecting Switch
7. Ignition Switch
8. Starter Relay
9. Battery
10. Engine Ground Terminal

Carburetor Heater System

Air Temperature Sensor Inspection

- Remove:
  Air Cleaner Housing (see Air Cleaner Housing Removal in the Fuel System chapter)
  Air Temperature Sensor [A]

- Connect the battery [A] and hand tester [B] to the sensor lead connector [C].

  Special Tool - Hand Tester: 57001-1394

  Battery
  (+) → Red and Yellow Leads
  (−) → Black Lead

  Hand Tester
  (+) → White Lead
  (−) → Black Lead

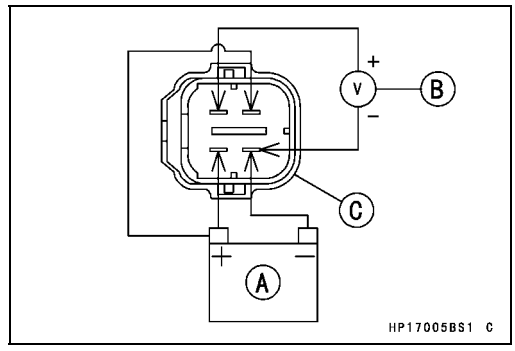

CAUTION
Use the sensor within −30 ~ 80°C (−22 ~ 176°F). If it is used without the specified range, the sensor will be damaged.

- Suspend the sensor [A] in a container of cold water of less than 8°C (46.4°F) so that the temperature sensing part [B] is submerged as shown.
  [C] Ice
- Suspend an accurate thermometer [D] in the water.
- Measure the output voltage between W/Y terminal and battery (–) terminal (tester range: DC 25 V).

  Air Temperature Sensor: less than 8°C (46.4°F)
  Output Voltage: 8 ~ 16 V (near battery voltage)

★If the voltage is less than DC 0.1 V, replace the sensor.

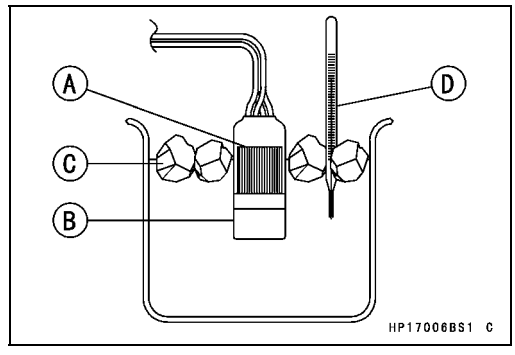

- Warm up the sensor [A] more than 22°C (71.6°F) with a hand.
- Measure the output voltage between W/Y terminal and battery (–) terminal (tester range: DC 2.5 V).

  Air Temperature Sensor: more than 22°C (71.6°F)
  Output Voltage: less than 0.1 V

★If the voltage is 8 ~ 16 V, replace the sensor.

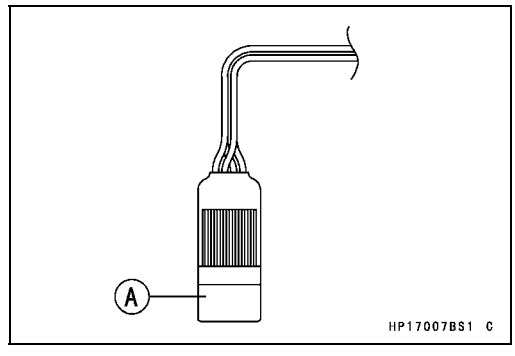

Carburetor Heater System

Carburetor Heater Inspection

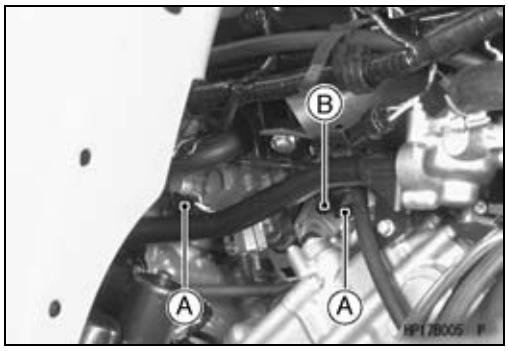

- Disconnect:
  Carburetor Heater Lead Connectors [A]
  Ground Lead Connector [B]
- Using the hand tester, measure the resistance of the heater.
- Connect the tester between the heater terminal and the ground terminal.

★If the tester does not read as specified, replace the heater.

Carburetor Heater Resistance
11 ~ 20 Ω

Carburetor Heater System Circuit

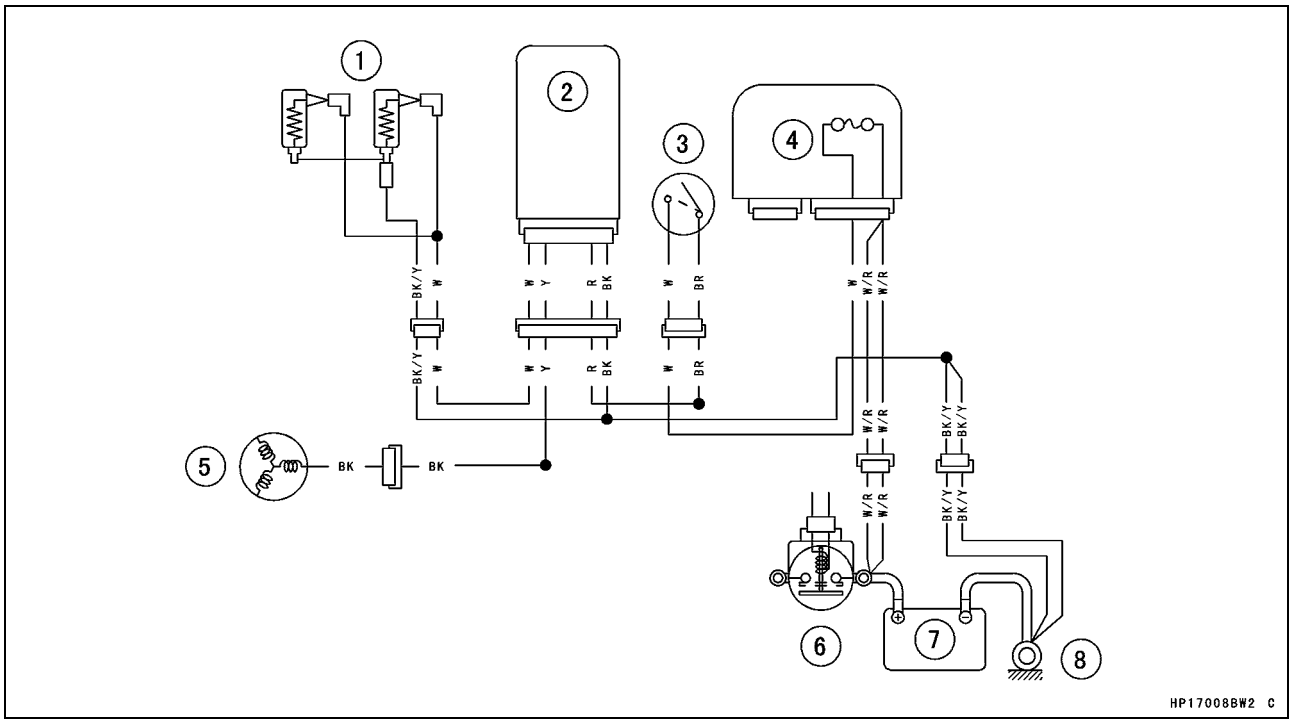

1. Carburetor Heaters 12 V 23 W
2. Air Temperature Sensor
3. Ignition Switch
4. Main Fuse 30 A
5. Alternator
6. Starter Relay
7. Battery
8. Engine Ground Terminal

Switches and Sensor

Fuel Level Sensor Removal

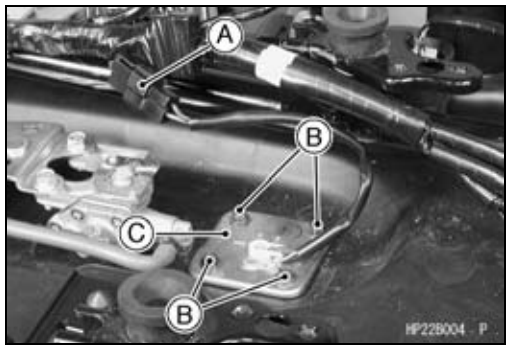

- Remove:
  Seat (see Seat Removal in the Frame chapter)
  Electrical Parts Case (see Electrical Parts Case Removal in the Frame chapter)
  Fuel Level Sensor Lead Connector [A]
  Fuel Level Sensor Mounting Bolts [B]
  Fuel Level Sensor [C]

Fuel Level Sensor Installation

- Install:
  New Gasket
  Fuel Level Sensor
- Tighten:

Torque - Fuel Level Sensor Mounting Bolts: 2.0 N·m (0.20 kgf·m, 18 in·lb)

Fuel Level Sensor Inspection

- Remove:
  Fuel Level Sensor (see Fuel Level Sensor Removal)
- Check that the float moves up and down smoothly without binding. It should go down under its own weight.

★If the float does not move smoothly, replace the fuel pump assembly.

- Using a hand tester [A], measure the resistance across the terminals in the fuel pump lead connector [B].

Special Tool - Hand Tester: 57001-1394

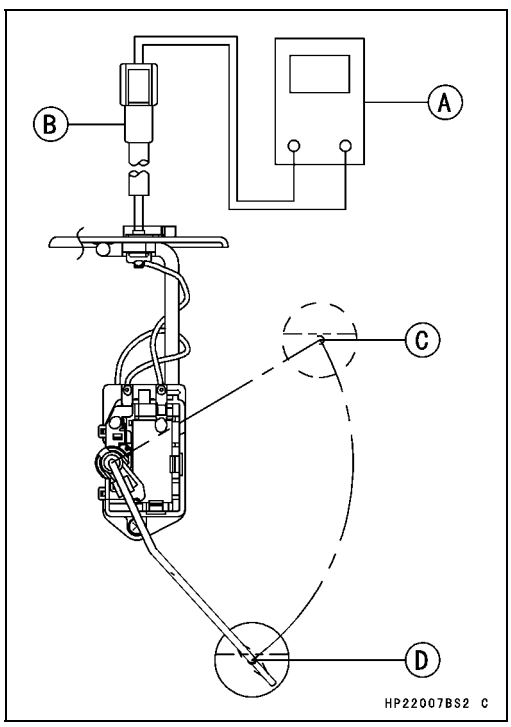

NOTE

○*In contrast to the normal measuring method, the current that flows through the gauge when measuring it with a tester is very low, thus making the measurement easily affected by the oxidized film of the resistance plate, and resulting in excessive resistance. Therefore, make sure to wipe the resistance plate with alcohol before taking a measurement.*

★If the readings are not as specified, replace the fuel pump assembly.

Fuel Level Sensor Resistance
Standard: Full Level Position [C]: 3 Ω
Empty Level Position [D]: 120 Ω

Switches and Sensor

Fuel Level Sensor Circuit

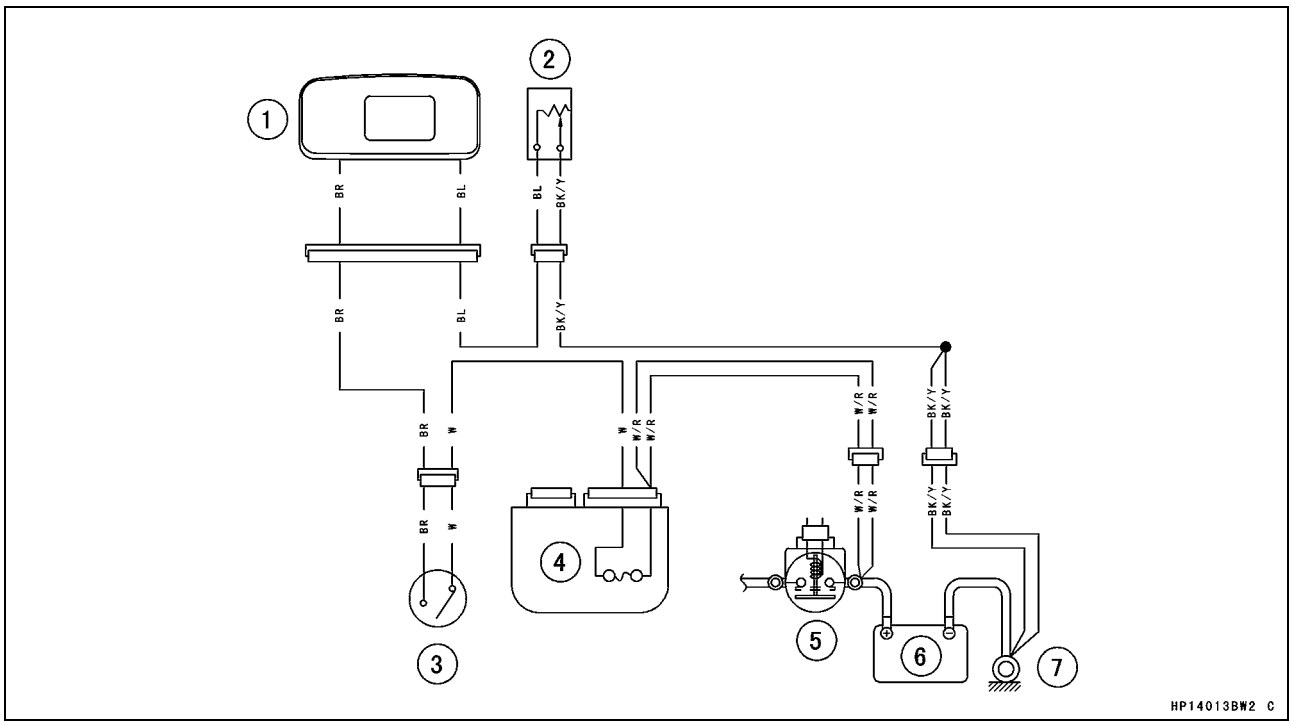

1. Multifunction Meter
2. Fuel Level Sensor
3. Ignition Switch
4. Main Fuse 30 A
5. Starter Relay
6. Battery
7. Engine Ground Terminal

Brake Light Switch Adjustment

- Refer to the Brake Light Switch Inspection and Adjustment in the Periodic Maintenance chapter.

Radiator Fan Switch Inspection

- Remove:
  Radiator Fan Switch (see Radiator Fan Switch Removal in the Cooling System chapter)
- Suspend the fan switch [A] in a container of coolant so that the temperature sensing projection and threaded portion are submerged.
- Suspend an accurate thermometer [B] in the coolant.

NOTE

○*The switch and thermometer must not touch the container sides or bottom.*

- Place the container over a source of heat and gradually raise the temperature of the coolant while stirring the coolant gently.
- Using the hand tester, measure the internal resistance of the switch across the terminals at the temperatures shown in the table.

★If the hand tester does not show the specified values, replace the switch.

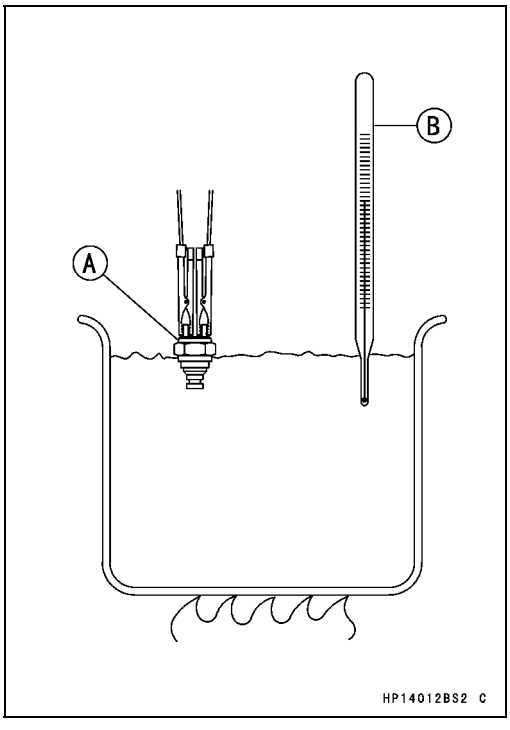

Switches and Sensor

Radiator Fan Switch Resistance

○**Rising Temperature:**

From OFF to ON at 96 ~ 100°C (205 ~ 212°F)

○**Falling Temperature:**

From ON to OFF at 91 ~ 95°C (196 ~ 203°F)

ON: Less than 0.5 Ω

OFF: More than 1 MΩ

- Install:
  Radiator Fan Switch

Torque - Radiator Fan Switch: 18 N·m (1.8 kgf·m, 13 ft·lb)

Water Temperature Switch Inspection

- Remove:
  Water Temperature Switch (see Water Temperature Switch Removal in the Cooling System chapter)
- Suspend the switch [A] in a container of coolant so that the temperature sensing projection and threaded portion are submerged.
- Suspend an accurate thermometer [B] in the coolant.

NOTE

○*The switch and thermometer must not touch the container sides or bottom.*

- Place the container over a source of heat and gradually raise the temperature of the coolant while stirring the coolant gently.
- Using the hand tester, measure the internal resistance of the switch across the connector and the body at the temperatures shown in the table.

★If the hand tester does not show the specified values, replace the switch.

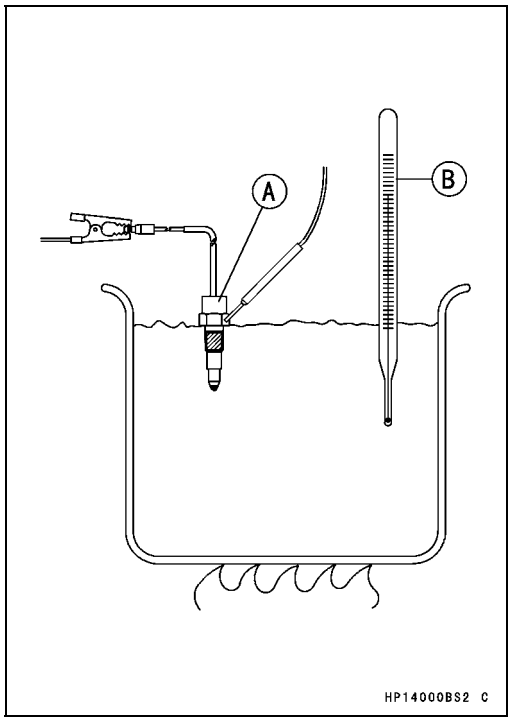

Water Temperature Switch Resistance

○**Rising Temperature:**

From OFF to ON at 112 ~ 118°C (234 ~ 244°F)

○**Falling Temperature:**

From ON to OFF at 108 ~ 111°C (226 ~ 232°F)

ON: Less than 0.5 Ω

OFF: More than 1 MΩ

- Install:
  Water Temperature Switch

Torque - Water Temperature Switch: 6.9 N·m (0.70 kgf·m, 61 in·lb)

Sealant - Kawasaki Bond (Silicone Sealant): 56019-120

Switches and Sensor

Speed Sensor Removal/Installation

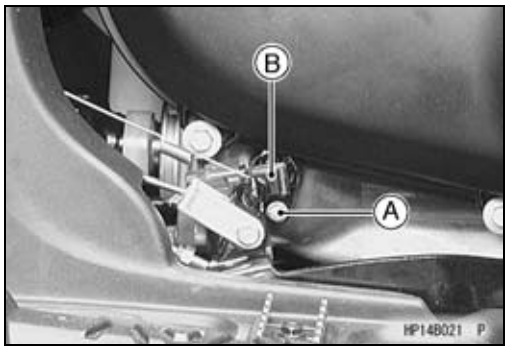

- Drain the engine oil (see Engine Oil Change in the Periodic Maintenance Chapter).
- Remove:
  Right Footboard (see Right Footboard Removal in the Frame chapter)
  Bolts [A]
  Speed Sensor [B]
- Disconnect the speed sensor Connector [C].
- Replace the O-ring with a new one.
- Apply grease to the O-ring
- Tighten:

Torque - Speed Sensor Mounting Bolt: 8.8 N·m (0.90 kgf·m, 78 in·lb)

Speed Sensor Inspection

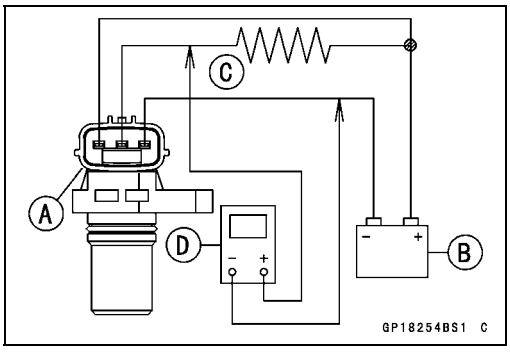

- Remove the speed sensor (see Speed Sensor Removal).
- Connect the speed sensor connector [A] with the battery [B], 10 kΩ resistor [C] and hand tester [D] as shown.
- Set the tester to the DC 25 V range.

Special Tool - Hand Tester: 57001-1394

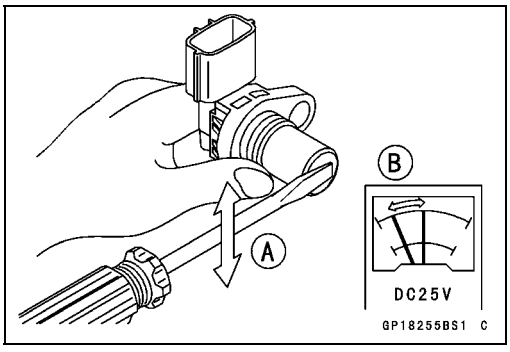

- Trace [A] each side of the speed sensor surface with the screw driver.

○Then the tester indicator should flick [B].

★If the tester indicator does not flick, replace the speed sensor.

Switch Inspection

- Using the hand tester, check to see that only the connections shown in the table have continuity (about zero ohms).

○For the handlebar switches, ignition switch, refer to tables in the Wiring Diagram.

★If the switch has an open or short, repair or replace it with a new one.

Switches and Sensor

Neutral Switch Connection

	G	BK
When side stand is up	○	○
When side stand is down		

[A] Neutral Switch

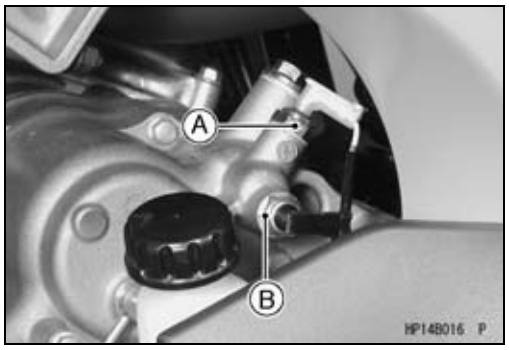

Reverse Switch Connections

	SW.Terminal	⏚
When transmission is in reverse	○	○
When transmission is not in reverse		

[B] Reverse Switch

2WD/4WD Shift Switch

	G	BK/Y
2WD Position	○	○
4WD Position		

Oil Pressure Switch Connections*

	SW. Terminal	⏚
When engine is stopped	○	○
When engine is running		

*: Engine lubrication system is in good condition

Drive Belt Failure Detection Switch Inspection

If the drive belt failure detection system is activated by abnormal belt, the drive belt failure detection switch is damaged. Make sure to replace the torque converter cover (see Torque Converter Cover Removal/Installation in the Converter System chapter).

- Remove:
  Torque Converter Cover (see Torque Converter Cover Removal in the Converter System chapter)

	BR	BL/W
When drive belt failure detection switch is in ON position	○	○
When drive belt failure detection switch is in OFF position		

[A] Drive Belt Failure Detection Switch

★If the switch has an open or short, repair or replace it with a new one.

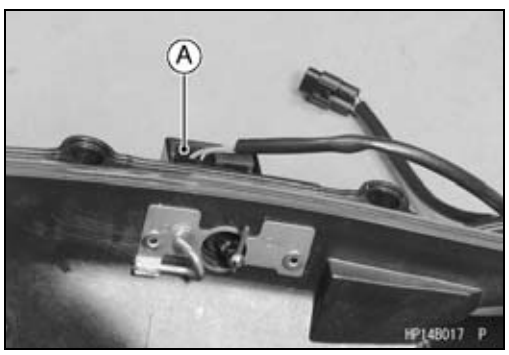

Fuses

Fuse Removal

- Remove:
  Seat (see Seat Removal in the Frame chapter)
  Fuse Box Lid [A]

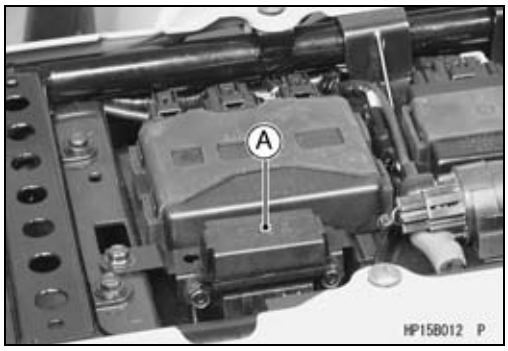

- Pull the fuses [A] straight out of the fuse box with needle nose pliers.

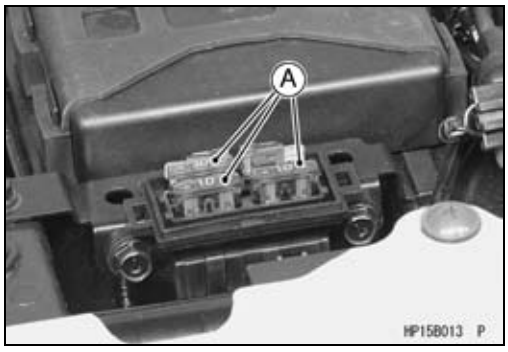

Fuse Installation

★If a fuse fails during operation, inspect the electrical system to determine the cause, and then replace it with a new fuse of proper amperage.

- Install the fuses on the original position as specified on the fuse box lid [A].

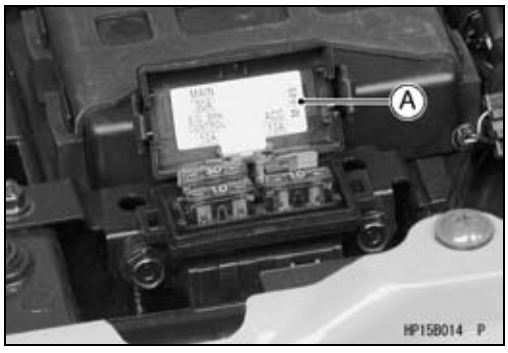

Fuse Inspection

- Inspect the fuse element.

★If it is blown out, replace the fuse. Before replacing a blown fuse, always check the amperage in the affected circuit. If the amperage is equal to or greater than the fuse rating, check the wiring and related components for a short circuit.
  Housing [A]
  Fuse Element [B]
  Terminals [C]
  Blown Element [D]

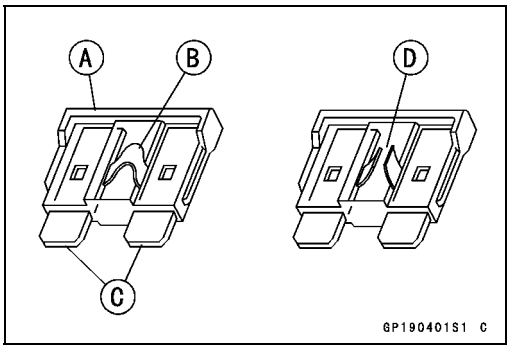

CAUTION
When replacing a fuse, be sure the new fuse matches the specified fuse rating for that circuit. Installation of a fuse with a higher rating may cause damage to wiring and components.

Appendix

Table of Contents

Troubleshooting Guide

NOTE

○*This is not an exhaustive list, giving every possible cause for each problem listed. It is meant simply as a rough guide to assist the troubleshooting for some of the more common difficulties.*

Engine Doesn't Start, Starting Difficulty:

Starter motor not rotating:
- Neutral switch trouble
- Starter motor trouble
- Battery voltage low
- Relays not contacting or operating
- Starter button not contacting
- Wiring open or shorted
- Ignition switch trouble
- Engine stop switch trouble
- Fuse blown

Starter motor rotating but engine doesn't turn over:
- Starter motor clutch trouble

Recoil starter not operating
- Recoil starter spring broken
- Recoil starter pawl not engaging

Engine won't turn over:
- Valve seizure
- Rocker arm seizure
- Cylinder, piston seizure
- Crankshaft seizure
- Connecting rod small end seizure
- Connecting rod big end seizure
- Transmission gear or bearing seizure
- Camshaft seizure

No fuel flow:
- Fuel tank air vent obstructed
- Fuel tap clogged
- Fuel line clogged
- Float valve clogged
- Fuel pump damaged or circuit open/short

Engine flooded:
- Fuel level too high
- Float valve worn or stuck open
- Starting technique faulty
- (When flooded, crank the engine with the throttle fully opened to allow more air to reach the engine.)

Fuel/air mixture incorrect:
- Pilot screw and/or idle adjusting screw maladjusted
- Pilot jet or air passage clogged
- Air cleaner clogged, poorly sealed, or missing
- Starter jet clogged

No spark; spark weak:
- Spark plug dirty, broken, or maladjusted
- Spark plug cap or spark plug lead trouble
- Spark plug cap not in good contact
- Spark plug incorrect
- Crankshaft sensor trouble
- Igniter trouble
- Ignition coil trouble
- Battery voltage low
- Ignition or engine stop switch shorted
- Wiring shorted or open
- Fuse blown

Compression Low:
- Spark plug loose
- Cylinder head not sufficiently tightened down
- No valve clearance
- Cylinder, piston worn
- Piston ring bad (worn, weak, broken, or sticking)
- Piston ring/groove clearance excessive
- Cylinder head gasket damaged
- Cylinder head warped
- Valve spring broken or weak
- Valve not seating properly (valve bent, worn, or carbon accumulation on the seating surface)
- Compression release (KACR) cam sticks open (Engine stalls when moving off)

Poor Running at Low Speed:

Spark weak:
- Spark plug dirty, broken, or maladjusted
- Spark plug cap or spark plug lead trouble
- Spark plug cap shorted or not in good contact
- Spark plug incorrect
- Igniter trouble
- Crankshaft sensor trouble
- Ignition coil trouble
- Battery voltage low

Fuel/air mixture incorrect:
- Pilot screw and/or idle adjusting screw maladjusted
- Pilot jet or air passage clogged
- Choke plunger stuck open
- Air cleaner clogged, poorly sealed, or missing
- Fuel level too high or too low
- Fuel tank air vent obstructed
- Carburetor holder loose
- Air cleaner duct loose

Compression low:
- Spark plug loose
- Cylinder head not sufficiently tightened down
- No valve clearance
- Cylinder, piston worn
- Piston ring bad (worn, weak, broken, or sticking)
- Piston ring/groove clearance excessive
- Cylinder head gasket damaged

Cylinder head warped
Valve spring broken or weak
Valve not seating properly (valve bent, worn, or carbon accumulation on the seating surface)
Compression release (KACR) cam sticks open (Engine stalls when moving off)

Other:
Carburetor vacuum piston doesn't slide smoothly
Engine oil viscosity too high
Brake dragging
Igniter trouble
Front or rear final gear case oil viscosity too high

Poor Running or No Power at High Speed:

Firing incorrect:
Spark plug dirty, broken, or maladjusted
Spark plug cap or spark plug lead trouble
Spark plug cap shorted or not in good contact
Spark plug incorrect
Crankshaft sensor trouble
Igniter trouble
Ignition coil trouble
Drive belt failure detection switch activated

Fuel/air mixture incorrect:
Main jet clogged or wrong size
Jet needle or needle jet worn
Main air jet clogged
Bleed holes of air bleed pipe or needle jet clogged
Fuel level too high or too low
Air cleaner clogged, poorly sealed, or missing
Choke plunger stuck open
Water or foreign matter in fuel
Carburetor holder loose
Air cleaner duct loose
Fuel tank air vent obstructed
Fuel tap clogged
Fuel line clogged

Compression low:
Spark plug loose
Cylinder head not sufficiently tightened down
No valve clearance
Cylinder, piston worn
Piston rings bad (worn, weak, broken, or sticking)
Piston ring/groove clearance excessive
Cylinder head gasket damaged
Cylinder head warped
Valve spring broken or weak
Valve not seating properly (valve bent, worn, or carbon accumulation on the seating surface.)
Compression release cam (K.A.C.R.) sticks open (Engine stalls when moving off)

Knocking:
Carbon built up in combustion chamber
Fuel poor quality or incorrect
Spark plug incorrect
Igniter trouble

Miscellaneous:
Throttle valve won't fully open
Carburetor vacuum piston doesn't slide smoothly
Brake dragging
Overheating
Engine oil level too high
Engine oil viscosity too high
Front or rear final gear case oil viscosity too high

Overheating:

Firing incorrect:
Spark plug dirty, broken, or maladjusted
Spark plug incorrect
Igniter trouble

Fuel/air mixture incorrect:
Main jet clogged
Fuel level too low
Carburetor holder loose
Air cleaner poorly sealed, or missing
Air cleaner duct loose
Air cleaner clogged

Compression high:
Carbon built up in combustion chamber

Engine load faulty:
Engine oil level too high
Engine oil viscosity too high
Drive train trouble
Brake dragging

Lubrication inadequate:
Engine oil level too low
Engine oil poor quality or incorrect

Front or rear final gear case overheating:
Insufficient oil
Bevel gears maladjusted
LSD clutches in front final gear case maladjustment

Coolant incorrect:
Coolant level too low
Coolant deteriorated
Thick coolant

Cooling system component incorrect:
Radiator clogged
Thermostat trouble
Radiator cap trouble
Radiator fan switch trouble
Fan motor broken
Fan blade damaged
Water pump not turning
Water pump impeller damaged

Troubleshooting Guide

Over Cooling:
- **Cooling system component incorrect:**
  - Radiator fan switch trouble
  - Thermostat trouble

Converter Operation Faulty:
- **Belt slipping:**
  - Belt dirty, worn, or wetted
  - Drive or driven pulley sheave dirty or worn
  - Drive pulley spring broken or weak
- **Converter engagement speed too low:**
  - Drive pulley spring broken or weak
- **Converter engagement speed too high:**
  - Belt dirty or worn
  - Drive or driven pulley sheave dirty or worn
  - Drive pulley weight doesn't move smoothly
  - Drive pulley movable sheave doesn't move smoothly
  - Drive or driven pulley movable sheave bush worn
  - Drive pulley weight or roller worn
- **Shifting too quickly:**
  - Drive pulley spring weak
  - Driven pulley spring weak or incorrectly installed (too loose)
- **Shifting too slowly:**
  - Belt dirty or worn
  - Drive or driven pulley sheave dirty or worn
  - Drive pulley weight doesn't move smoothly
  - Drive pulley movable sheave doesn't move smoothly
  - Drive pulley spring incorrect installed (too tight)
  - Driven pulley movable sheave doesn't move smoothly

Gear Shifting Faulty:
- **Doesn't go into gear:**
  - Shift arm bent or seized
  - Gear stuck on the shaft
  - Shift tie-rod maladjusted
  - Shift tie-rod damaged
- **Jumps out of gear:**
  - Shifter groove worn
  - Gear dogs worn
  - Shift block worn
  - Shift arm positioning bolt spring weak or broken
  - Shift tie-rod maladjusted
  - Drive shaft, output shaft, and/or gear splines worn
- **Overshifts:**
  - Shift arm positioning bolt spring weak or broken
  - Shift tie-rod maladjusted

Abnormal Engine Noise:
- **Knocking:**
  - Igniter trouble
  - Carbon built up in combustion chamber
  - Fuel poor quality or incorrect
  - Spark plug incorrect
  - Overheating
- **Piston Slap:**
  - Cylinder/piston clearance excessive
  - Cylinder, piston worn
  - Connecting rod bent
  - Piston pin, piston holes worn
- **Valve noise:**
  - Valve clearance incorrect
  - Valve spring broken or weak
  - Camshaft bearing worn
  - Rocker arm worn
- **Other noise:**
  - Connecting rod small end clearance excessive
  - Connecting rod big end clearance excessive
  - Piston ring worn, broken, or stuck
  - Piston seizure, damage
  - Cylinder head gasket leaking
  - Exhaust pipe leaking at cylinder head connection
  - Crankshaft runout excessive
  - Engine mounts loose
  - Crankshaft bearing worn
  - Camshaft chain tensioner trouble
  - Camshaft chain, sprocket, guides worn
  - Loose alternator rotor

Abnormal Drive Train Noise:
- **Converter noise:**
  - Belt worn
  - Drive or driven pulley sheave worn
  - Drive or driven pulley movable sheave bush worn
  - Drive or driven pulley mount loose
  - Driven pulley shoe worn
  - Drive pulley weight or roller side washer worn
  - Drive pulley weight or roller worn
  - Wear guides worn
- **Transmission noise:**
  - Bearing worn
  - Transmission gears worn or chipped
  - Metal chips jammed in gear teeth
  - Engine oil insufficient or too thin
- **Front or rear final gear case noise:**
  - Insufficient lubricant
  - Incorrect oil (Front final gear case)
  - Bevel gear bearings worn
  - Bevel gears worn or chipped
  - Bevel gears maladjusted
  - Worn LSD clutch friction plate (Front final gear case)
  - Thrust plug maladjusted (Rear final gear case)

Troubleshooting Guide

Damaged side gears or pinions (Front final gear case)

Abnormal Frame Noise:

Shock absorber noise:
Shock absorber damaged

Disc brake noise:
Pad installed incorrectly
Pad surface glazed
Disc warped
Caliper trouble

Rear brake noise:
Foreign matter in hub
Brake not properly adjusted

Other noise:
Bracket, nut bolt, etc. not properly mounted or tightened

Exhaust Smokes Excessively:

White smoke:
Piston oil ring worn
Cylinder worn
Valve oil seal damaged
Valve guide worn
Cylinder head gasket damaged
Engine oil level too high

Black Smoke:
Air cleaner clogged
Main jet too large or fallen off
Choke plunger stuck open
Fuel level too high

Brown smoke:
Main jet too small
Fuel level too low
Air cleaner duct loose
Air cleaner poorly sealed or missing

Handling and/or Stability Unsatisfactory

Handlebar hard to turn:
Tire air pressure too low
Steering stem bearing damaged
Steering stem bearing lubrication inadequate
Steering stem bent
Damaged steering knuckle joint
Damage tie-rod end
LSD clutch maladjusted (front final gear case)

Noise when turning:
Damaged side gear or pinion (front final gear case)
Worn LSD clutch friction plates (Front final gear case)

Handlebar shakes or excessively vibrates:
Tire worn
Wheel rim warped
Rear axle runout excessive
Wheel bearing worn
Handlebar clamp loose
Steering stem clamp bolt loose

Handlebar pulls to one side:
Frame bent
Wheel maladjustment
Suspension arm bent or twisted
Steering stem bent
Front or rear tire air pressure unbalanced
Front shock absorber unbalanced

Shock absorption unsatisfactory:

Too hard:
Tire air pressure too high
Shock absorber maladjusted

Too soft:
Shock absorber oil leaking
Shock absorber spring weak
Tire air pressure too low
Shock absorber maladjusted

Brake Doesn't Hold

Front brake:
Air in the brake line
Brake fluid leakage
Brake fluid deteriorated
Primary or secondary cup trouble
Master cylinder scratched inside
Pad overworn or worn unevenly
Oil, grease on pads and disc
Disc worn or warped
Brake overheated

Rear Brake:
Brake not properly adjusted
Plates worn
Brake parts worn or damaged

Kawasaki Engine Brake Control and Selectable 2WD/4WD System Malfunction:
Actuators failed
Speed sensor short or open
Forward/Reverse detecting sensor short or open
Actuator controller failed
Controller 10A fuse blown
Battery disconnected

Troubleshooting Guide

Battery Discharged:

- Battery faulty (e.g., plates sulphated, shorted through sedimentation, electrolyte level too low)
- Battery leads making poor contact
- Load excessive (e.g., bulb of excessive wattage)
- Ignition switch trouble
- Regulator/rectifier trouble
- Alternator trouble
- Wiring faulty

Battery Overcharged:

- Regulator/rectifier trouble
- Battery trouble

Cable, Wire, and Hose Routing

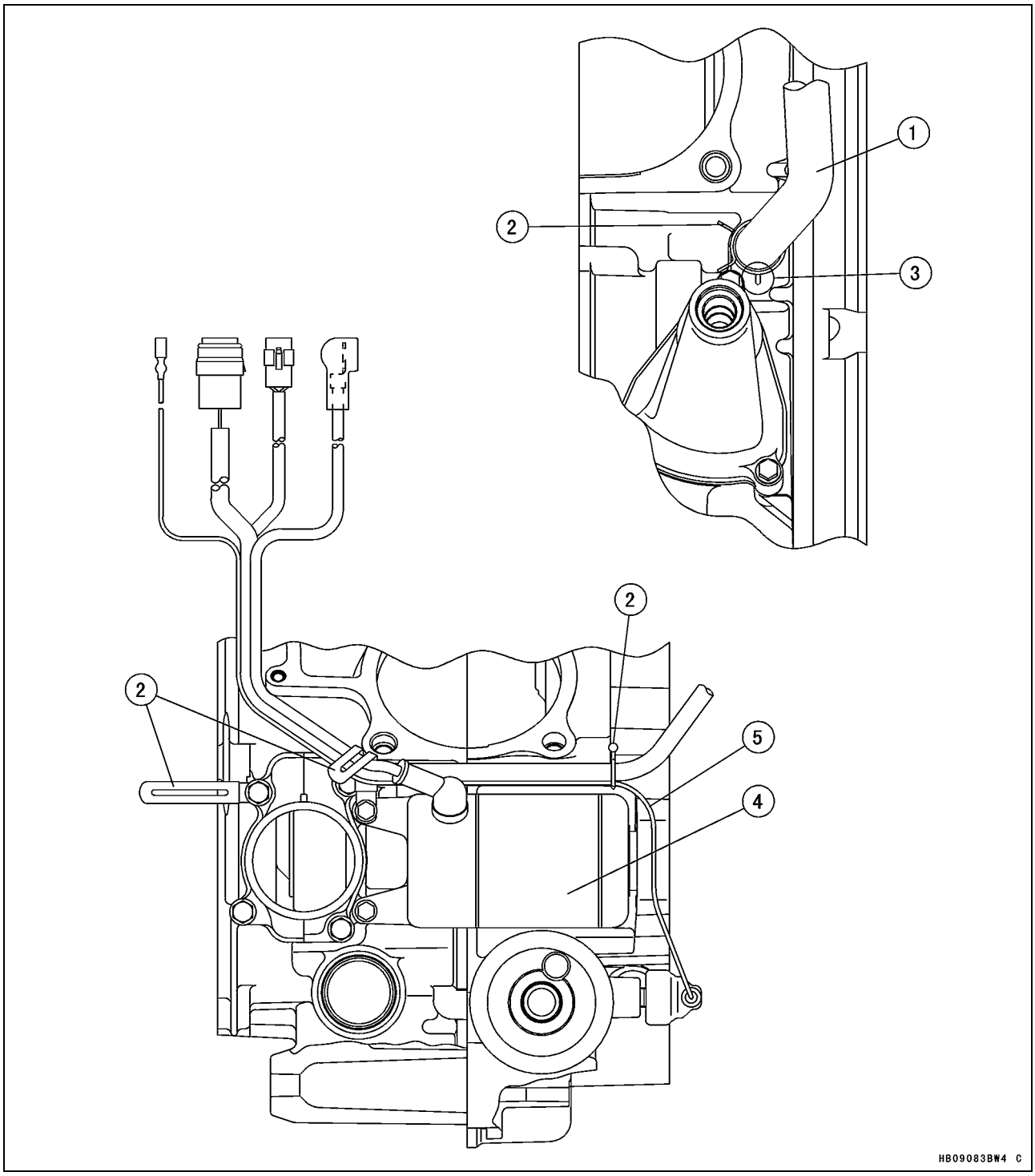

1. Engine Breather Hose
2. Clamps
3. Align the white paint mark on the hose with the adjustment mark on the crankcase.
4. Starter Motor
5. Install the oil pressure switch lead not to interfere with the starter motor.

Cable, Wire, and Hose Routing

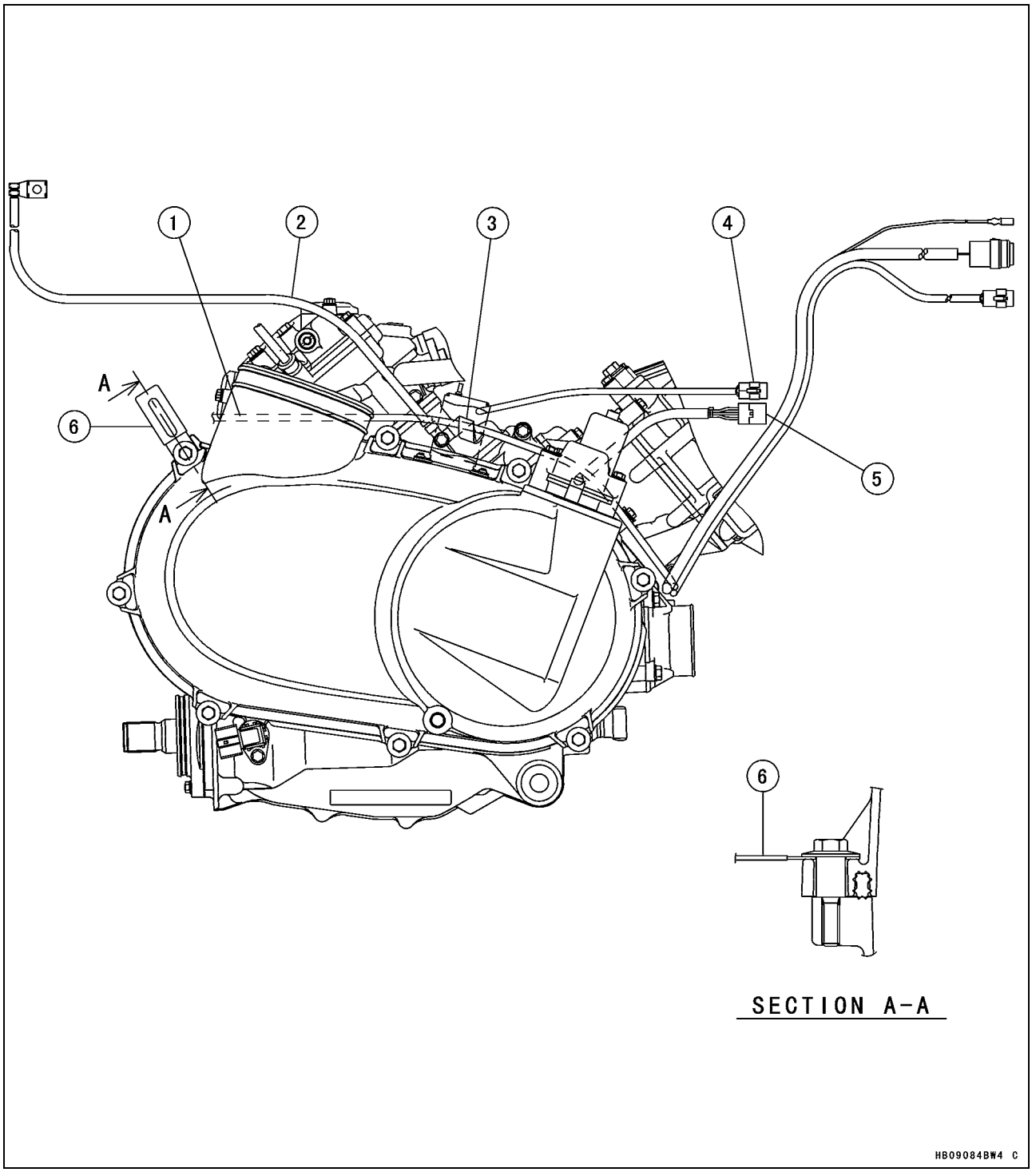

1. Starter Motor Lead
2. Engine Ground Lead (Install the lead so that the flat side of the lower terminal faces toward the engine.)
3. Install the clamp on the engine ground lead terminal.
4. Drive Belt Failure Detecting Switch Lead Connector
5. Engine Brake Actuator Lead Connector
6. Clamp

Cable, Wire, and Hose Routing

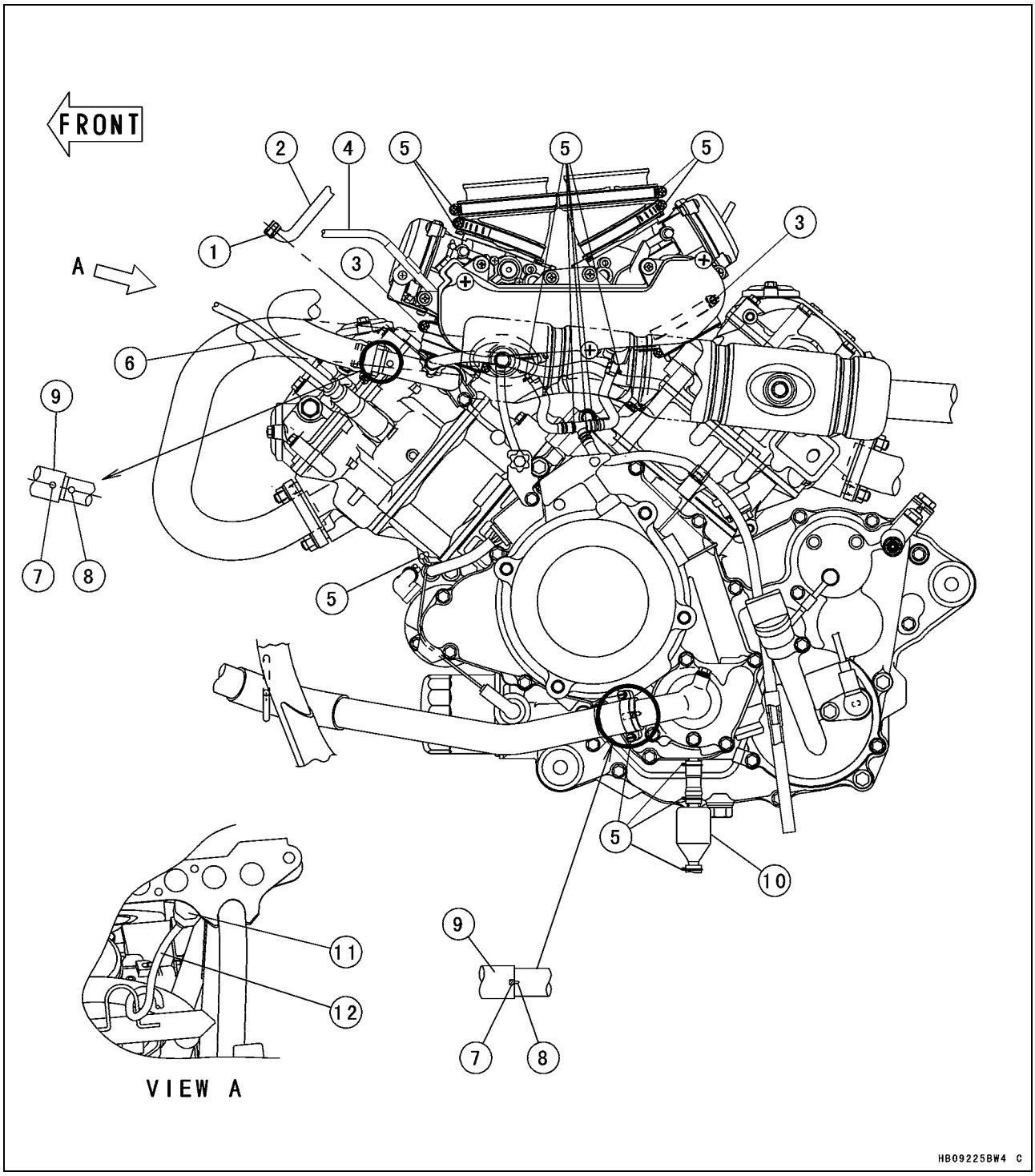

1. Clamp
2. Vacuum Hose
3. Clamps
4. Choke Cable
5. Clamps
6. Water Hose
7. White Paint
8. Mark
9. Water Pipe
10. Coolant Catch Tank
11. Ignition Coil
12. Ignition Coil Lead

Cable, Wire, and Hose Routing

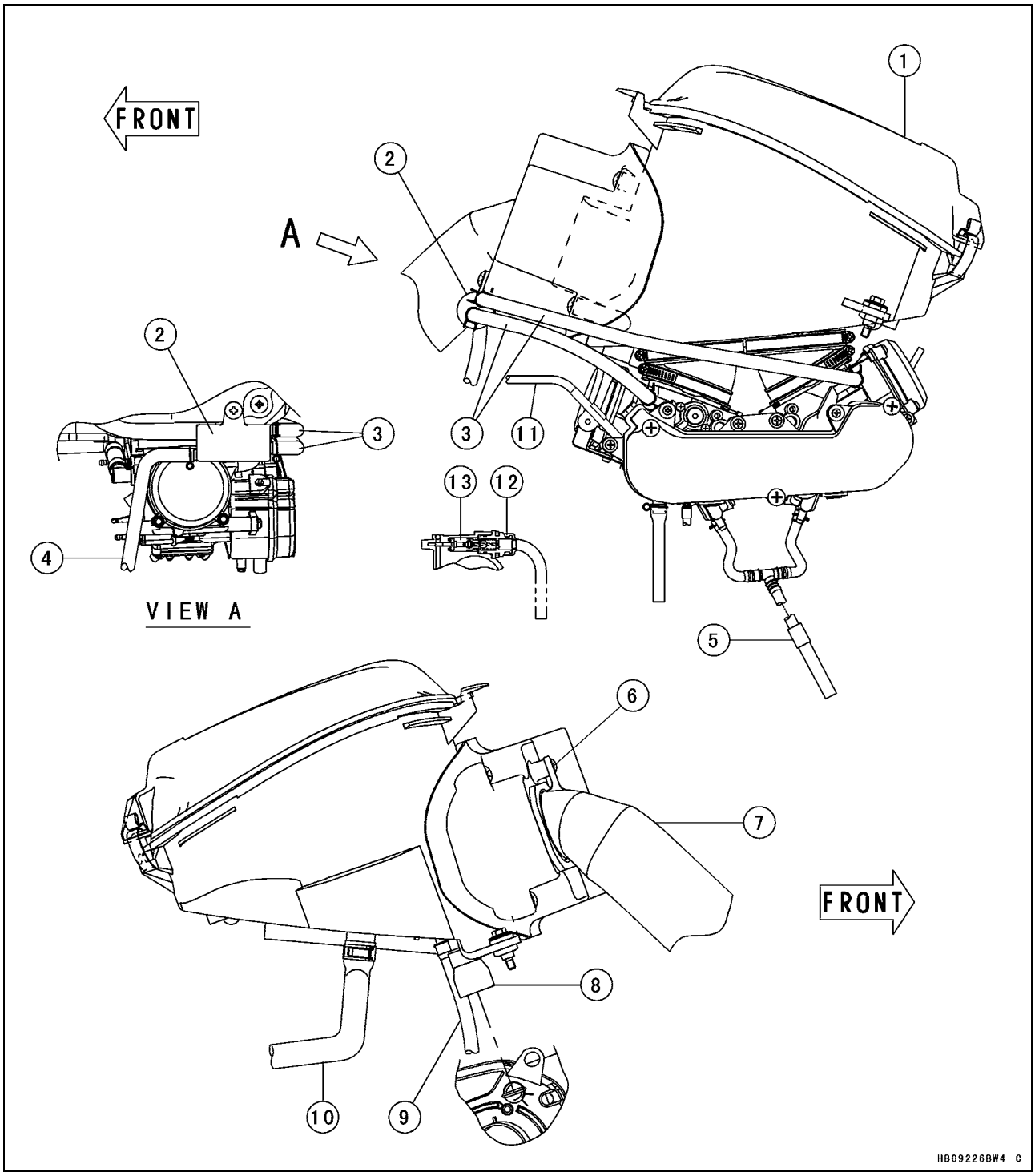

1. Air Cleaner Cover
2. Breather Tank
3. Carburetor Breather Tubes
4. Breather Tube
5. Check Valve
6. Duct Screw
7. Air Intake Duct
8. Drain Tube
9. Drain Tube
10. Engine Breather Hose
11. Choke Cable
12. Boot
13. Choke Plunger

Cable, Wire, and Hose Routing

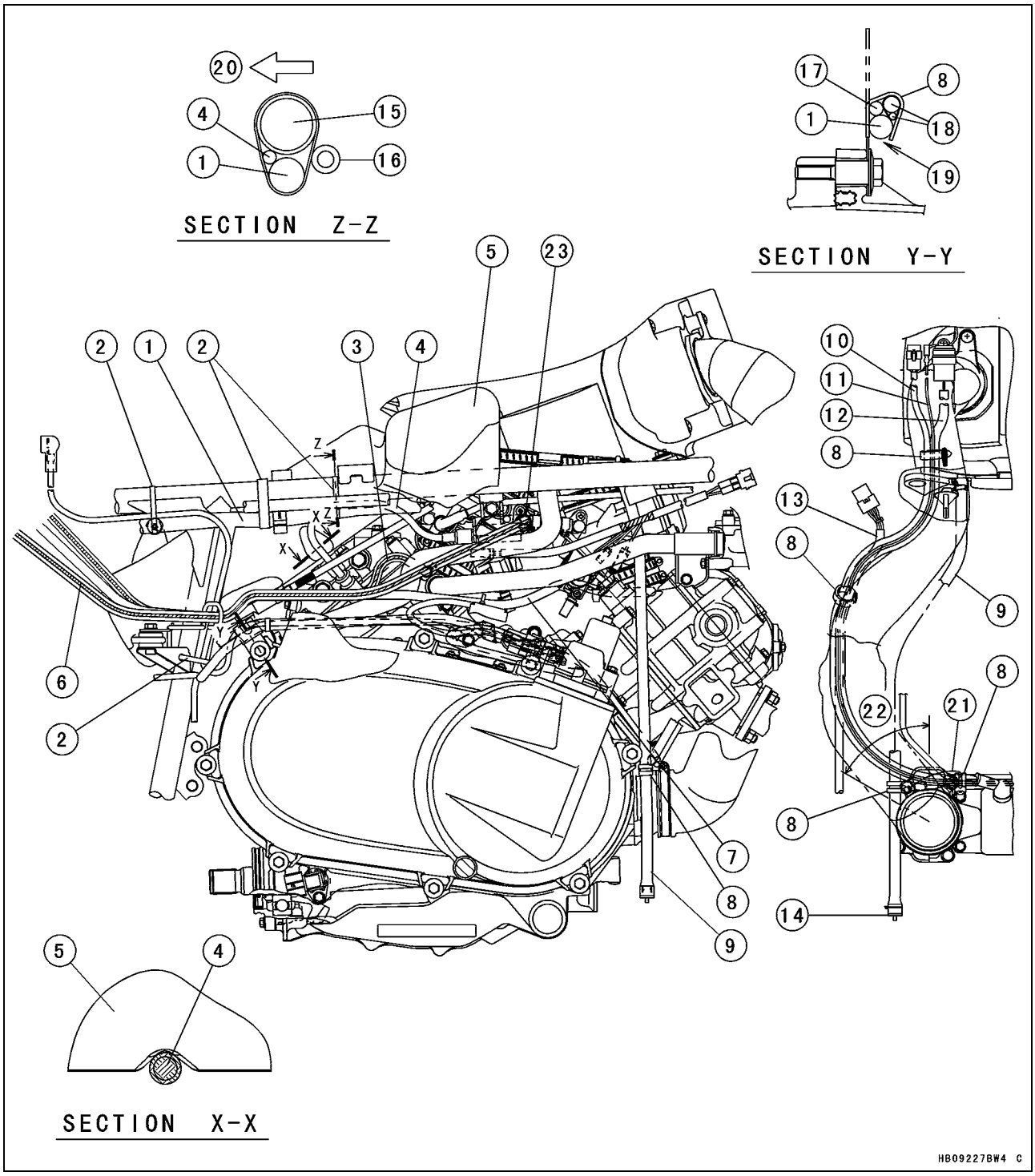

1. Main Harness
2. Bands
3. Vacuum Hose (Blue Line)
4. Spark Plug Lead (It shall be installed along with the concave of exhaust dust.)
5. Torque Converter Air Duct
6. Fuel Hose (Red Line)
7. Vacuum Hose
8. Clamps
9. Drain Hose
10. Crankshaft Sensor Lead
11. Oil Pressure Switch Lead
12. Alternator Lead
13. 2WD/4WD Actuator Lead
14. Plug
15. Frame Pipe
16. Rear Final Gear Case Breather Hose
17. Starter Motor Cable
18. Engine Ground Leads
19. No Interference
20. Engine Side
21. Install the clamp so it does not interfere with the harness. Position the clamp within an angle of 60°.
22. 60°
23. Clamp (Install it as shown)

Cable, Wire, and Hose Routing

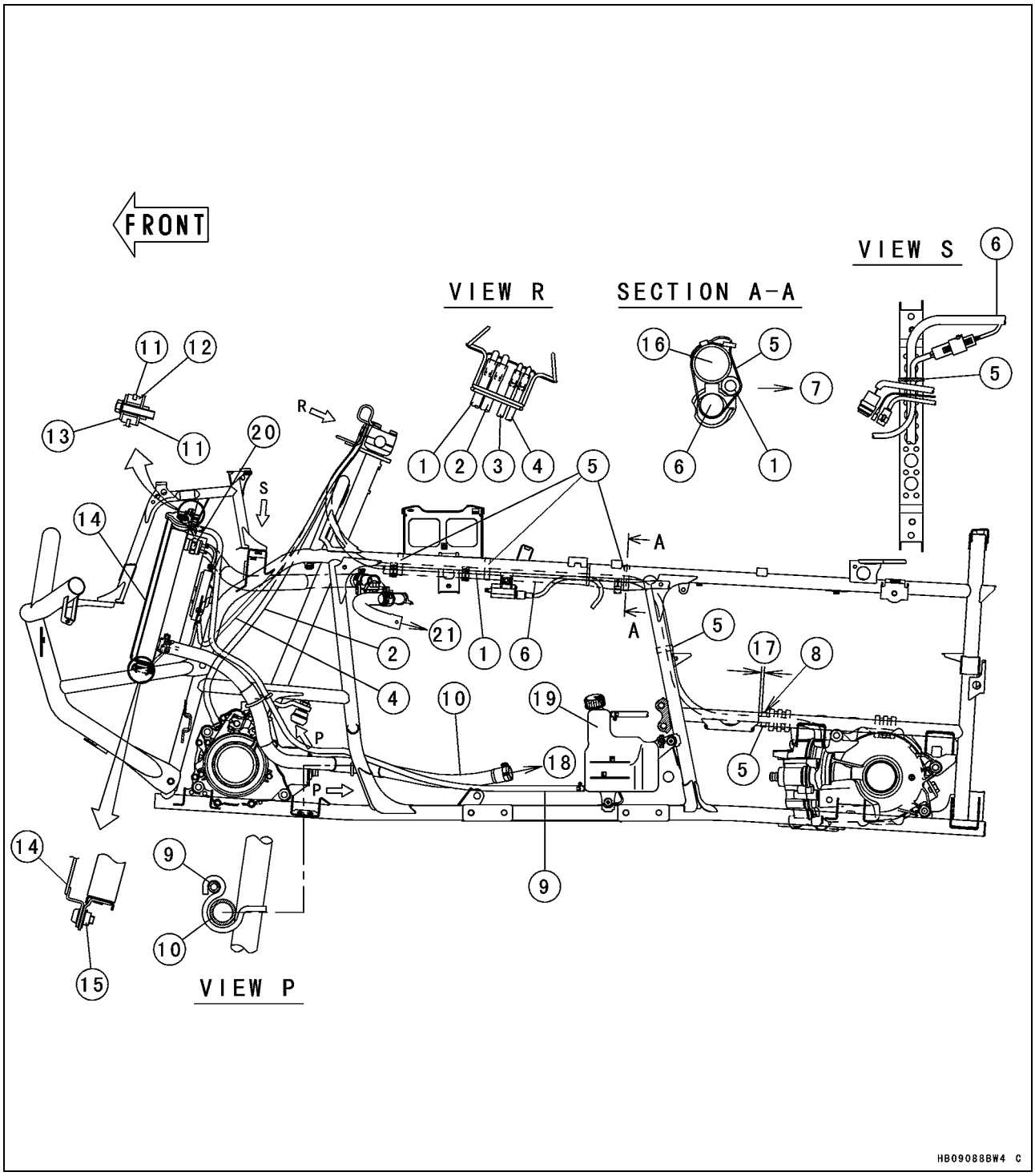

1. Rear Final Gear Case Breather Tube
2. Front Final Gear Case Breather Tube
3. Carburetor Breather Tube
4. Radiator Fan Motor Breather Tube
5. Bands
6. Main Harness
7. Outside
8. Fix breather tube to right frame pipe.
9. Water Hose
10. Water Hose
11. Radiator Mounting Bracket
12. Damper
13. Collar
14. Radiator Screen
15. Nut
16. Frame Pipe
17. about 5 mm (0.20 in.)
18. To Water Pump
19. Reserve Tank
20. Radiator Fan Switch
21. To Front Cylinder Head

Cable, Wire, and Hose Routing

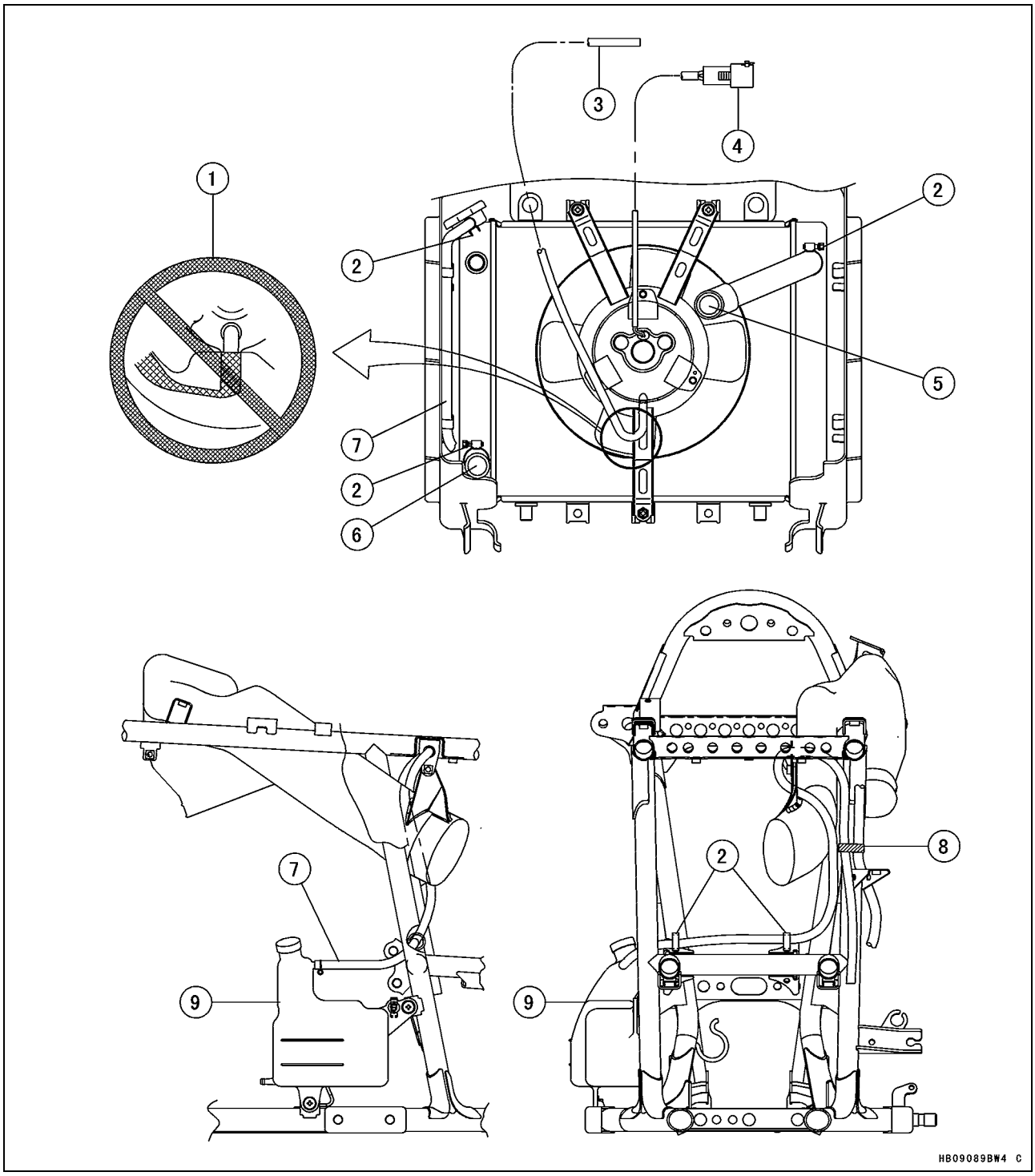

1. Not crush fan motor breather tube to pull it.
2. Clamps
3. Radiator Fan Motor Breather Tube
4. Radiator Fan Motor Lead Connector
5. To Thermostat
6. To Water Pump
7. Water Hose
8. Band
9. Reserve Tank

Cable, Wire, and Hose Routing

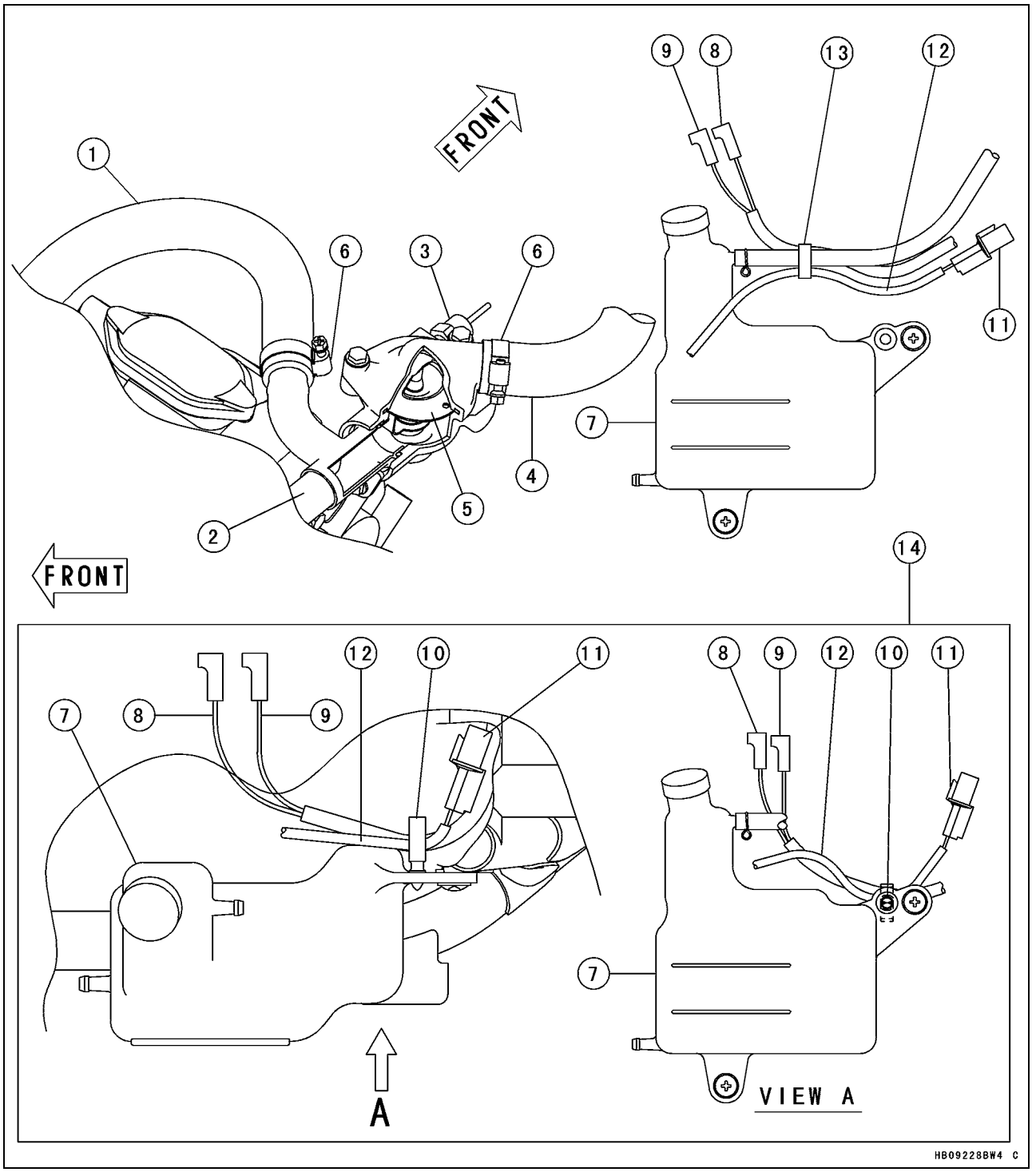

1. Water Hose
2. Water Pipe
3. Water Temperature Switch (Do not bend its lead)
4. Water Hose
5. Thermostat
6. Clamp
7. Reserve Tank
8. Reverse Switch Lead
9. Neutral Switch Lead
10. Clamp
11. Forward/Reverse Detecting Sensor Lead Connector
12. Run the forward/reverse detecting sensor lead outside of neutral and reverse switch leads.
13. Band
14. KVF750-A1, B1, A6F, B6F, C6F

Cable, Wire, and Hose Routing

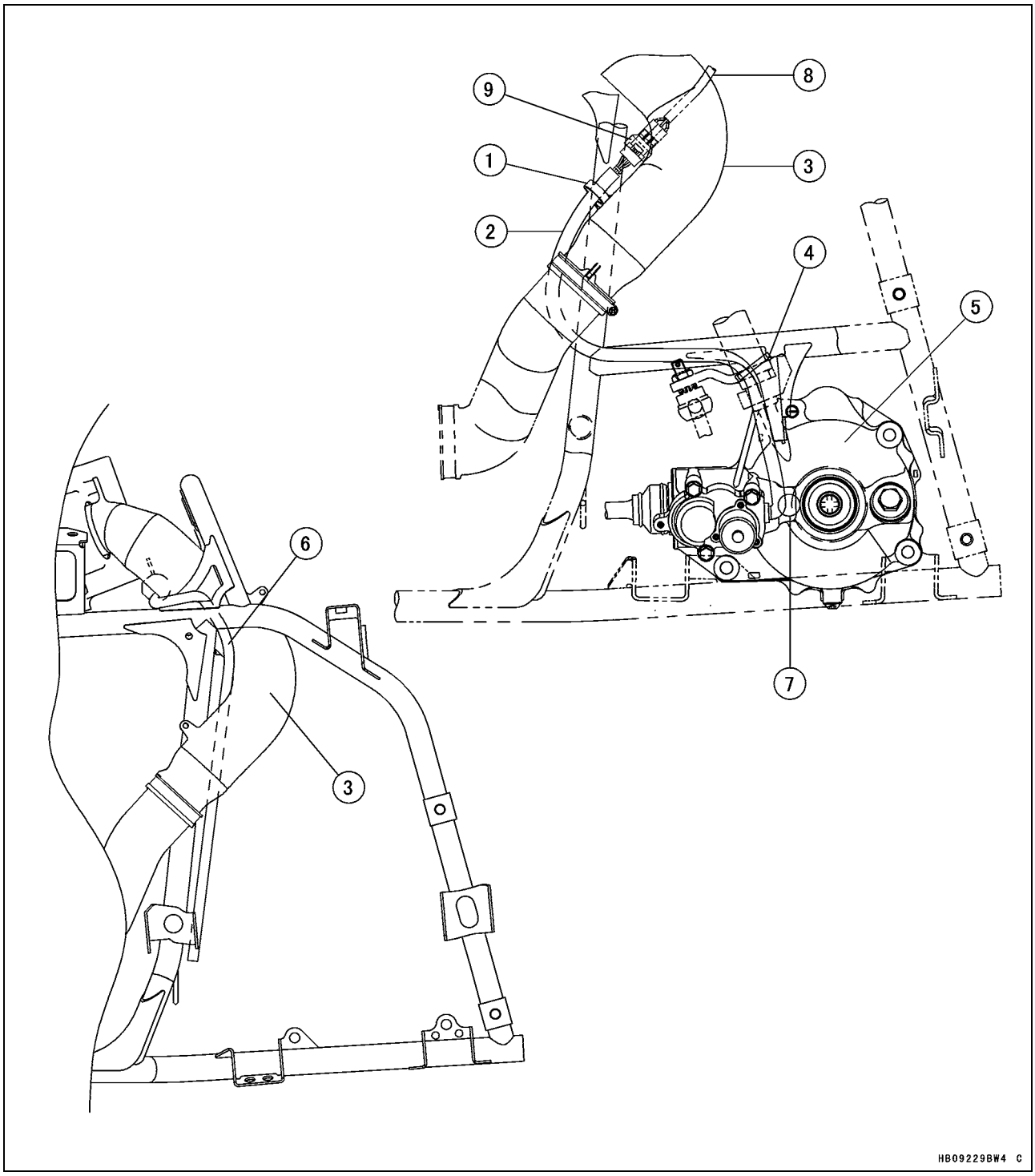

1. Clamp
2. 2WD/4WD Actuator Lead
3. Air Intake Duct
4. Band
5. Front Final Gear Case
6. Carburetor Air Vent Tube
7. No Interference
8. Main Harness
9. 2WD/4WD Actuator Lead Connector (Apply grease all around on the top surface of connector to be waterproof.)

Cable, Wire, and Hose Routing

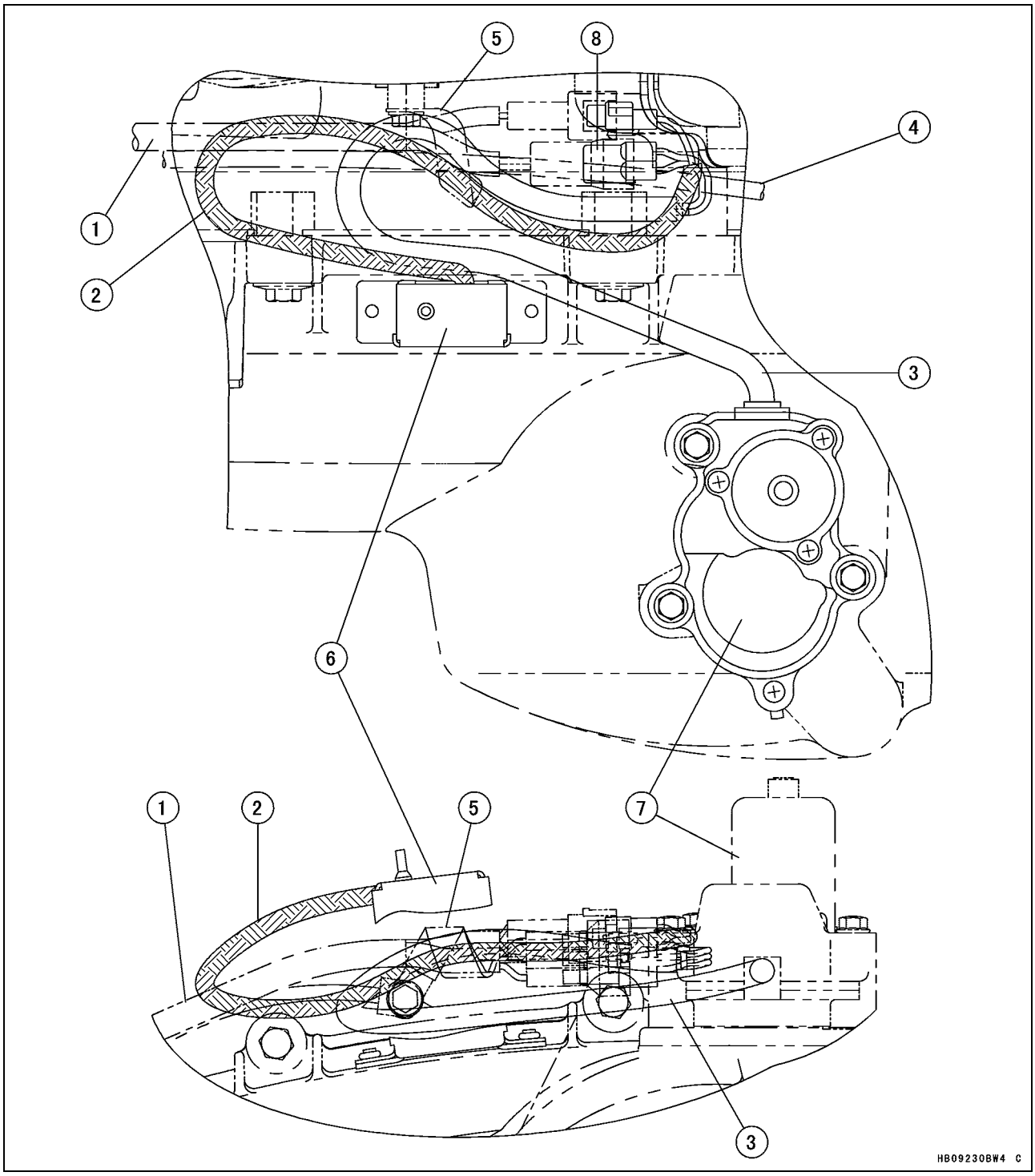

1. Main Harness
2. Drive Belt Failure Detecting Switch Lead
3. Engine Brake Actuator Lead
4. Starter Motor Cable
5. Clamp
6. Drive Belt Failure Detecting Switch
7. Engine Brake Actuator
8. Engine Brake Actuator Lead Connector (Apply grease all around on the top surface of connector to be waterproof.)

Cable, Wire, and Hose Routing

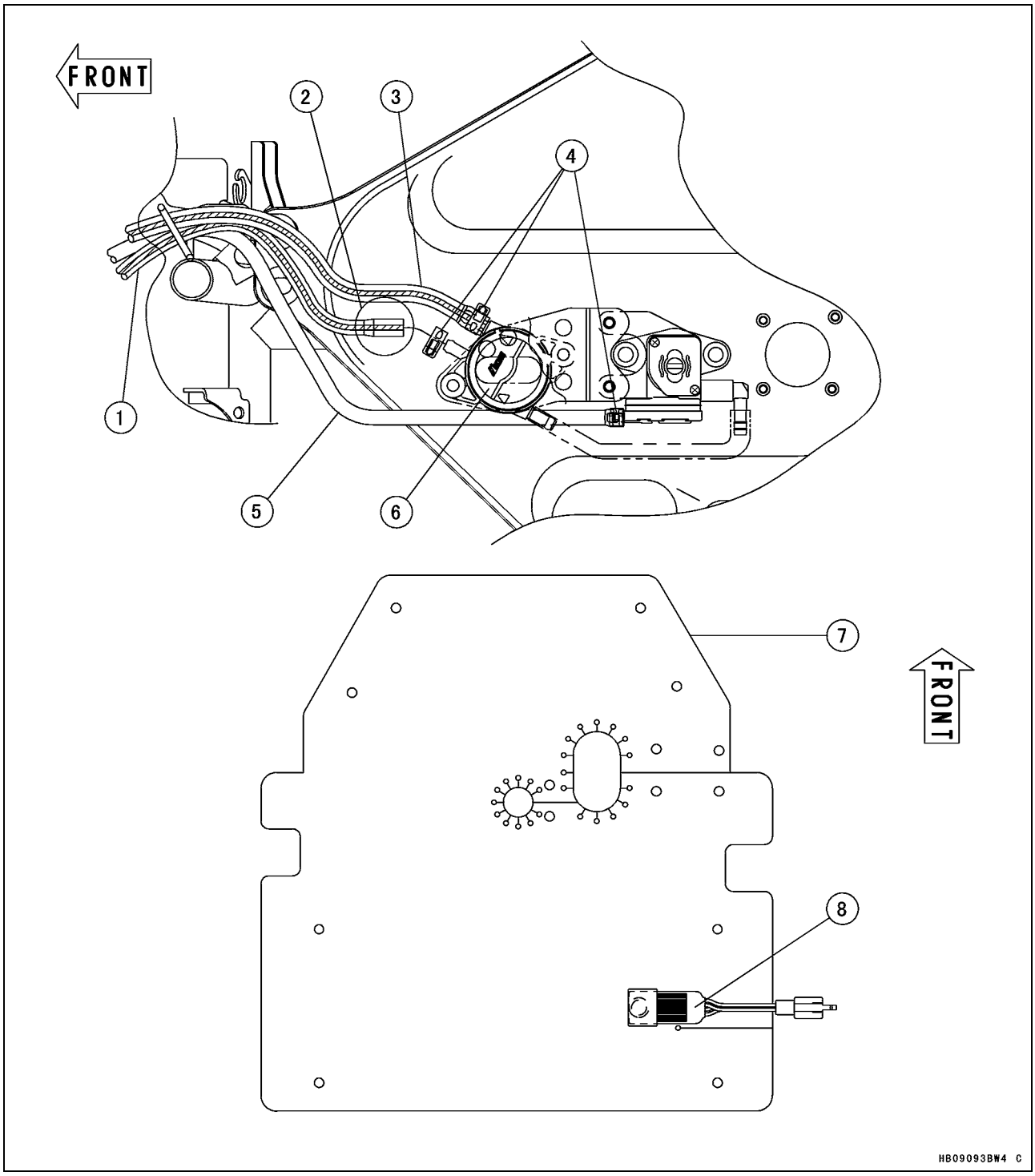

1. Vacuum Hose (to rear cylinder head with blue line)
2. Connect the thick side of hose to the fuel pump.
3. Fuel Hose (to carburetor with red line)
4. Clamps
5. Vacuum Hose (to front cylinder head)
6. Fuel Pump
7. Rubber Cover
8. Air Temperature Sensor

Cable, Wire, and Hose Routing

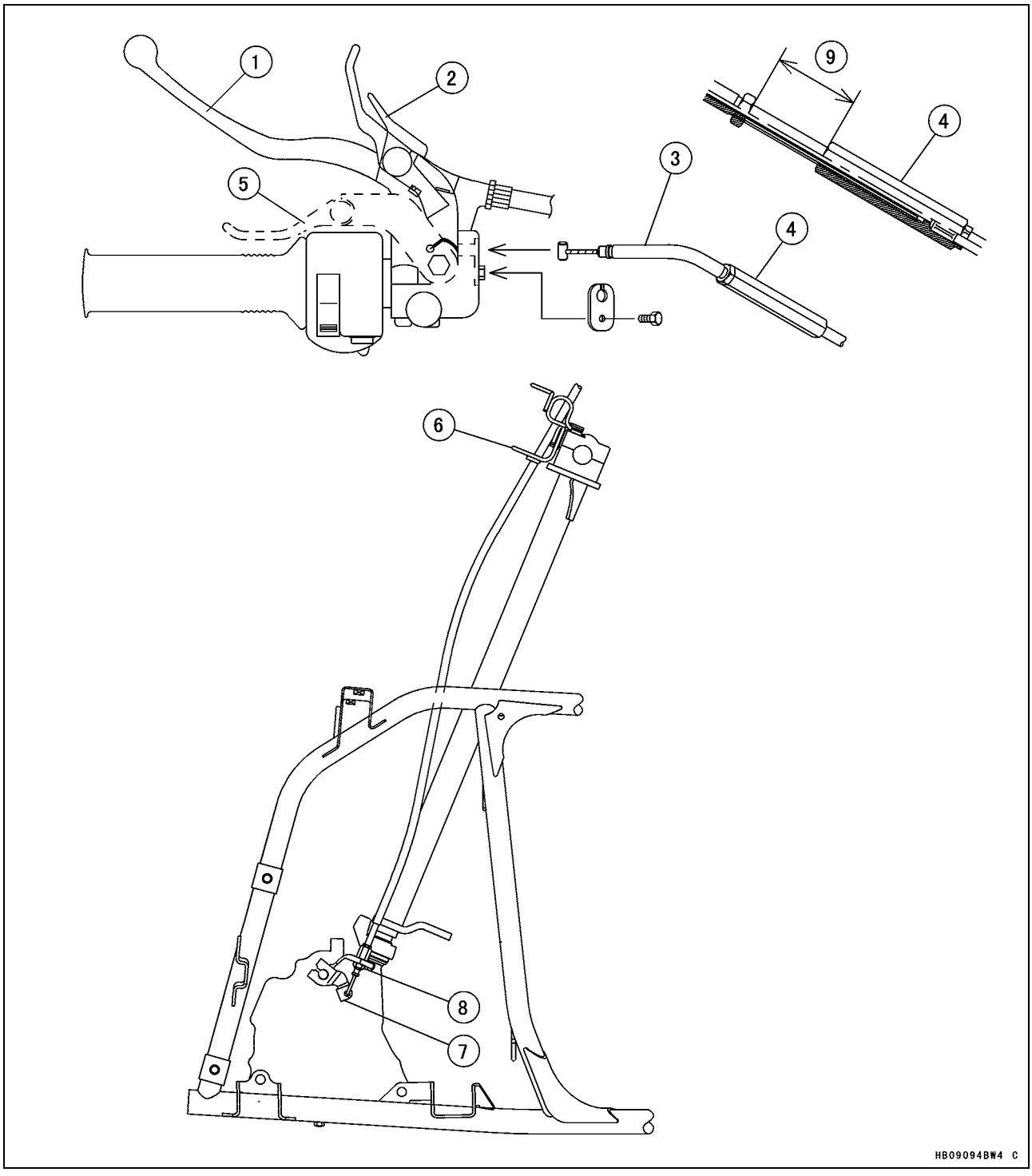

1. Rear Brake Lever
2. Parking Brake Lock Lever
3. Variable Differential Control Cable
4. Cable Adjuster
5. Variable Differential Control Lever
6. Handle Holder Clamp
7. Variable Differential Operating Lever
8. Fit the dust cap.
9. 27 ~ 35 mm (1.1 ~ 1.4 in.)

Cable, Wire, and Hose Routing

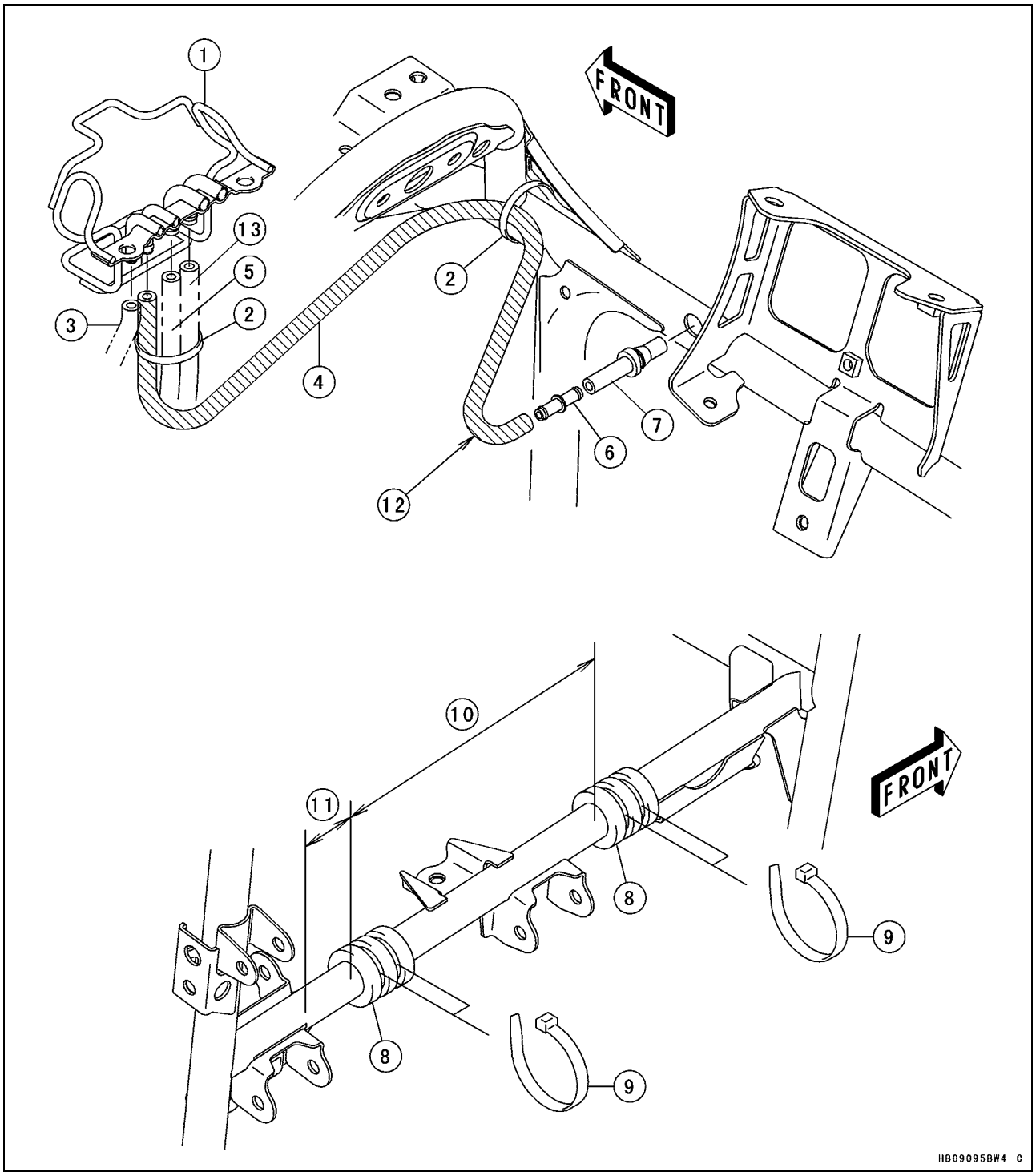

1. Clamp
2. Bands
3. Radiator Fan Motor Breather Tube
4. Carburetor Breather Tube
5. Front Final Gear Case Breather Tube
6. Joint
7. Tube
8. Dampers
9. Bands
10. 220 mm (8.66 in.)
11. 60 mm (2.36 in.)
12. “L” Formed Side
13. Rear Final Gear Case Breather Tube

Cable, Wire, and Hose Routing

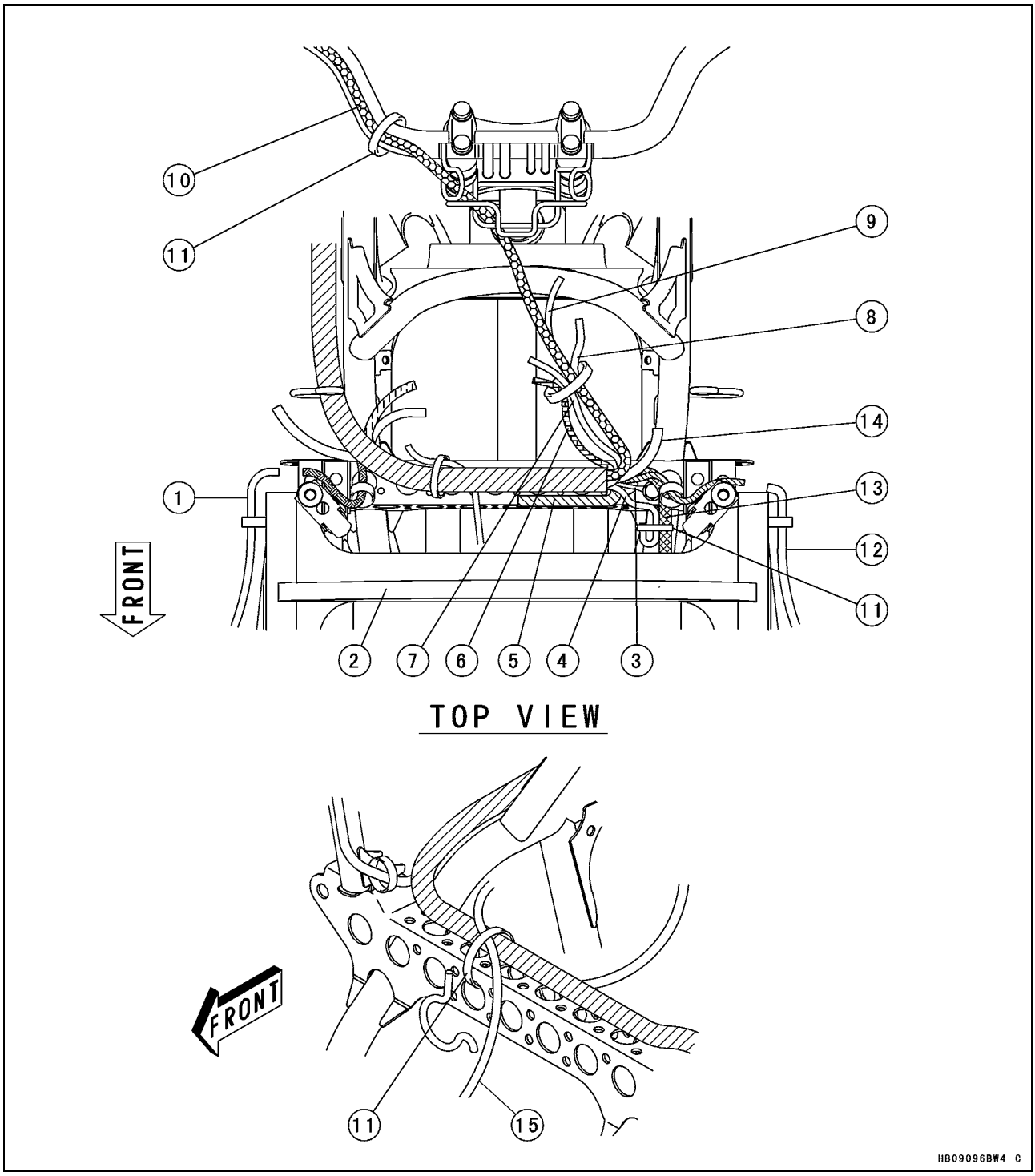

1. Right Headlight Lead
2. Radiator Cover
3. Frame Ground Lead
4. Horn Switch Lead (Australia and Europe Models)
5. Alternator, Crankshaft Sensor and Oil Pressure Switch Leads
6. Rear Brake Light Switch Lead
7. 2WD/4WD Shift Switch Lead
8. Left Handlebar Switch Lead
9. Meter Lead
10. Front Brake Light Switch Lead
11. Bands
12. Left Headlight Lead
13. Radiator Fan Switch Lead
14. Ignition Coil Primary Lead
15. Radiator Fan Motor Lead

Cable, Wire, and Hose Routing

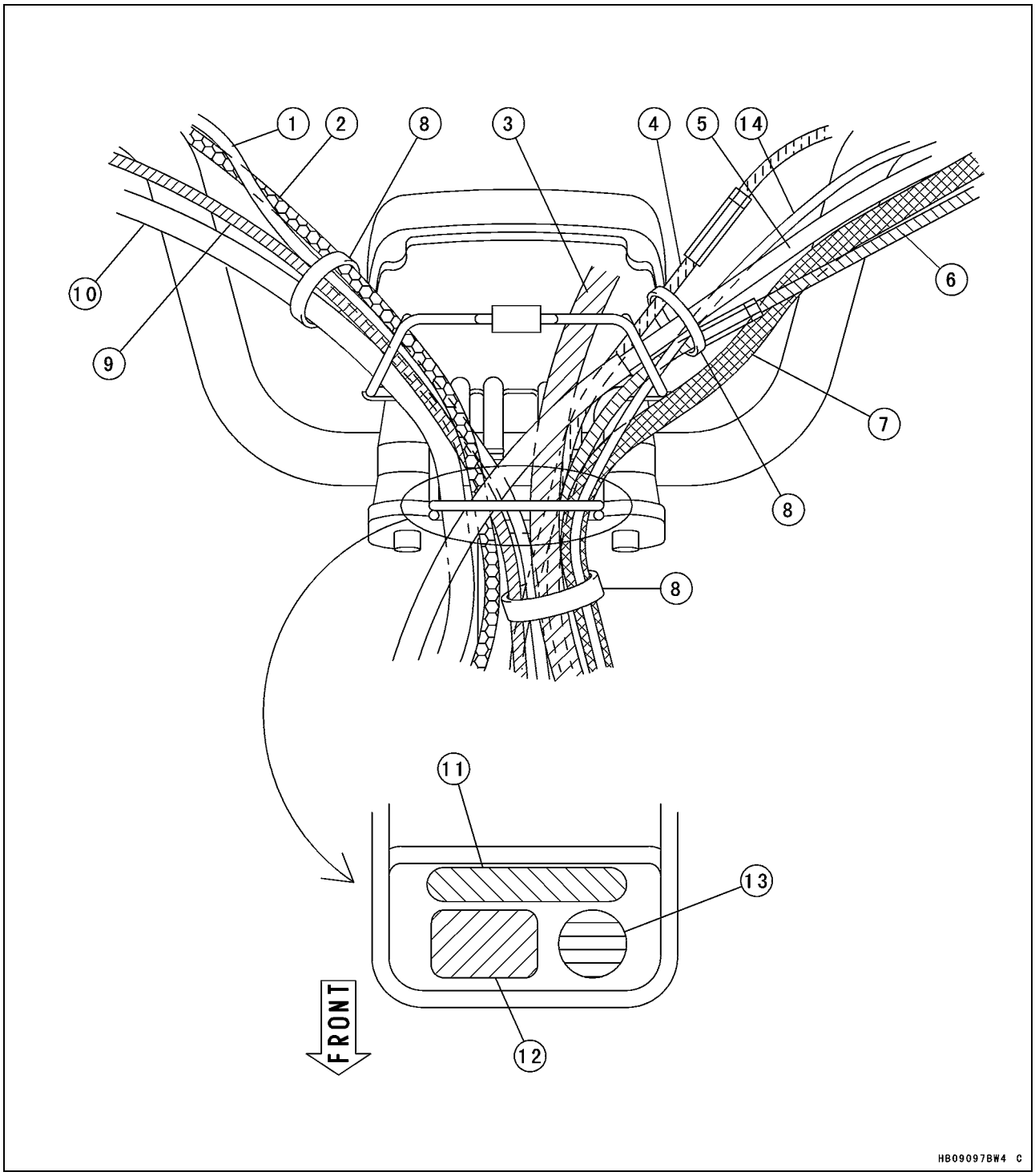

1. Right Handlebar Switch Lead
2. Throttle Cable
3. Meter Lead
4. Variable Differential Control Cable
5. Parking Brake Cable
6. Choke Cable
7. Left Handlebar Switch Lead
8. Bands
9. Front Brake Light Switch Lead
10. Brake Hose
11. Tubes
12. Cables and Brake Hose
13. Leads
14. Rear Brake Light Switch Lead

Cable, Wire, and Hose Routing

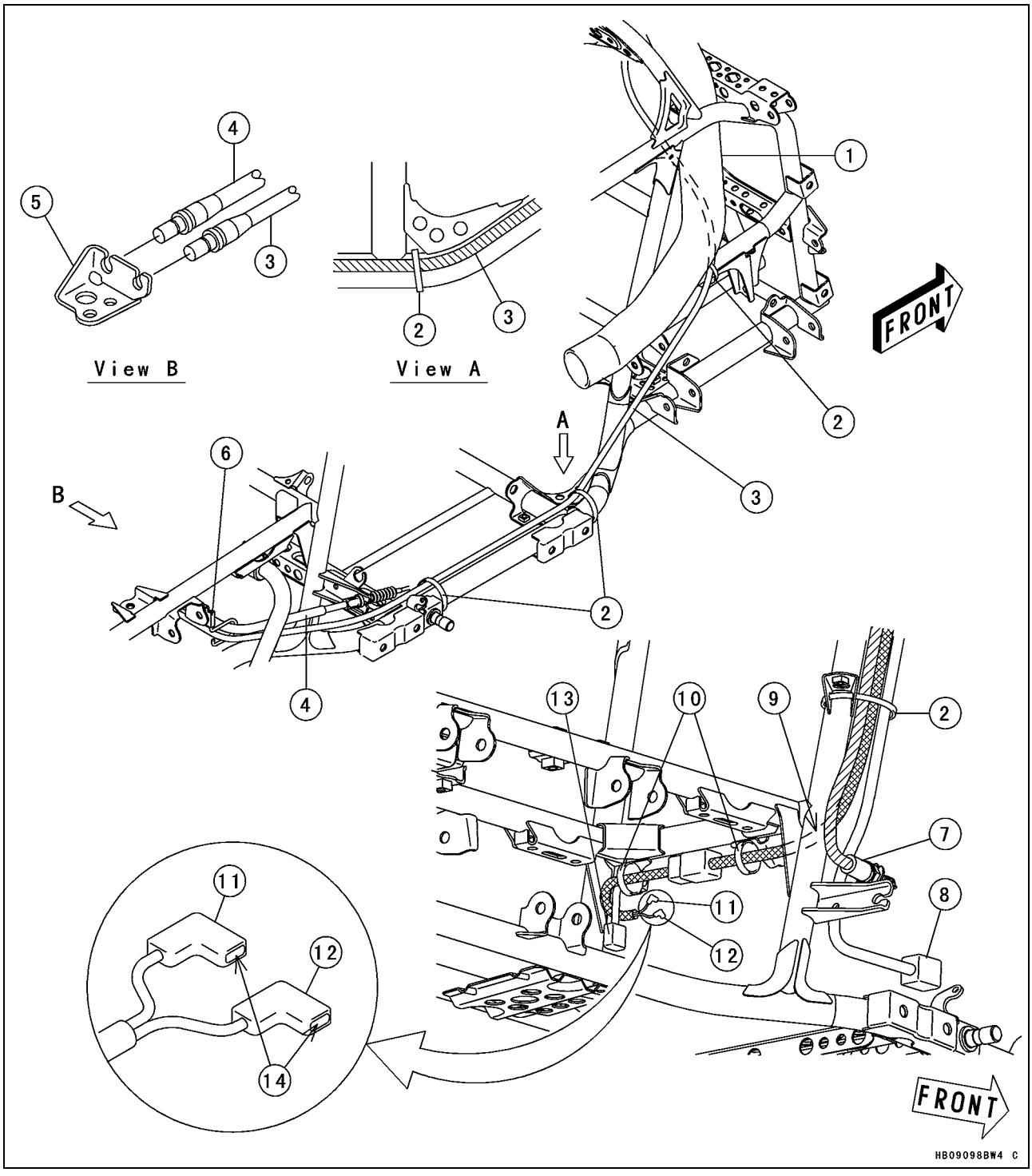

1. Air Intake Duct
2. Bands
3. Parking Brake Cable
4. Rear Brake Cable
5. Bracket
6. Clamp
7. Rear Brake Light Switch
8. Speed Sensor Lead Connector
9. Run the lead front side of frame pipe.
10. Clamps
11. Reverse Switch Lead Connector
12. Neutral Switch Lead Connector
13. Forward/Reverse Detecting Sensor Lead Connector
14. Apply grease (Amoco Rykon Premium Grease No.2 EP Green)

Cable, Wire, and Hose Routing

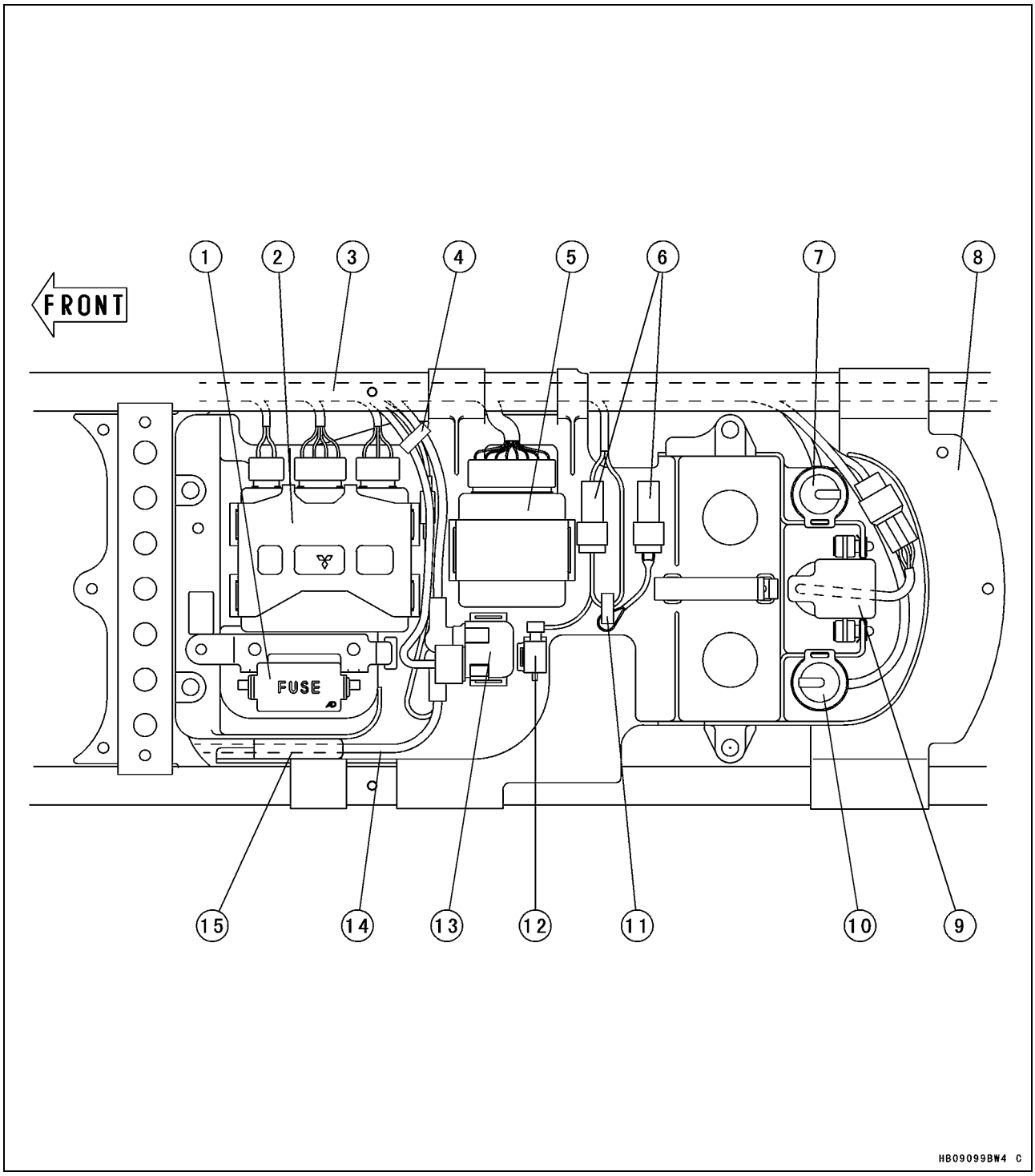

1. Fuse Box
2. Igniter
3. Main Harness
4. Clamp
5. Actuator Controller
6. Reset Connectors
7. Starter Circuit Relay (Neutral)
8. Electric Parts Case
9. Vehicle Down Sensor
10. Starter Circuit Relay (Brake)
11. Clamp
12. Radiator Fan Breaker
13. Starter Relay
14. Battery (+) Cable
15. Run the cable under the case.

Cable, Wire, and Hose Routing

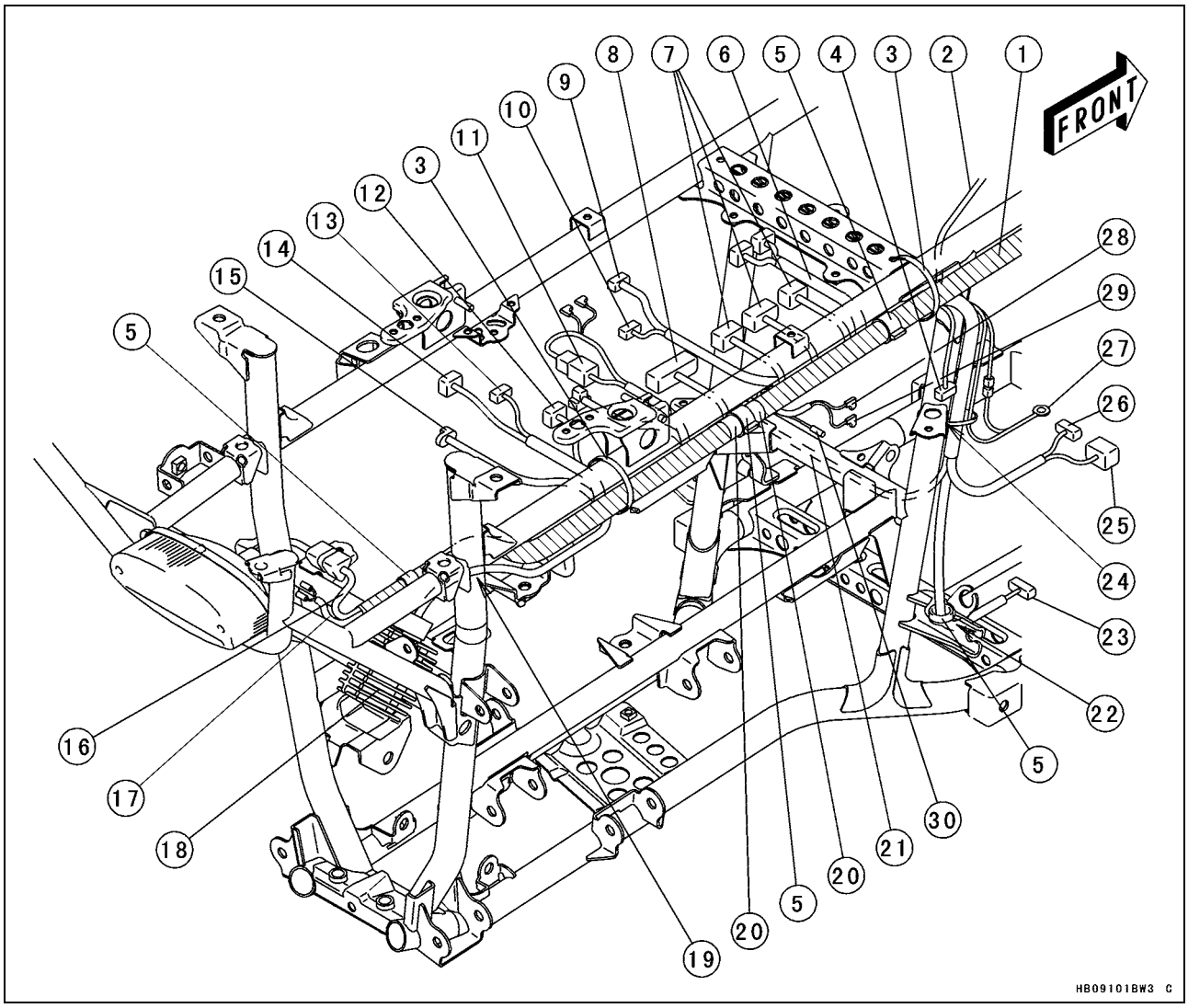

1. Main Harness
2. Battery (−) Cable
3. Bands
4. To Rear Brake Light Switch
5. Clamps
6. Fuse Box Lead
7. To Igniter
8. To Actuator Controller
9. To Starter Relay
10. Battery (+) Cable
11. Reset Connector
12. To Starter Circuit Relay (Neutral)
13. To Vehicle Down Sensor
14. To Starter Circuit Relay (Brake)
15. Accessory Connector
16. To Tail/Brake Light
17. To Reverse Light (Europe Model)
18. Regulator/Rectifier
19. Run the lead inside of frame pipe.
20. White Tape
21. Run the lead under side of frame pipe.
22. Insert the clamp into hole of frame.
23. To Speed Sensor
24. Insert the band into hole of frame.
25. To Engine Brake Actuator
26. To Drive Belt Failure Detecting Switch
27. Engine Ground Lead Terminal
28. Reverse Switch Lead Connector
29. Neutral Switch Lead Connector
30. Forward/Reverse Detecting Sensor Lead Connector

Cable, Wire, and Hose Routing

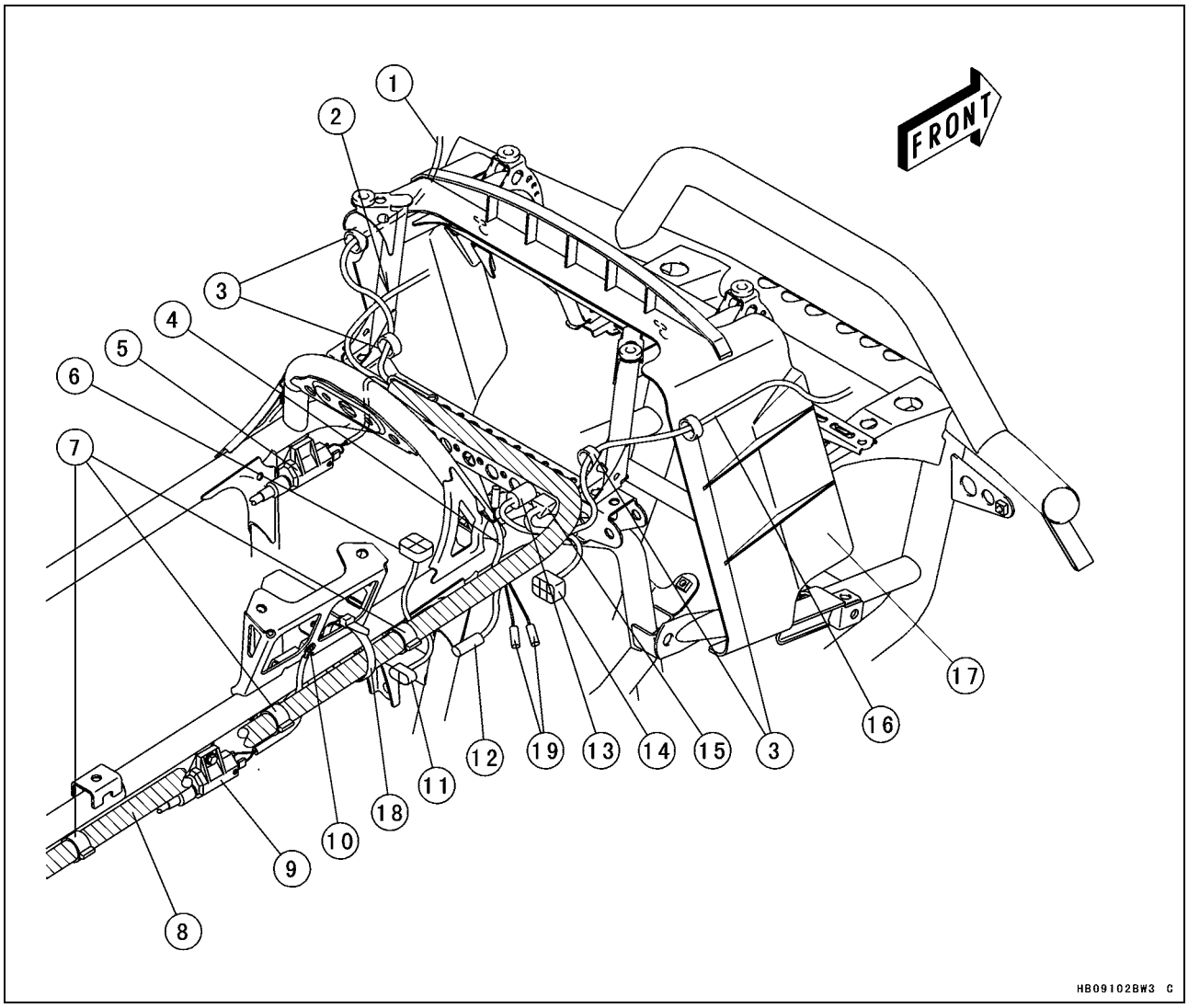

1. To Left Headlight
2. Run the radiator fan switch inside of frame pipe.
3. Clamps
4. To Power Outlet Connector
5. Front Ignition Coil
6. To Air Temperature Sensor
7. Clamps
8. Main Harness
9. Rear Ignition Coil
10. Frame Ground Terminal
11. To Carburetor Heater
12. To Water Temperature Switch
13. To Radiator Fan Motor
14. To 2WD/4WD Actuator
15. To Ignition Switch
16. To Right Headlight
17. Radiator Cover
18. Band
19. Accessory Connector

Cable, Wire, and Hose Routing

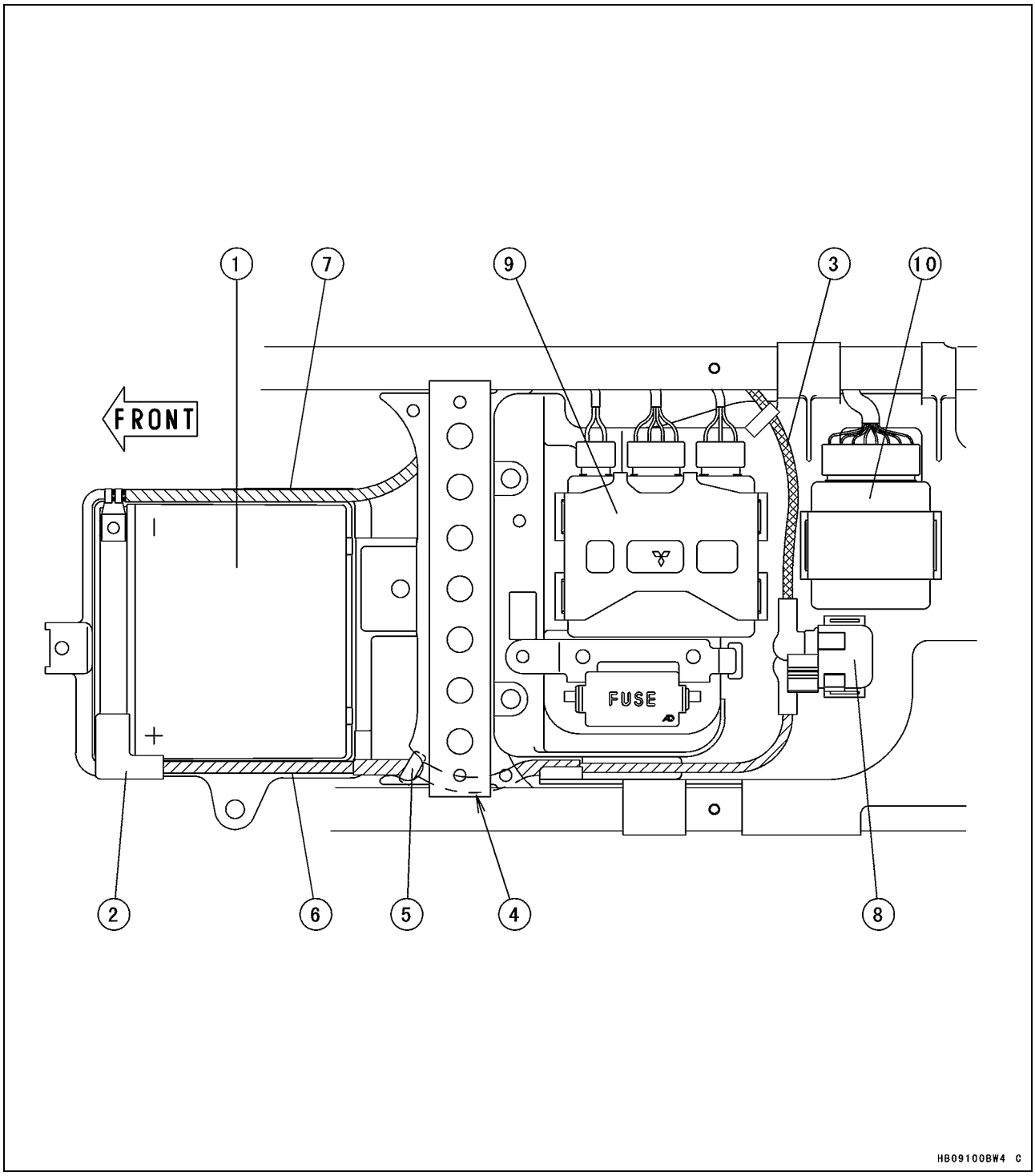

1. Battery
2. Red Cap
3. From Starter Motor
4. Run the battery cable under the frame pipe.
5. Insert the clamp info the hole of bottom side.
6. Battery (+) Cable
7. Battery (–) Cable
8. Starter Relay
9. Igniter
10. Actuator Controller

Cable, Wire, and Hose Routing

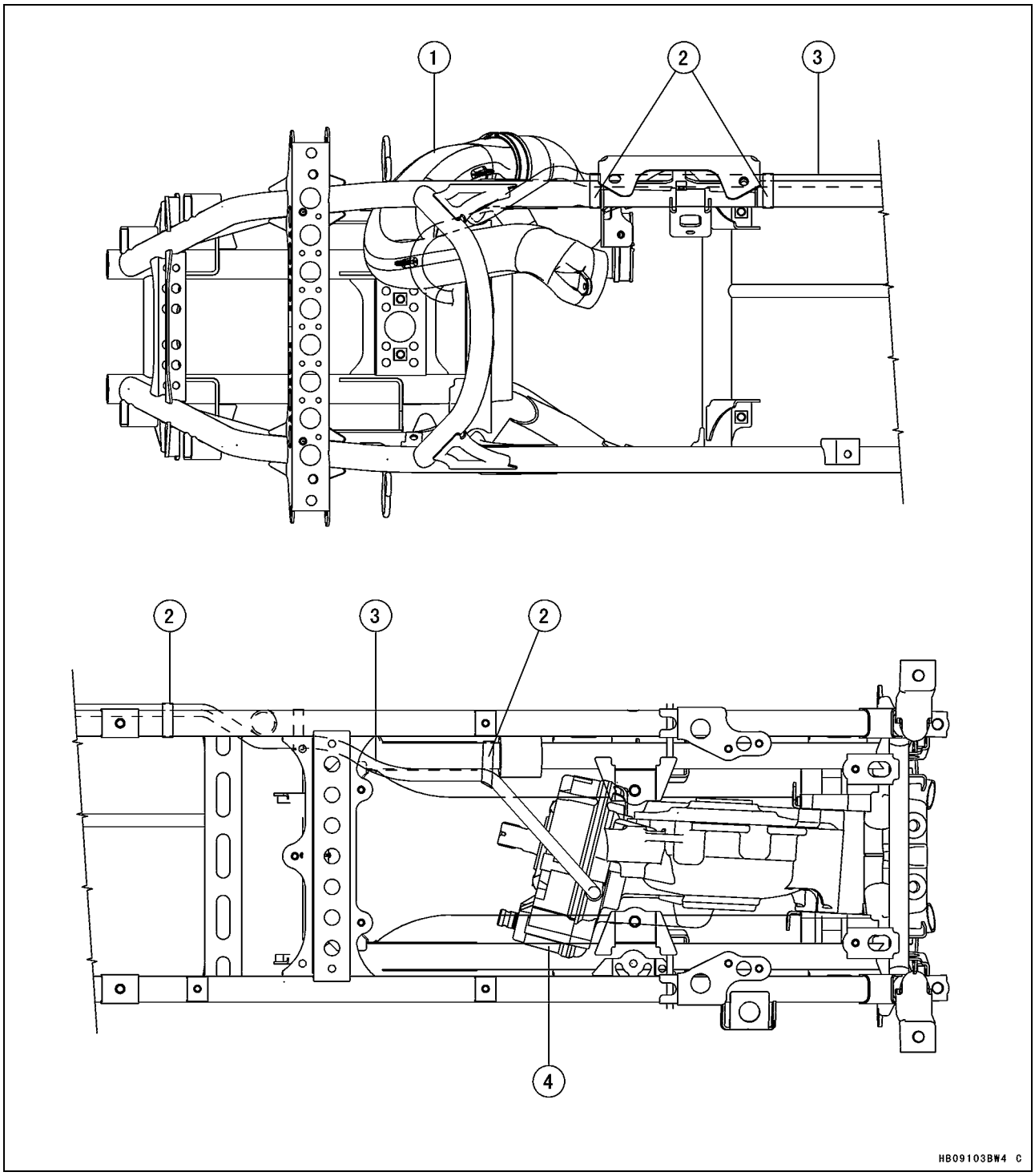

1. Converter Intake Duct
2. Bands
3. Rear Final Gear Case Breather Tube
4. Rear Final Gear Case

MODEL APPLICATION

Year	Model	Beginning Frame No.
2005	KVF750-A1	JKAVFDA1□5B500001 or JKAVF750AAB600001
2005	KVF750-B1	JKAVFDB1□5B500001
2006	KVF750A6F	JKAVF750AAB601201 JKAVFDA1□6B519001
2006	KVF750B6F	JKAVFDB1□6B519001
2006	KVF750C6F	JKAVFDC1□6B500001
2007	KVF750A7F	JKAVF750AAB602401 JKAVFDA1□7B527701
2007	KVF750B7F	JKAVFDB1□7B512101
2007	KVF750C7F	JKAVFDC1□7B504615

□:This digit in the frame number changes from one machine to another.

Kawasaki
KAWASAKI HEAVY INDUSTRIES, LTD.
Consumer Products & Machinery Company

Part No.99924-1334-04

Printed in Japan