Kawasaki

KX450F

Motorcycle Service Manual

Quick Reference Guide

General Information	1
Periodic Maintenance	2
Fuel System (DFI)	3
Cooling System	4
Engine Top End	5
Clutch	6
Engine Lubrication System	7
Engine Removal/Installation	8
Crankshaft/Transmission	9
Wheels/Tires	10
Final Drive	11
Brakes	12
Suspension	13
Steering	14
Frame	15
Electrical System	16
Appendix	17

This quick reference guide will assist you in locating a desired topic or procedure.

- Bend the pages back to match the black tab of the desired chapter number with the black tab on the edge at each table of contents page.
- Refer to the sectional table of contents for the exact pages to locate the specific topic required.

Kawasaki

KX450F

Motorcycle Service Manual

All rights reserved. No parts of this publication may be reproduced, stored in a retrieval system, or transmitted in any form or by any means, electronic mechanical photocopying, recording or otherwise, without the prior written permission of Quality Assurance Division/Motorcycle & Engine Company/Kawasaki Heavy Industries, Ltd., Japan.

No liability can be accepted for any inaccuracies or omissions in this publication, although every possible care has been taken to make it as complete and accurate as possible.

The right is reserved to make changes at any time without prior notice and without incurring an obligation to make such changes to products manufactured previously. See your Motorcycle dealer for the latest information on product improvements incorporated after this publication.

All information contained in this publication is based on the latest product information available at the time of publication. Illustrations and photographs in this publication are intended for reference use only and may not depict actual model component parts.

© 2011 Kawasaki Heavy Industries, Ltd.

3rd Edition (1) : Mar. 15, 2013

LIST OF ABBREVIATIONS

A	ampere(s)	in.	inch(s)
ABDC	after bottom dead center	KDS	Kawasaki Diagnostic System
AC	alternating current	km/h	kilometers per hour
Ah	ampere hour	L	liter(s)
ATDC	after top dead center	lb	pound(s)
BBDC	before bottom dead center	LED	Light Emitting Diode
BDC	bottom dead center	m	meter(s)
BTDC	before top dead center	min	minute(s)
°C	degree(s) Celsius	mph	miles per hour
cmHg	centimeters of mercury	N	newton(s)
CPU	Central Processing Unit	oz	ounce(s)
cu in	cubic inch(s)	Pa	pascal(s)
DC	direct current	PS	horsepower
DFI	Digital Fuel Injection	psi	pound(s) per square inch
ECU	Electronic Control Unit	qt	quart(s)
F	farad(s)	r	revolution
°F	degree(s) Fahrenheit	rpm	revolution(s) perminute
ft	foot, feet	s	second(s)
g	gram(s)	TDC	top dead center
gal	gallon(s)	V	volt(s)
h	hour(s)	W	watt(s)
HP	horsepower(s)	Ω	ohm(s)

COUNTRY AND AREA CODES

AU	Australia	EUR	Europe
BR	Brazil	TH	Thailand
CA	Canada	US	United States

Foreword

This manual is designed primarily for use by trained mechanics in a properly equipped shop. However, it contains enough detail and basic information to make it useful to the owner who desires to perform his own basic maintenance and repair work. A basic knowledge of mechanics, the proper use of tools, and workshop procedures must be understood in order to carry out maintenance and repair satisfactorily. Whenever the owner has insufficient experience or doubts his ability to do the work, all adjustments, maintenance, and repair should be carried out only by qualified mechanics.

In order to perform the work efficiently and to avoid costly mistakes, read the text, thoroughly familiarize yourself with the procedures before starting work, and then do the work carefully in a clean area. Whenever special tools or equipment are specified, do not use makeshift tools or equipment. Precision measurements can only be made if the proper instruments are used, and the use of substitute tools may adversely affect safe operation.

To get the longest life out of your vehicle:

- Follow the Periodic Maintenance Chart in the Service Manual.
- Be alert for problems and non-scheduled maintenance.
- Use proper tools and genuine Kawasaki Motorcycle parts. Special tools, gauges, and testers that are necessary when servicing Kawasaki motorcycles are introduced by the Service Manual. Genuine parts provided as spare parts are listed in the Parts Catalog.
- Follow the procedures in this manual carefully. Don't take shortcuts.
- Remember to keep complete records of maintenance and repair with dates and any new parts installed.

How to Use This Manual

In this manual, the product is divided into its major systems and these systems make up the manual's chapters. The Quick Reference Guide shows you all of the product's system and assists in locating their chapters. Each chapter in turn has its own comprehensive Table of Contents.

For example, if you want stick coil information, use the Quick Reference Guide to locate the Electrical System chapter. Then, use the Table of Contents on the first page of the chapter to find the Stick Coil section.

Whenever you see symbols, heed their instructions! Always follow safe operating and maintenance practices.

⚠ DANGER

DANGER indicates a hazardous situation which, if not avoided, will result in death or serious injury.

⚠ WARNING

WARNING indicates a hazardous situation which, if not avoided, could result in death or serious injury.

NOTICE

NOTICE is used to address practices not related to personal injury.

This manual contains four more symbols which will help you distinguish different types of information.

NOTE

○*NOTE indicates information that may help or guide you in the operation or service of the vehicle.*

- Indicates a procedural step or work to be done.

○Indicates a procedural sub-step or how to do the work of the procedural step it follows. It also precedes the text of a NOTE.

★Indicates a conditional step or what action to take based on the results of the test or inspection in the procedural step or sub-step it follows.

In most chapters an exploded view illustration of the system components follows the Table of Contents. In these illustrations you will find the instructions indicating which parts require specified tightening torque, oil, grease or a locking agent during assembly.

General Information

Table of Contents

Before Servicing 1-2
Model Identification..... 1-7
General Specifications..... 1-8
Technical Information - DFI Setting Data Selection 1-11
Technical Information - Launch Control Mode 1-13
Technical Information - PSF (Pneumatic Spring Fork) Front Fork (KX450FD ~)..... 1-15
Unit Conversion Table 1-20

Before Servicing

Before starting to perform an inspection service or carry out a disassembly and reassembly operation on a motorcycle, read the precautions given below. To facilitate actual operations, notes, illustrations, photographs, cautions, and detailed descriptions have been included in each chapter wherever necessary. This section explains the items that require particular attention during the removal and reinstallation or disassembly and reassembly of general parts.

Especially note the following:

Edges of Parts

Lift large or heavy parts wearing gloves to prevent injury from possible sharp edges on the parts.

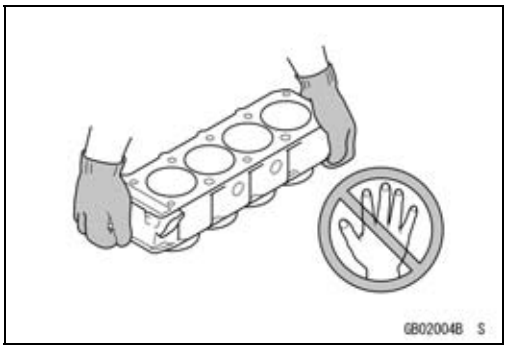

Solvent

Use a high flash-point solvent when cleaning parts. High flash-point solvent should be used according to directions of the solvent manufacturer.

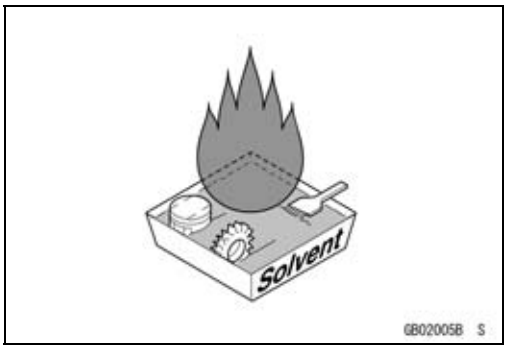

Cleaning Vehicle before Disassembly

Clean the vehicle thoroughly before disassembly. Dirt or other foreign materials entering into sealed areas during vehicle disassembly can cause excessive wear and decrease performance of the vehicle.

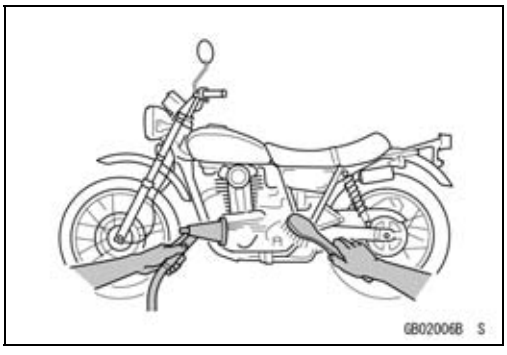

Arrangement and Cleaning of Removed Parts

Disassembled parts are easy to confuse. Arrange the parts according to the order the parts were disassembled and clean the parts in order prior to assembly.

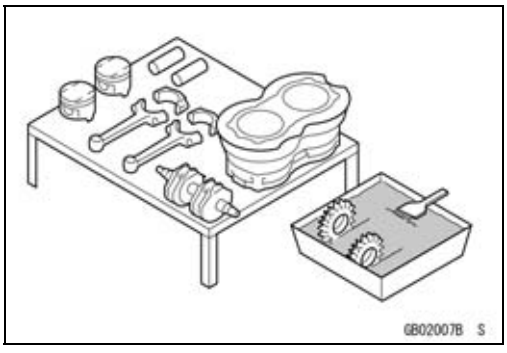

Before Servicing

Storage of Removed Parts

After all the parts including subassembly parts have been cleaned, store the parts in a clean area. Put a clean cloth or plastic sheet over the parts to protect from any foreign materials that may collect before re-assembly.

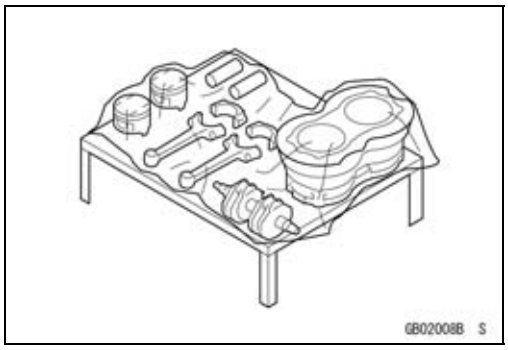

Inspection

Reuse of worn or damaged parts may lead to serious accident. Visually inspect removed parts for corrosion, discoloration, or other damage. Refer to the appropriate sections of this manual for service limits on individual parts. Replace the parts if any damage has been found or if the part is beyond its service limit.

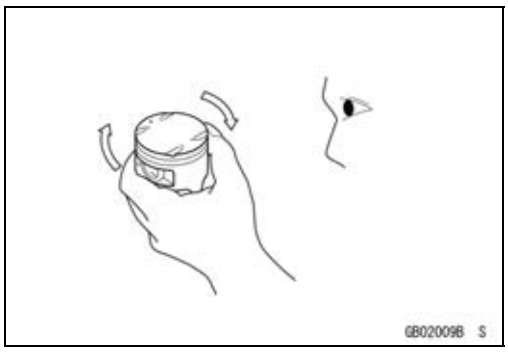

Replacement Parts

Replacement parts must be KAWASAKI genuine or recommended by KAWASAKI. Gaskets, O-rings, oil seals, grease seals, circlips, cotter pins or self-locking nuts must be replaced with new ones whenever disassembled.

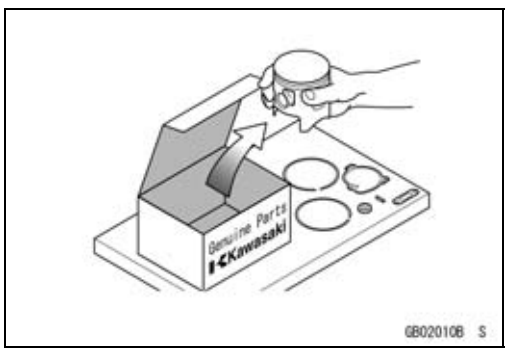

Assembly Order

In most cases assembly order is the reverse of disassembly, however, if assembly order is provided in this Service Manual, follow the procedures given.

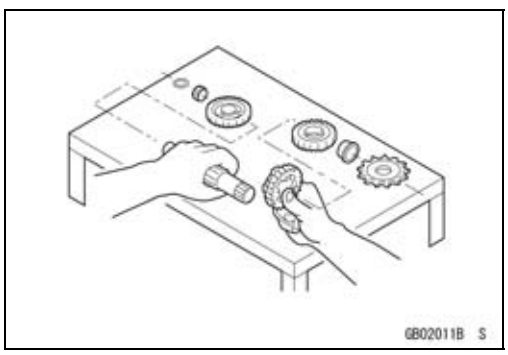

Tightening Sequence

Generally, when installing a part with several bolts, nuts, or screws, start them all in their holes and tighten them to a snug fit. Then tighten them according to the specified sequence to prevent case warpage or deformation which can lead to malfunction. Conversely when loosening the bolts, nuts, or screws, first loosen all of them by about a quarter turn and then remove them. If the specified tightening sequence is not indicated, tighten the fasteners alternating diagonally.

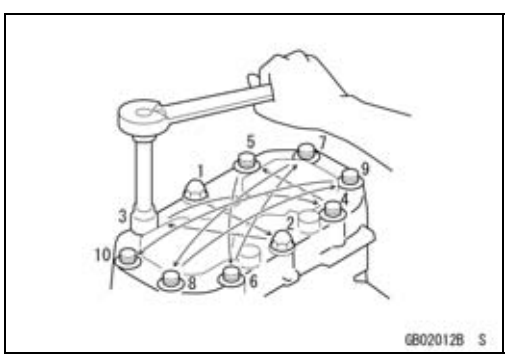

Before Servicing

Tightening Torque

Incorrect torque applied to a bolt, nut, or screw may lead to serious damage. Tighten fasteners to the specified torque using a good quality torque wrench. Often, the tightening sequence is followed twice-initial tightening and final tightening with torque wrench.

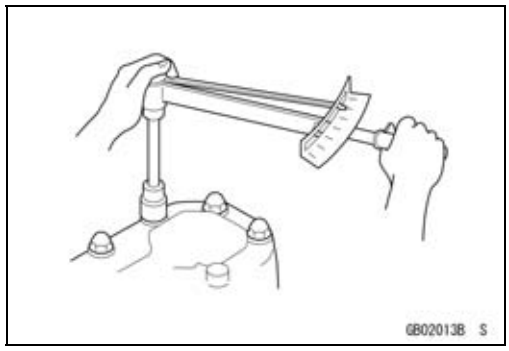

Force

Use common sense during disassembly and assembly, excessive force can cause expensive or hard to repair damage. When necessary, remove screws that have a non -permanent locking agent applied using an impact driver. Use a plastic-faced mallet whenever tapping is necessary.

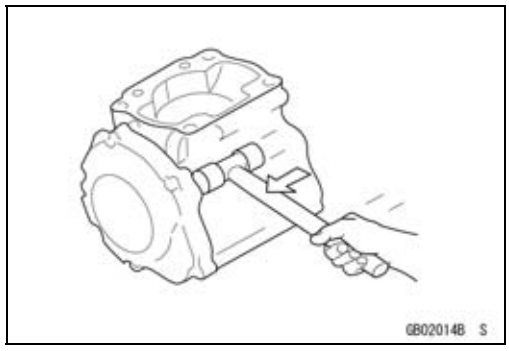

Gasket, O-ring

Hardening, shrinkage, or damage of both gaskets and O-rings after disassembly can reduce sealing performance. Remove old gaskets and clean the sealing surfaces thoroughly so that no gasket material or other material remains. Install new gaskets and replace used O-rings when re-assembling.

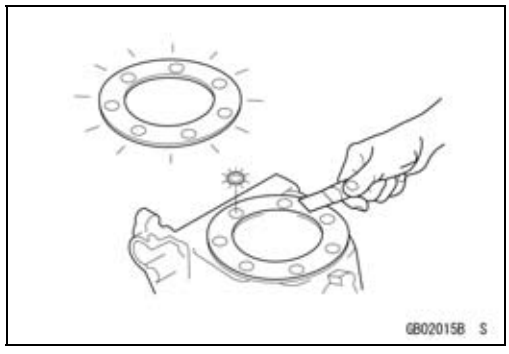

Liquid Gasket, Non-permanent Locking Agent

For applications that require Liquid Gasket or a Non-permanent Locking Agent, clean the surfaces so that no oil residue remains before applying liquid gasket or non-permanent locking agent. Do not apply them excessively. Excessive application can clog oil passages and cause serious damage.

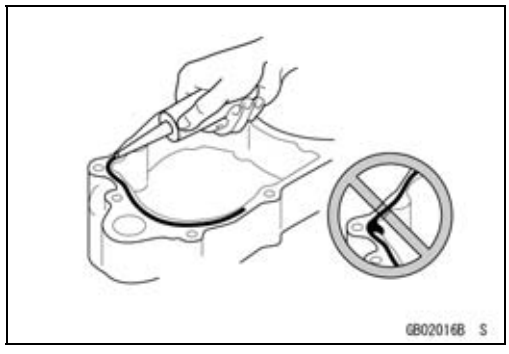

Press

For items such as bearings or oil seals that must be pressed into place, apply small amount of oil to the contact area. Be sure to maintain proper alignment and use smooth movements when installing.

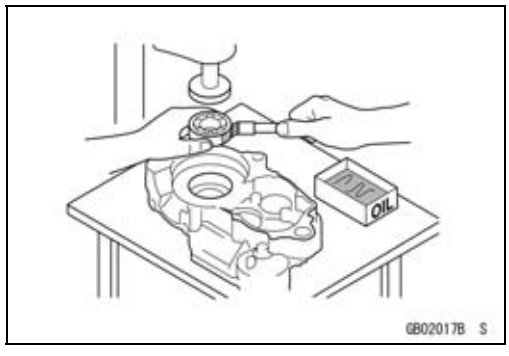

Before Servicing

Ball Bearing and Needle Bearing

Do not remove pressed ball or needle unless removal is absolutely necessary. Replace with new ones whenever removed. Press bearings with the manufacturer and size marks facing out. Press the bearing into place by putting pressure on the correct bearing race as shown.

Pressing the incorrect race can cause pressure between the inner and outer race and result in bearing damage.

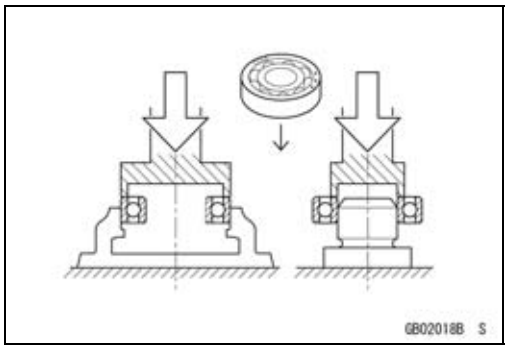

Oil Seal, Grease Seal

Do not remove pressed oil or grease seals unless removal is necessary. Replace with new ones whenever removed. Press new oil seals with manufacture and size marks facing out. Make sure the seal is aligned properly when installing.

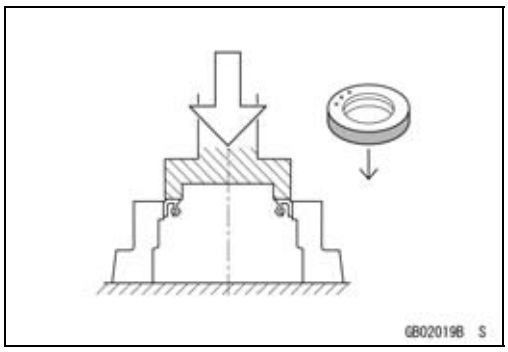

Apply specified grease to the lip of seal before installing the seal.

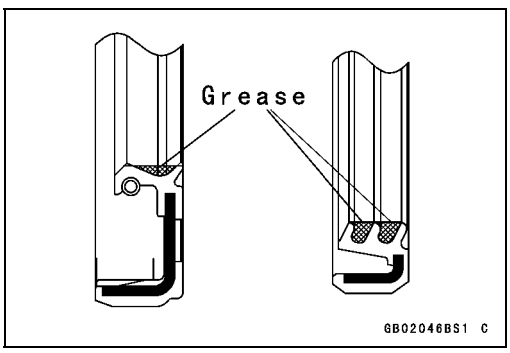

Circlips, Cotter Pins

Replace circlips or cotter pins that were removed with new ones. Take care not to open the clip excessively when installing to prevent deformation.

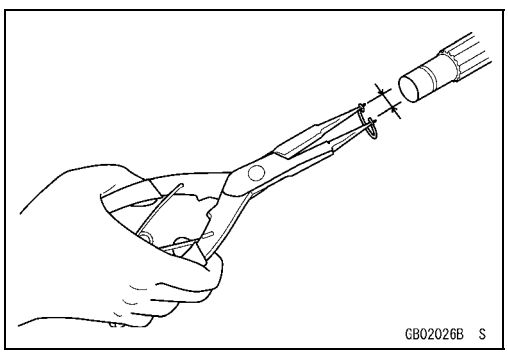

Lubrication

It is important to lubricate rotating or sliding parts during assembly to minimize wear during initial operation. Lubrication points are called out throughout this manual, apply the specific oil or grease as specified.

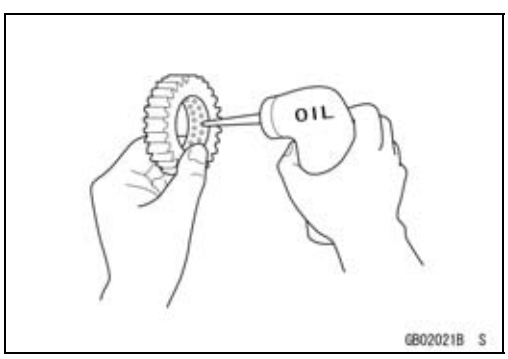

Before Servicing

Direction of Engine Rotation

When rotating the crankshaft by hand, the free play amount of rotating direction will affect the adjustment. Rotate the crankshaft to positive direction (clockwise viewed from output side).

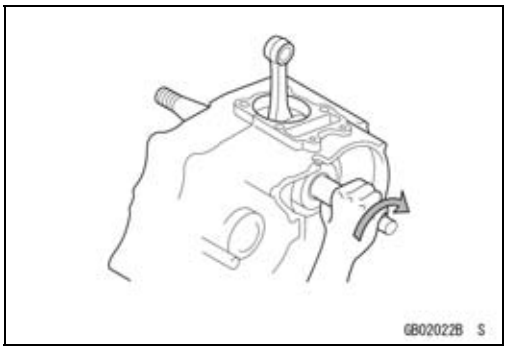

Electrical Leads

A two-color lead is identified first by the primary color and then the stripe color. Unless instructed otherwise, electrical leads must be connected to those of the same color.

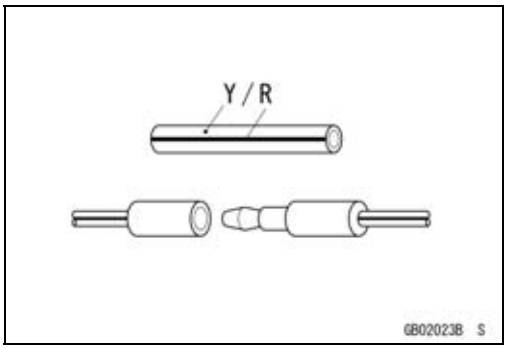

Instrument

Use a meter that has enough accuracy for an accurate measurement. Read the manufacture's instructions thoroughly before using the meter. Incorrect values may lead to improper adjustments.

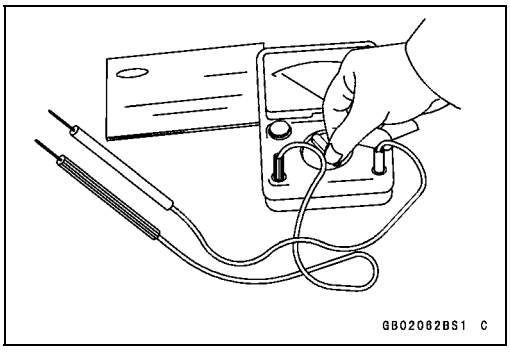

Model Identification

KX450FC Left Side View

KX450FC Right Side View

Frame Number

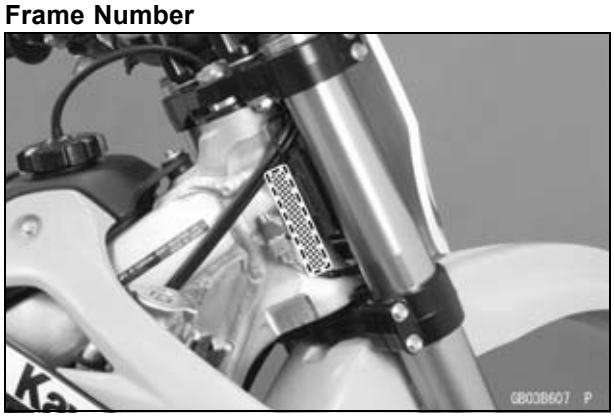

Engine Number

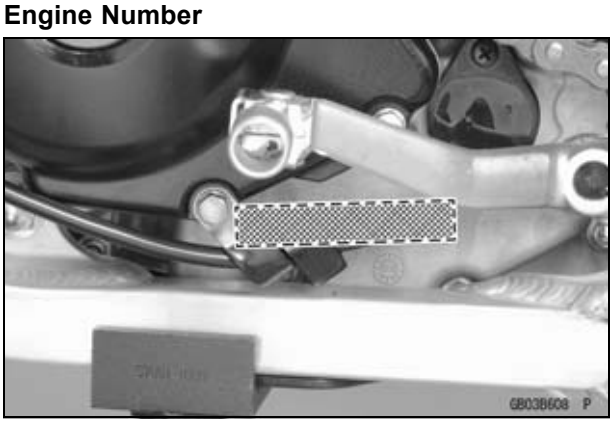

General Specifications

Items	KX450FC ~ FE
Dimensions	
Overall Length	2 180 mm (85.83 in.)
Overall Width	820 mm (32.3 in.)
Overall Height	1 275 mm (50.20 in.)
Wheelbase	1 480 mm (58.27 in.)
Road Clearance	330 mm (13.0 in.)
Seat Height	955 mm (37.6 in.)
Curb Mass:	
KX450FC	113 kg (249 lb)
KX450FD ~	112.5 kg (248 lb)
Front:	
KX450FC	55 kg (121 lb)
KX450FD ~	54.5 kg (120 lb)
Rear	58 kg (128 lb)
Fuel Tank Capacity	6.2 L (1.6 US gal)
Engine	
Type	4-stroke, single cylinder, DOHC 4valve
Cooling System	Liquid-cooled
Bore and Stroke	96.0 × 62.1 mm (3.78 × 2.44 in.)
Displacement	449 cm³ (27.4 cu in.)
Compression Ratio	12.5:1
Fuel System	FI (Fuel Injection), KEIHIN ϕ43
Fuel Type:	
Minimum Octane Rating:	
Research Octane Number (RON)	(AU, EUR, TH) 95
Antiknock Index (RON + MON)/2	(US, CA, BR) 90
Starting System	Primary kick
Ignition System	Digital DC-CDI
Timing Advance	Electronically advanced
Ignition Timing	BTDC 10° @2 000 r/min (rpm)
Spark Plug:	
Standard:	NGK CPR8EB-9
Terminal	Solid post
Option:	NGK CPR9EB-9
Terminal	Solid post
Valve Timing:	
Intake:	
Open	BTDC 36°
Close	ABDC 68°
Duration	284°
Exhaust:	
Open	BBDC 66°
Close	ATDC 38°
Duration	284°

General Specifications

Items	KX450FC ~ FE
Lubrication System	Forced lubrication (semi-dry sump)
Engine Oil:	
Type	API SG, SH, SJ, SL or SM with JASO MA, MA1 or MA2
Viscosity	SAE 10W-40
Capacity	1.2 L (1.3 US qt)
Drive Train	
Primary Reduction System:	
Type	Gear
Reduction Ratio	2.727 (60/22)
Clutch Type	Wet multi disc, Manual
Transmission:	
Type	5-speed, constant mesh, return shift
Gear Ratios:	
1st	1.750 (28/16)
2nd	1.412 (24/17)
3rd	1.188 (19/16)
4th	1.000 (19/19)
5th	0.875 (21/24)
Final Drive System:	
Type	Chain drive
Reduction Ratio	3.846 (50/13)
Overall Drive Ratio	9.178 @Top gear
Frame	
Type	Tubular, semi-double cradle
Steering Angle	42° to either side
Caster (Rake Angle)	26.9°
Trail	113 mm (4.45 in.)
Front Wheel:	
Tire Size	80/100-21 51M
Tire Make/Type	BRIDGESTONE M403, Tube type
Rim Size	21 × 1.60
Rear Wheel:	
Tire Size	120/80-19 63M
Tire Make/Type	BRIDGESTONE M404, Tube type
Rim Size	19 × 2.15
Front Suspension:	
Type	Telescopic fork (upside-down)
Wheel Travel	314 mm (12.4 in.)
Rear Suspension:	
Type	Swingarm (New Uni-trak)
Wheel Travel	315 mm (12.4 in.)
Brake Type:	
Front and Rear	Single disc

General Specifications

Items	KX450FC ~ FE
Effective Disc Diameter:	
Front	225 mm (8.86 in.)
Rear	215 mm (8.46 in.)

Specifications are subject to change without notice, and may not apply to every country.

Technical Information - DFI Setting Data Selection

Overview

The DFI setting can be easily selected among three options to suit various track conditions without using the KX FI calibration kit.

- The setting can be switched by changing the connector [A] on the right side of the steering stem.

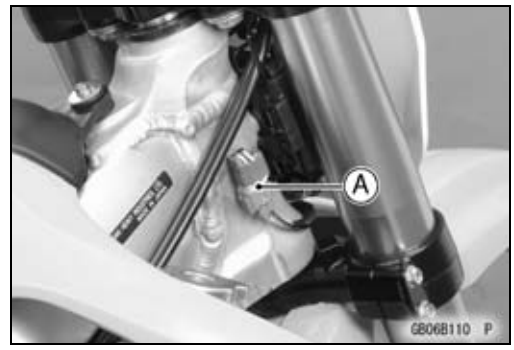

Track Condition	Connector Color
Soft	White [A]
Standard	Green [B]
Hard	Black [C]

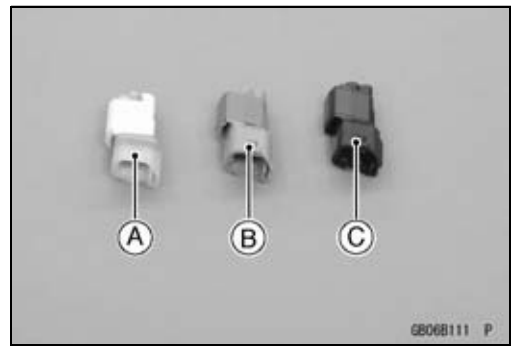

Switching Procedure

- Change the connector with the engine stopped.
- Remove the connector upward [A] from the bracket while pushing the connector stopper [B].
- Select the connector suitable for the track condition and install it to the bracket.

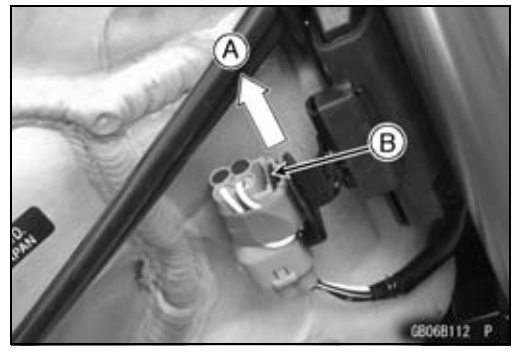

NOTE

- *The ignition timing and fuel injection are set to suit each track condition in the DFI setting.*
- *The DFI setting at start-up is maintained until the engine stops. If the connector is changed during idling, the DFI setting does not change.*
- *The DFI setting is fixed to the standard track condition when the connector is removed with the engine stopped. Always have one of the three connectors attached when riding to prevent mud and dust from accumulating in the connector terminal.*
- *The DFI setting can be changed to suit user's preference using the KX FI calibration kit.*
- *When the connector is not attached, the KX FI calibration kit cannot change the DFI setting.*

Technical Information - DFI Setting Data Selection

Connector Circuit

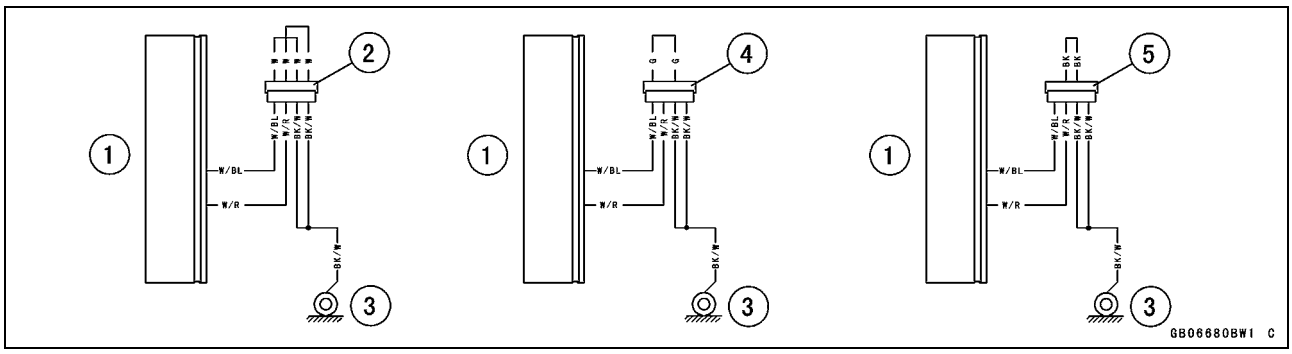

1. ECU
2. White Connector
3. Frame Ground 1
4. Green Connector
5. Black Connector

DFI Setting Map Image

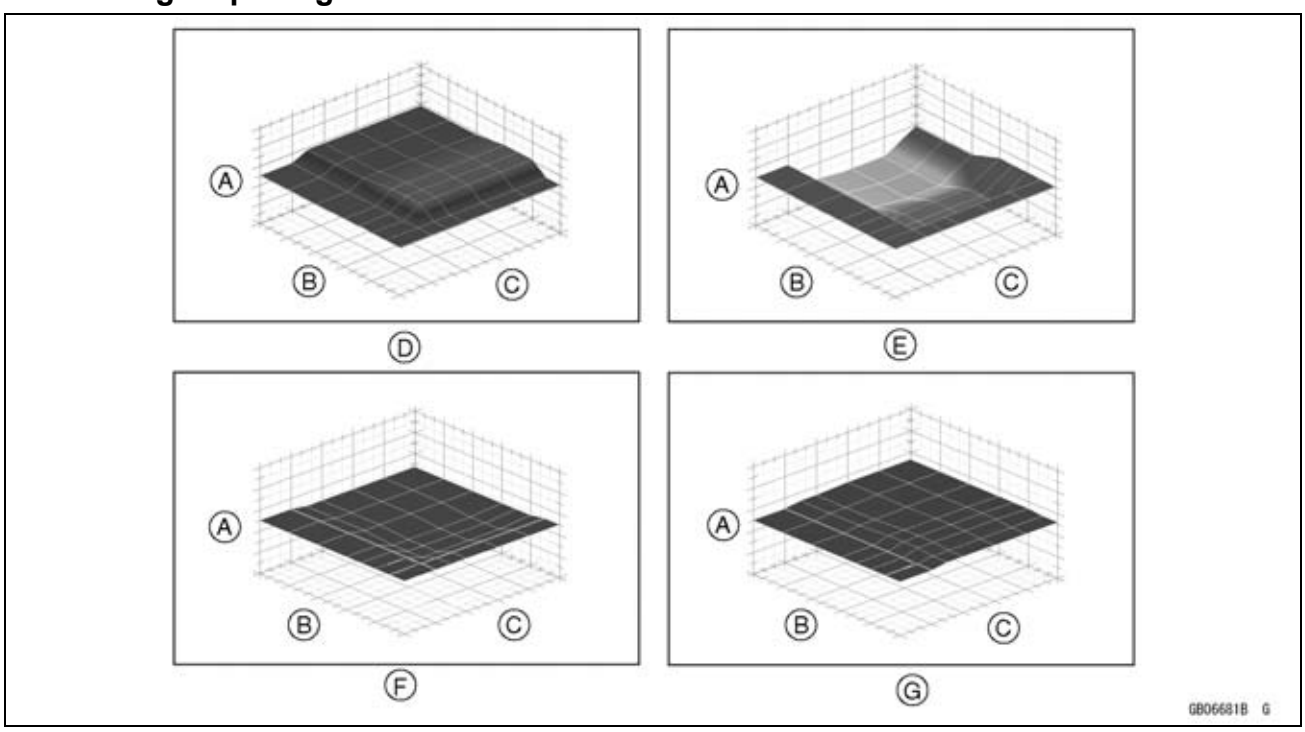

A. Correction Value
B. Throttle Opening
C. Engine Speed
D. Ignition Timing (Soft)
E. Ignition Timing (Hard)
F. Fuel Injection Quantity (Soft)
G. Fuel Injection Quantity (Hard)

Technical Information - Launch Control Mode

Overview

- The launch control mode can be used to adjust ignition timing to reduce rear wheel spin at start-up and help riders get better starts on slippery terrain.
- When the launch control mode is activated, the ignition timing is retarded to reduce rear wheel spin.
- However, the system's effectiveness is dependent on rider skill, technique and terrain conditions.
- The control map of the launch control mode is fixed and cannot be changed even with the use of the KX FI calibration kit.

Launch Control Mode Setting

1. Start the engine.
2. Shift into neutral, 1st, or 2nd gear.
3. Push the launch control mode button [A] for over two seconds.
4. The orange launch control mode indicator light (LED) [B] will blink to indicate the system is operating.
   The indicator light keeps blinking until the system is deactivated.

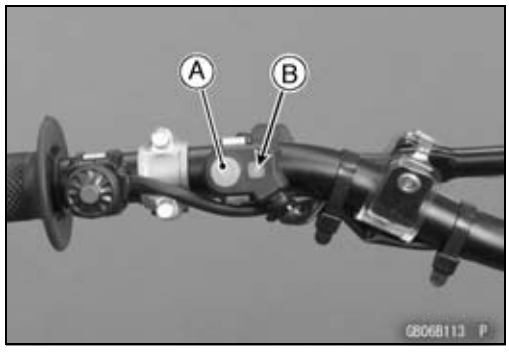

Launch Control Mode Deactivation

- When shifting into 3rd, the system is deactivated automatically and the indicator light stops blinking.

Orange Launch Control Mode Indicator Light (LED)

- Orange lunch control mode indicator light (LED) also works as the FI warning light.

The launch control mode is activated. ..... blinks
The FI warning is activated. ..... lights up

Technical Information - Launch Control Mode

Launch Control Mode Circuit

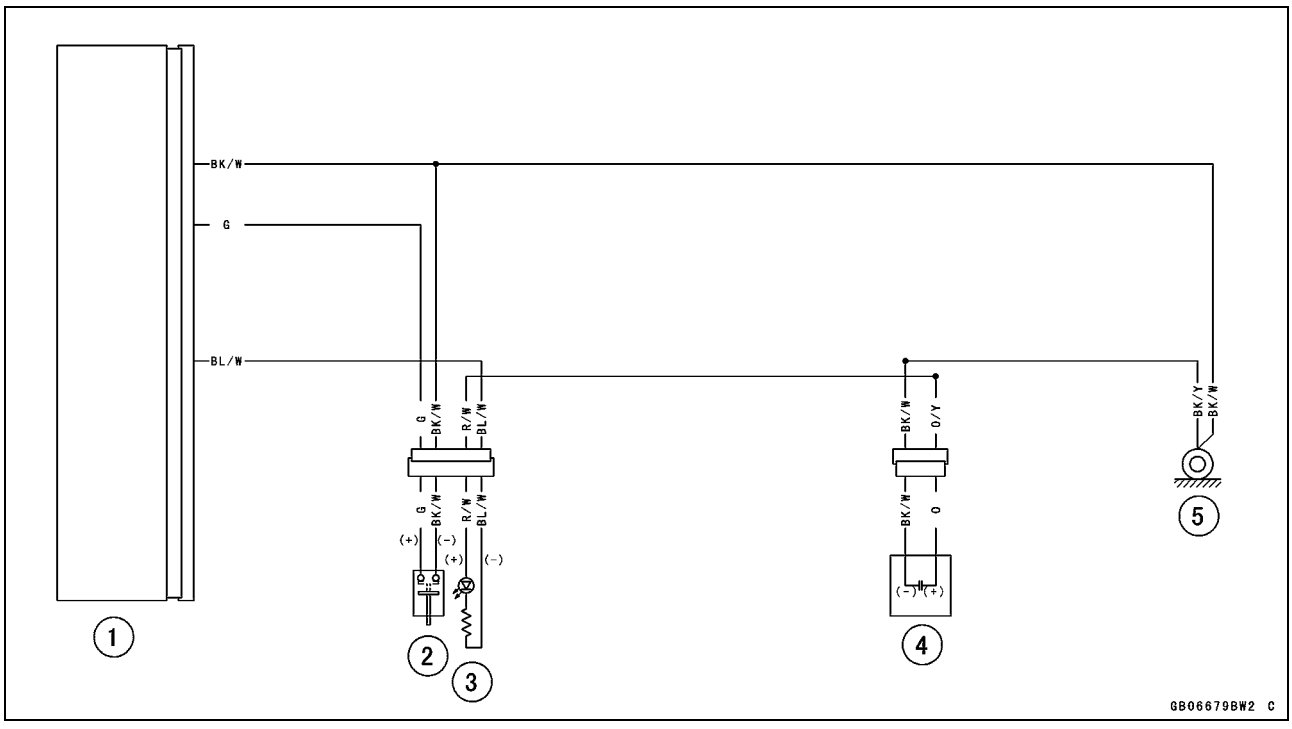

1. ECU
2. Launch Control Mode Button
3. Orange Launch Control Mode Indicator Light (LED)
4. Capacitor
5. Frame Ground 1

Technical Information - PSF (Pneumatic Spring Fork) Front Fork (KX450FD ~)

1) Overview

This model has adopted Pneumatic Spring Fork (PSF) system. Unlike conventional front forks, PSF does not have a main spring in each leg and uses air pressure as a spring force.

[A] Air Valve Plug

2) New Features

Light Weight

- In the conventional design, the main springs constitute about 12% of the total mass of a front fork. Eliminating the main springs has realized a significant reduction in mass (–750 g/1.5 lb.).

Improvement of Operation

- The total friction of the front fork has been reduced by about 20% due to elimination of the main springs that mainly cause friction in the latter half of the stroke.
- The balance spring within the cartridge has a slider that minimizes the friction created during stroke.
- A new oil seal developed specifically for PFS's air pressurizing system for smooth initial movement.

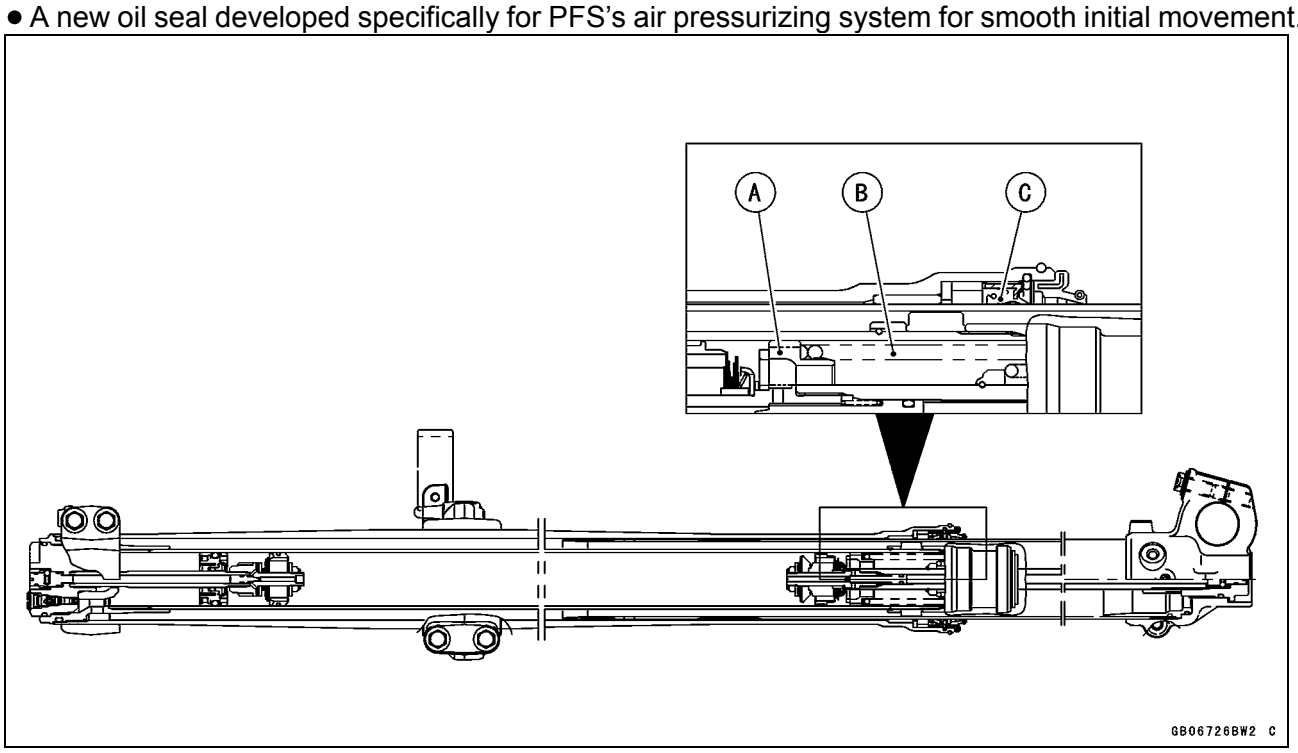

[A] Slider
[B] Balance Spring
[C] New Oil Seal

Improvement of "Bottoming Resistance"/Front Wheel Grip

- The larger cylinder diameter (ϕ24→ϕ32) is possible due to the elimination of the main spring, which contributes to double the pressurized area of the main piston.
- The big piston contributes to increased bottoming resistance near the end of the compression stroke.
- The larger cylinder and piston generates damping force quickly and can maintain it throughout the extension stroke. The pressurized system prevents oil cavitation when the fork is near full extension to maintain consistent and stable damping force.
- Front wheel grip has been further improved due to softer spring force during the rebound stroke.

Technical Information - PSF (Pneumatic Spring Fork) Front Fork (KX450FD ~)

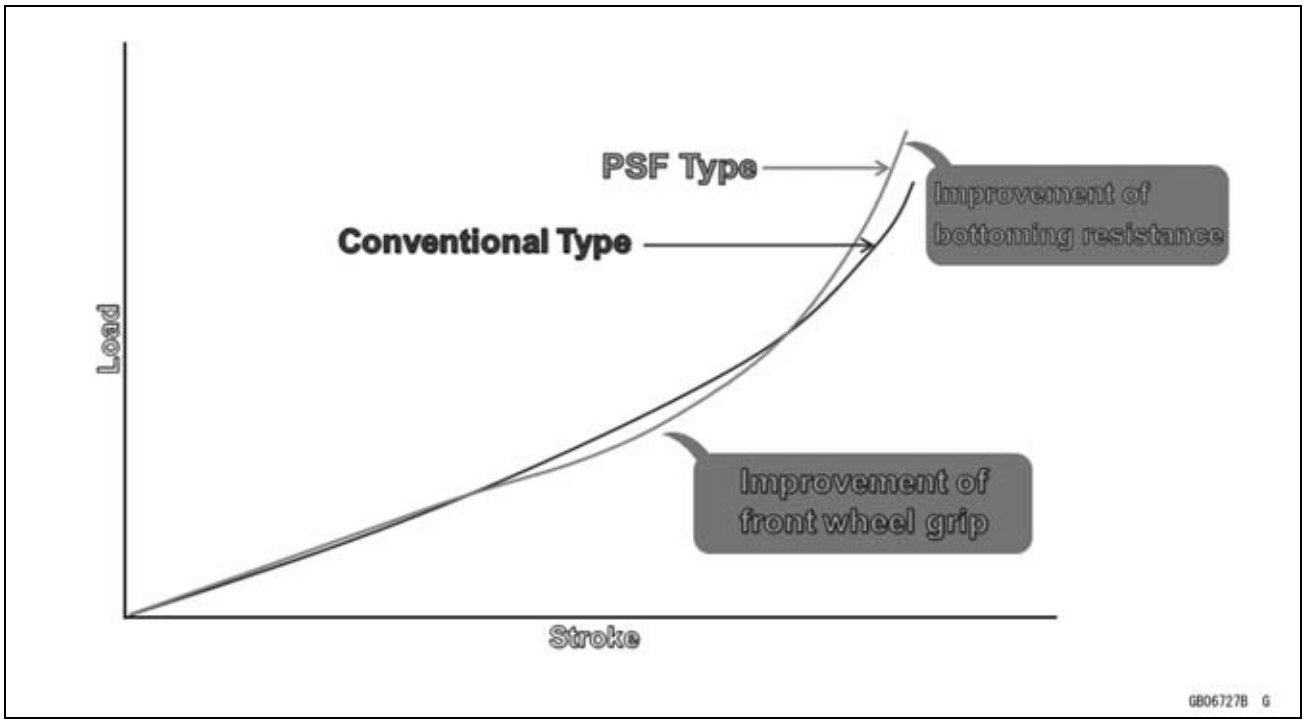

Spring Characteristics Adjustment

- Previously, changing to an optional spring needed complicated disassembly. As for PSF, spring characteristics can be changed by simply changing air pressure.
- Compared to the conventional front fork, PSF has a wider adjustable range of spring characteristics.

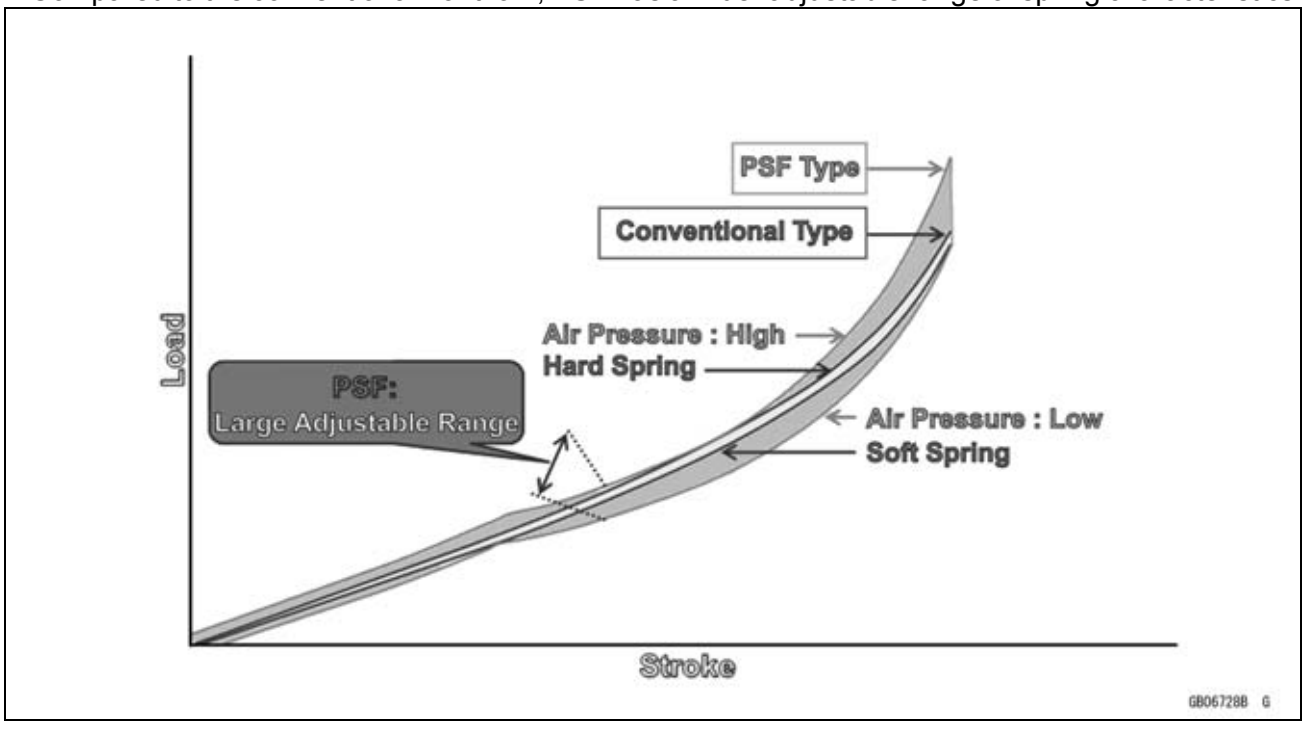

Tool

- For air charging, a commercially available hand air pump can be used. For air pressure adjustment, a tire air pressure gauge can be used.
- Oil change becomes easier since the main spring is eliminated.

3) Inner Structure

- New oil (KHL15-11) is used as operating oil.

Technical Information - PSF (Pneumatic Spring Fork) Front Fork (KX450FD ~)

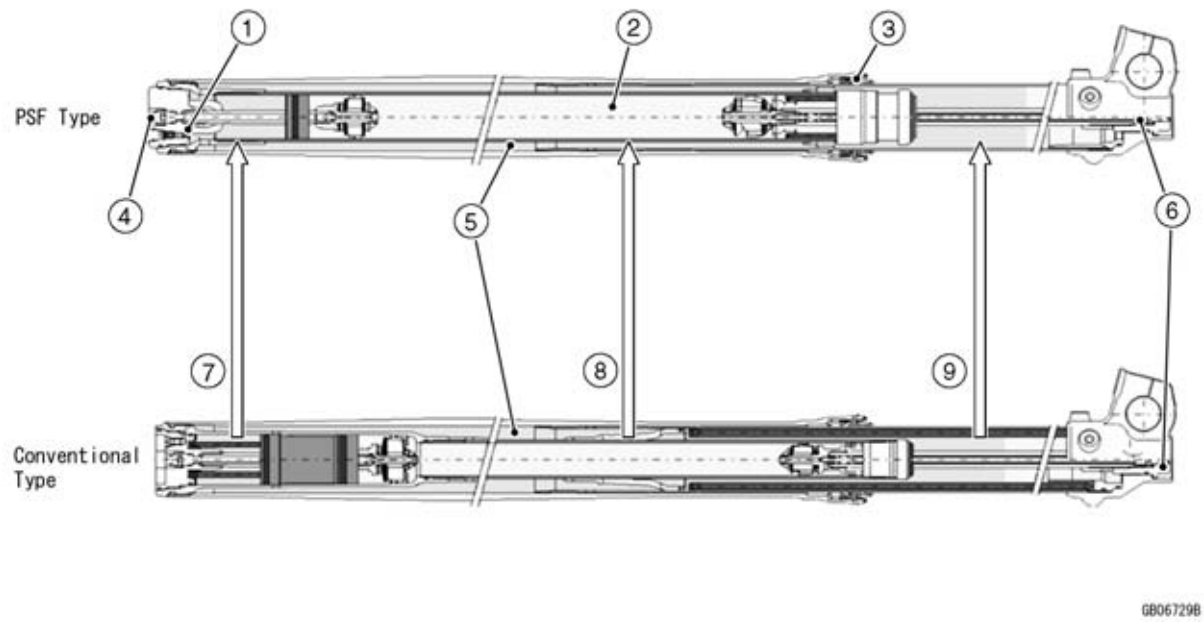

1. Air Pressure Adjustment Part
2. New Oil (KHL15-11)
3. New Oil Seal
4. Compression Damping Force Adjustment Part
5. Air Chamber
6. Rebound Damping Force Adjustment Part
7. Elimination of Pressure Spring
8. Cylinder Diameter Enlargement $\phi 24 \rightarrow \phi 32$
9. Elimination of Main Spring

4) Air Flow

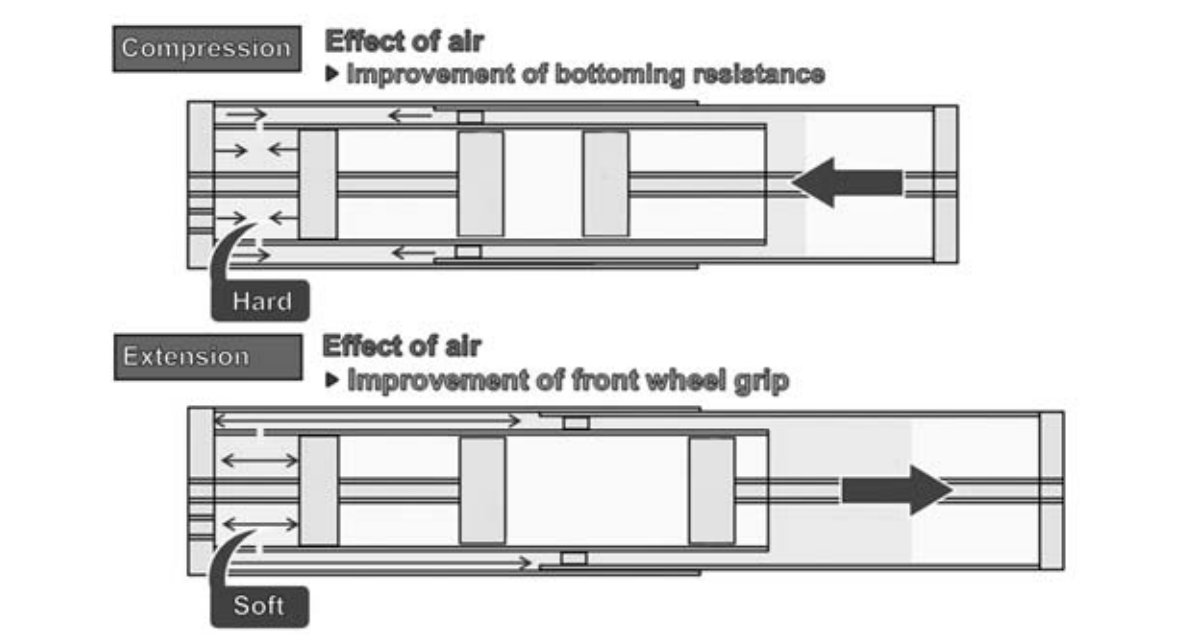

5) Effect of Air Pressure Change

- Changing air pressure has the same effect as changing the conventional spring rates and the changes can be made much more easily.

Technical Information - PSF (Pneumatic Spring Fork) Front Fork (KX450FD ~)

	Easy-to-Do Adjustment	Adjustable Range of Stroke
Conventional Type (with main spring)	Oil level adjustment	Latter half of stroke
PSF Type	Air pressure adjustment + Oil level adjustment	Whole stroke

Adjustable Range

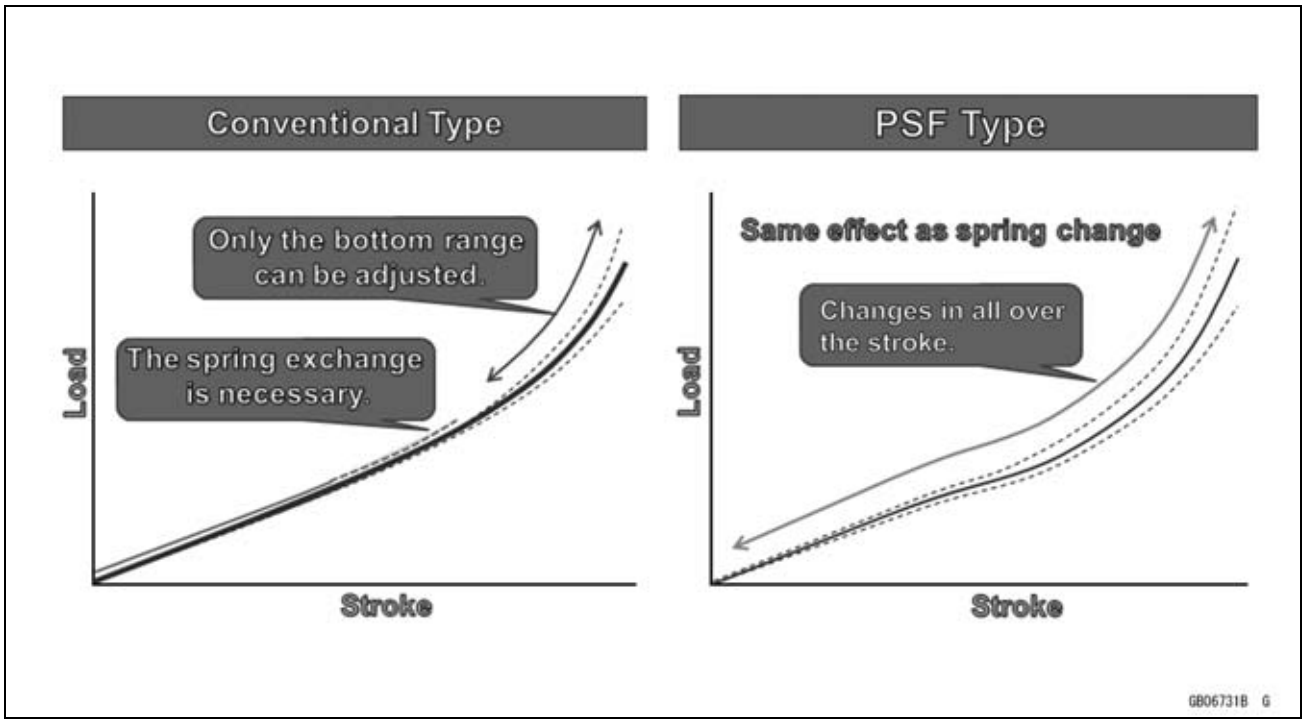

6) Air pressure adjustment

- For air pressure adjustment, use a commercially available hand air pump and the air valve adapter (special tool) [A] (P/No. 57001-0725) supplied with the motorcycle. [Refer to Air Pressure Adjustment (KX450FD ~) in the Suspension chapter.]

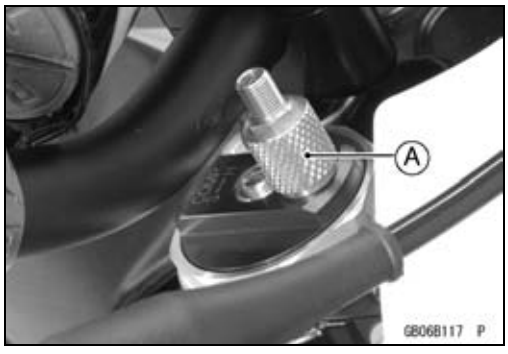

- Check the air pressure before running.

Standard Air Pressure: 240 kPa (2.4 kgf/cm², 35 psi)
Adjustable Range: 220 ~ 280 kPa (2.2 ~ 2.8 kgf/cm², 32 ~ 41 psi)
Maximum Air Pressure: 500 kPa (5.0 kgf/cm², 73 psi)

Technical Information - PSF (Pneumatic Spring Fork) Front Fork (KX450FD ~)

- Be sure to remove the air valve adapter (P/No. 57001 -0725) before running.

⚠ WARNING

When riding and transporting the motorcycle, make sure that the air pressure is within the adjustable range. If used outside the adjustable range, running stability can decrease and cause an accident resulting in serious injury or death.
Be sure to remove the air valve adapter before riding. If the air valve adapter is damaged by a stone during riding, air leakage can cause loss of control and an accident resulting in serious injury or death.

- Be sure to install the air valve plug [A] after air pressure adjustment.

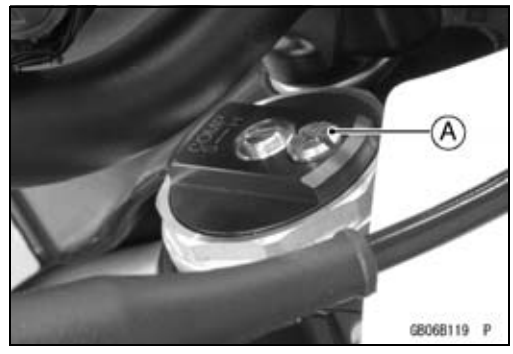

- Be sure to install a plug [A] and cap [B] on the air valve adapter [C] (P/No. 57001-0725) for storage.

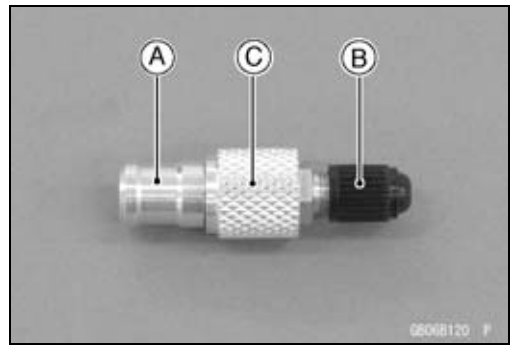

7) Others

- If a oil leak in the front fork or dust seal is found, stop running and replace both the dust seal and oil seal with new ones before next riding.
- Set the air pressure within the adjustable range for transporting.

Unit Conversion Table

Prefixes for Units:

Prefix	Symbol	Power
mega	M	× 1 000 000
kilo	k	× 1 000
centi	c	× 0.01
milli	m	× 0.001
micro	μ	× 0.000001

Units of Mass:

kg	×	2.205	=	lb
g	×	0.03527	=	oz

Units of Volume:

L	×	0.2642	=	gal (US)
L	×	0.2200	=	gal (IMP)
L	×	1.057	=	qt (US)
L	×	0.8799	=	qt (IMP)
L	×	2.113	=	pint (US)
L	×	1.816	=	pint (IMP)
mL	×	0.03381	=	oz (US)
mL	×	0.02816	=	oz (IMP)
mL	×	0.06102	=	cu in.

Units of Force:

N	×	0.1020	=	kg
N	×	0.2248	=	lb
kg	×	9.807	=	N
kg	×	2.205	=	lb

Units of Length:

km	×	0.6214	=	mile
m	×	3.281	=	ft
mm	×	0.03937	=	in.

Units of Torque:

N·m	×	0.1020	=	kgf·m
N·m	×	0.7376	=	ft·lb
N·m	×	8.851	=	in·lb
kgf·m	×	9.807	=	N·m
kgf·m	×	7.233	=	ft·lb
kgf·m	×	86.80	=	in·lb

Units of Pressure:

kPa	×	0.01020	=	kgf/cm²
kPa	×	0.1450	=	psi
kPa	×	0.7501	=	cmHg
kgf/cm²	×	98.07	=	kPa
kgf/cm²	×	14.22	=	psi
cmHg	×	1.333	=	kPa

Units of Speed:

km/h	×	0.6214	=	mph

Units of Power:

kW	×	1.360	=	PS
kW	×	1.341	=	HP
PS	×	0.7355	=	kW
PS	×	0.9863	=	HP

Units of Temperature:

$$\frac{9(°C+40)}{5} - 40 = °F \qquad \frac{5(°F+40)}{9} - 40 = °C$$

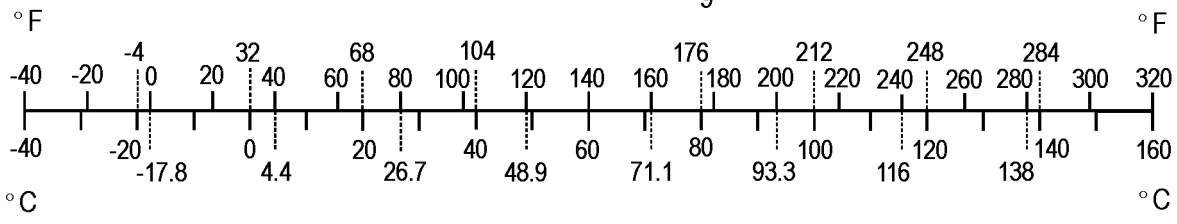

Periodic Maintenance

Table of Contents

Periodic Maintenance Chart 2-3
Torque and Locking Agent 2-5
Specifications 2-10
Special Tools 2-13
Periodic Maintenance Procedures 2-14
  Fuel System (DFI) 2-14
    Fuel Hose and Connections Inspection 2-14
    Throttle Grip (Throttle Cable) Free Play Inspection 2-14
    Throttle Grip (Throttle Cable) Free Play Adjustment 2-14
    Throttle Body Cleaning 2-15
    Fuel Hose Replacement 2-15
    Idle Speed Inspection 2-17
    Idle Speed Adjustment 2-18
    Air Cleaner Element Cleaning and Inspection 2-18
    Fuel Tank Cleaning 2-20
  Cooling System 2-20
    Coolant Level Inspection 2-21
    Coolant Deterioration Inspection 2-21
    Water Hoses and Connections Inspection 2-22
  Engine Top End 2-22
    Valve Clearance Inspection 2-22
    Valve Clearance Adjustment 2-23
    Cylinder Head Warp Inspection 2-25
    Cylinder Wear Inspection 2-25
    Piston/Cylinder Clearance Inspection 2-26
    Piston, Piston Ring and Piston Pin Replacement 2-26
    Exhaust System Inspection 2-26
    Silencer Wool Replacement 2-26
  Clutch 2-27
    Clutch Operation Inspection 2-27
    Clutch Plates Inspection 2-28
  Engine Lubrication System 2-28
    Engine Oil Change 2-29
    Oil Filter Change 2-30
    Breather Hose Inspection 2-31
  Crankshaft/Transmission 2-31
    Crankshaft Inspection 2-31
  Wheels/Tires 2-31
    Air Pressure Inspection/Adjustment 2-31
    Tires Inspection 2-32
    Spoke Tightness Inspection 2-32
    Rim Runout Inspection 2-32
    Wheel Bearing Inspection 2-33
  Final Drive 2-33
    Drive Chain Wear Inspection 2-33
    Drive Chain Slack Inspection 2-34
    Drive Chain Slack Adjustment 2-35
    Drive Chain Lubrication 2-36
    Sprocket Wear Inspection 2-36
    Rear Sprocket Warp (Runout) Inspection 2-36

Brakes 2-37
Brake Lever and Pedal Adjustment 2-37
Brake Fluid Level Inspection 2-38
Brake Fluid Change 2-39
Brake Pad Wear Inspection 2-41
Brake Master Cylinder Cup and Dust Cover Replacement 2-41
Brake Caliper Fluid Seal and Dust Seal Replacement 2-43
Brake Hoses and Connections Inspection 2-46
Brake Hose Replacement 2-46
Suspension 2-48
Front Fork Inspection 2-48
Front Fork Oil Change (each fork leg) 2-48
Rear Shock Absorber Inspection 2-67
Rear Shock Absorber Oil Change 2-67
Swingarm and Uni-Trak Linkage Inspection 2-73
Swingarm and Uni-Trak Linkage Pivot Lubrication 2-74
Steering 2-74
Steering Inspection 2-74
Steering Adjustment 2-74
Steering Stem Bearing Lubrication 2-76
Frame 2-76
Frame Inspection 2-76
Electrical System 2-76
Spark Plug Cleaning and Inspection 2-76
Spark Plug Replacement 2-77
General Lubrication and Cable Inspection 2-77
Lubrication 2-77
Cable Inspection 2-78
Nut, Bolt, and Fastener Tightness Inspection 2-78
Tightness Inspection 2-78

Periodic Maintenance Chart

The maintenance must be done in accordance with this chart to keep the motorcycle in good running condition.

	FREQUENCY / OPERATION	Each race or 2.5 hr	Every 3 races or 7.5 hr	Every 6 races or 15 hr	Every 12 races or 30 hr	See Page
ENGINE	Spark plug - clean and inspect †	●				2-76
	Spark plug - replace		●			2-77
	Clutch - inspect	●				2-27
	Clutch plates - inspect †	●				2-28
	Throttle cable - inspect and adjust	●				2-14
	Air cleaner element - clean	●				2-18
	Air cleaner element - replace	If damaged				2-18
	Throttle body assy - inspect and adjust	●				2-15
	Engine oil - change			●		2-29
	Piston and piston ring - replace			●		2-26
	Cylinder head, cylinder - inspect			●		2-25
	Piston pin - replace				●	2-26
	Valve clearance - inspect †			●		2-22
	Oil filter - replace			●		2-30
	Exhaust system - inspect †	●				2-26
	Silencer wool - change		●			2-26
	Kick pedal and shift pedal - clean	●				–
	Engine sprocket - inspect †	●				2-36
	Coolant level - inspect	●				2-21
	Water hoses and connections - inspect †	●				2-22
	Crankshaft - inspect			●		2-31
	Breather hose - inspect	●				2-31
CHASSIS	Brake - adjust †	●				2-37
	Brake pad wear - inspect †	●				2-41
	Brake fluid level - inspect †	●				2-38
	Brake fluid - change	Every 2 years				2-39
	Brake master cylinder cup and dust cover - replace	Every 2 years				2-41
	Brake caliper fluid seal and dust seal - replace	Every 2 years				2-43
	Brake hoses - replace	Every 4 years				2-46
	Brake hoses, connections - inspect †	●				2-46
	Spoke tightness and rim runout - inspect †	●				2-32
	Wheel bearing - inspect †	●				2-33
	Frame - inspect	●				2-76
	Drive chain wear - inspect †	●				2-33
	Drive chain - inspect and adjust	●				2-34, 2-35
	Drive chain - lubricate	●				2-36

Periodic Maintenance Chart

	FREQUENCY / OPERATION	Each race or 2.5 hr	Every 3 races or 7.5 hr	Every 6 races or 15 hr	Every 12 races or 30 hr	See Page
CHASSIS	Wheels/tires - inspect	●				2-32
	Rear sprocket - inspect †	●				2-36
	Front fork - clean and inspect	●				2-48
	Front fork oil - change			●		2-48
	Rear shock absorber oil - change			●		2-67
	Cable - inspect	●				2-78
	Fuel hose - replace	Every 5 years				2-15
	Fuel hose, connections - inspect †	●				2-14
	Fuel system - clean		●			2-20
	Steering play - inspect †	●				2-74
	Steering stem bearing - lubricate			●		2-76
	Rear shock absorber - inspect	●				2-67
	Swingarm and Uni-Trak linkage pivots - lubricate		●			2-74
	Swingarm and Uni-Trak linkage pivots - inspect †		●			2-73
	Nuts, bolts, fasteners - inspect †	●				2-78
	General lubrication - perform	●				2-77

†: Replace, add, adjust, clean or torque if necessary.

Torque and Locking Agent

Tighten all bolts and nuts to the proper torque using an accurate torque wrench. If insufficiently tightened, a bolt or nut may become damaged, strip an internal thread, or break and then fall out. The following table lists the tightening torque for the major bolts and nuts, and the parts requiring use of a non-permanent locking agent or silicone grease etc.

When checking the tightening torque of the bolts and nuts, first loosen the bolt or nut by half a turn and then tighten to specified torque.

Letters used in the “Remarks” column mean:

AL: Tighten the two clamp bolts alternately two times to ensure even tightening torque.
G: Apply grease.
L: Apply a non-permanent locking agent.
Lh: Left-hand Threads
MO: Apply molybdenum disulfide oil solution.
(mixture of the engine oil and molybdenum disulfide grease in a weight ratio 10:1)
R: Replacement Parts
S: Follow the specified tightening sequence.
Si: Apply silicone grease (ex. PBC grease).

Fastener	Torque			Remarks
	N·m	kgf·m	ft·lb	
Fuel System (DFI)				
Throttle Pulley Cover Bolts	3.4	0.35	30 in·lb	
Throttle Cable Mounting Bolts	3.5	0.36	31 in·lb	
Air Cleaner Duct Mounting Bolt	3.0	0.31	27 in·lb	
Air Cleaner Duct Mounting Nuts	3.0	0.31	27 in·lb	
Air Cleaner Housing Bolts	9.8	1.0	87 in·lb	
Air Cleaner Duct Clamp Screw	2.0	0.20	18 in·lb	
Intake Air Temperature Sensor Bolts	4.15	0.423	37 in·lb	L
Air Cleaner Element Wing Bolt	–	–	–	Hand -tignten
Fuel Pump Bolts	9.8	1.0	87 in·lb	L, S
Water Temperature Sensor	12	1.2	106 in·lb	
Gear Position Switch Screws	2.9	0.30	26 in·lb	L
Cooling System				
Water Pump Cover Bolts	9.8	1.0	87 in·lb	
Coolant Drain Bolt	7.0	0.71	62 in·lb	
Water Pump Impeller Bolt	9.8	1.0	87 in·lb	
Water Hose Clamp Screws	3.0	0.31	27 in·lb	
Radiator Mounting Bolts	9.8	1.0	87 in·lb	
Radiator Screen Bolts	9.8	1.0	87 in·lb	
Engine Top End				
Camshaft Sprocket Bolts	12	1.2	106 in·lb	L
Cylinder Head Cover Bolts	9.8	1.0	87 in·lb	
Camshaft Cap Bolts	9.8	1.0	87 in·lb	MO, S
Cylinder Head Bolts (M10)	59	6.0	44	MO, S
Cylinder Head Bolts (M6)	12	1.2	106 in·lb	S
Water Hose Fitting Bolts	9.8	1.0	87 in·lb	
Oil Line Plug	3.0	0.31	27 in·lb	L
Plug	20	2.0	15	L
Throttle Body Assy Clamp Screw	2.0	0.20	18 in·lb	

Torque and Locking Agent

Fastener	Torque			Remarks
	N·m	kgf·m	ft·lb	
Throttle Body Assy Holder Screws	9.8	1.0	87 in·lb	L
Cylinder Bolt	12	1.2	106 in·lb	S
Camshaft Chain Tensioner Cap Bolt	5.0	0.51	44 in·lb	
Camshaft Chain Tensioner Mounting Bolts	9.8	1.0	87 in·lb	
Oil Pump (Scavenge) Cover Bolts	9.8	1.0	87 in·lb	
Rear Camshaft Chain Guide Bolt	15	1.5	11	
Exhaust Pipe Cover Bolts	12	1.2	106 in·lb	
Exhaust Pipe Holder Nuts	20	2.0	15	S
Muffler Mounting Bolts	20	2.0	15	S
Muffler Clamp Bolt	16.5	1.68	12.2	S
Clutch				
Clutch Cover Bolts	9.8	1.0	87 in·lb	
Right Engine Cover Bolts	9.8	1.0	87 in·lb	
Clutch Spring Bolts	8.8	0.90	78 in·lb	
Clutch Hub Nut	98	10	72	R
Oil Filter Cap Bolt	9.8	1.0	87 in·lb	
Oil Filler Plug	3.5	0.36	31 in·lb	
Engine Lubrication System				
Breather Fitting	15	1.5	11	L
Piston Oil Nozzle Bolt	7.0	0.71	62 in·lb	L
Oil Pressure Relief Valve	15	1.5	11	L
Oil Filter Cap Bolts	9.8	1.0	87 in·lb	
Piston Oil Nozzle	3.0	0.31	27 in·lb	
Engine Oil Drain Bolt (M10)	20	2.0	15	
Engine Oil Drain Bolt (M6)	7.0	0.71	62 in·lb	
Oil Pump (Feed) Cover Bolts	9.8	1.0	87 in·lb	
Oil Pump (Scavenge) Cover Bolts	9.8	1.0	87 in·lb	
Oil Screen (Feed) Mounting Bolts	9.8	1.0	87 in·lb	
Engine Removal/Installation				
Upper Engine Mounting Bolts	49	5.0	36	S
Upper Engine Bracket Bolts	29	3.0	21	S
Middle Engine Mounting Nut	49	5.0	36	R, S
Middle Engine Bracket Nuts	29	3.0	21	R, S
Lower Engine Mounting Nut	49	5.0	36	R, S
Swingarm Pivot Shaft Nut	98	10	72	R, S
Crankshaft/Transmission				
Crankcase Bolts (M6)	12	1.2	106 in·lb	S
Crankcase Bolts (M7)	15	1.5	11	S
Balancer Weight Mounting Nut	52	5.3	38	
Crankcase Bearing Retainer Screws	15	1.5	11	L
Piston Oil Nozzle	3.0	0.31	27 in·lb	
Piston Oil Nozzle Bolt	7.0	0.71	62 in·lb	L
Primary Gear Nut	98	10	72	Lh

Torque and Locking Agent

Fastener	Torque			Remarks
	N·m	kgf·m	ft·lb	
Kick Pedal Bolt	25	2.5	18	L
Ratchet Guide Bolt	8.8	0.90	78 in·lb	
Ratchet Plate Bolt	9.8	1.0	87 in·lb	S
Ratchet Plate Screw	15	1.5	11	L, S
Shift Drum Cam Bolt	24	2.4	18	L
Gear Positioning Lever Nut	8.8	0.90	78 in·lb	
Shift Pedal Bolt	9.8	1.0	87 in·lb	
Wheels/Tires				
Spoke Nipples	Not less than 2.2	Not less than 0.22	Not less than 19 in·lb	
Front Axle Nut	78	8.0	58	S
Front Axle Clamp Bolts	20	2.0	15	AL, S
Rear Axle Nut	108	11.0	79.7	
Final Drive				
Rear Sprocket Nuts	34	3.5	25	R
Engine Sprocket Cover Bolts	9.8	1.0	87 in·lb	
Engine Sprocket Nuts	70	7.1	52	
Brakes				
Brake Reservoir Cap Screws	1.5	0.15	13 in·lb	
Front Master Cylinder Clamp Bolts	8.8	0.90	78 in·lb	S
Brake Lever Pivot Bolt	5.9	0.60	52 in·lb	Si
Brake Lever Pivot Bolt Locknut	5.9	0.60	52 in·lb	
Brake Hose Banjo Bolts	25	2.5	18	
Front Brake Disc Mounting Bolts	9.8	1.0	87 in·lb	L
Caliper Bleed Valve	7.8	0.80	69 in·lb	
Brake Pad Pin	17	1.7	13	
Front Caliper Mounting Bolts	25	2.5	18	
Rear Master Cylinder Mounting Bolts	9.8	1.0	87 in·lb	
Rear Master Cylinder Push Rod Locknut	17	1.7	13	
Brake Pedal Bolt	25	2.5	18	L, G
Rear Brake Disc Mounting Bolts	23	2.3	17	L
Rear Brake Pad Pin Plug	2.5	0.25	22 in·lb	
Rear Caliper Holder Shaft	27	2.8	20	Si
Suspension				
Front Fork Clamp Bolts (Lower)	20	2.0	15	AL
Front Fork Clamp Bolts (Upper)	20	2.0	15	AL
Adjuster Assembly Locknuts	28	2.9	21	
Base Valve Assemblies	30	3.1	22	
Adjuster Assemblies (KX450FC)	55	5.6	41	L
Adjuster Assemblies (KX450FD ~)	55	5.6	41	
Pressure Relief Screws (KX450FC)	1.2	0.12	11 in·lb	
Air Valve Plug (KX450FD ~)	0.2	0.020	18 in·lb	
Front Fork Top Plugs (KX450FC)	30	3.1	22	

Torque and Locking Agent

Fastener	Torque			Remarks
	N·m	kgf·m	ft·lb	
Front Fork Top Plugs (KX450FD ~)	45	4.6	33	
Swingarm Pivot Shaft Nut	98	10	72	R
Rocker Arm Pivot Nut	59	6.0	44	R
Tie-Rod Mounting Nuts	59	6.0	44	R
Rear Shock Absorber Nut (Upper)	39	4.0	29	R
Rear Shock Absorber Nut (Lower)	34	3.5	25	R
Piston Rod Locknut	28	2.9	21	R
Brake Hose Clamp Bolt	2.0	0.20	18 in·lb	
Steering				
Handlebar Clamp Bolts	25	2.5	18	AL
Steering Stem Head Nut	98	10	72	
Steering Stem Nut	4.9	0.50	43 in·lb	T
Front Fork Clamp Bolts (Upper)	20	2.0	15	AL
Front Fork Clamp Bolts (Lower)	20	2.0	15	AL
Handle Holder Nuts	34	3.5	25	R
Brake Hose Clamp Bolt	2.0	0.20	18 in·lb	
Frame				
Rear Frame Mounting Bolts	34	3.5	25	
Footpeg Bracket Bolts (Upper)	34	3.5	25	L
Footpeg Bracket Bolts (Lower)	16.5	1.68	12.2	L
Radiator Shroud Bolts	9.8	1.0	87 in·lb	
Electrical System				
Flywheel Nut	78.5	8.0	57.9	
Stator Coil Bolts	9.8	1.0	87 in·lb	L
Spark Plug	13	1.3	115 in·lb	
Magneto Cover Bolts	9.8	1.0	87 in·lb	
Crankshaft Sensor Bolts	7.0	0.71	62 in·lb	
Breather Fitting	15	1.5	11	L
Ignition Coil Bolts	9.8	1.0	87 in·lb	
Regulator/Rectifier Nuts	10	1.0	89 in·lb	R
Flywheel Nut Cap	3.5	0.36	31 in·lb	
Timing Inspection Cap	3.5	0.36	31 in·lb	

Torque and Locking Agent

Basic Torque for General Fasteners

Threads diameter (mm)	Torque		
	N·m	kgf·m	ft·lb
5	3.4 ~ 4.9	0.35 ~ 0.50	30 ~ 43 in·lb
6	5.9 ~ 7.8	0.60 ~ 0.80	52 ~ 69 in·lb
8	14 ~ 19	1.4 ~ 1.9	10.0 ~ 13.5
10	25 ~ 34	2.6 ~ 3.5	19.0 ~ 25
12	44 ~ 61	4.5 ~ 6.2	33 ~ 45
14	73 ~ 98	7.4 ~ 10.0	54 ~ 72
16	115 ~ 155	11.5 ~ 16.0	83 ~ 115
18	165 ~ 225	17.0 ~ 23.0	125 ~ 165
20	225 ~ 325	23 ~ 33	165 ~ 240

Specifications

Item	Standard	Service Limit
Fuel System		
Throttle Grip Free Play	2 ~ 3 mm (0.08 ~ 0.12 in.)	– – –
Idle Speed	2 000 ±50 r/min (rpm)	– – –
Air Cleaner Element Oil	High quality foam air filter oil	– – –
Cooling System		
Coolant:		
Type (Recommended)	Permanent type antifreeze	– – –
Color	Green	– – –
Mixed Ratio	Soft water 50%, coolant 50%	– – –
Freezing Point	–35°C (–31°F)	– – –
Total Amount	1.1 L (1.2 US qt)	– – –
Engine Top End		
Valve Clearance:		
Exhaust	0.17 ~ 0.22 mm (0.0067 ~ 0.0087 in.)	– – –
Intake	0.10 ~ 0.15 mm (0.0039 ~ 0.0059 in.)	– – –
Cylinder Head Warp	– – –	0.05 mm (0.0020 in.)
Cylinder Inside Diameter (see text)	96.025 ~ 96.037 mm (3.7805 ~ 3.7810 in.)	96.12 mm (3.784 in.)
Piston/Cylinder Clearance	0.045 ~ 0.067 mm (0.0018 ~ 0.0026 in.)	– – –
Clutch		
Clutch Lever Free Play	8 ~ 13 mm (0.3 ~ 0.5 in.)	– – –
Friction Plate Thickness	2.92 ~ 3.08 mm (0.115 ~ 0.121 in.)	2.7 mm (0.11 in.)
Friction Plate Warp	0.15 mm (0.0059 in.) or less	0.3 mm (0.012 in.)
Steel Plate Warp	0.20 mm (0.0079 in.) or less	0.3 mm (0.012 in.)
Engine Lubrication System		
Engine Oil:		
Type	Castrol “POWER1 Racing 4T” 5W-40 or API SG, SH, SJ, SL or SM with JASO MA, MA1 or MA2	– – –
Viscosity	SAE 10W-30, 10W-40, or 10W-50	– – –
Capacity	0.96 L (1.01 US qt) (when filter is not removed) 0.98 L (1.04 US qt) (when filter is remove) 1.20 L (1.27 US qt) (when engine is completely dry)	– – –
Crankshaft/Transmission		
Connecting Rod Big End Side Clearance	0.25 ~ 0.35 mm (0.0098 ~ 0.0138 in.)	0.6 mm (0.02 in.)

Specifications

Item	Standard	Service Limit
Wheels/Tires		
Rim Runout (with tire installed):		
Axial	TIR 1.0 mm (0.04 in.) or less	TIR 2.0 mm (0.08 in.)
Radial	TIR 1.0 mm (0.04 in.) or less	TIR 2.0 mm (0.08 in.)
Tires Air Pressure (Front/Rear)	100 kPa (1.00 kgf/cm², 14 psi)	– – –
Standard Tire:		
Front:		
Size	80/100-21 51M	– – –
Make	BRIDGESTONE	– – –
Type	M403, Tube	– – –
Rear:		
Size	120/80-19 63M	– – –
Make	BRIDGESTONE	– – –
Type	M404, Tube	– – –
Final Drive		
Drive Chain Slack	52 ~ 58 mm (2.0 ~ 2.3 in.)	– – –
Drive Chain 20-link Length	317.5 ~ 318.2 mm (12.50 ~ 12.53 in.)	323 mm (12.7 in.)
Rear Sprocket Warp (Runout)	TIR 0.4 mm (0.016 in.) or less	TIR 0.5 mm (0.020 in.)
Brakes		
Brake Lever Free Play	Adjustable (to suit rider)	– – –
Brake Fluid Type:		
Front	DOT3 or DOT4	– – –
Rear	DOT3 or DOT4	– – –
Brake Pad Lining Thickness:		
Front	4.0 mm (0.16 in.)	1 mm (0.04 in.)
Rear	6.4 mm (0.25 in.)	1 mm (0.04 in.)
Suspension		
Front Fork		
KX450FC:		
Suspension Oil	Kawasaki KHL 15-10 or equivalent	– – –
Amount:		
Cylinder Unit	198 mL (6.69 US oz.)	– – –
Outer Tube	335 mL (11.3 US oz.) (EUR, BR) 345 mL (11.7 US oz.)	(Adjustable Range) 320 ~ 380 mL (10.8 ~ 12.8 US oz.)
KX450FD ~:		
Air Pressure	240 kPa (2.4 kgf/cm², 35 psi)	(Adjustable Range) 220 ~ 280 kPa (2.2 ~ 2.8 kgf/cm², 32 ~ 41 psi)
Suspension Oil:		
Type	Kawasaki Fork Oil KHL 15-11 or equivalent	– – –

Specifications

Item	Standard	Service Limit
Amount:		
Cylinder Unit	343 mL (11.6 US oz.)	– – –
Outer Tube	235 mL (7.95 US oz.)	(Adjustable Range) 190 ~ 265 mL (6.42 ~ 8.96 US oz.)
Rear Shock Absorber		
Suspension Oil	Kawasaki KHV10-K2C or equivalent	– – –
Amount	Approximately 417 mL (14.1 US oz.)	– – –
Electrical System		
Spark Plug Gap	0.8 ~ 0.9 mm (0.03 ~ 0.04 in.)	– – –

Special Tools

Inside Circlip Pliers:
57001-143

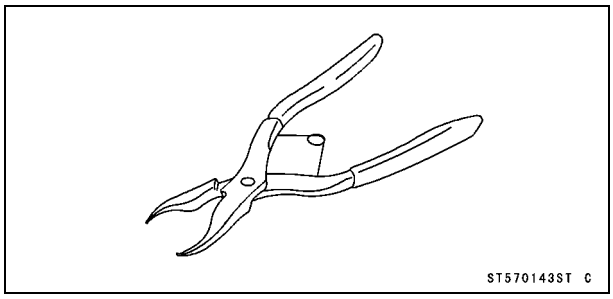

Steering Stem Nut Wrench:
57001-1100

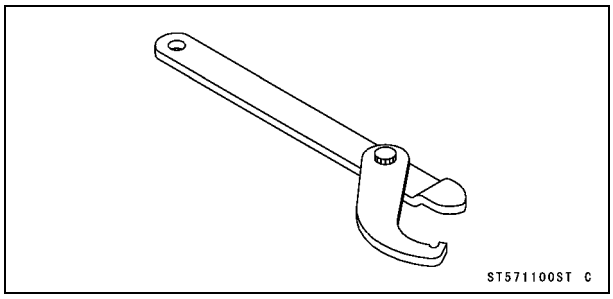

Jack:
57001-1238

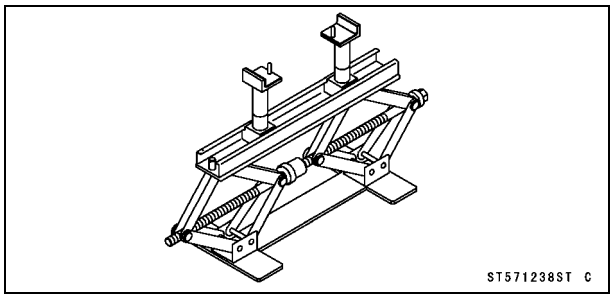

Spark Plug Wrench, Hex 16:
57001-1262

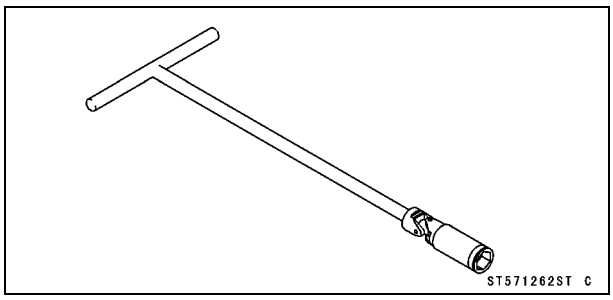

Filler Cap Driver:
57001-1454

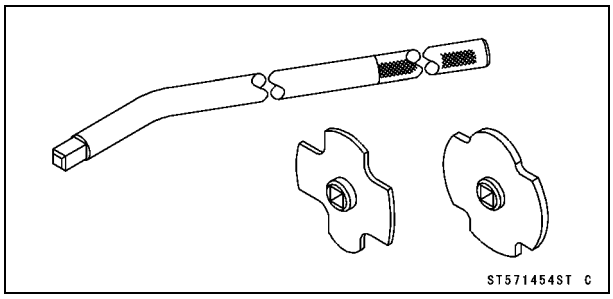

Jack Attachment:
57001-1608

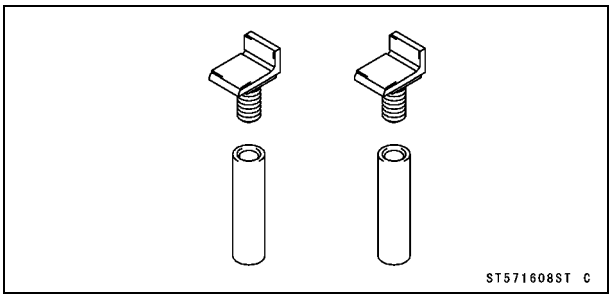

Top Plug Wrench, 49 mm:
57001-1653

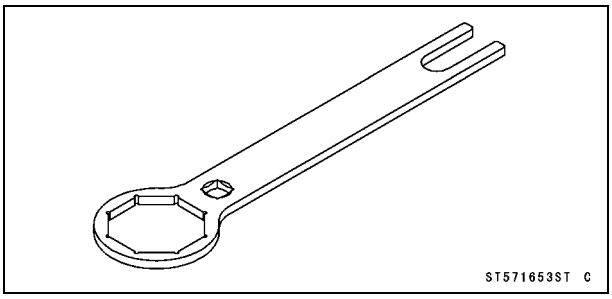

Top Plug Wrench, 36 mm:
57001-1705

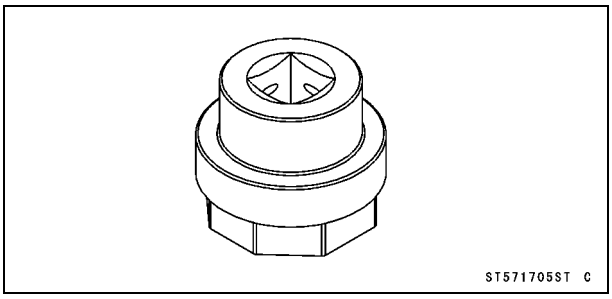

Top Plug Wrench, 21 mm:
57001-1787

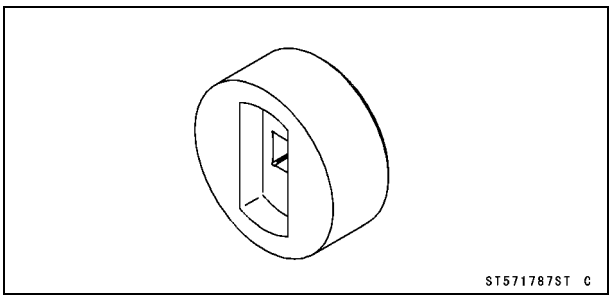

Fuel System (DFI)

Fuel Hose and Connections Inspection

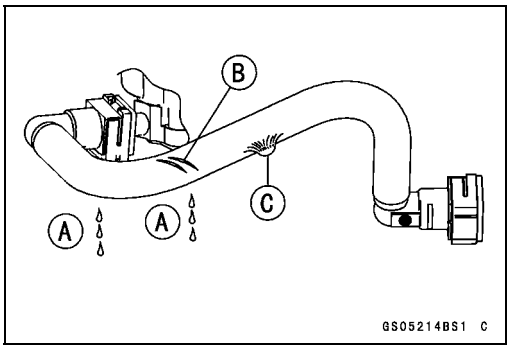

○If the motorcycle is not properly handled, the high pressure inside the fuel line can cause fuel to leak [A] or the hose burst. Remove the fuel tank (see Fuel Tank Removal in the Fuel System (DFI) chapter) and check the fuel hose.

★Replace the fuel hose if any fraying, cracks [B] or bulges [C] are noticed.

- Check that the fuel hose is routed according to Cable, Wire, and Hose Routing section in the Appendix chapter.
- When installing the fuel hose, avoid sharp bending, kinking, flattening or twist, and run the fuel hose with a minimum of bending so that fuel flow will not be obstructed.

★Replace the hose if it has been sharply bent or kinked.

Throttle Grip (Throttle Cable) Free Play Inspection

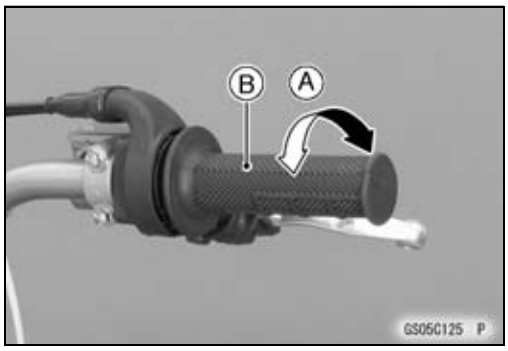

- Check the throttle grip free play [A] by lightly turning the throttle grip [B] back and forth.

Throttle Grip Free Play
Standard: 2 ~ 3 mm (0.08 ~ 0.12 in.)

★If the free play is improper, adjust the throttle cable.

- Check that the throttle grip moves smoothly from full open to close, and the throttle closes quickly and completely in all steering positions by the return spring.

★If the throttle grip does not return properly, check the throttle cable routing, grip free play, and cable damage. Then lubricate the throttle cable.

- Run the engine at the idle speed, and turn the handlebar all the way to the right and left to ensure that the idle speed does not change.

★If the idle speed increase, check the throttle cable free play and the cable routing.

Throttle Grip (Throttle Cable) Free Play Adjustment

KX450FC

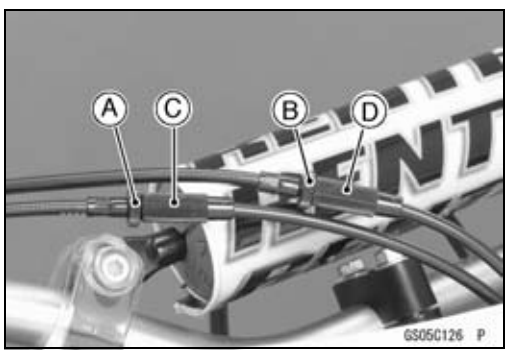

- Loosen the locknuts [A] [B] at the upper end of the throttle cable.
- Screw both throttle cable adjuster [C] [D] to give the throttle grip plenty of play.
- Turn out the decelerator adjuster [C] until there is no play when the throttle grip is completely closed.
- Tighten the locknut [A].
- Turn the accelerator cable adjuster [D] until **2 ~ 3 mm (0.08 ~ 0.12 in.)** of throttle grip play is obtained.
- Tighten the locknut [B].

Periodic Maintenance Procedures

KX450FD ~

- Loosen the locknut [A] at the upper end of the throttle cable.
- Screw the throttle cable adjuster [B] to give the throttle grip plenty of play.
- Tighten the locknut.

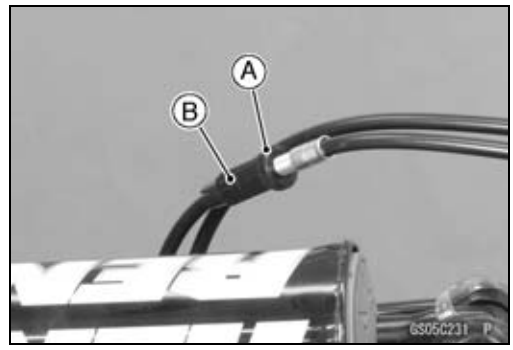

★If the throttle grip free play cannot be adjusted with the adjuster, replace the throttle cables.

- Turn the handlebar from side to side while idling the engine. If idle speed varies, the throttle cable may be poorly routed or it may be damaged.

⚠ WARNING

Operation with improperly adjusted, incorrectly routed or damaged cables could result in an unsafe riding condition. Follow the service manual to make sure to correct any of these conditions.

Throttle Body Cleaning

- Check the throttle bore for cleanliness as follows.

○Remove the throttle body assy (see Throttle Body Assy Removal in the Fuel System (DFI) chapter).

○Check the throttle bore [A] at the throttle valve for carbon deposits by opening the throttle valve.

★If any carbon accumulates, wipe the carbon off the throttle bore and the throttle valve, using a lint-free cloth penetrated with a high flash-point solvent.

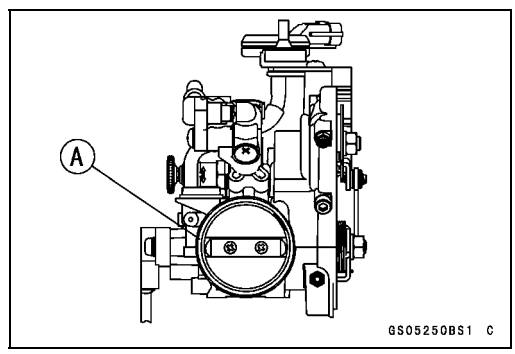

Fuel Hose Replacement

- Remove the fuel tank (see Fuel Tank Removal in the Fuel System (DFI) chapter).
- Be sure to place a piece of cloth around each fuel hose joint.
- Wipe off the dirt of the surface [A] around the connection using a cloth or a soft brush.

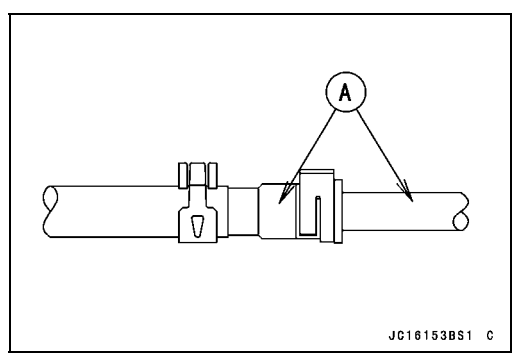

Periodic Maintenance Procedures

When removing with standard tip screwdriver:
- Insert the standard tip screwdriver [A] into the slit [B] on the joint lock [C].
- Turn the driver to disconnect the joint lock.

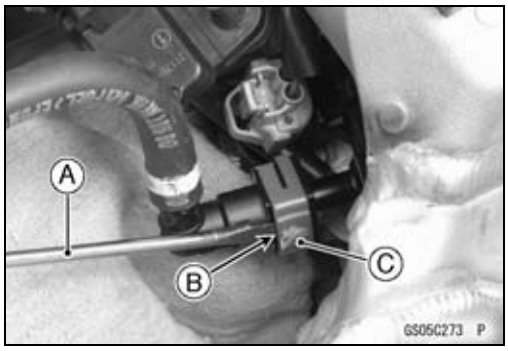

When removing with fingers:
- Open and push up [A] the joint lock [B] with your fingers.

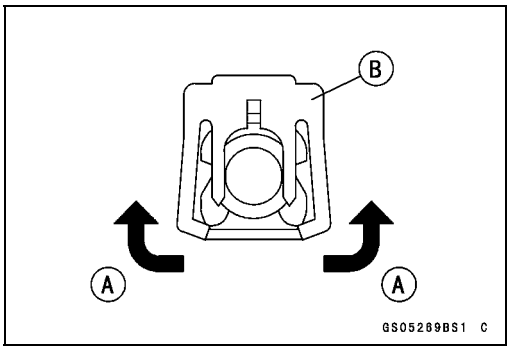

NOTICE
Prying or excessively widening the joint lock ends for fuel hose removal will permanently deform the joint lock, resulting in a loose or incomplete lock that may allow fuel to leak and create the potential for a fire explosion. To prevent fire or explosion from a damaged joint lock, do not pry or excessively widen the joint lock ends when removing the fuel hose. The joint lock has a retaining edge that locks around the housing.

- Pull the fuel hose joint [A] out of the delivery pipe.

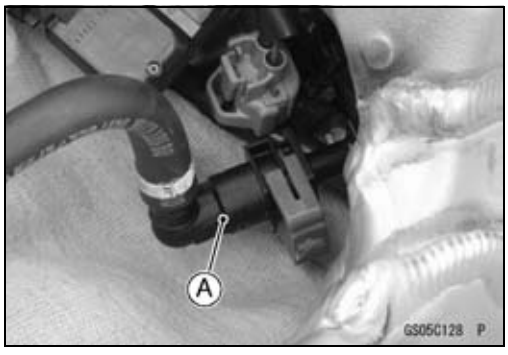

⚠ WARNING
Fuel is flammable and explosive under certain conditions and can cause severe burns. Be prepared for fuel spillage; any spilled fuel must be completely wiped up immediately. When the fuel hose is disconnected, fuel spills out from the hose and the pipe. Cover the hose connection with a clean shop towel to prevent fuel spillage.

- Clean the delivery pipe.
- Cover the delivery pipe with the vinyl bag to keep it clean.

- Remove the vinyl bag on each delivery pipe.
- Check that there are no flaws, burrs, and adhesion of foreign materials on each delivery pipe [A].
- Replace the fuel hose with a new one.
- Run the fuel hose correctly (see Cable, Wire, and Hose Routing section in the Appendix chapter).

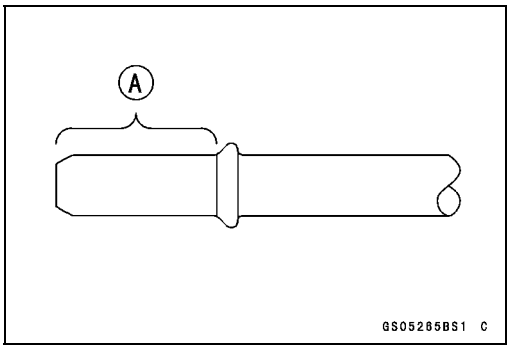

Periodic Maintenance Procedures

- Apply engine oil to the fuel outlet pipe [A] lightly.

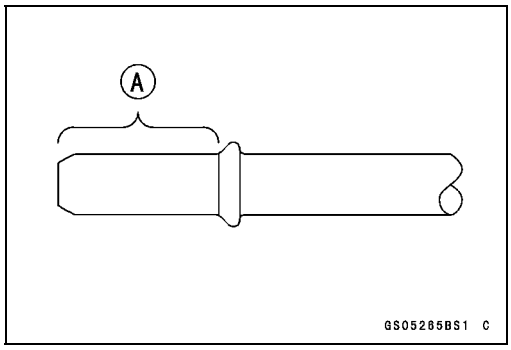

- Insert the fuel hose [A] joint straight onto the delivery pipe until the hose joint clicks.
- Push the joint lock [B].
- Push and pull [C] the fuel hose joint back and forth more than two times and make sure it is locked and does not come off.

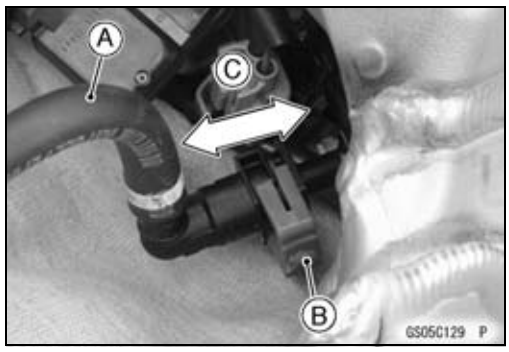

⚠ WARNING

Leaking fuel can cause a fire or explosion resulting in severe burns. Make sure the fuel hose joint is installed correctly on the delivery pipe and that it doesn't leak.

★If it comes off, reinstall the hose joint.

- Install the fuel tank (see Fuel Tank Installation in the Fuel System (DFI) chapter).
- Start the engine and check the fuel hose for leaks.

Idle Speed Inspection

NOTICE

This motorcycle is designed for competition use only. Therefore, the radiator does not incorporate a coolant reserve tank or cooling fan. Prolonged idling of the engine with no airflow through the radiator can cause coolant loss and engine overheating resulting in possible engine damage. Any riding conditions that increase engine temperature will further reduce idling time before coolant loss occurs. These conditions include high ambient temperature, sandy or muddy terrain, or other conditions causing high engine loads at low speeds. Furthermore, warming the engine up excessively before operation, or leaving idling with the hot engine temperature after operation results in the engine overheating, too.

Periodic Maintenance Procedures

- Start the engine and warm it up thoroughly.
- With the engine idling, turn the handlebar to both sides [A].

★If handlebar movement changes the idle speed, the throttle cable may be improperly adjusted or incorrectly routed, or it may be damaged. Be sure to correct any of these conditions before riding (see Cable, Wire, and Hose Routing section in the Appendix chapter).

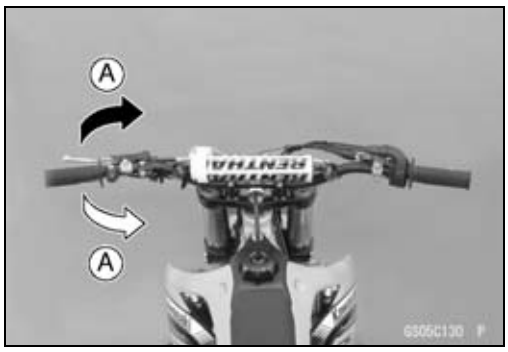

⚠ WARNING

Operation with improperly adjusted, incorrectly routed or damaged cables could result in an unsafe riding condition. Follow the service manual to make sure to correct any of these conditions.

- Check the idle speed, using the engine revolution tester [A] for high accuracy.

★If the idle speed is out of specified range, adjust it.

Idle Speed:
Standard: 2 000 ±50 r/min (rpm)

Idle Speed Adjustment

- Start the engine and warm it up thoroughly.
- Turn the idle adjusting screw [A] until the idle speed is correct.
  To increase idle speed [B]
  To decrease idle speed [C]
- Open and close the throttle a few times to make sure that the idle speed is within the specified range. Readjust if necessary.

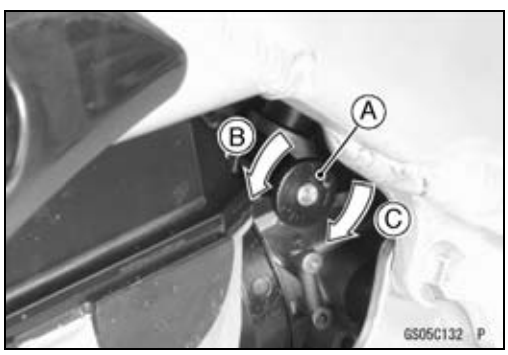

Air Cleaner Element Cleaning and Inspection

NOTE

○*In dusty areas, the element should be cleaned more frequently than recommended interval.*
○*After riding through rain or on muddy roads, the element should be cleaned immediately.*
○*Since repeated cleaning opens the pores of the element, replace it with a new one in accordance with the Periodic Maintenance Chart. Also, if there is a break in the element material or any other damage to the element, replace the element with a new one.*

⚠ WARNING

Gasoline and low flash-point solvents can be flammable and/or explosive and cause severe burns. Clean the element in a well-ventilated area, and take care that there is no spark or flame anywhere near the working areas. Do not use gasoline or low flash-point solvents to clean the element.

Periodic Maintenance Procedures

- Remove:
  Seat (see Seat Removal in the Frame chapter)
  Wing Bolt [A]
  Air Cleaner Element [B]
- Stuff a clean, lint-free towel into the air cleaner duct so no dirt is allowed to enter the throttle body assy.
- Wipe out the inside of the air cleaner housing with a clean damp towel.

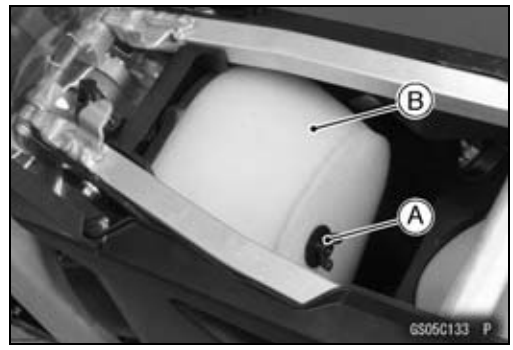

NOTICE
Check inside of the inlet tract and throttle body assy for dirt. If dirt is present, clean the intake tract and throttle body assy thoroughly. You may also need to replace the element and seal the housing and intake tract.

- Separate the element [A] from the frame [B].

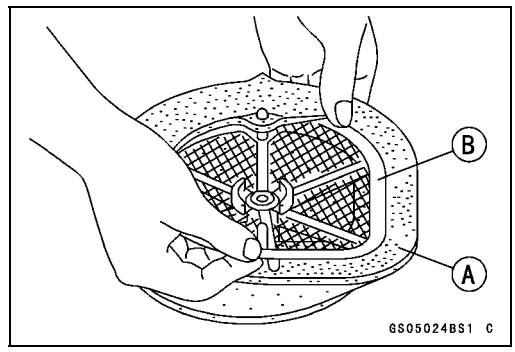

- Clean the element [A] in a bath of a high flash-point solvent using a soft bristle brush.

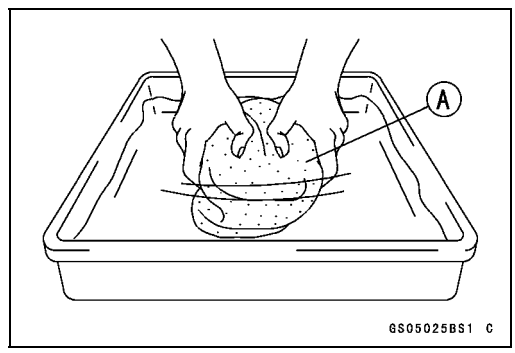

- Squeeze it dry in a clean towel [A]. Do not wring the element or blow it dry; the element can be damaged.
- Check all parts of the element for visible damage.

★If any parts of the element are damaged, replace them.

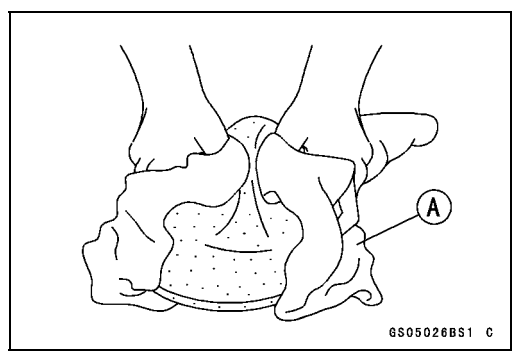

- After cleaning, saturate the element with a high-quality foam-air-filter oil, squeeze out the excess, then wrap it in a clean towel and squeeze it as dry as possible.

○Be careful not to tear the sponge filter.

- Assemble the element.
- Remove the towel from the air cleaner duct.

- Apply grease to all connections and screw holes in the air cleaner housing and intake tract.
- Install the element onto its frame, and coat the element lip and lip seat with a thick layer of all-purpose grease to assure a complete seal.

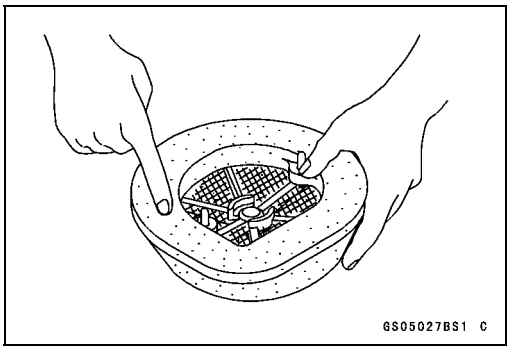

- Install the air cleaner element so that its tab [A] faces upward and its projections [B] align with the holes [C] of the air cleaner housing.
- Tighten the wing bolt.

  Torque - Air Cleaner Element Wing Bolt: Hand-tighten
- Install the seat (see Seat Installation in the Frame chapter).

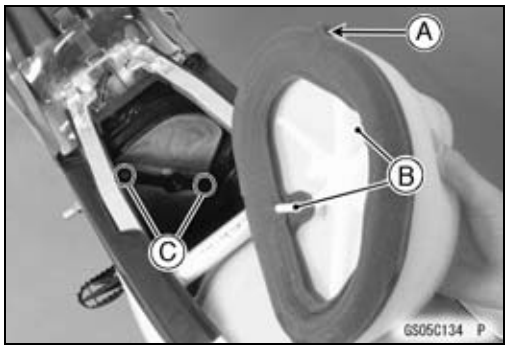

Fuel Tank Cleaning

⚠ WARNING

Gasoline and low flash-point solvents can be flammable and/or explosive and cause severe burns. Clean the tank in a well-ventilated area, and take care that there are no sparks or flame anywhere near the working area. Do not use gasoline or low flash-point solvents to clean the tank.

- Remove the fuel tank and drain the fuel (see Fuel Tank Removal in the Fuel System (DFI) chapter).
- Remove the fuel pump (see Fuel Pump Removal in the Fuel System (DFI) chapter).
- Pour some high flash-point solvent into the fuel tank and shake the tank to remove dirt and fuel deposits.
- Drain the solvent out of the tank.
- Dry the tank with compressed air.
- Install the fuel pump (see Fuel Pump Installation in the Fuel System (DFI) chapter).
- Install the fuel tank (see Fuel Tank Installation in the Fuel System (DFI) chapter).

Cooling System

⚠ WARNING

Coolant can be extremely hot and cause severe burns, is toxic and very slippery. Do not remove the radiator cap or attempt to change the coolant when the engine is hot; allow it cool completely. Immediately wipe any spilled coolant from tires, frame, engine or other painted parts. Do not ingest coolant.

Periodic Maintenance Procedures

Coolant Level Inspection

NOTE

○*Check the level when the engine is cold (room or ambient temperature).*

- Lean the motorcycle slightly until the radiator cap is level to the ground so that the radiator cap is located uppermost in order to exhaust the air accumulated in the radiator.
- Remove the radiator cap [A].

NOTE

○*Remove the radiator cap in two steps. First turn the cap counterclockwise to the first stop and wait there for a few seconds. Then push down and turn it further in the same direction and remove the cap.*

- Check the coolant level. The coolant level [A] should be at the bottom of the filler neck [B].

★If the coolant level is low, add coolant through the filler opening to the bottom of the filler neck. Install the cap.

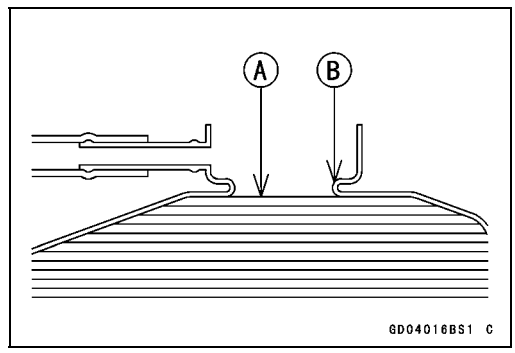

Recommended Coolant

Permanent type antifreeze (soft water and ethylene glycol plus corrosion and rust inhibitor chemicals for aluminum engines and radiators)

Water and Coolant Mixture Ratio

Soft Water: 50%

Coolant: 50%

Freezing Point: –35°C (–31°F)

Total Amount: 1.1 L (1.2 US qt)

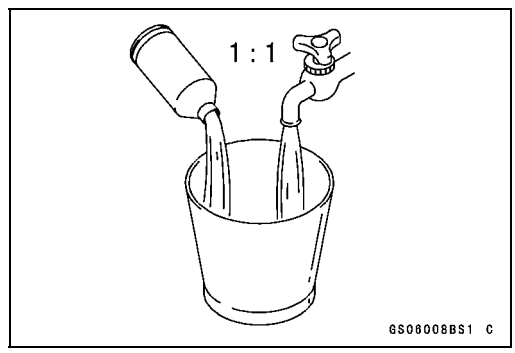

NOTICE
For refilling, add the specified mixture of coolant and soft water. Adding water alone dilutes the coolant and degrades its anticorrosion properties. The diluted coolant can attack the aluminum engine parts. In an emergency, soft water alone can be added. But the diluted coolant must be returned to the correct mixture ratio within a few days.

Coolant Deterioration Inspection

- Visually inspect the coolant.

★If whitish cotton-like wafts are observed, aluminum parts in the cooling system are corroded. If the coolant is brown, iron or steel parts are rusting. In either case, flush the cooling system.

★If the coolant gives off an abnormal smell, check for a cooling system leak. It may be caused by exhaust gas leaking into the cooling system.

Periodic Maintenance Procedures

Water Hoses and Connections Inspection

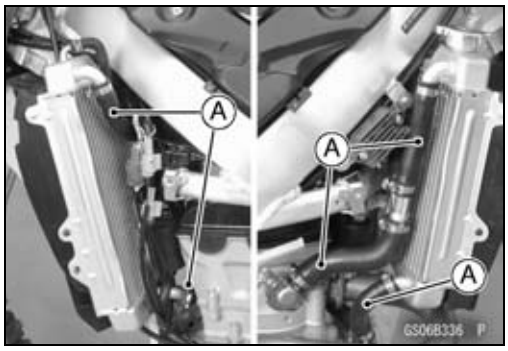

- Remove the radiator shrouds (see Radiator Shroud Removal in the Frame chapter).

○The high pressure inside the water hoses [A] can cause coolant to leak [B] or the hose to burst if the line is not properly maintained. Visually inspect the hoses for signs of deterioration. Squeeze the hoses. A hose should not be hard and brittle, nor should it be soft or swollen.

★Replace the hose if any fraying, cracks [C] or bulges [D] are noticed.

- Check that the hoses are securely connected and clamps are tightened correctly.

Torque - Water Hose Clamp Screws: 3.0 N·m (0.31 kgf·m, 27 in·lb)

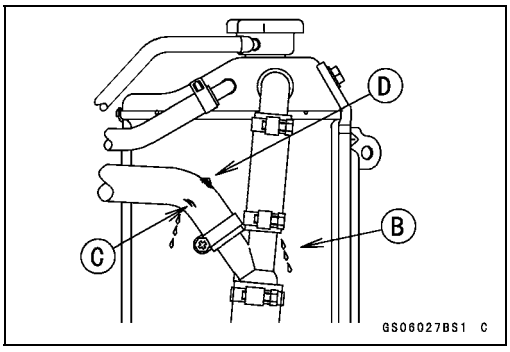

Engine Top End

Valve Clearance Inspection

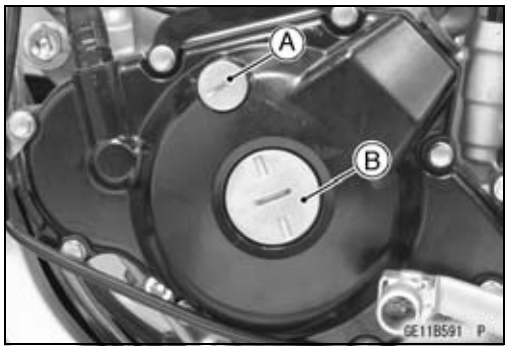

NOTE

○*Valve clearance must be checked and adjusted when the engine is cold (at room temperature).*

- Remove:
  Cylinder Head Cover (see Cylinder Head Cover Removal in the Engine Top End chapter)
  Timing Inspection Cap [A]
  Flywheel Nut Cap [B]

Special Tool - Filler Cap Driver: 57001-1454

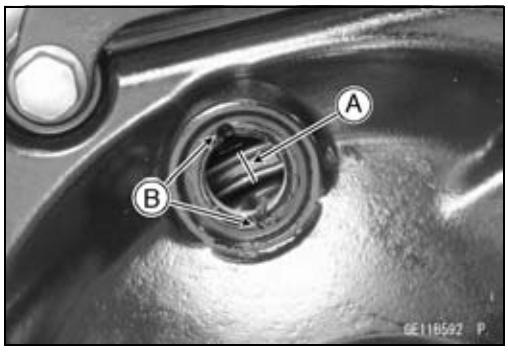

- Bring the piston to the TDC of its compression stroke to inspect the valve clearance (the position at the end of the compression stroke), when the cam lobe faces outside of the camshaft.

○Place a wrench over the flywheel nut and turn it counterclockwise to align the TDC mark [A] with the center of the groove [B] of the inspection hole.

Periodic Maintenance Procedures

- Using a thickness gauge [A], measure the clearance between each cam lobe and valve lifter for all 4 valves.

○For the purpose of adjusting the valve clearances, record the measured values.

Valve Clearance
Standard:

Exhaust	**0.17 ~ 0.22 mm (0.0067 ~ 0.0087 in.)**
Intake	**0.10 ~ 0.15 mm (0.0039 ~ 0.0059 in.)**

★If the valve clearance is not within the specified range, adjust it.

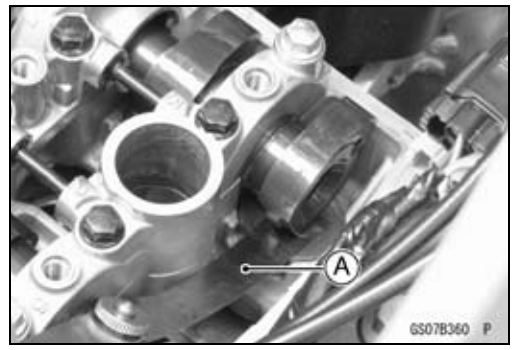

Valve Clearance Adjustment

- Remove:
  Camshaft Caps [A] (see Camshaft Removal in the Engine Top End chapter)
  Camshafts [B] (see Camshaft Removal in the Engine Top End chapter)
- Remove the valve lifters [C] of the applicable valve.
- Remove the shims [D].

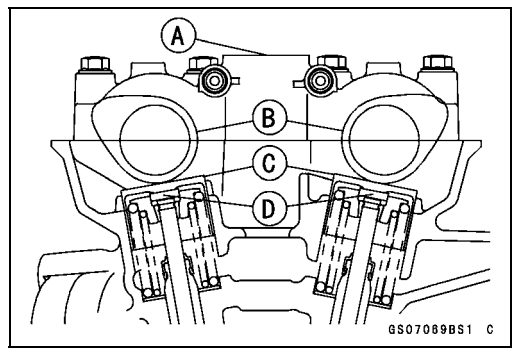

NOTE

○*Mark and record the locations of the valve lifters and shims so that they can be reinstalled in their original positions.*

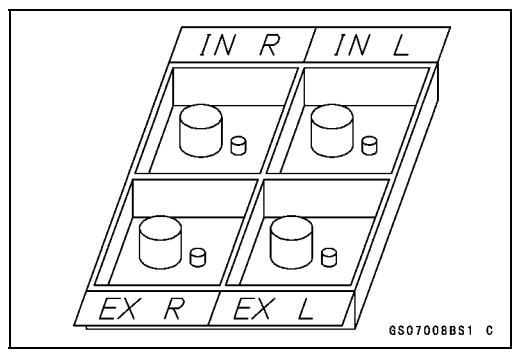

- Clean the shim to remove any dust or oil.
- Measure the thickness of the removed shim [A].
- Select a new shim thickness calculation as follows.
  a + b – c = d
  [a] Present Shim Thickness
  [b] Measured Valve Clearance
  [c] Specified Valve Clearance (Mean Value)
  Exhaust 0.195 mm
  Intake 0.125 mm
  [d] Replace Shim Thickness

Example (Intake):
2.60 + 0.31 – 0.125 = 2.785 mm

○Exchange the shims for the 2.800 size shim.

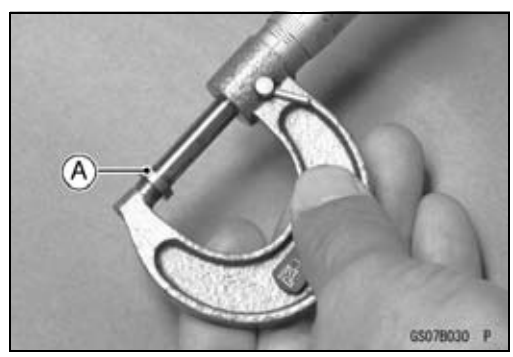

NOTICE
Do not use the shims for another models. This could cause wear of the valve stem end and the valve stem damage.

Adjustment Shims

Thick-ness	P/No.	Mark	Thick-ness	P/No.	Mark
2.00	92025-1870	0	2.55	92025-1881	55
2.05	92025-1871	5	2.575	92025-1985	58
2.10	92025-1872	10	2.60	92025-1882	60
2.15	92025-1873	15	2.625	92180-1059	63
2.20	92025-1874	20	2.65	92025-1883	65
2.25	92025-1875	25	2.675	92180-1194	68
2.30	92025-1876	30	2.70	92025-1884	70
2.35	92025-1877	35	2.725	92180-1195	73
2.375	92180-1058	38	2.75	92025-1885	75
2.40	92025-1878	40	2.775	92180-1196	78
2.425	92025-1982	43	2.80	92025-1886	80
2.45	92025-1879	45	2.85	92025-1887	85
2.475	92025-1983	48	2.90	92025-1888	90
2.50	92025-1880	50	2.95	92025-1889	95
2.525	92025-1984	53	3.00	92025-1890	00

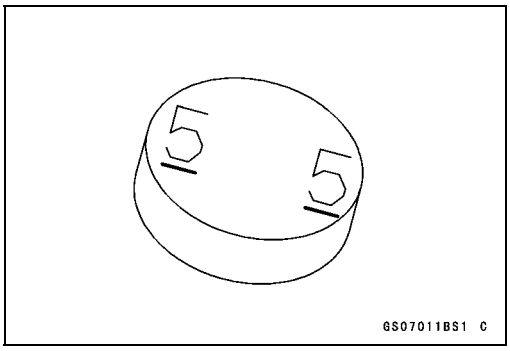

NOTE

○*Be sure to remeasure the clearance after selecting a shim. The clearance can be out of the specified range because of the shim tolerance.*
○*If there is no valve clearance, use a shim that is a few sizes smaller, and remeasure the valve clearance.*

- Install the shim.
○Turn the marked side [A] to upside.
○Apply engine oil to the shim to keep the shim in place during camshaft installation.

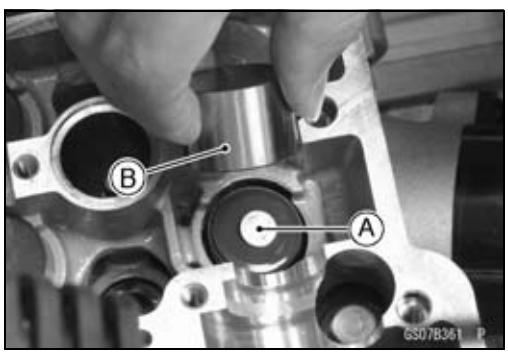

NOTICE

Do not put shim stock under the shim. This may cause the shim to pop out at high rpm, causing extensive engine damage.
Do not grind the shim. This may cause it to fracture, causing extensive engine damage.

- Apply engine oil to the valve lifter [B] surface and install the lifter.
- Install:
  Camshafts (see Camshaft Installation in the Engine Top End chapter)
  Camshaft Caps (see Camshaft Installation in the Engine Top End chapter)
- Recheck the valve clearance and readjust if necessary.
- Install the removed parts (see appropriate chapters).

Periodic Maintenance Procedures

Cylinder Head Warp Inspection

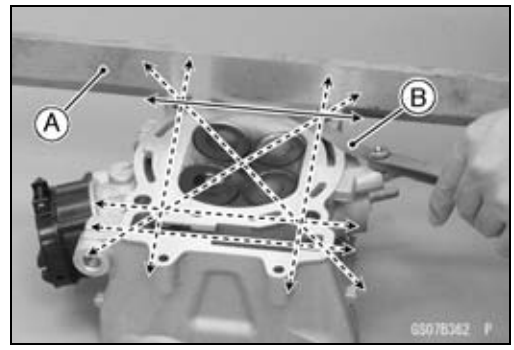

- Remove the cylinder head (see Cylinder Head Removal in the Engine Top End chapter).
- Lay a straightedge [A] across the lower surface of the head at several different points, and measure warp by inserting a thickness gauge [B] between the straightedge and head.

Cylinder Head Warp
Service Limit: 0.05 mm (0.0020 in.)

★If warp exceeds the service limit, repair the mating surface. Replace the cylinder head if the mating surface is badly damaged.

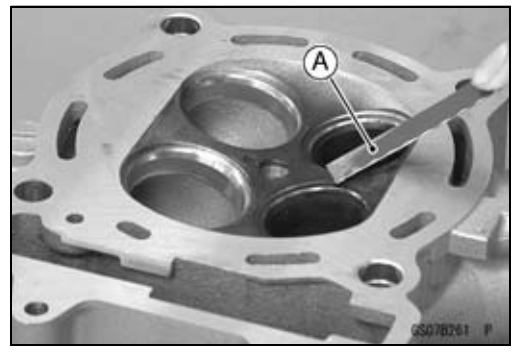

- Remove the valves (see Valve Removal in the Engine Top End chapter).
- Scrape the carbon out of the combustion chamber and exhaust port with a scraper [A] or a suitable tool.
- Clean the cylinder head, using high flash-point solvent.
- Blow out any particles which may obstruct the oil passage in the cylinder head using compressed air.
- Install the valves (see Valve Installation in the Engine Top End chapter).

Cylinder Wear Inspection

NOTE

○*Measure the cylinder inside diameter when the cylinder is cold (at room temperature).*

- Visually inspect the inside of the cylinder for scratches and abnormal wear.

★If the cylinder is damaged or badly worn, replace it with a new one.

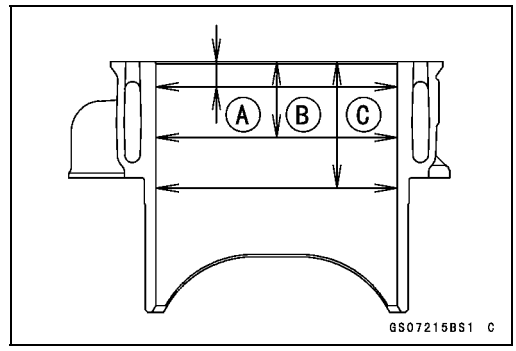

- Take a side-to-side and a front-to-back measurement shown in the figure (total 6 measurements).

○The cylinder wear is uneven in different places.

10 mm (0.39 in.) [A]
30 mm (1.2 in.) [B]
50 mm (2.0 in.) [C]

Cylinder Inside Diameter

Standard:	**96.025 ~ 96.037 mm (3.7805 ~ 3.7810 in.), and less than 0.01 mm (0.0004 in.) difference between any two measurements.**
Service Limit:	**96.12 mm (3.784 in.), or more than 0.05 mm (0.002 in.) difference between any two measurements.**

★If any of the cylinder inside diameter measurements exceeds the service limit, the cylinder must be replaced with a new one.

○Since the PLATING cylinder cannot be bored or honed.

Periodic Maintenance Procedures

Piston/Cylinder Clearance Inspection

The piston/cylinder clearance is measured whenever a piston or cylinder is replaced with a new one. The standard piston/cylinder clearance must be adhered to whenever the cylinder is replaced.

If only a piston is replaced, the clearance may exceed the standard slightly. But it must be within the standard, in order to avoid piston seizure.

The most accurate way to find the piston clearance is by making separate piston and cylinder diameter measurements and then computing the difference between the two values. Measure the piston diameter as just described, and measure the cylinder diameter at the very bottom of the cylinder.

Piston/Cylinder Clearance
Standard: 0.045 ~ 0.067 mm (0.0018 ~ 0.0026 in.)

Piston, Piston Ring and Piston Pin Replacement

- Refer to the Cylinder and Piston section in the Engine Top End chapter.

Exhaust System Inspection

- The exhaust system, in particular the muffler body, is designed to reduce exhaust noise and conduct the exhaust gases away from the rider while minimizing power loss. If carbon has built up inside the muffler body, exhaust efficiency is reduced, causing engine performance to drop.

★If the muffler body is badly damaged, dented, cracked or rusted, replace it.

★If the exhaust noise becomes too loud or engine performance drops, replace the silencer wool.

Silencer Wool Replacement

- Remove:
  Right Side Cover (see Side Cover Removal in the Frame chapter)
  Muffler Cover Bolts [A]
  Muffler Mounting Bolt [B]

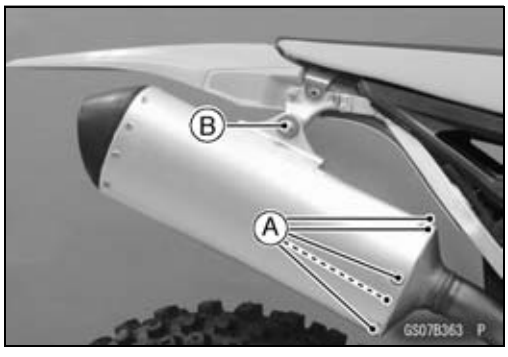

- Remove the muffler cover [A].

○Tap the bracket [B] with a plastic hammer [C] to separate the cover and pipe.

- Replace the silencer wool with a new one.
- Clean the adhered silicone sealant.

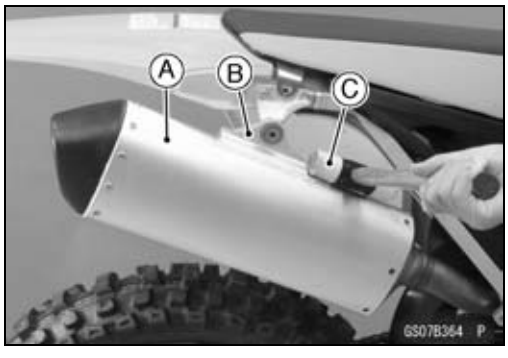

Periodic Maintenance Procedures

- Insert the new silencer wool [A] and muffler cover [B].
○Fit the pipe end [C] and the exhaust hole of the baffle.
- Apply a non-permanent locking agent to the threads of the muffler cover bolts, and tighten them.
- Tighten:

Torque - Muffler Mounting Bolt: 20 N·m (2.0 kgf·m, 15 ft·lb)

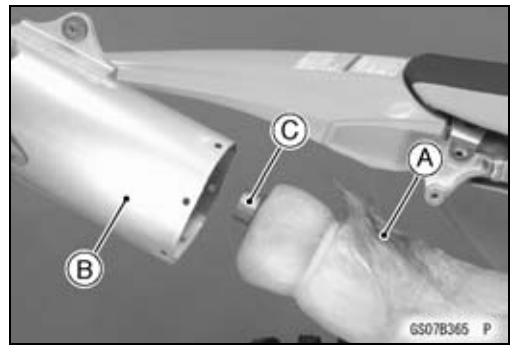

- Using a high flash-point solvent, clean off any oil or dirt that may be on the silicone sealant coating area. Dry them with a clean cloth.
- Apply silicone sealant to the mating surface [A].
- Install:
  Right Side Cover (see Side Cover Installation in the Frame chapter)

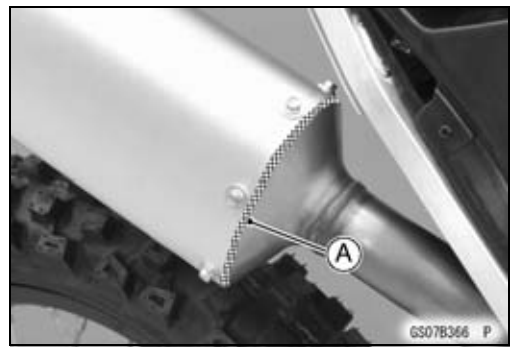

Clutch

Clutch Operation Inspection

Clutch Lever (Clutch Cable) Free Play Inspection

- Slide the clutch cable adjuster knob [A] out of place.
- Check that the clutch cable upper end [B] is fully seated in the adjusting bolt [C].
- Install the knob to original position.

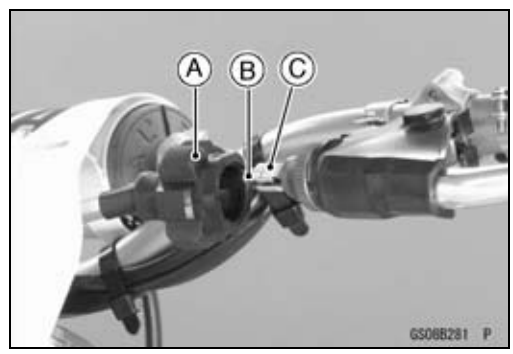

- Pull the clutch lever [A] lightly, and check the flee play [B].

Clutch Lever Free Play
Standard: 8 ~ 13 mm (0.3 ~ 0.5 in.)

★If the play is too wide, the clutch may not release fully. If the play is too narrow, the clutch may not engage fully. In either case, adjust it.

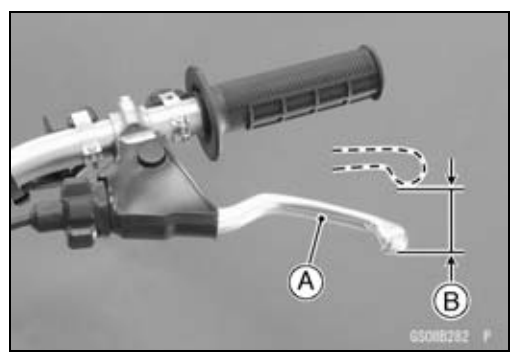

Clutch Lever (Clutch Cable) Free Play Adjustment

- Turn the clutch cable adjuster knob [A] so that the clutch lever will have **8 ~ 13 mm (0.3 ~ 0.5 in.)** of play.

NOTICE
Be sure that the outer cable end at the clutch lever is fully seated in the adjuster at the clutch lever, or it could slip into the place later, creating enough cable play to prevent clutch disengagement.

★If the free play can not be adjusted with the clutch cable adjuster, use the adjusting nut.

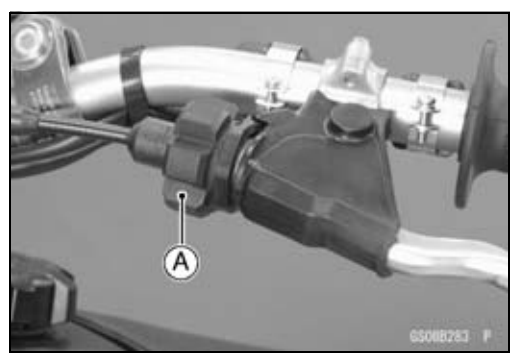

Periodic Maintenance Procedures

- Remove the number plate (see Number Plate Removal in the Frame chapter).
- Slide the dust cover [A].
- Loosen the locknut [B] at the clutch cable, and turn the adjusting nut [C] so that clutch lever has **8 ~ 13 mm (0.3 ~ 0.5 in.)** of play.
- Tighten the locknut, and start the engine and check that the clutch does not slip and that it release properly.

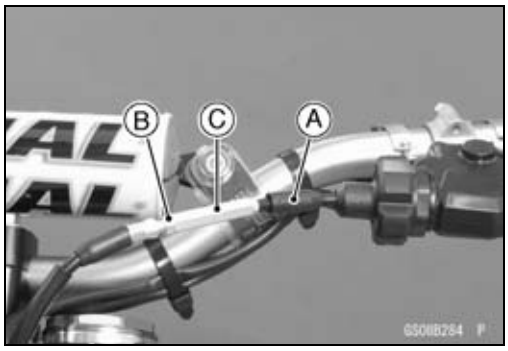

Clutch Plates Inspection

- Remove the clutch plates (see Clutch Removal in the Clutch chapter).
- Visually inspect the friction and steel plates to see if they show signs of seizure, uneven wear or any other damage.

★If any plates show signs of damage, replace the friction plates and steel plates as a set.

- Measure the thickness [A] of the friction and at several points with vernier calipers.

Friction Plate Thickness

Standard:	**2.92 ~ 3.08 mm (0.115 ~ 0.121 in.)**
Service Limit:	**2.7 mm (0.11 in.)**

★If they have worn past the service limit, replace them with new ones.

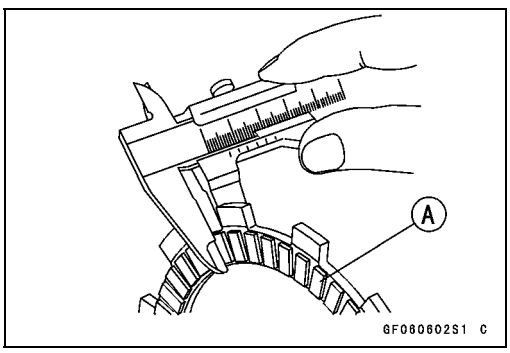

- Place each friction plate or steel plate on a surface plate [A].
- Measure the gap between the surface plate and each friction plate or steel plate [B] with a thickness gauge [C]. The gap is the amount of friction or steel plate warp.

Friction and Steel Plates Warp

Standard:	
Friction Plate	**0.15 mm (0.0059 in.) or less**
Steel Plate	**0.20 mm (0.0079 in.) or less**
Service Limit:	
Friction Plate	**0.3 mm (0.012 in.)**
Steel Plate	**0.3 mm (0.012 in.)**

★If any plate is warped over the service limit, replace it with a new one.

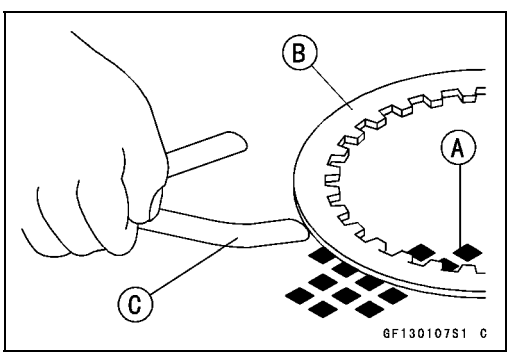

Engine Lubrication System

⚠ WARNING

Vehicle operation with insufficient, deteriorated, or contaminated engine oil will cause accelerated wear and may result in engine seizure, accident, and injury. Check the oil level before each use and change the oil and filter according to the periodic maintenance chart.

Periodic Maintenance Procedures

Engine Oil Change

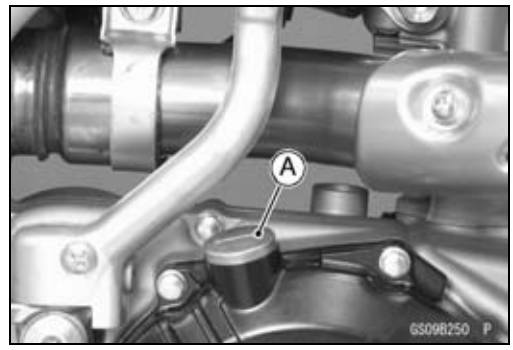

- Warm up the engine thoroughly so that the oil will pick up any sediment and drain easily. Then stop the engine.
- Place an oil pan beneath the engine.
- Remove the oil filler plug [A].

Special Tool - Filler Cap Driver: 57001-1454

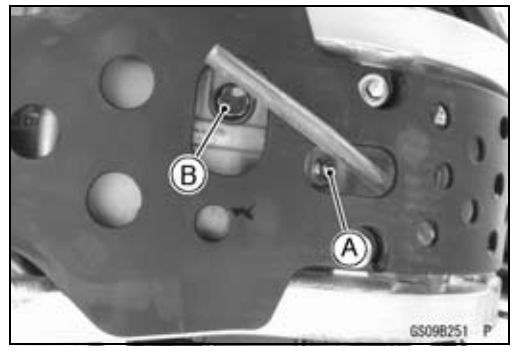

- Remove the engine oil drain bolts from the bottom of the engine, and let the oil drain completely.
  Drain Bolt (M6) [A]
  Drain Bolt (M10) [B]

NOTE

○*Hold the motorcycle upright so that the oil may drain completely.*

- Replace the drain bolt gaskets with new ones.
- Install the drain bolts with the gaskets.
- Tighten:

Torque - Engine Oil Drain Bolt (M10): 20 N·m (2.0 kgf·m, 15 ft·lb)
Engine Oil Drain Bolt (M6): 7.0 N·m (0.71 kgf·m, 62 in·lb)

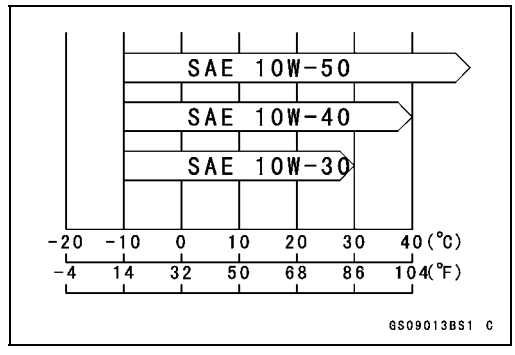

- Pour in the specified type and amount of oil.

Recommended Engine Oil

Type:	**Castrol "POWER1 Racing 4T" 5W-40 or API SG, SH, SJ, SL or SM with JASO MA, MA1 or MA2**
Viscosity:	**SAE 10W-30, 10W-40 or 10W-50**
Capacity:	**0.96 L (1.01 US qt) (when filter is not removed)** **0.98 L (1.04 US qt) (when filter is removed)** **1.20 L (1.27 US qt) (when engine is completely dry)**

NOTE

○*Do not add any chemical additive to the oil. Oils fulfilling the above requirements are fully formulated and provide adequate lubrication for both the engine and the clutch.*
○*The oil viscosity may need to be changed to accommodate atmospheric conditions in your riding area.*

- Check the oil level (see Oil Level Inspection in the Engine Lubrication System chapter).
- Replace the oil filler plug O-ring with a new one.
- Apply grease to the O-ring.
- Tighten:

Special Tool - Filler Cap Driver: 57001-1454

Torque - Oil Filler Plug: 3.5 N·m (0.36 kgf·m, 31 in·lb)

Periodic Maintenance Procedures

Oil Filter Change

- Drain:
  Engine Oil (see Engine Oil Change)
- Remove:
  Oil Filter Cap Bolts [A]
  Oil Filter Cap [B]

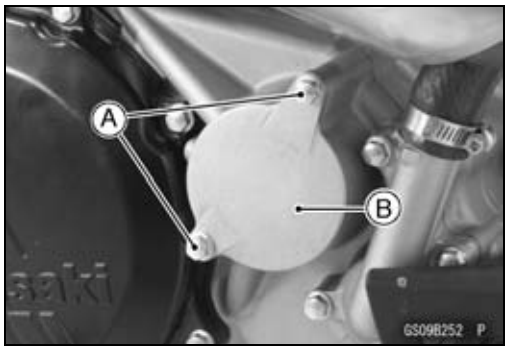

- Remove the oil filter [A].

- Install the spring [A].

- Replace the oil filter with a new one.
- Apply grease to the grommet [A].
- Install the oil filter to the oil filter cap [B] so that grommet faces oil filter cap.

NOTICE
Inside out installation stop oil flow, causing engine seizure.

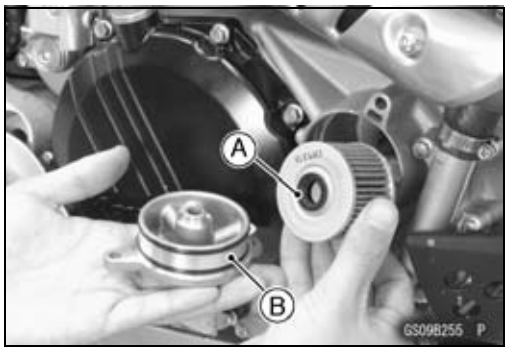

- Replace the oil filter cap O-rings [A] with new ones.
- Apply grease to the O-rings.
- Install:
  Oil Filter Cap [B]
- Tighten:

  Torque - Oil Filter Cap Bolts: 9.8 N·m (1.0 kgf·m, 87 in·lb)
- Pour the specified engine oil (see Engine Oil Change).

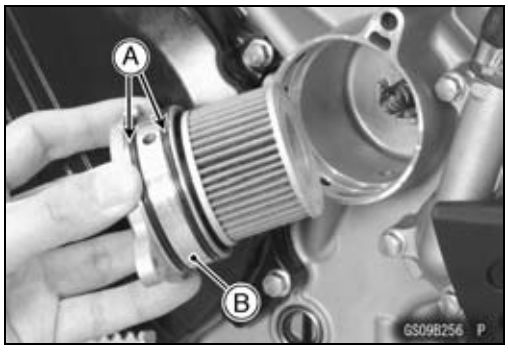

Periodic Maintenance Procedures

Breather Hose Inspection

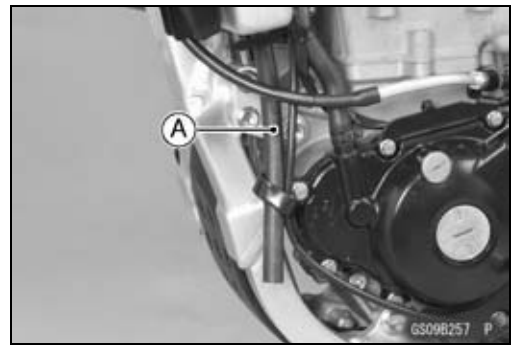

- Be certain that the breather hose [A] are routed without being flattened or kinked and is connected correctly.

★If it is not, correct it.

- Inspect the breather hose for damage or signs of deterioration.

○This hose should not be hard and brittle, nor should be soft swollen.

★Replace it if any damage is noticed.

Crankshaft/Transmission

Crankshaft Inspection

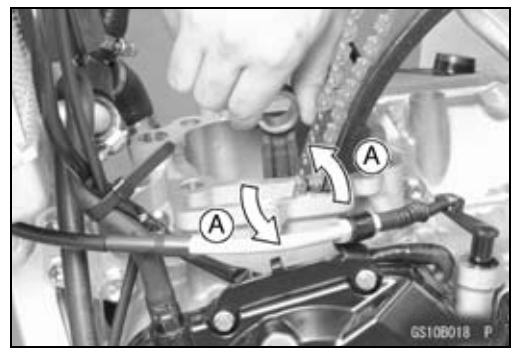

- Remove:
  Cylinder Head (see Cylinder Head Removal in the Engine Top End chapter)
  Cylinder (see Cylinder Removal in the Engine Top End chapter)
  Piston (see Piston Removal in the Engine Top End chapter)
- Make sure that the crankshaft rotate [A] smoothly (in the neutral position).

★If the crankshaft will not turn smoothly, check the connecting rod big end side clearance.

★If the connecting rod big end side clearance is good, check the bearings (see Bearing Inspection in the Crankshaft/Transmission chapter).

Connecting Rod Big End Side Clearance

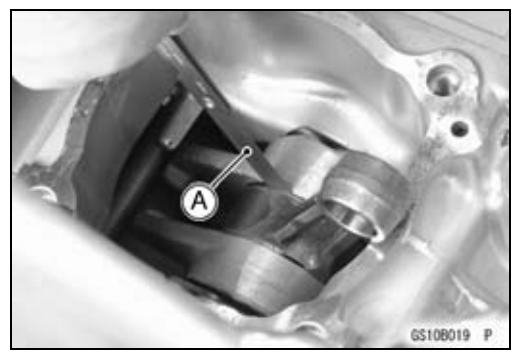

- Measure the connecting rod big end side clearance at right side of big end using a thickness gauge [A].

Connecting Rod Big End Side Clearance

Standard:	**0.25 ~ 0.35 mm (0.0098 ~ 0.0138 in.)**
Service Limit:	**0.6 mm (0.02 in.)**

★If the clearance exceeds the service limit, replace the crankshaft assembly or reassemble the crankshaft.

- Make sure that the crankshaft rotates smoothly after assembling the engine.

Wheels/Tires

Air Pressure Inspection/Adjustment

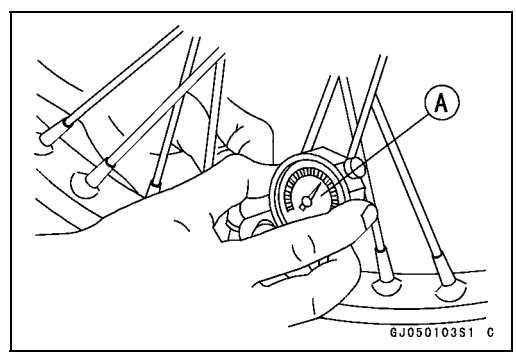

- Using an air pressure gauge [A], measure the air pressure when the tires are cold.
- Adjust the tire air pressure to suit track conditions and rider preference, but do not stray too far from the recommended pressure.

Track Condition	Tire Pressure
When the track is wet, muddy, sandy or slippery, reduce the tire pressure to increase the tire tread surface on the ground.	80 kPa (0.8 kgf/cm², 12 psi) ↑
When the track is pebbly or hard, increase the tire pressure to prevent damage or punctures, through the tires will skid more easily.	↓ 100 kPa (1.0 kgf/cm², 14 psi)

Periodic Maintenance Procedures

Tires Inspection

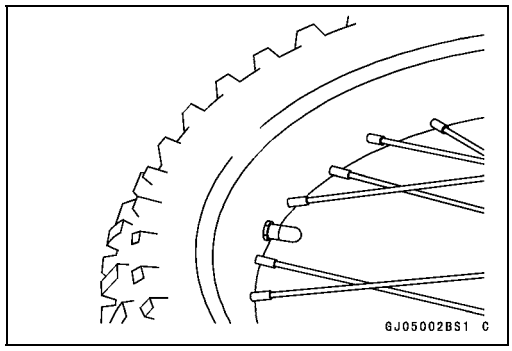

- Remove any imbedded stones or other foreign particles from the tread.

★Repair or replace with a new one if necessary.

- Visually inspect the tire for cracks and cuts.

★Replace the tire, if any damage are noticed.

○Swelling or high spots indicate internal damage, requiring tire replacement.

⚠ WARNING

Some replacement tires may adversely affect handling and cause an accident resulting in serious injury or death. To ensure proper handling and stability, use only the recommended standard tires for replacement, inflated to the standard pressure.

NOTE

○*Check and balance the wheel when a tire is replaced with a new one.*

Standard Tire

Front:

Size	**80/100-21 51M**
Make	**BRIDGESTONE**
Type	**M403, Tube**

Rear:

Size	**120/80-19 63M**
Make	**BRIDGESTONE**
Type	**M404, Tube**

Spoke Tightness Inspection

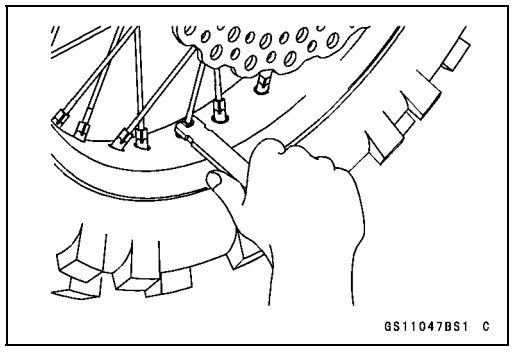

- Check that all the spokes are tightened evenly.

★If spoke tightness is uneven or loose, tighten the spoke nipples evenly.

Torque - Spoke Nipples: 2.2 N·m (0.22 kgf·m, 19 in·lb)

- Check the rim runout (see Rim Runout Inspection).

⚠ WARNING

A missing spoke places an additional load on the other spokes, which will eventually cause other spokes to break, creating the potential for an accident resulting in serious injury or death. Immediately replace any broken spoke(s).

Rim Runout Inspection

- Place the jack under the frame so that the front/rear wheel off the ground.

Special Tools - Jack: 57001-1238
Jack Attachment: 57001-1608

- Inspect the rim for cracks, dents, bending, or warping.

★If there is any damage to the rim, it must be replaced.

Periodic Maintenance Procedures

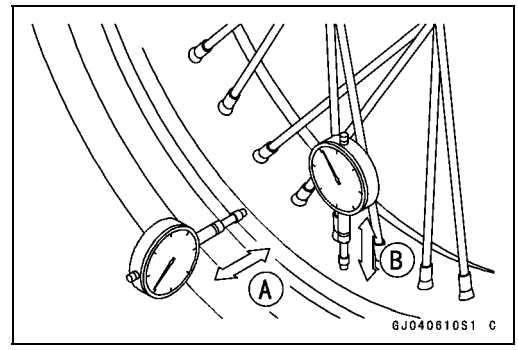

- Set a dial gauge against the side of the rim, and rotate the rim to measure the axial runout [A].

○The difference between the highest and lowest dial readings is the amount of runout.

- Set a dial gauge against the outer circumference of the rim, and rotate the rim to measure radial runout [B].

Rim Runout (with tire installed)

Standard:

Axial	**TIR 1.0 mm (0.04 in.) or less**
Radial	**TIR 1.0 mm (0.04 in.) or less**

Service Limit:

Axial	**TIR 2.0 mm (0.08 in.)**
Radial	**TIR 2.0 mm (0.08 in.)**

★If rim runout exceeds the service limit, check the wheel bearings first.

★If the problem is not due to the bearings, loosen some spokes and tighten others within the standard torque.

Wheel Bearing Inspection

- Raise the front/rear wheel off the ground using the jack.

Special Tools - Jack: 57001-1238
Jack Attachment: 57001-1608

- Rotate [A] the wheel lightly, and check for roughness, binding or noise.

★If any damage is found, replace the hub bearing.

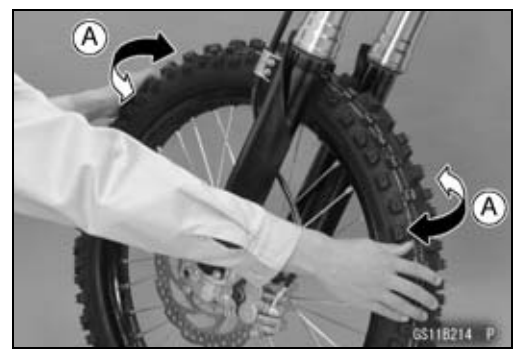

- Turn the handlebar until the handlebar does not move to either side (front wheel).
- The wheel edge is moved [A] to one direction gripping the edge of the wheel by both hands and the play of the wheel bearing is checked.

★If the play is found, replace the bearing.

Final Drive

Drive Chain Wear Inspection

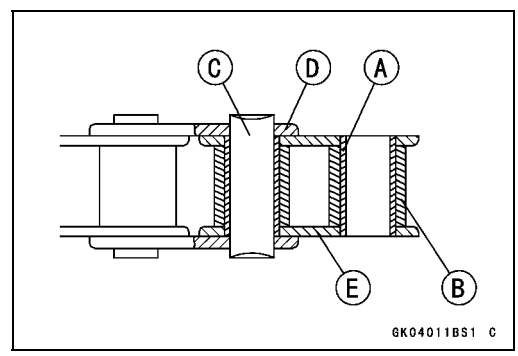

- Rotate the rear wheel to inspect the drive chain for damaged rollers, and loose pins and links.

★If there is any irregularity, replace the drive chain.

★Lubricate the drive chain if it appears dry.

Bushing [A]
Roller [B]
Pin [C]
Pin Link [D]
Roller Link [E]

Periodic Maintenance Procedures

- Stretch the chain taut by hanging a 98 N (10 kg, 20 lb) weight [A] on the chain.
- Measure the length of 20 links [B] on the straight part [C] of the chain from the pin center of the 1st pin to the pin center of the 21st pin. Since the chain may wear unevenly, take measurements at several places.

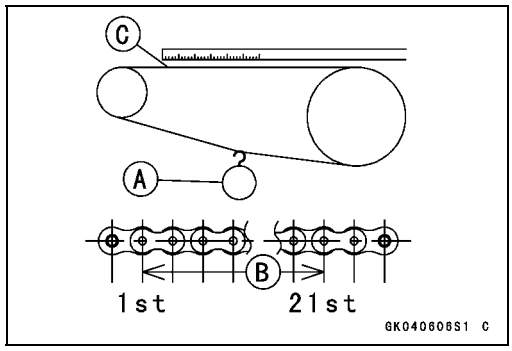

Chain 20-link Length

Standard: 317.5 ~ 318.2 mm (12.50 ~ 12.53 in.)

Service Limit: 323 mm (12.7 in.)

★If any measurements exceed the service limit, replace the chain. Also, replace the front and rear sprockets when the drive chain is replaced.

⚠ WARNING

A chain that breaks or jumps off the sprockets could snag on the engine sprocket or lock the rear wheel, severely damaging the motorcycle and causing it to go out of control. Inspect the chain for damage and proper adjustment before each ride. If chain wear exceeds the service limit, replace it with the standard chain.

Standard Chain

Make: DAIDO

Type: DID 520DMA4

Link: 114 Links

Drive Chain Slack Inspection

- Using the jack, raise the rear wheel until the rear shock absorber stretched fully.

Special Tools - Jack: 57001-1238
Jack Attachment: 57001-1608

- Check the wheel alignment (see Wheel Alignment Inspection in the Final Drive chapter), and adjust it if necessary (see Wheel Alignment Adjustment in the Final Drive chapter).

NOTE

○*Clean the drive chain if it is dirty, and lubricate it if it appears dry.*

- Rotate the rear wheel to find the position where the chain is tightest (because it wears unevenly).
- Measure the space (chain slack) [A] between the bottom of the chain and the rear of the chain slipper as shown in the figure.

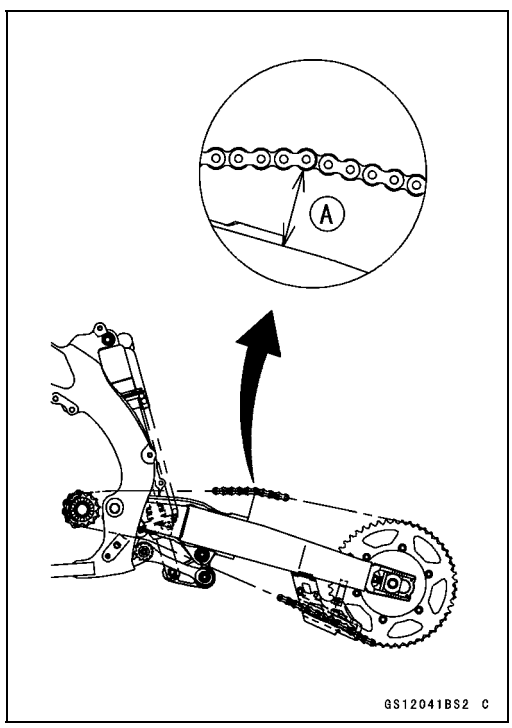

Chain Slack

Standard: 52 ~ 58 mm (2.0 ~ 2.3 in.)

★If the drive chain slack exceeds the standard, adjust it.

Periodic Maintenance Procedures

Drive Chain Slack Adjustment

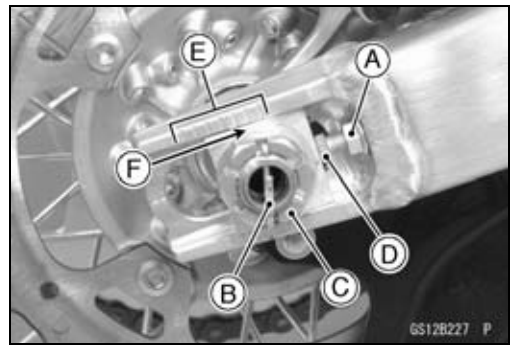

- Loosen the left and right chain adjuster locknuts [A].
- Remove the cotter pin [B] and loosen the rear axle nut [C].

★If the chain is too tight, back out the left and right chain adjusting bolts [D] evenly, and push the wheel forward until the chain is too loose.

★If the chain is too loose, turn both chain adjusting bolts evenly until the drive chain has the correct amount of slack. To keep the chain and wheel properly aligned, the notch on the left chain adjuster should align with the same swingarm mark [E] as the right chain adjuster notch [F].

- Check the wheel alignment (see Wheel Alignment Inspection in the Final Drive chapter).

⚠ WARNING

Misalignment of the wheel will result in abnormal wear and may result in an unsafe riding condition. Be sure the wheel is properly aligned.

- Tighten both chain adjuster locknuts securely.
- Tighten:

Torque - Rear Axle Nut: 108 N·m (11.0 kgf·m, 79.7 ft·lb)

- Rotate the wheel, measure the chain slack again at the tightest position, and readjust if necessary.

- Insert a new cotter pin [A].

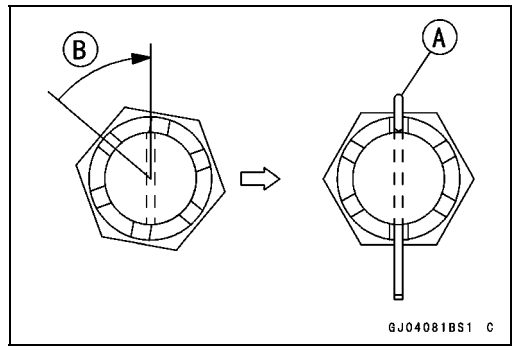

NOTE

○*When inserting the cotter pin, if the slots in the nut do not align with the cotter pin hole in the axle, tighten the nut clockwise [B] up to next alignment.*

○*It should be within 30 degrees.*

○*Loosen once and tighten again when the slot goes past the nearest hole.*

- Bend the cotter pin [A] over the nut.

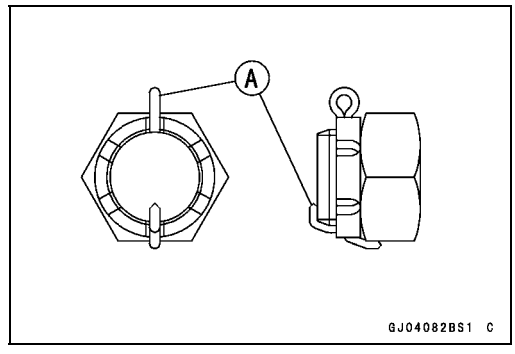

⚠ WARNING

A loose axle nut can lead to an accident resulting in serious injury or death. Tighten the axle nut to the proper torque and install a new cotter pin.

- Check the rear brake effectiveness.

NOTE

○*In wet and muddy conditions, mud sticks to the chain and sprockets resulting in an overly tight chain, and the chain may break. To prevent this, adjust the chain to 58 ~ 68 mm (2.3 ~ 2.7 in.) of slack whenever necessary.*

Periodic Maintenance Procedures

Drive Chain Lubrication

○The chain should be lubricated with a lubricant which will both prevent the exterior from rusting and also absorb shock and reduce friction in the interior of the chain.

★If the chain is especially dirty, it should be washed in diesel oil or kerosene, and afterward soaked in a heavy oil. Shake the chain while it is in the oil so that oil will penetrate into the inside of each roller.

● An effective, good quality lubricant specially formulated for chains is best for regular chain lubrication.

● If a special lubricant is not available, a heavy oil such as SAE90 is preferred to a lighter oil because it will stay on the chain longer and provide better lubrication.

● Apply oil to the sides of the rollers so that oil will penetrate into the rollers and bushings.

● Wipe off any excess oil.

Oil Applied Area [A]

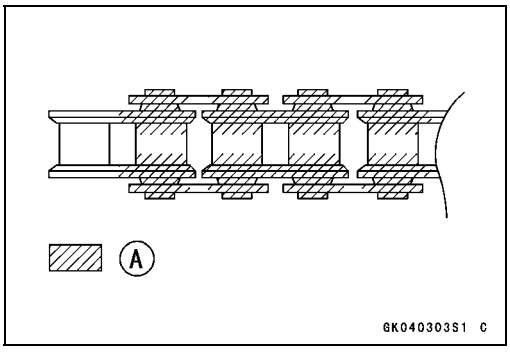

Sprocket Wear Inspection

● Visually inspect the front and rear sprocket teeth for wear and damage.

★If they are worn as illustrated or damaged, replace the sprocket, and inspect the drive chain wear.

Worn Tooth (Engine Sprocket) [A]
Worn Tooth (Rear Sprocket) [B]
Direction of Rotation [C]

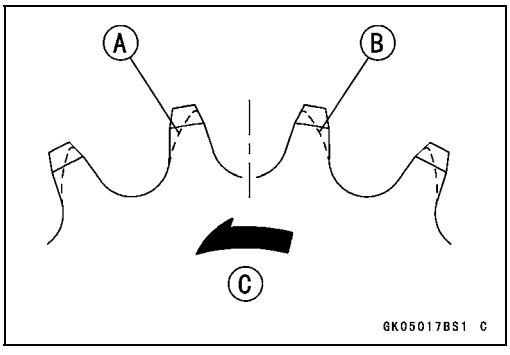

NOTE

○*If a sprocket requires replacement, the chain is probably worn also. When replacing a sprocket, inspect the chain.*

Rear Sprocket Warp (Runout) Inspection

● Using the jack, raise the rear wheel off the ground.

Special Tools - Jack: 57001-1238
Jack Attachment: 57001-1608

● Set a dial gauge [A] against the rear sprocket [B] near the teeth as shown in the figure.

● Rotate [C] the rear wheel slowly to measure the sprocket warp (runout).

○The difference between the highest and lowest dial gauge readings is the amount of warp (runout).

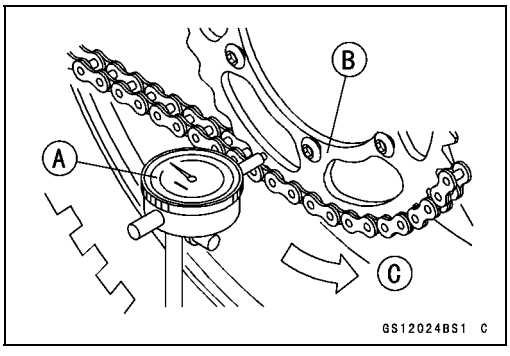

Rear Sprocket Warp (Runout)

Standard:	**TIR 0.4 mm (0.016 in.) or less**
Service Limit:	**TIR 0.5 mm (0.020 in.)**

★If the runout exceeds the service limit, replace the rear sprocket.

Periodic Maintenance Procedures

Brakes

Brake Lever and Pedal Adjustment

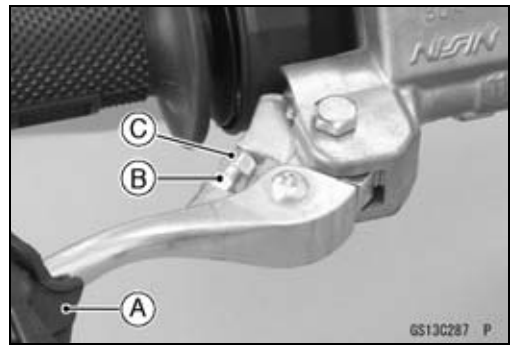

- Slide the dust cover [A].
- Adjust the brake lever to suit you.

○Loosen the adjuster locknut [B] and turn the adjuster [C] to either side.

- After adjustment, tighten the locknut.

⚠ WARNING

An improperly adjusted brake could drag and cause the brake to overheat, damaging the brake assembly and possbily locking the rear wheel, resulting in loss of control. Always maintain the proper brake adjustment.

NOTE

○*Usually it is not necessary to adjust the pedal position, but always adjust it when the master cylinder is disassembled or pedal position is incorrect.*

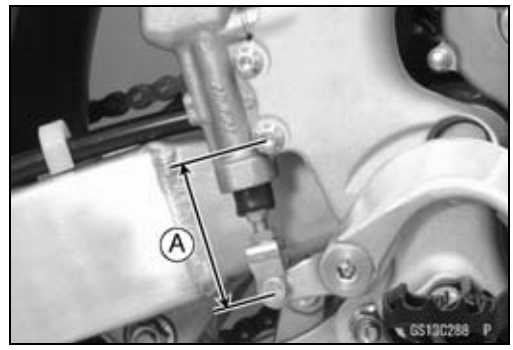

- Measure the length [A] indicated in the figure.

Rear Master Cylinder Push Rod Length
Standard: 68.5 ±1 mm (2.70 ±0.04 in.)

★If it is not within the standard, adjust the push rod in the master cylinder as follows.

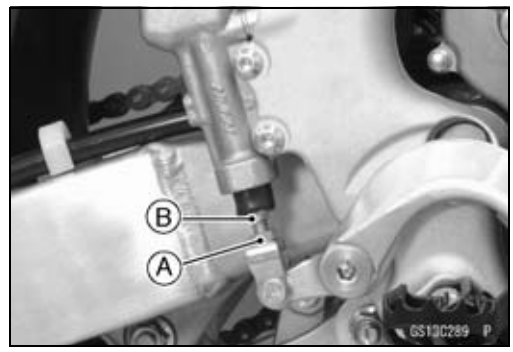

○Loosen the push rod locknut [A].
○Turn the adjusting bolt [B] to obtain the specified length.
○Tighten the locknut.

Torque - Rear Master Cylinder Push Rod Locknut: 17 N·m (1.7 kgf·m, 13 ft·lb)

Brake Fluid Level Inspection

- Check the brake fluid level in the front or rear brake reservoir [A] and the front or rear reservoir must be kept above the lower level line [B].

NOTE

○*Hold the reservoir horizontal when checking brake fluid level.*

★If the fluid level in front or rear reservoir is lower than the lower level line, fill the reservoir to the upper level line.

- Inside the reservoir is stopped end showing the upper level line [C].

⚠ WARNING

Mixing brands and types of brake fluid can reduce the brake system's effectiveness and cause an accident resulting in injury or death. Do not mix two brands of brake fluid. Change the brake fluid in the brake line completely if the brake fluid must be refilled but the type and brand of the brake fluid that is already in the reservoir are unidentified.

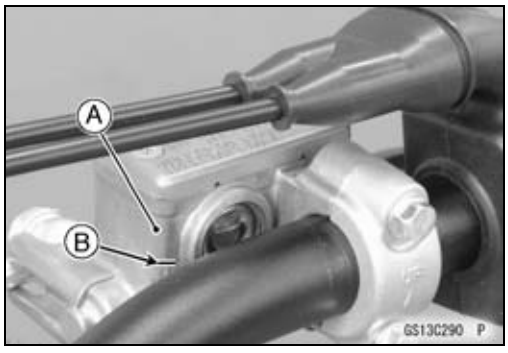

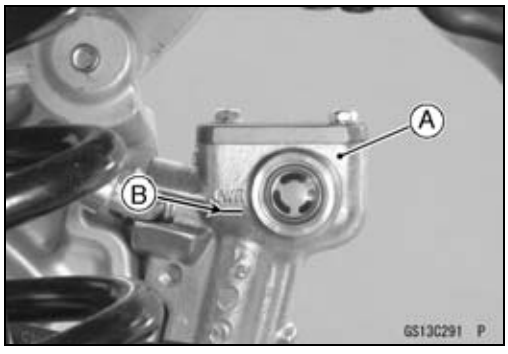

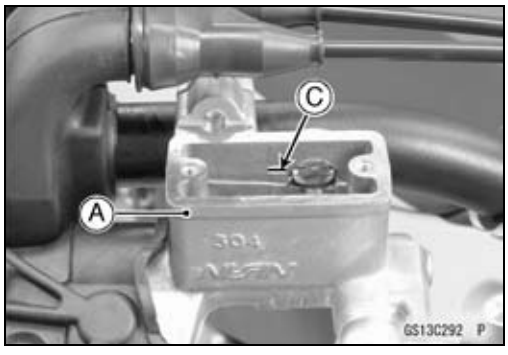

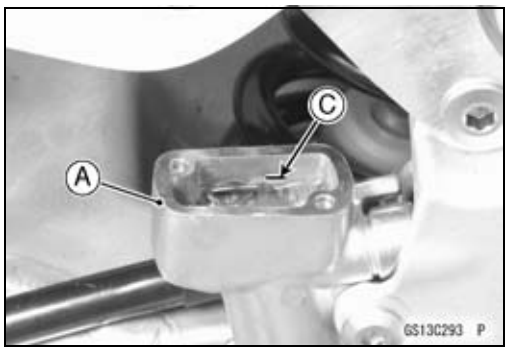

Periodic Maintenance Procedures

Brake Fluid Change

⚠ WARNING

When working with the disc brake, observe the precautions listed below.

1. **Never reuse old brake fluid.**
2. **Do not use fluid from a container that has been left unsealed or that has been open for a long time.**
3. **Do not mix two types and brands of fluid for use in the brake. This lowers the brake fluid boiling point and could cause the brake to be ineffective. It may also cause the rubber brake parts to deteriorate.**
4. **Don't leave the reservoir cap off for any length of time to avoid moisture contamination of the fluid.**
5. **Don't change the fluid in the rain or when a strong wind is blowing.**
6. **Except for the disc pads and disc, use only disc brake fluid, isopropyl alcohol, or ethyl alcohol for cleaning of the brake parts. Do not use any other fluid for cleaning these parts. Gasoline, engine oil, or any other petroleum distillate will cause deterioration of the rubber parts. Oil spilled on any part will be difficult to wash off completely and will eventually deteriorate the rubber used in the disc brake.**
7. **When handling the disc pads or disc, be careful that no disc brake fluid or any oil gets on them. Clean off any fluid or oil that inadvertently gets on the pads or disc with a high-flash point solvent. Do not use one which will leave an oily residue. Replace the pads with new ones if they cannot be cleaned satisfactorily.**
8. **Brake fluid quickly ruins painted surfaces; any spilled fluid should be completely wiped up immediately.**
9. **If any of the brake line fittings or the bleed valve is opened at any time, the AIR MUST BE BLED FROM THE BRAKE LINE.**

Recommended Disc Brake Fluid

Type:

Front and Rear	**DOT3 or DOT4**

NOTE

○*The procedure to change the front brake fluid is as follows. Changing the rear brake fluid is the same as for the front brake.*

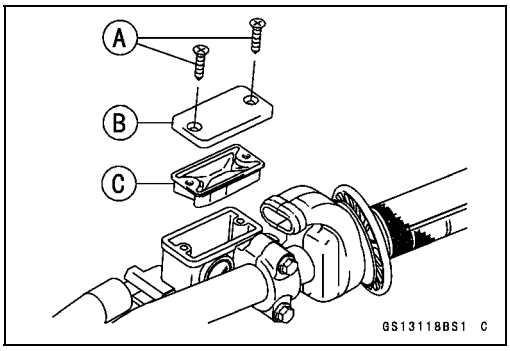

- Level the brake fluid reservoir.
- Remove:
  Screws [A]
  Reservoir Cap [B]
  Diaphragm [C]

- Remove the rubber cap [A] from the bleed valve [B] on the caliper [C].

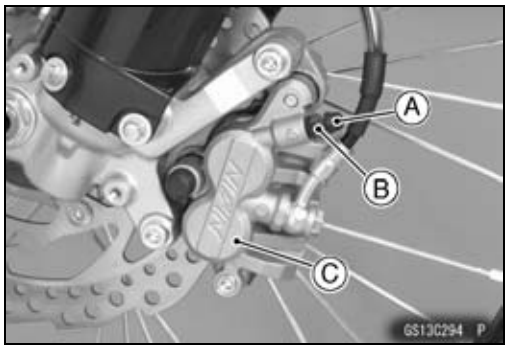

- Attach a clear plastic hose [A] to the bleed valve, and run the other end of the hose into a container.
- Fill the reservoir with fresh specified brake fluid.

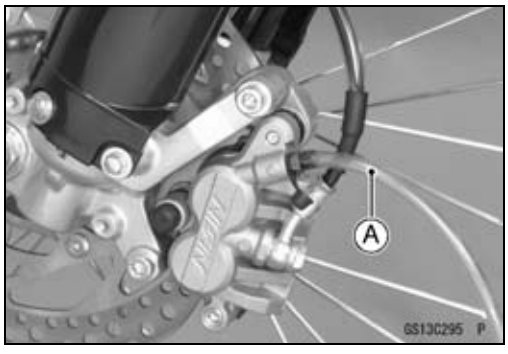

- Change the brake fluid as follows:

○Repeat this operation until fresh brake fluid comes out from the plastic hose or the color of the fluid changes.

1. Open the bleed valve [A].
2. Apply the brake and hold it [B].
3. Close the bleed valve [C].
4. Release the brake [D].

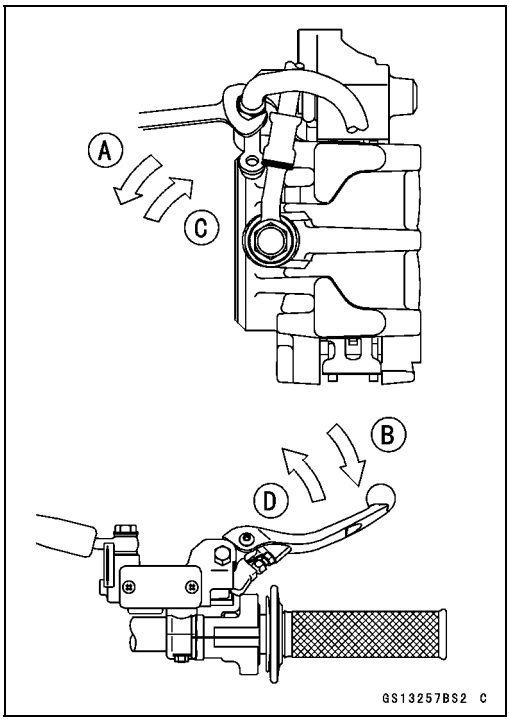

⚠ WARNING

Mixing brands and types of brake fluid can reduce the brake system's effectiveness and cause an accident resulting in injury or death. Do not mix two brands of brake fluid. Change the brake fluid in the brake line completely if the brake fluid must be refilled but the type and brand of the brake fluid that is already in the reservoir are unidentified.

NOTE

○*The fluid level must be checked often during the changing operation and replenished with fresh brake fluid. If the fluid in the reservoir runs out any time during the changing operation, the brakes will need to be bled since air will have entered the brake line.*

Periodic Maintenance Procedures

- Remove the clear plastic hose.
- Install the diaphragm and reservoir cap.
- Tighten:

Torque - Front Brake Reservoir Cap Screws: 1.5 N·m (0.15 kgf·m, 13 in·lb)

- Tighten the bleed valve, and install the rubber cap.

Torque - Caliper Bleed Valve: 7.8 N·m (0.80 kgf·m, 69 in·lb)

- After changing the fluid, check the brake for good braking power, no brake drag, and no fluid leakage.

★If necessary, bleed the air from the lines (see Brake Line Bleeding in the Brakes chapter).

Brake Pad Wear Inspection

- Remove:
  Front Brake Caliper (see Caliper Removal in the Brakes chapter)
- Check the lining thickness and condition of the brake pads in each caliper.

NOTE

○*It is able to check with the pads installed.*

★If either pad is damaged, replace both pads in the caliper as a set.

Brake Pad Lining Thickness

Standard:	
Front	**4.0 mm (0.16 in.)**
Rear	**6.4 mm (0.25 in.)**
Service Limit:	
Front	**1 mm (0.04 in.)**
Rear	**1 mm (0.04 in.)**

★If the lining thickness [A] of either pad is less than the service limit [B], replace both pads in the caliper as a set.
Front Pad [C]
Rear Pad [D]

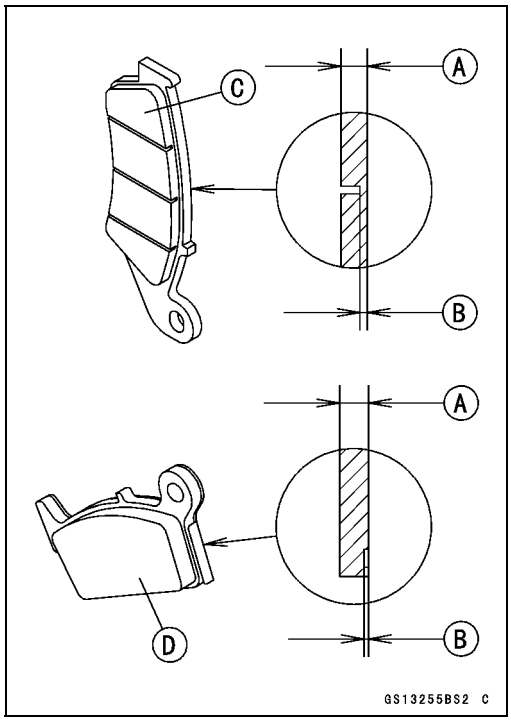

Brake Master Cylinder Cup and Dust Cover Replacement

Front Master Cylinder Disassembly

- Remove the front master cylinder (see Front Master Cylinder Removal in the Brakes chapter).
- Remove the reservoir cap and diaphragm, and pour the brake fluid into a container.
- Remove the locknut and pivot bolt, and remove the brake lever.

Periodic Maintenance Procedures

KX450FC

- Pull the dust cover [A] out of place, and remove the circlip [B].

  Special Tool - Inside Circlip Pliers: 57001-143

- Remove the washer [C].
- Remove the piston assy [D] (include primary and secondary cups).

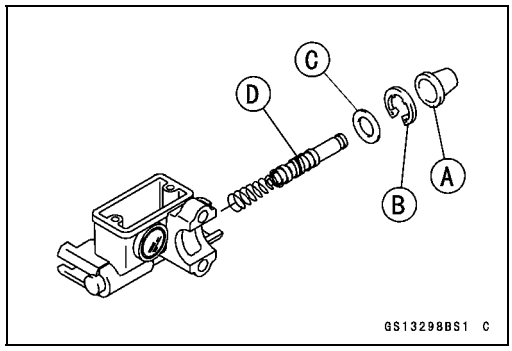

KX450FD ~

- Pull the push rod [A] and dust cover [B] out of place, and remove the circlip [C].

  Special Tool - Inside Circlip Pliers: 57001-143

- Remove the washer [D].
- Remove the piston assy [E] (include primary and secondary cups).

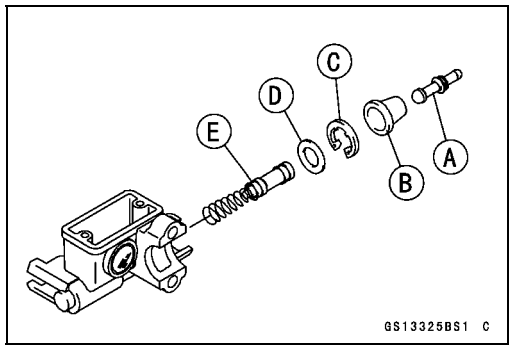

Rear Master Cylinder Disassembly

- Remove the rear master cylinder (see Rear Master Cylinder Removal in the Brakes chapter).

NOTE

○*Do not remove the push rod clevis since removal requires brake pedal position adjustment.*

- Remove the reservoir cap and diaphragm, and pour the brake fluid into a container.
- Slide the dust cover [A] on the push rod [B] out of place, and remove the circlip [C].

  Special Tool - Inside Circlip Pliers: 57001-143

- Pull out the push rod.
- Remove the piston assy [D] (include primary and secondary cups).

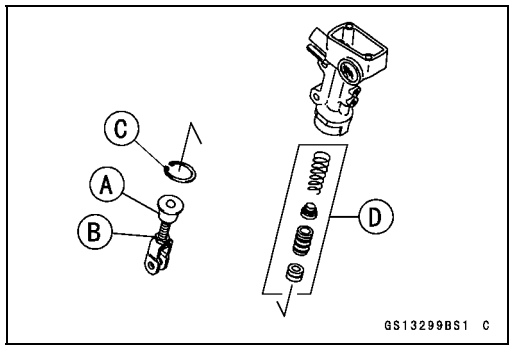

Assembly

- Before assembly, clean all parts including the master cylinder with brake fluid or alcohol.

NOTICE

Except for the disc pads and disc, use only disc brake fluid, isopropyl alcohol, or ethyl alcohol for cleaning of the brake parts. Do not use any other fluid for cleaning of these parts. Gasoline, engine oil, or any other petroleum distillate will cause deterioration of the rubber parts. Oil spilled on any part will be difficult to wash off completely, and will eventually deteriorate the rubber used in the disc brake.

Periodic Maintenance Procedures

- Apply brake fluid to the removed parts and to the inner wall of the cylinder.
- Take care not to scratch the piston assy and the inner wall of the cylinder.
- Apply silicone grease (ex. PBC grease) to the following parts.
  Brake Lever Pivot Bolt (Front)
  Brake Lever Contact (Front)
  Push Rod Contact (Other than KX450FC Front)
  Dust Covers
- Tighten:

Torque - Brake Lever Pivot Bolt: 5.9 N·m (0.60 kgf·m, 52 in·lb)
Brake Lever Pivot Bolt Locknut: 5.9 N·m (0.60 kgf·m, 52 in·lb)

Brake Caliper Fluid Seal and Dust Seal Replacement

Front Caliper Disassembly

- Remove:
  Front Caliper (see Caliper Removal in the Brakes chapter)
  Brake Pads (see Brake Pad Removal in the Brakes chapter)

- Separate the caliper holder [A] from the caliper [B].
- Remove the anti-rattle springs [C].

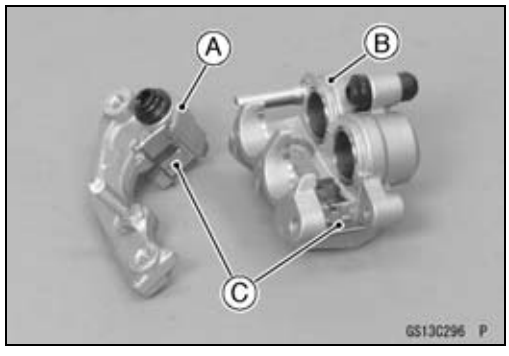

- Using compressed air, remove the pistons. One way to remove the pistons is as follows.
  ○Cover the caliper opening with a clean heavy cloth [A].
  ○Remove the pistons by lightly applying compressed air [B] to the hose joint opening.

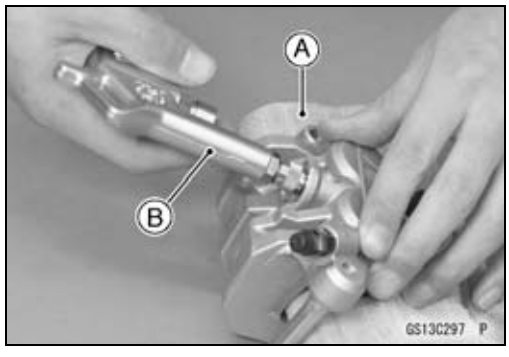

⚠ WARNING

The piston in the brake caliper can crush hands and fingers. Never place your hand or fingers in front of the piston.

- Pull out the pistons [A] by hand.
- Remove the dust seal [B] and fluid seal [C] on each cylinder.

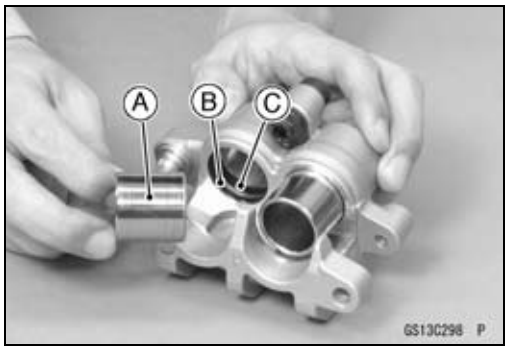

NOTE

○*If compressed air is not available, with the brake hose connected to the caliper.*
○*Prepare a container for brake fluid, and perform the work above it.*
○*Remove the spring and pads (see Brake Pad Removal in the Brakes chapter).*
○*Pump the brake lever until the pistons come out of the cylinders.*

Rear Caliper Disassembly

- Remove:
  Rear Caliper (see Caliper Removal in the Brakes chapter)
  Brake Pads (see Brake Pad Removal in the Brakes chapter)

- Separate the caliper holder [A] from the caliper [B].
- Remove the anti-rattle springs [C].

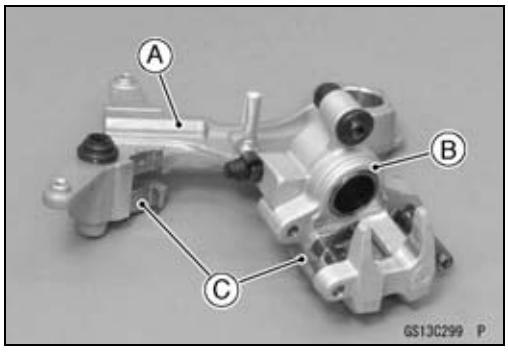

- Using compressed air, remove the piston.
○Cover the caliper opening with a clean heavy cloth [A].
○Remove the piston by lightly applying compressed air [B] to the hose joint opening.

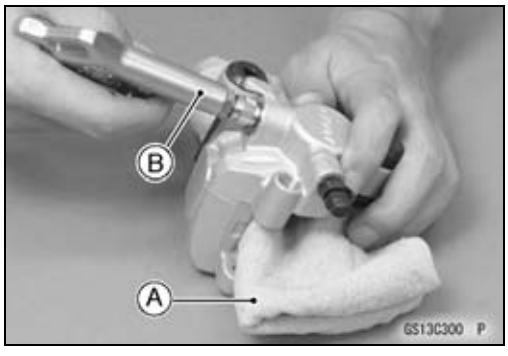

⚠ WARNING

The piston in the brake caliper can crush hands and fingers. Never place your hand or fingers in front of the piston.

- Pull out the piston [A] by hand.
- Remove the dust seal [B] and fluid seal [C].

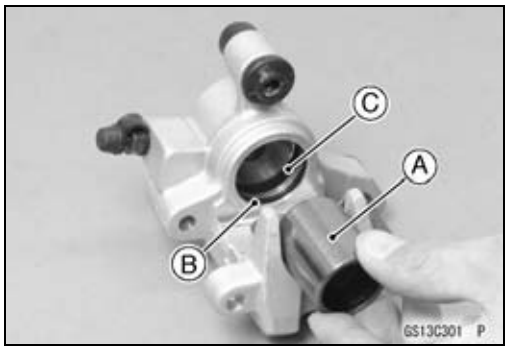

Periodic Maintenance Procedures

Caliper Assembly

● Clean the caliper parts except for the pads.

NOTICE
For cleaning of the parts, use only disc brake fluid, isopropyl alcohol, or ethyl alcohol.

★If you removed the bleed valve, install the bleed valve and rubber cap.

Torque - Caliper Bleed Valve: 7.8 N·m (0.80 kgf·m, 69 in·lb)

● Replace the fluid seal(s) [A] with new ones.
○Apply silicone grease to the fluid seal(s), and install them into the cylinder(s) by hand.
● Replace the dust seal(s) [B] with new ones.
○Apply brake fluid to the dust seal(s), and install them into the cylinder(s) by hand.
● Apply brake fluid to the outside of the piston(s) [C], and push them into each cylinder by hand.

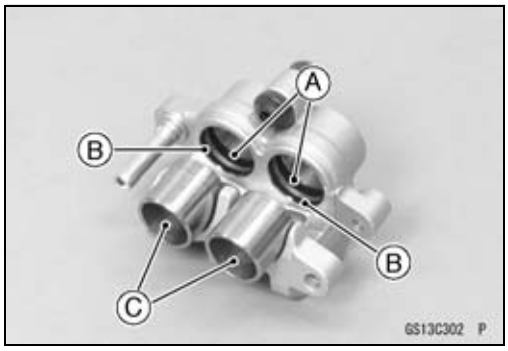

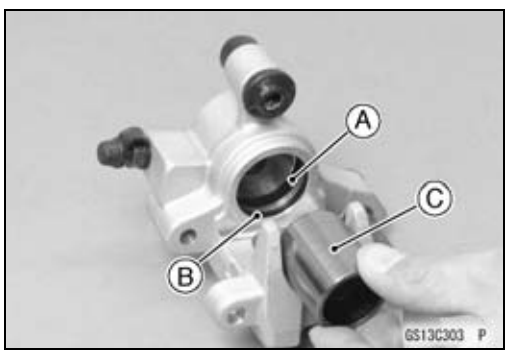

● Install the anti-rattle springs [A] as shown in the figure.

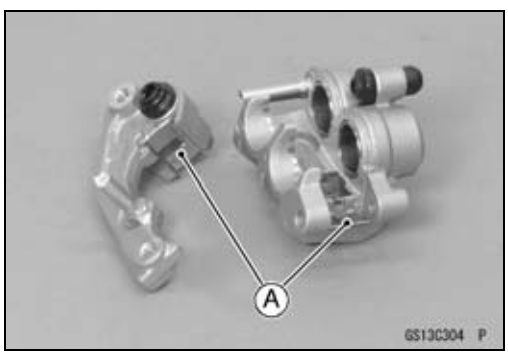

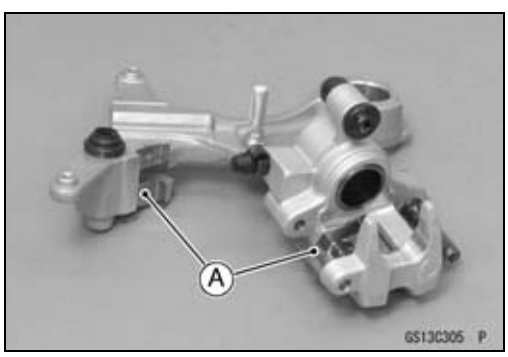

- Replace the friction boot [A] and dust boot [B] if they are damaged.
- Apply a thin coat of PBC (Poly Butyl Cuprysil) grease to the caliper holder shafts [C] and holder holes (PBC is a special high-temperature, water-resistance grease).
- Assemble the caliper and caliper holder.

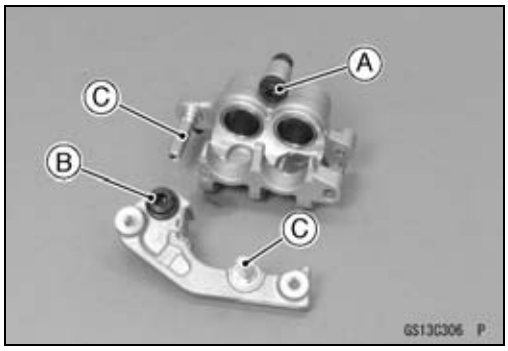

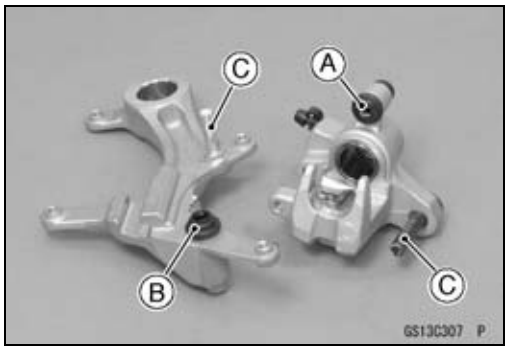

- Install the brake pads (see Brake Pad Installation in the Brakes chapter).
- Install the calipers (see Caliper Installation in the Brakes chapter).
- Wipe up any spilled brake fluid on the caliper with wet cloth.

Brake Hoses and Connections Inspection

- Inspect the brake hose and fittings for deterioration, cracks and signs of leakage.

○The high pressure inside the brake line can cause fluid to leak [A] or the hose to burst if the line is not properly maintained. Bend and twist the rubber hose while examining it.

★Replace the hose if any cracks [B] or bulges [C] are noticed.

★Tighten any loose fittings.

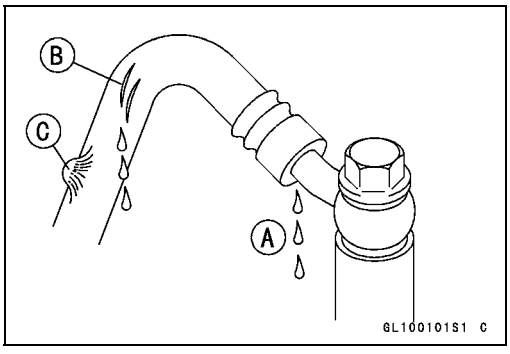

Brake Hose Replacement

NOTICE
Brake fluid quickly ruins painted surfaces; any spilled fluid should be completely washed away immediately.

Periodic Maintenance Procedures

Front Brake Hose

● Remove:
Brake Hose Clamp Bolts [A]
Brake Hose Clamps [B]

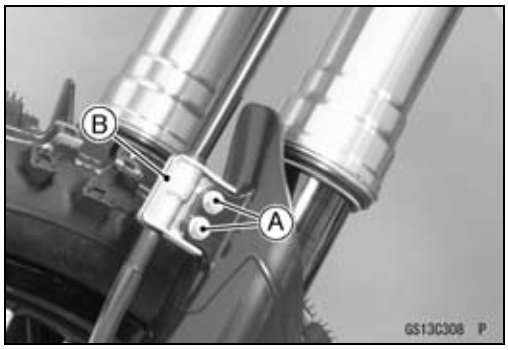

Rear Brake Hose

● Remove:
Brake Hose Clamps [A]

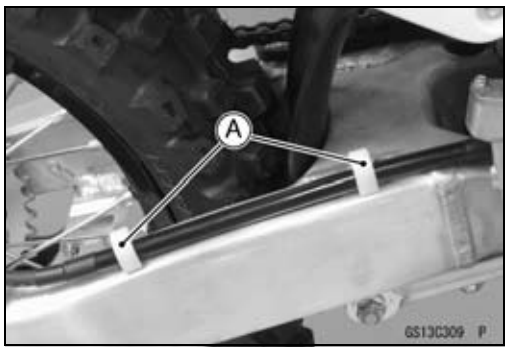

● Remove:
Bolts [A]
Rear Caliper Guard [B]

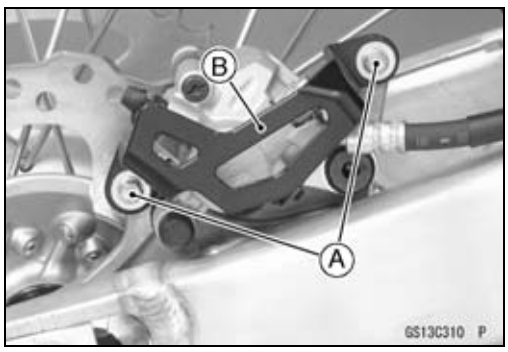

● Remove:
Rear Master Cylinder Mounting Bolts [A]

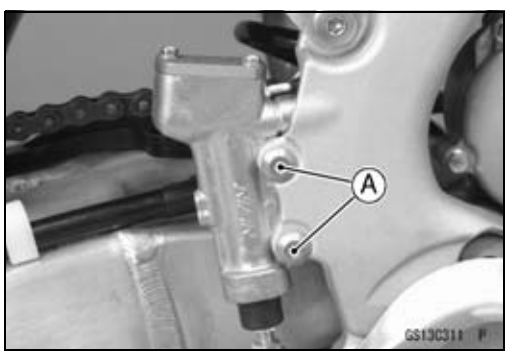

● Remove the front/rear brake hose banjo bolts [A] and washers [B].
● Replace the washers with new ones.
○When removing the brake hose, take care not to spill the brake fluid on the painted or plastic parts.
○When removing the brake hose, temporarily secure the end of the brake hose to some high place to keep fluid loss to a minimum.

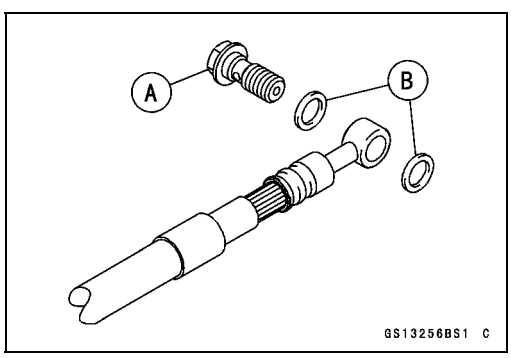

- When installing the hoses, avoid sharp bending, kinking, flattening or twisting, and run the hoses according to Cable, Wire, and Hose Routing section in the Appendix chapter.
- Tighten:

Torque - Brake Hose Banjo Bolts: 25 N·m (2.5 kgf·m, 18 ft·lb)

- Install the removed parts (see appropriate chapters).
- Bleed the brake line after installing the brake hose (see Brake Line Bleeding in the Brakes chapter).

Suspension

Front Fork Inspection

- Visually inspect the front fork for oil leakage, scoring or scratches on the outer surface of the inner tubes [A].
- Holding the brake lever, pump the front fork down and up manually to check for smooth operation.

★If the fork shown damages or oil leak, replace the damaged parts.

★If the fork rattles, inspect the oil level or tightening torque.

NOTICE
If the inner tube is badly bent or creased, replace it. Excessive bending, followed by subsequent straightening, can weaken the inner tube.

Front Fork Oil Change (each fork leg)

KX450FC

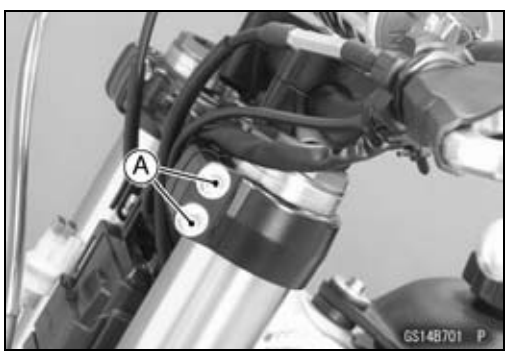

- Remove:
  Number Plate (see Number Plate Removal in the Frame chapter)
- Loosen the front fork clamp bolts (upper) [A].

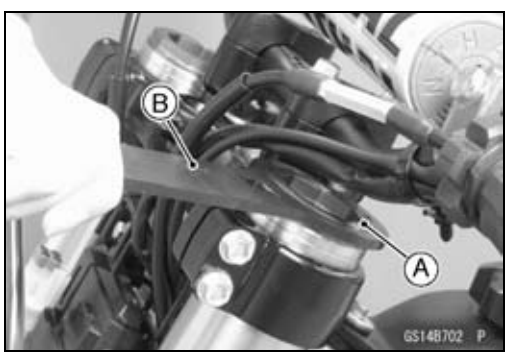

- Turn the handlebar to one side, and loosen the fork top plug [A].

Special Tool - Top Plug Wrench, 49 mm [B]: 57001-1653

- Remove:
  Front Fork (see Front Fork Removal in the Suspension chapter)

Periodic Maintenance Procedures

NOTE

○*Set rebound and compression damping setting to the softest settings before disassembling to prevent the needle of adjusters from damaging. Record the setting before turning the adjuster.*

- Thoroughly clean the fork before disassembly.

NOTICE
Be careful not scratch the inner tube and not to damage the dust seal. **Avoid scratching or damaging the inner tube or the dust seal. Use a mild detergent and sponge out dirt with plenty of water.**

- Using the top plug wrench [A], remove the fork top plug [B] from the outer tube [C] and slowly slide down the outer tube.

  Special Tool - Top Plug Wrench, 49 mm: 57001-1653

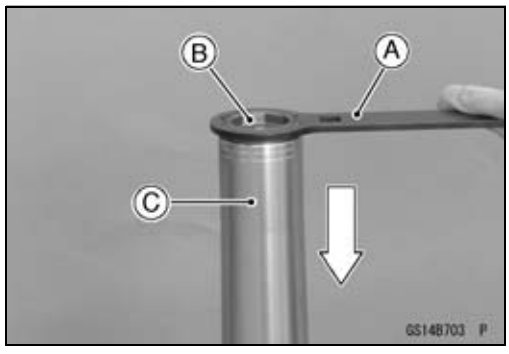

- Place an oil pan under the front fork and drain the fork oil [A].

NOTE

○*Pump the fork tube several times to discharge the fork oil.*

- Raise the outer tube and temporarily install the fork top plug [A] to the outer tube [B] with the top plug wrench [C].

  Special Tool - Top Plug Wrench, 49 mm: 57001-1653

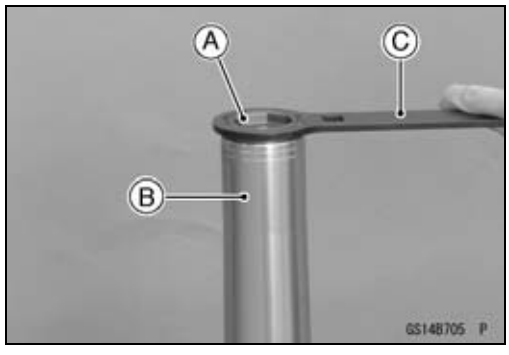

Periodic Maintenance Procedures

- Hold the axle holder [A] with a vise.

○Protect the axle holder with a soft jaw or heavy cloth when using a vise.

- Loosen the adjuster assembly [B] completely.

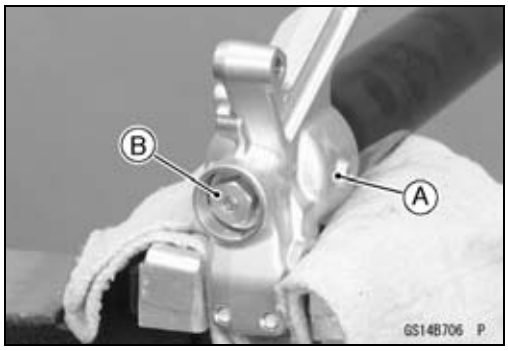

⚠ WARNING

Clamping the axle holder too tight can damage it which will affect riding stability.
Do not clamp the axle holder too tight.

- Compress the outer tube by hands and install the top plug wrench [A] between the axle holder bottom [B] and locknut [C].

Special Tool - Top Plug Wrench, 49 mm: 57001-1653

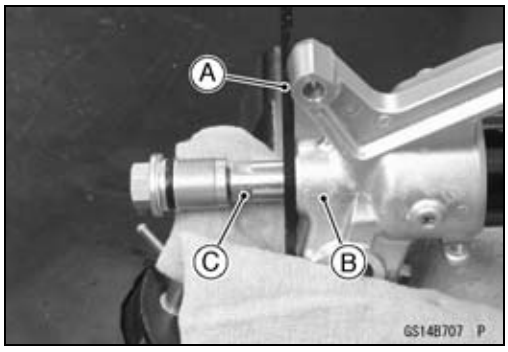

⚠ WARNING

The fork spring applies pressure to the adjuster assembly and can eject the special tool with substantial force if the tool is not properly and securely placed. Be sure the tool is fully in place as shown in the photo, and keep fingers away to avoid getting them pinched between the tool, adjuster assembly and axle holder.

- Hold the locknut [A] with a wrench [B] and remove the adjuster assembly [C].

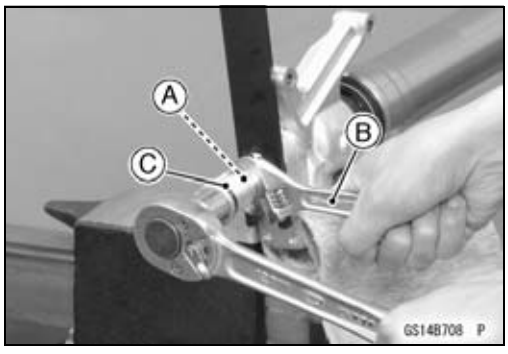

- Remove the push rod [A].

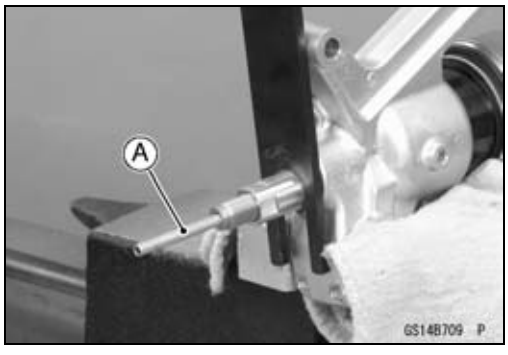

Periodic Maintenance Procedures

- With the outer tube compressed by hands, remove the top plug wrench [A].

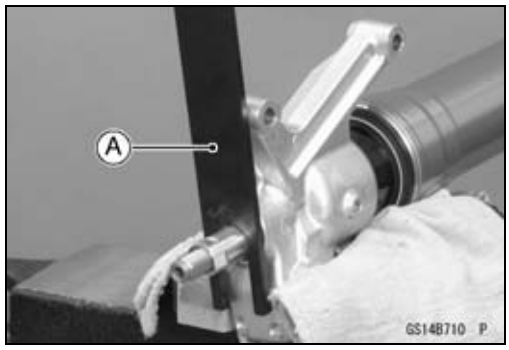

NOTICE
Removing the locknut and pushing the piston rod thread into the cylinder unit will damage the oil seal. Do not remove the locknut from the piston rod.

- Remove the fork leg from the vise.

- Loosen the fork top plug [A] with the top plug wrench [B].

  Special Tool - Top Plug Wrench, 49 mm: 57001-1653

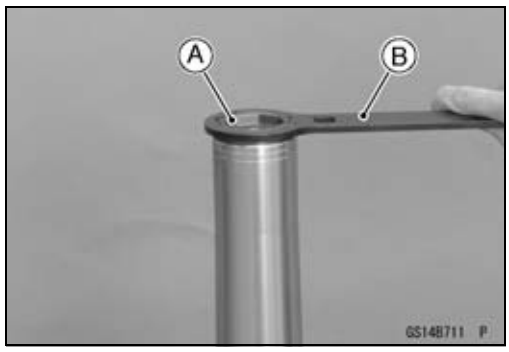

- Remove:
  Cylinder Unit [A]
  Fork Spring [B]

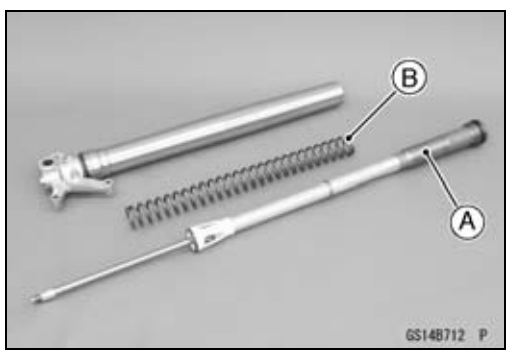

NOTICE
Disassembling the cylinder unit can lead to trouble. Do not disassemble the cylinder unit.

- Holding the top plug wrench (57001-1653) [A] with a vise, loosen the base valve assembly [B] using the top plug wrench (57001-1705) [C].

  Special Tools - Top Plug Wrench, 49 mm: 57001-1653
  Top Plug Wrench, 36 mm: 57001-1705

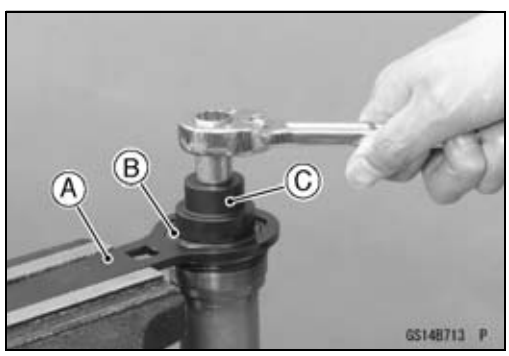

- Remove the base valve assembly [A] from the cylinder unit [B].

NOTE

○*Slowly compress the piston rod until it stops so that the base valve assembly can be removed easily.*

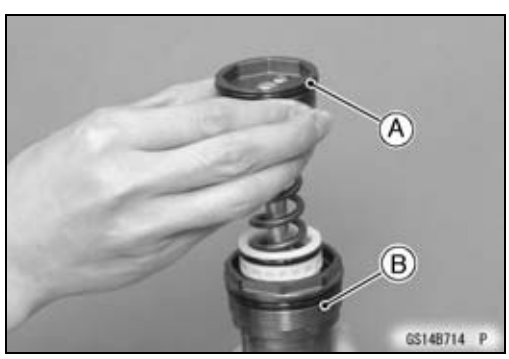

NOTICE
Disassembling the base valve assembly can lead to trouble. **Do not disassemble the base valve assembly.**

Periodic Maintenance Procedures

- Drain the fork oil [A] from the cylinder unit [B] by pumping the piston rod several times.

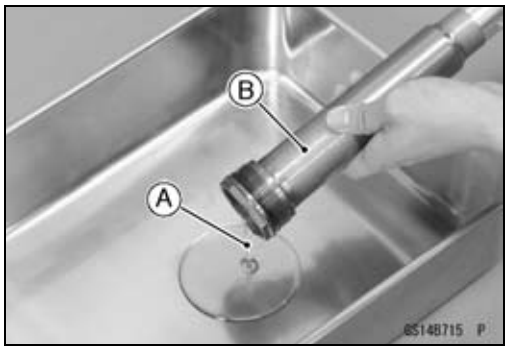

- Hold the front fork at the inverted position for more than 20 minutes to allow the fork oil to fully drain.

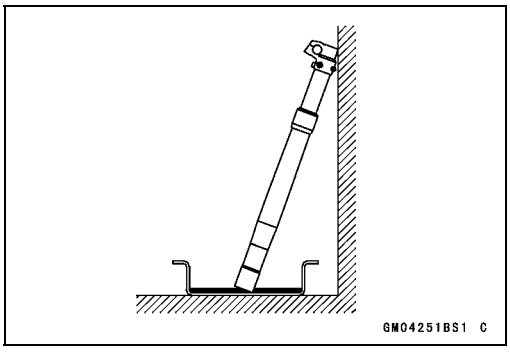

- Clean the threads [A] of cylinder unit and base valve assembly.

- Replace the O-rings [A] on the base valve assembly with new ones.
- Apply specified fork oil to the O-rings on the base valve assembly.

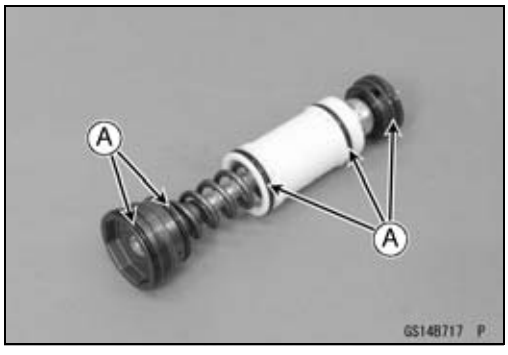

- With the piston rod in fully compressed position, pour the specified amount of fork oil [A] into the cylinder unit.

Suspension Oil - KHL15-10 (1L): 44091-0004
KHL15-10 (4L): 44091-0013

Cylinder Unit Oil Amount: 198 ml (6.69 US oz.)

NOTE

○*Plug the two oil holes [B] on the cylinder unit with fingers until the base valve assembly is installed.*

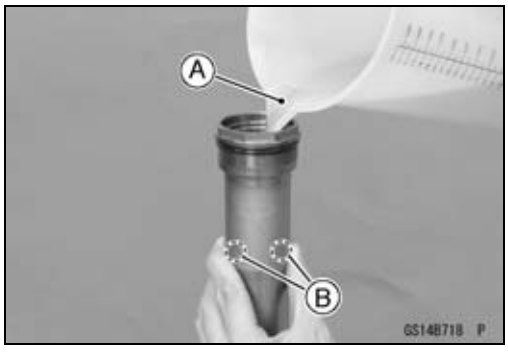

Periodic Maintenance Procedures

- Pump [A] the piston rod [B] slowly several times to expel air.

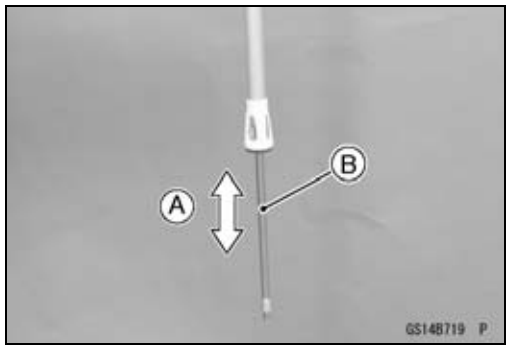

- With the piston rod held immovable in fully compressed position [A], gently install the base valve assembly [B] to the cylinder unit.
- Screw in the base valve assembly in the cylinder unit when the piston rod extends.

NOTE

○*When it is hard to screw in the base valve assembly, pull down the piston rod a little.*

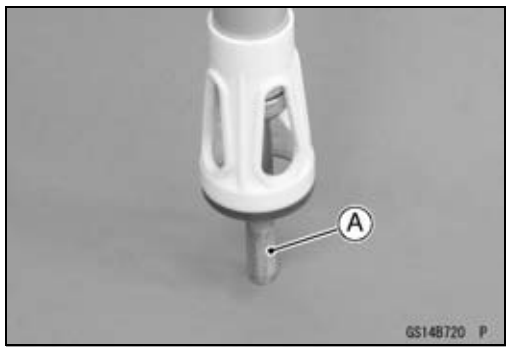

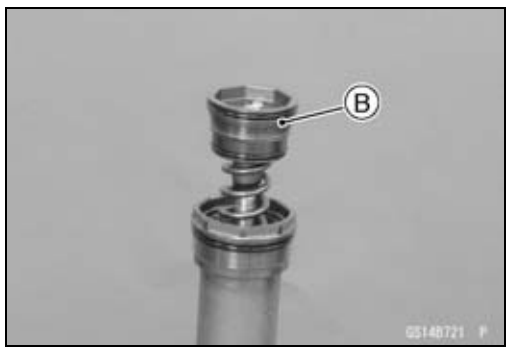

- Hold the top plug wrench (57001-1653) [A] with a vise.
- Holding the cylinder unit [B] with the top plug wrench (57001-1653), torque the base valve assembly [C] using the top plug wrench (57001-1705) [D].

Special Tools - Top Plug Wrench, 49 mm: 57001-1653
Top Plug Wrench, 36 mm: 57001-1705

Torque - Base Valve Assembly: 30 N·m (3.1 kgf·m, 22 ft·lb)

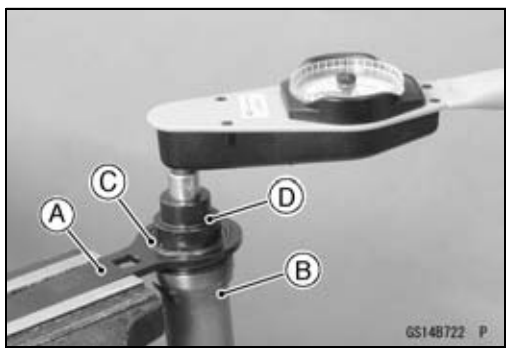

- Protect the piston rod end [A] with a heavy cloth [B] to prevent fork damage.
- Discharge the extra oil off the cylinder unit by pumping [C] the piston rod to full stroke.

NOTICE
Be careful not to bend or damage the piston rod when the piston rod is stroked. Service carefully because oil flows out from the oil hole of the cylinder unit.

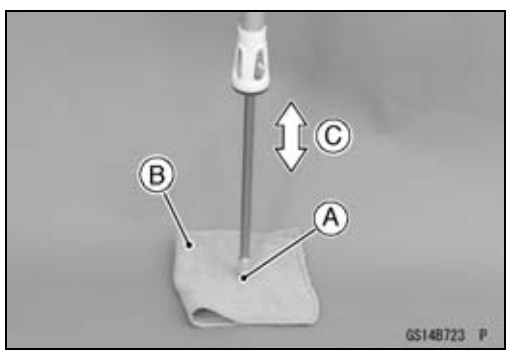

NOTE

○*Check the piston rod sliding surface for damage.*
○*Apply fork oil to the piston rod sliding surface.*

Periodic Maintenance Procedures

- Drain the extra oil from the cylinder unit oil holes [A].

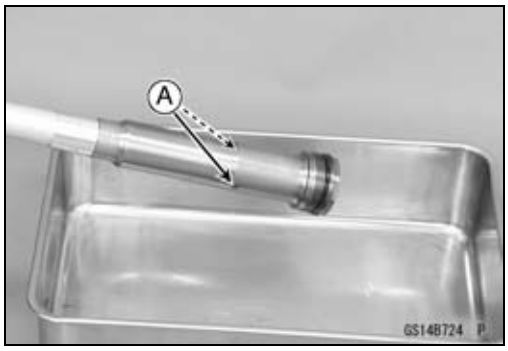

- With the cylinder unit in horizontal position, slide [A] the piston rod [B] by hand to inspect it if operating smoothly.

○If the piston rod is not extend, remove the base valve assembly and perform the air bleeding (pour the specified amount fork oil and discharge an excess of oil).

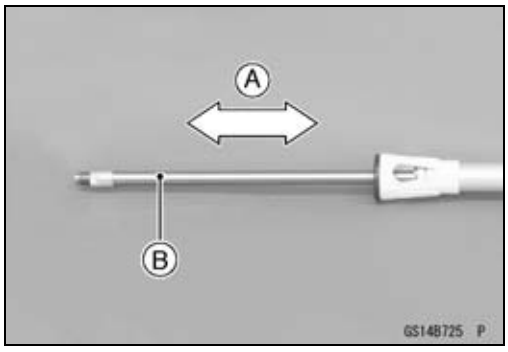

- Make sure about 16 mm (0.63 in.) [A] of push rod thread is exposed from the locknut [B].

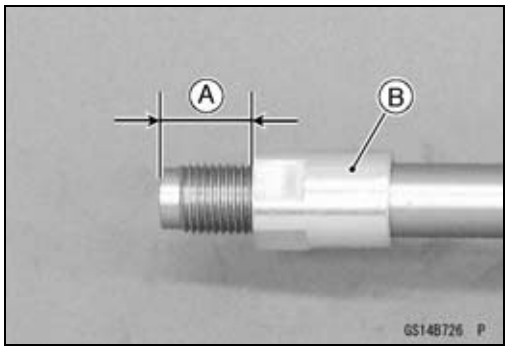

- Completely wipe off the fork oil from the spring [A] and cylinder unit [B].
- Insert the spring and cylinder unit to the outer tube.

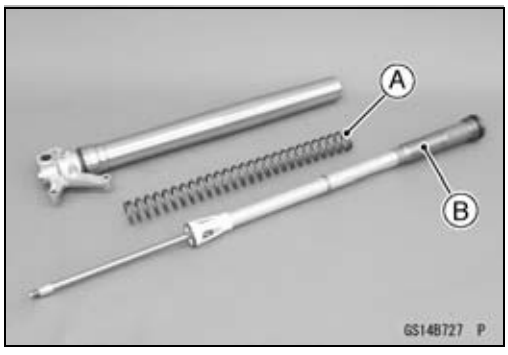

- Temporarily tighten the fork top plug [A] by using the top plug wrench [B].

Special Tool - Top Plug Wrench, 49 mm: 57001-1653

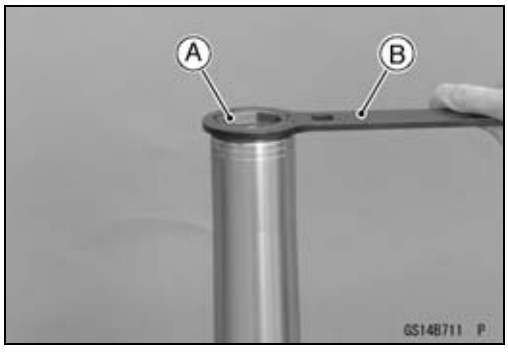

Periodic Maintenance Procedures

- Hold the axle holder with a vise.

○Protect the axle holder with a soft jaw or heavy cloth when using a vise.

⚠ WARNING

Clamping the axle holder too tight can damage it which will affect riding stability.
Do not clamp the axle holder too tight.

- Compress the outer tube by hands and install the top plug wrench [A] between the axle holder bottom and locknut.

Special Tool - Top Plug Wrench, 49 mm: 57001-1653

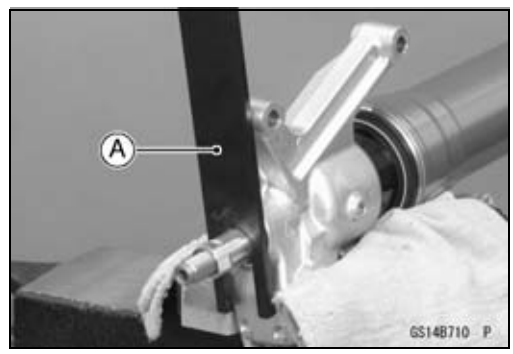

⚠ WARNING

The fork spring applies pressure to the adjuster assembly and can eject the special tool with substantial force if the tool is not properly and securely placed. Be sure the tool is fully in place as shown in the photo, and keep fingers away to avoid getting them pinched between the tool, adjuster assembly and axle holder.

- Insert the push rod [A] into the piston rod.

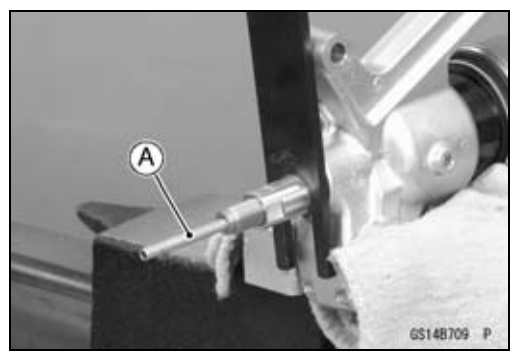

- Replace the O-ring [A] and gasket [B] on the adjuster assembly with new ones and apply specified fork oil to the O-ring.

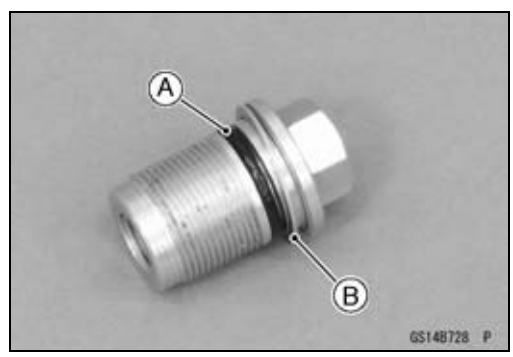

- Slowly turn the adjuster assembly [A] clockwise until resistance is felt and check the clearance between the locknut [B] and adjuster assembly for more than 1 mm (0.04 in.) [C].

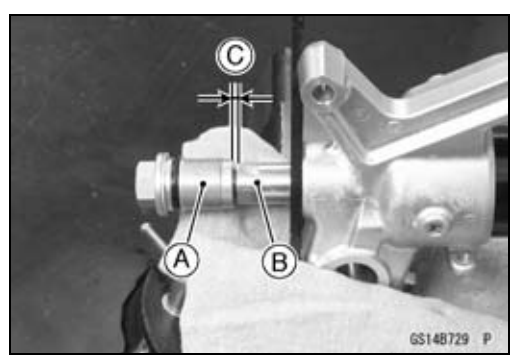

Periodic Maintenance Procedures

- Turn the locknut [A] counterclockwise until it contacts the adjuster assembly [B].
- With the locknut held immovable using a wrench, tighten the adjuster assembly to the specified torque.

  Torque - Adjuster Assembly Locknut: 28 N·m (2.9 kgf·m, 21 ft·lb)
- With the outer tube compressed by hands, remove the top plug wrench.

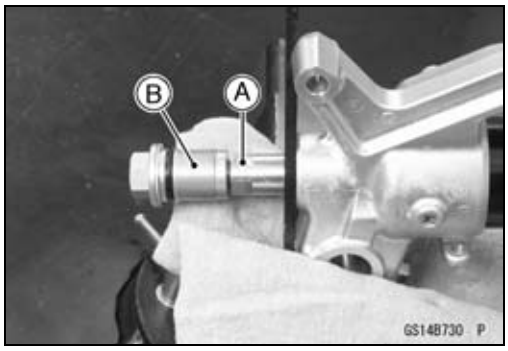

- Apply a non-permanent locking agent to the threads of adjuster assembly.
- Tighten the adjuster assembly [A].

  Torque - Adjuster Assembly: 55 N·m (5.6 kgf·m, 41 ft·lb)

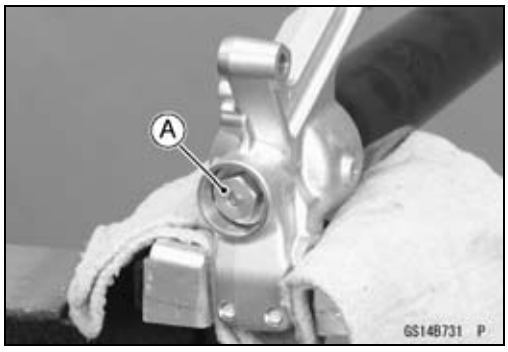

- Using the top plug wrench, remove the fork top plug from the outer tube and slowly slide down the outer tube.

  Special Tool - Top Plug Wrench, 49 mm: 57001-1653
- Pour the specified amount of fork oil [A] into the outer tube [B].

  Suspension Oil - KHL15-10 (1L): 44091-0004
  KHL15-10 (4L): 44091-0013

  Outer Tube Oil Amount

Standard:	**335 mL (11.3 US oz.) (EUR, BR) 345 mL (11.7 US oz.)**
Adjustable Range:	**320 ~ 380 mL (10.8 ~ 12.8 US oz.)**

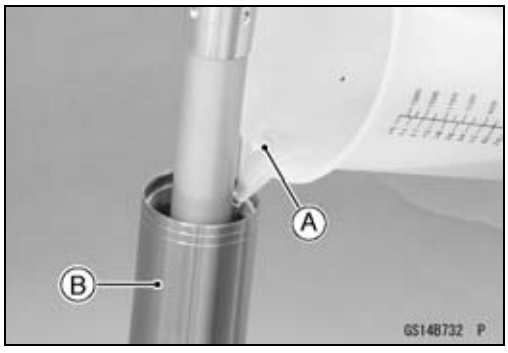

- Replace the O-ring on the cylinder unit with a new one.
- Raise the outer tube [A] and temporarily install the fork top plug [B] to the outer tube with the top plug wrench [C].

  Special Tool - Top Plug Wrench, 49 mm: 57001-1653

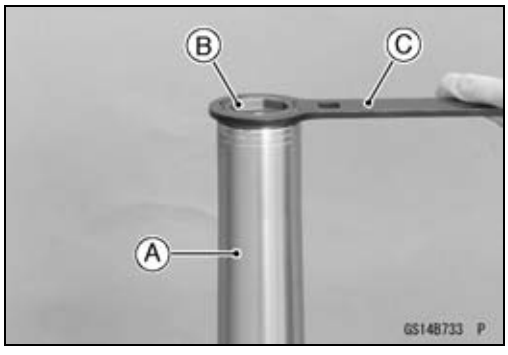

Periodic Maintenance Procedures

- Install the front forks to the motorcycle (see Front Fork Installation in the Suspension chapter).
- Loosen the front fork mounting bolts (upper).
- After installing the front fork, tighten the top plug [A].

Special Tool - Top Plug Wrench, 49 mm [B]: 57001-1653

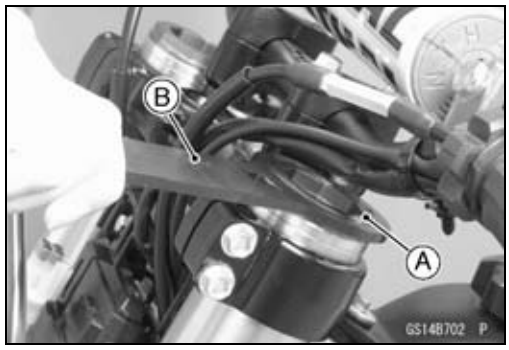

The torque of fork top plug is specified to **30 N·m (3.1 kgf·m, 22 ft·lb)** however, when you use the top plug wrench (special tool) [A], reduce the torque to 90% of the specified value **[27 N·m (2.8 kgf·m, 20 ft·lb)]** due to the distance [B] between the center of the square hole, where the torque wrench is fitted, and that of the octagonal hole of the wrench.

This torque value **[27 N·m (2.8 kgf·m, 20 ft·lb)]** is applicable when you use a torque wrench whose length gives leverage of approximately 310 mm between the grip point to the center of the coupling square.

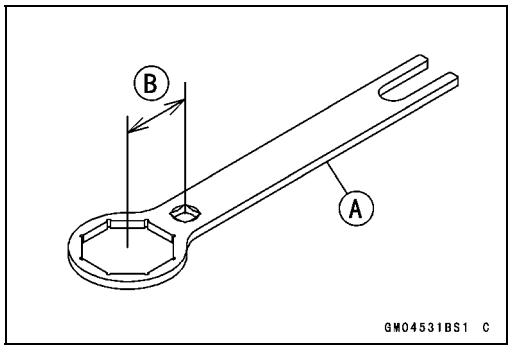

Torque - Front Fork Top Plug: 30 N·m (3.1 kgf·m, 22 ft·lb)
Front Fork Clamp Bolts (Upper): 20 N·m (2.0 kgf·m, 15 ft·lb)

- Install the removed parts (see appropriate chapters).
- Adjust the compression and rebound dumping force adjusters (see Compression Damping Adjustment and Rebound Damping Adjustment in the Suspension chapter).

KX450FD ~

- Remove:
  Number Plate (see Number Plate Removal in the Frame chapter)
  Front Wheel (see Front Wheel Removal in the Wheels/Tires chapter)
  Air Valve Plug [A]
- Bleed air by pushing down the air valve.

NOTE

○*Do not compress the inner tube.*

- Loosen the front fork clamp bolts (upper) [A].

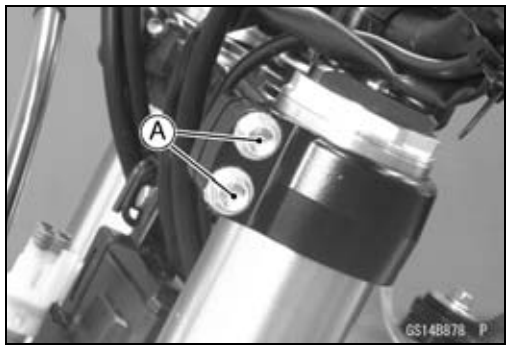

NOTE

○*Set rebound and compression damping setting to the softest settings before disassembly to minimize damping forces that can hinder disassembly. Record the setting before turning the adjuster.*

Periodic Maintenance Procedures

- Turn the handlebar to one side, and loosen the fork top plug [A].

  Special Tool - Top Plug Wrench, 49 mm [B]: 57001-1653

NOTE

○*Do not remove the top plug.*

- Remove:
  Front Fork (see Front Fork Removal in the Suspension chapter)

- Thoroughly clean the fork before disassembly.

NOTICE
Be careful not scratch the inner tube and not to damage the dust seal. **Avoid scratching or damaging the inner tube or the dust seal. Use a mild detergent and sponge out dirt with plenty of water.**

- Using the top plug wrench [A], remove the fork top plug [B] from the outer tube [C] and slowly slide down [D] the outer tube.

  Special Tool - Top Plug Wrench, 49 mm: 57001-1653

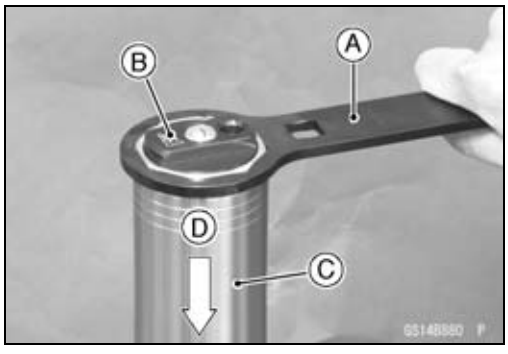

- Place an oil pan under the front fork and drain the fork oil [A].

NOTE

○*Pump the fork tube several times to discharge the fork oil.*

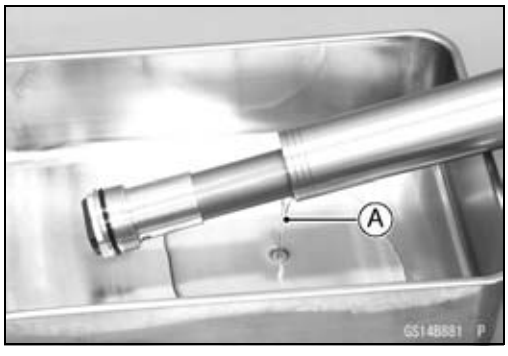

- Raise the outer tube and temporarily install the fork top plug [A] to the outer tube [B] with the top plug wrench [C].

  Special Tool - Top Plug Wrench, 49 mm: 57001-1653

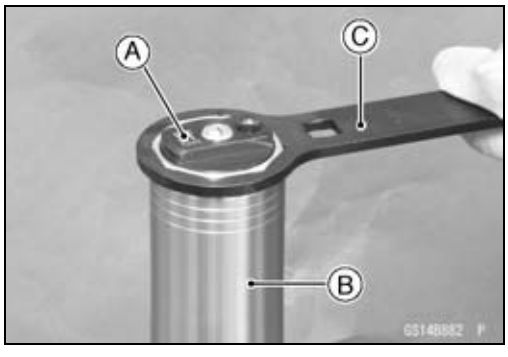

Periodic Maintenance Procedures

- Hold the axle holder [A] with a vise.

○Protect the axle holder with a soft jaw or heavy cloth when using a vise.

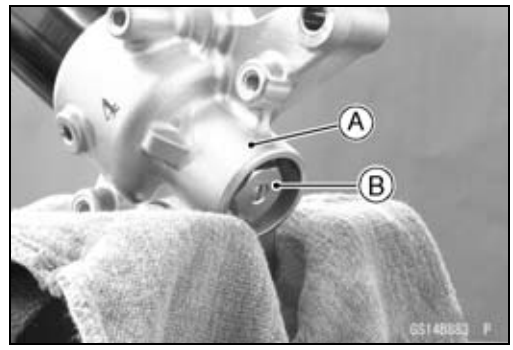

⚠ WARNING

Clamping the axle holder too tight can damage it which will affect riding stability.
Do not clamp the axle holder too tight.

- Loosen the adjuster assembly [B] completely.

NOTE

○*When removing the rebound adjuster assembly, do not use an impact wrench.*

- Compress the outer tube by hands and remove the adjuster assembly from the axle holder part so that the locknut appears about 20 ~ 30 mm (0.079 ~ 0.12 in.)

- Hold the locknut [A] with a wrench [B] and remove the adjuster assembly [C].

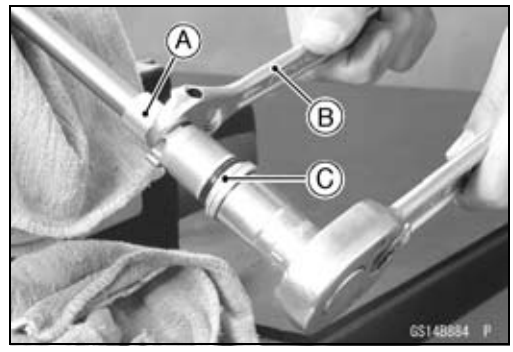

- Remove the push rod [A].

NOTICE

Removing the locknut and pushing the piston rod thread into the cylinder unit will damage the oil seal.
Do not remove the locknut from the piston rod.

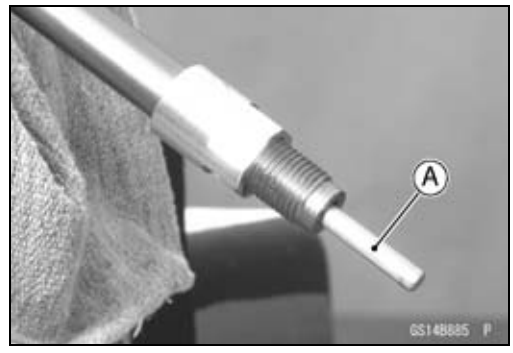

- Remove the fork leg from the vise.

- Remove the fork top plug [A] with the top plug wrench [B].

Special Tool - Top Plug Wrench, 49 mm: 57001-1653

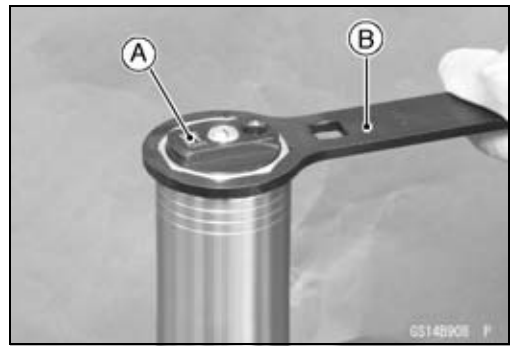

- Remove the cylinder unit [A] from the outer tube [B].

NOTICE
Disassembling the cylinder unit can lead to trouble. Do not disassemble the cylinder unit.

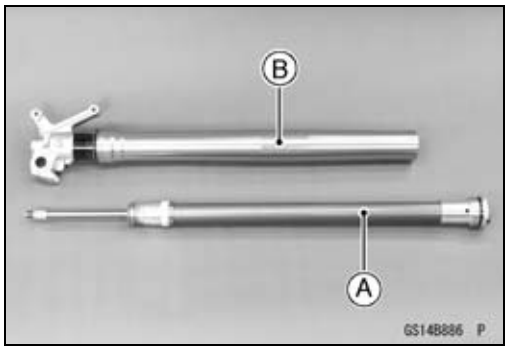

- Holding the top plug wrench (57001-1653) [A] with a vise, loosen the base valve assembly [B] using the top plug wrench (57001-1787) [C].

Special Tools - Top Plug Wrench, 49 mm: 57001-1653
Top Plug Wrench, 21 mm: 57001-1787

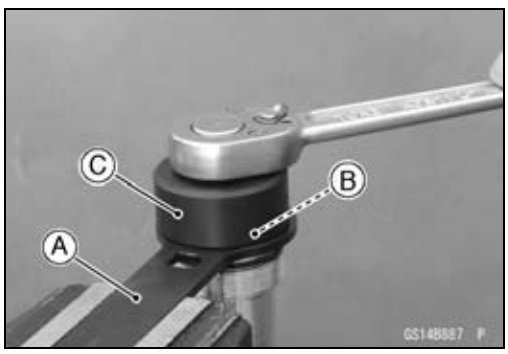

- Remove the base valve assembly [A] from the cylinder unit [B].

NOTE

○*Slowly compress the piston rod until it stops so that the base valve assembly can be removed easily.*

NOTICE
Disassembling the base valve assembly can lead to trouble. **Do not disassemble the base valve assembly.**

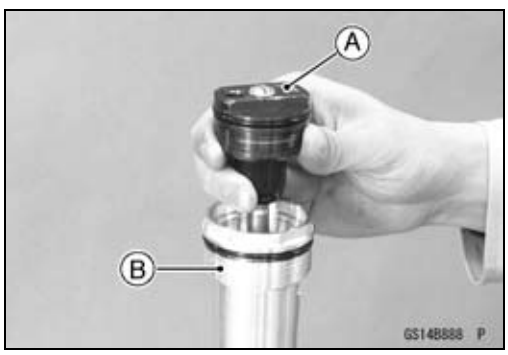

- Drain the fork oil [A] from the cylinder unit [B] by pumping the piston rod several times.

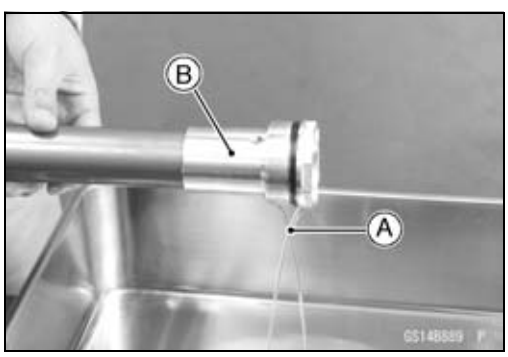

- Hold the front fork at the inverted position for more than 20 minutes to allow the fork oil to fully drain.

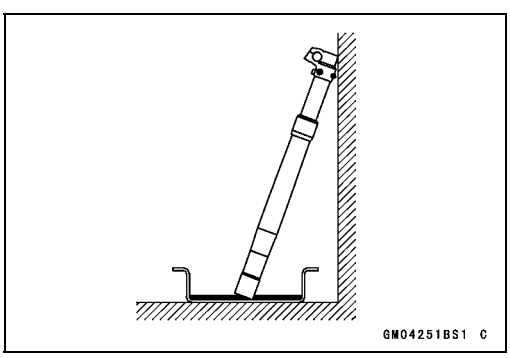

Periodic Maintenance Procedures

- Clean the threads [A] of cylinder unit and base valve assembly.

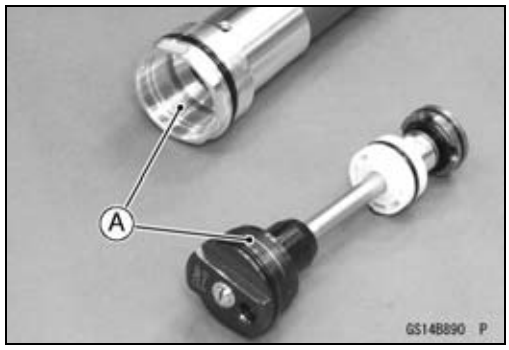

- Replace the O-rings [A] on the base valve assembly and cylinder unit with new ones.
- Apply specified fork oil to the O-rings on the base valve assembly.

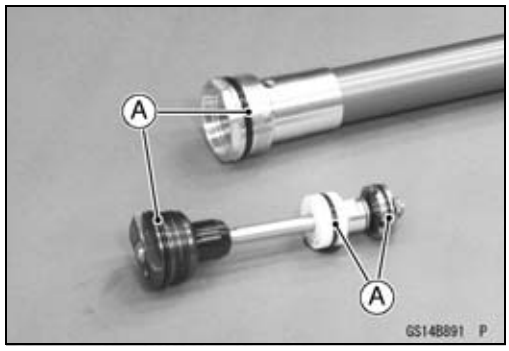

- With the piston rod in fully compressed position, pour the specified amount of fork oil [A] into the cylinder unit [C].

  Suspension Oil - KHL15-11 (1L): 44091-0020
  KHL15-11 (4L): 44091-0021

  Cylinder Unit Oil Amount: 343 ml (11.6 US oz.)

NOTE

○*Plug the two oil holes [B] on the cylinder unit with fingers until the base valve assembly is installed.*

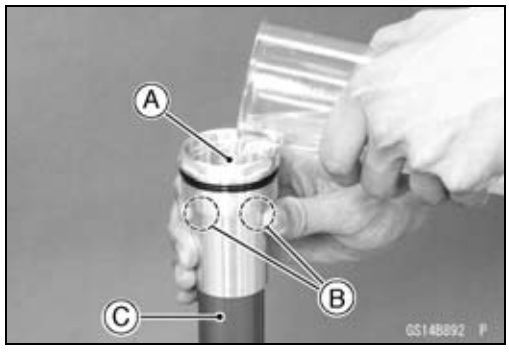

- Pump [A] the piston rod [B] slowly several times to expel air.

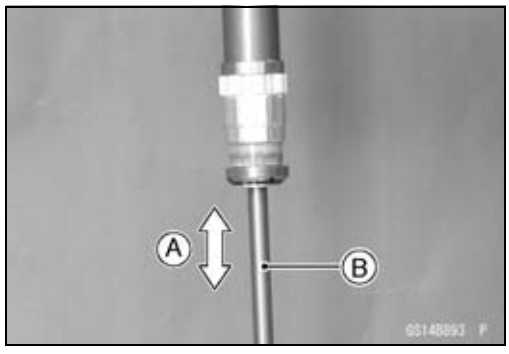

Periodic Maintenance Procedures

- With the piston rod held immovable in fully compressed position [A], gently install the base valve assembly [B] to the cylinder unit.

NOTE

○*Plug the two oil holes on the cylinder unit with fingers until the base valve assembly is installed.*

- Screw in the base valve assembly in the cylinder unit when the piston rod extends.

NOTE

○*When it is hard to screw in the base valve assembly, pull down the piston rod a little.*

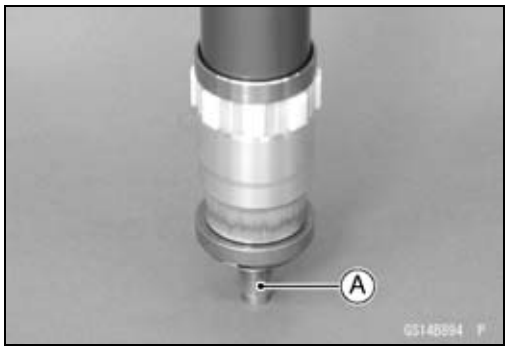

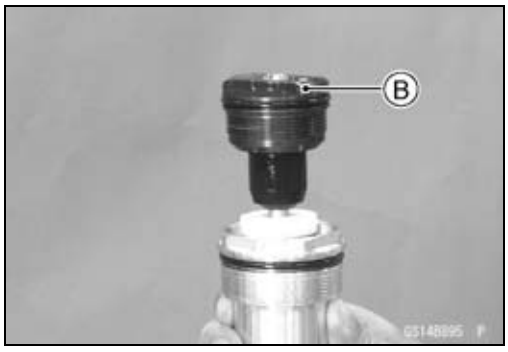

- Hold the top plug wrench (57001-1653) [A] with a vise.
- Holding the cylinder unit [B] with the top plug wrench (57001-1787), torque the base valve assembly [C] to the specified torque.

Special Tools - Top Plug Wrench, 49 mm: 57001-1653
Top Plug Wrench, 21 mm: 57001-1787

Torque - Base Valve Assembly: 30 N·m (3.1 kgf·m, 22 ft·lb)

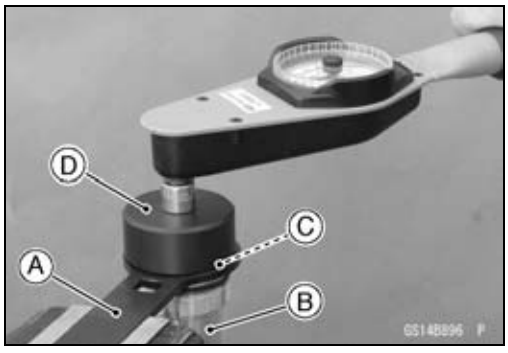

NOTE

○*Check if the locknut is completely screwed on to the piston rod.*

- Protect the piston rod end [A] with a heavy cloth [B] to prevent fork damage.
- Discharge the extra oil off the cylinder unit by pumping [C] the piston rod to full stroke.

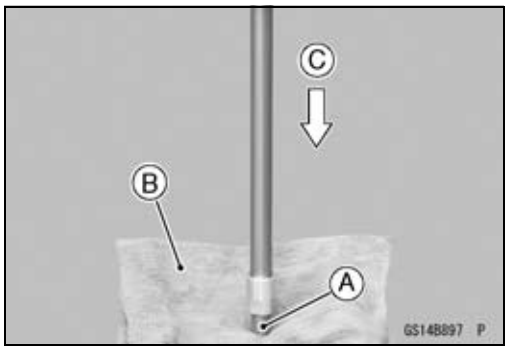

NOTICE

Be careful not to bend or damage the piston rod when the piston rod is stroked. Service carefully because oil flows out from the oil hole of the cylinder unit.

NOTE

○*Check the piston rod sliding surface for damage.*
○*Apply fork oil to the piston rod sliding surface.*

Periodic Maintenance Procedures

- Drain the extra oil from the cylinder unit oil holes [A].

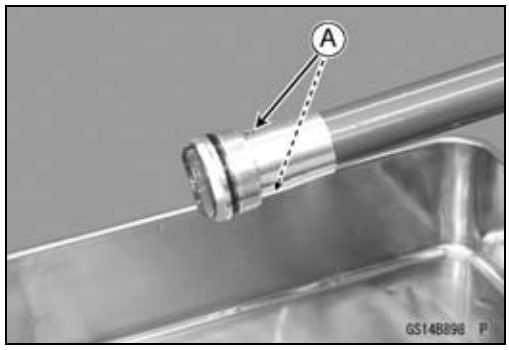

- With the cylinder unit in horizontal position, slide [A] the piston rod [B] by hand to inspect it if operating smoothly.

NOTICE
Be careful not to bend or damage the piston rod when the piston rod is stroked.

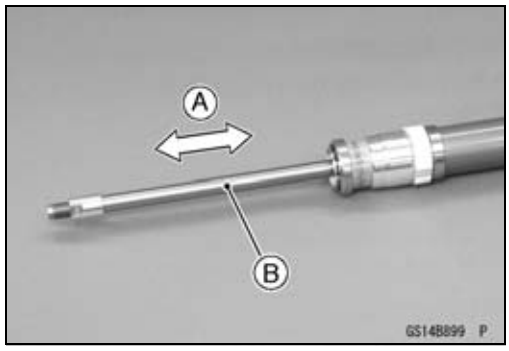

- Make sure about 16 mm (0.63 in.) [A] of push rod thread is exposed from the locknut [B].

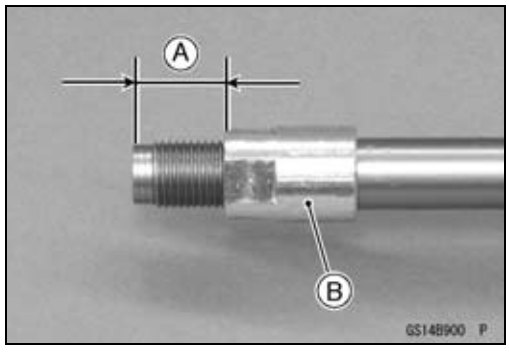

- Completely wipe off the fork oil from the cylinder unit [A].
- Insert the cylinder unit to the outer tube [B].

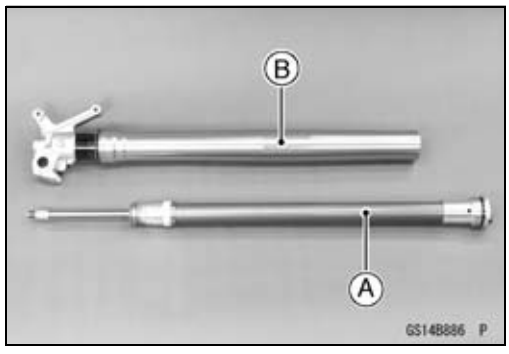

- Temporarily tighten the fork top plug [A] by using the top plug wrench [B].

  Special Tool - Top Plug Wrench, 49 mm: 57001-1653

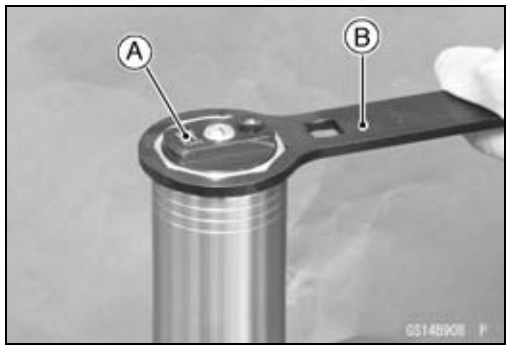

Periodic Maintenance Procedures

- Hold the axle holder with a vise.

○Protect the axle holder with a soft jaw or heavy cloth when using a vise.

⚠ WARNING

Clamping the axle holder too tight can damage it which will affect riding stability.
Do not clamp the axle holder too tight.

- Insert the push rod [A] into the piston rod.

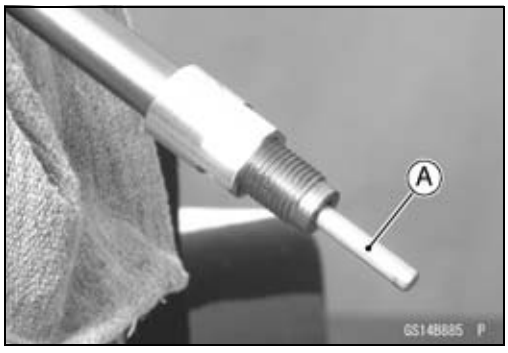

- Replace the O-ring [A] and gasket [B] on the adjuster assembly with new ones and apply specified fork oil to the O-ring.

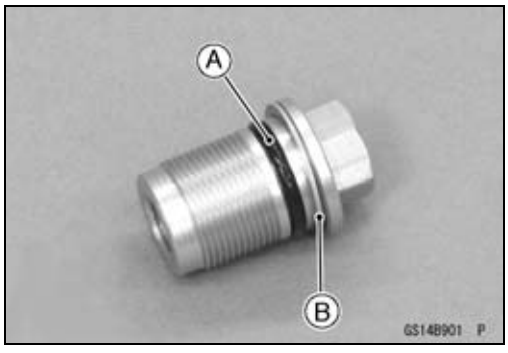

- Slowly turn the adjuster assembly [A] clockwise until resistance is felt and check the clearance between the locknut [B] and adjuster assembly for more than 1 mm (0.04 in.) [C].

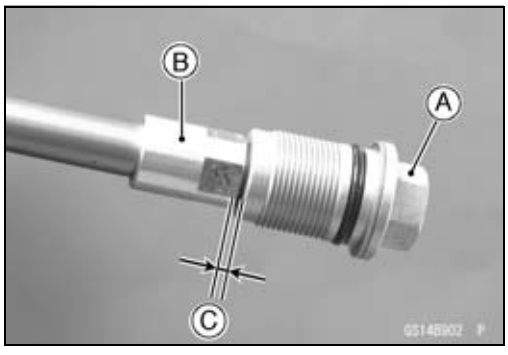

- Turn the locknut [A] counterclockwise until it contacts the adjuster assembly [B].
- Secure the locknut using a wrench, tighten the adjuster assembly to the specified torque.

Torque - Adjuster Assembly Locknut: 28 N·m (2.9 kgf·m, 21 ft·lb)

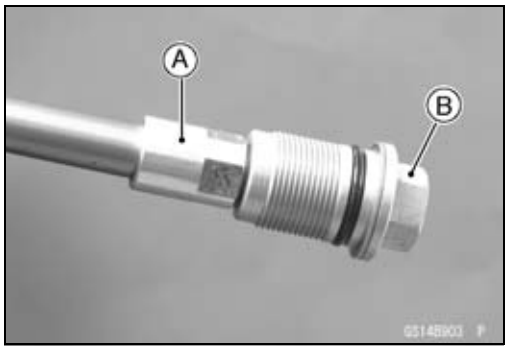

Periodic Maintenance Procedures

- Tighten the adjuster assembly [A].

  Torque - Adjuster Assembly: 55 N·m (5.6 kgf·m, 41 ft·lb)
- Remove the fork leg from the vise.

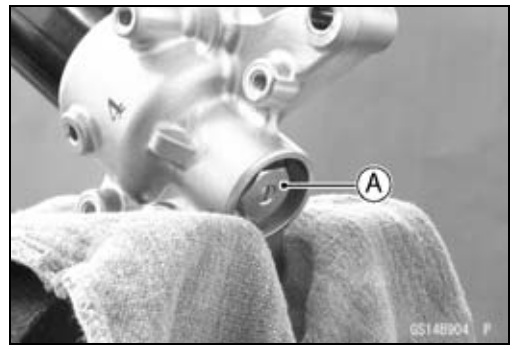

- Using the top plug wrench, remove the fork top plug from the outer tube and slowly slide down the outer tube [A].

  Special Tool - Top Plug Wrench, 49 mm: 57001-1653
- Pour the specified amount of fork oil [B] into the outer tube.

  Suspension Oil - KHL15-11 (1L): 44091-0020
  KHL15-11 (4L): 44091-0021

  Outer Tube Oil Amount

Standard:	**235 mL (7.95 US oz.)**
Adjustable Range:	**190 ~ 265 mL (6.42 ~ 8.96 US oz.)**

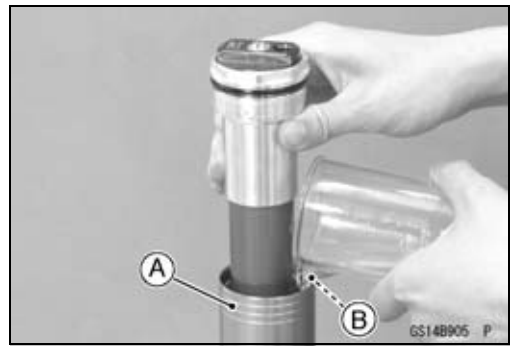

- Raise the outer tube [B] and temporarily install the fork top plug [A] to the outer tube with the top plug wrench [C].

  Special Tool - Top Plug Wrench, 49 mm: 57001-1653

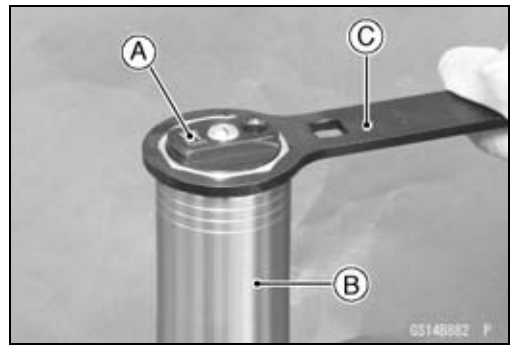

- Apply grease to the O-ring on the air valve adapter.

NOTE

○*When using the air valve adapter, make sure that there is no dust or foreign material on the threads and O-ring.*

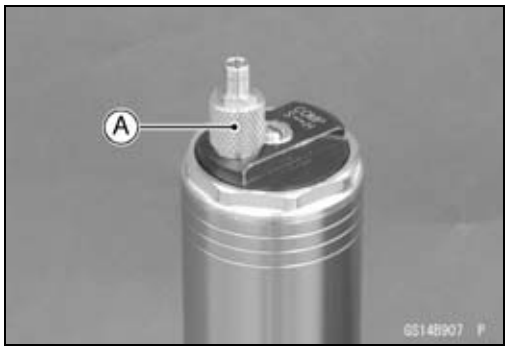

- Install the air valve adapter [A].
- Adjust the air pressure in each fork leg within the specified range below.

Air Pressure:

Standard setting: 240 kPa (2.4 kgf/cm², 35 psi)

Adjustable Range: 220 ~ 280 kPa (2.2 ~ 2.8 kgf/cm², 32 ~ 41 psi)

NOTE

○*During air pressure adjustment, be careful that the lower end of the front fork does not contact the ground surface.*

NOTICE
Do not pressurize the fork to more than 500 kPa (5.0 kgf/cm², 73 psi) or the fork may be damaged.

- Remove the air valve adapter.

NOTE

○*Do not ride with the air valve adapter attached to the motorcycle.*
○*Always cap the air valve adapter during storage.*

- Install the front forks to the motorcycle (see Front Fork Installation in the Suspension chapter).

○Temporarily tighten the front fork clamp bolts.

- After installing the front fork, tighten the top plug [A].

Special Tool - Top Plug Wrench, 49 mm [B]: 57001-1653

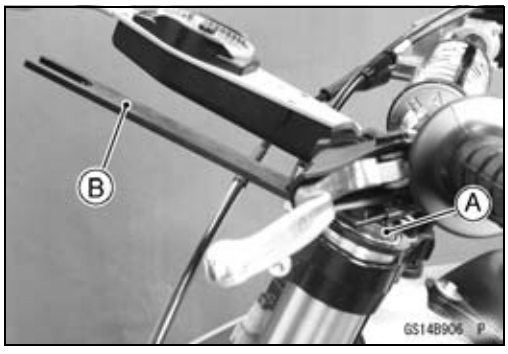

Periodic Maintenance Procedures

The torque of fork top plug is specified to **45 N·m (4.6 kgf·m, 33 ft·lb)** however, when you use the top plug wrench (special tool) [A], reduce the torque to 90% of the specified value **[41 N·m (4.2 kgf·m, 30 ft·lb)]** due to the distance [B] between the center of the square hole, where the torque wrench is fitted, and that of the octagonal hole of the wrench.

This torque value **[41 N·m (4.2 kgf·m, 30 ft·lb)]** is applicable when you use a torque wrench whose length gives leverage of approximately 310 mm between the grip point to the center of the coupling square.

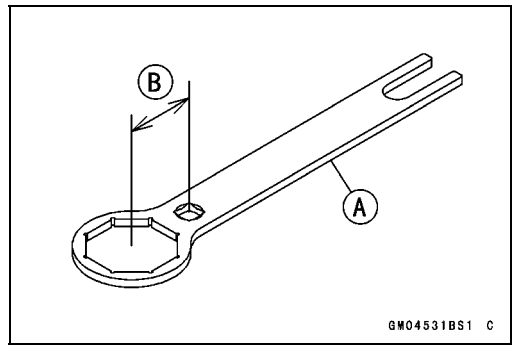

Torque - Front Fork Top Plug: 45 N·m (4.6 kgf·m, 33 ft·lb)
Front Fork Clamp Bolts (Upper): 20 N·m (2.0 kgf·m, 15 ft·lb)

- Install the removed parts (see appropriate chapters).
- Adjust the air pressure (see Air Pressure Adjustment (KX450FD ~) in the Suspension chapter).
- Adjust the compression and rebound damping force adjusters (see Compression Damping Adjustment and Rebound Damping Adjustment in the Suspension chapter).

⚠ WARNING

Improper fork leg adjustment can cause poor handling and loss of stability, which could lead to an accident. Always adjust the fork legs on the left and right side to the same setting.

- Tighten:

Torque - Air Valve Plug: 0.2 N·m (0.020 kgf·m, 1.8 in·lb)

NOTICE

Be sure to install the air valve plug to prevent dust from entering.

Rear Shock Absorber Inspection

- Bounce [A] the rear of the motorcycle up and down and check for smooth suspension stroke.
- Remove the rear frame (see Rear Frame Removal in the Frame chapter).
- Check for a broken or collapsed spring.
- Check the shock for a bent shaft or oil leaks.

★If the shock does not smoothly or damaged, replace or repair defective parts.

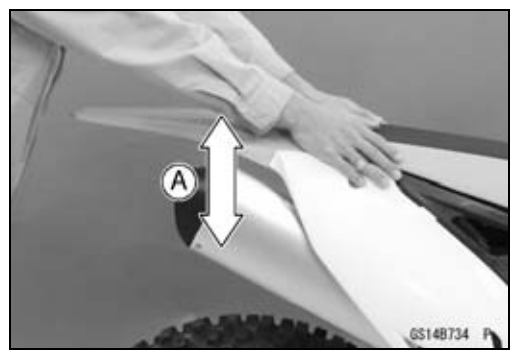

Rear Shock Absorber Oil Change

The oil should be changed in the rear shock absorber at least once per racing season. The frequency for best performance must be based upon riding conditions and rider ability.

- Remove the rear shock absorber (see Rear Shock Absorber Removal in the Suspension chapter).
- Remove the shock absorber spring (see Spring Replacement in the Suspension chapter).

Periodic Maintenance Procedures

- Insert a suitable tool to center [A] of the reservoir cap, and release the nitrogen gas completely (keep the suitable tool inserted).

○For instructions on how to use the tool, follow the operation manual provided by the manufacturer.

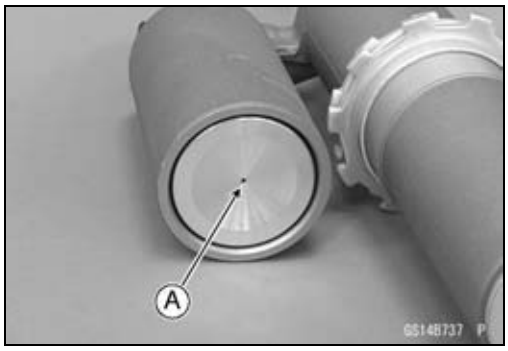

⚠ WARNING

The shock contains high-pressure nitrogen gas that when suddenly released can eject oil and internal shock parts at high velocity, causing serious injury. To avoid injury, do not point a suitable tool toward your face or body when releasing nitrogen gas pressure since an oil mist is often released with the nitrogen. Always release nitrogen gas pressure before disassembling the rear shock absorber to prevent explosive separation of parts.

- Adjust the gas reservoir damping adjusters [A] to the softest position.

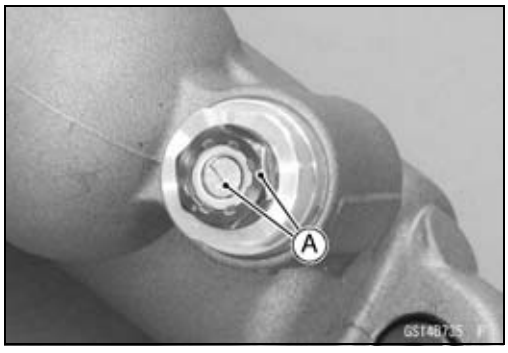

- Tap [A] evenly at the gaps [B] in the stopper [C] with suitable tools [D] to free the stopper from the rear shock body.

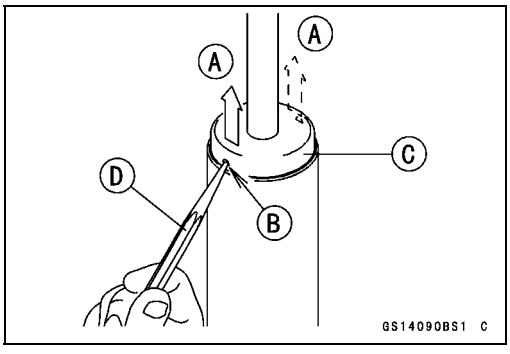

- Slide the stopper up the top of the piston rod then lightly tap around the seal with a suitable rod and mallet, and push the seal assembly 10 mm (0.39 in.) down.
- Remove the circlip [A].
- Wrap a heavy cloth around the rear shock body and piston rod to prevent the oil diffusion.
- Lightly move the piston rod back and forth, and pull out the piston rod assembly.
- Pour the oil out of the rear shock body into a suitable container.

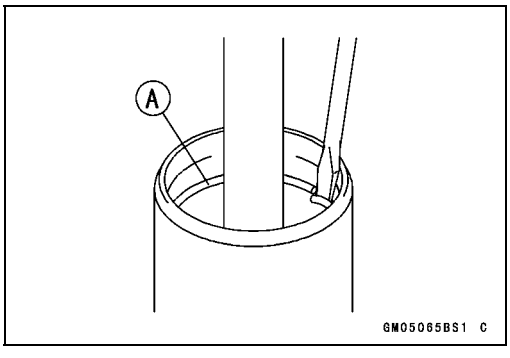

Periodic Maintenance Procedures

- Remove the suitable tool from the reservoir cap.
- Using a suitable tool [A] and press, push the reservoir cap [B] in 10 mm (0.39 in.).
- Remove the circlip [C] from the gas reservoir.

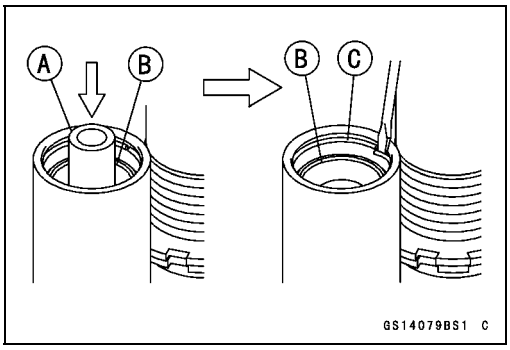

- Pour the suspension oil into the rear shock body to 30 mm (1.2 in.) [A] from the rear shock body upper end [B]. Push the piston rod assembly and seal downward again into the place where circlip is installed, and then fit the circlip [C] into the rear shock groove securely.

  Suspension Oil - KHV10-K2C (1L): 45024-0002
- Press the piston rod assembly downward, and press out the reservoir cap [D] from the rear shock by the oil pressure.

★If the reservoir cap is pressed out, inject the air until the reservoir cap end is flush with the gas reservoir end. Then remove the reservoir cap using a suitable tool.

NOTICE
Be careful that if the piston rod assembly is pressed downward mightily, the reservoir cap may crush.

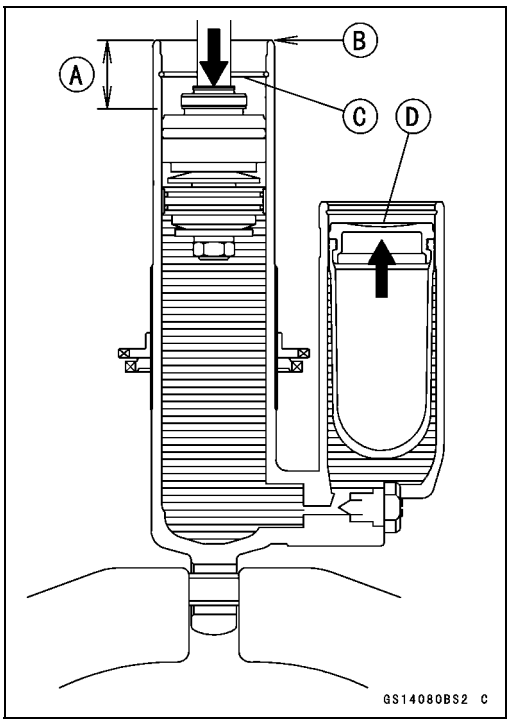

- Remove the circlip [A].
- Wrap a heavy cloth around the rear shock body and piston rod to prevent the oil diffusion.
- Lightly move the piston rod back and forth, and pull out the piston rod assembly.
- Pour the oil out of the rear shock body into the suitable container.

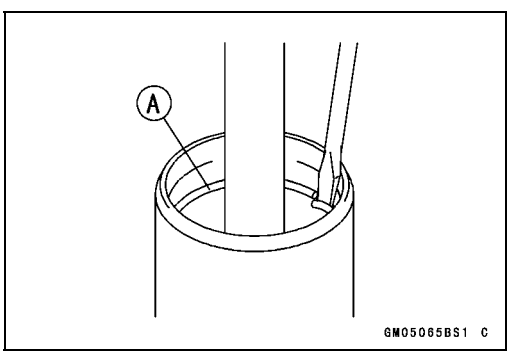

- Pour the suspension oil into the gas reservoir to 50 ~ 60 mm (2.0 ~ 2.4 in.) [A] from the gas reservoir upper end.

  Suspension Oil - KHV10-K2C (1L): 45024-0002

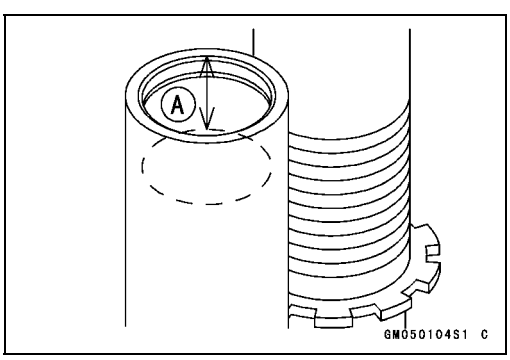

- Replace the bladder [A] with a new one.

NOTICE
The bladder is damaged and its performance is reduced noticeably if the bladder is damaged or deformed during reuse.

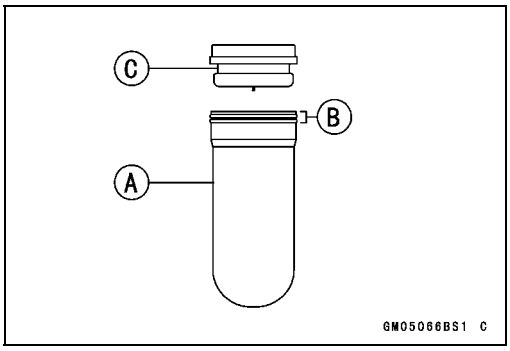

- Apply grease to the lip [B] of the bladder and install the reservoir cap [C].

- Press the reservoir cap assembly [A] downward slowly into the gas reservoir to 10 mm (0.39 in.) [B] from the gas reservoir upper end.

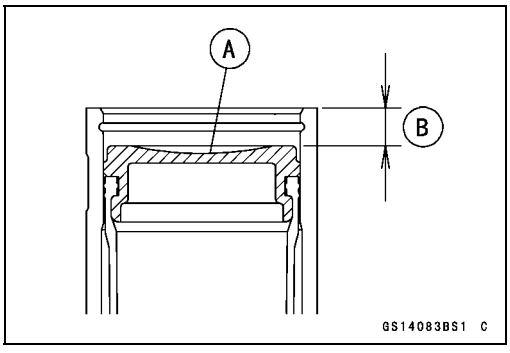

- Incline the rear shock absorber to the gas reservoir side to release the air in the gas reservoir.

NOTICE
Ensure that no air remains in the system.

- Replace the circlip with a new one.

⚠ WARNING
Pressurized nitrogen gas can explode out of the shock reservoir cap if a weakened, deformed or flawed circlip is used, allowing oil and internal parts to burst out of the reservoir with great force and cause serious injury. To avoid injury, always use a new circlip whenever the shock is reassembled.

- Mount the circlip [A] in the groove in the gas reservoir.

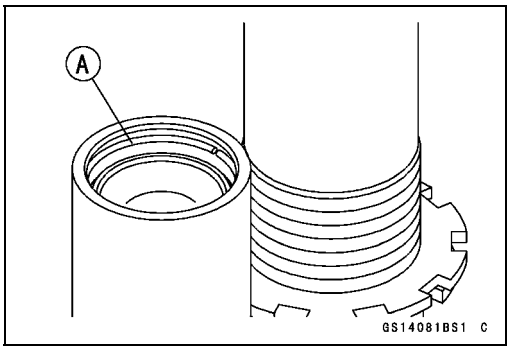

Periodic Maintenance Procedures

- Pour the suspension oil into the rear shock body to 50 mm (2.0 in.) [A] from the lower end of the rear shock body [B].

  Suspension Oil - KHV10-K2C (1L): 45024-0002

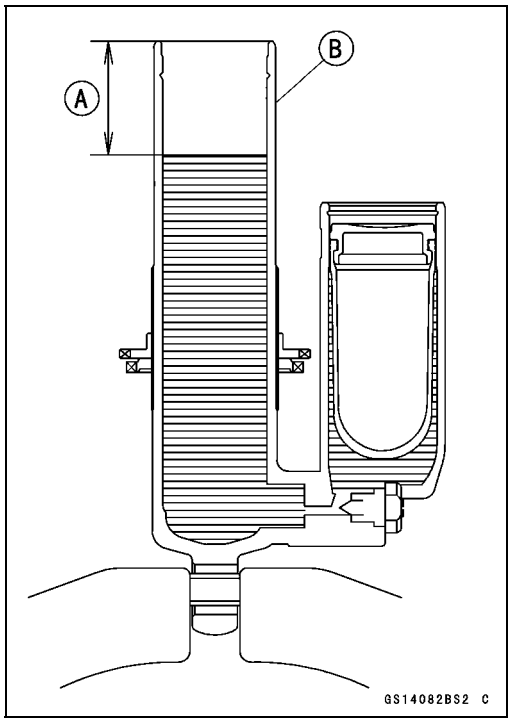

- Adjust the gas reservoir damping adjusters [A] to the hardest position.

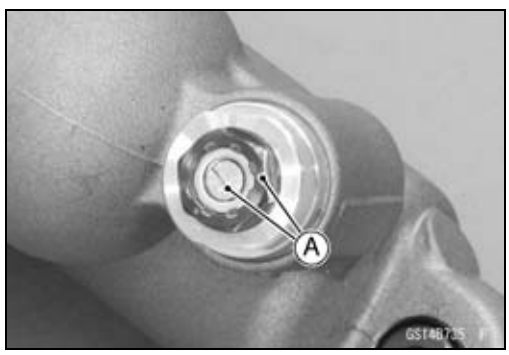

- Insert the piston end [A] of the piston rod assembly into the rear shock body [C] slowly. (Do not insert the oil seal assembly [B] yet.) Pump the piston rod until all the air is forced out of the rear shock body.

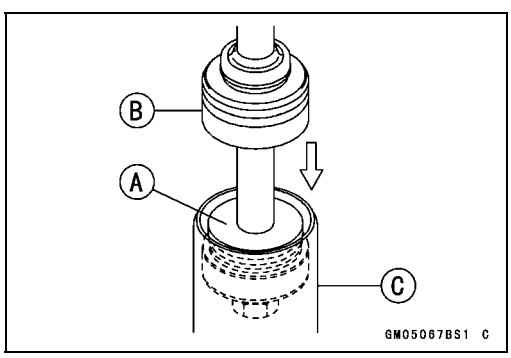

- Adjust the gas reservoir damping adjusters [A] to the softest position.

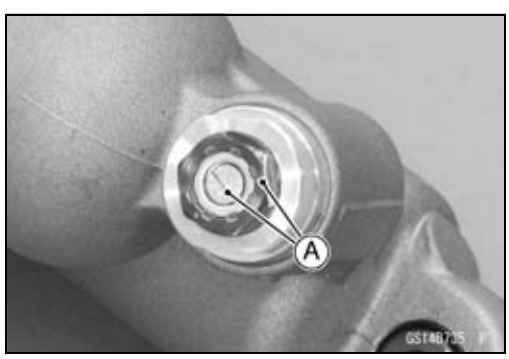

- Insert the suitable tool to center of the reservoir cap, and operate the piston rod assembly after pour 98 kPa (1.0 kgf/cm², 14 psi) nitrogen gas, and then push out to the place where the reservoir cap hits the circlip. Now, check that the edge of the reservoir cap is pushed out to 2 mm (0.08 in.) deeper than the edge of the gas reservoir.

⚠ WARNING

Oil leaking from the shock or reservoir diminishes shock performance and may cause adverse handling and/or shock performance. If the reservoir cap is not pushed out to its specified position, oil may spray out during pressurization and/or leak during use. Be sure the reservoir cap is in its proper position before pressurizing the shock.

- Pump the piston rod [A] until all the air is forced out of the rear shock body [B].

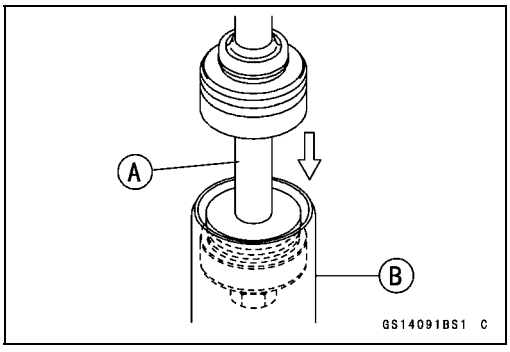

- Pull up the piston rod assembly, and pour the suspension oil into the rear shock body to upper end of the rear shock body.

  Suspension Oil - KHV10-K2C (1L): 45024-0002

- Push the oil seal assembly into the rear shock body until it just clears the circlip groove.
- Replace the circlip with a new one.
- Fit the circlip [A] into the groove in the rear shock body [B].

NOTICE

If the circlip is not a certain fit in the groove in the rear shock body, the piston rod assembly may come out of the shock absorber when injecting the nitrogen gas or riding the motorcycle.

- Pull up the piston rod assembly [C] against the circlip.
- Force the stopper [D] into the rear shock body by lightly tapping around the edge of the stopper with a mallet.

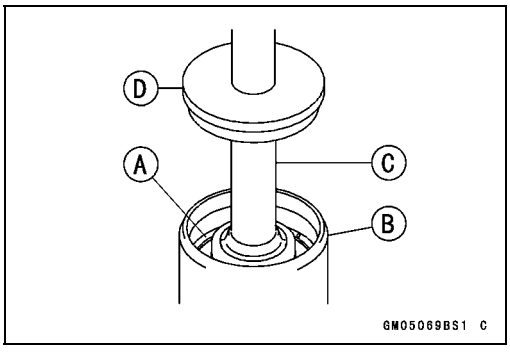

Periodic Maintenance Procedures

- Check the rear shock body and gas reservoir for oil and gas leaks.

★If there are no leaks, inject the nitrogen gas up to the 1 000 kPa (10.2 kgf/cm², 145 psi) pressure.

⚠ WARNING

High pressure gas is dangerous and can explode, causing serious injury. To avoid injury, have a qualified mechanic pressurize the shock reservoir with nitrogen gas only. Do not use air or other gases, since they may cause premature wear, rust, fire hazard or substandard performance.

- Remove the suitable tool from the reservoir cap.
- Check the rear shock absorber as follows:

○Adjust the rebound damping adjuster [A] to the hardest position.

○Protect the piston rod end with a heavy cloth to prevent damage.

○Push down [B] the rear shock absorber [C] to fully compressed position.

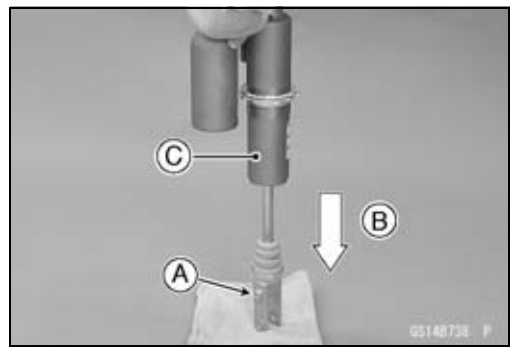

NOTICE

Take care so that the rear shock absorber does not fall over when pushing it down.

○Check that the piston rod [A] is slowly pushed back [B].

○Adjust the rebound damping adjuster [C] to the softest position. By doing that the piston rod is pushed back quickly.

★If the rear shock absorber does not work as above, change the rear shock absorber oil again.

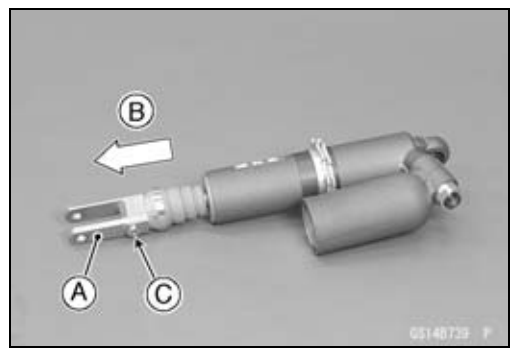

- Install the spring and spring guide (see Spring Replacement in the Suspension chapter).
- Install the rear shock absorber (see Rear Shock Absorber Installation in the Suspension chapter).
- Adjust spring preload (see Spring Preload Adjustment in the Suspension chapter).
- Install the removed parts (see appropriate chapters).

Swingarm and Uni-Trak Linkage Inspection

- Check the uni-trak component parts for wear periodically, or whenever excessive play is suspected.
- Using the jack under the frame, raise the rear wheel off the ground.

Special Tools - Jack: 57001-1238
Jack Attachment: 57001-1608

- Pump the seat down and up [A] 4 or 5 times, and inspect the smooth stroke.

★If the uni-trak linkage does not smooth stroke or noise is found, inspect the uni-trak linkage bearings.

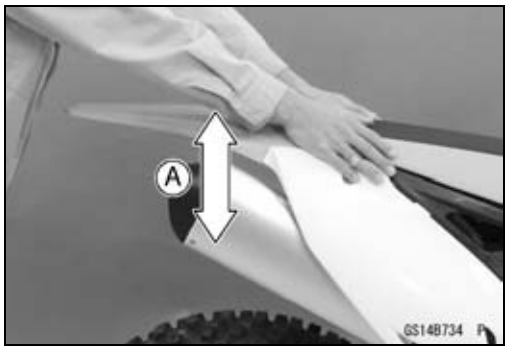

- Push and pull on the swingarm [A] to check for wear.

★A small amount of play on the swingarm is normal and no corrective action is needed. However, if excessive play is felt, remove the uni-trak parts from the frame and check for wear.

Swingarm and Uni-Trak Linkage Pivot Lubrication

- Refer to the Swingarm Bearing Installation and Rocker Arm Bearing Installation in the Suspension chapter.

Steering

Steering Inspection

- Using the jack, raise the front wheel off the ground.

Special Tools - Jack: 57001-1238
Jack Attachment: 57001-1608

- With the front wheel pointing straight ahead, alternately nudge each end of the handlebar.

○The front wheel should swing fully to left and right from the force of gravity until the fork hits the stop.

★If the steering binds or catches before the stop, check the routing of the cables, hoses, and harnesses.

★If the steering feels tight, adjust or lubricate the steering.

- Feel for steering looseness by pushing and pulling [A] the forks.

★If you feel looseness, adjust the steering.

Steering Adjustment

- Using the jack, raise the front wheel off the ground.

Special Tools - Jack: 57001-1238
Jack Attachment: 57001-1608

Periodic Maintenance Procedures

- Remove:
  Number Plate (see Number Plate Removal in the Frame chapter)
  Handlebar Pad [A]

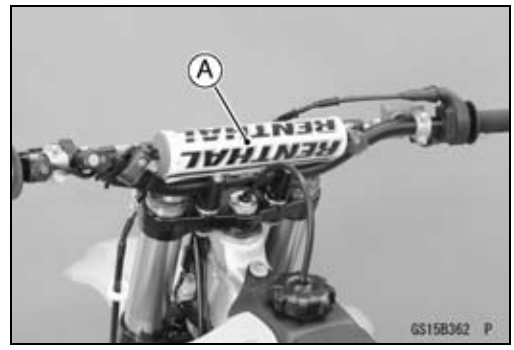

- Remove:
  Handlebar Clamp Bolts [A]
  Handlebar Clamps [B]
  Handlebar [C]

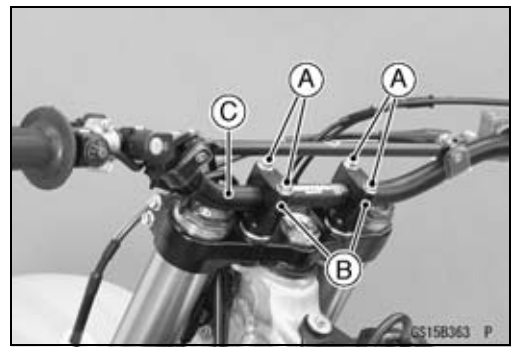

- Loosen the front fork clamp bolts (upper) [A] on both sides.
- Remove the steering stem head nut [B] and washer [C].
- Remove the steering stem head [D].

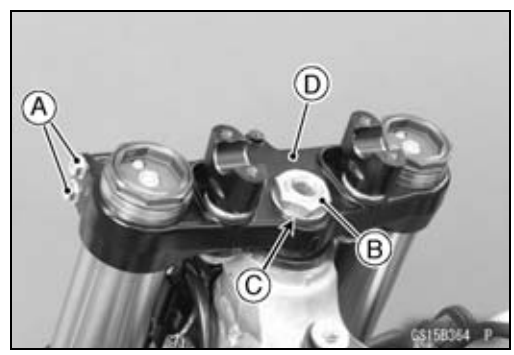

- Turn the steering stem nut [A] with the steering stem nut wrench [B] to obtain the proper adjustment.

★If the steering is too tight, loosen the stem nut a fraction of a turn; if the steering is too loose, tighten the nut a fraction of a turn.

Special Tool - Steering Stem Nut Wrench: 57001-1100

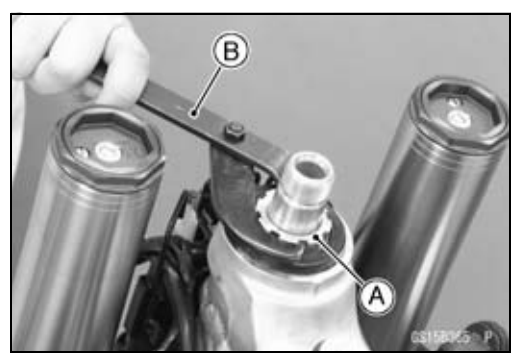

NOTE

○*Turn the nut 1/8 turn at a time maximum.*

- Install the steering stem head and washer.
- Tighten:

Torque - Steering Stem Head Nut: 98 N·m (10 kgf·m, 72 ft·lb)
Front Fork Clamp Bolts (Upper): 20 N·m (2.0 kgf·m, 15 ft·lb)

NOTE

○*Tighten the two clamp bolts alternately two times to ensure even tightening torque.*

- Check the steering again.

★If the steering is too tight or too loose, repeat the adjustment as mentioned above.

- Install the removed parts (see appropriate chapters).

Steering Stem Bearing Lubrication

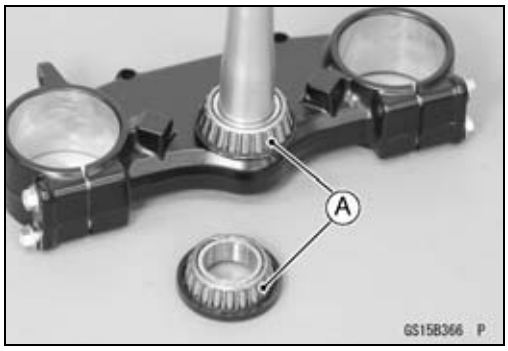

- Remove the steering stem (see Steering Stem, Stem Bearing Removal in the Steering chapter).
- Using a high flash-point solvent, wash the upper and lower tapered rollers in the cages, and wipe the upper and lower outer races, which are press-fitted into the frame head pipe, clean off grease and dirt.
- Visually inspect the outer races and rollers.

★Replace the bearing assemblies if they show wear or damage.

- Pack the upper and lower tapered roller bearings [A] in the cages with grease, and apply a light coat of grease to the upper and lower outer races.
- Install the steering stem (see Steering Stem, Stem Bearing Installation in the Steering chapter).
- Adjust the steering (see Steering Adjustment).

Frame

Frame Inspection

- Clean the frame with steam cleaner.
- Visually inspect the frame and rear frame for cracks, dents, bending, or warp.

★If there is any damage to the frame, replace it.

⚠ WARNING

A repaired frame may fail in use, possibly causing an accident resulting in injury or death. If the frame is bent, dented, cracked, or warped, replace it.

Electrical System

Spark Plug Cleaning and Inspection

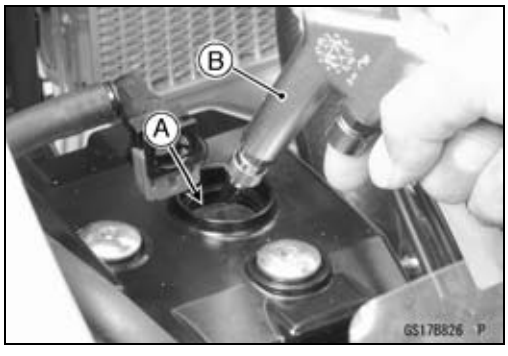

- Remove:
  Seat (see Seat Removal in the Frame chapter)
  Fuel Tank (see Fuel Tank Removal in the Fuel System (DFI) chapter)
  Spark Plug Cap
- Clean the plug hole [A], using the compressed air [B].

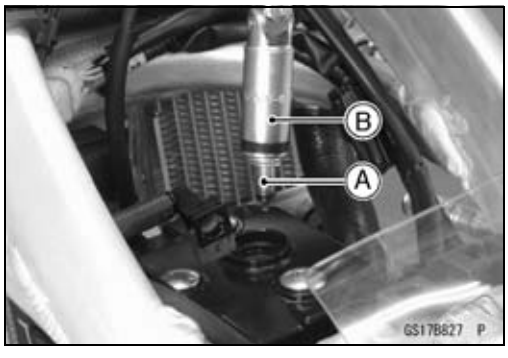

- Remove the spark plug [A], using the spark plug wrench.

  Special Tool - Spark Plug Wrench, Hex 16 [B]: 57001-1262

- The plug may also be cleaned using a high flash-point solvent and a nonmetal brush (nylon etc.).

★If the spark plug electrodes are corroded or damaged, or if the insulator is cracked, replace the plug. Use the standard spark plug.

Periodic Maintenance Procedures

- Measure the gap [A] with a wire-type thickness gauge.

★If the gap is incorrect, carefully bend the side electrode [B] with a suitable tool to obtain the correct gap.

Spark Plug Gap
Standard: 0.8 ~ 0.9 mm (0.03 ~ 0.04 in.)

- Install the spark plug, using the spark plug wrench.

Special Tool - Spark Plug Wrench, Hex 16: 57001-1262

- Tighten:

Torque - Spark Plug: 13 N·m (1.3 kgf·m, 115 in·lb)

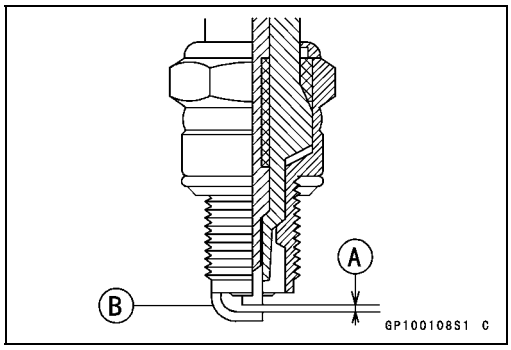

- Fit the spark plug cap [A] so that it is aligned with the line [B] on the cylinder head cover.
- Pull up the plug cap to make sure the installation of the spark plug cap.
- Install the removed parts (see appropriate chapters).

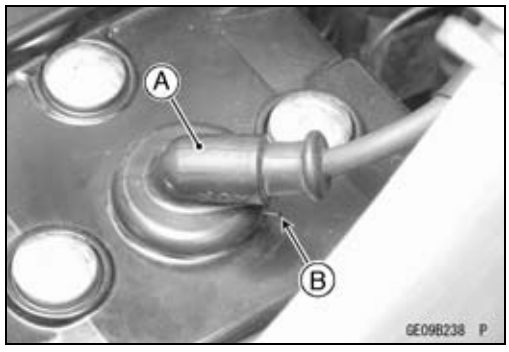

Spark Plug Replacement

- Refer to the Spark Plug Cleaning and Inspection.

General Lubrication and Cable Inspection

Lubrication

- Before lubricating each part, clean off any rusty spots with rust remover and wipe off any grease, oil, dirt, or grime.
- Lubricate the points listed below with indicated lubricant.

NOTE

○*Whenever the vehicle has been operated under wet or rainy conditions, or especially after using a high-pressure water spray, perform the general lubrication.*

Points: Lubricate with Grease.
Clutch Inner Cable Upper and Lower Ends [A]
Throttle Inner Cable Upper End
Brake Lever Pivot Bolt
Clutch Lever Pivot Bolt
Brake Pedal Bolt

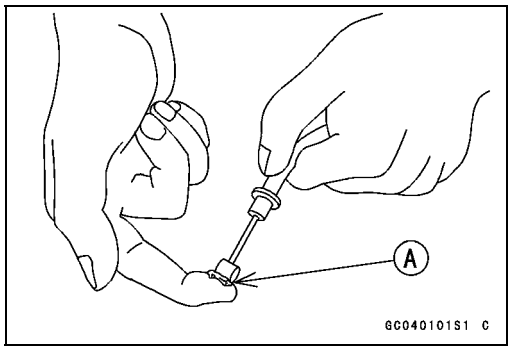

Cables: Lubricate with Rust Inhibitor.
Throttle Inner Cables
Clutch Inner Cable

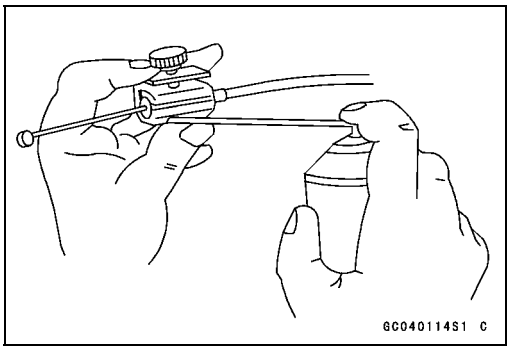

Pivots: Lubricate with engine oil.
Rear Master Cylinder Joint Pin

Cable Inspection

- With the cable disconnected at the both ends, the cable should move freely [A] within the cable housing.

★If cable movement is not free after lubricating, if the cable is frayed [B], or if the cable housing is kinked [C], replace the cable.

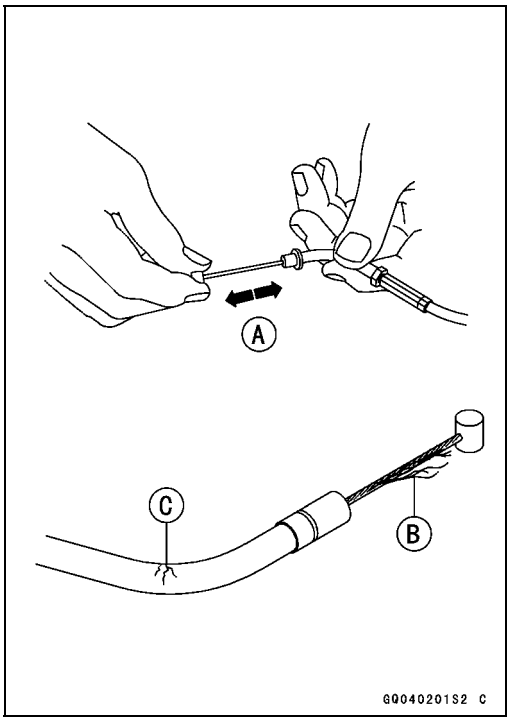

Nut, Bolt, and Fastener Tightness Inspection

Tightness Inspection

- Check the tightness of the bolts and nuts listed here in accordance with the Periodic Maintenance Chart. Also, check to see that each cotter pin is in place and in good condition.

NOTE

○*For the engine fasteners, check the tightness of them when the engine is cold (at room temperature).*

Periodic Maintenance Procedures

★If there are loose fasteners, retighten them to the specified torque following the specified tightening sequence. Refer to the Torque and Locking Agent section in this chapter for torque specifications. For each fastener, first loosen it by 1/2 turn, then tighten it.

★If cotter pins are damaged, replace them with new ones.

Nut, Bolt and Fastener to be checked

Wheels:
- Spoke Nipples
- Front Axle Nut
- Front Axle Clamp Bolts
- Rear Axle Nut Cotter Pin
- Rear Axle Nut

Final Drive:
- Chain Adjuster Locknut
- Rear Sprocket Nuts

Brakes:
- Front Master Cylinder Clamp Bolts
- Brake Lever Pivot Bolt Locknut
- Front Caliper Mounting Bolts
- Brake Pedal Bolt
- Rear Master Cylinder Push Rod Cotter Pin
- Rear Master Cylinder Mounting Bolts
- Rear Caliper Holder Shaft

Suspension:
- Front Fork Clamp Bolts
- Rear Shock Absorber Nuts
- Swingarm Pivot Shaft Nut
- Uni-Trak Link Nuts

Steering:
- Steering Stem Head Nut
- Handlebar Clamp Bolts

Engine:
- Throttle Cable Adjuster Locknut(s)
- Engine Mounting Bolts, Nuts
- Engine Bracket Bolts, Nuts
- Shift Pedal Bolt
- Muffler Mounting Bolts
- Exhaust Pipe Holder Nuts
- Muffler Pipe Clamp Bolt
- Clutch Cable Adjuster Locknut
- Clutch Lever Pivot Bolt Locknut
- Kick Pedal Bolt

Others:
- Footpeg Cotter Pins
- Rear Frame Mounting Bolts
- Front Fender Bolts

Fuel System (DFI)

Table of Contents

Exploded View 3-4
Specifications 3-8
Special Tools and Sealant 3-9
DFI System 3-10
DFI Parts Location 3-13
DFI Servicing Precautions 3-15
  DFI Servicing Precautions 3-15
Troubleshooting the DFI System 3-16
    Outline 3-16
  Inquiries to Rider 3-19
DFI System Troubleshooting Guide 3-21
Self-Diagnosis 3-25
    Self-diagnosis Outline 3-25
    Self-diagnosis Procedures 3-25
    How to Read Service Codes 3-28
    How to Erase Service Codes 3-28
    Service Code Table 3-29
    Backups 3-30
Throttle Sensor (Service Code 11) 3-31
    Throttle Sensor Replacement 3-31
    Throttle Sensor Input Voltage Inspection 3-33
    Throttle Sensor Output Voltage Inspection 3-34
    Throttle Sensor Resistance Inspection 3-35
Intake Air Pressure Sensor (Service Code 12) 3-37
    Intake Air Pressure Sensor Removal 3-37
    Intake Air Pressure Sensor Installation 3-37
    Intake Air Pressure Sensor Input Voltage Inspection 3-38
    Intake Air Pressure Sensor Output Voltage Inspection 3-39
Intake Air Temperature Sensor (Service Code 13) 3-43
    Intake Air Temperature Sensor Removal/Installation 3-43
    Intake Air Temperature Sensor Output Voltage Inspection 3-43
    Intake Air Temperature Sensor Resistance Inspection 3-44
Water Temperature Sensor (Service Code 14) 3-46
    Water Temperature Sensor Removal/Installation 3-46
    Water Temperature Sensor Output Voltage Inspection 3-46
    Water Temperature Sensor Resistance Inspection 3-48
Crankshaft Sensor (Service Code 21) 3-49
    Crankshaft Sensor Removal/Installation 3-49
    Crankshaft Sensor Resistance Inspection 3-49
    Crankshaft Sensor Peak Voltage Inspection 3-49
Gear Position Switch (Service Code 25) 3-50
    Gear Position Switch Removal 3-50
    Gear Position Switch Installation 3-50
    Gear Position Switch Inspection 3-51
Vehicle-down Sensor (Service Code 31) 3-52
    Vehicle-down Sensor Removal 3-52
    Vehicle-down Sensor Installation 3-52
    Vehicle-down Sensor Input Voltage Inspection 3-52
    Vehicle-down Sensor Output Voltage Inspection 3-53
Fuel Injector (Service Code 41) 3-55

Fuel Injector Removal 3-55
Fuel Injector Installation 3-55
Fuel Injector Audible Inspection 3-56
Fuel Injector Resistance Inspection 3-57
Fuel Injector Power Supply Voltage Inspection 3-57
Fuel Injector Output Voltage Inspection 3-58
Injector Fuel Line Inspection 3-58
Fuel Pump (Service Code 46) 3-60
Fuel Pump Removal 3-60
Fuel Pump Installation 3-60
Fuel Pump Operation Inspection 3-61
Fuel Pump Operating Voltage Inspection 3-61
Pressure Regulator Removal 3-62
Fuel Filter Cleaning 3-62
Ignition Coil (Service Code 51) 3-63
Ignition Coil Removal/Installation 3-63
Ignition Coil Primary Peak Voltage Inspection 3-63
Orange FI Warning Indicator Light (LED) 3-64
Orange FI Warning Indicator Light (LED) Inspection 3-64
ECU 3-66
ECU Identification 3-66
ECU Removal 3-66
ECU Installation 3-66
ECU Power Supply Inspection 3-67
Fuel Line 3-69
Fuel Pressure Inspection 3-69
Fuel Flow Rate Inspection 3-70
Throttle Grip and Cable 3-72
Throttle Grip (Throttle Cable) Free Play Inspection 3-72
Throttle Grip (Throttle Cable) Free Play Adjustment 3-72
Throttle Cable Replacement 3-72
Throttle Cable Lubrication 3-73
Throttle Cable Inspection 3-73
Throttle Body Assy 3-74
Idle Speed Inspection 3-74
Throttle Bore Cleaning 3-74
Throttle Body Assy Removal 3-74
Throttle Body Assy Installation 3-75
Throttle Body Assy Disassembly 3-76
Throttle Body Assy Assembly 3-77
Air Cleaner 3-79
Air Cleaner Housing Removal 3-79
Air Cleaner Housing Installation 3-79
Element Removal/Installation 3-79
Element Cleaning and Inspection 3-79
Fuel Tank 3-80
Fuel Tank Removal 3-80
Fuel Tank Installation 3-82
Fuel Tank Cleaning 3-83

This page intentionally left blank.

Exploded View

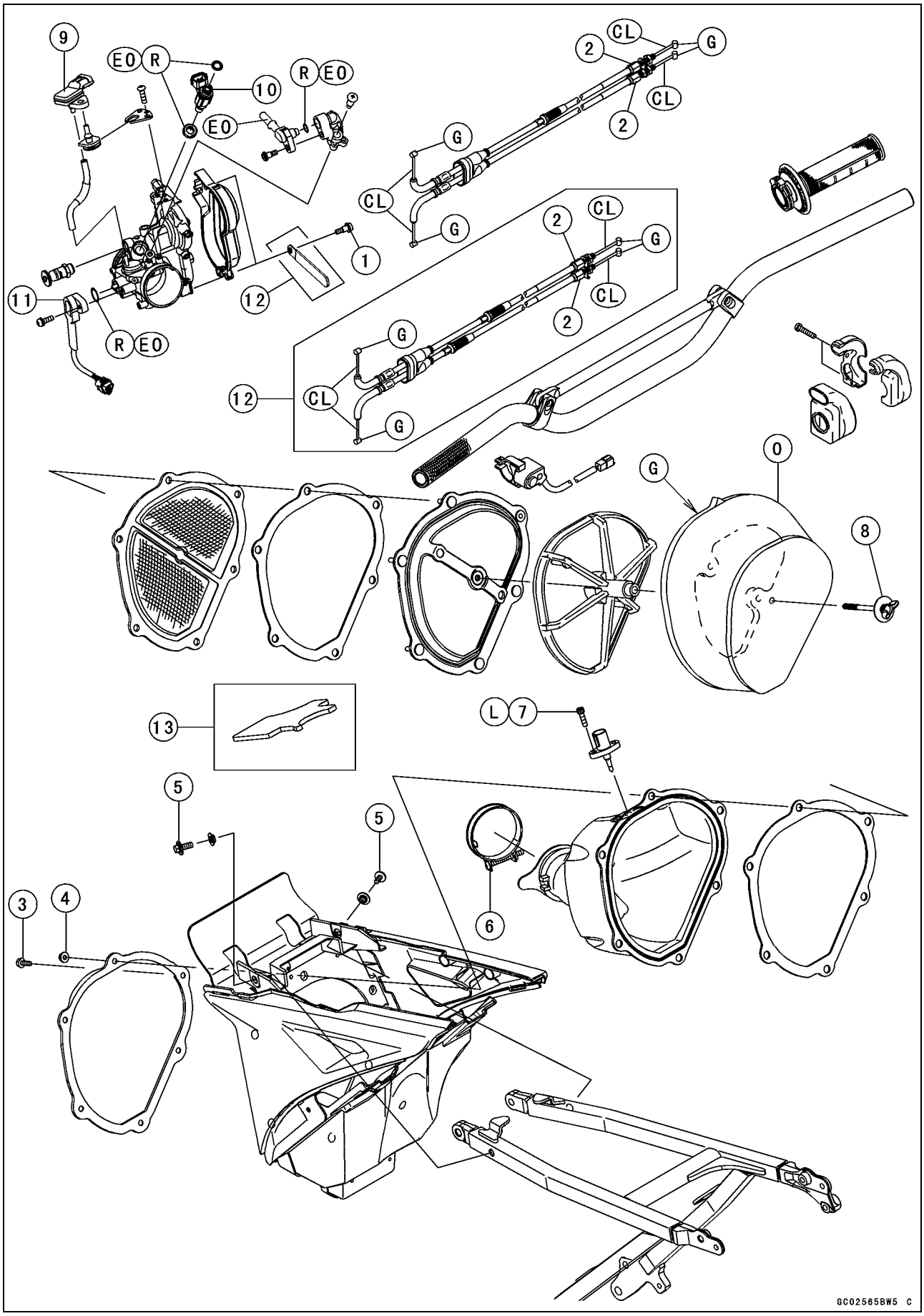

Exploded View

No.	Fastener	Torque			Remarks
		N·m	kgf·m	ft·lb	
1	Throttle Pulley Cover Bolts	3.4	0.35	30 in·lb	
2	Throttle Cable Mounting Bolts	3.5	0.36	31 in·lb	
3	Air Cleaner Duct Mounting Bolt	3.0	0.31	27 in·lb	
4	Air Cleaner Duct Mounting Nuts	3.0	0.31	27 in·lb	
5	Air Cleaner Housing Bolts	9.8	1.0	87 in·lb	
6	Air Cleaner Duct Clamp Screw	2.0	0.20	18 in·lb	
7	Intake Air Temperature Sensor Bolts	4.15	0.423	37 in·lb	L
8	Air Cleaner Element Wing Bolt	–	–	–	Hand-tighten

9. Intake Air Pressure Sensor
10. Fuel Injector
11. Throttle Sensor
12. KX450FC
13. Other than KX450FC and KX450FD ~ US, CA Models

CL: Apply cable lubricant.
EO: Apply engine oil.
G: Apply grease.
L: Apply a non-permanent locking agent.
O: Apply high-quality foam air filter oil.
R: Replacement Parts

Exploded View

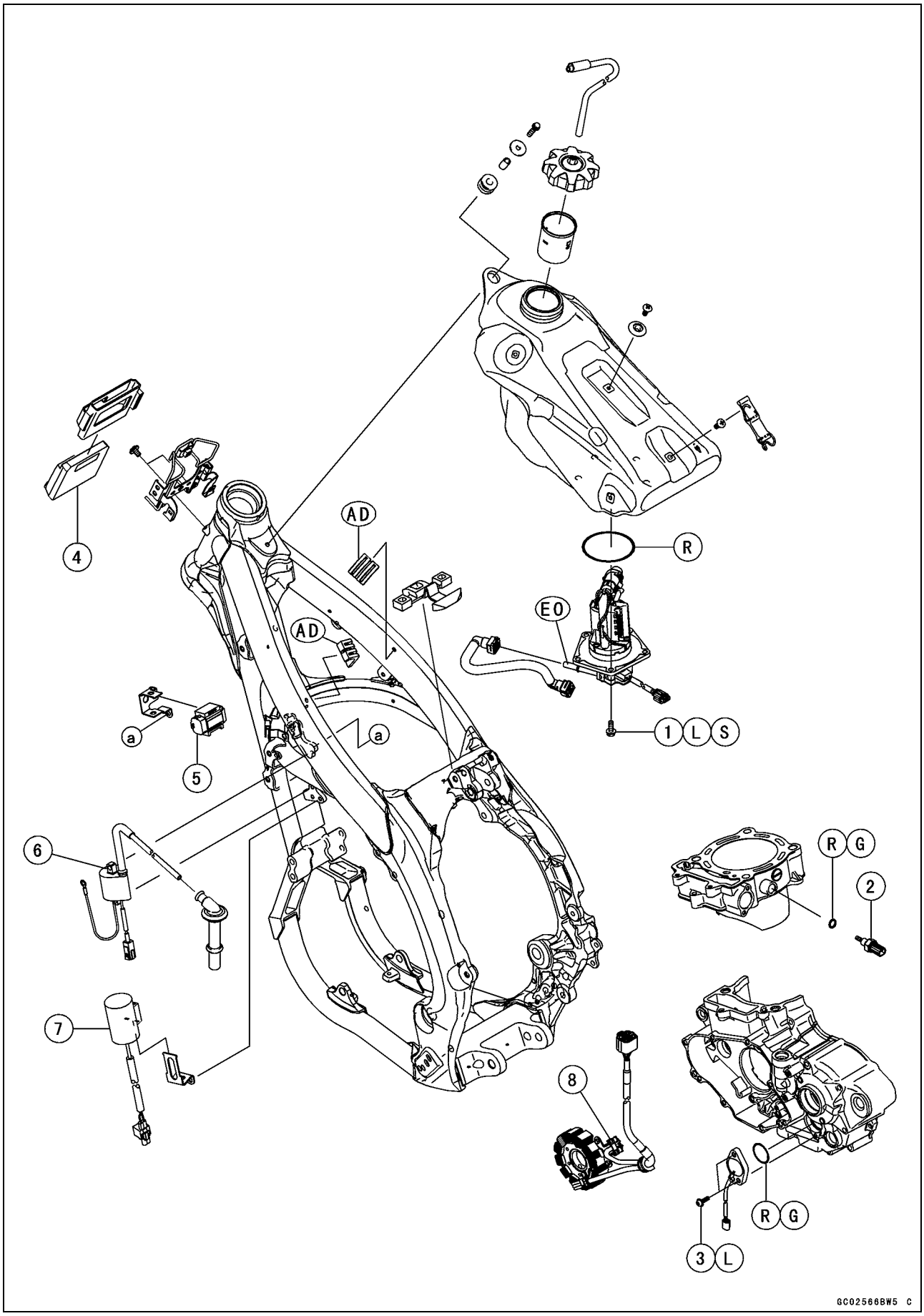

Exploded View

No.	Fastener	Torque			Remarks
		N·m	kgf·m	ft·lb	
1	Fuel Pump Bolts	9.8	1.0	87 in·lb	L, S
2	Water Temperature Sensor	12	1.2	106 in·lb	
3	Gear Position Switch Screws	2.9	0.30	26 in·lb	L

4. ECU
5. Vehicle-down Sensor
6. Ignition Coil
7. Capacitor
8. Crankshaft Sensor

AD: Apply adhesive.
EO: Apply engine oil.
G: Apply grease.
S: Follow the specified tightening sequence.
L: Apply a non-permanent locking agent.
R: Replacement Parts

Specifications

Item	Standard
Digital Fuel Injection System	
Idle Speed	2 000 ±50 r/min (rpm)
Throttle Body Assy:	
Throttle Valve	Single throttle valve
Bore	ϕ43 mm (1.69 in.)
ECU:	
Make	KEIHIN
Type	Digital memory type, with built in IC igniter, sealed with resin
Fuel Pressure	294 kPa (3.0 kgf/cm², 43 psi) at engine idling
Fuel Pump:	
Type	Wesco pump
Discharge	40 mL (1.4 US oz.) or more for 5 seconds
Fuel Injector:	
Type	INP-286
Nozzle Type	Fine atomizing type with 10 holes
Resistance	About 11.7 ~ 12.3 Ω at 20°C (68°F)
Throttle Sensor:	
Input Voltage	DC 4.75 ~ 5.25 V
Output Voltage	DC 0.58 ~ 0.62 V at idle throttle opening
	DC 3.68 ~ 3.88 V at full throttle opening (for reference)
Resistance	4 ~ 6 kΩ
Intake Air Pressure Sensor:	
Input Voltage	DC 4.75 ~ 5.25 V
Output Voltage	DC 3.80 ~ 4.20 V at standard atmospheric pressure (see text for details)
Intake Air Temperature Sensor:	
Output Voltage	About DC 2.28 ~ 3.43 V at intake air temperature 20°C (68°F)
Resistance	909 ~ 1 363 Ω at 40°C (104°F)
	124 ~ 186 Ω at 100°C (212°F)
Water Temperature Sensor:	
Output Voltage	About DC 2.80 ~ 2.97 V at water temperature 20°C (68°F)
Resistance	see text
Gear Position Switch:	
Resistance	see text
Vehicle-down Sensor:	
Detection Angle	More than 55 ~ 75° for each bank
Input Voltage	DC 4.75 ~ 5.25 V
Output Voltage	With sensor tilted 55 ~ 75° or more right or left: DC 3.7 ~ 4.4 V
	With sensor arrow mark pointed up: DC 0.4 ~ 1.4 V
Throttle Grip and Cables	
Throttle Grip Free Play	2 ~ 3 mm (0.08 ~ 0.12 in.)

Special Tools and Sealant

Oil Pressure Gauge, 5 kgf/cm²:
57001-125

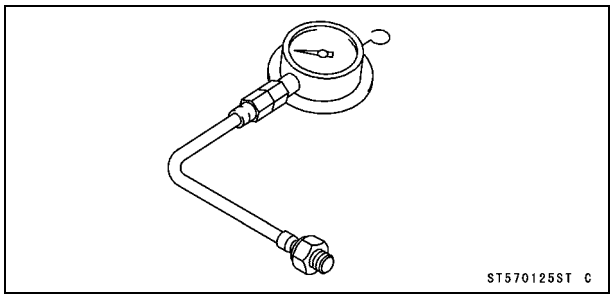

Fork Oil Level Gauge:
57001-1290

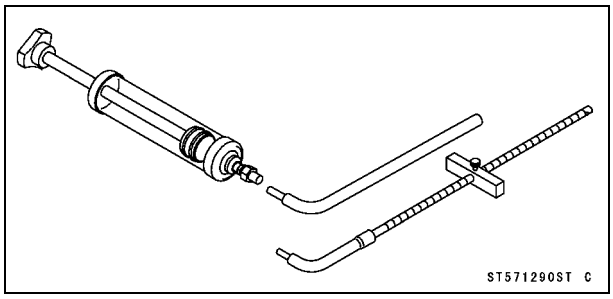

Vacuum Gauge:
57001-1369

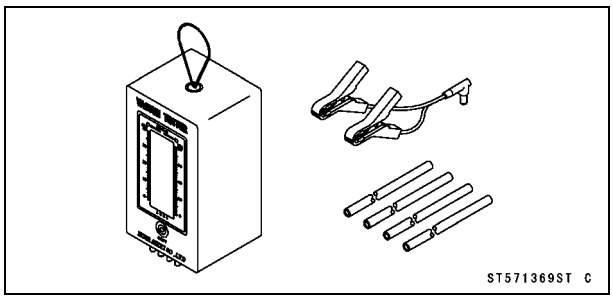

Filler Cap Driver:
57001-1454

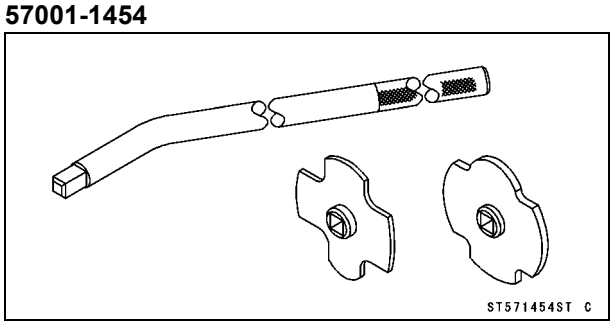

Needle Adapter Set:
57001-1457

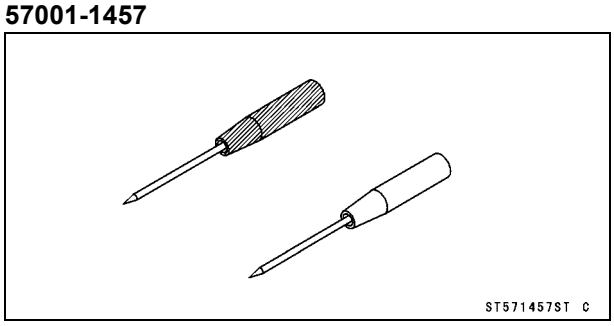

Fuel Pressure Gauge Adapter:
57001-1593

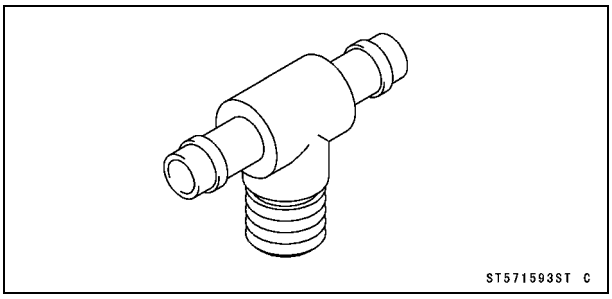

Fuel Hose:
57001-1607

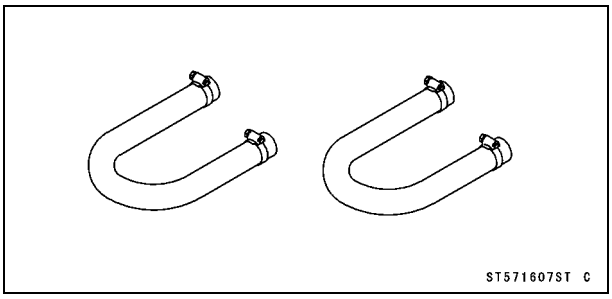

Measuring Adapter:
57001-1700

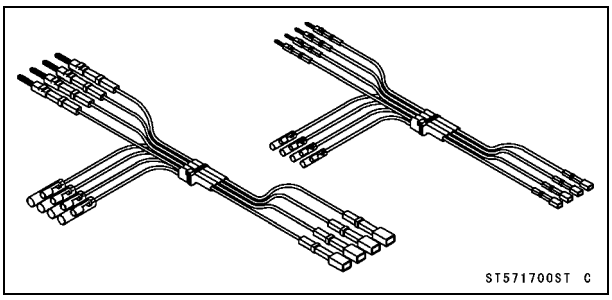

Liquid Gasket, TB1211:
56019-120

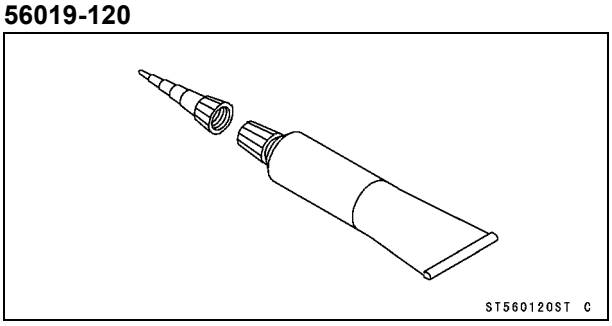

DFI System

DFI System

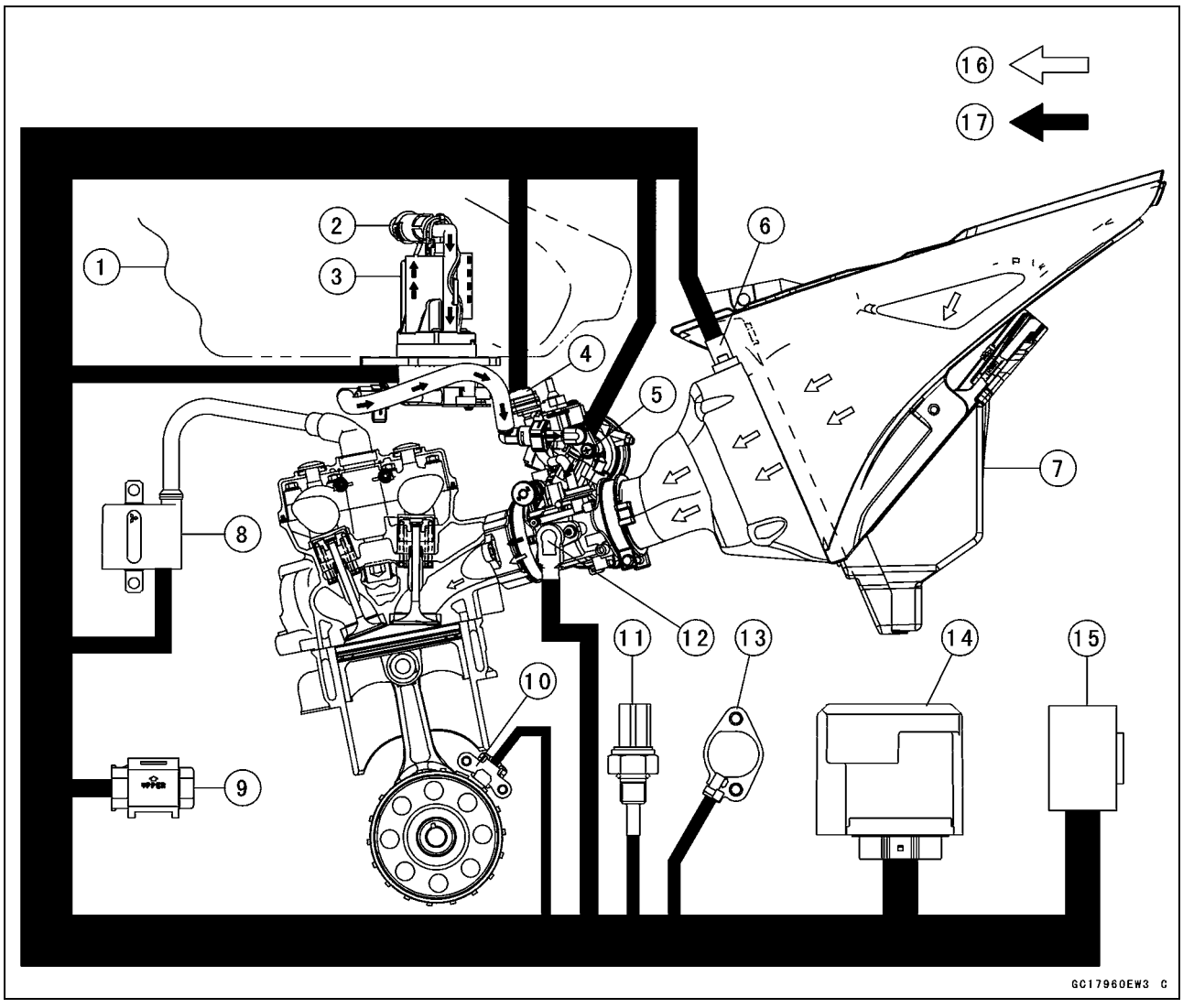

1. Fuel Tank
2. Pressure Regulator
3. Fuel Pump
4. Intake Air Pressure Sensor
5. Fuel Injector
6. Intake Air Temperature Sensor
7. Air Cleaner Housing
8. Ignition Coil
9. Vehicle-down Sensor
10. Crankshaft Sensor
11. Water Temperature Sensor
12. Throttle Sensor
13. Gear Position Switch
14. ECU
15. Capacitor
16. Air Flow
17. Fuel Flow

DFI System

DFI System Wiring Diagram

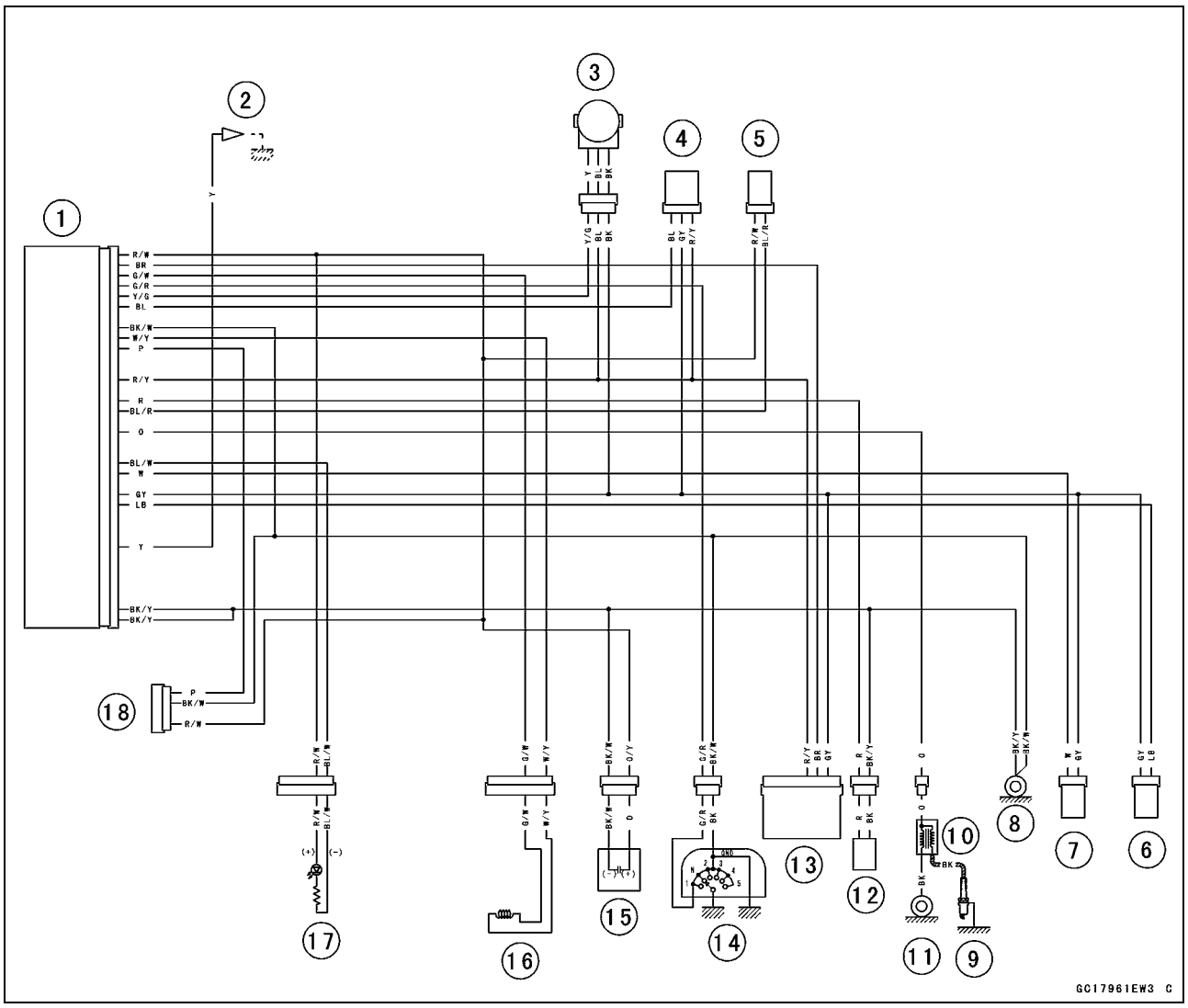

Part Names

1. ECU
2. Self-diagnosis Terminal
3. Throttle Sensor
4. Intake Air Pressure Sensor
5. Fuel Injector
6. Intake Air Temperature Sensor
7. Water Temperature Sensor
8. Frame Ground 1
9. Spark Plug
10. Ignition Coil
11. Frame Ground 2
12. Fuel Pump
13. Vehicle-down Sensor
14. Gear Position Switch
15. Capacitor
16. Crankshaft Sensor
17. Orange Launch Control Mode/FI Warning Indicator Light (LED)
18. Kawasaki Diagnostic System Connector

○Color Codes:

BK: Black	GY: Gray	PU: Purple
BL: Blue	LB: Light Blue	R: Red
BR: Brown	LG: Light Green	V: Violet
CH: Chocolate	O: Orange	W: White
DG: Dark Green	P: Pink	Y: Yellow
G: Green		

DFI System

Terminal Numbers of ECU Connectors

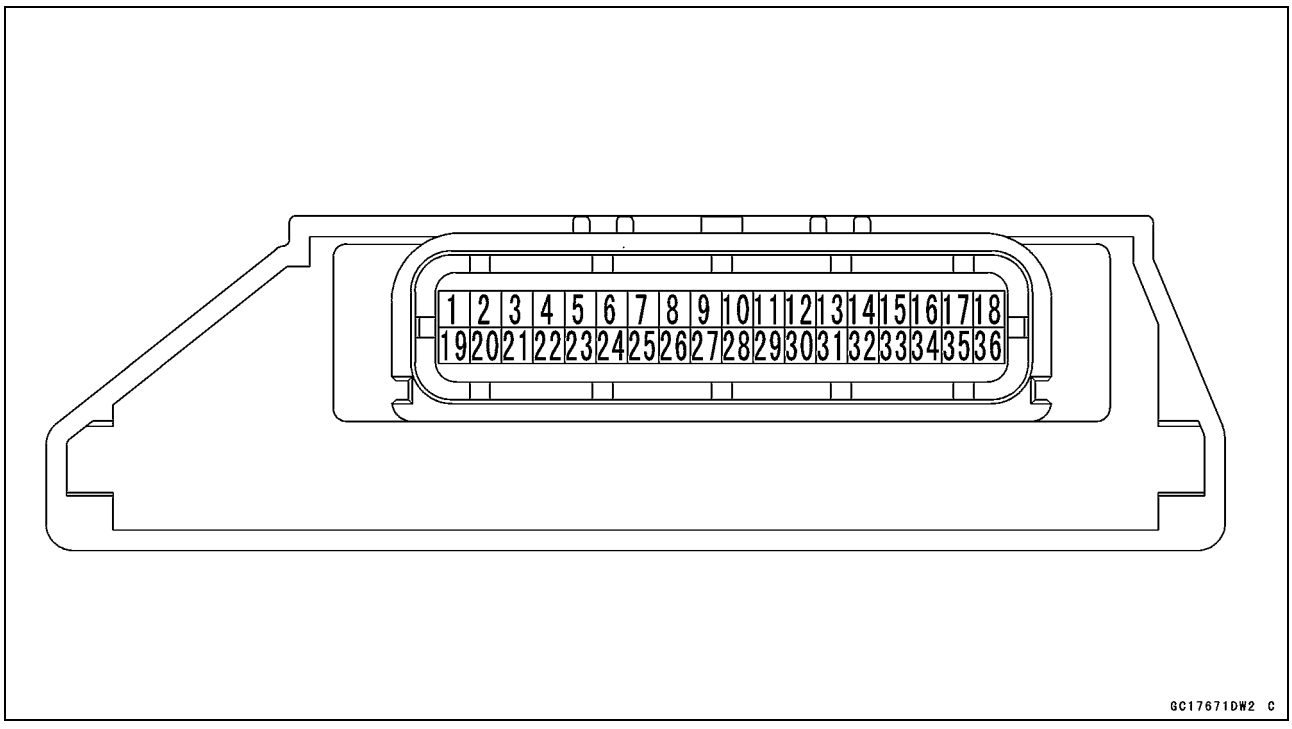

Terminal Names

1. Power Supply to ECU
2. Vehicle-down Sensor
3. Crankshaft Sensor (+)
4. Gear Position Switch
5. Throttle Sensor
6. Intake Air Pressure Sensor
7. Unused
8. Ground for Control System
9. Crankshaft Sensor (–)
10. External Communication Line (*KDS)
11. Unused
12. Launch Control Mode Button
13. Power Supply to Sensors
14. Fuel Pump Power Supply Voltage
15. Fuel Pump
16. Fuel Injector
17. Unused
18. Ignition Coil
19. Unused
20. Unused
21. Orange Launch Control Mode/FI Warning Indicator Light (LED)
22. Water Temperature Sensor
23. DFI Setting Data Selection 1
24. Ground for Sensors
25. Intake Air Temperature Sensor
26. DFI Setting Data Selection 2
27. Unused
28. Unused
29. Self-diagnosis Terminal
30. Unused
31. External Communication Line
32. External Communication Line
33. Unused
34. Engine Stop Switch
35. Ground for ECU
36. Ground for ECU

*: KDS (Kawasaki Diagnostic System)

DFI Parts Location

Kawasaki Diagnostic System Connector [1]
ECU [2]
Self-diagnosis Terminal [3]

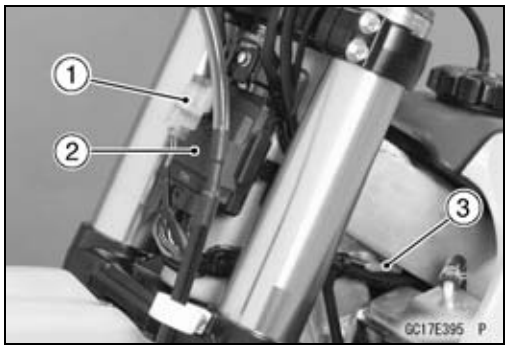

Orange Launch Control Mode/FI Warning Indicator Light (LED) [4]

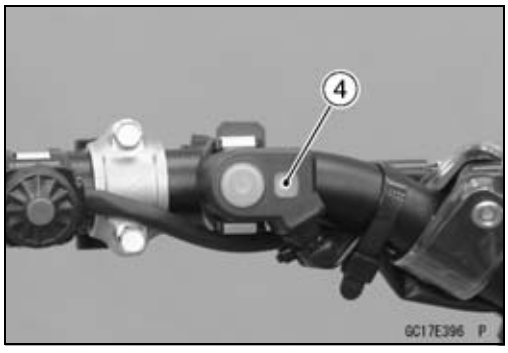

Water Temperature Sensor [5]
Crankshaft Sensor [6]

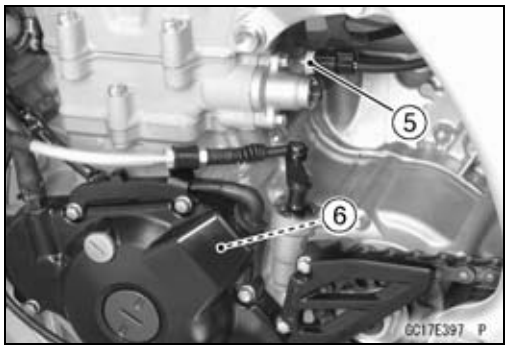

Capacitor [7]
Vehicle-down Sensor [8]
Ignition Coil [9]

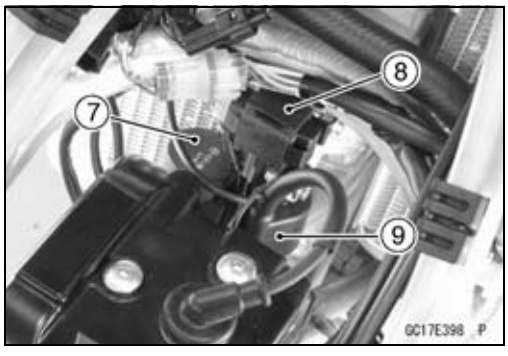

Intake Air Pressure Sensor [10]
Fuel Pump [11]

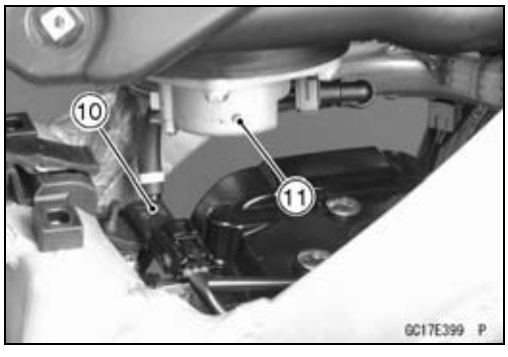

DFI Parts Location

Fuel Injector [12]
Throttle Sensor [13]
Throttle Body Assy [14]

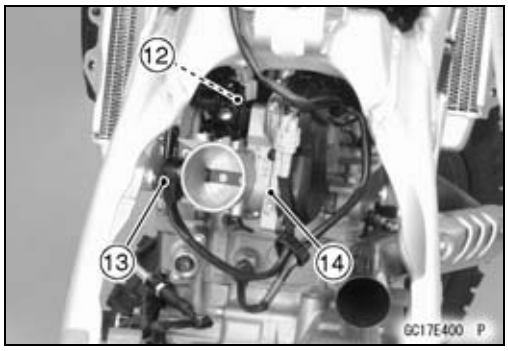

Intake Air Temperature Sensor [15]

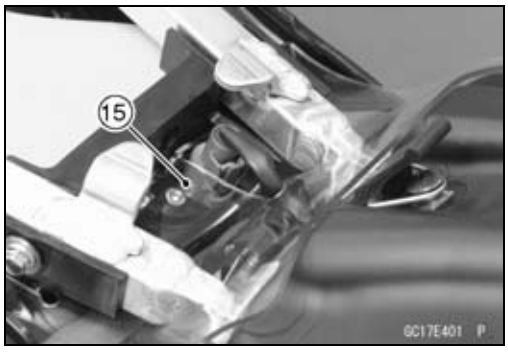

DFI Servicing Precautions

DFI Servicing Precautions

There are a number of important precautions that should be followed servicing the DFI system.

○Connect these connectors until they click [A].
○Never any of the DFI electrical connectors are disconnected. The ECU memorizes service codes.

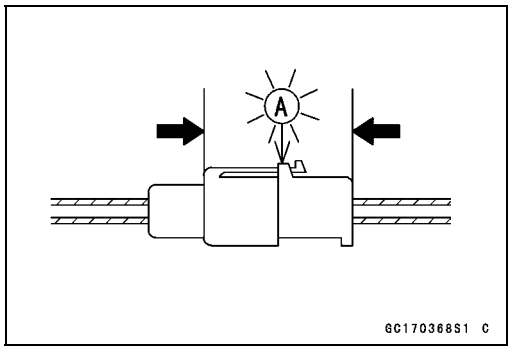

○Do not spray water on the electrical parts, DFI parts, connectors, leads and wiring.
○When the fuel hose is disconnected, do not start the engine. The fuel pump will operate and fuel will spout from the fuel hose.
○Do not operate the fuel pump if it is completely dry. This is to prevent pump seizure.
○Before removing the fuel system parts, blow the outer surfaces of these parts clean with compressed air.
○When the fuel hose is disconnected, fuel may spout out by residual pressure in the fuel line. Cover the hose joint with a piece of clean cloth to prevent fuel spillage.
○When installing the fuel hose, avoid sharp bending, kinking, flattening or twisting, and run the fuel hose with a minimum of bending so that the fuel flow will not be obstructed.
○Run the hose according to the Cable, Wire, and Hose Routing section in the Appendix chapter.
○To prevent corrosion and deposition in the fuel system, do not add any fuel antifreeze chemicals to fuel.

○If the motorcycle is not properly handled, the high pressure inside the fuel line can cause fuel to leak or the hose to burst. Remove the fuel tank (see Fuel Tank Removal) and check the fuel hose [A].
★Replace the fuel hose if any fraying, cracks or bulges are noticed.

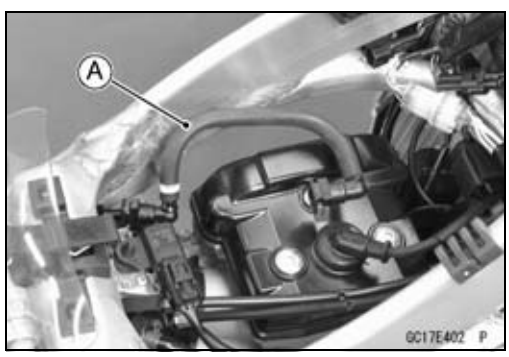

○To maintain the correct fuel/air mixture (F/A), there must be no intake air leaks in the DFI system. Be sure to install the oil filler plug [A] after filling the engine oil.

Special Tool - Filler Cap Driver: 57001-1454

Torque - Oil Filler Plug: 3.5 N·m (0.36 kgf·m, 31 in·lb)

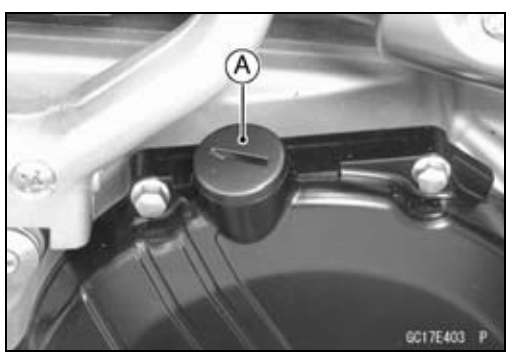

Troubleshooting the DFI System

Outline

When an abnormality in the system occurs, the orange FI warning indicator light (LED) goes on to alert the rider. In addition, the condition of the problem is stored in the memory of the ECU (Electronic Control Unit). With the engine stopped and turned in the self-diagnosis mode, the service code [A] is indicated by the number of times the orange FI warning indicator light (LED) blinks.

When due to a malfunction, the orange FI warning indicator light (LED) remains lit, ask the rider about the conditions [B] under which the problem occurred and try to determine the cause [C].

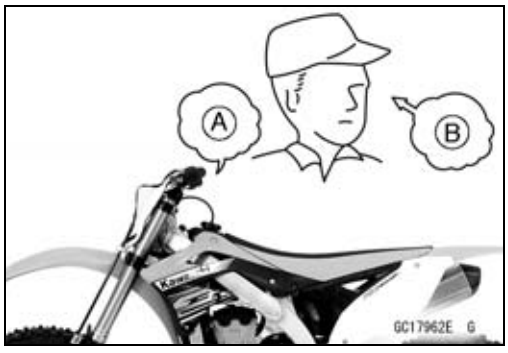

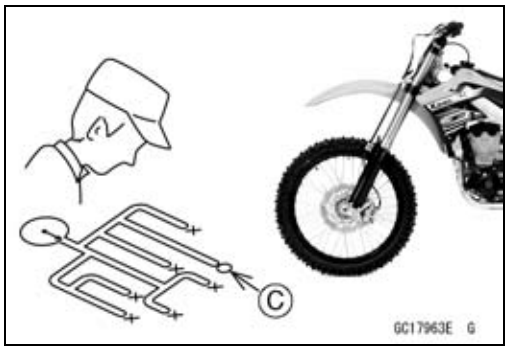

- First, conduct a self-diagnosis inspection and then a non-self-diagnosis inspection. The non-self-diagnosis items are not indicated by the orange FI warning indicator light (LED). Don't rely solely on the DFI self-diagnosis function, use common sense.

★If the orange FI warning indicator light (LED) goes on by kicking the kick pedal about 10 times, these parts are broken.

Even when the DFI system is operating normally, the orange FI warning indicator light (LED) may light up under strong electrical interference. No repair needed.

When the orange FI warning indicator light (LED) goes on and the motorcycle is brought in for repair, check the service codes.

When the repair has been done, the light doesn't go on. But the service codes stored in memory are not erased to preserve the problem history, and the light can display the codes in the self-diagnosis mode. The problem history is referred when solving unstable problems.

Much of the DFI system troubleshooting work consists of confirming continuity of the wiring. The DFI parts are assembled and adjusted with precision, and it is impossible to disassemble or repair them.

Troubleshooting the DFI System

- When checking the DFI parts, use a digital meter which can be read two decimal place voltage or resistance.

○The DFI part connectors [A] have seals [B], including the ECU. When measuring the input or output voltage with the connector joined, use the needle adapter set [C]. Insert the needle adapter inside the seal until the needle adapter reaches the terminal.

Special Tool - Needle Adapter Set: 57001-1457

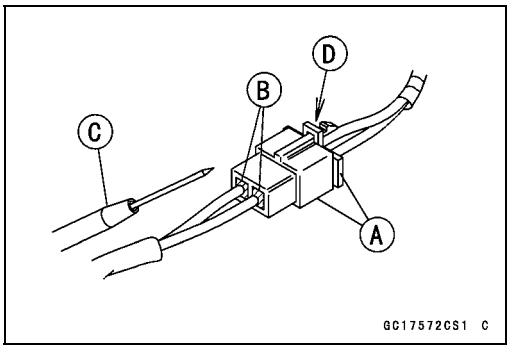

NOTICE
Insert the needle adapter straight along the terminal in the connector to prevent short-circuit between terminals.

- Make sure that measuring points are correct in the connector, noting the position of the lock [D] and the lead color before measurement. Do not reverse connections of a digital meter.
- Be careful not to short-circuit the leads of the DFI or electrical system parts by contact between adapters.
- Connect the power supply harness (option P/No. 26011 -0246) and the battery to the capacitor lead connector, and measure the voltage with the connector joined.

NOTICE
Incorrect, reverse connection or short circuit by needle adapters could damage the DFI or electrical system parts.

○After measurement, remove the needle adapters and apply sealant to the seals [A] of the connector [B] for waterproofing.

Sealant - Liquid Gasket, TB1211: 56019-120

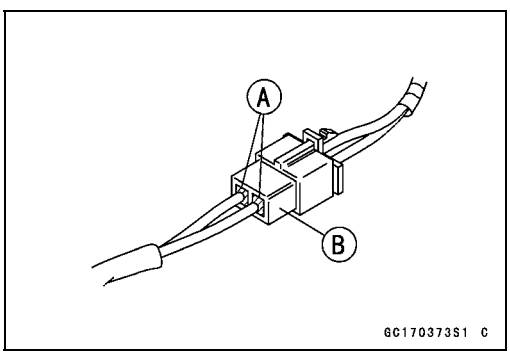

- Always check the connected battery condition before replacing the DFI parts. A fully charged battery is a must for conducting accurate tests of the DFI system.
- Trouble may involve one or in some cases all items. Never replace a defective part without determining what CAUSED the problem. If the problem was caused by some other item or items, they too must be repaired or replaced, or the new replacement part will soon fail again.
- Measure coil winding resistance when the DFI part is cold (at room temperature).
- Make sure all connectors in the circuit are clean and tight, and examine leads for signs of burning, fraying, short, etc. Deteriorated leads and bad connections can cause reappearance of problems and unstable operation of the DFI system.

★If any wiring is deteriorated, replace the wiring.

Troubleshooting the DFI System

- Pull each connectors [A] apart and inspect it for corrosion, dirt, and damage.

★If the connector is corroded or dirty, clean it carefully. If it is damaged, replace it. Connect them securely.

- Check the wiring for continuity.

○Use the wiring diagram to find the ends of the lead which is suspected of being a problem.

○Connect a digital meter between the ends of the leads.

○Set the digital meter, and read the digital meter.

★If the tester does not read 0 Ω, the lead is defective. Replace the lead or the main harness.

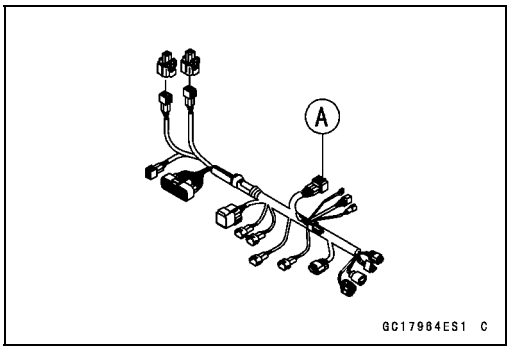

○If both ends of a harness [A] are far apart, ground [B] the one end [C], using a jumper lead [D] and check the continuity between the end [E] and the ground [F]. This enables to check a long harness for continuity. If the harness is open, repair or replace the harness.

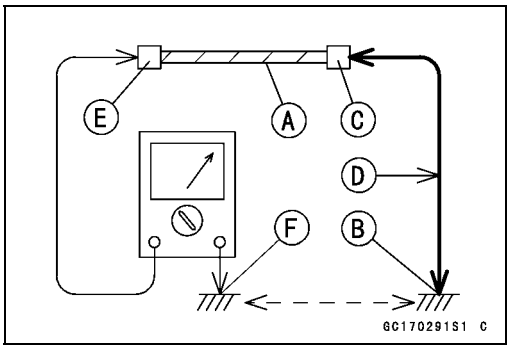

○When checking a harness [A] for short circuit, open one end [B] and check the continuity between the other end [C] and ground [D]. If there is continuity, the harness has a short circuit to ground, and it must be repaired or replaced.

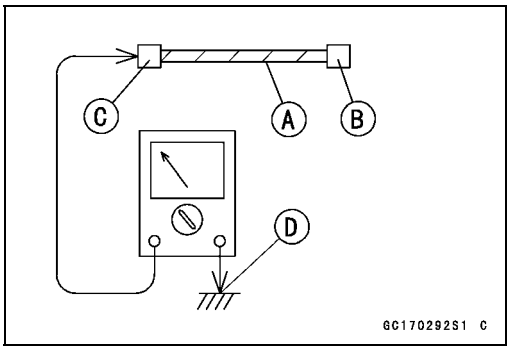

- Narrow down suspicious locations by repeating the continuity tests from the ECU connectors.

★If no abnormality is found in the wiring or connectors, the DFI parts are the next likely suspects. Check the part, starting with input and output voltages. However, there is no way to check the ECU itself.

★If an abnormality is found, replace the affected DFI part.

★If no abnormality is found in the wiring, connectors, and DFI parts, replace the ECU.

Troubleshooting the DFI System

DFI Diagnosis Flow Chart

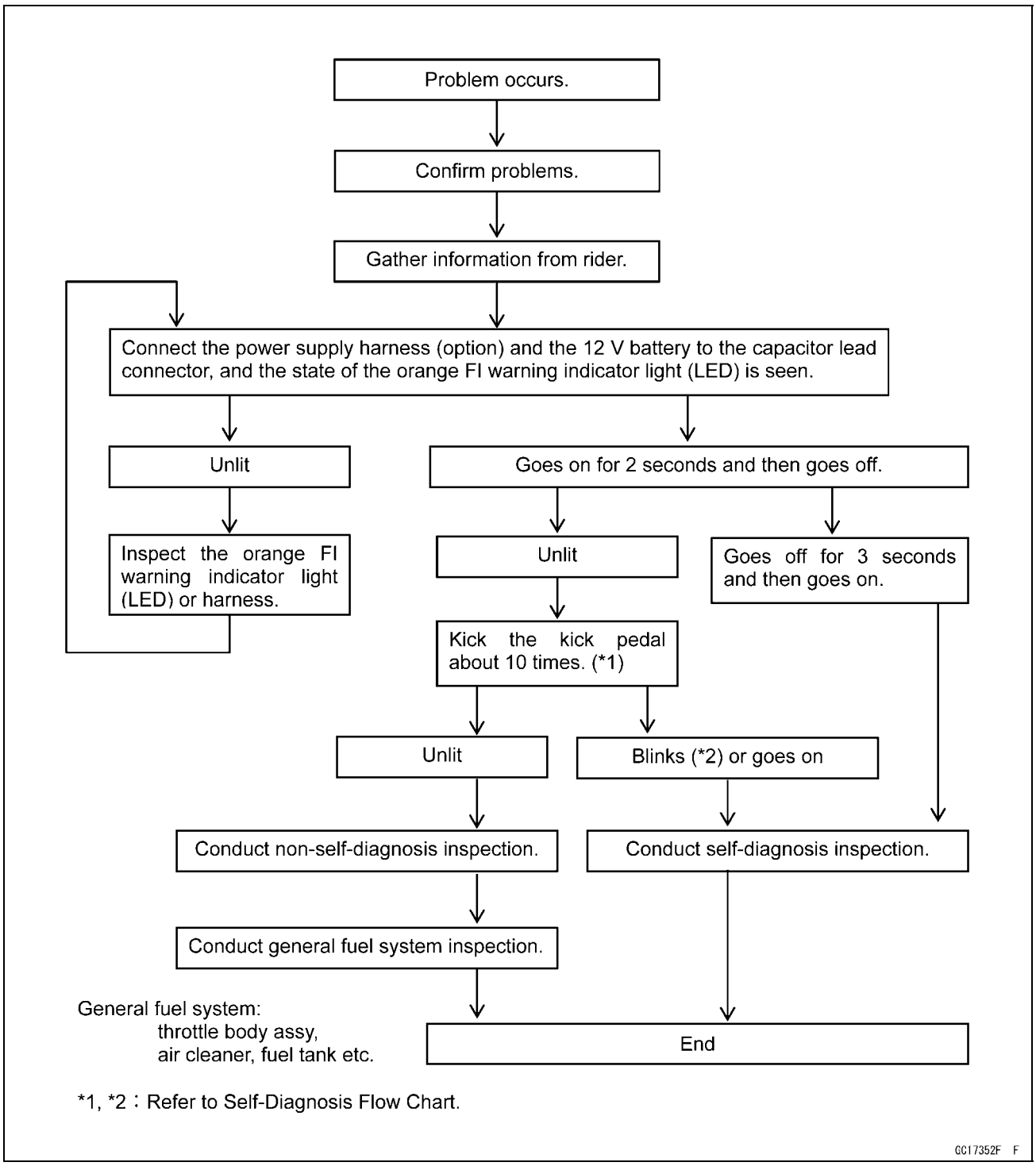

Inquiries to Rider

○Each rider reacts to problems in different ways, so it is important to confirm what kind of symptoms the rider has encountered.

○Try to find out exactly what problem occurred under exactly what conditions by asking the rider; knowing this information may help you reproduce the problem.

○The following sample diagnosis sheet will help prevent you from overlooking any areas, and will help you decide if it is a DFI system problem, or a general engine problem.

Troubleshooting the DFI System

Sample Diagnosis Sheet

Rider name		**Model**
Engine No.		**Frame No.**
Date problem occurred		
Environment when problem occurred.		
Weather	☐ fine, ☐ cloudy, ☐ rain, ☐ snow, ☐ always, ☐ other:	
Temperature	☐ hot, ☐ warm, ☐ cold, ☐ very cold, ☐ always	
Problem frequency	☐ chronic, ☐ often, ☐ once	
Altitude	☐ normal, ☐ high (about 1 000 m or more)	
Motorcycle conditions when problem occurred.		
Orange FI warning indicator light (LED)	☐ lights up immediately after starting the engine, and goes off after 2 seconds (with engine running) (normal).	
	☐ lights up for 2 seconds immediately after starting the engine, and goes off for 3 seconds, and then keeps going on. (with engine running) (DFI problem)	
	☐ unlights (light, ECU or its wiring fault).	
	☐ sometimes lights up (probably wiring fault).	
Starting difficulty	☐ no cranking.	☐ no spark.
	☐ no fuel flow (☐ no fuel in tank, ☐ no fuel pump sound).	
	☐ engine flooded (do not crank engine with throttle opened, which promotes engine flooding).	
	☐ other:	
Engine stops	☐ right after starting.	☐ when moving off.
	☐ when opening throttle grip.	☐ when stopping the motorcycle.
	☐ when closing throttle grip.	☐ when cruising.
	☐ other:	
Poor running at low speed	☐ very low fast idle speed.	
	☐ very low idle speed, ☐ very high idle speed, ☐ rough idle speed.	
	☐ spark plug loose (tighten it).	
	☐ spark plug dirty, broken, or gap maladjusted (adjust it).	
	☐ backfiring.	☐ afterfiring.
	☐ hesitation when acceleration.	☐ engine oil viscosity too high.
	☐ brake dragging.	☐ clutch slipping.
	☐ engine overheating.	
	☐ other:	
Poor running or no power at high speed	☐ spark plug loose (tighten it).	☐ spark plug incorrect (replace it).
	☐ spark plug dirty, broken, or gap maladjusted (remedy it).	
	☐ knocking (fuel poor quality or incorrect).	☐ engine overheating.
	☐ brake dragging.	☐ engine oil level too high.
	☐ clutch slipping.	☐ engine oil viscosity too high.
	☐ other:	

DFI System Troubleshooting Guide

NOTE

○*This is not an exhaustive list, giving every possible cause for each problem listed. It is meant simply as a rough guide to assist the troubleshooting for some of the more common difficulties in DFI system.*

○*The ECU may be involved in the DFI electrical and ignition system troubles. If these parts and circuits are checked out good, be sure to check the ECU for ground and power supply. If the ground and power supply are checked good, replace the ECU.*

Engine Won't Turn Over

Symptoms or Possible Causes	Actions (chapter)
Gear position switch trouble	Inspect (see chapter 3).
Vehicle-down sensor OFF	Reinstall (see chapter 3).
Crankshaft sensor trouble	Inspect (see chapter 16).
Ignition coil shorted or not in good contact	Inspect or Reinstall (see chapter 16).
Ignition coil trouble	Inspect (see chapter 16).
Spark plug dirty, broken or gap maladjusted	Inspect and replace (see chapter 2).
Spark plug incorrect	Replace it with correct plug (see chapter 2).
ECU ground and power supply trouble	Inspect (see chapter 3).
ECU trouble	Inspect (see chapter 3, 16).
No or little fuel in tank	Supply fuel (see Owner's Manual).
Fuel Injector trouble	Inspect and replace (see chapter 3).
Fuel pump not operating	Inspect (see chapter 3).
Fuel filter or pump screen clogged	Inspect and replace fuel pump (see chapter 3).
Fuel pressure regulator trouble	Inspect fuel pressure and replace fuel pump (see chapter 3).
Fuel line clogged	Inspect and repair (see chapter 3).

Poor Running at Low Speed

Symptoms or Possible Causes	Actions (chapter)
Spark weak:	
Ignition coil shorted or not in good contact	Inspect or Reinstall (see chapter 16).
Ignition coil trouble	Inspect (see chapter 16).
Spark plug dirty, broken or gap maladjusted	Inspect and replace (see chapter 2).
Spark plug incorrect	Replace it with correct plug (see chapter 2).
ECU trouble	Inspect (see chapter 3, 16).
Fuel/air mixture incorrect:	
Little fuel in tank	Supply fuel (see Owner's Manual).
Air cleaner clogged, poorly sealed, or missing	Clean element or inspect sealing (see chapter 3).
Air cleaner duct loose	Reinstall (see chapter 3).
Throttle body assy holder loose	Reinstall (see chapter 3).
Fuel injector dust seal damage	Replace (see chapter 3).
Fuel injector O-ring damage	Replace (see chapter 3).
Fuel filter or pump screen clogged	Inspect and replace fuel pump (see chapter 3).
Fuel pressure regulator trouble	Inspect fuel pressure and replace fuel pump (see chapter 3).
Fuel line clogged	Inspect and repair (see chapter 3).
Intake air pressure sensor trouble	Inspect (see chapter 3).

DFI System Troubleshooting Guide

Symptoms or Possible Causes	Actions (chapter)
Water temperature sensor trouble	Inspect (see chapter 3).
Intake air temperature sensor trouble	Inspect (see chapter 3).
Throttle sensor trouble	Inspect (see chapter 3).
Unstable (rough) idling:	
Fuel pressure too low or too high	Inspect (see chapter 3).
Fuel injector trouble	Inspect (see chapter 3).
Throttle sensor trouble	Inspect (see chapter 3).
Intake air pressure sensor trouble	Inspect (see chapter 3).
Water temperature sensor trouble	Inspect (see chapter 3).
Intake air temperature sensor trouble	Inspect (see chapter 3).
Engine stalls easily:	
Spark plug dirty, broken or gap maladjusted	Inspect and replace (see chapter 2).
Ignition coil trouble	Inspect (see chapter 16).
Throttle sensor trouble	Inspect (see chapter 3).
Intake air pressure sensor trouble	Inspect (see chapter 3).
Water temperature sensor trouble	Inspect (see chapter 3).
Intake air temperature sensor trouble	Inspect (see chapter 3).
Fuel pump trouble	Inspect (see chapter 3).
Fuel injector trouble	Inspect (see chapter 3).
Fuel pressure too low or too high	Inspect (see chapter 3).
Fuel pressure regulator trouble	Inspect fuel pressure and replace fuel pump (see chapter 3).
Fuel line clogged	Inspect and repair (see chapter 3).
Poor acceleration:	
Fuel pressure too low	Inspect (see chapter 3).
Water or foreign matter in fuel	Change fuel. Inspect and clean fuel system (see chapter 3).
Fuel filter or pump screen clogged	Inspect and replace fuel pump (see chapter 3).
Fuel pump trouble	Inspect (see chapter 3).
Fuel injector trouble	Inspect (see chapter 3).
Throttle sensor trouble	Inspect (see chapter 3).
Intake air pressure sensor trouble	Inspect (see chapter 3).
Water temperature sensor trouble	Inspect (see chapter 3).
Intake air temperature sensor trouble	Inspect (see chapter 3).
Spark plug dirty, broken or gap maladjusted	Inspect and replace (see chapter 2).
Ignition coil trouble	Inspect (see chapter 16).
Stumble:	
Fuel pressure too low	Inspect (see chapter 3).
Fuel injector trouble	Inspect (see chapter 3).
Throttle sensor trouble	Inspect (see chapter 3).
Intake air pressure sensor trouble	Inspect (see chapter 3).
Water temperature sensor trouble	Inspect (see chapter 3).
Intake air temperature sensor trouble	Inspect (see chapter 3).

DFI System Troubleshooting Guide

Symptoms or Possible Causes	Actions (chapter)
Surge:	
Unstable fuel pressure	Fuel pressure regulator trouble (Inspect and replace fuel pump) or kinked fuel line (Inspect and replace fuel pump) (see chapter 3).
Fuel injector trouble	Inspect (see chapter 3).
Water temperature sensor trouble	Inspect (see chapter 3).
Backfiring when deceleration:	
Spark plug dirty, broken or gap maladjusted	Inspect and replace (see chapter 16).
Fuel pressure too low	Inspect (see chapter 3).
Fuel pump trouble	Inspect (see chapter 3).
Throttle sensor trouble	Inspect (see chapter 3).
Intake air pressure sensor trouble	Inspect (see chapter 3).
Water temperature sensor trouble	Inspect (see chapter 3).
Intake air temperature sensor trouble	Inspect (see chapter 3).
After fire:	
Spark plug burned or gap maladjusted	Replace (see chapter 16).
Fuel injector trouble	Inspect (see chapter 3).
Intake air pressure sensor trouble	Inspect (see chapter 3).
Water temperature sensor trouble	Inspect (see chapter 3).
Intake air temperature sensor trouble	Inspect (see chapter 3).
Other:	
Intermittent any DFI fault and its recovery	Check that DFI connectors are clean and tight, and examine leads for signs of burning or fraying (see chapter 3).

Poor Running or No Power at High Speed

Symptoms or Possible Causes	Actions (chapter)
Firing incorrect:	
Ignition coil shorted or not in good contact	Inspect or Reinstall (see chapter 16).
Ignition coil trouble	Inspect (see chapter 16).
Spark plug dirty, broken or gap maladjusted	Inspect and replace (see chapter 2).
Spark plug incorrect	Replace it with correct plug (see chapter 2).
ECU trouble	Inspect (see chapter 3, 16).
Fuel/air mixture incorrect:	
Air cleaner clogged, poorly sealed, or missing	Clean element or inspect sealing (see chapter 3).
Air cleaner housing loose	Reinstall (see chapter 3).
Throttle body assy holder loose	Reinstall (see chapter 3).
Fuel injector dust seal damage	Replace (see chapter 3).
Water or foreign matter in fuel	Change fuel. Inspect and clean fuel system (see chapter 3).
Fuel injector O-ring damage	Replace (see chapter 3).
Fuel injector clogged	Inspect and repair (see chapter 3).
Fuel line clogged	Inspect and repair (see chapter 3).
Fuel pump trouble	Inspect (see chapter 3).
Intake air pressure sensor trouble	Inspect (see chapter 3).

DFI System Troubleshooting Guide

Symptoms or Possible Causes	Actions (chapter)
Water temperature sensor trouble	Inspect (see chapter 3).
Intake air temperature sensor trouble	Inspect (see chapter 3).
Throttle sensor trouble	Inspect (see chapter 3).
Knocking:	
Fuel poor quality or incorrect	Fuel change (Use gasoline recommended in the Owner's Manual).
Spark plug incorrect	Replace it with correct plug (see chapter 2).
Ignition coil trouble	Inspect (see chapter 16).
ECU trouble	Inspect (see chapter 3, 16).
Intake air pressure sensor trouble	Inspect (see chapter 3).
Water temperature sensor trouble	Inspect (see chapter 3).
Intake air temperature sensor trouble	Inspect (see chapter 3).
Miscellaneous:	
Throttle valve will not fully open	Inspect throttle cables and lever linkage (see chapter 3).
Engine overheating - Water temperature sensor or crankshaft sensor trouble	(see Overheating of Troubleshooting Guide in chapter 17)
Exhaust Smokes Excessively:	
(Black smokes)	
Air cleaner element clogged	Clean element (see chapter 3).
Fuel pressure too high	Inspect (see chapter 3).
Fuel injector trouble	Inspect (see chapter 3).
Water temperature sensor trouble	Inspect (see chapter 3).
Intake air temperature sensor trouble	Inspect (see chapter 3).
(Brown smoke)	
Air cleaner housing loose	Reinstall (see chapter 3).
Fuel pressure too low	Inspect (see chapter 3).
Water temperature sensor trouble	Inspect (see chapter 3).
Intake air temperature sensor trouble	Inspect (see chapter 3).

Self-Diagnosis

Self-diagnosis Outline

The self-diagnosis system has three modes and can be switched to another mode by grounding the self-diagnosis terminal.

User Mode

The ECU connected orange FI warning indicator light (LED) goes on when DFI system and ignition system parts are faulty. In case of serious troubles, the ECU stops the injection/ignition operation.

Dealer Mode 1

The orange FI warning indicator light (LED) emits service code(s) to show the problem(s) which the DFI system, and ignition system has at the moment of diagnosis.

Dealer Mode 2

The orange FI warning indicator light (LED) emits service code(s) to show the problem(s) which the DFI system, and ignition system had in the past.

Self-diagnosis Procedures

- Disconnect the capacitor lead connector (green) [A].

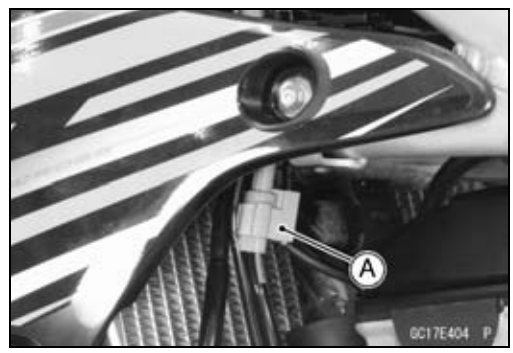

- Connect the power supply harness (option P/No. 26011 -0246) [A] to the capacitor lead connector [B] of the main harness.
- Connect the power supply harness (option P/No. 26011 -0246) to the 12 V battery [C] as shown in the figure.
- The orange FI warning indicator light (LED) will go on for 2 seconds for bulb inspection when the ECU activates.

★If the orange FI warning indicator light (LED) does not go on, inspect the orange FI warning indicator light (LED) (see Orange FI Warning Indicator Light (LED) Inspection).

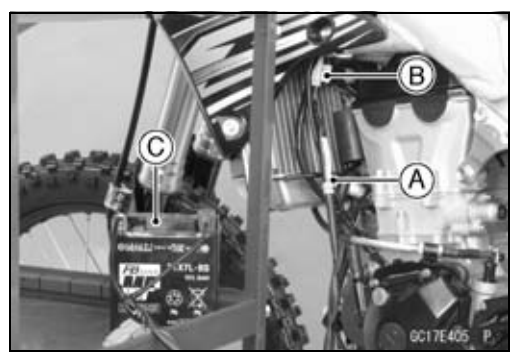

NOTE

○*Use a fully charged battery when conducting self-diagnosis. Otherwise, the light blinks very slowly or doesn't blink.*

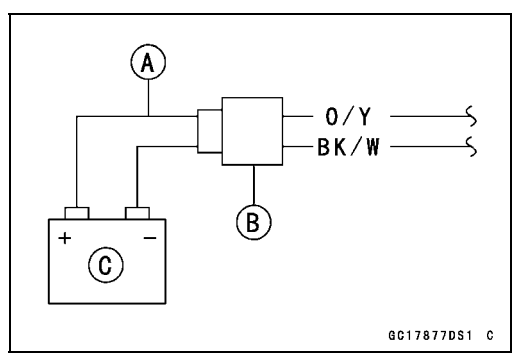

Self-Diagnosis

- Disconnect the self-diagnosis terminal [A] from the cover [B].
- Connect an auxiliary lead [C] for grounding to the self -diagnosis terminal.

NOTE

○*Keep the self-diagnosis terminal grounded during self -diagnosis.*

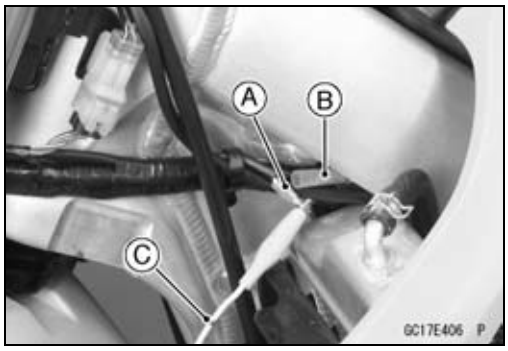

- To enter the self-diagnosis dealer mode 1, ground the self -diagnosis terminal [A] for more than 2 seconds [B], and then keep it grounded continuously [C].
  Ground [D]
  Open [E]
- Count the blinks of the light to read the service code.

○Keep the terminal ground until you finish reading the service code.

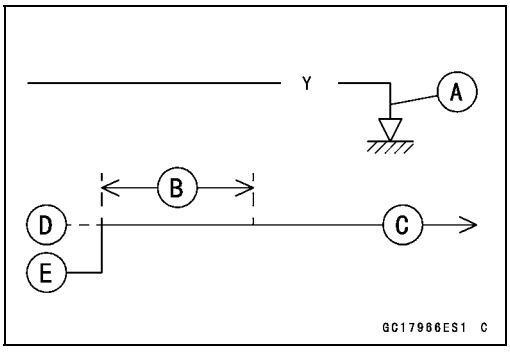

- To enter the self-diagnosis dealer mode 2, ground the self-diagnosis terminal [A] and open it, and then ground the self-diagnosis terminal more than 3 times within 3 seconds [B], and then keep it grounded continuously [C].
  Ground [D]
  Open [E]
- Count the blinks of the light to read the service code.

○Keep the terminal ground until you finish reading the service code.

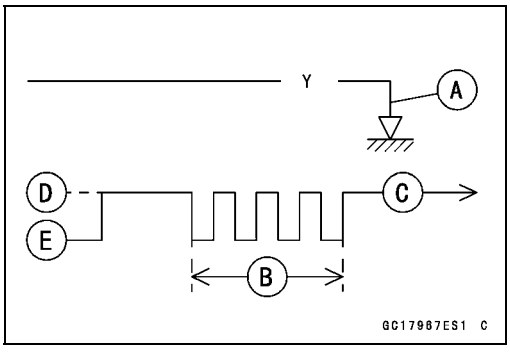

Self-Diagnosis

Self-Diagnosis Flow Chart

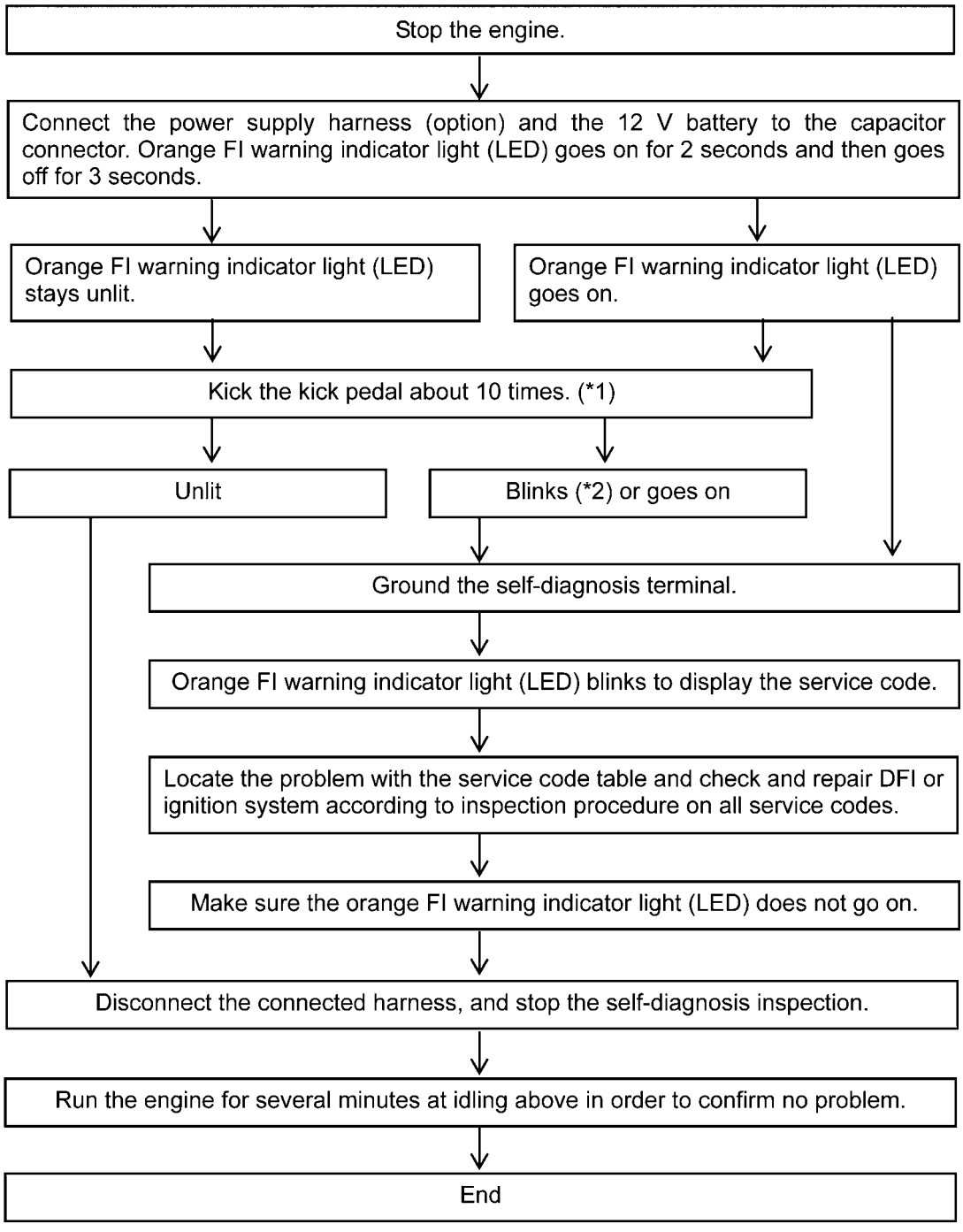

*1: When the engine is rotated, there are parts (crankshaft sensor, fuel injector and ignition coil) by which ECU recognizes the fault. Kick for that.

*2: The blink (0.16 seconds cycle) is warning of impossible starting. The warning of impossible starting displays when connecting the battery and kicked. The starting becomes impossible when the crankshaft sensor, fuel injector, ignition coil, fuel pump and vehicle-down sensor are fault.

GC17353F F

Self-Diagnosis

How to Read Service Codes

○Service codes are shown by a series of long and short blinks of the orange FI warning indicator light (LED) as shown below.
○Read 10th digit and unit digit as the orange FI warning indicator light (LED) blinks.
○When there are a number of problems, all the service codes can be stored and the display will begin starting from the lowest number service code in the numerical order. Then after completing all codes, the display is repeated until the self-diagnosis terminal is open.
○If there is no problem no code and the orange FI warning indicator light (LED) blinks with cycle of 0.5 seconds.
○For example, if two problems occurred in the order of 21, 12, the service codes are displayed from the lowest number in the order listed.
(12 → 21) → (12 → 21) → · · · (repeated)

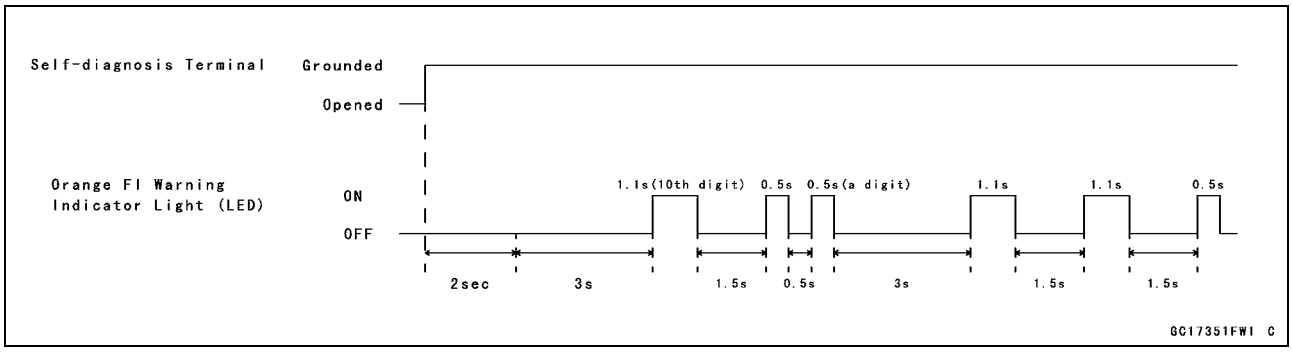

○If the problem is with the following parts, the ECU cannot memorize these problems, the orange FI warning indicator light (LED) doesn't go on, and no service codes can be displayed.
ECU Power Source Wiring and Ground Wiring (see ECU Power Supply Inspection)

How to Erase Service Codes

○Even if the battery or the ECU are disconnected, or the problem is solved, all service codes remain in the ECU.
○In this model, the problem history cannot be erased.

Self-Diagnosis

Service Code Table

Service Codes	Orange FI Warning Indicator Light (LED)	Problems
11	ON OFF	Throttle sensor malfunction, wiring open or short
12		Intake air pressure sensor malfunction, wiring open or short
13		Intake air temperature sensor malfunction, wiring open or short
14		Water temperature sensor malfunction, wiring open or short
21		Crankshaft sensor malfunction, wiring open or short
25		Gear position switch malfunction, wiring open or short
31		Vehicle-down sensor malfunction, wiring open or short
41		Fuel injector malfunction, wiring open or short
46		Fuel pump malfunction, wiring open or short
51		Ignition coil malfunction, wiring open or short

Notes:

○The ECU may be involved in these problems. If all the parts and circuits checked out good, be sure to check the ECU for ground and power supply. If the ground and power supply are checked good, replace the ECU.

○When no service code is displayed, the electrical parts of the DFI system has no fault, and the mechanical parts of the DFI system and the engine are suspect.

Self-Diagnosis

Backups

○The ECU takes the following measures to prevent engine damage when the DFI or the ignition system parts have troubles.

Service Codes	Parts	Output Signal Usable Range or Criteria	Backups by ECU
11	Throttle Sensor	Throttle Sensor Output Voltage 0.391 ~ 4.512 V	If the throttle sensor system fails (the signal is out of the usable range, wiring short or open), the ECU locks ignition timing into the closed throttle position and sets the DFI in the D-J method (1). Also, the throttle sensor system and intake air pressure fails, the ECU locks ignition timing into the closed throttle position and sets the DFI in the α-N method (2).
12	Intake Air Pressure Sensor	Intake Air Pressure Output Voltage 0.352 ~ 4.824 V	If the intake air pressure sensor system fails (the signal is out of the usable range, wiring short or open), the ECU sets the DFI in the α - N method. Conduct ignition and injection operations whenever crank rotates by 360 degrees.
13	Intake Air Temperature Sensor	Intake Air Temperature Output Voltage 0.117 ~ 4.922 V	ECU sets the intake air temperature at 26°C.
14	Water Temperature Sensor	Water Temperature Output Voltage 0.195 ~ 4.902 V	ECU sets the water temperature at 80°C.
21	Crankshaft Sensor	Crankshaft sensor must send 18 signals (output signal) to the ECU at the one cranking.	If the crankshaft sensor generates other than 18 signals, the engine stops by itself.
25	Gear Position Switch	Gear Position Sensor Output Voltage 0.469 ~ 4.727 V	If the gear position switch fails, the ECU sets the low (1st) gear position.
31	Vehicle-down Sensor	Vehicle-down Sensor Output Voltage 0.195 ~ 4.609 V	If the vehicle-down sensor system fails, the ECU shuts off the fuel system and the ignition system. ECU does not backup.
41	Fuel Injector	In succession pulse is input to ECU.	If the injector break down, wiring short or open, the ECU stops the signal input to injector and the fuel delivery to cylinder is stopped.
46	Fuel Pump	Supply Voltage 6 ~ 15 V	If the pump fails, wiring short or open, the ECU stops the pump operations.
51	Ignition Coil	Send signals (output voltage) continuously to the ECU.	If the ignition coil fails, the ECU shuts off the signal to the ignition coil.

Note:

(1) D-J Method: The DFI control method from medium to heavy engine load. When the engine load is light like at idling or low speed, the ECU determines the injection quantity by calculating from the throttle vacuum (intake air pressure sensor output voltage) and engine speed (crankshaft sensor output voltage). This method is called D-J method.

(2) α-N Method: As the engine speed increases, and the engine load turns middle to heavy, the ECU determines the injection quantity by calculating from the throttle opening (main throttle sensor output voltage) and the engine speed. This method is called α-N method.

Throttle Sensor (Service Code 11)

The throttle sensor is a rotating variable resistor that change output voltage according to throttle operating. The ECU senses this voltage change and determines fuel injection quantity, and ignition timing according to engine rpm, and throttle opening.

Input Terminal [A]
Output Terminal [B]
Ground Terminal [C]

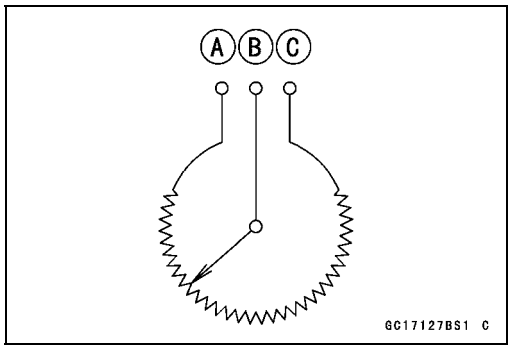

Throttle Sensor Replacement

NOTICE
Never drop the throttle sensor [A], especially on a hard surface. Such a shock to the throttle sensor can damage it.

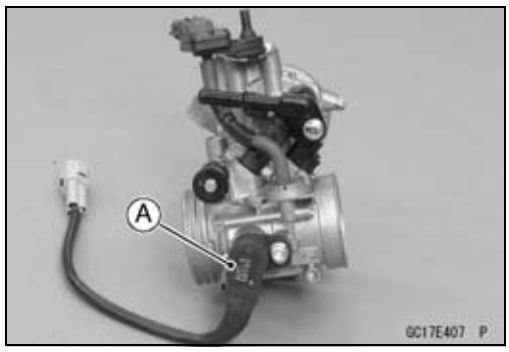

NOTE

- ○*These procedures are explained on the assumption that the intake and exhaust systems of the engine are in good condition.*
- ○*When adjusting the throttle sensor, use a digital voltage meter which can be read the third decimal place. The DC voltage accuracy must be less than ±0.05% reading and ±4 digits at DC 1 V.*
- ○*Read the manufacture's instructions thoroughly before using the meter, incorrect values may cause improper adjustments.*

- Remove the throttle body assy (see Throttle Body Assy Removal).

- Check the paint on the stop screw [A] and make sure that the stop screw has not been adjusted. If stop screw has been adjusted, throttle body assy has to be replaced. Don't tamper with stop screw.

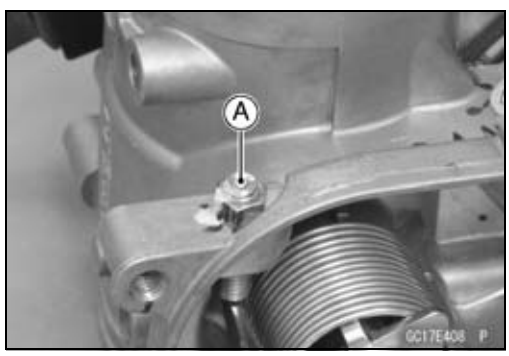

- Remove:
  Throttle Sensor Screw [A]
  Throttle Sensor [B]

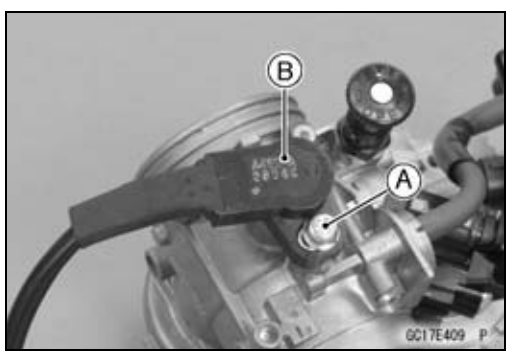

Throttle Sensor (Service Code 11)

- Replace:
  Throttle Sensor Screw [A]
  Throttle Sensor [B]
  O-ring [C]
- Apply engine oil to the new O-ring, and install it to the new throttle sensor.

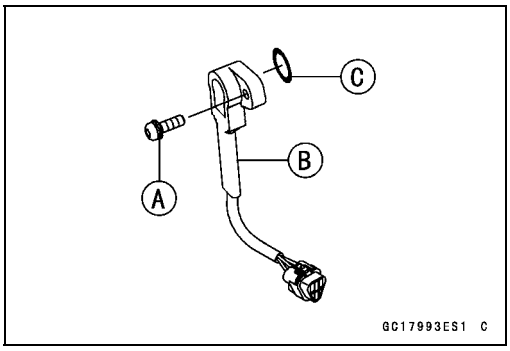

- Engage the inner rotor groove [A] with the throttle shaft [B].

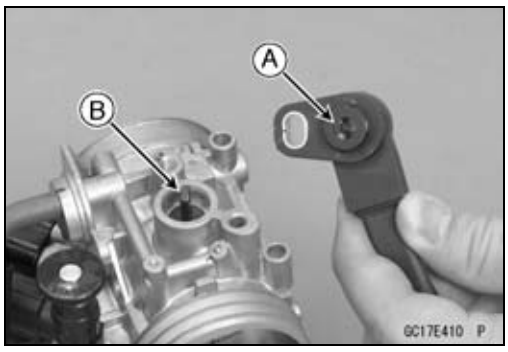

- Insert the throttle sensor [A] into the throttle body.
○Set the throttle sensor to the throttle body assy as shown in the figure.
- Turn the throttle sensor counterclockwise [B] until the mounting holes align.
- Tighten the throttle sensor screw lightly.

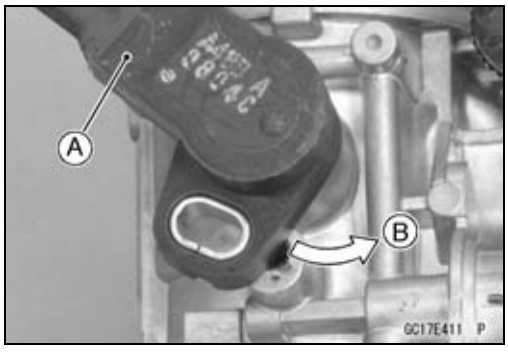

- Connect the measuring adapter [A] between the main harness [B] and the throttle sensor [C].

  Special Tool - Measuring Adapter: 57001-1700
- Connect a digital meter [D] to the measuring adapter leads.

  Throttle Sensor Output Voltage
  Connections to Adapter:
  Digital Meter (+) → W (sensor Y) lead
  Digital Meter (–) → BK (sensor BK) lead

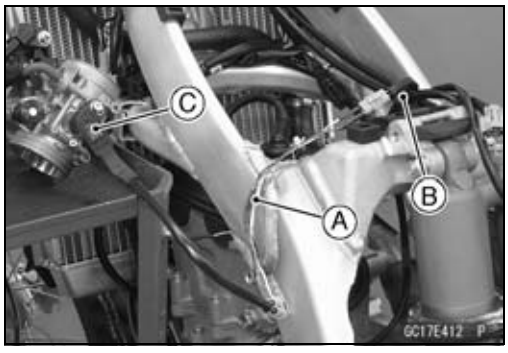

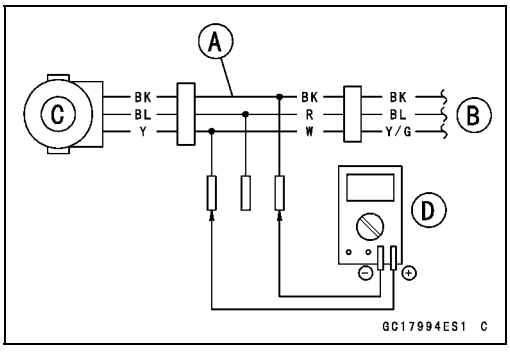

- Refer to the Self-diagnosis Procedures, connect the 12 V battery to the main harness.

Throttle Sensor (Service Code 11)

- Adjust the sensor position so that the output voltage is within the specified voltage range.

Throttle Sensor Output Voltage
Standard: DC 0.58 ~ 0.62 V

★If the input voltage reading shows other than 5 V, calculate a valid output voltage range as follows:

Example:
In the case of an input voltage of 4.75 V
0.58 × 4.75 ÷ 5.00 = 0.55 V
0.62 × 4.75 ÷ 5.00 = 0.59 V
Thus, the valid range is 0.55 ~ 0.59 V.

- Once the sensor is properly adjusted, tighten the throttle sensor screw.

NOTE

○*Take care not to vary the output voltage when tightening the throttle sensor screw.*

- Turn the throttle from closed to full open more than 2 times, and measure the output voltage.

★If the output voltage is not within the specified range, readjust the sensor.

- Install the throttle body assy (see Throttle Body Assy Installation).

Throttle Sensor Input Voltage Inspection

NOTE

○*Be sure the battery is fully charged.*

- Remove:
  Rear Frame with Air Cleaner Housing (see Rear Frame Removal in the Frame chapter)
- Disconnect the throttle sensor connector and connect the measuring adapter [A] between these connectors.
  Main Harness [B]
  Throttle Sensor [C]

Special Tool - Measuring Adapter: 57001-1700

- Connect a digital meter [D] to the measuring adapter leads.

Throttle Sensor Input Voltage
Connections to Adapter:
Digital Meter (+) → R (sensor BL) lead
Digital Meter (–) → BK (sensor BK) lead

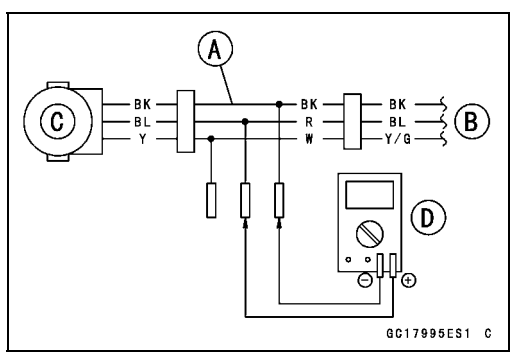

- Refer to the Self-diagnosis Procedures, connect the 12 V battery to the main harness.

Throttle Sensor (Service Code 11)

- Measure the input voltage with the engine stopped and with the connector joined.

Input Voltage
Standard: DC 4.75 ~ 5.25 V

- Disconnect the power supply harness.

★If the reading is within the standard, check the output voltage (see Throttle Sensor Output Voltage Inspection).

★If the reading is out of the standard, remove the ECU and check the wiring for continuity between the main harness connectors.

○Disconnect the ECU and sensor connectors.

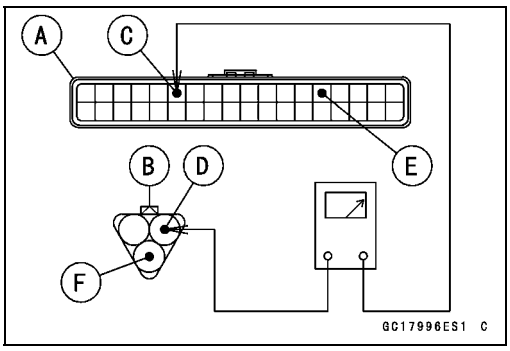

Wiring Continuity Inspection
ECU Connector [A] ←→
Throttle Sensor Connector [B]
R/Y lead [C] (ECU terminal 13) ←→ BL lead [D]
GY lead [E] (ECU terminal 5) ←→ BK lead [F]

★If the wiring is good, check the ECU for its ground and power supply (see ECU Power Supply Inspection).

★If the ground and power supply are good, replace the ECU (see ECU Removal/Installation).

Throttle Sensor Output Voltage Inspection

- Measure the throttle sensor output voltage in the same way as input voltage inspection. Note the following.

○Disconnect the throttle sensor connector and connect the measuring adapter [A] between these connectors.
Main Harness [B]
Throttle Sensor [C]
Digital Meter [D]

Special Tool - Measuring Adapter: 57001-1700

Throttle Sensor Output Voltage
Connections to Adapter:
Digital Meter (+) → W (sensor Y) lead
Digital Meter (–) → BK (sensor BK) lead

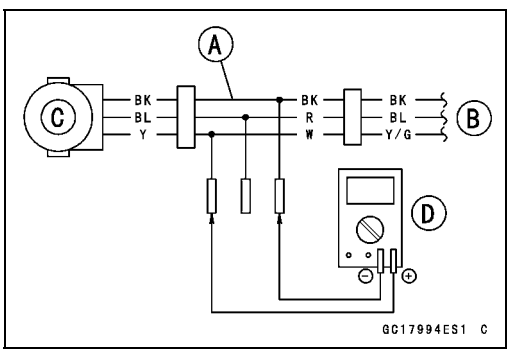

- Start the engine and warm it up thoroughly.
- Check the idle speed to ensure the throttle opening is correct.

Idle Speed
Standard: 2 000 ±50 r/min (rpm)

★If the idle speed is out of the specified range, adjust it (see Idle Speed Adjustment in the Periodic Maintenance chapter).

Throttle Sensor (Service Code 11)

- Measure the output voltage with the engine stopped, and with the connector joined.
- Refer to the Self-diagnosis Procedures, connect the 12 V battery to the main harness.

Output Voltage
Standard: DC 0.58 ~ 0.62 V at idle throttle opening
DC 3.68 ~ 3.88 V at full throttle opening (for reference)

NOTE

○*Open the throttle, confirm the output voltage will be rise.*
○*The standard voltage refers to the value when the voltage reading at the Input Voltage Inspection shows 5 V exactly.*
○*When the input voltage reading shows other than 5 V, derive a voltage range as follows.*
Example:
In the case of a input voltage of 4.75 V.
0.58 × 4.75 ÷ 5.00 = 0.55 V
0.62 × 4.75 ÷ 5.00 = 0.59 V
Thus, the valid range is 0.55 ~ 0.59 V

- Disconnect the power supply harness.

★If the reading is out of the standard, check the throttle sensor resistance (see Throttle Sensor Resistance Inspection).

★If the reading is within the standard, remove the ECU and check the wiring for continuity between the main harness connectors.
○Disconnect the ECU and sensor connectors.

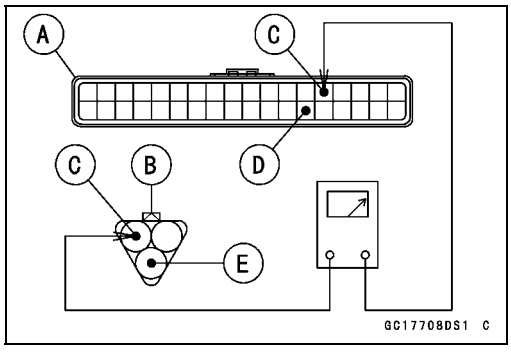

Wiring Continuity Inspection
ECU Connector [A] ←→
Throttle Sensor Connector [B]
Y/G lead [C] (ECU terminal 5) ←→ Y/G lead
GY lead [D] (ECU terminal 24) ←→ BK lead [E]

★If the wiring is good, check the ECU for its ground and power supply (see ECU Power Supply Inspection).
★If the ground and power supply are good, replace the ECU (see ECU Removal/Installation).

Throttle Sensor Resistance Inspection

- Disconnect the throttle sensor connector.
- Connect a digital meter [A] to the throttle sensor connector [B].
- Measure the throttle sensor resistance.

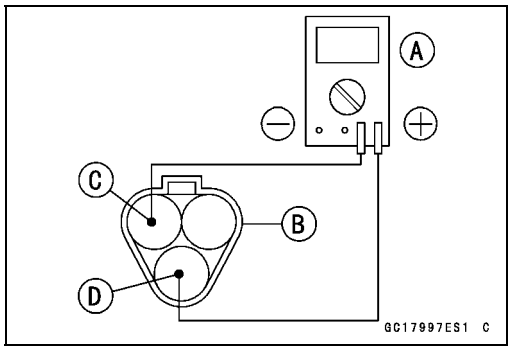

Throttle Sensor Resistance
Connections:
BL lead [C] ← → BK lead [D]

Standard: 4 ~ 6 kΩ

★If the reading is out of the standard, replace the throttle sensor (see Throttle Sensor Replacement).
★If the reading is within the standard, but the problem still exists, replace the ECU (see ECU Removal/Installation).

Throttle Sensor (Service Code 11)

Throttle Sensor Circuit

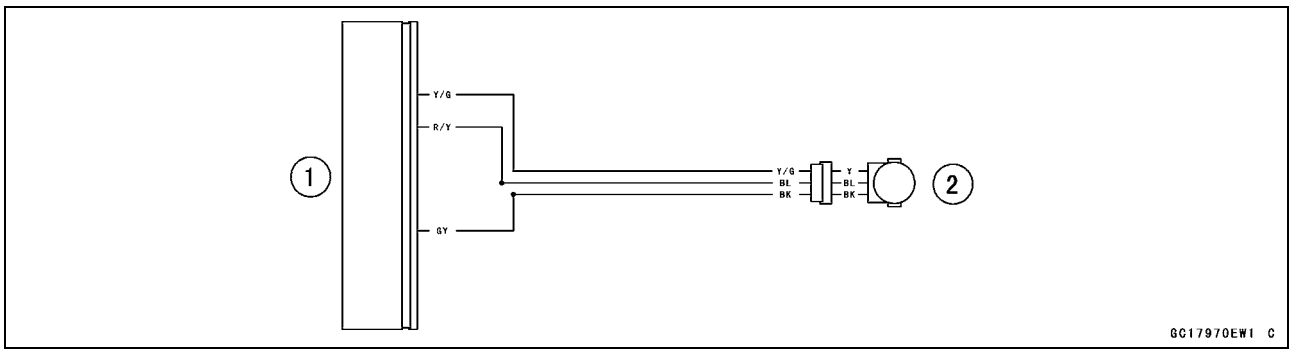

1. ECU
2. Throttle Sensor

Intake Air Pressure Sensor (Service Code 12)

Intake Air Pressure Sensor Removal

NOTICE
Never drop the intake air pressure sensor, especially on a hard surface. Such a shock to the sensor can damage it.

- Remove:
  Fuel Tank (see Fuel Tank Removal)
  Fuel Hose (see Fuel Hose Replacement in the Periodic Maintenance chapter)
  Intake Air Pressure Sensor Connector [A]
- Slide the rubber damper [B] to outside [C] and remove it with the intake air pressure sensor [D] from the plate [E].

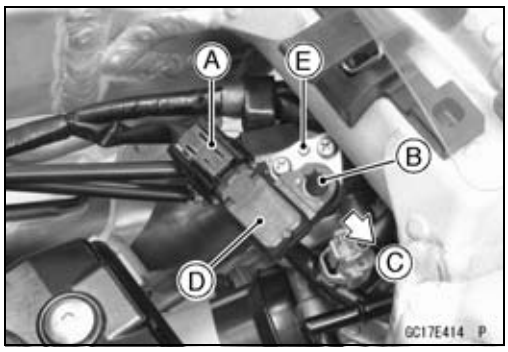

- Disconnect the vacuum hose [A] from the throttle body assy.
- Remove the intake air pressure sensor [B] from the rubber damper [C].

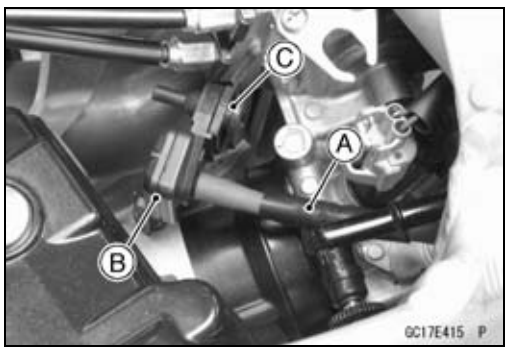

Intake Air Pressure Sensor Installation

- Assemble the rubber damper [A] to the intake air pressure sensor [B].

○Fit the straight edges [C].

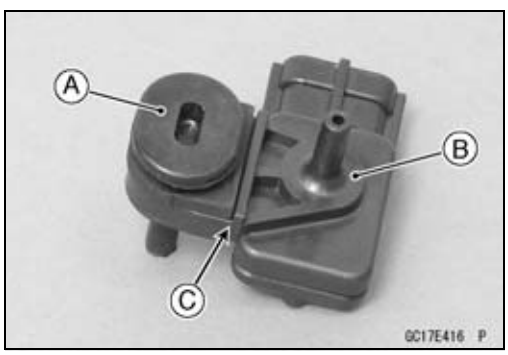

- Install the vacuum hose [A].
- Install the intake air pressure sensor [B].
- Connect the intake air pressure sensor connector [C].

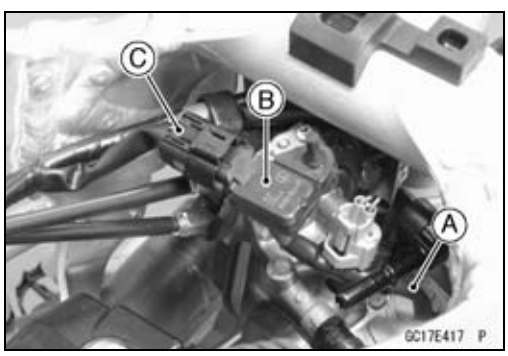

Intake Air Pressure Sensor (Service Code 12)

Intake Air Pressure Sensor Input Voltage Inspection

NOTE

○*Be sure the battery is fully charged.*

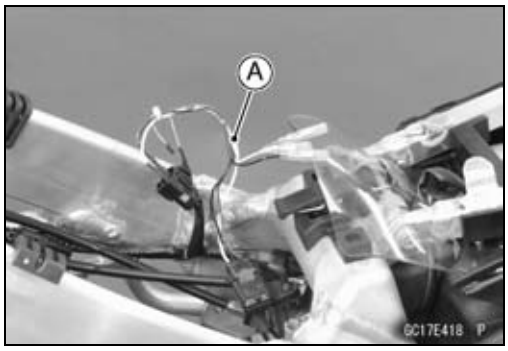

- Disconnect the intake air pressure sensor connector and connect the measuring adapter [A] between these connectors.
  Main Harness [B]
  Intake Air Pressure Sensor [C]

Special Tool - Measuring Adapter: 57001-1700

- Connect a digital meter [D] to the measuring adapter leads.

Intake Air Pressure Sensor Input Voltage
Connections to Adapter:
Digital Meter (+) → R (sensor R/Y) lead
Digital Meter (–) → BK (sensor GY) lead

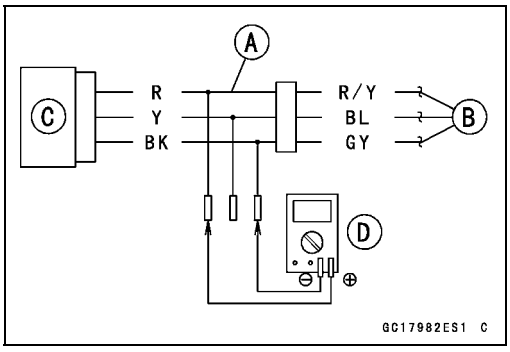

- Refer to the Self-diagnosis Procedures, connect the 12 V battery to the main harness.
- Measure the input voltage with the engine stopped and with the connector joined.

Input Voltage
Standard: DC 4.75 ~ 5.25 V

- Disconnect the power supply harness.

★If the reading is within the standard, check the output voltage (see Intake Air Pressure Sensor Output Voltage Inspection).

★If the reading is out of the standard, remove the ECU and check the wiring for continuity between the main harness connectors.

○Disconnect the ECU and sensor connectors.

Wiring Continuity Inspection
ECU Connector [A] ←→
Intake Air Pressure Sensor Connector [B]
R/Y lead [C] (ECU terminal 13)
GY lead [D] (ECU terminal 24)

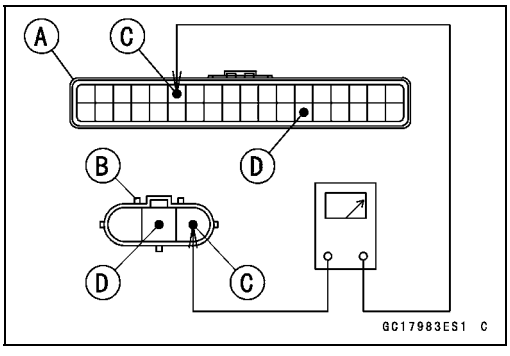

★If the wiring is good, check the ECU for its ground and power supply (see ECU Power Supply Inspection).

★If the ground and power supply are good, replace the ECU (see ECU Removal/Installation).

Intake Air Pressure Sensor (Service Code 12)

Intake Air Pressure Sensor Output Voltage Inspection

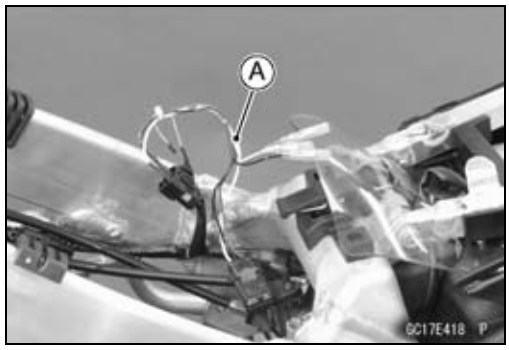

- Measure the intake air pressure sensor output voltage in the same way as input voltage inspection. Note the following.

○Disconnect the intake air pressure sensor connector and connect the measuring adapter [A] between these connectors.
Main Harness [B]
Intake Air Pressure Sensor [C]
Digital Meter [D]

Special Tool - Measuring Adapter: 57001-1700

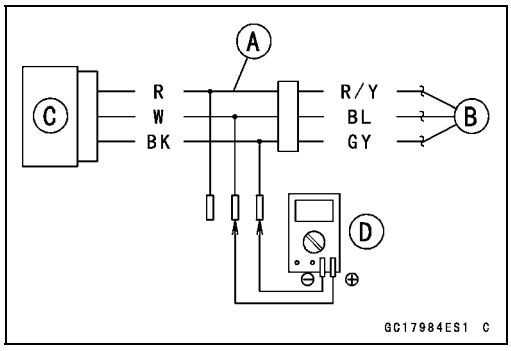

Intake Air Pressure Sensor Output Voltage Connections to Adapter:

Digital Meter (+) → W (sensor BL) lead

Digital Meter (–) → BK (sensor GY) lead

- Measure the output voltage with the engine stopped, and with the connector joined.
- Refer to the Self-diagnosis Procedures, connect the 12 V battery to the main harness.

Output Voltage

Standard:	**DC 3.80 ~ 4.20 V at standard atmospheric pressure (101.32 kPa, 76 cmHg)**

NOTE

○*The output voltage changes according to local atmospheric pressure.*

- Disconnect the power supply harness.

★If the reading is out of the usable range, replace the sensor.

★If the reading is within the usable range, remove the ECU and check the wiring for continuity between the main harness connectors.

○Disconnect the ECU and sensor connectors.

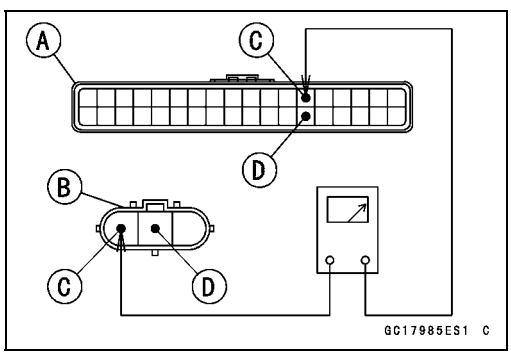

Wiring Continuity Inspection

ECU Connector [A] ←→

Intake Air Pressure Sensor Connector [B]

BL lead [C] (ECU terminal 6)

GY lead [D] (ECU terminal 24)

Intake Air Pressure Sensor (Service Code 12)

★If the wiring is good, check the sensor for various vacuum.
- Remove the intake air pressure sensor [A] and disconnect the vacuum hose from the sensor.
- Connect an auxiliary hose [B] to the intake air pressure sensor.
- Temporarily install the intake air pressure sensor.
- Connect a digital meter [C], vacuum gauge [D], the fork oil level gauge [E] and the measuring adapter to the intake air pressure sensor.

Special Tools - Fork Oil Level Gauge: 57001-1290
Vacuum Gauge: 57001-1369
Measuring Adapter: 57001-1700

Intake Air Pressure Sensor Output Voltage Connections to Adapter:

Digital Meter (+) → W (sensor BL) lead

Digital Meter (–) → BK (sensor GY) lead

- Refer to the Self-diagnosis Procedures, connect the 12 V battery to the main harness.
- Measure the intake air pressure sensor output voltage from various vacuum readings, while pulling the handle of the fork oil level gauge.

○Check the intake air pressure sensor output voltage, using the following formula and chart.

Suppose:
Pg: Vacuum Pressure (Gauge) of Throttle Body
Pl: Local Atmospheric Pressure (Absolute) measured by a barometer
Pv: Vacuum Pressure (Absolute) of Throttle Body
Vv: Sensor Output Voltage (V)

then
Pv = Pl – Pg

For example, suppose the following data is obtained:
Pg = 8 cmHg (Vacuum Gauge Reading)
Pl = 70 cmHg (Barometer Reading)
Vv = 3.2 V (Digital Meter Reading)

then
Pv = 70 – 8 = 62 cmHg (Absolute)

Plot this Pv (62 cmHg) at a point [1] on the chart and draw a vertical line through the point. Then, you can get the usable range [2] of the sensor output voltage.
Usable range = 3.08 ~ 3.48 V
Plot Vv (3.2 V) on the vertical line. → Point [3].

Results: In the chart, Vv is within the usable range and the sensor is normal.

★If the reading is out of the usable range, replace the sensor.
★If the reading is within the usable range, check the ECU for its ground and power supply (see ECU Power Supply Inspection).
★If the ground and power supply are good, replace the ECU (see ECU Removal/Installation).

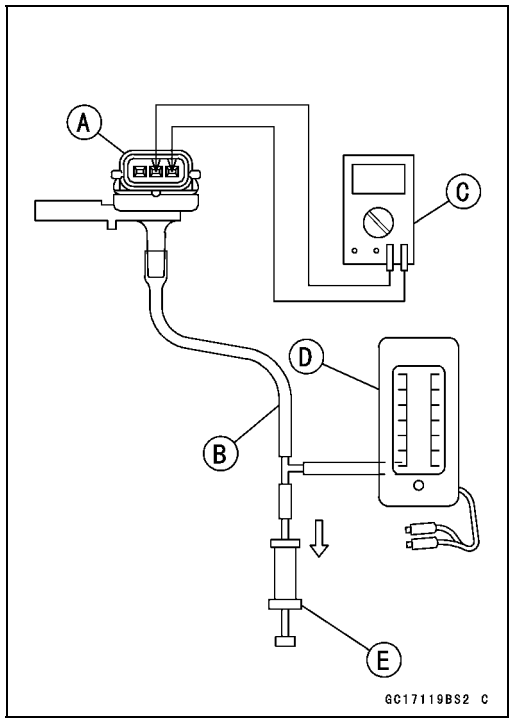

Intake Air Pressure Sensor (Service Code 12)

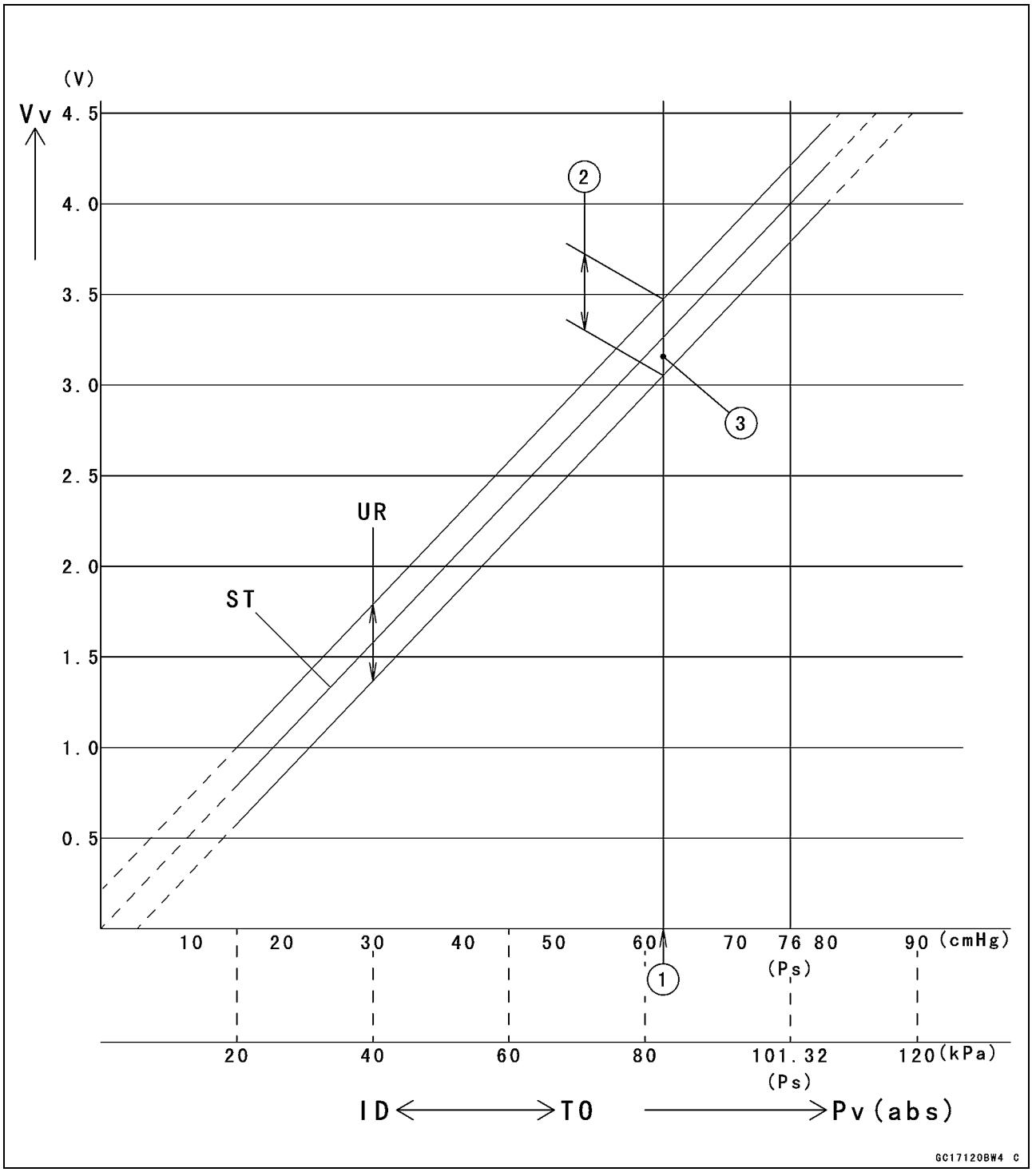

ID: Idling
Ps: Standard Atmospheric Pressure (Absolute)
Pv: Throttle Vacuum Pressure (Absolute)
ST: Standard of Sensor Output Voltage (V)
TO: Throttle Full Open
UR: Usable Range of Sensor Output Voltage (V)
Vv: Intake Air Pressure Sensor Output Voltage (V) (Digital Meter Reading)

Intake Air Pressure Sensor (Service Code 12)

Intake Air Pressure Sensor Circuit

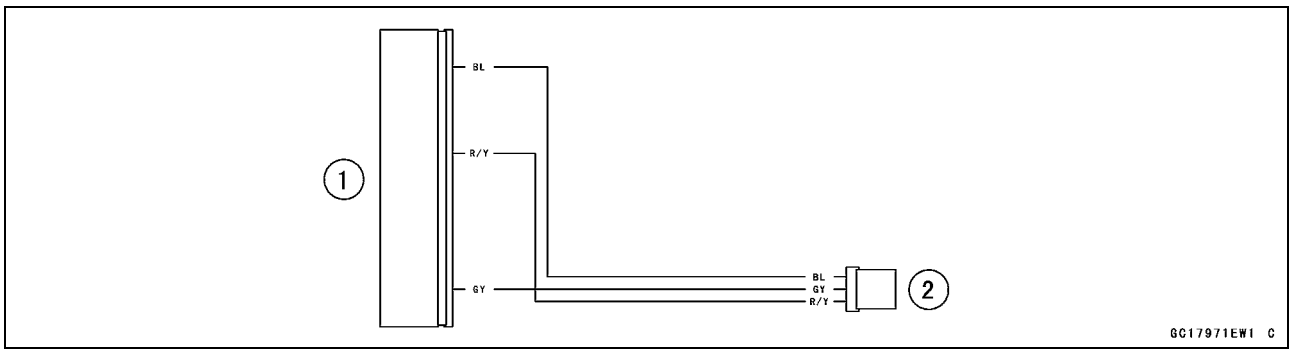

1. ECU
2. Intake Air Pressure Sensor

Intake Air Temperature Sensor (Service Code 13)

Intake Air Temperature Sensor Removal/Installation

NOTICE
Never drop the intake air temperature sensor, especially on a hard surface. Such a shock to the sensor can damage it.

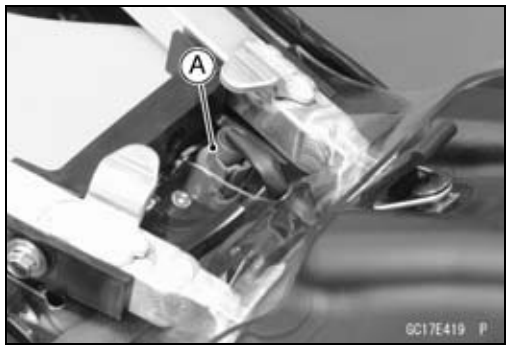

- Remove the seat (see Seat Removal in the Frame chapter).
- Disconnect the connector [A].

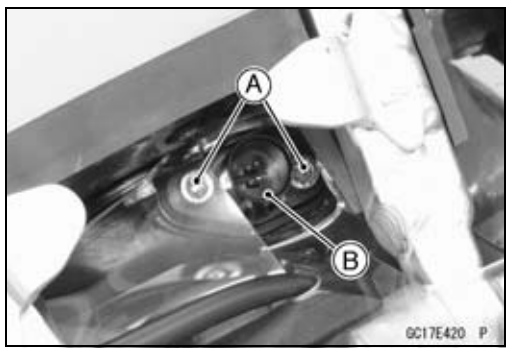

- Remove the bolts [A].
- Pull out the intake air temperature sensor [B].

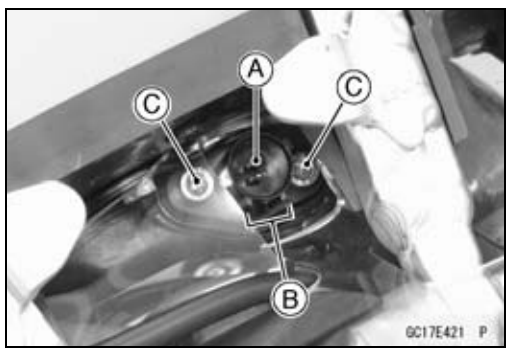

- Put the intake air temperature sensor [A] into the air cleaner housing.

○Face the locks [B] to front side.

- Apply a non-permanent locking agent to the threads of the intake air temperature sensor bolts [C].
- Tighten:

Torque - Intake Air Temperature Sensor Bolts: 4.15 N·m (0.423 kgf·m, 37 in·lb)

- Connect the sensor connector.
- Install the removed parts (see appropriate chapters).

Intake Air Temperature Sensor Output Voltage Inspection

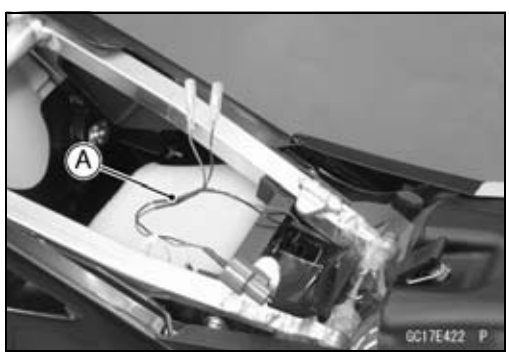

NOTE

○*Be sure the battery is fully charged.*

- Remove the seat (see Seat Removal in the Frame chapter).
- Disconnect the intake air temperature sensor connector and connect the measuring adapter [A] between these connectors.

  Main Harness [B]
  Intake Air Temperature Sensor [C]

Special Tool - Measuring Adapter: 57001-1700

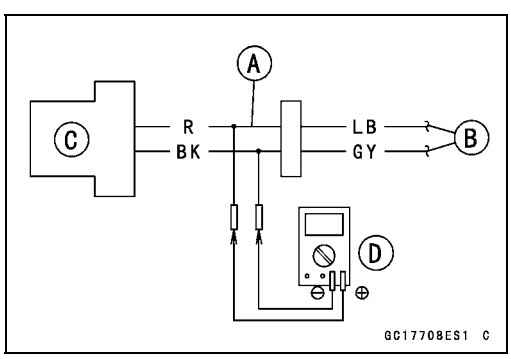

- Connect a digital meter [D] to the measuring adapter leads.

Intake Air Temperature Sensor Output Voltage Connections to Adapter:

Digital Meter (+) → R (sensor LB) lead

Digital Meter (–) → BK (sensor GY) lead

- Refer to the Self-diagnosis Procedures, connect the 12 V battery to the main harness.

Intake Air Temperature Sensor (Service Code 13)

- Measure the output voltage with the engine stopped and the connector joined.

Output Voltage
Standard: About DC 2.28 ~ 3.43 V at intake air temperature 20°C (68°F)

NOTE

○*The output voltage changes according to the intake air temperature.*

- Disconnect the power supply harness.

★If the reading is within the standard, check the ECU for its ground, and power supply (see ECU Power Supply Inspection).
★If the ground and power supply are good, replace the ECU (see ECU Removal/Installation).

★If the reading is out of the standard, remove the ECU and check the wiring for continuity between the main harness connectors.
○Disconnect the ECU and sensor connectors.

Wiring Continuity Inspection
ECU Connector [A] ←→
Intake Air Temperature Sensor Connector [B]
LB lead [C] (ECU terminal 25)
GY lead [D] (ECU terminal 24)

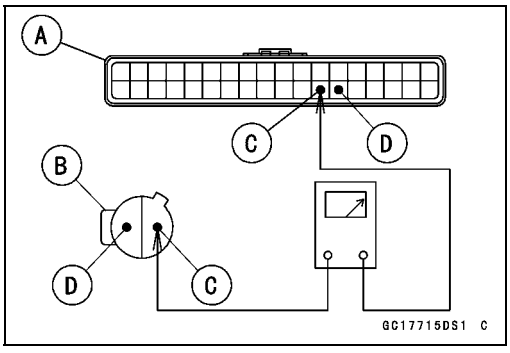

★If the wiring is good, check the intake air temperature sensor resistance (see Intake Air Temperature Sensor Resistance Inspection).

Intake Air Temperature Sensor Resistance Inspection

- Remove the intake air temperature sensor (see Intake Air Temperature Sensor Removal/Installation).
- Suspend the sensor [A] in a container of machine oil so that the heat-sensitive portion is submerged.
- Suspend a thermometer [B] with the heat-sensitive portions [C] located in almost the same depth.

NOTE

○*The sensor and thermometer must not touch the container side or bottom.*

- Place the container over a source of heat and gradually raise the temperature of the oil while stirring the oil gently for even temperature.
- Using a digital meter, measure the internal resistance of the sensor.

Intake Air Temperature Sensor Resistance
Standard: 909 ~ 1 363 Ω at 40°C (104°F)
124 ~ 186 Ω at 100°C (212°F)

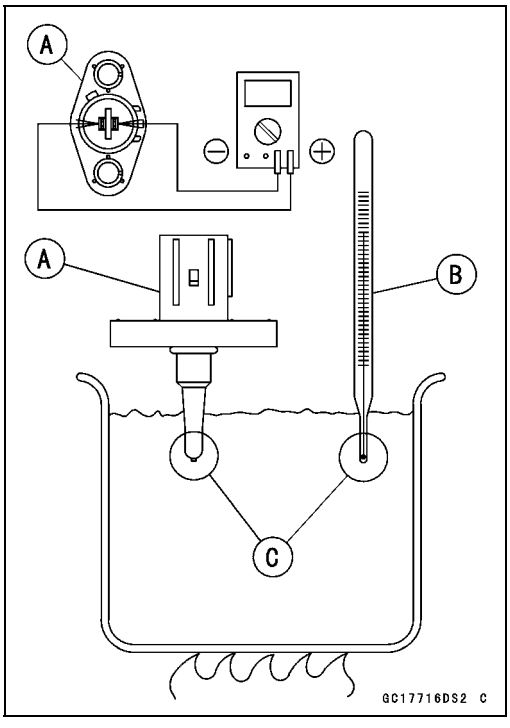

★If the reading is out of the standard, replace the sensor.
★If the reading is within the standard, but the problem still exists, replace the ECU (see ECU Removal/Installation).

Intake Air Temperature Sensor (Service Code 13)

Intake Air Temperature Sensor Circuit

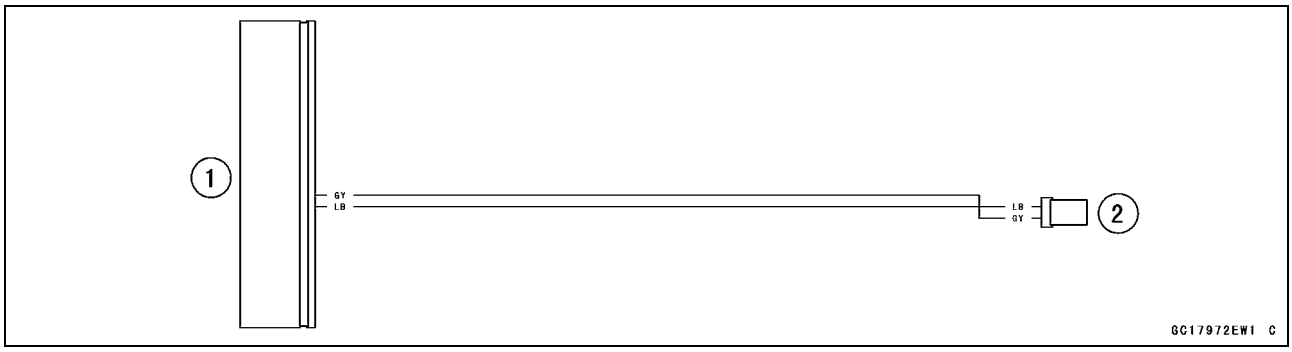

1. ECU
2. Intake Air Temperature Sensor

Water Temperature Sensor (Service Code 14)

Water Temperature Sensor Removal/Installation

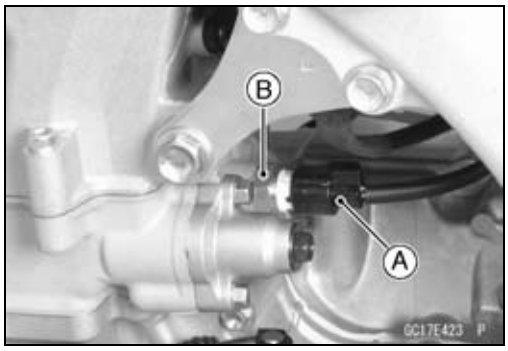

NOTICE
Never drop the water temperature sensor, especially on a hard surface. Such a shock to the sensor can damage it.

- Drain the coolant (see Coolant Draining in the Cooling System chapter).
- Remove:
  Connector [A]
  Water Temperature Sensor [B]
- Replace the O-ring with a new one, apply grease to it.
- Install the new O-ring to the water temperature sensor.
- Tighten:

  Torque - Water Temperature Sensor: 12 N·m (1.2 kgf·m, 106 in·lb)

- Fill the engine with coolant and bleed the air from the cooling system (see Coolant Filling in the Cooling System chapter).

Water Temperature Sensor Output Voltage Inspection

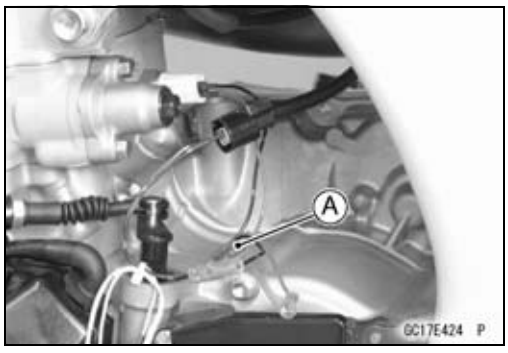

NOTE

○*Be sure the battery is fully charged.*

- Disconnect the water temperature sensor connector and connect the measuring adapter [A] between these connectors.
  Main Harness [B]
  Water Temperature Sensor [C]

  Special Tool - Measuring Adapter: 57001-1700

- Connect a digital meter [D] to the measuring adapter leads.

  Water Temperature Sensor Output Voltage Connections to Adapter:

  Digital Meter (+) → R (sensor W) lead

  Digital Meter (–) → BK (sensor GY) lead

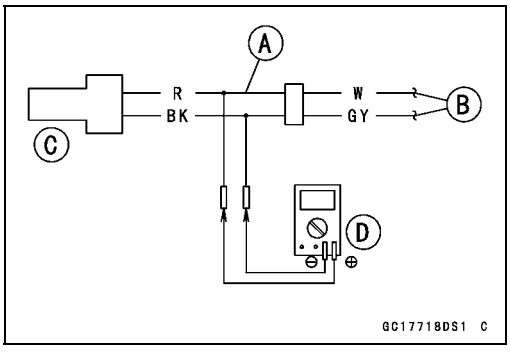

Water Temperature Sensor (Service Code 14)

- Refer to the Self-diagnosis Procedures, connect the 12 V battery to the main harness.
- Measure the output voltage with the engine stopped and the connector joined.

Output Voltage
Standard: About DC 2.80 ~ 2.97 V at water temperature 20°C (68°F)

NOTE

○*The output voltage changes according to the coolant temperature in the engine.*

- Disconnect the power supply harness.

★If the reading is within the standard, check the ECU for its ground, and power supply (see ECU Power Supply Inspection).

★If the ground and power supply are good, replace the ECU (see ECU Removal/Installation).

★If the reading is out of the standard, remove the ECU and check the wiring for continuity between the main harness connectors.

○Disconnect the ECU and sensor connectors.

Wiring Continuity Inspection
ECU Connector [A] ←→
Water Temperature Sensor Connector [B]
W lead [C] (ECU terminal 22)
GY lead [D] (ECU terminal 24)

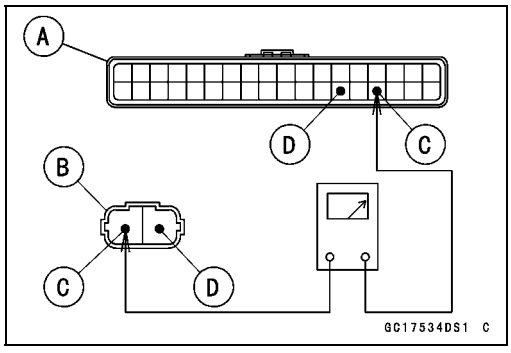

★If the wiring is good, check the water temperature sensor resistance (see Water Temperature Sensor Resistance Inspection).

Water Temperature Sensor (Service Code 14)

Water Temperature Sensor Resistance Inspection

- Remove the water temperature sensor (see Water Temperature Sensor Removal/Installation).
- Suspend the sensor [A] in a container of machine oil so that the heat-sensitive portion and threaded portion are submerged.
- Suspend a thermometer [B] with the heat-sensitive portions [C] located in almost the same depth.

NOTE

○*The sensor and thermometer must not touch the container side or bottom.*

- Place the container over a source of heat and gradually raise the temperature of the oil while stirring the oil gently for even temperature.
- Using a digital meter, measure the internal resistance of the sensor.

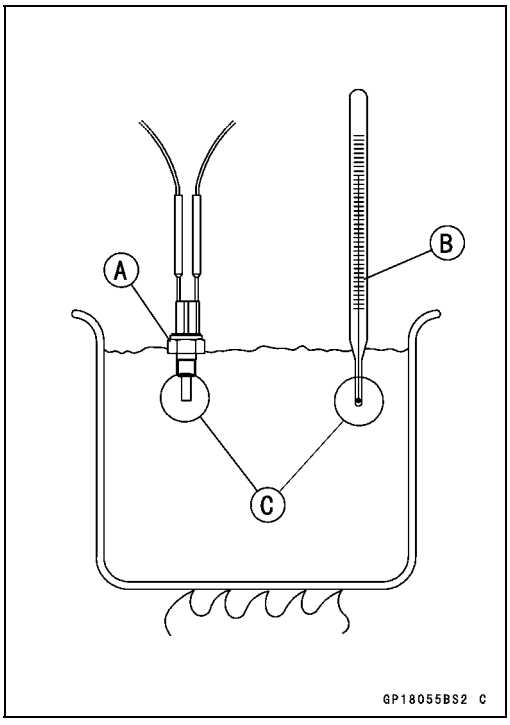

Water Temperature Sensor Resistance

Temperature	Resistance
−20°C (−4°F)	*15.77 ~ 22.02 kΩ
0°C (32°F)	*(about 6.544 kΩ)
40°C (104°F)	0.999 ~ 1.281 kΩ
100°C (212°F)	142.4 ~ 168.8 Ω

*: Reference Information

★If the reading is out of the range, replace the sensor.
★If the reading is within the standard, but the problem still exists, replace the ECU (see ECU Removal/Installation).

Water Temperature Sensor Circuit

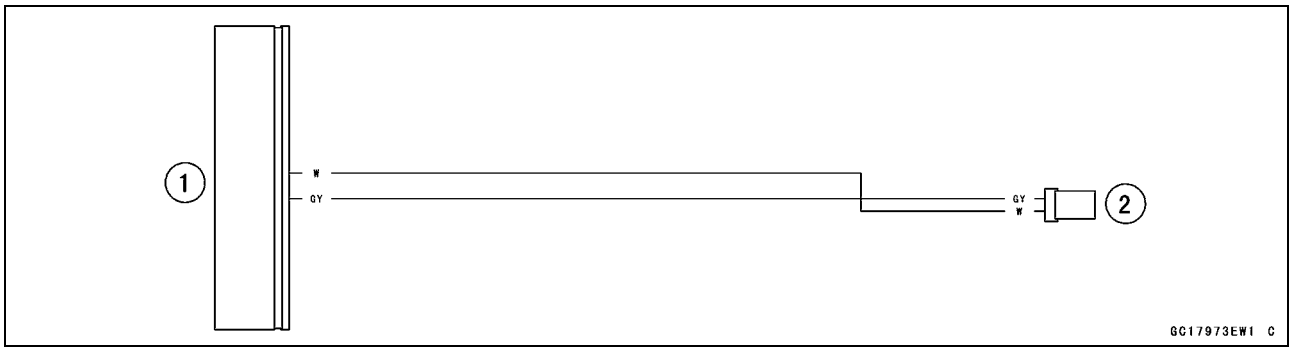

1. ECU
2. Water Temperature Sensor

Crankshaft Sensor (Service Code 21)

The crankshaft sensor has no power source, and when the engine stops, the crankshaft sensor generates no signals.

Crankshaft Sensor Removal/Installation

- Refer to the Stator Coil Removal/Installation in the Electrical System chapter.

Crankshaft Sensor Resistance Inspection

- Refer to the Crankshaft Sensor Inspection in the Electrical System chapter.

★If the reading is within the standard, check the peak voltage (see Crankshaft Sensor Peak Voltage Inspection).

Crankshaft Sensor Peak Voltage Inspection

- Refer to the Crankshaft Sensor Peak Voltage Inspection in the Electrical System chapter.

★If the reading is within the standard, remove the ECU and check the wiring for continuity between the main harness connectors.

○Disconnect the ECU and sensor connectors.

Wiring Continuity Inspection

ECU Connector [A] ←→

Crankshaft Sensor Connector [B]

G/W lead [C] (ECU terminal 3)

W/Y lead [D] (ECU terminal 9)

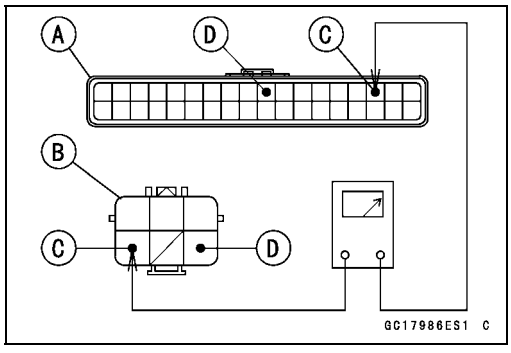

★If the wiring is good, check the ECU for its ground and power supply (see ECU Power Supply Inspection).

★If the ground and power supply are good, replace the ECU (see ECU Removal/Installation).

Crankshaft Sensor Circuit

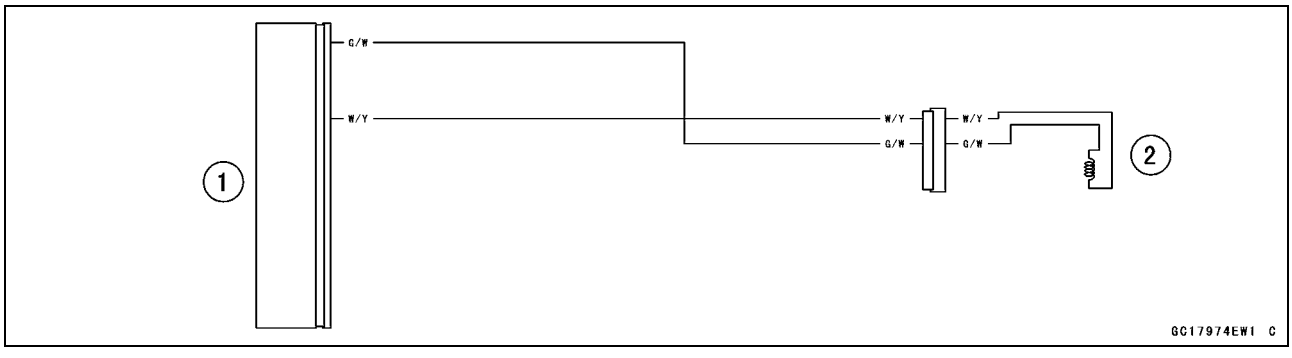

1. ECU
2. Crankshaft Sensor

Gear Position Switch (Service Code 25)

Gear Position Switch Removal

- Remove:
  Shift Pedal (External Shift Mechanism Removal in the Crankshaft/Transmission chapter)
  Gear Position Switch Connector [A] (Gray, 2-pin)

- Open the clamps [A].

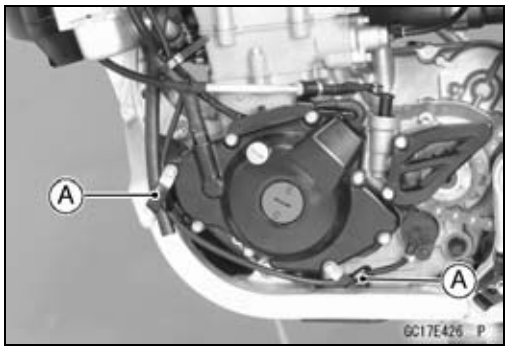

- Remove:
  Screws [A]
  Gear Position Switch [B]

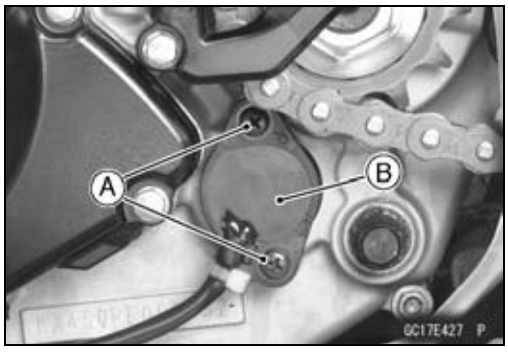

- Remove:
  O-ring [A]
  Gear Position Switch Fingers [B]
  Springs [C]

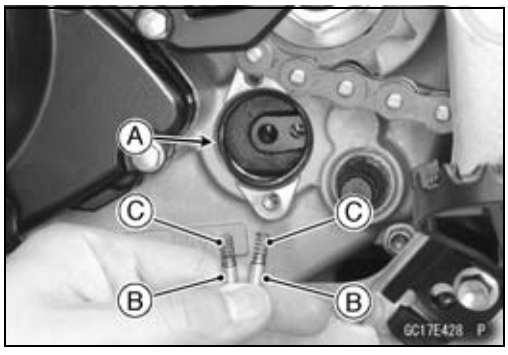

Gear Position Switch Installation

- Install the spring [A] on the switch finger [B].
- Insert the switch finger so that the small diameter [C] is toward the shift drum.
- Replace the O-ring [D] with a new one, and apply grease to it.
- Clean the contact points on the position switch.
- Apply a non-permanent locking agent to the gear position switch screws.
- Tighten:

  Torque - Gear Position Switch Screws: 2.9 N·m (0.30 kgf·m, 26 in·lb)

- Install the removed parts (see appropriate chapters).

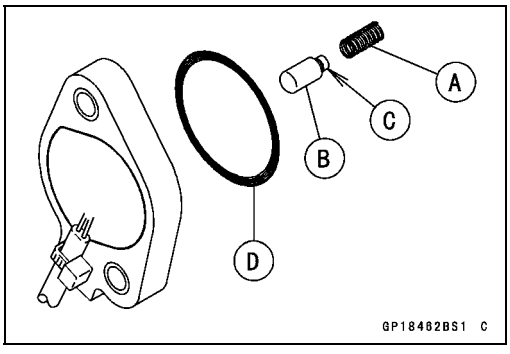

Gear Position Switch (Service Code 25)

Gear Position Switch Inspection

NOTE

○*Be sure the transmission mechanism is good condition.*

- Disconnect the gear position switch lead connector [A] (Gray, 2-pin).

- Set a digital meter [A] and connect it to the terminals in the gear position switch lead connector [B] and ground.
  [C] Internal Circuit

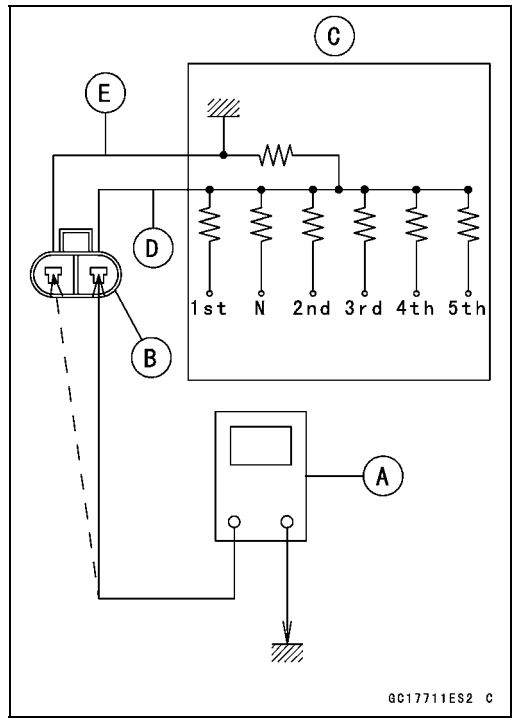

Gear Position Switch Resistance

Gear Position	Connections	
	G/R Lead [D] - Ground	BK Lead [E] - Ground
Neutral	1.43 ~ 1.58 kΩ	about 0 Ω
1st	2.23 ~ 2.46 kΩ	about 0 Ω
2nd	0.95 ~ 1.06 kΩ	about 0 Ω
3rd	644 ~ 711 Ω	about 0 Ω
4th	410 ~ 453 Ω	about 0 Ω
5th	241 ~ 266 Ω	about 0 Ω

★If the digital meter reading is not as specified, replace the gear position switch with a new one.

Gear Position Switch Circuit

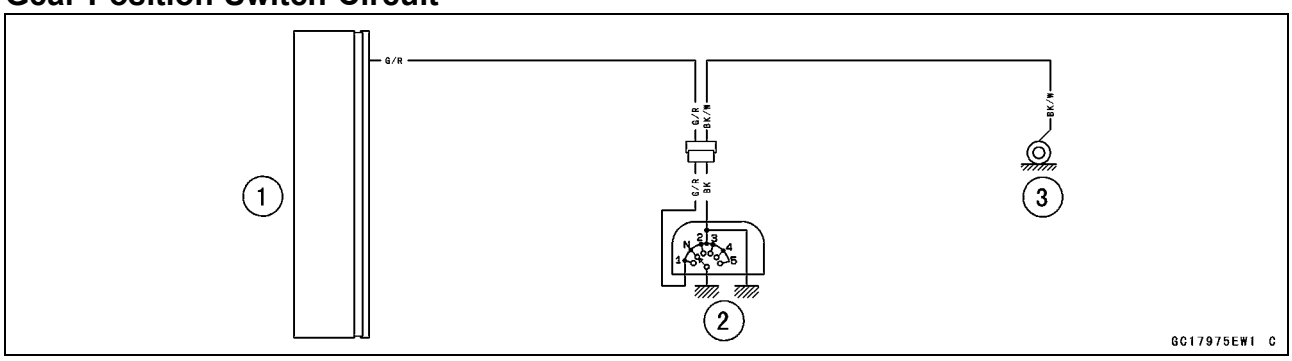

1. ECU
2. Gear Position Switch
3. Frame Ground 1

Vehicle-down Sensor (Service Code 31)

When the motorcycle overturned, the engine stops after 6 seconds if the engine speed is 1 300 r/min (rpm) or more.

Vehicle-down Sensor Removal

NOTICE

Never drop the vehicle-down sensor, especially on a hard surface. Such a shock to the sensor can damage it.

- Pull the vehicle-down sensor [A] from the frame bracket.
- Disconnect the connector [B].

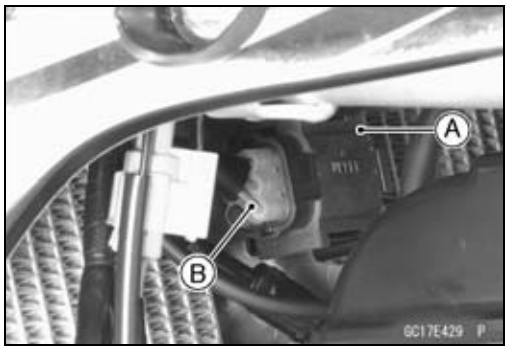

Vehicle-down Sensor Installation

- The UPPER mark [A] of the sensor should face upward and install the sensor.
- Connect the connector.

⚠ WARNING

Incorrect installation of the vehicle-down sensor could cause sudden loss of engine power. The rider could lose balance during certain riding situations like leaning over in a turn with the potential for an accident resulting in injury or death. Ensure that the vehicle-down sensor is held in place by the sensor bracket.

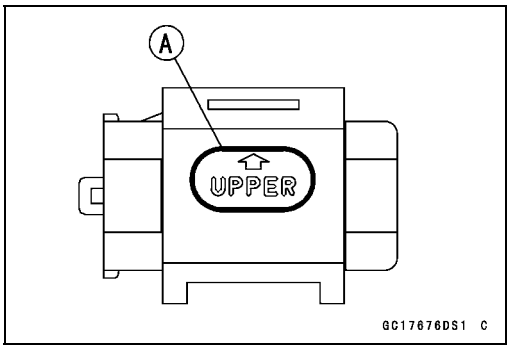

Vehicle-down Sensor Input Voltage Inspection

NOTE

○*Be sure the battery is fully charged.*

- Disconnect the vehicle-down sensor connector and connect the measuring adapter [A] between these connectors.
  Main Harness [B]
  Vehicle-down Sensor [C]

  Special Tool - Measuring Adapter: 57001-1700

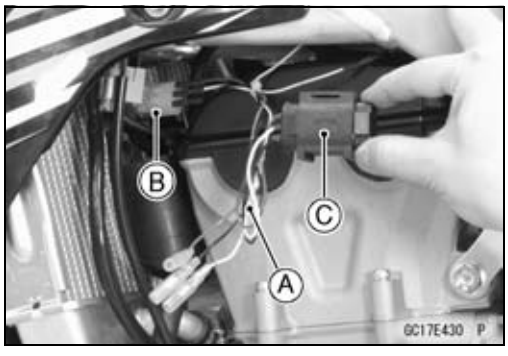

- Connect a digital meter [D] to the measuring adapter leads.

  Vehicle-down Sensor Input Voltage Connections to Adapter:

  Digital Meter (+) → R (sensor R/Y) lead

  Digital Meter (–) → BK (sensor GY) lead

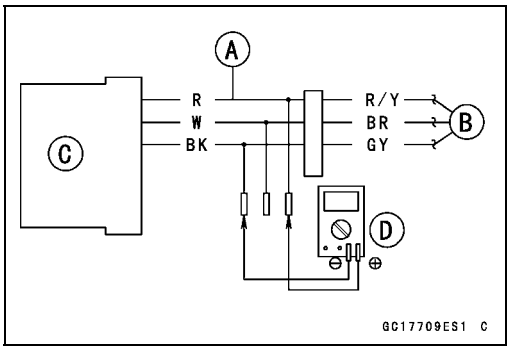

- Refer to the Self-diagnosis Procedures, connect the 12 V battery to the main harness.

Vehicle-down Sensor (Service Code 31)

- Measure the input voltage with the engine stopped and with the connector joined.

Input Voltage
Standard: DC 4.75 ~ 5.25 V

★If the reading is within the standard, check the output voltage (see Vehicle-down Sensor Output Voltage Inspection).

★If the reading is out of the standard, remove the ECU and check the wiring for continuity between the main harness connectors.
○Disconnect the ECU and sensor connectors.

Wiring Continuity Inspection
ECU Connector [A] ←→
Vehicle-down Sensor Connector [B]
R/Y lead [C] (ECU terminal 13)
GY lead [D] (ECU terminal 24)

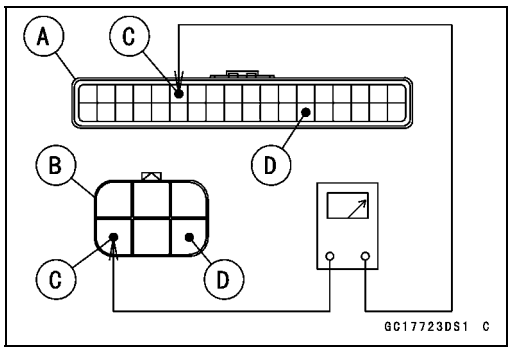

★If the wring is good, check the ECU for its ground and power supply (see ECU Power Supply Inspection).
★If the ground and power supply are good, replace the ECU (see ECU Removal/Installation).

Vehicle-down Sensor Output Voltage Inspection

- Remove the vehicle-down sensor, and connect the measuring adapter [A].

Special Tool - Measuring Adapter: 57001-1700

Main Harness [B]
Vehicle-down Sensor [C]

- Connect a digital meter [D] to the harness adapter leads.

Vehicle-down Sensor Output Voltage
Connections to Adapter:
Digital Meter (+) → W (sensor BR) lead
Digital Meter (–) → BK (sensor GY) lead

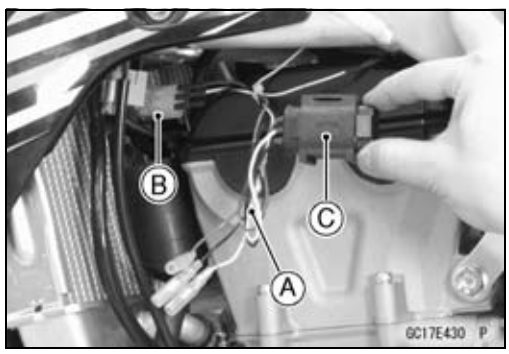

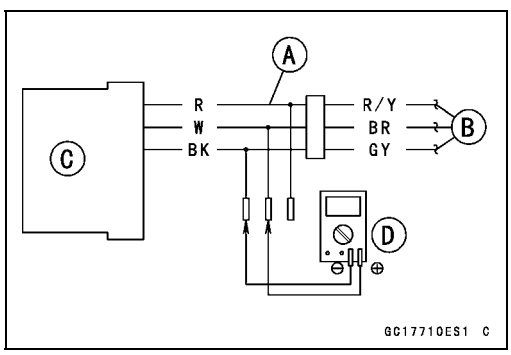

Vehicle-down Sensor (Service Code 31)

- Hold the vehicle-down sensor vertically.
- Refer to the Self-diagnosis Procedures, connect the 12 V battery to the main harness.
- Measure the output voltage with the engine stopped, and with the connector joined.

○Tilt the sensor 55 ~ 75° or more [A] right or left, then hold the sensor almost vertical with the arrow mark [B] pointed up [C].

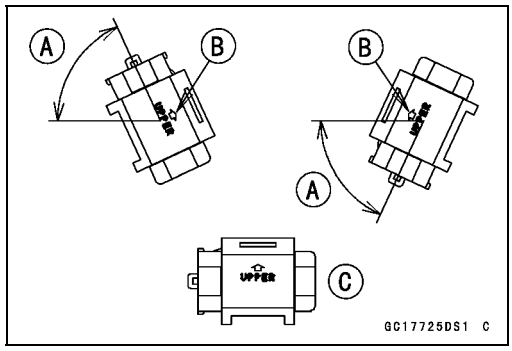

Output Voltage

Standard: With sensor tilted 55 ~ 75° or more right or left: DC 3.7 ~ 4.4 V

With sensor arrow mark pointed up: DC 0.4 ~ 1.4 V

★If the reading is out of the standard, replace the sensor.

★If the reading is within the standard, remove the ECU and check the wiring for continuity between the main harness connectors.

○Disconnect the ECU and sensor connectors.

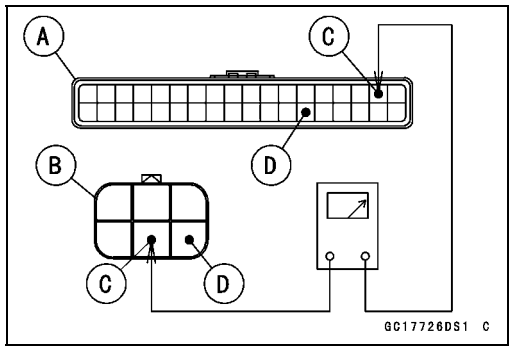

Wiring Continuity Inspection

ECU Connector [A] ←→

Vehicle-down Sensor Connector [B]

BR lead [C] (ECU terminal 2)

GY lead [D] (ECU terminal 24)

★If the wiring is good, check the ECU for its ground and power supply (see ECU Power Supply Inspection).

★If the ground and power supply are good, replace the ECU (see ECU Removal/Installation).

Vehicle-down Sensor Circuit

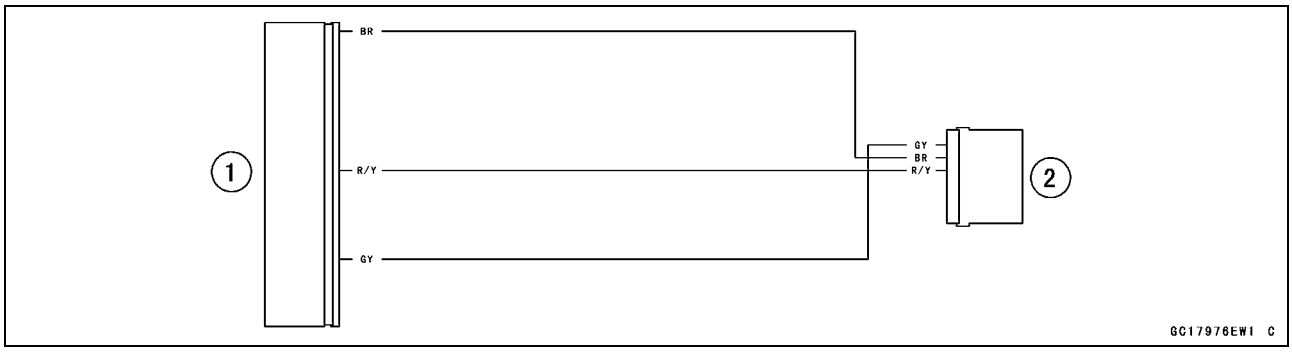

1. ECU
2. Vehicle-down Sensor

Fuel Injector (Service Code 41)

NOTICE
Never drop the fuel injector, especially on a hard surface. Such a shock to the injector can damage it.

Fuel Injector Removal

- Remove:
  Rear Frame (see Rear Frame Removal in the Frame chapter)
  Fuel Tank (see Fuel Tank Removal)
  Fuel Hose (see Fuel Hose Replacement in the Periodic Maintenance chapter)
- Remove the intake air pressure sensor from the plate.
- Disconnect the fuel injector connector [A].

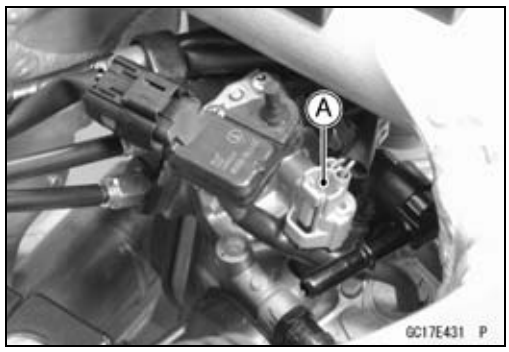

- Remove the delivery pipe mounting screw [A].
- Remove the delivery pipe [B] together with the injector.

NOTE

○*Do not damage the insertion portions of the injector when they are pulled out from the throttle body.*

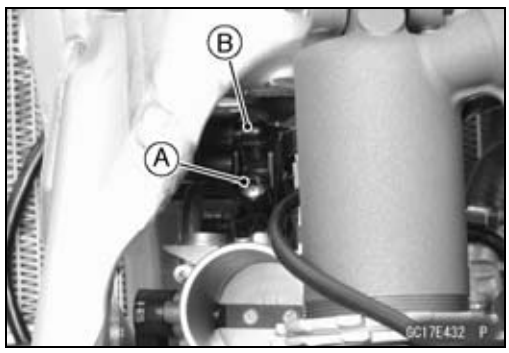

- Separate the injector [A] and the delivery pipe [B].

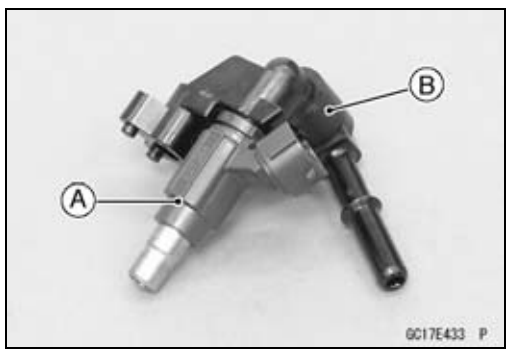

Fuel Injector Installation

- Replace the O-ring [A] and dust seal [B] with a new one.
- Apply engine oil to the O-ring and dust seal.

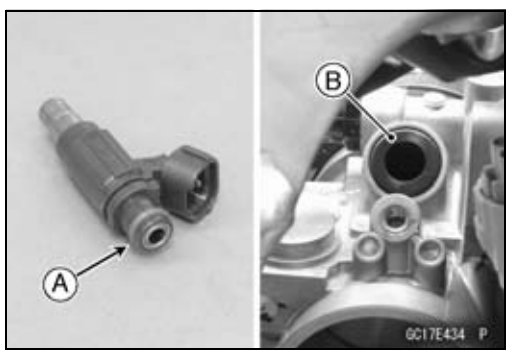

Fuel Injector (Service Code 41)

- Assemble the delivery pipe [A] and the fuel injector [B].

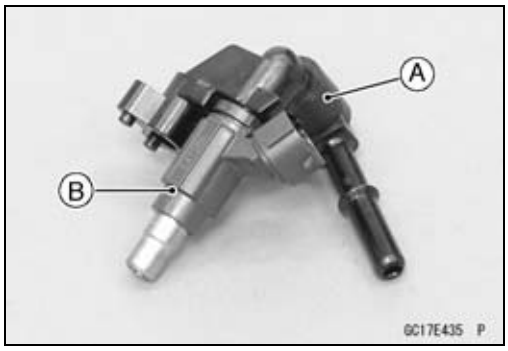

- Fit the projections [A] on the delivery pipe to the hollows [B] of the throttle body assy.

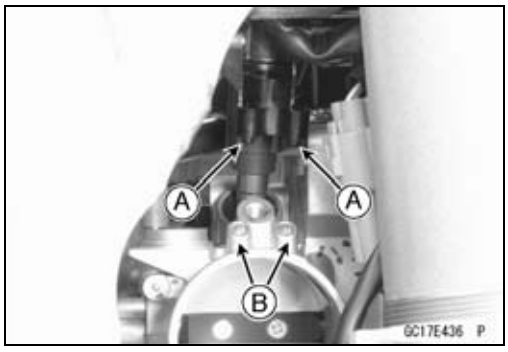

- Tighten the delivery pipe mounting screw [A].
- Connect the fuel injector connector.

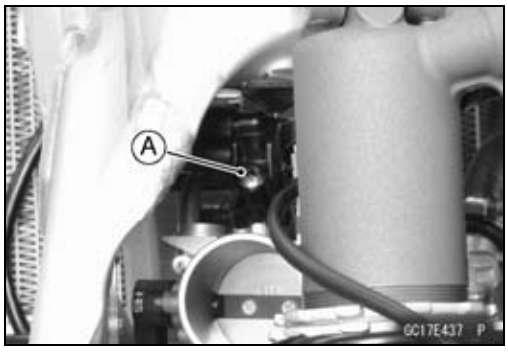

- Install:
  Rear Frame (see Rear Frame Installation in the Frame chapter)
  Fuel Hose (see Fuel Hose Replacement in the Periodic Maintenance chapter)
  Fuel Tank (see Fuel Tank Installation)

Fuel Injector Audible Inspection

NOTE

○*Be sure the battery is fully charged.*

- Start the engine, and let it idle.
- Apply the tip of a screwdriver [A] to the fuel injector [B].
- Put the grip end into your ear, and listen whether the fuel injector is clicking or not.

○A sound scope can also be used.
○The click interval becomes shorter as the engine speed rises.
★If the injector click at a regular intervals, the injector is normal.

- Stop the engine.

★If fuel injector dose not click, check the fuel injector resistance (see Fuel Injector Resistance Inspection).

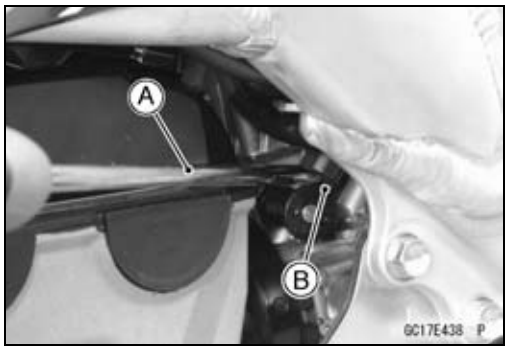

Fuel Injector (Service Code 41)

Fuel Injector Resistance Inspection

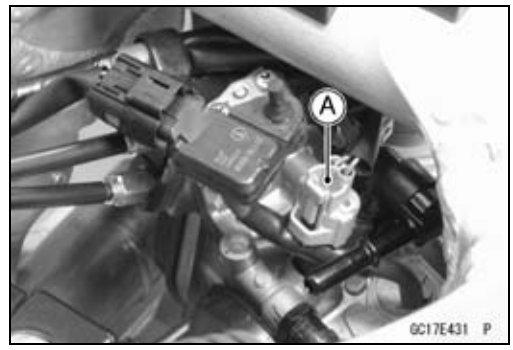

- Remove:
  Fuel Tank (see Fuel Tank Removal)
  Fuel Hose (see Fuel Hose Replacement in the Periodic Maintenance chapter)
  Fuel Injector Connector [A]

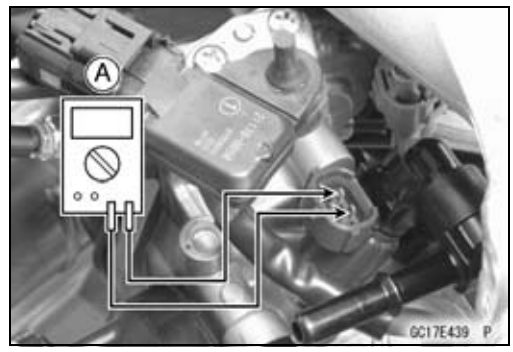

- Connect a digital meter [A] to the injector terminals.
- Measure the fuel injector resistance.

Fuel Injector Resistance
Connections: R/W terminal ←→ BL/R terminal

Standard: About 11.7 ~ 12.3 Ω at 20°C (68°F)

★If the reading is out of the standard, replace the injector.
★If the reading is within the standard, check the power supply voltage (see Fuel Injector Power Supply Voltage Inspection).

Fuel Injector Power Supply Voltage Inspection

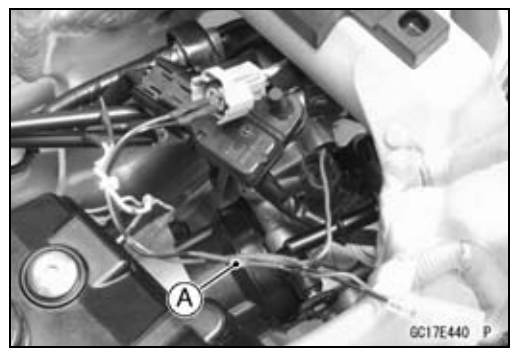

NOTE

○*Be sure the battery is fully charged.*

- Disconnect the injector connector and connect the measuring adapter [A] between these connectors.
  Main Harness [B]
  Fuel Injector [C]

Special Tool - Measuring Adapter: 57001-1700

- Connect a digital meter [D] to the measuring adapter lead.

Fuel Injector Power Supply Voltage
Connect the Adapter:
Digital Meter (+) → R (injector R/W) lead
Digital Meter (–) → Battery (–) Terminal

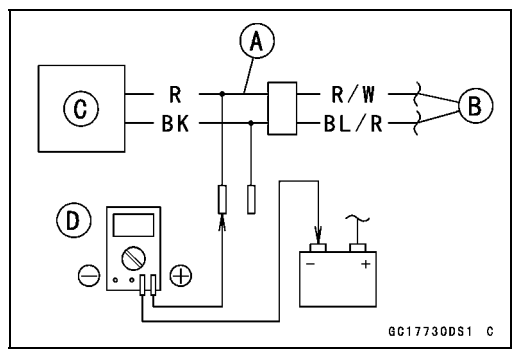

- Refer to the Self-diagnosis Procedures, connect the 12 V battery to the main harness.
- Measure the power supply voltage with the engine stopped.

Power Supply Voltage
Standard: Battery Voltage

★If the voltage is out of the standard, check the power supply wiring (see Fuel Injector Circuit).
★If the reading is within the standard, check the output voltage (see Fuel Injector Output Voltage Inspection).

Fuel Injector (Service Code 41)

Fuel Injector Output Voltage Inspection

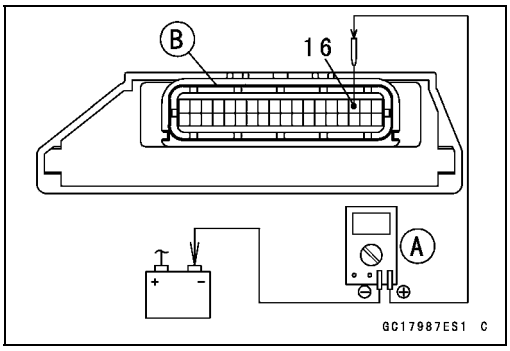

NOTE

○*Be sure the battery is fully charged.*

- Remove the ECU (see ECU Removal).

○Do not disconnect the ECU connector.

- Refer to the Self-diagnosis Procedures, connect the 12 V battery to the main harness.
- Using the needle adapter set, connect a digital meter [A] to the ECU connector [B].

Special Tool - Needle Adapter Set: 57001-1457

Fuel Injector Output Voltage
Connections to ECU Connector:
Digital Meter (+) → BL/R lead (ECU Terminal 16)
Digital Meter (–) → Battery (–) Terminal

- Measure the output with the engine stopped with the connector jointed.

Output Voltage
Standard: Battery Voltage

- Disconnect the power supply harness.

★If the reading is within the standard, check the ECU for its ground and power supply (see ECU Power Supply Inspection)

★If the ground and power supply are good, replace the ECU (see ECU Removal/Installation).

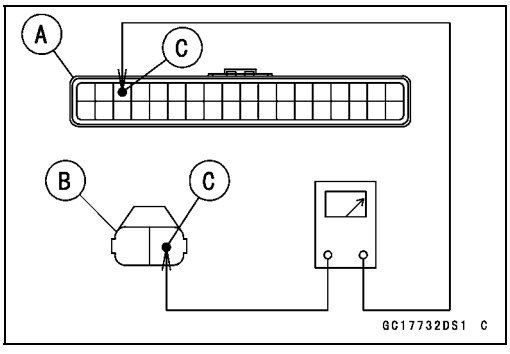

★If the reading is out of the standard, remove the ECU and check the wiring for continuity between the main harness connectors.

○Disconnect the ECU and the fuel injector connector.

Wiring Continuity Inspection
ECU Connector [A] ← → Fuel Injector Connector [B]
BL/R lead [C] (ECU terminal 16)

★If the wiring good, check the ECU ground and power supply (see ECU Power Supply Inspection).

★If the ground and power supply are good, replace the ECU (see ECU Removal/Installation).

Injector Fuel Line Inspection

- Remove:
  Fuel Tank (see Fuel Tank Removal)
  Fuel Hose (see Fuel Hose Replacement in the Periodic Maintenance chapter)

○Place a piece of cloth around the fuel outlet pipe of fuel pump and the delivery pipe of throttle body assy.

Fuel Injector (Service Code 41)

- Check the injector fuel line for leakage as follows:
  - ○Connect a commercially available vacuum/pressure pump [A] to the delivery pipe [B] with the fuel hose [C].
  - ○Hold both ends with the clamps [D].
- Apply a soap and water solution to the areas [E] as shown.
- Watching the pressure gauge, squeeze the pump lever [F], and build up the pressure until the pressure reaches the maximum pressure.

Fuel Line Maximum Pressure
Standard: 300 kPa (3.06 kgf/cm², 44 psi)

NOTICE
During pressure testing, do not exceed the maximum pressure for which the system is designed.

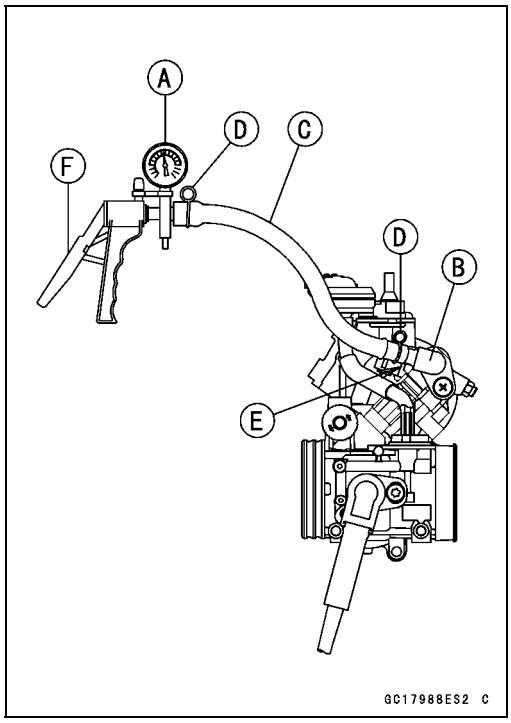

- ○Watch the gauge for at least 6 seconds.
- ★If the pressure holds steady, the fuel line is good.
- ★If the pressure drops at once, or if bubbles are found in the area, the fuel line is leaking. Replace the delivery pipe assy, injector and related parts.
- ○Repeat the leak test, and check the fuel line for no leakage.

- Install:
  Fuel Hose (see Fuel Hose Replacement in the Periodic Maintenance chapter)
  Fuel Tank (see Fuel Tank Installation)
- Start the engine, check the fuel leakage.

Fuel Injector Circuit

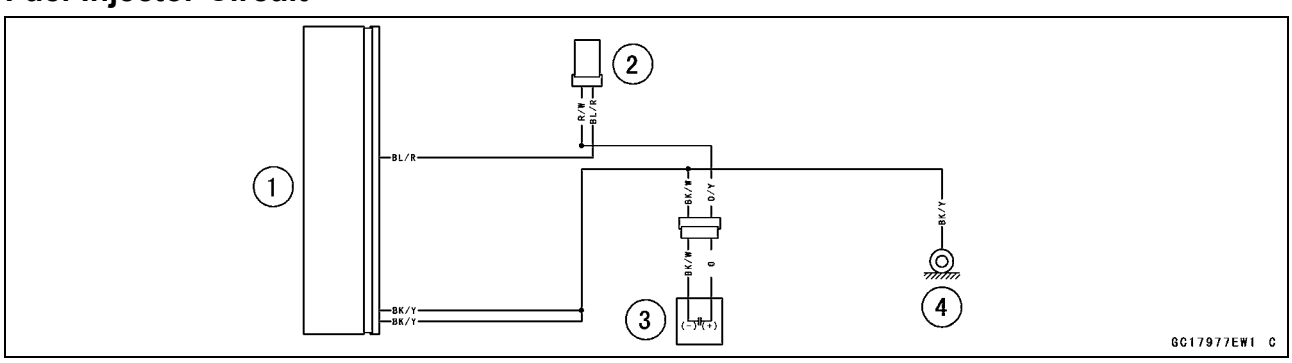

1. ECU
2. Fuel Injector
3. Capacitor
4. Frame Ground 1

Fuel Pump (Service Code 46)

Fuel Pump Removal

⚠ WARNING

Gasoline is extremely flammable and can be explosive under certain conditions. Always stop the engine and do not smoke. Make sure the area is well-ventilated and free from any source of flame or sparks; this includes any appliance with a pilot light.

NOTICE

Never drop the fuel pump, especially on a hard surface. Such a shock to the pump can damage it.

- Draw the fuel out from the fuel tank with a commercially available electric pump.
- Remove the fuel tank (see Fuel Tank Removal).

○Be careful of fuel spillage from the fuel tank since fuel still remains in the fuel tank and fuel pump. Plug the fuel pipe of the fuel tank.

- Turn the fuel tank upside down.
- Loosen the fuel pump bolts evenly following the specified loosening sequence [1 ~ 5], and remove the fuel pump [A].

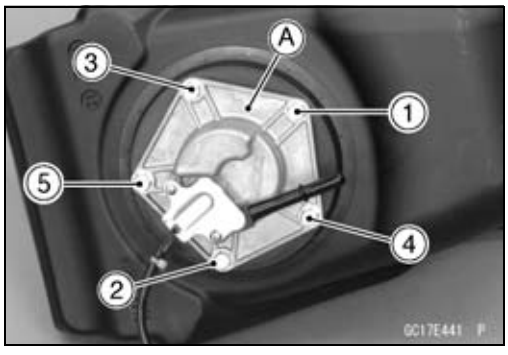

NOTICE

Do not pull the leads of the fuel pump. If they are pulled, the lead terminals may be damaged.

- Discard the fuel pump O-ring [A].

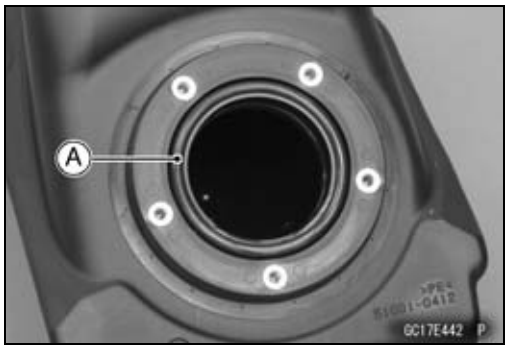

Fuel Pump Installation

- Remove the dirt or dust from the fuel pump [A] by lightly applying compressed air.
- Replace the fuel pump O-ring with a new one.

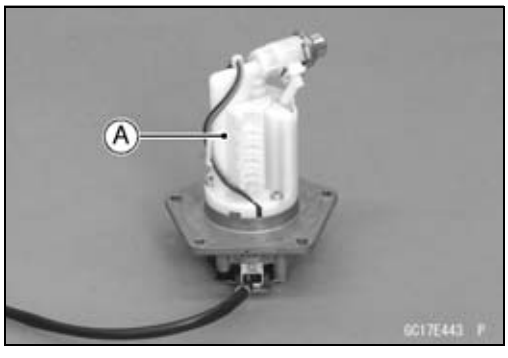

Fuel Pump (Service Code 46)

- Install the fuel pump [A] to the fuel tank.
- Apply a non-permanent locking agent to the threads of the fuel pump bolts.
- Gradually tighten the fuel pump bolts evenly following the specified tightening sequence [1 ~ 6].

  Torque - Fuel Pump Bolts: 9.8 N·m (1.0 kgf·m, 87 in·lb)
- Install the removed parts (see appropriate chapters).

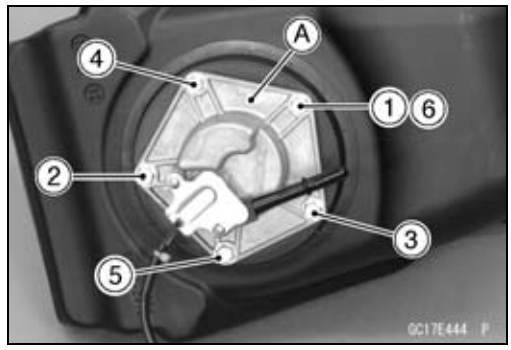

Fuel Pump Operation Inspection

NOTE

○*Be sure the battery is fully charged.*

- Refer to the Self-diagnosis Procedures, connect the 12 V battery to the main harness.
- Make sure that the fuel pump operates (make light sounds) for 5 seconds, and then stops.
- Disconnect the power supply harness.

★If the pump does not operate as described above, check the operating voltage (see Fuel Pump Operating Voltage Inspection).

Fuel Pump Operating Voltage Inspection

NOTE

○*Be sure the battery is fully charged.*

- Remove the left radiator shroud (see Radiator Shroud Removal in the Frame chapter).
- Disconnect the fuel pump lead connector and connect the measuring adapter [A] between these connectors.
  Main Harness [B]
  Fuel Pump [C]

  Special Tool - Measuring Adapter: 57001-1700
- Connect a digital meter [D] to the measuring adapter leads.

  Fuel Pump Operating Voltage
  Connections to Adapter:
  Digital Meter (+) → R (pump R) lead
  Digital Meter (–) → BK (pump BK) lead

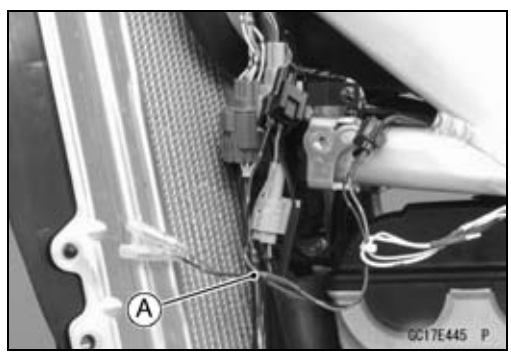

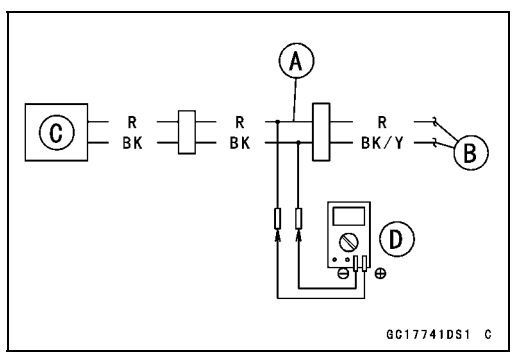

- Refer to the Self-diagnosis Procedures, connect the 12 V battery to the main harness.

Fuel Pump (Service Code 46)

- Measure the operating voltage with engine stopped and with the connector joined.

Operating Voltage
Standard: Battery Voltage

★If the reading is not battery voltage, check the wiring for continuity (see Fuel Pump Circuit).
★If the wiring is good, check the ECU for its ground and power supply (see ECU Power Supply Inspection).
★If the ground and power supply are good, replace the ECU (see ECU Removal/Installation).
★If the reading is in specification, but the fuel pump does not operate, replace the fuel pump (see Fuel Pump Removal/Installation).

Pressure Regulator Removal

○The pressure regulator [A] is built into the fuel pump and can not be removed.

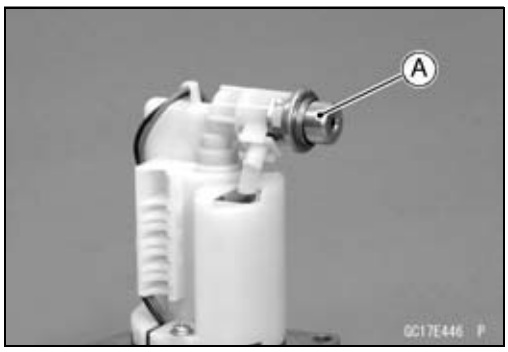

Fuel Filter Cleaning

○The fuel filter [A] is built into the pump and can not be cleaned or checked.
★If the fuel filter is suspected of clogging or being damaged, replace it with the fuel pump as a set.

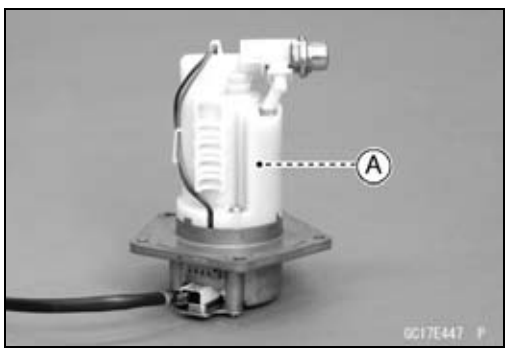

Fuel Pump Circuit

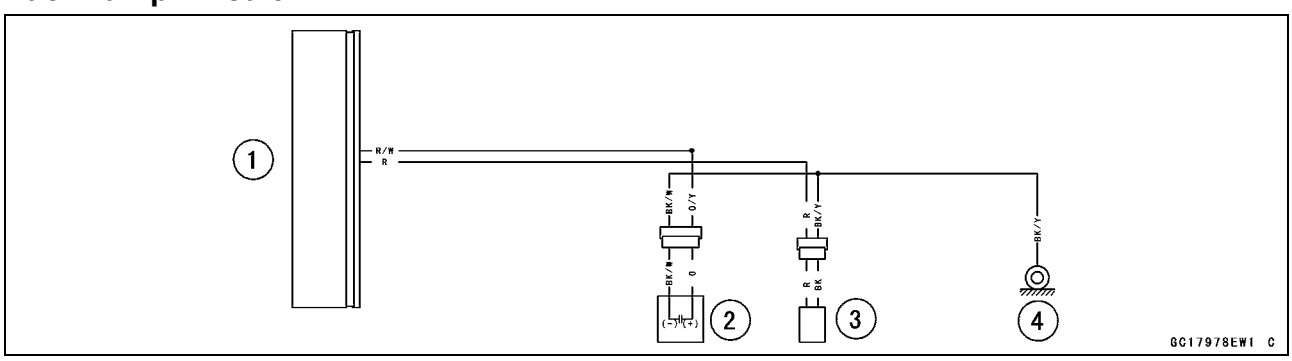

1. ECU
2. Capacitor
3. Fuel Pump
4. Frame Ground 1

Ignition Coil (Service Code 51)

Ignition Coil Removal/Installation

- Refer to the Ignition Coil Removal/Installation in the Electrical System chapter.

Ignition Coil Primary Peak Voltage Inspection

- Refer to the Ignition Coil Primary Peak Voltage Check in the Electrical System chapter.

★If the peak voltage is mach lower than standard, check the wiring for continuity (see Ignition Coil Circuit).

★If the wiring is good, check the ECU for its ground and power supply (see ECU Power Supply Inspection).

★If the ground and power supply are good, replace the ECU (see ECU Removal/Installation).

Ignition Coil Circuit

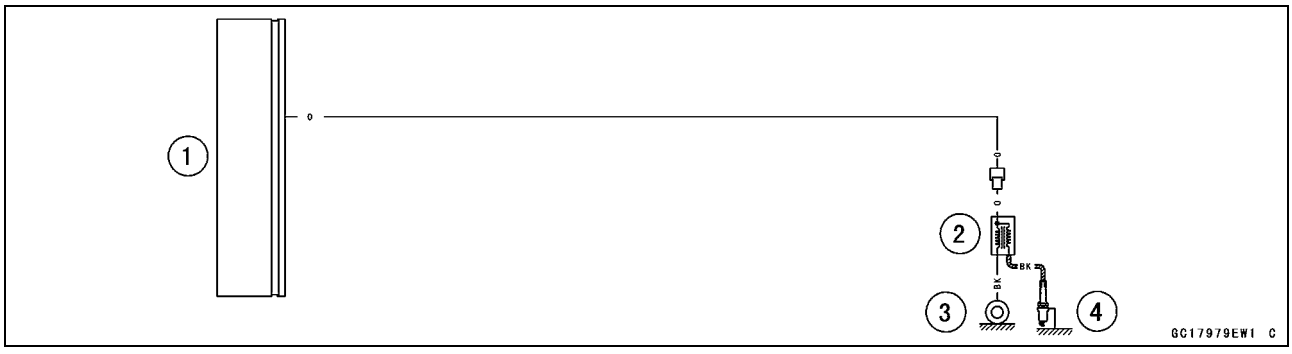

1. ECU
2. Ignition Coil
3. Frame Ground 2
4. Spark Plug

Orange FI Warning Indicator Light (LED)

Orange FI Warning Indicator Light (LED) Inspection

NOTE

○*Be sure the battery is fully charged.*

- Refer to the Self-diagnosis Procedures, connect the 12 V battery to the main harness.
- Confirm that the orange FI warning indicator light (LED) goes on for 2 seconds when the battery connected to the main harness.

★If the orange FI warning indicator light (LED) does not go on, check the wiring for continuity between the main harness.

○Disconnect the capacitor and the launch control mode button connectors.

Wiring Continuity Inspection
Capacitor Connector [A] ←→
Launch Control Mode Button Connector [B]
O/Y lead [C] ←→ R/W lead [D]

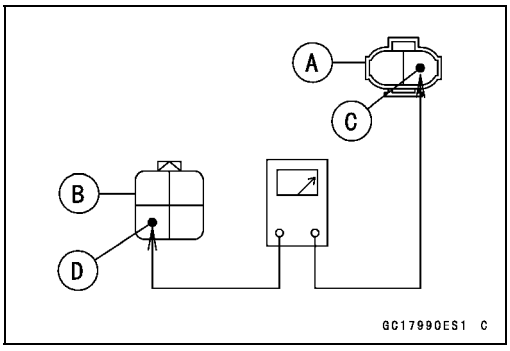

○Disconnect the ECU connector.

Wiring Continuity Inspection
ECU Connector [A] ←→
Launch Control Mode Button Connector [B]
BL/W lead (ECU Terminal 21) [C]

★If the wiring is good, check the orange FI warning indicator light (LED).

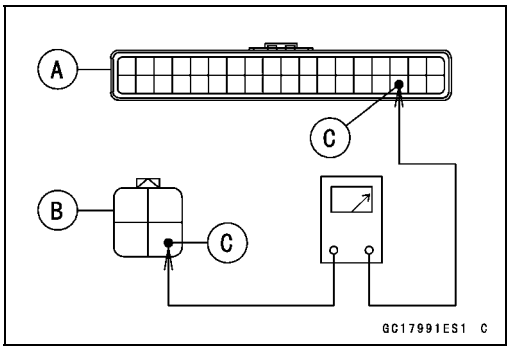

- Connect the 12 V battery [A] to the launch control mode button connector [B] as shown in the figure.

★If the orange FI warning indicator light (LED) does not go on, replace the launch control mode button.

★If the orange FI warning indicator light (LED) goes on, check the ECU for its ground and power supply (see ECU Power Supply Inspection).

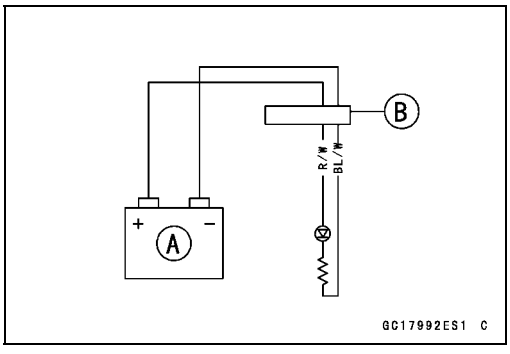

Orange FI Warning Indicator Light (LED)

Orange FI Warning Indicator Light (LED) Circuit

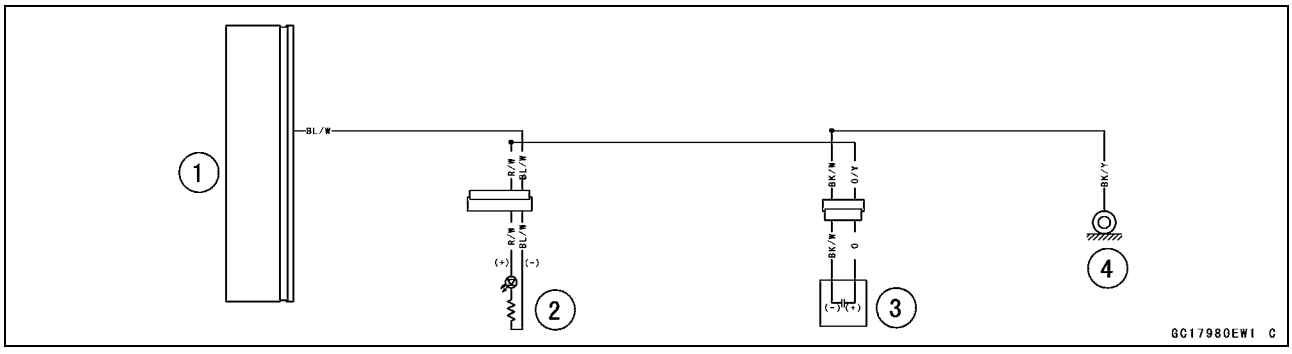

1. ECU
2. Orange FI Warning Indicator Light (LED)
3. Capacitor
4. Frame Ground 1

ECU

ECU Identification

○Most countries have their own regulations, so each ECU has different characteristic. So, do not confuse ECU with each other and use only the ECU for your model. Otherwise, the motorcycle cannot clear the regulation.

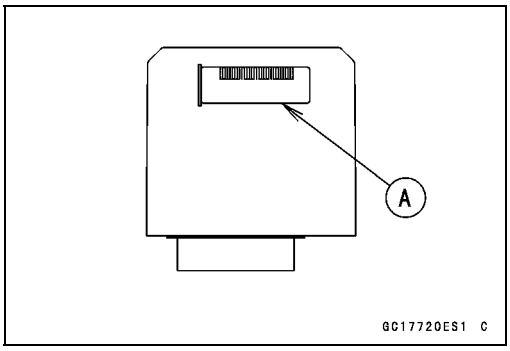

ECU Identification (KX450FC)

Part Number [A]	Specification
21175-0390	US, CA
21175-0391	AU, EUR
21175-0392	BR

ECU Identification (KX450FD)

Part Number [A]	Specification
21175-0801	US, CA
21175-0802	AU, EUR, TH
21175-0803	BR

ECU Identification (KX450FE)

Part Number [A]	Specification
21175-0882	US, CA
21175-0883	AU, EUR, TH
21175-0884	BR

ECU Removal

NOTICE
Never drop the ECU, especially on a hard surface. Such a shock to the ECU can damage it.

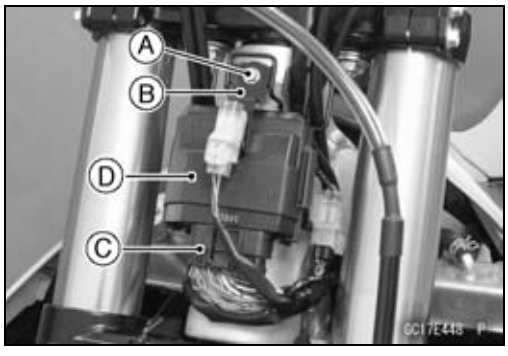

- Remove:
  Number Plate (see Number Plate Removal in the Frame chapter)
  Bolt [A]
  Connector Bracket [B]
- Disconnect the ECU connector [C].
- Pull the ECU [D] together with rubber protector.

ECU Installation

- Install the ECU [A] to the rubber protector [B].

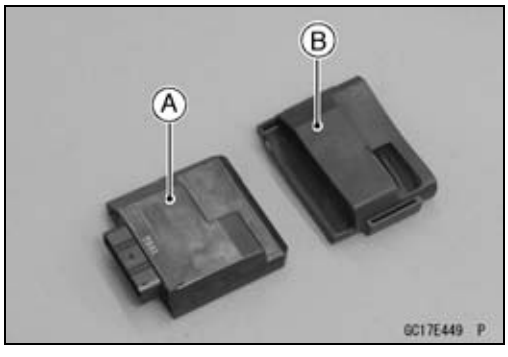

ECU

- Insert the slits [A] of the rubber protector to the ECU bracket.
- Connect the ECU connector [B].

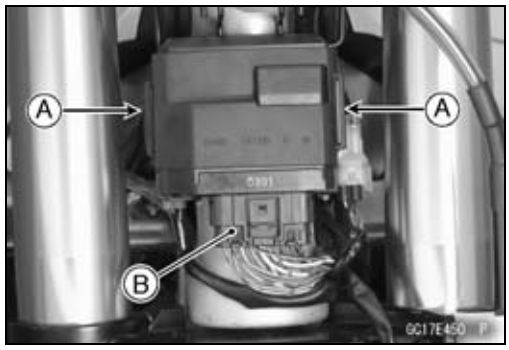

ECU Power Supply Inspection

- Remove the number plate (see Number Plate Removal in the Frame chapter).
- Visually inspect the ECU connector.

★If the connector is clogged with mud or dust, blow it off with compressed air.

- Remove the ECU (see ECU Removal).
- Visually inspect the terminals [A] of the ECU connectors.

★If the terminals of the main harness connector are damaged, replace the main harness.

★If the terminals of the ECU connector are damaged, replace the ECU.

- Disconnect the capacitor lead connector [A].

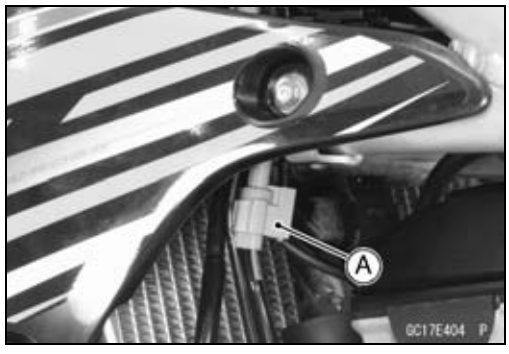

- Set a digital meter [A] and check the following wiring for continuity.

ECU Grounding Inspection
Capacitor Connector [B] (BK/W lead) ←→
ECU Connector [C]
BK/W lead [D] (ECU Terminal 8)
BK/Y lead [E] (ECU Terminal 35)
BK/Y lead [F] (ECU Terminal 36)
Criteria: 0 Ω

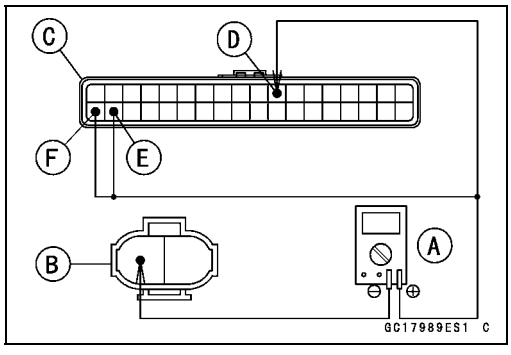

★If no continuity, check the connector or main harness, and repair or replace them if necessary.

★If the wiring is good, check the power supply voltage of the ECU.

NOTE

○*Be sure the battery is fully charged.*

- Connect the ECU connector.
- Refer to the Self-diagnosis Procedures, connect the 12 V battery to the main harness.

ECU

- Connect a digital meter [A] to the ECU connector [B] with the needle adapter set.

  Special Tool - Needle Adapter Set: 57001-1457

  ECU Power Supply Inspection

  Connections:

  Digital Meter (+) → R/W lead (ECU Terminal 1)

  Digital Meter (–) → Battery (–) Terminal

  Standard:

  When battery is not connected: DC 0 V

  When battery is connected: Battery Voltage

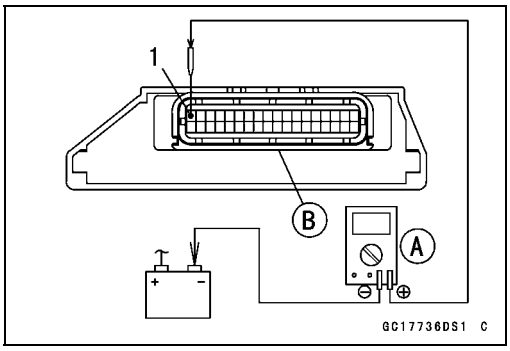

★If the reading is out of the specification, check the following.

Power Supply Wiring (see ECU Power Supply Circuit)

★If the wiring is good, replace the ECU (see ECU Removal/Installation).

ECU Power Supply Circuit

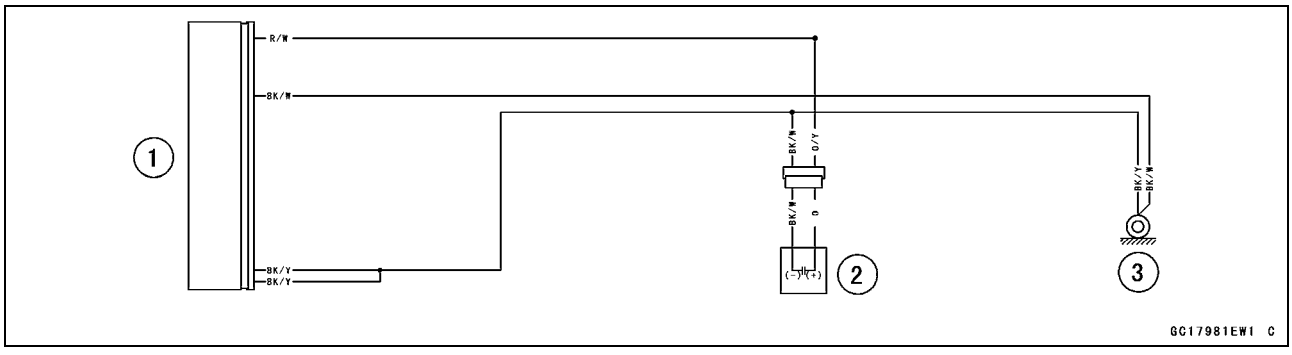

1. ECU
2. Capacitor
3. Frame Ground

Fuel Line

Fuel Pressure Inspection

NOTE

○*Be sure the battery is fully charged.*

- Remove:
  Radiator Shroud (see Radiator Shroud Removal in the Frame chapter)
  Fuel Tank (see Fuel Tank Removal)
  Fuel Hose (see Fuel Hose Replacement in the Periodic Maintenance chapter)

○Be sure to place a piece of cloth around the fuel outlet pipe of the fuel pump and the delivery pipe of the throttle body assy.

⚠ WARNING

Fuel is flammable and explosive under certain conditions and can cause severe burns. Be prepared for fuel spillage; any spilled fuel must be completely wiped up immediately. When the fuel hose is disconnected, fuel spills out from the hose and the pipe because of residual pressure. Cover the hose connection with a piece of clean cloth to prevent fuel spillage.

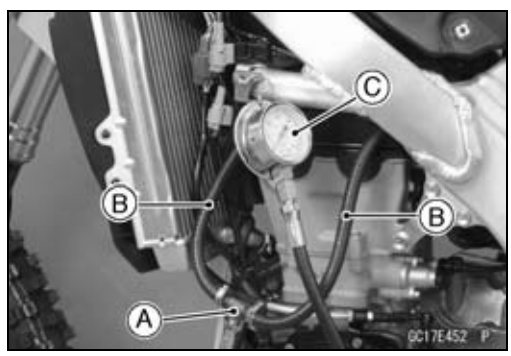

- Install the fuel pressure gauge adapter [A] and fuel hoses (Special Tool: 57001-1607) [B] between the fuel pump and the throttle body assy.
- Secure the fuel hoses with the clamps.
- Connect the pressure gauge [C] to the fuel pressure gauge adapter.

Special Tools - Oil Pressure Gauge, 5 kgf/cm²: 57001-125
Fuel Pressure Gauge Adapter: 57001-1593
Fuel Hose: 57001-1607

⚠ WARNING

Fuel is extremely flammable and can be explosive under certain conditions resulting in serious injury or death. Do not try to start the engine with the fuel hoses disconnected.

- Connect the fuel pump lead connector.
- Refer to the Self-diagnosis Procedures, connect the 12 V battery to the main harness.

NOTE

○*Inspect the fuel leakage from the connected portion of the special tools.*

NOTICE

Do not drive the fuel pump without the fuel in the fuel tank. If the fuel pump is driven without the fuel, it may be damaged.

Fuel Line

- Start the engine, and let it idle.
- Measure the fuel pressure with the engine idling.

Fuel Pressure
Standard: 294 kPa (3.00 kgf/cm², 43 psi) at engine idling

NOTE

○*The gauge needle will fluctuate. Read the pressure at the average of the maximum and minimum indications.*

- Stop the engine.

★If the fuel pressure is much higher than specified, replace the fuel pump because the fuel pressure regulator in the fuel pump have been clogged or stuck.

★If the fuel pressure is much lower than specified, check the following.
Fuel Line Leakage (see Injector Fuel Line Inspection)
Amount of Fuel Flow (see Fuel Flow Rate Inspection)

- After above checks, measure the fuel pressure again.
- Remove the fuel pressure gauge, hoses and adapter.
- Install the removed parts (see appropriate chapters).
- Start the engine and check for fuel leakage.

Fuel Flow Rate Inspection

⚠ WARNING

Gasoline is extremely flammable and can be explosive under certain conditions. Always stop the engine and do not smoke. Make sure the area is well-ventilated and free from any source of flame or sparks; this includes any appliance with a pilot light.

NOTE

○*Be sure the battery is fully charged.*

- Wait until the engine cools down.
- Prepare the fuel hose (Special Tool: 57001-1607) and a measuring cylinder.

Special Tool - Fuel Hose: 57001-1607

- Remove the fuel tank bolt and tank mounting band (see Fuel Tank Removal).
- Remove the left radiator shroud (see Radiator Shroud Removal in the Frame chapter).

Fuel Line

- Open the fuel tank cap [A] to lower the pressure in the tank.
- Disconnect the fuel hose from the fuel pump (see Fuel Tank Removal).

○Be sure to place a piece of cloth around the fuel outlet pipe of the fuel pump.

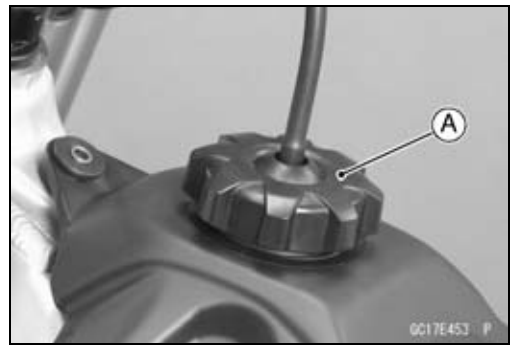

⚠ WARNING

Fuel is flammable and explosive under certain conditions and can cause severe burns. Be prepared for fuel spillage; any spilled fuel must be completely wiped up immediately. When the fuel hose is disconnected, fuel spills out from the hose and the pipe because of residual pressure. Cover the hose connection with a piece of clean cloth to prevent fuel spillage.

- Connect the prepared fuel hose [A] to the fuel outlet pipe.
- Secure the fuel hose with a clamp.
- Insert the fuel hose into the measuring cylinder [B].

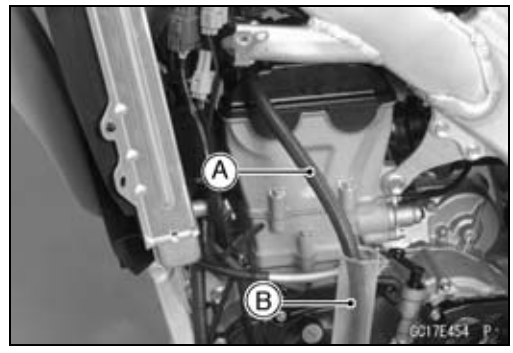

⚠ WARNING

Wipe off spilled out fuel immediately.
Be sure to hold the measuring cylinder vertical.

- Close the fuel tank cap.

- Refer to the Self-diagnosis Procedures, connect the 12 V battery to the main harness.

○Then the fuel pump operates and fuel is discharged.

NOTICE

Do not operate the fuel pump without fuel in the fuel tank. If the fuel pump is driven without fuel, it may be damaged.

- Measure the discharge for 5 seconds.

○Repeat this operation several times.

Amount of Fuel Flow
Standard: 40 mL (1.4 US oz.) or more for 5 seconds

★If the fuel flow is much less than the specified, replace the fuel pump (see Fuel Pump Removal/Installation).

- Install the fuel tank (see Fuel Tank Installation).
- Start the engine and check for fuel leakage.

Throttle Grip and Cable

If the throttle grip has excessive free play due to cable stretch or misadjustment, there will be a delay in throttle response. Also, the throttle valve may not open fully at full throttle. On the other hand, if the throttle grip has no play, the throttle will be hard to control, and the idle speed will be erratic. Check the throttle grip play periodically in accordance with the Periodic Maintenance Chart, and adjust the play if necessary.

The throttle cable routing is shown in Cable, Wire, and Hose Routing section in the Appendix chapter.

Throttle Grip (Throttle Cable) Free Play Inspection

- Refer to the Throttle Grip Free Play Inspection in the Periodic Maintenance chapter.

Throttle Grip (Throttle Cable) Free Play Adjustment

- Refer to the Throttle Grip Free Play Adjustment in the Periodic Maintenance chapter.

Throttle Cable Replacement

- Remove the front master cylinder (see Front Master Cylinder Removal in the Brakes chapter).
- Slide out the dust covers [A].
- Remove:
  Screws [B]
  Throttle Cable Housings [C]

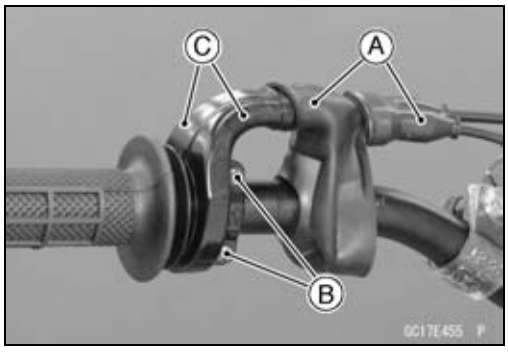

- Free the tips [A] from the grip [B].

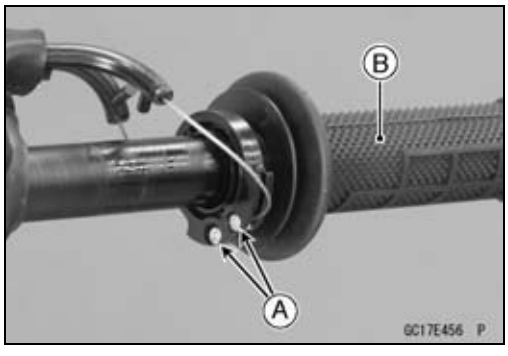

- Remove:
  Throttle Body Assy (see Throttle Body Assy Removal)
  Throttle Pulley Cover Bolts [A]
  Clamps (KX450FC)
  Throttle Pulley Cover [B]

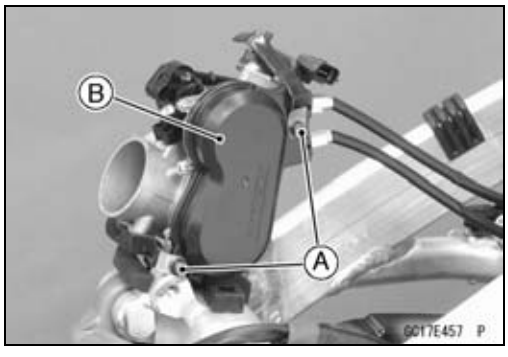

Throttle Grip and Cable

- Loosen the throttle cable mounting bolts [A].
- Take the cables [B] off the throttle body assy.
- Free the throttle cable tips [C] from the pulley.
- Remove the throttle cables.

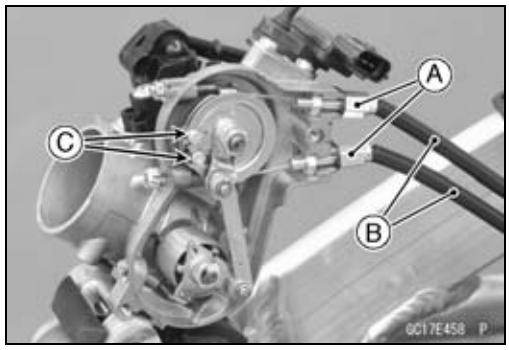

- Lubricate the throttle cables (see Lubrication in the Periodic Maintenance chapter).
- Apply grease to the throttle cable tips.
- Install:
  Throttle Cable Tips
  Throttle Cable Holders [A]

○The bent side [B] of the holders faces inside as shown in the figure.

- Tighten:

Torque - Throttle Cable Mounting Bolts: 3.5 N·m (0.36 kgf·m, 31 in·lb)

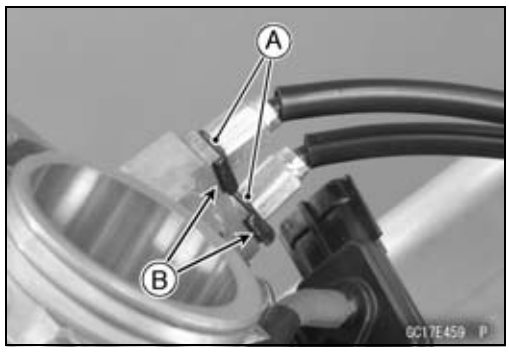

- Install:
  Throttle Pulley Cover
  Clamps (KX450FC)
- Tighten:

Torque - Throttle Pulley Cover Bolts: 3.4 N·m (0.35 kgf·m, 30 in·lb)

- Install the removed parts (see appropriate chapters).

- Install the throttle cables in accordance with the Cable, Wire, and Hose Routing section in the Appendix chapter.
- After the installation, adjust each cable properly (see Throttle Grip Free Play Adjustment in the Periodic Maintenance chapter).

⚠ WARNING

Operation with an improperly adjusted, incorrectly routed or damaged cables could result in an unsafe riding condition. Follow the service manual to make sure to correct any of these conditions.

Throttle Cable Lubrication

- Whenever the throttle cable is removed or in accordance with the Periodic Maintenance Chart, lubricate the these cables (see Lubrication in the Periodic Maintenance chapter).

○Apply a thin coating of grease to the cable upper end.
○Use a commercially available pressure cable lubricator to lubricate these cables.

Throttle Cable Inspection

- Refer to the Cable Inspection in the Periodic Maintenance chapter.

Throttle Body Assy

Idle Speed Inspection

- Refer to the Idle Speed Inspection in the Periodic Maintenance chapter.

Throttle Bore Cleaning

- Refer to the Throttle Body Cleaning in the Periodic Maintenance chapter.

Throttle Body Assy Removal

⚠ WARNING

Gasoline is extremely flammable and can be explosive under certain conditions. Always stop the engine and do not smoke. Make sure the area is well-ventilated and free from any source of flame or sparks; this includes any appliance with a pilot light.

NOTICE

Never drop the throttle body assy, especially on a hard surface. Such a shock to the throttle body assy can damage it.

- Remove:
  Fuel Tank (see Fuel Tank Removal)
  Fuel Hose (see Fuel Hose Replacement in the Periodic Maintenance chapter)
  Air Cleaner Housing with Rear Frame (see Rear Frame Removal in the Frame chapter)

KX450FC

- Disconnect:
  Intake Air Pressure Sensor Connector [A]
  Fuel Injector Connector [B]
- Open the clamp [C].

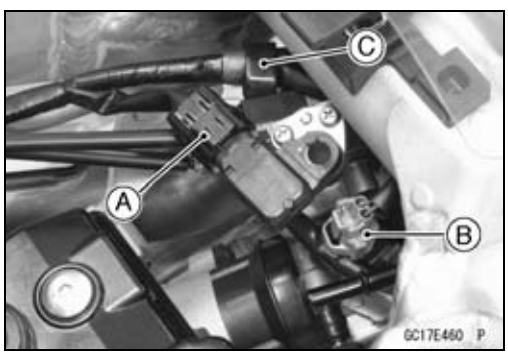

- Loosen the clamp screw [A].
- Open the clamp [B].

NOTE

○*Open the two clamps fully along the throttle body assy for easily removing.*

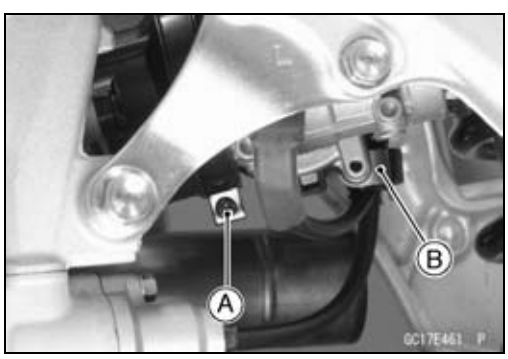

Throttle Body Assy

● Disconnect the throttle sensor connector [A].

KX450FD ~

● Disconnect:
Intake Air Pressure Sensor Connector [A]
Throttle Sensor Connector [B]
Fuel Injector Connector [C]

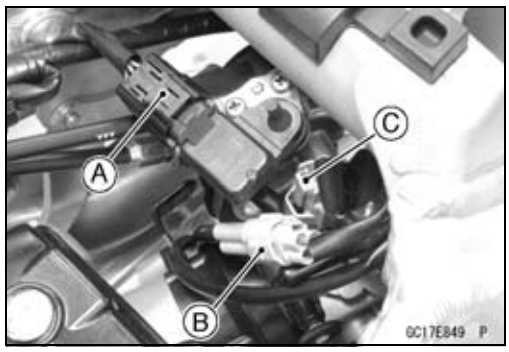

● Loosen the clamp screw [A].

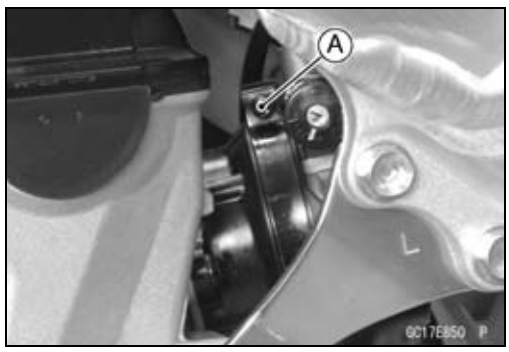

● Take the throttle body assy [A] off the engine as shown in the figure.
● Remove the throttle cable lower ends (see Throttle Cable Replacement).

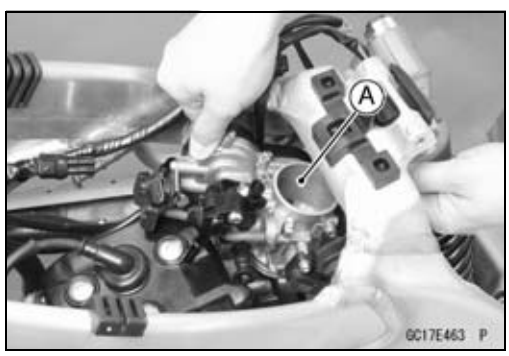

Throttle Body Assy Installation

● Install the throttle body assy.
○Engage the projection [A] and the hollow [B].
● Install the removed parts (see appropriate chapters).

NOTE

○*For easily starting the engine, connect the 12 V battery to the main harness (see Self-diagnosis Procedures).*
○*When the battery is connected, the fuel pump is driven and the pressure of the fuel line increases.*

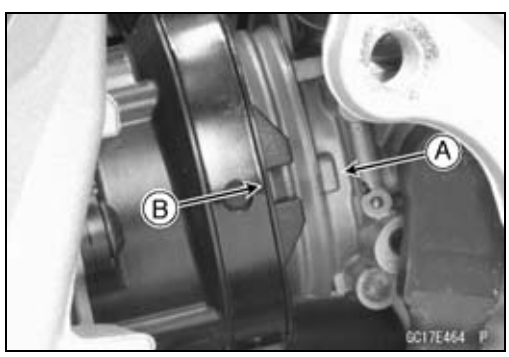

Throttle Body Assy

Throttle Body Assy Disassembly

- Remove:
  Throttle Body Assy (see Throttle Body Assy Removal)
  Plate Mounting Screws [A]
  Plate [B]
  Intake Air Pressure Sensor [C]

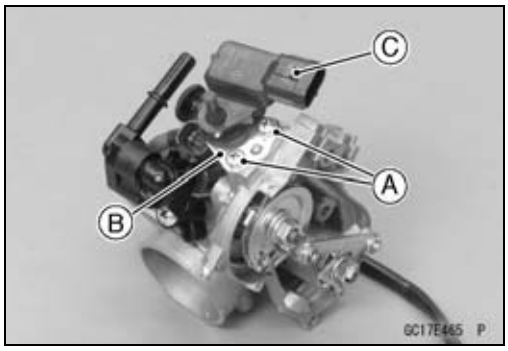

- Remove:
  Delivery Pipe Mounting Screw [A]
  Delivery Pipe [B] with Fuel Injector [C]

NOTE

○*Do not damage the insertion portion of the fuel injector when it is pulled out from the throttle body.*

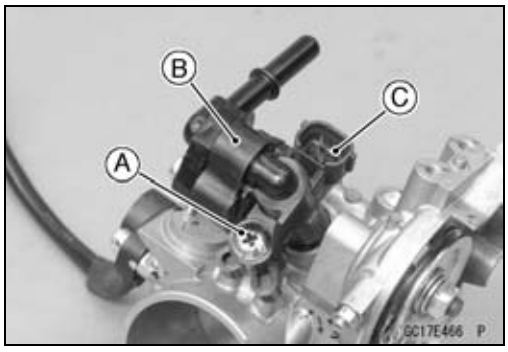

NOTICE
Never drop the fuel injector, especially on a hard surface. Such a shock to the injector can damage it.

- Separate the injector [A] and the delivery pipe [B].

NOTE

○*Do not damage the insertion portion of the fuel injector when it is pulled out from the delivery pipe.*

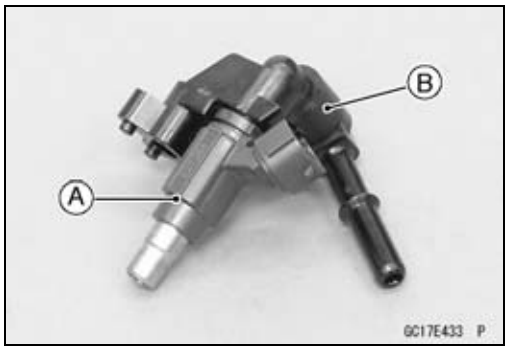

NOTICE
Never drop the fuel injector, especially on a hard surface. Such a shock to the injector can damage it.

- Remove:
  Screw [A]
  Delivery Pipe [B]
  Joint [C]

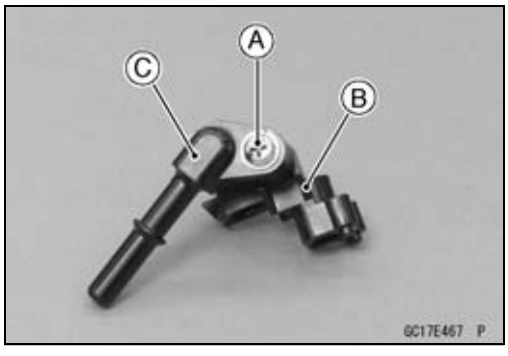

Throttle Body Assy

- Remove:
  Idle Adjusting Screw Assy [A]

NOTE

○*If necessary, refer to the Throttle Sensor Replacement and remove the throttle sensor [B].*

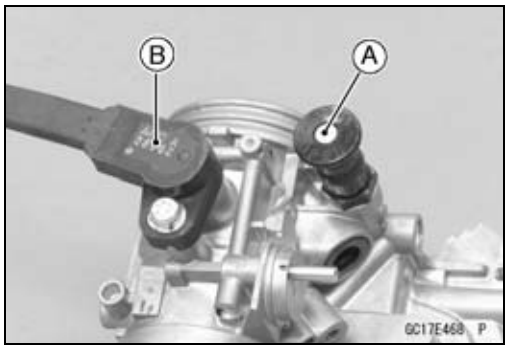

Throttle Body Assy Assembly

NOTE

○*If necessary, refer to the Throttle Sensor Replacement and install the throttle sensor.*

- Install:
  Idle Adjusting Screw Assy [A]

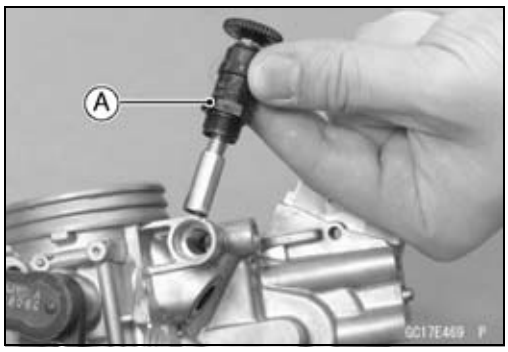

- Replace the O-ring [A] with a new one.
- Apply engine oil to the new O-ring.
- Install the O-ring and the joint [B] to the delivery pipe [C], and tighten the screw securely.

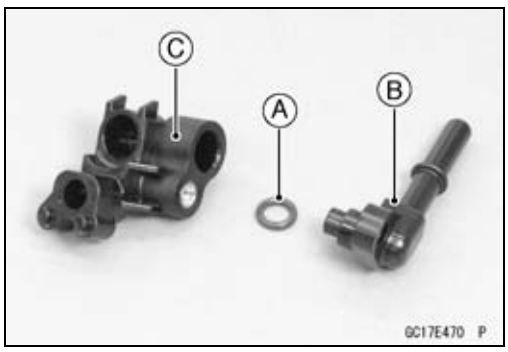

- Replace the fuel injector O-ring [A] and the dust seal [B] with new ones.
- Apply engine oil to the O-ring and dust seal.

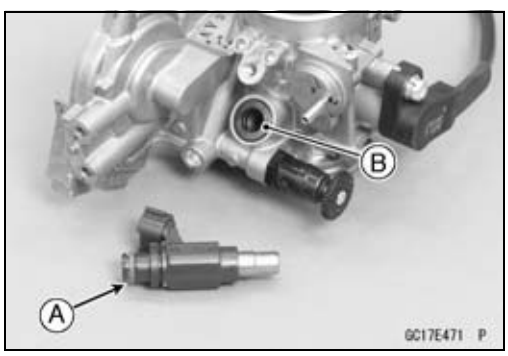

- Install the fuel injector [A] to the delivery pipe [B].

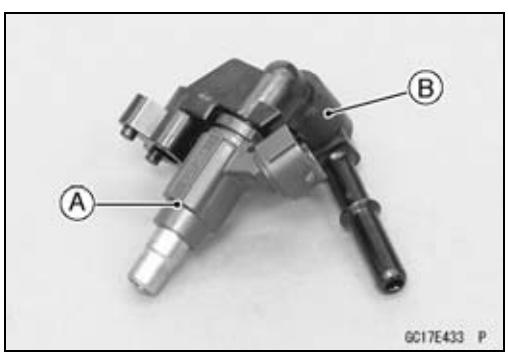

Throttle Body Assy

- Fit the delivery pipe projections [A] to the throttle body hollows [B].
- Tighten the delivery pipe mounting screw securely.

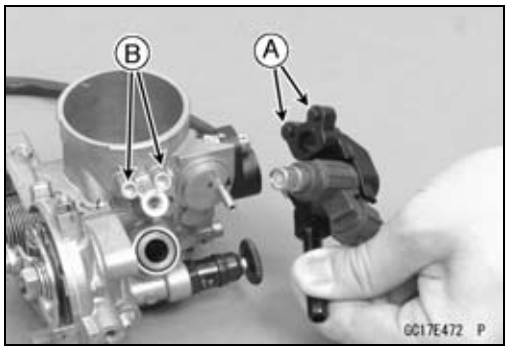

- Install the plate [A].
- Fit the hole [B] and the projection [C].
- Install the vacuum hose to the fitting [D].
- Tighten the plate mounting screws securely.
- Install the removed parts (see appropriate chapters).

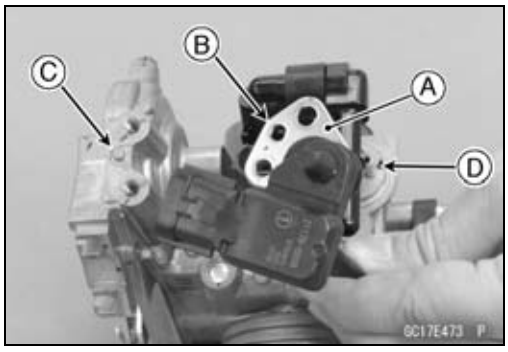

Air Cleaner

Air Cleaner Housing Removal

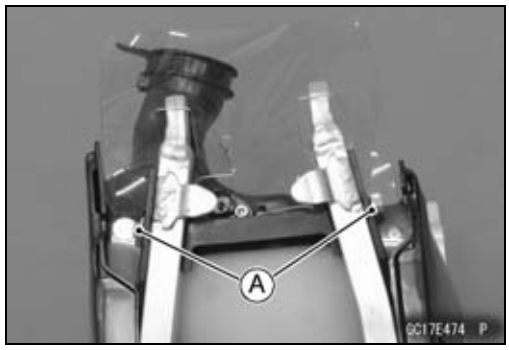

- Remove the rear frame (see Rear Frame Removal in the Frame chapter).
- Remove the air cleaner housing bolts [A].
- Take the air cleaner housing off the rear frame.

Air Cleaner Housing Installation

- When assembling the air cleaner housing refer to Exploded View section.

  Torque - Air Cleaner Duct Mounting Bolt: 3.0 N·m (0.31 kgf·m, 27 in·lb)
  Air Cleaner Duct Mounting Nuts: 3.0 N·m (0.31 kgf·m, 27 in·lb)

- Install the air cleaner element (see Air Cleaner Element Installation in the Periodic Maintenance chapter).

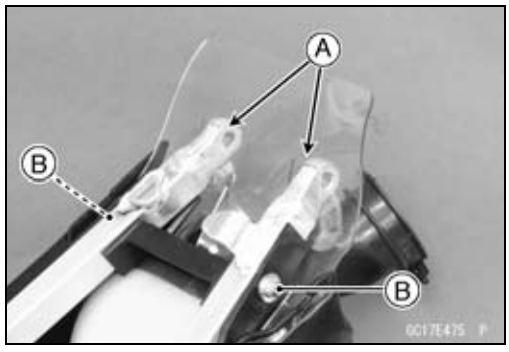

- Install the air cleaner housing to the rear frame.

○Insert the rear frame ends to the holes [A] of the guard.

- Tighten:

  Torque - Air Cleaner Housing Bolts [B]: 9.8 N·m (1.0 kgf·m, 87 in·lb)

- Install the rear frame (see Rear Frame Installation in the Frame chapter).

Element Removal/Installation

- Refer to the Air Cleaner Element Cleaning and Inspection in the Periodic Maintenance chapter.

Element Cleaning and Inspection

- Refer to the Air Cleaner Element Cleaning and Inspection in the Periodic Maintenance chapter.

Fuel Tank

Fuel Tank Removal

⚠ WARNING

Gasoline is extremely flammable and can be explosive under certain conditions. Always stop the engine and do not smoke. Make sure the area is well-ventilated and free from any source of flame or sparks; this includes any appliance with a pilot light.

- Remove:
  Seat (see Seat Removal in the Frame chapter)
  Radiator Shroud (see Radiator Shroud Removal in the Frame chapter)
  Fuel Tank Bolt [A]
  Band [B]

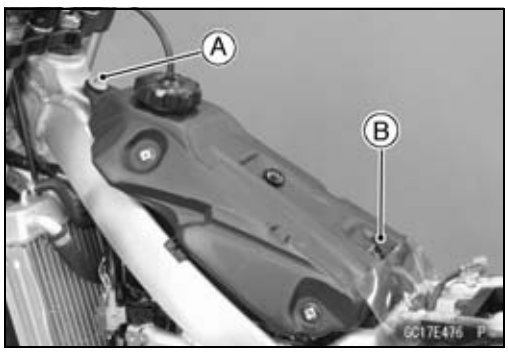

- Draw the fuel out from the fuel tank with a commercially available pump [A].
  ○Use a soft plastic hose [B] as a pump intake hose in order to insert the hose smoothly.
  ○Put the hose through the fill opening [C] into the tank and draw the fuel out.

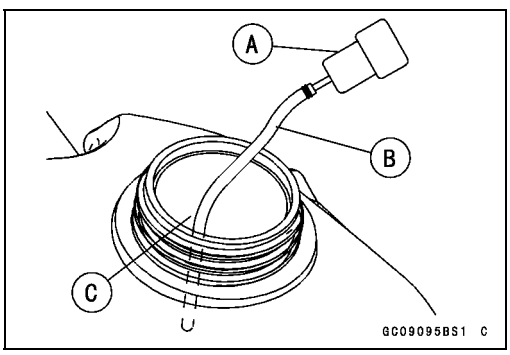

⚠ WARNING

Spilled fuel is flammable and can be explosive under certain conditions. The fuel can not be removed completely from the fuel tank. Be careful for remained fuel spillage.

- Lift up the fuel tank, and remove the fuel pump lead connector [A].

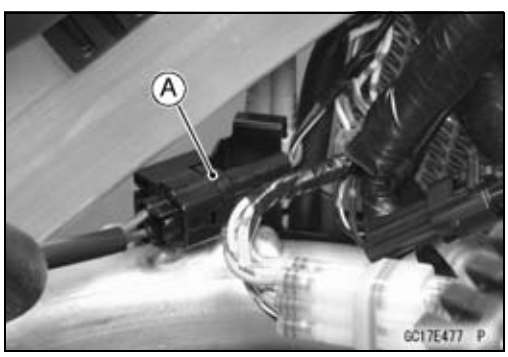

- Be sure to place a piece of cloth around the fuel hose joint.
- Wipe off the dirt of the surface [A] around the connection using a cloth or a soft brush.

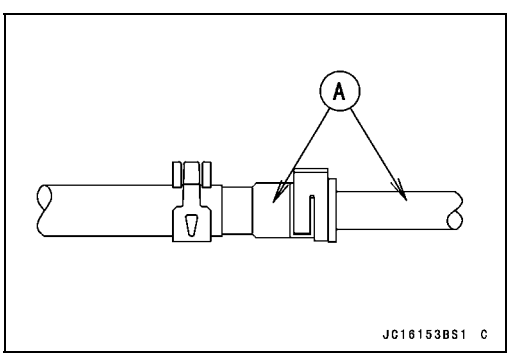

Fuel Tank

When removing with standard tip screwdriver:

- Insert the standard tip screwdriver [A] into the slit [B] on the joint lock [C].
- Turn the driver to disconnect the joint lock.

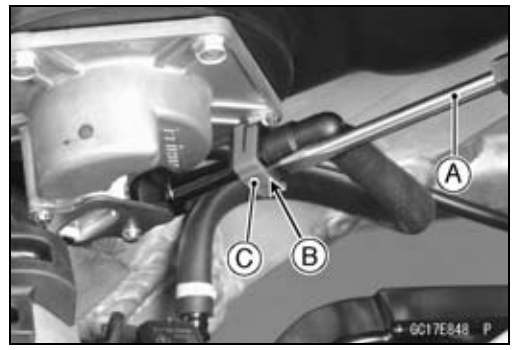

When removing with fingers:

- Open and push up [A] the joint lock [B] with your fingers.

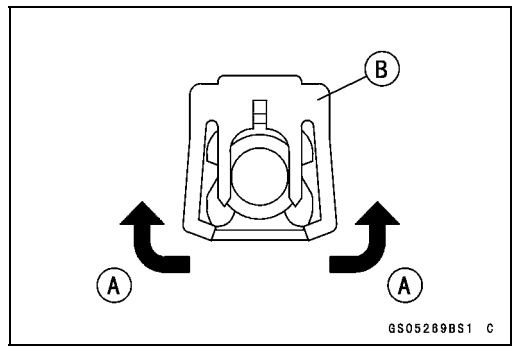

NOTICE

Prying or excessively widening the joint lock ends for fuel hose removal will permanently deform the joint lock, resulting in a loose or incomplete lock that may allow fuel to leak and create the potential for a fire explosion. To prevent fire or explosion from a damaged joint lock, do not pry or excessively widen the joint lock ends when removing the fuel hose. The joint lock has a retaining edge that locks around the housing.

- Pull [A] the fuel hose joint out of the fuel outlet pipe [B].

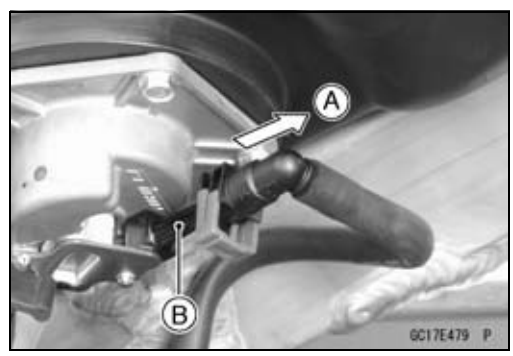

⚠ WARNING

Fuel is flammable and explosive under certain conditions and can cause severe burns. Be prepared for fuel spillage; any spilled fuel must be completely wiped up immediately. When the fuel hose is disconnected, fuel spills out from the hose and the pipe because of residual pressure. Cover the hose connection with a piece of clean cloth to prevent fuel spillage.

- Close the fuel tank cap.
- Remove the fuel tank, and place a it on a flat surface.

○Do not apply the load to the fuel outlet pipe of the fuel pump.

⚠ WARNING

Gasoline is extremely flammable and can be explosive under certain conditions, creating the potential for serious burns. Store the fuel tank in an area which is well-ventilated and free from any source of flame or sparks. Do not smoke in this area. Place the fuel tank on a flat surface and plug the fuel pipes to prevent fuel leakage.

- Clean the pipe [A].
- Cover the pipe and hose joint [B] with the vinyl bags [C] to keep them clean.

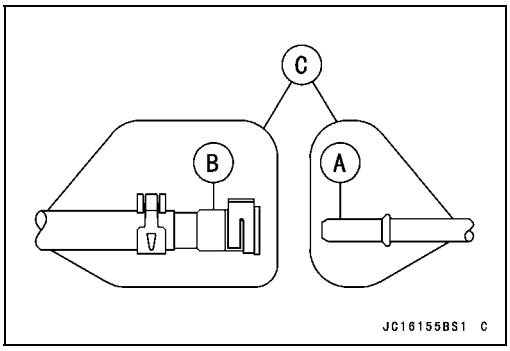

Fuel Tank Installation

- Note the above WARNING (see Fuel Tank Removal).
- Run the hoses correctly (see Cable, Wire, and Hose Routing section in the Appendix chapter).
- Check that the dampers [A] are in place on the frame.

★If the dampers are damaged or deteriorated, replace it.

○Using a high flash-point solvent, clean any oil or dirt that may be on the adhesive cement coating area. Dry them with a clean cloth.

★If necessary, apply adhesive cement to the underside of the dampers, and stick them.

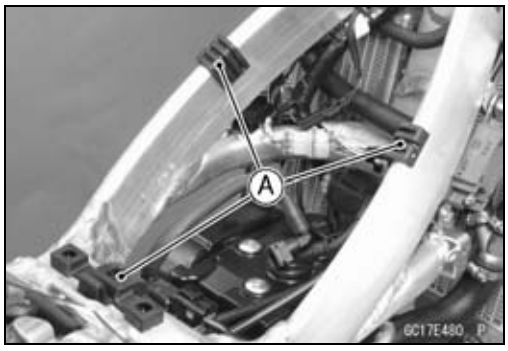

- Remove the vinyl bags on the pipe and hose joint.
- Check that there are no flaws, burrs, and adhesion of foreign materials on fuel outlet pipe [A].
- Check the joint lock for deformation and wear.
- If the joint lock is deformed, replace the fuel hose with a new one.

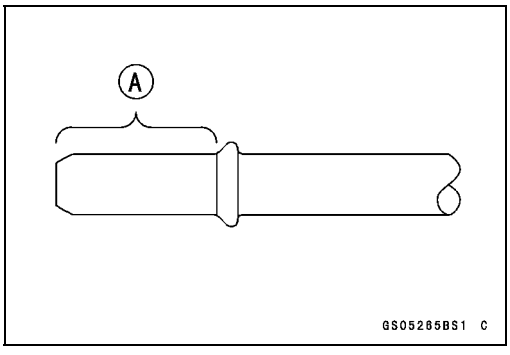

- Apply engine oil to the fuel outlet pipe [A] lightly.

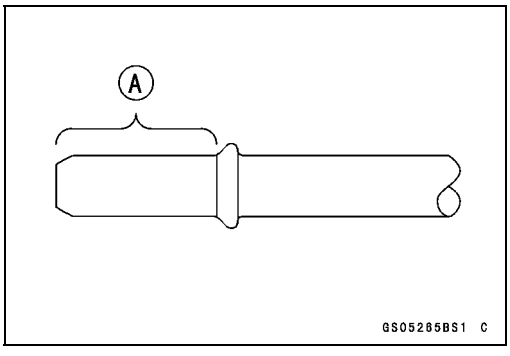

Fuel Tank

- Insert the fuel hose joint [A] straight onto the fuel outlet pipe until the hose joint clicks.
- Push the joint lock [B].
- Push and pull [C] the fuel hose joint back and forth more than two times, and make sure it is locked and does not come off.

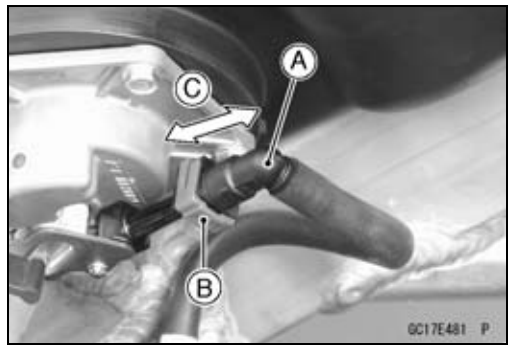

⚠ WARNING

Leaking fuel can cause a fire or explosion resulting in serious burns. Make sure the hose joint is installed correctly on the delivery pipe by sliding the joint.

★If it comes off, reinstall the hose joint.
- Connect the fuel pump lead connector.

KX450FC
- Before installing the fuel tank, check that both throttle cables [A] run over the black connector [B].

○To prevent the bottom of the fuel tank from pushing the throttle cables, run the throttle cables over the black connector correctly.

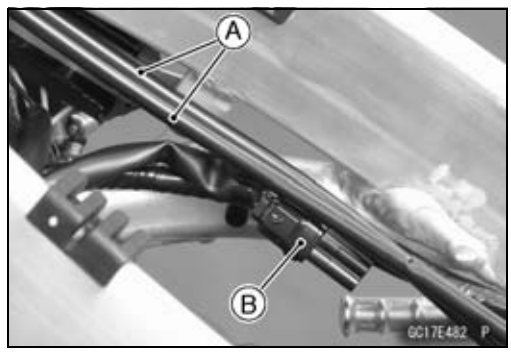

- Hook the band to the fuel tank.
- Tighten the fuel tank mounting bolt.
- After installing the fuel tank, make sure that both throttle cables [A] (outer) move slightly by pulling them back and forth in the upper space of the right side of the fuel tank. Check that both throttle cables run under the frame (right side) [B] as shown in the figure.

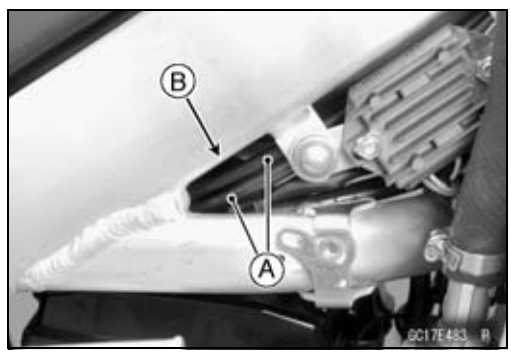

- Install the removed parts (see appropriate chapters).

○Insert the fuel tank breather hose into the steering stem hole.

NOTE

○*For easily starting the engine, connect the 12 V battery to the main harness (see Self-diagnosis Procedures).*

○*When the battery is connected, the fuel pump is driven and the pressure of the fuel line increases.*

Fuel Tank Cleaning

- Refer to the Fuel Tank Cleaning in the Periodic Maintenance chapter.

Cooling System

Table of Contents

Exploded View 4-2
Specifications 4-4
Special Tools 4-5
Coolant 4-6
- Coolant Level Inspection 4-6
- Coolant Deterioration Inspection 4-6
- Coolant Draining 4-6
- Coolant Filling 4-7
- Air Bleeding 4-7
- Cooling System Pressure Testing 4-8
- Cooling System Flushing 4-8

Water Pump 4-9
- Water Pump Cover Removal 4-9
- Water Pump Cover Installation 4-9
- Impeller Removal 4-10
- Impeller Installation 4-10
- Water Pump Inspection 4-10
- Oil Seal and Bearing Removal 4-10
- Oil Seal and Bearing Installation 4-11

Radiator 4-12
- Radiator Removal 4-12
- Radiator Installation 4-13
- Radiator Inspection 4-13
- Radiator Cap Inspection 4-14
- Filler Neck Inspection 4-14
- Water Hoses and Overflow Hose Inspection 4-14
- Water Hoses and Overflow Hose Installation 4-14

Exploded View

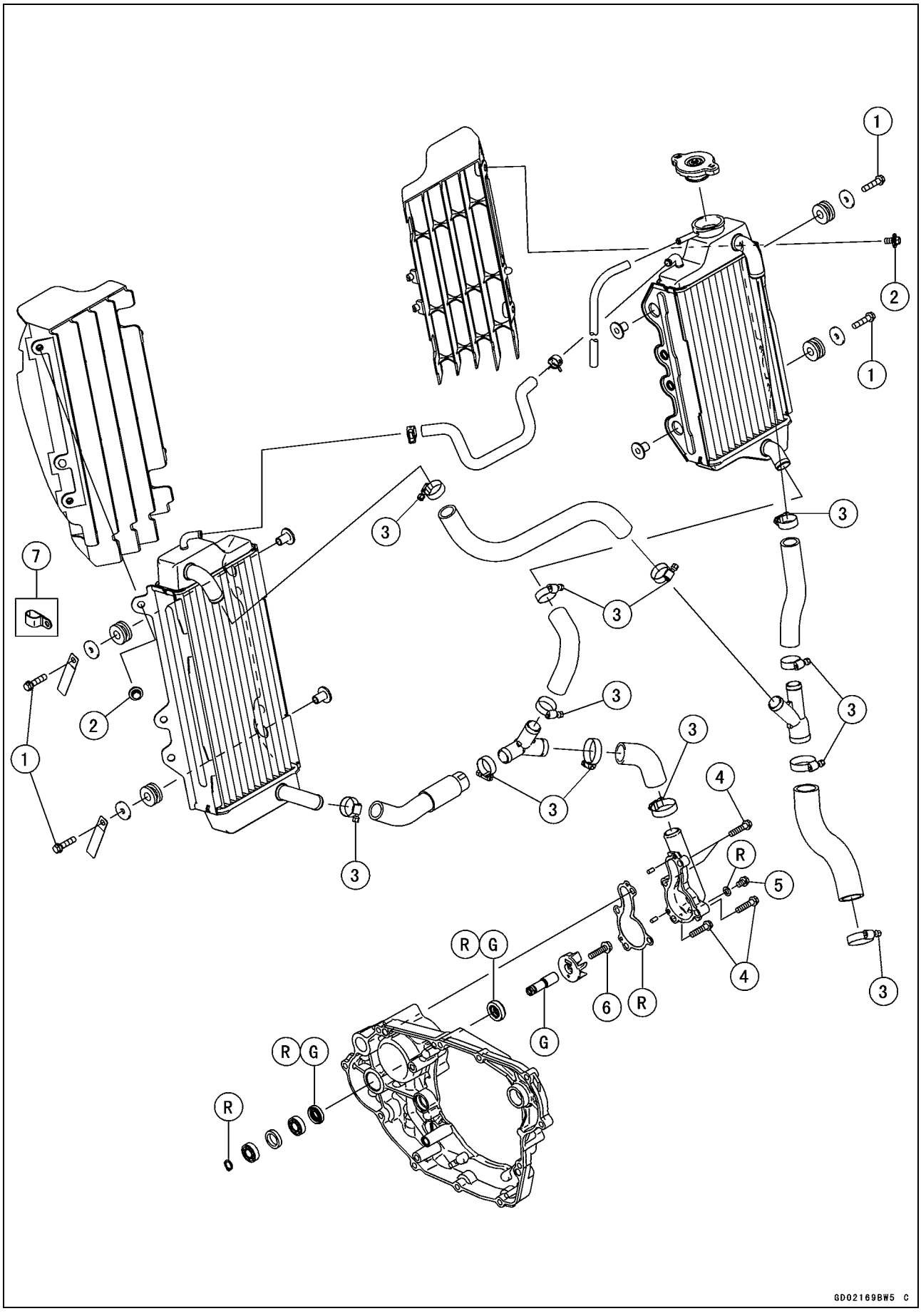

Exploded View

No.	Fastener	Torque			Remarks
		N·m	kgf·m	ft·lb	
1	Radiator Mounting Bolts	9.8	1.0	87 in·lb	
2	Radiator Screen Bolts	9.8	1.0	87 in·lb	
3	Water Hose Clamp Screws	3.0	0.31	27 in·lb	
4	Water Pump Cover Bolts	9.8	1.0	87 in·lb	
5	Coolant Drain Bolt	7.0	0.71	62 in·lb	
6	Water Pump Impeller Bolt	9.8	1.0	87 in·lb	

7. KX450FC
G: Apply grease.
R: Replacement Parts

Specifications

Item	Standard
Recommended Coolant	
Type	Permanent type antifreeze (soft water and ethylene glycol plus corrosion and rust inhibitor chemicals for aluminum engines and radiators)
Color	Green
Mixed Ratio	Soft water 50%, coolant 50%
Freezing Point	–35°C (–31°F)
Total Amount	1.1 L (1.2 US qt)
Radiator	
Radiator Cap Relief Pressure	93 ~ 123 kPa (0.95 ~ 1.25 kgf/cm², 13 ~ 18 psi)

Special Tools

Outside Circlip Pliers:
57001-144

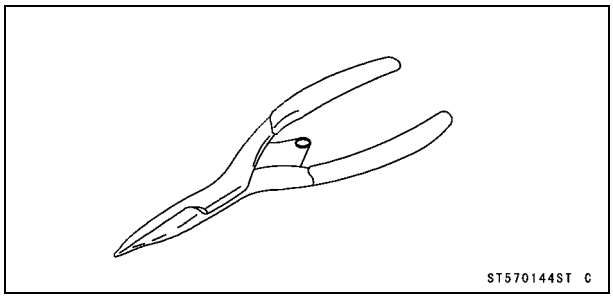

Bearing Driver Set:
57001-1129

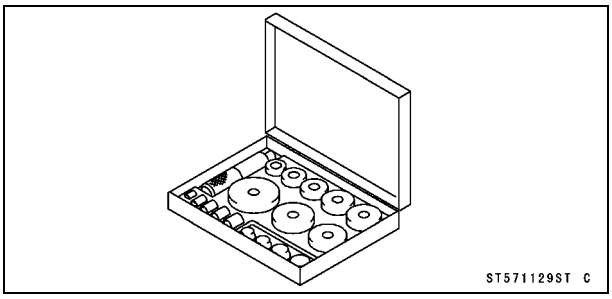

Coolant

Coolant Level Inspection

- Refer to the Coolant Level Inspection in the Periodic Maintenance chapter.

Coolant Deterioration Inspection

- Refer to the Coolant Deterioration Inspection in the Periodic Maintenance chapter.

Coolant Draining

⚠ WARNING

Coolant can be extremely hot and cause severe burns, is toxic and very slippery. Do not remove the radiator cap or attempt to change the coolant when the engine is hot; allow it cool completely. Immediately wipe any spilled coolant from tires, frame, engine or other painted parts. Do not ingest coolant.

NOTICE

The coolant should be changed periodically to ensure long engine life.

- Remove the radiator cap [A].

NOTE

○*Remove the radiator cap in two steps. First turn the cap counterclockwise to the first stop and wait there for a few seconds. Then push down and turn it further in the same direction and remove the cap.*

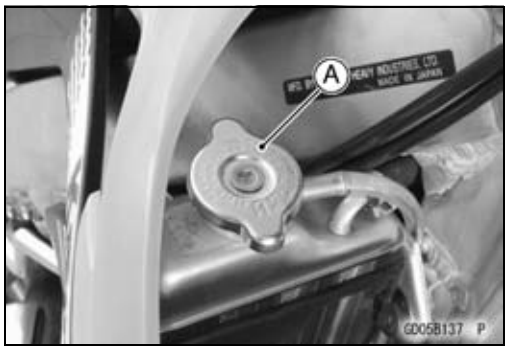

- Remove:
  Bolt [A]
  Right Engine Guard [B]
- Place a container under the coolant drain bolt [C].
- Remove the drain bolt to drain the coolant.
- Inspect the old coolant (see Coolant Deterioration Inspection in the Periodic Maintenance chapter).

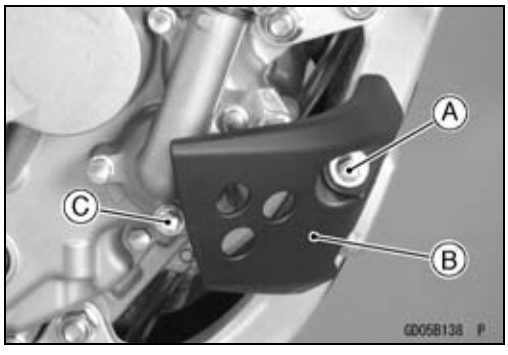

Coolant

Coolant Filling

NOTICE
Use coolant containing corrosion inhibitors made specifically for aluminum engines and radiators in accordance with the instruction of the manufacture's. Soft or distilled water must be used with the antifreeze (see below for antifreeze) in the cooling system. If hard water is used in the system, it causes scale accumulation in the water passages, and considerably reduces the efficiency of the cooling system.

Recommended Coolant

Type:	**Permanent type antifreeze (soft water and ethylene glycol plus corrosion and rust inhibitor chemicals for aluminum engines and radiators)**
Color:	**Green**
Mixed Ratio:	**Soft water 50%, coolant 50%**
Freezing Point:	**−35°C (−31°F)**
Total Amount	**1.1 L (1.2 US qt)**

- Replace the drain bolt gasket with a new one.
- Tighten:

Torque - Coolant Drain Bolt: 7.0 N·m (0.71 kgf·m, 62 in·lb)

- Fill the radiator up to the bottom of the radiator filler neck [A] with coolant [B], and install the cap.

○Lean the motorcycle slightly so that the filler neck is located uppermost in order to exhaust the air accumulated in the radiator.

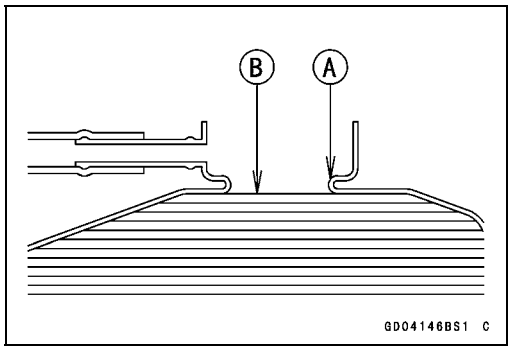

NOTE

○*Pour in the coolant slowly so that it can expel the air from the engine and radiator.*

○*The radiator cap must be installed in two steps. First turn the cap clockwise to the first stop. Then push down on it and turn it the rest of the way.*

- Check the cooling system for leaks.

Air Bleeding

- Start the engine, warm up the engine thoroughly, and then stop the engine.
- Wait until the engine cools down.
- Remove the radiator cap.
- Check the coolant level (see Coolant Level Inspection in the Periodic Maintenance chapter).

★If the coolant level is low, add coolant up to the bottom of the filler neck.

- Install the radiator cap.
- Check the cooling system for leaks.

Coolant

Cooling System Pressure Testing

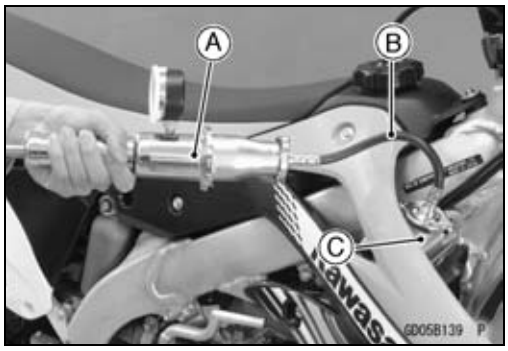

NOTICE
During pressure testing, do not exceed the pressure for which the system is designed to work. The maximum pressure is 123 kPa (1.25 kgf/cm², 18 psi).

- Remove the radiator cap, and install a cooling system pressure tester [A] and adapter [B] on the radiator filler neck [C].

NOTE

○*Wet the adapter cap sealing surfaces with water or coolant to prevent pressure leaks.*

- Build up pressure in the system carefully until the pressure reaches 123 kPa (1.25 kgf/cm², 18 psi).
- Watch the gauge for at least 6 seconds.

★If the pressure holds steady, the cooling system is all right.

★If the pressure drops and no external source is found, check for internal leaks. Check the cylinder head gasket for leaks.

- Remove the pressure tester, replenish the coolant, and install the radiator cap.

Cooling System Flushing

Over a period of time, the cooling system accumulates rust, scale, and lime in the water jacket and radiator. When this accumulation is suspected or observed, flush the cooling system. If this accumulation is not removed, it will clog up the water passages and considerably reduce the efficiency of the cooling system.

- Drain the cooling system (see Coolant Draining).
- Fill the cooling system with fresh water mixed with a flushing compound.

NOTICE
Avoid the use of a flushing compound which is harmful to the aluminum engine and radiators. Carefully follow the instructions supplied by the manufacture of the cleaning product.

- Warm up the engine, and run it at normal operating temperature for about 10 minutes.
- Stop the engine, and drain the cooling system after the coolant cools down.
- Fill the system with fresh water.
- Warm up the engine and drain the system after the coolant cools down.
- Repeat the previous two steps once more.
- Fill the system with a permanent type coolant, and bleed the air from the system (see Air Bleeding).

Water Pump

Water Pump Cover Removal

- Drain the coolant (see Coolant Draining).
- Loosen the clamp screw [A], and disconnect the water hose [B] from the water pump cover.
- Remove the cover bolts [C].

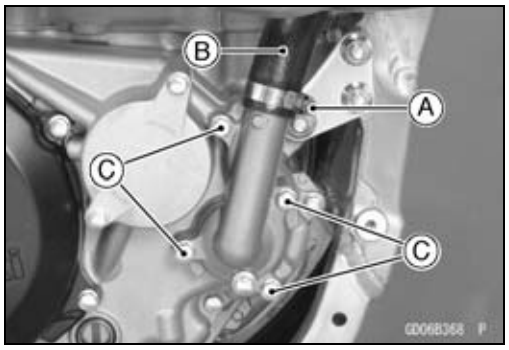

- Using the pry points [A], remove the pump cover [B].

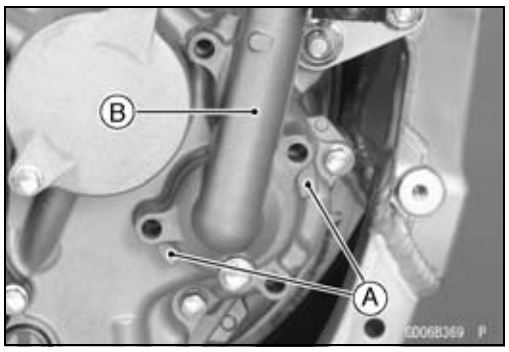

Water Pump Cover Installation

- Replace the pump cover gasket [A] with a new one.
- Check to see that the dowel pins [B] are in place in the mating surface of the right engine cover.

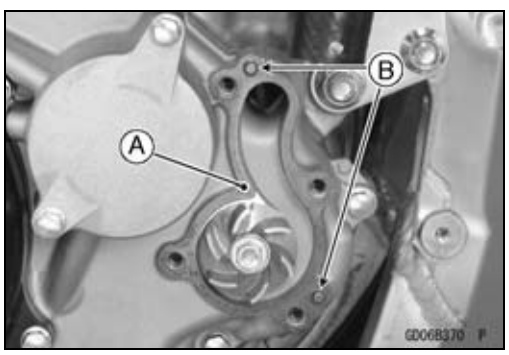

- Install the water pump cover [A].
- Replace the drain bolt gasket with a new one.
- Tighten:

  Torque - Water Pump Cover Bolts [B]: 9.8 N·m (1.0 kgf·m, 87 in·lb)
  Coolant Drain Bolt [C]: 7.0 N·m (0.71 kgf·m, 62 in·lb)

- Insert the water hose [D] into the water pump cover.
- Tighten:

  Torque - Water Hose Clamp Screw [E]: 3.0 N·m (0.31 kgf·m, 27 in·lb)

- Fill the coolant (see Coolant Filling).
- Bleed the air from the coolfing system (see Air Bleeding).

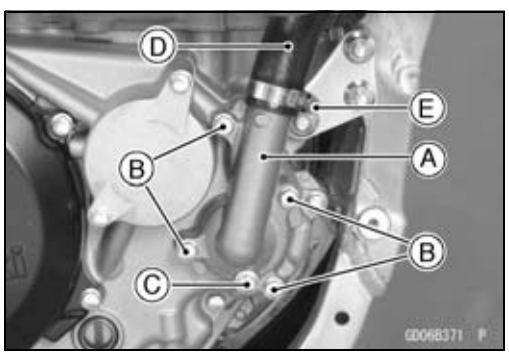

Water Pump

Impeller Removal

- Remove:
  Water Pump Cover (see Water Pump Cover Removal)
  Impeller Bolt [A]
  Impeller [B]

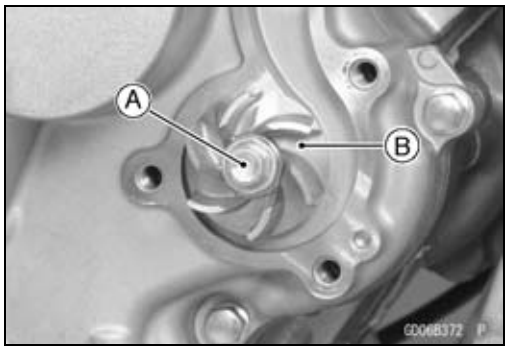

Impeller Installation

- Install:
  Impeller [A]
- Tighten:

Torque - Water Pump Impeller Bolt [B]: 9.8 N·m (1.0 kgf·m, 87 in·lb)

- Install:
  Water Pump Cover (see Water Pump Cover Installation)

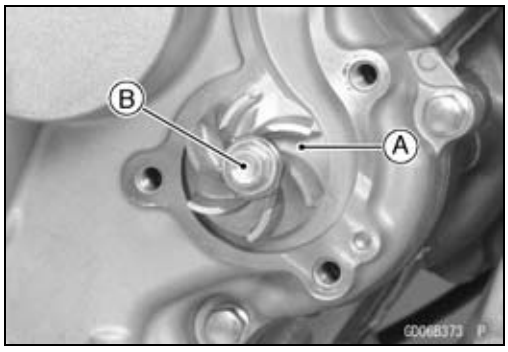

Water Pump Inspection

- Visually check the impeller [A].

★If the surface is corroded, or if the blades [B] are damaged, replace the impeller.

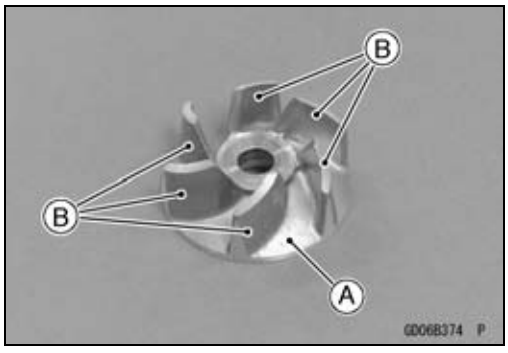

- Check the drainage outlet passage [A] at the bottom of the right engine cover for coolant leaks.

★If the oil seal is damaged, the coolant leaks through the seal and drains through the passage. Replace the oil seal.

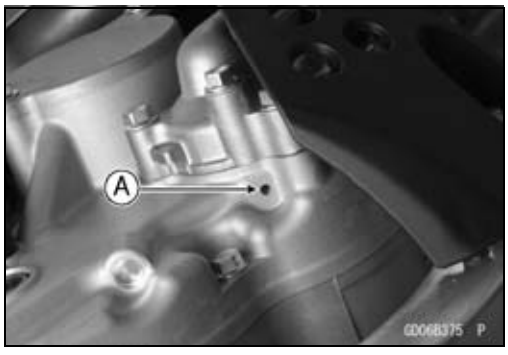

Oil Seal and Bearing Removal

- Remove:
  Impeller (see Impeller Removal)
  Right Engine Cover (see Right Engine Cover Removal in the Clutch chapter)
  Circlip [A]
  Water Pump Shaft [B]

Special Tool - Outside Circlip Pliers: 57001-144

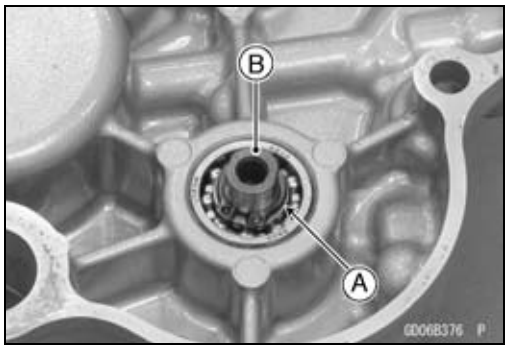

Water Pump

- Insert a bar [A] into the water pump shaft hole from the outside of the right engine cover, and remove the ball bearing [B] by tapping [C] evenly around the bearing inner race.
- Remove the spacer [D].
- Remove the ball bearing [E] and oil seal [F] from the right engine cover in the same way as ball bearing removal.

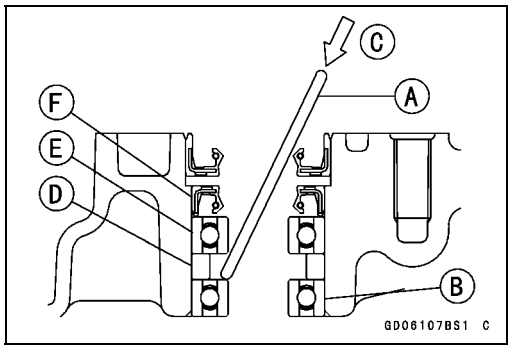

- Insert a bar [A] into the water pump shaft hole from the inside of the right engine cover, and remove the oil seal [B] by tapping [C] evenly around the seal lips.

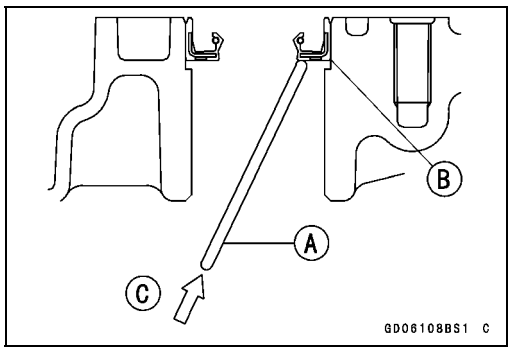

Oil Seal and Bearing Installation

NOTICE
If the oil seal or ball bearing is removed, replace all of them with new ones at the same time

- Replace the oil seals with new ones.
- Apply plenty of grease to the oil seal lips.
- Press in the new oil seal [A] using a bearing driver set from the outside of the right engine cover so that the seal bottom surface is flush with the end face [B] of the right engine cover.
- Press in the new oil seal [C] using a bearing driver set from the outside of the right engine cover so that the oil seal surface is flush [D] with the surface of the right engine cover.

  Special Tool - Bearing Driver Set: 57001-1129

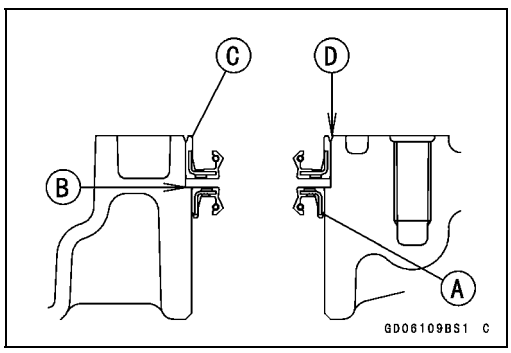

- Press the ball bearings [A] together with the spacer [B] into the hole until the face of the bearing is even [C] with the end of the hole.

  Special Tool - Bearing Driver Set: 57001-1129
- Install the water pump shaft.
- Replace the circlip with a new one.
- Fit the circlip into the groove of the water pump shaft securely.

  Special Tool - Outside Circlip Pliers: 57001-144
- Install the removed parts (see appropriate chapters).

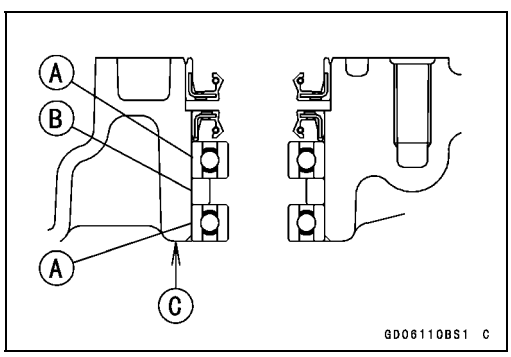

Radiator

Radiator Removal

- Drain the coolant (see Coolant Draining).
- Remove:
  Radiator Shrouds (see Radiator Shroud Removal in the Frame chapter)

- Loosen:
  Clamp Screws [A]
- Remove:
  Clamp [B]
  Water Hoses [C]
  Bolt [D]
  Left Radiator Screen [E]

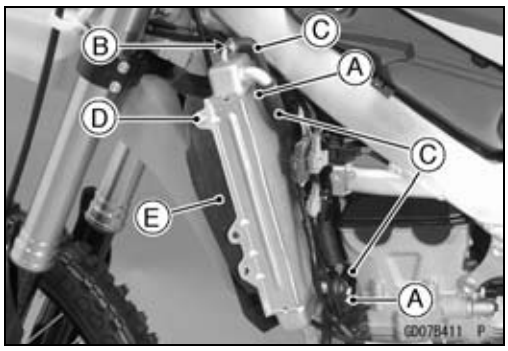

- Remove:
  Radiator Mounting Bolts [A], Clutch Cable Clamps and Washers
  Left Radiator [B]

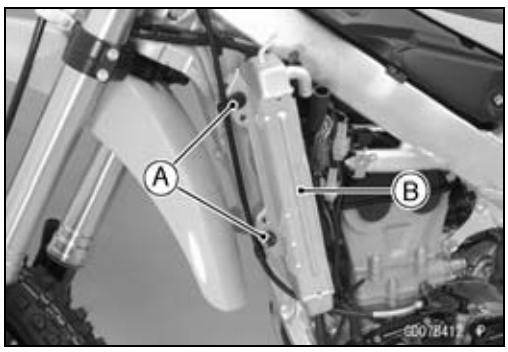

- Loosen:
  Clamp Screws [A]
- Remove:
  Water Hoses [B]
  Bolt [C]
  Right Radiator Screen [D]

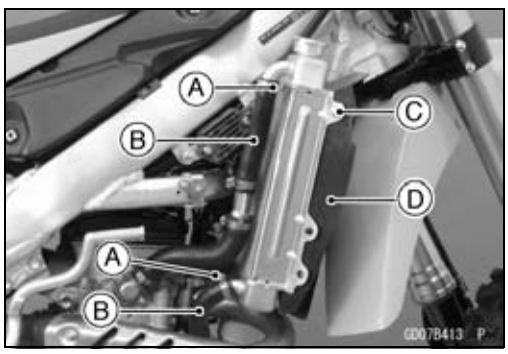

- Remove:
  Radiator Mounting Bolts [A] and Washers
  Right Radiator [B]

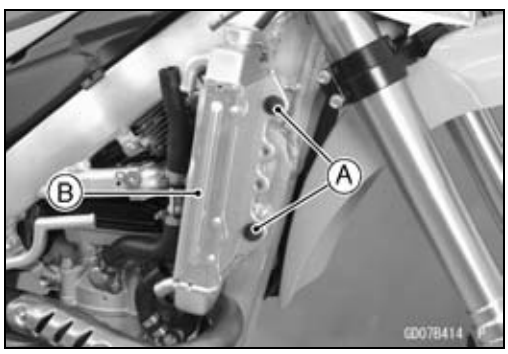

Radiator

Radiator Installation

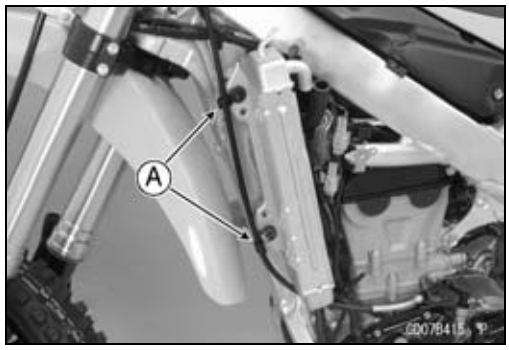

- Install:
  Radiators
  Washers
  Clutch Cable Clamps [A] (Left Side)
- Tighten:

  Torque - Radiator Mounting Bolts: 9.8 N·m (1.0 kgf·m, 87 in·lb)

- Run the hoses correctly (see Cable, Wire, and Hose Routing section in the Appendix chapter).
- Tighten:

  Torque - Water Hose Clamp Screws: 3.0 N·m (0.31 kgf·m, 27 in·lb)

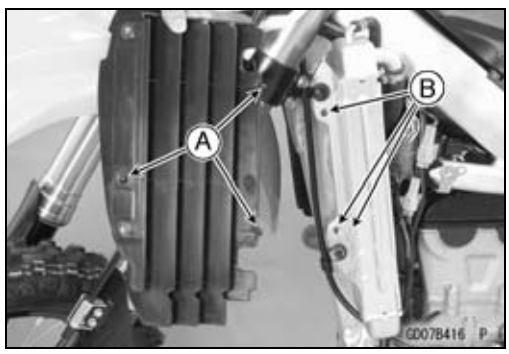

- Install the radiator screens on both sides.

○Fit the projections [A] and the holes [B].

- Tighten:

  Torque - Radiator Screen Bolts: 9.8 N·m (1.0 kgf·m, 87 in·lb)

- Fill the coolant (see Coolant Filling).
- Install the removed parts (see appropriate chapters).

Radiator Inspection

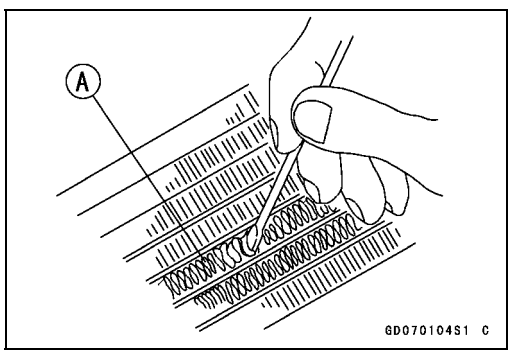

- Check the radiator core.

★If there are obstructions to air flow, remove them.

★If the corrugated fins [A] are deformed, carefully straighten them with the standard tip screwdriver.

NOTICE
Do not tear the radiator tubes while straightening the fins.

★If the air passages of the radiator core are blocked more than 20% by unremovable obstructions or irreparably deformed fins, replace the radiator with a new one.

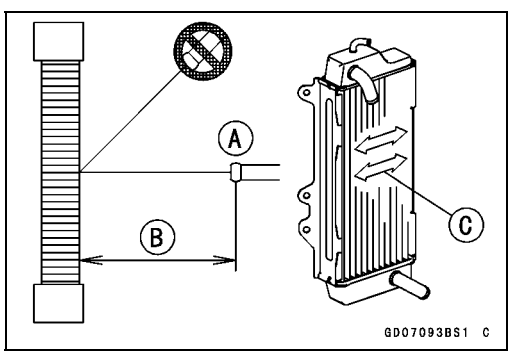

NOTICE
When cleaning the radiator with steam cleaner, be careful of the following to prevent radiator damage. Keep the steam gun [A] away more than 0.5 m (1.64 ft) [B] from the radiator core. Hold the steam gun perpendicular to the core surface. Run the steam gun following the core fin direction [C].

Radiator

Radiator Cap Inspection

- Check the condition of the valve spring [A], and the top and bottom valve seals [B] of the radiator cap.

★If any one of them shows visible damage, replace the cap.

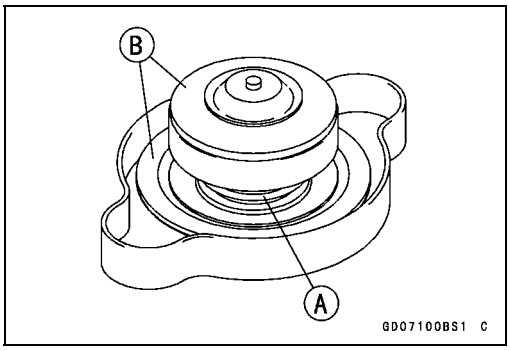

- Wet the top and bottom valve seals with water or coolant to prevent pressure leaks.
- Install the cap [A] on a cooling system pressure tester [B].
- Watching the pressure gauge, slowly pump the pressure tester to build up the pressure. The gauge hand must remain within the relief pressure range in the table below at least 6 seconds. Continue to pump the tester until the relief valve opens, indicated by the gauge hand flicking downward. The relief valve must open within the specified range.

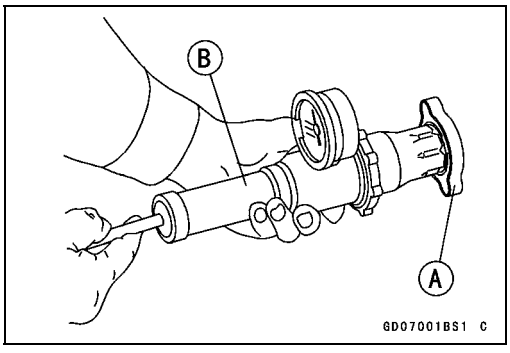

Radiator Cap Relief Pressure
Standard: 93 ~ 123 kPa (0.95 ~ 1.25 kgf/cm², 13 ~ 18 psi)

★If the cap cannot hold the pressure, or if the relief pressure is too high or too low, replace the cap with a new one.

Filler Neck Inspection

- Check the radiator filler neck for signs of damage.
- Check the condition of the top and bottom sealing seats [A] in the filler neck. They must be smooth and clean for the radiator cap to function properly.

Water Hoses and Overflow Hose Inspection

- Refer to the Water Hoses and Connections Inspection in the Periodic Maintenance chapter.

Water Hoses and Overflow Hose Installation

- Install the water hoses or overflow hose being careful to follow the performed bends (see Cable, Wire, and Hose Routing section in the Appendix chapter). Avoid sharp bending, kinking, flattening, or twisting.
- Tighten the hose clamps securely.

Torque - Water Hose Clamp Screws: 3.0 N·m (0.31 kgf·m, 27 in·lb)

Engine Top End

Table of Contents

Exploded View 5-2
Specifications 5-6
Special Tools and Sealant 5-9
Cylinder Head Cover 5-12
Cylinder Head Cover Removal 5-12
Cylinder Head Cover Installation . 5-12
Camshaft Chain Tensioner 5-14
Camshaft Chain Tensioner Removal 5-14
Camshaft Chain Tensioner Installation 5-14
Camshafts 5-16
Camshaft Removal 5-16
Camshaft Installation 5-17
Camshaft Chain Removal 5-20
Camshaft Chain Installation 5-20
Camshaft and Camshaft Cap Wear Inspection 5-20
Camshaft Runout Inspection..... 5-21
Cam Wear Inspection 5-21
Cylinder Head 5-22
Cylinder Compression Measurement 5-22
Cylinder Head Removal 5-23
Cylinder Head Installation 5-24
Cylinder Head Cleaning 5-25
Cylinder Head Warp Inspection ... 5-25
Valves 5-26
Valve Clearance Inspection 5-26
Valve Clearance Adjustment..... 5-26
Valve Removal 5-26
Valve Installation 5-27
Valve Guide Removal 5-27
Valve Guide Installation 5-28
Valve/Valve Guide Clearance Measurement (Wobble Method) 5-29
Valve Seat Inspection 5-29
Valve Seat Repair 5-30
Cylinder and Piston 5-34
Cylinder Removal..... 5-34
Piston Removal..... 5-34
Cylinder and Piston Installation.... 5-34
Cylinder Wear Inspection..... 5-36
Piston Wear Inspection 5-36
Piston/Cylinder Clearance Inspection..... 5-36
Piston Ring/Ring Groove Clearance Inspection 5-37
Piston Ring Groove Width Inspection..... 5-37
Piston Ring Thickness Inspection 5-37
Piston Ring End Gap Measurement 5-38
Piston, Piston Pin, Connecting Rod Wear Inspection..... 5-38
Throttle Body Holder..... 5-39
Throttle Body Assy Holder Removal 5-39
Throttle Body Assy Holder Installation 5-39
Muffler..... 5-40
Muffler Body Removal..... 5-40
Exhaust Pipe Removal..... 5-40
Muffler Installation..... 5-40
Silencer Wool Replacement..... 5-40

Exploded View

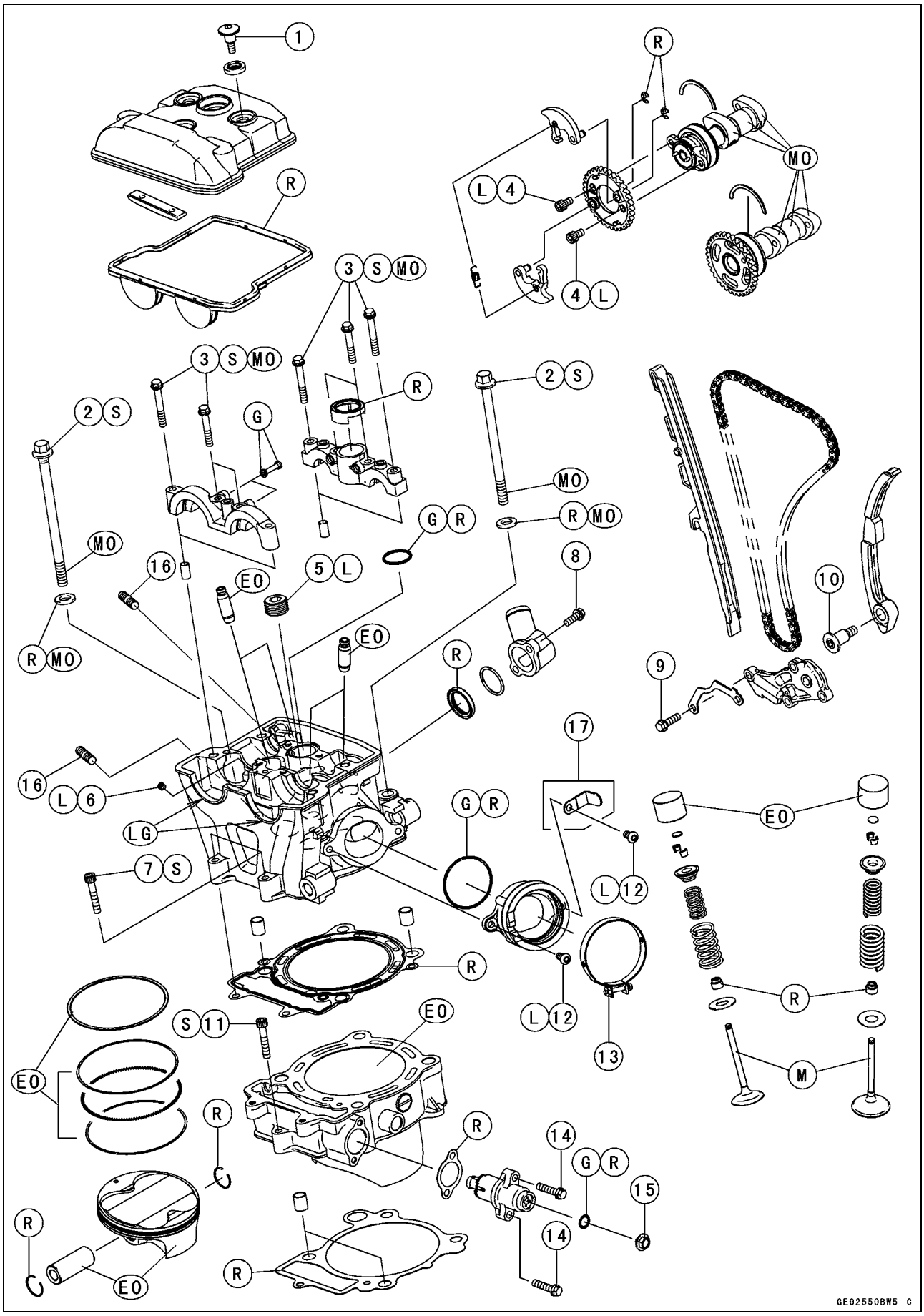

Exploded View

No.	Fastener	Torque			Remarks
		N·m	kgf·m	ft·lb	
1	Cylinder Head Cover Bolts	9.8	1.0	87 in·lb	
2	Cylinder Head Bolts (M10)	59	6.0	44	MO, S
3	Camshaft Cap Bolts	9.8	1.0	87 in·lb	MO, S
4	Camshaft Sprocket Bolts	12	1.2	106 in·lb	L
5	Plug	20	2.0	15	L
6	Oil Line Plug	3.0	0.31	27 in·lb	L
7	Cylinder Head Bolts (M6)	12	1.2	106 in·lb	S
8	Water Hose Fitting Bolts	9.8	1.0	87 in·lb	
9	Oil Pump (Scavenge) Cover Bolts	9.8	1.0	87 in·lb	
10	Rear Camshaft Chain Guide Bolt	15	1.5	11	
11	Cylinder Bolt	12	1.2	106 in·lb	S
12	Throttle Body Assy Holder Screws	9.8	1.0	87 in·lb	L
13	Throttle Body Assy Clamp Screw	2.0	0.20	18 in·lb	
14	Camshaft Chain Tensioner Mounting Bolts	9.8	1.0	87 in·lb	
15	Camshaft Chain Tensioner Cap Bolt	5.0	0.51	44 in·lb	

16. Face the round end outward.
17. KX450FD ~

EO: Apply engine oil.
G: Apply grease.
L: Apply a non-permanent locking agent.
LG: Apply liquid gasket.
M: Apply molybdenum disulfide grease.
MO: Apply molybdenum disulfide oil solution.
(mixture of the engine oil and molybdenum disulfide grease in a weight ratio 10:1)
R: Replacement Parts
S: Follow the specified tightening sequence.

Exploded View

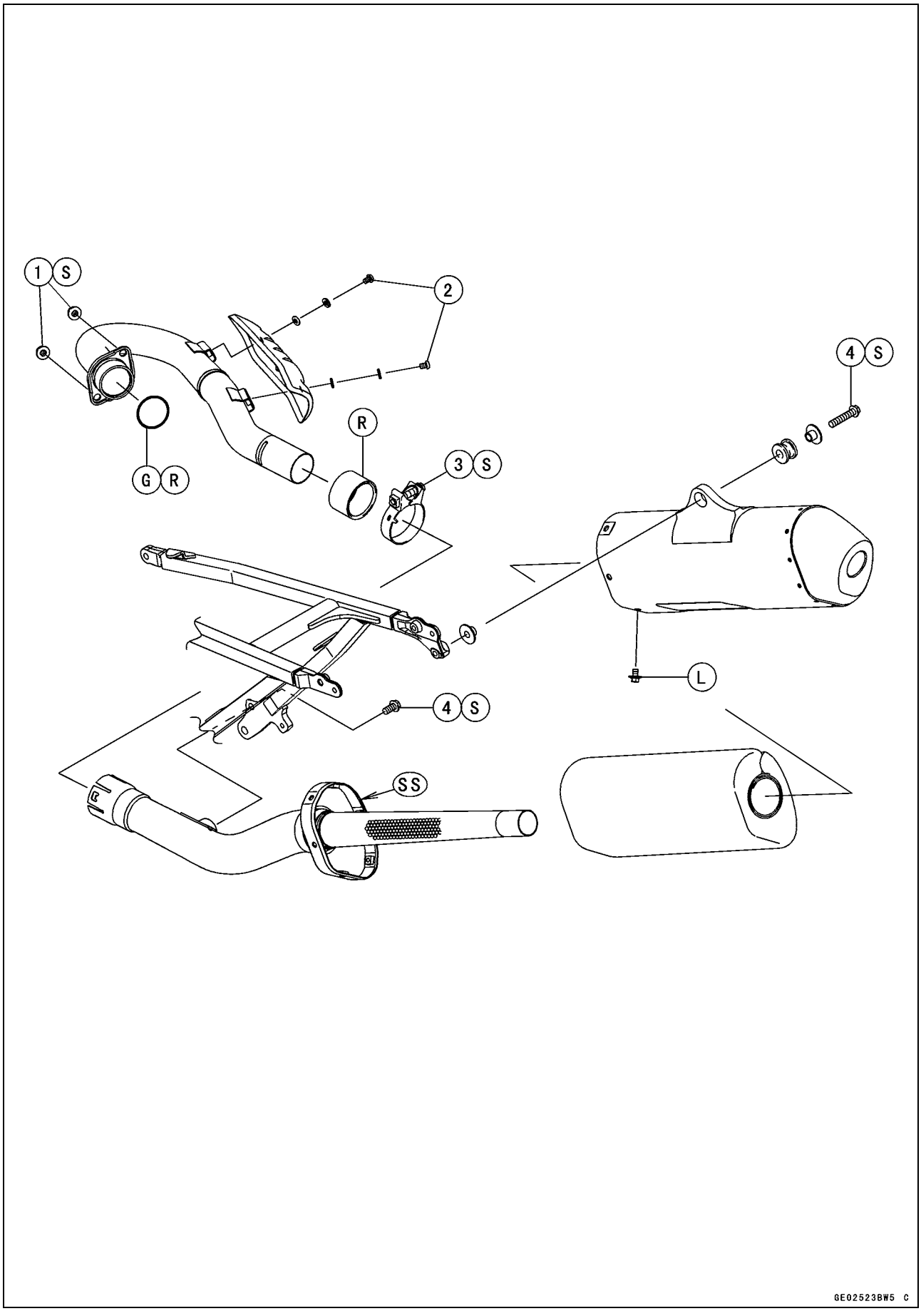

Exploded View

No.	Fastener	Torque			Remarks
		N·m	kgf·m	ft·lb	
1	Exhaust Pipe Holder Nuts	20	2.0	15	S
2	Exhaust Pipe Cover Bolts	12	1.2	106 in·lb	
3	Muffler Clamp Bolt	16.5	1.68	12.2	S
4	Muffler Mounting Bolts	20	2.0	15	S

G: Apply grease.
L: Apply a non-permanent locking agent.
R: Replacement Parts
S: Follow the specified tightening sequence.
SS: Apply silicone sealant.

Specifications

Item	Standard	Service Limit
Camshafts		
Cam Height:		
Exhaust	36.943 ~ 37.057 mm (1.4544 ~ 1.4589 in.)	36.84 mm (1.450 in.)
Intake:		
KX450FC	38.143 ~ 38.257 mm (1.5017 ~ 1.5062 in.)	38.04 mm (1.498 in.)
KX450FD ~	37.743 ~ 37.857 mm (1.4859 ~ 1.4904 in.)	37.64 mm (1.482 in.)
Camshaft Journal/Camshaft Cap Clearance	0.020 ~ 0.062 mm (0.0008 ~ 0.0024 in.)	0.15 mm (0.0059 in.)
Camshaft Journal Diameter	22.959 ~ 22.980 mm (0.9039 ~ 0.9047 in.)	22.93 mm (0.9028 in.)
Camshaft Journal Inside Diameter	23.000 ~ 23.021 mm (0.9055 ~ 0.9063 in.)	23.08 mm (0.9087 in.)
Camshaft Runout	TIR 0.02 mm (0.0008 in.) or less	TIR 0.1 mm (0.004 in.)
Cylinder Head		
Cylinder Compression	(Usable Range) 420 ~ 698 kPa (4.3 ~ 7.1 kgf/cm², 61 ~ 101 psi) at 5 times	– – –
Cylinder Head Warp	– – –	0.05 mm (0.002 in.)
Valves		
Valve Clearance:		
Exhaust	0.17 ~ 0.22 mm (0.0067 ~ 0.0087 in.)	– – –
Intake	0.10 ~ 0.15 mm (0.0039 ~ 0.0059 in.)	– – –
Valve Stem Bend	TIR 0.01 mm (0.0004 in.) or less	TIR 0.05 mm (0.002 in.)
Valve Stem Diameter:		
Exhaust	5.455 ~ 5.470 mm (0.2148 ~ 0.2154 in.)	5.44 mm (0.214 in.)
Intake	5.465 ~ 5.480 mm (0.2152 ~ 0.2157 in.)	5.45 mm (0.215 in.)
Valve Guide Inside Diameter:		
Exhaust	5.500 ~ 5.512 mm (0.2165 ~ 0.2170 in.)	5.58 mm (0.220 in.)
Intake	5.500 ~ 5.512 mm (0.2165 ~ 0.2170 in.)	5.58 mm (0.220 in.)
Valve/Valve Guide Clearance (Wobble Method):		
Exhaust	0.08 ~ 0.15 mm (0.0032 ~ 0.0059 in.)	0.32 mm (0.013 in.)
Intake	0.05 ~ 0.12 mm (0.0020 ~ 0.0047 in.)	0.30 mm (0.012 in.)
Valve Seat Cutting Angle	32°, 45°, 55°	– – –

Specifications

Item	Standard	Service Limit
Valve Seat Surface:		
Outside Diameter:		
Exhaust	30.4 ~ 30.6 mm (1.197 ~ 1.205 in.)	– – –
Intake	35.4 ~ 35.6 mm (1.394 ~ 1.402 in.)	– – –
Width:		
Exhaust	0.8 ~ 1.2 mm (0.03 ~ 0.05 in.)	– – –
Intake	0.5 ~ 1.0 mm (0.02 ~ 0.04 in.)	– – –
Valve Spring Free Length:		
Exhaust:		
Outer	38.92 mm (1.532 in.)	37.5 mm (1.48 in.)
Inner	35.66 mm (1.404 in.)	34.2 mm (1.35 in.)
Intake:		
Outer	39.28 mm (1.546 in.)	37.8 mm (1.49 in.)
Inner	36.05 mm (1.419 in.)	34.5 mm (1.36 in.)
Cylinder, Piston		
Cylinder Inside Diameter	96.025 ~ 96.037 mm (3.7805 ~ 3.7810 in.)	96.12 mm (3.784 in.)
Piston Diameter	95.970 ~ 95.980 mm (3.7783 ~ 3.7787 in.)	95.82 mm (3.772 in.)
Piston/Cylinder Clearance	0.045 ~ 0.067 mm (0.0018 ~ 0.0026 in.)	– – –
Piston Ring/Ring Groove Clearance:		
Top	0.04 ~ 0.08 mm (0.002 ~ 0.003 in.)	0.18 mm (0.0071 in.)
Piston Ring Groove Width:		
Top	0.83 ~ 0.85 mm (0.0327 ~ 0.0335 in.)	0.93 mm (0.037 in.)
Piston Ring Thickness:		
Top	0.77 ~ 0.79 mm (0.030 ~ 0.031 in.)	0.70 mm (0.028 in.)
Piston Ring End Gap:		
Top	0.23 ~ 0.33 mm (0.0091 ~ 0.0130 in.)	0.6 mm (0.02 in.)
Oil	0.15 ~ 0.50 mm (0.0059 ~ 0.0197 in.)	0.8 mm (0.03 in.)
Piston Pin Diameter	18.991 ~ 19.000 mm (0.74768 ~ 0.74803 in.)	18.96 mm (0.7465 in.)
Piston Pin Hole Diameter	19.004 ~ 19.010 mm (0.74819 ~ 0.74842 in.)	19.08 mm (0.7512 in.)
Connecting Rod Small End Inside Diameter	19.019 ~ 19.030 mm (0.74878 ~ 0.74921 in.)	19.07 mm (0.7508 in.)

Specifications

Valve Stem Diameter

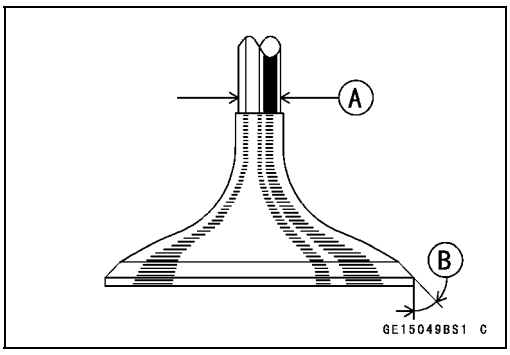

Valve Stem Diameter [A]
45° [B]

Valve Stem Bend

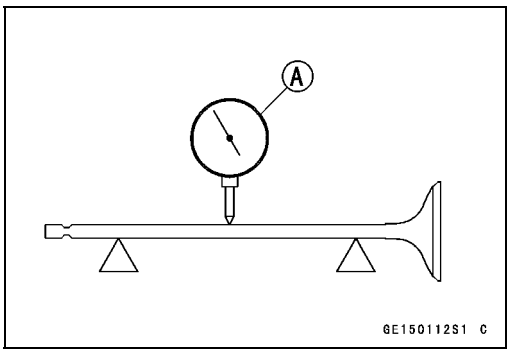

Dial Gauge [A]

Special Tools and Sealant

Compression Gauge, 20 kgf/cm²:
57001-221

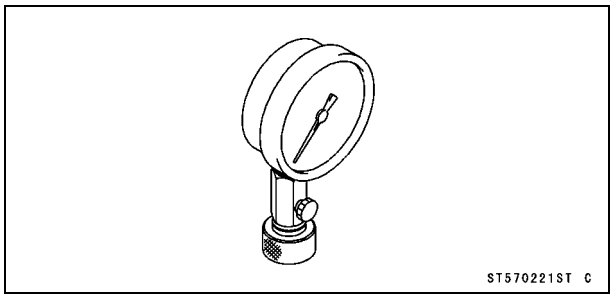

Valve Spring Compressor Assembly:
57001-241

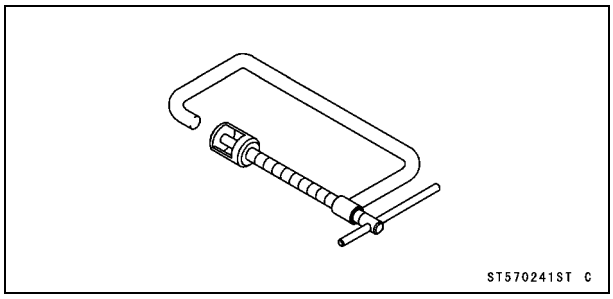

Valve Guide Arbor, ϕ5.5:
57001-1021

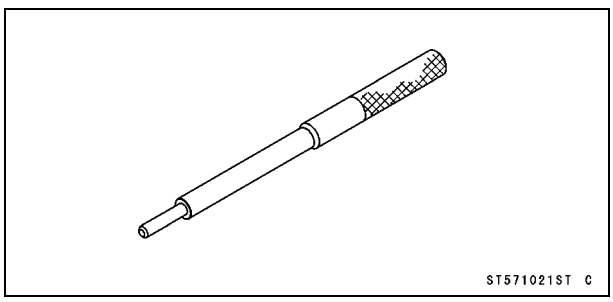

Valve Guide Reamer, ϕ5.5:
57001-1079

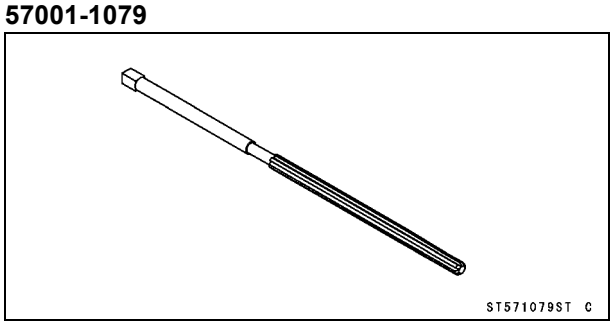

Piston Ring Compressor Grip:
57001-1095

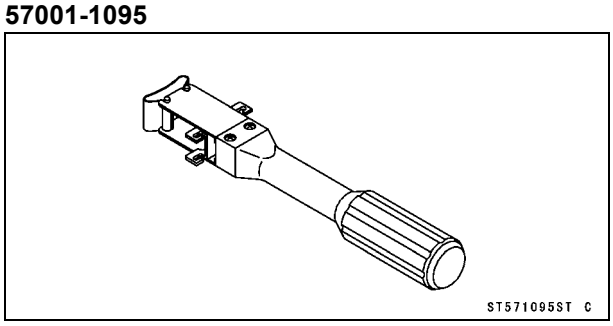

Valve Seat Cutter, 45° - ϕ35:
57001-1116

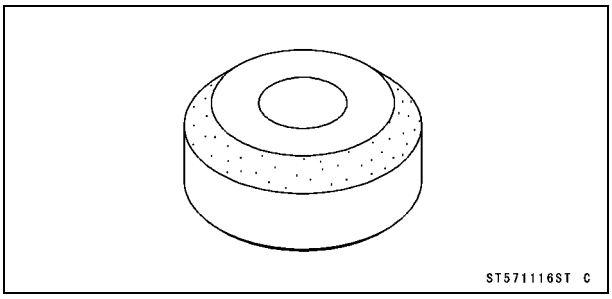

Valve Seat Cutter, 32° - ϕ35:
57001-1121

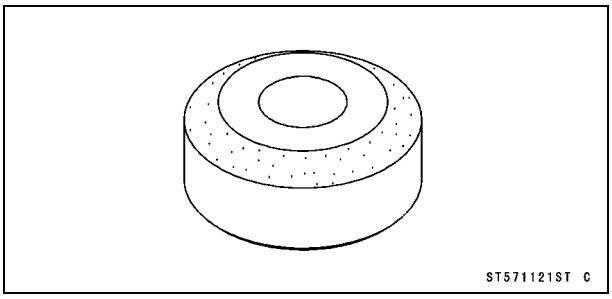

Valve Seat Cutter, 32° - ϕ38.5:
57001-1122

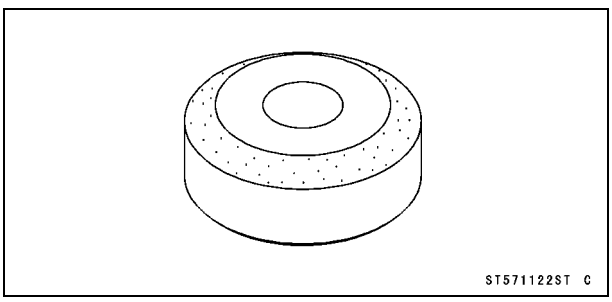

Valve Seat Cutter Holder, ϕ5.5:
57001-1125

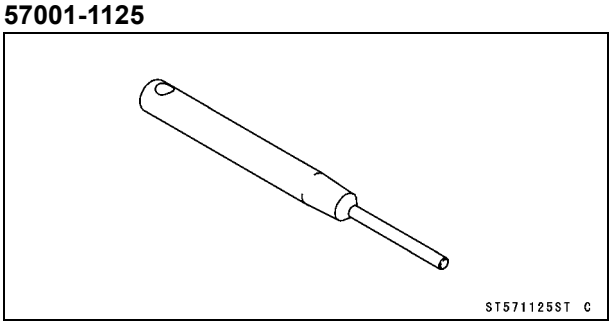

Valve Seat Cutter Holder Bar:
57001-1128

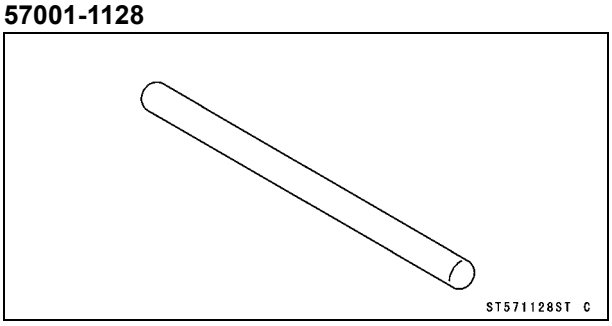

Special Tools and Sealant

Valve Seat Cutter, 55° - ϕ35:
57001-1247

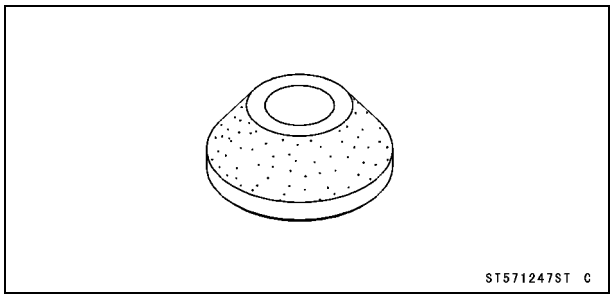

Valve Seat Cutter, 55° - ϕ38.5:
57001-1497

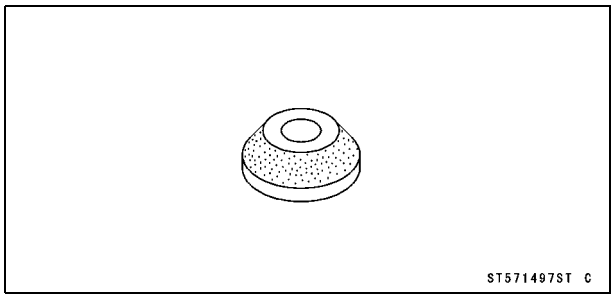

Compression Gauge Adapter, M10 × 1.0:
57001-1317

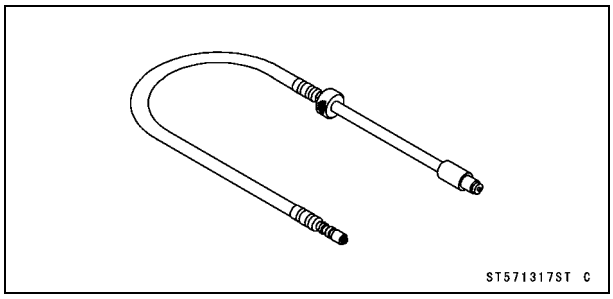

Valve Guide Driver:
57001-1564

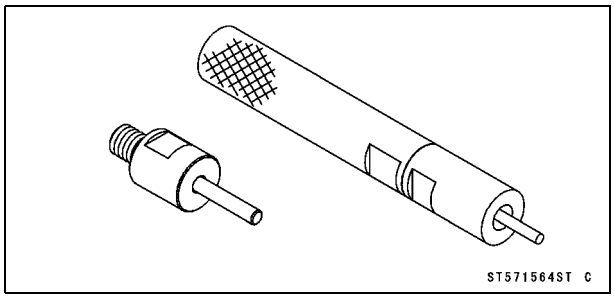

Piston Ring Compressor Belt, ϕ95 ~ ϕ108:
57001-1358

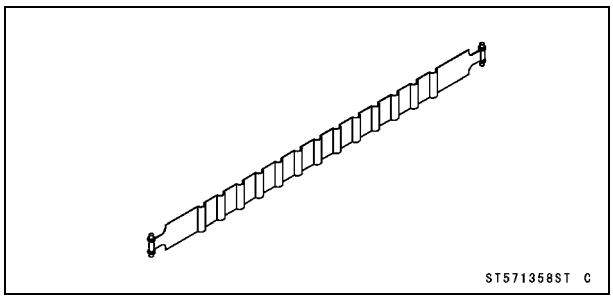

Piston Pin Puller:
57001-1568

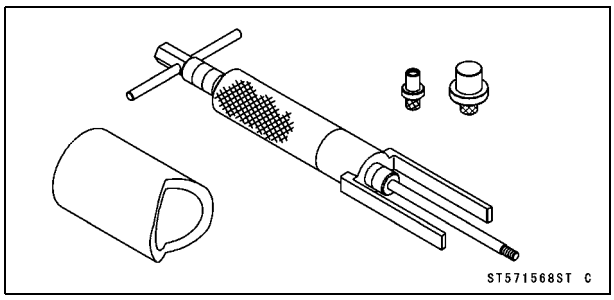

Filler Cap Driver:
57001-1454

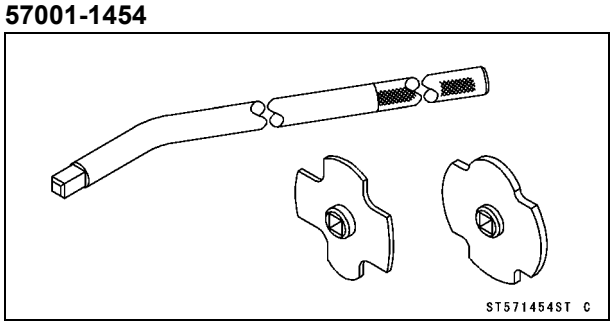

Valve Spring Compressor Adapter, ϕ24:
57001-1586

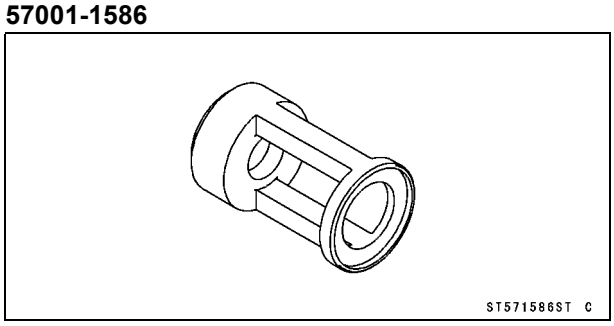

Valve Seat Cutter, 45° - ϕ40:
57001-1496

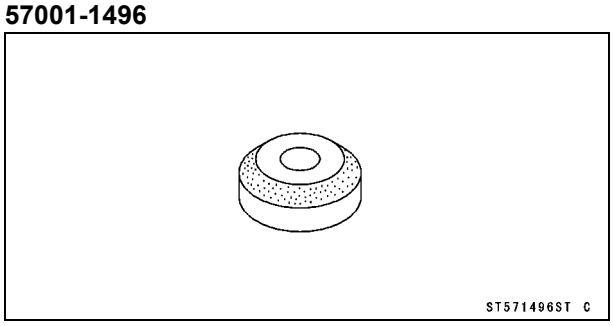

Valve Guide Driver Attachment D:
57001-1659

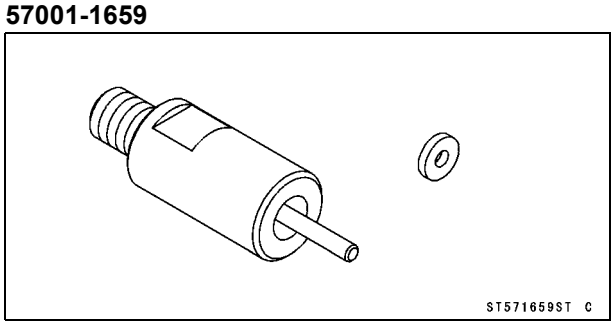

Special Tools and Sealant

Valve Guide Driver Attachment, G:
57001-1728

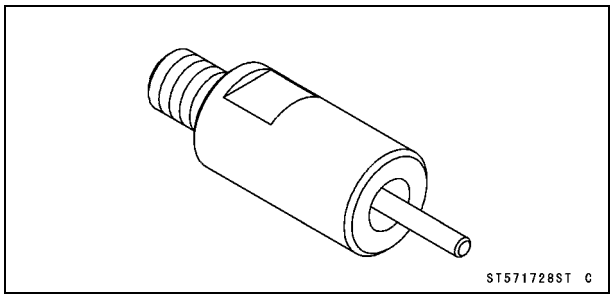

Liquid Gasket, TB1216B:
92104-1064

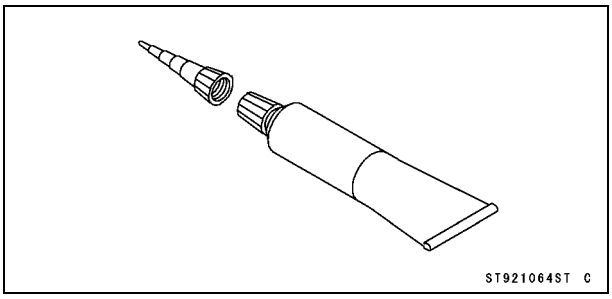

Cylinder Head Cover

Cylinder Head Cover Removal

- Remove:
  Fuel Tank (see Fuel Tank Removal in the Fuel System (DFI) chapter)
  Fuel Hose (see Fuel Hose Replacement in the Periodic Maintenance chapter)
  Spark Plug Cap [A]
  Cylinder Head Cover Bolts [B] and Washers
  Cylinder Head Cover [C]

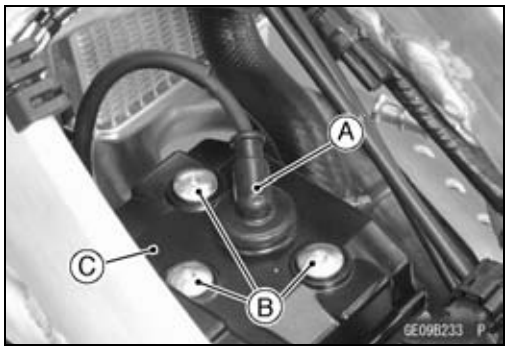

Cylinder Head Cover Installation

- Using a high flash-point solvent, clean off any oil or dirt that may be on the liquid gasket coating area. Dry them with a clean cloth.
- Apply liquid gasket [A] to the cylinder head as shown in the figure.

Sealant - Liquid Gasket, TB1216B: 92104-1064

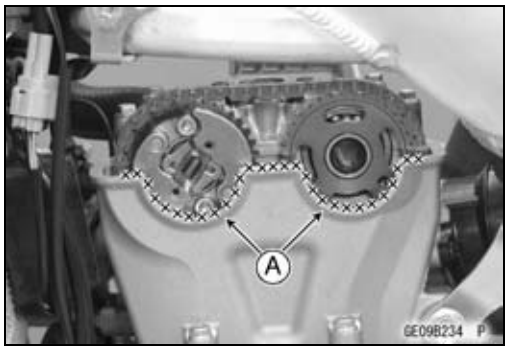

NOTE

○*Make the application finish within 20 minutes when the liquid gasket (TB1216B) to the mating surface of the cylinder head cover is applied.*

- Replace the cylinder head cover gasket and spark plug hole gasket with new ones.
- Install the cylinder head cover gasket [A] and spark plug hole gasket [B].

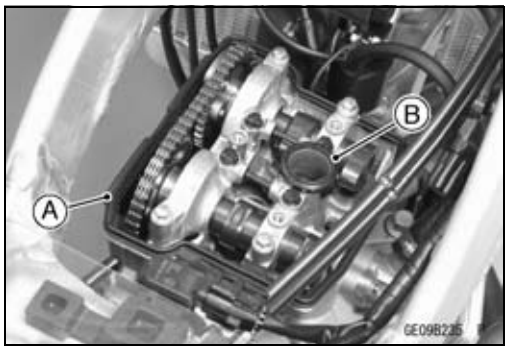

- Make sure that the upper chain guide [A] is bottomed.

NOTICE
Unless the upper chain guide is bottomed, the camshaft chain could push the cylinder head cover upward, leading to an oil leak.

- Install the cylinder head cover.

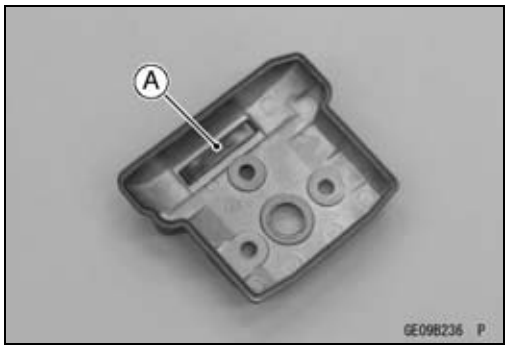

Cylinder Head Cover

- Install the cylinder head cover bolt washers with the metal side [A] upwards.
- Tighten:

  Torque - Cylinder Head Cover Bolts [B]: 9.8 N·m (1.0 kgf·m, 87 in·lb)

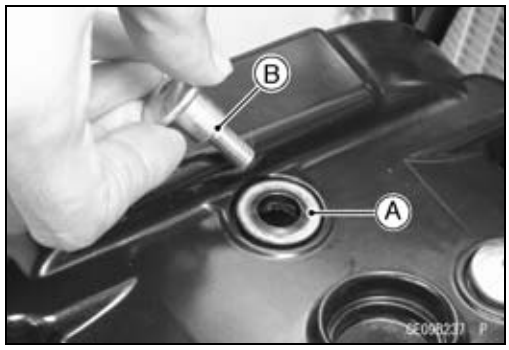

- Install the spark plug cap [A] so that it is aligned with the line [B] on the cylinder head cover.

○Pull up the spark plug cap lightly to make sure of the installation of the spark plug cap.

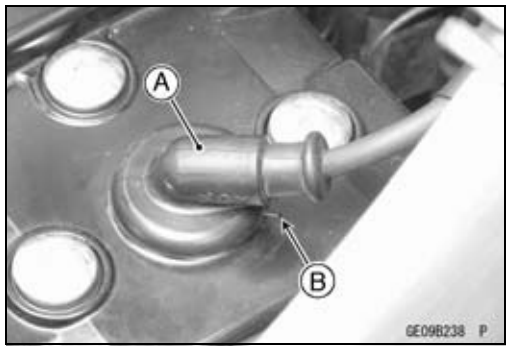

Camshaft Chain Tensioner

Camshaft Chain Tensioner Removal

NOTICE

This is a non-return type camshaft chain tensioner. The push rod does not return to its original position once it moves out to take up camshaft chain slack. Observe all the rules listed below:
When removing the tensioner, do not take out the mounting bolts only halfway. Retightening the mounting bolts from this position could damage the tensioner and the camshaft chain. Once the bolts are loosened, the tensioner must be removed and reset as described in "Camshaft Chain Tensioner Installation".
Do not turn over the crankshaft while the tensioner is removed. This could upset the camshaft chain timing and damage the valves.

- Loosen the cap bolt [A].
- Remove the mounting bolts [B] and take off the camshaft chain tensioner body [C].

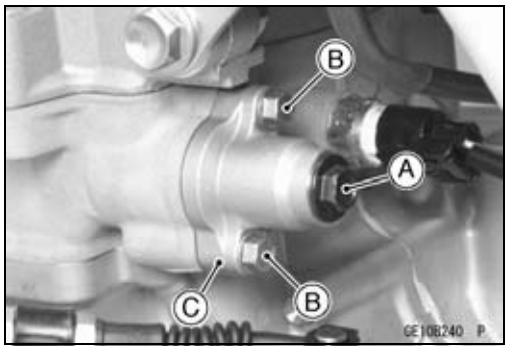

Camshaft Chain Tensioner Installation

- Remove the cap bolt and O-ring.
- While compressing the push rod [A], turn it clockwise with a suitable screwdriver [B] until the rod stops.

NOTICE

Do not turn the rod counterclockwise at installation. This could detach the rod and the tensioner cannot be reinstalled.

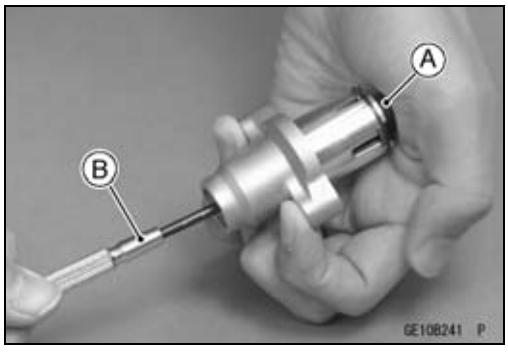

- Hold the rod in position with a suitable push rod holder plate [A].

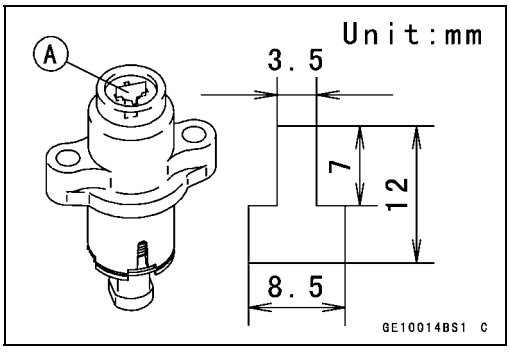

Camshaft Chain Tensioner

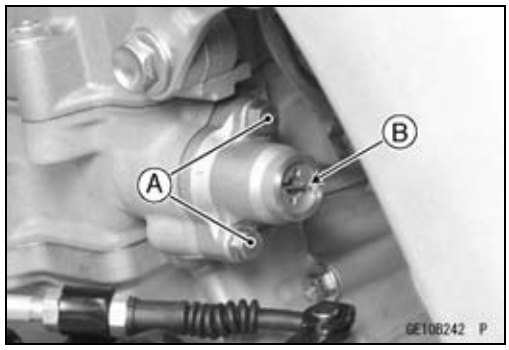

- Replace the chain tensioner gasket with a new one.
- Install the chain tensioner body.
- Tighten:

  Torque - Camshaft Chain Tensioner Mounting Bolts [A]: 9.8 N·m (1.0 kgf·m, 87 in·lb)

- Take out the holder plate [B].
- Replace the O-ring with a new one.
- Apply grease to the O-ring.
- Install the O-ring and tighten the cap bolt.

  Torque - Camshaft Chain Tensioner Cap Bolt: 5.0 N·m (0.51 kgf·m, 44 in·lb)

Camshafts

Camshaft Removal

- Remove:
  Cylinder Head Cover (see Cylinder Head Cover Removal)
  Timing Inspection Cap [A]
  Flywheel Nut Cap [B]

Special Tool - Filler Cap Driver: 57001-1454

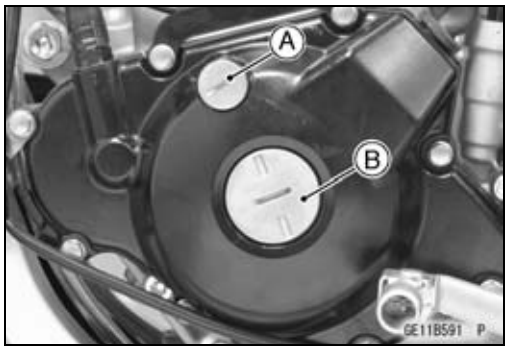

- Bring the piston to the TDC of the compression stroke.

○Place a wrench over the flywheel nut and turn it counterclockwise to align the TDC mark [A] with the center of the groove [B] of the inspection hole.

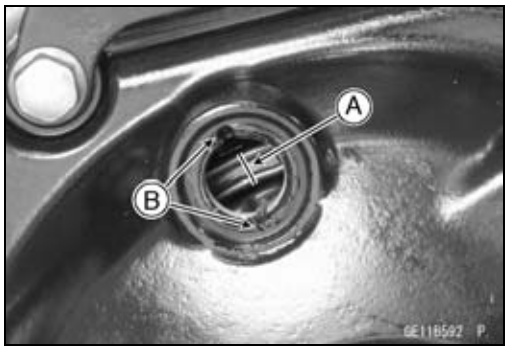

- Remove:
  Camshaft Chain Tensioner (see Camshaft Chain Tensioner Removal)
  Camshaft Cap Bolts [1 ~ 8] (sequence numbers, gradually and evenly)
- While keeping parallel, remove the camshaft caps [A] and oil pipes [B].

○Plug the oil passage and camshaft chain tunnel with a clean cloth for prevent the oil pipe from dropping into the crankcase.

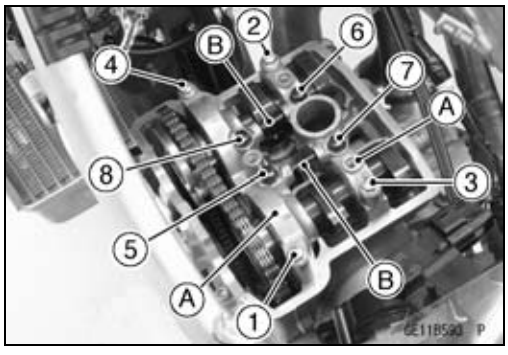

- Remove:
  Positioning Rings [A]
- Disengage the camshafts [B] from camshaft chain [C].

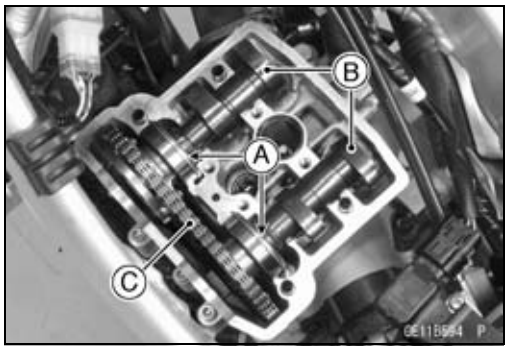

- Staff a clean cloth into the camshaft chain tunnel to keep any parts from dropping into the crankcase.

NOTICE
Always strain the camshaft chain while turning the crankshaft when the camshafts removed. **This avoids kinking the chain on the lower (crankshaft) sprocket. A kinked chain could damage both the chain and the sprocket.**

Camshafts

- While holding the exhaust camshaft with a vise, remove the camshaft sprocket bolts [A].
- Remove:
  Auto-Decompressor [B] (with Sprocket)

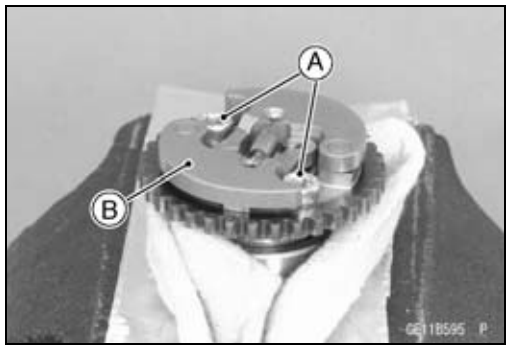

- Remove:
  Circlips [A]

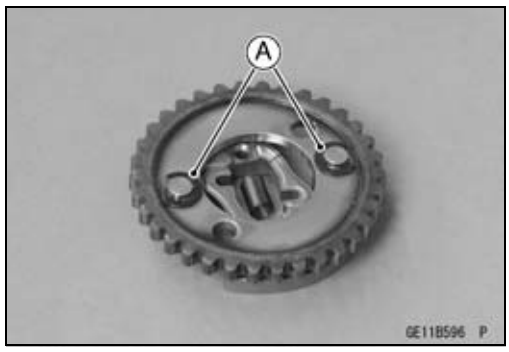

Camshaft Installation

- Assemble the auto-decompressor weights [A] and spring [B] to install it to the sprocket [C].
- Replace the circlips [D] with new ones.
- Install the circlips so that the opening [E] face to the outside.
- Fit the recess [F] of the weight and projections [G] of the camshaft.
- Apply a non-permanent locking agent to the threads of the camshaft sprocket bolts [H].
- Tighten:

  Torque - Camshaft Sprocket Bolts: 12 N·m (1.2 kgf·m, 106 in·lb)

- Apply molybdenum disulfide oil to the ball bearing, all cam and journal surfaces of the camshafts.

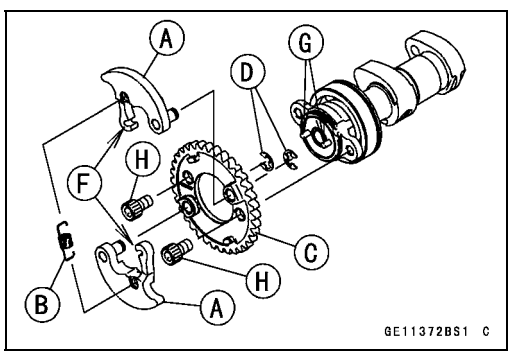

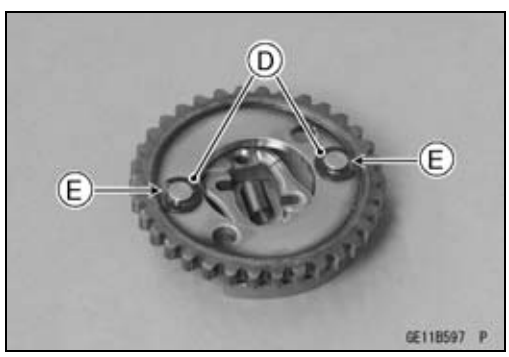

- Bring the piston to the TDC of the compression stroke.

○Place a wrench over the flywheel nut and turn it counterclockwise to align the TDC mark [A] with the center of the groove [B] of the inspection hole.

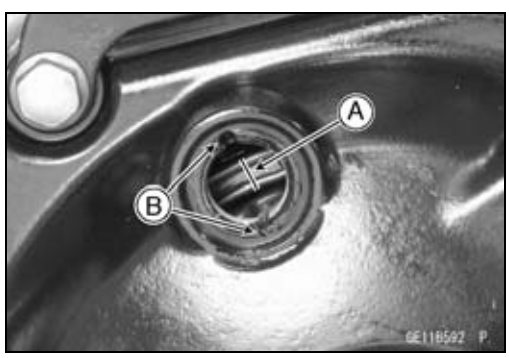

Camshafts

- Engage the camshaft chain with the camshaft sprockets.
  - ○Align the timing mark on the sprocket with the cylinder head upper surface as shown in the figure.
  - ○Starting with the timing mark on the front of the exhaust sprocket, count to the 1st pin. Feed the exhaust camshaft thought the chain and align the 29th pin with the timing mark on the intake camshaft sprocket.

NOTE

○*Strain the exhaust-side of the chain while installing the camshaft.*

○*In this figure, tension is not applied to the chain.*

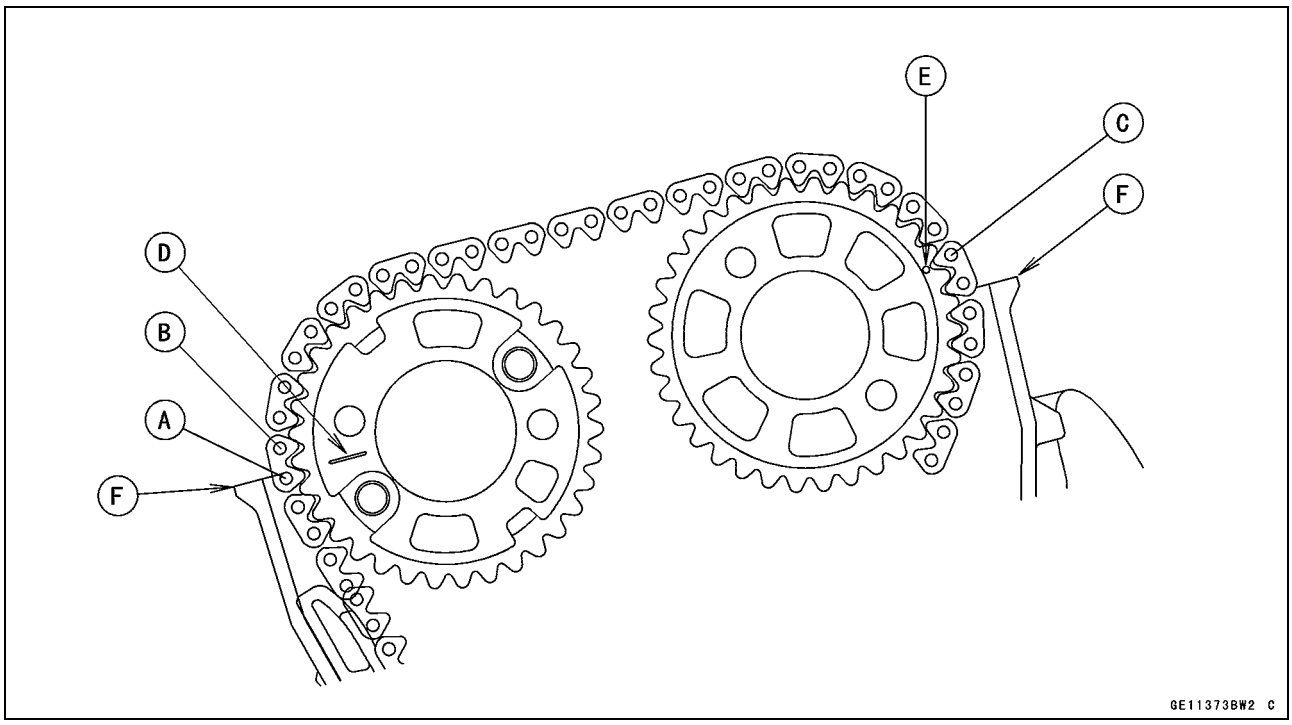

1st Pin [A]	Timing Mark (Exhaust) [D]
2nd Pin [B]	Punch Mark (Intake) [E]
29th Pin [C]	Cylinder Head Upper Surface [F]

NOTE

○*After the installation of the camshaft cap and chain tensioner, confirm the punch mark of the intake camshaft gear aligns with the cylinder head upper surface.*

- Plug the oil passage and camshaft chain tunnel with a clean cloth for prevent the any parts from dropping in the crankcase.
- Be sure to install the positioning rings [A] and dowel pins [B].
- Replace the O-ring [C] with a new one, and apply grease it.

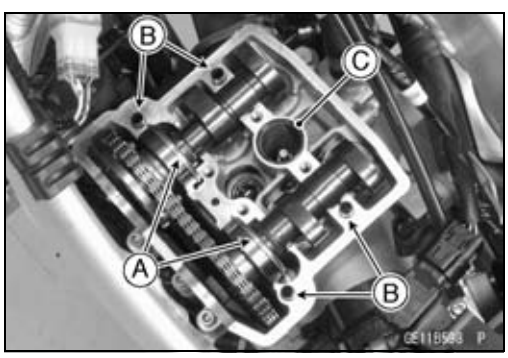

Camshafts

- Apply grease to the rubber portions of the oil pipes [A].
- Assemble:
  Camshaft Caps [B]
  Oil Pipes
- While keeping the camshaft caps in parallel, install them to the cylinder head.

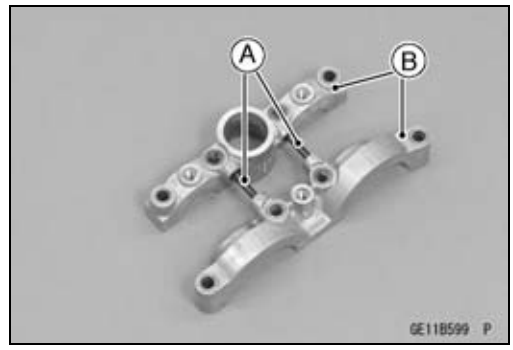

- Apply molybdenum disulfide oil to the threads of the camshaft cap bolts.
- Tighten all camshaft cap bolts evenly and lightly, and then tighten them with specified torque.

○Follow the numbers [1 ~ 8] of tightening sequence on the camshaft cap.

Torque - Camshaft Cap Bolts: 9.8 N·m (1.0 kgf·m, 87 in·lb)

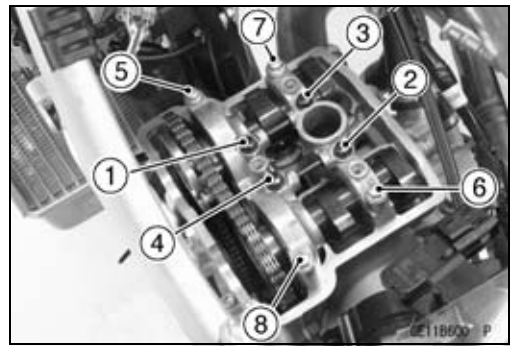

- Install the camshaft chain tensioner (see Camshaft Chain Tensioner Installation).
- Check the camshaft chain timing.

○Confirm the timing mark and punch mark align with the cylinder head upper surface.

★If the timing mark and punch mark do not align with the cylinder head upper surface, reinstall the camshafts.

○Turn the crankshaft slowly.

★If the crankshaft does not turn smoothly, the timing is different. Stop turning immediately.

NOTICE
The improper camshaft chain timing may damage the valves.

- Install:
  Cylinder Head Cover (see Cylinder Head Cover Installation)
- Replace the timing inspection cap and flywheel nut cap O-rings with new ones.
- Apply grease to the O-rings.
- Tighten:

Torque - Timing Inspection Cap: 3.5 N·m (0.36 kgf·m, 31 in·lb)
Flywheel Nut Cap: 3.5 N·m (0.36 kgf·m, 31 in·lb)

Special Tool - Filler Cap Driver: 57001-1454

Camshafts

Camshaft Chain Removal

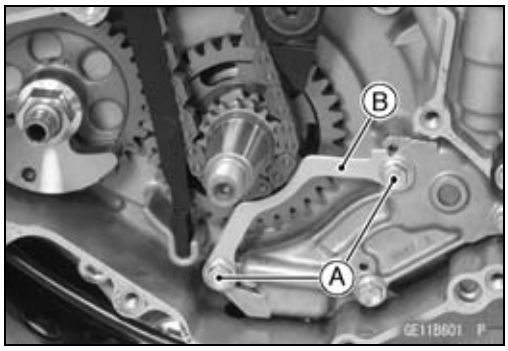

- Remove:
  Camshafts (see Camshaft Removal)
  Flywheel (see Flywheel Removal in the Electrical System chapter)
  Oil Pump (Scavenge) Cover Bolts [A]
  Lower Camshaft Chain Guide [B]
- Disengage the camshaft chain from the crankshaft.

Camshaft Chain Installation

- Engage the camshaft chain to the crankshaft.
- Install the lower camshaft chain guide.
- Tighten:

Torque - Oil Pump (Scavenge) Cover Bolts: 9.8 N·m (1.0 kgf·m, 87 in·lb)

- Install:
  Flywheel (see Flywheel Installation in the Electrical System chapter)
  Camshafts (see Camshaft Installation)

Camshaft and Camshaft Cap Wear Inspection

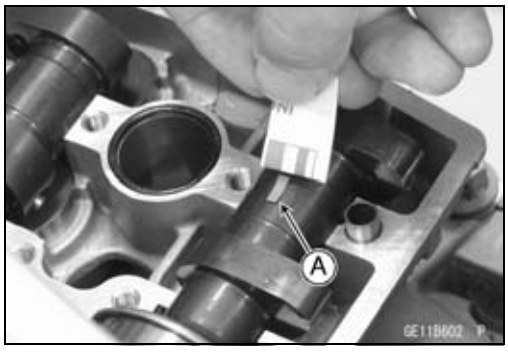

- Measure each clearance between the camshaft journal and camshaft cap using plastigage (press gauge) [A].

○Tighten the camshaft cap bolts after applying molybdenum disulfide oil to the thread of them.

Torque - Camshaft Cap Bolts: 9.8 N·m (1.0 kgf·m, 87 in·lb)

NOTE

○*Do not turn the camshaft when the plastigage is between the journal and camshaft cap.*

Camshaft Journal/Camshaft Cap Clearance
Standard: 0.020 ~ 0.062 mm (0.0008 ~ 0.0024 in.)
Service Limit: 0.15 mm (0.0059 in.)

★If any clearance exceeds the service limit, measure the diameter of each camshaft journal with a micrometer.

Camshaft Journal Diameter
Standard: 22.959 ~ 22.980 mm (0.9039 ~ 0.9047 in.)
Service Limit: 22.93 mm (0.9028 in.)

★If the camshaft journal diameter is less than the service limit, replace the camshaft with a new one, and measure the clearance again.

★If the clearance still remains out of the service limit, replace the cylinder head unit.

Camshafts

Camshaft Runout Inspection

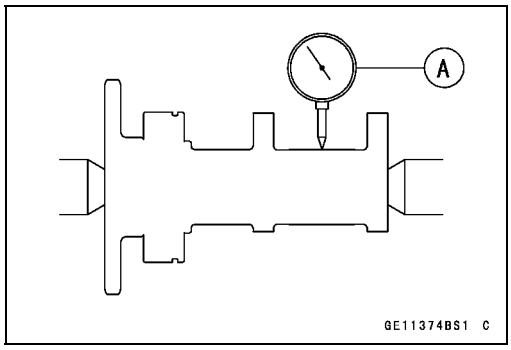

- Remove the camshafts (see Camshaft Removal).
- Set the camshaft in a camshaft alignment jig or on V blocks.
- Measure the runout with a dial gauge [A] at the specified place as shown in the figure.

★If the runout exceeds the service limit, replace the camshaft.

Camshaft Runout

Standard:	**TIR 0.02 mm (0.0008 in.) or less**
Service Limit:	**TIR 0.1 mm (0.004 in.)**

Cam Wear Inspection

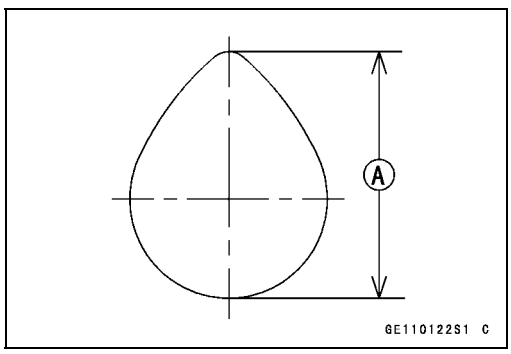

- Remove the camshafts (see Camshaft Removal).
- Measure the height [A] of each cam with a micrometer.

★If the cams are worn down past the service limit, replace the camshaft.

Cam Height

Standard:	
Exhaust	**36.943 ~ 37.057 mm (1.4544 ~ 1.4589 in.)**
Intake:	
KX450FC	**38.143 ~ 38.257 mm (1.5017 ~ 1.5062 in.)**
KX450FD ~	**37.743 ~ 37.857 mm (1.4859 ~ 1.4904 in.)**
Service Limit:	
Exhaust	**36.84 mm (1.450 in.)**
Intake:	
KX450FC	**38.04 mm (1.498 in.)**
KX450FD ~	**37.64 mm (1.482 in.)**

Cylinder Head

Cylinder Compression Measurement

- Warm up the engine thoroughly.
- Stop the engine.
- Remove:
  Fuel Tank (see Fuel Tank Removal in the Fuel System (DFI) chapter)
  Spark Plug (see Spark Plug Cleaning and Inspection in the Periodic Maintenance chapter)

- Attach the compression gauge [A] and compression gauge adapter [B] firmly into the spark plug hole.
- Measure the compression pressure.

○With the throttle fully open, turn the engine over sharply with the kickstarter several times until the compression gauge stops rising; the compression is the highest reading obtainable.

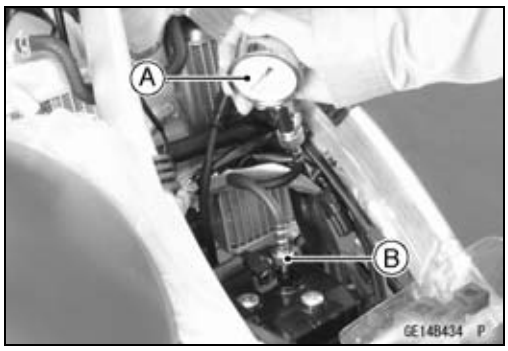

Special Tools - Compression Gauge, 20 kgf/cm²: 57001-221
Compression Gauge Adapter, M10 × 1.0: 57001-1317

Cylinder Compression
Usable Range: 420 ~ 698 kPa (4.3 ~ 7.1 kgf/cm², 61 ~ 101 psi) at 5 times

- Install the removed parts (see appropriate chapters).

★If the compression pressure is not within the usable range, check the following table.

Problem	Diagnosis	Remedy (Action)
The cylinder compression is higher than the usable range.	Carbon accumulation on piston and in cylinder head (combustion chamber) is suspected due to damaged valve stem or piston oil rings.	Remove the carbon deposits and replace damaged parts if necessary.
	Incorrect cylinder head gasket thickness	Replace the gasket with a standard one.
	Damaged auto-decompressor spring or decompressor do not move smoothly.	Replace the spring or auto-decompressor.
The cylinder compression is lower than the usable range.	Exhaust gas leakage around cylinder head.	Replace the damaged gasket and inspect cylinder head warp.
	Incorrect seating surface of valve	Repair seating surface if possible.
	Valve clearance is too narrow.	Adjust the valve clearance.
	Piston/cylinder clearance is too wide.	Replace the piston and/or cylinder.
	Piston seizure	Inspect the cylinder and piston; repair or replace them if necessary.
	Bad condition of piston ring and/or piston ring grooves	Replace the piston and/or the piston rings.
	Auto-decompressor do not move smoothly.	Replace the auto-decompressor.

Cylinder Head

Cylinder Head Removal

- Remove:
  Fuel Tank (see Fuel Tank Removal in the Fuel System (DFI) chapter)
  Cylinder Head Cover (see Cylinder Head Cover Removal)
  Camshafts (see Camshaft Removal)
  Exhaust Pipe (see Exhaust Pipe Removal)
  Ignition Coil (see Ignition Coil Removal in the Electrical System chapter)

- Remove:
  Upper Engine Bracket [A] (Both Sides)
  Cylinder Head Bolts (M6) [B]
- Loosen:
  Cylinder Bolt [C]
  Throttle Body Assy Clamp Screw [D]

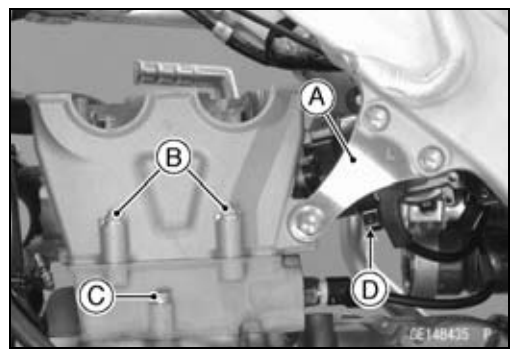

- Remove:
  Water Hose Clamp Screw [A] (Loosen)
  Water Hose [B]

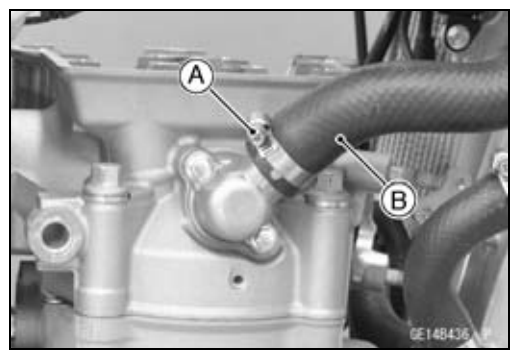

- Remove the cylinder head bolts (M10) [A].
- Pull the throttle body assy off the throttle body assy holder.

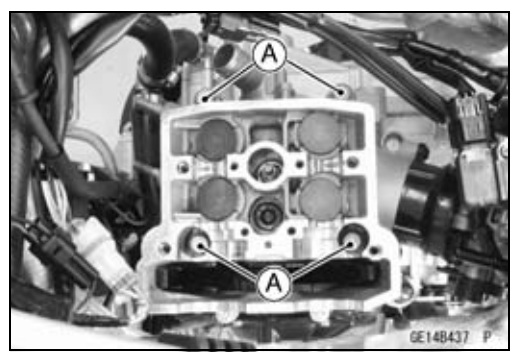

- Remove the cylinder head [A].

NOTE

○*When do not remove the cylinder head easily, tap lightly up with a plastic mallet [B] to separate the cylinder head from the cylinder.*

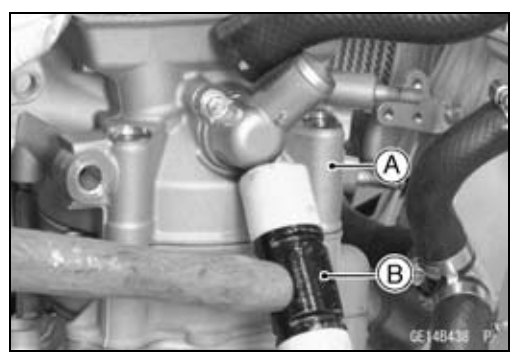

Cylinder Head

○Take care not to damage the chain guides [A].

NOTICE
Do not touch the radiator core. This could damage the radiator fins, resulting in loss of cooling efficiency.

● Remove the cylinder head gasket [B].

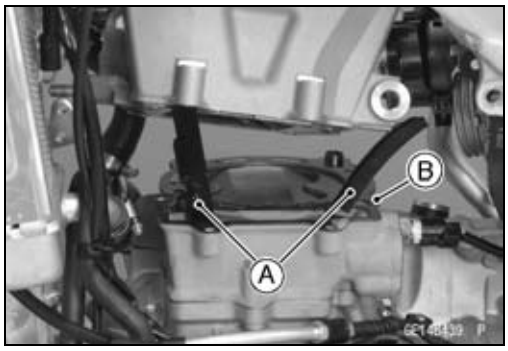

Cylinder Head Installation

● Fit the projections [A] of the front camshaft chain guide in the grooves [B] of the cylinder.

○Insert the guide end [C] into the recess [D] of the crankcase securely.

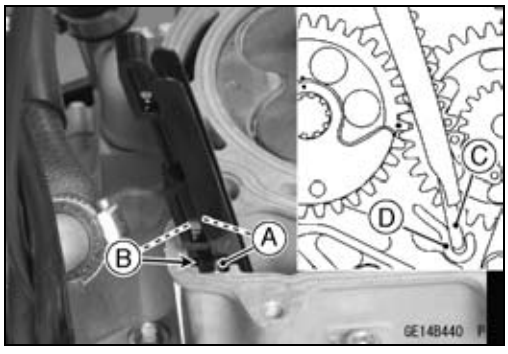

● Install:
Dowel Pins [A]
New Cylinder Head Gasket [B]

● Install the cylinder head.

NOTE

○*The camshaft caps are machined with the cylinder head; therefore, if a new cylinder head is installed, use the caps that are supplied with the new head.*

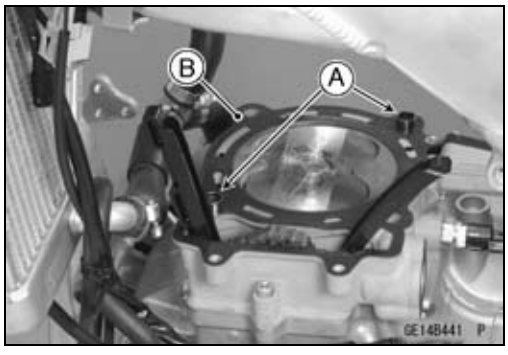

● Replace the cylinder head bolt (M10) washers with new ones.

○These washers could leak oil if reused.

● Apply molybdenum disulfide oil to the following areas.
Cylinder Head Bolt (M10) Washers (Both Sides) [A]
Cylinder Head Bolt (M10) Threads [B]

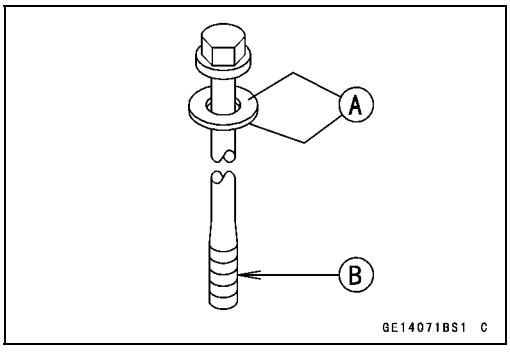

● Tighten the cylinder head bolts (M10) in the numbered sequence [1 ~ 4].

Torque - Cylinder Head Bolts (M10): 59 N·m (6.0 kgf·m, 44 ft·lb)

L = 140 mm (5.51 in.) [1, 3]
L = 127 mm (5.00 in.) [2, 4]

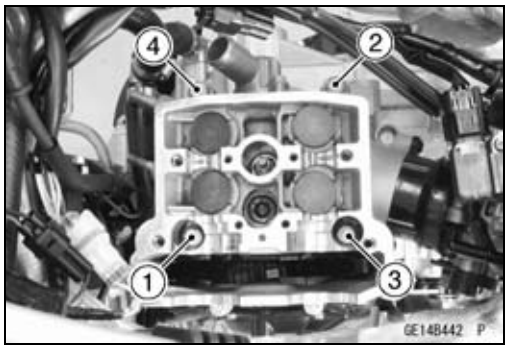

Cylinder Head

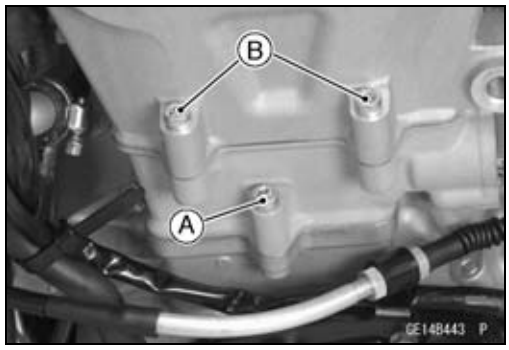

- Tighten:

  Torque - Cylinder Bolt [A]: 12 N·m (1.2 kgf·m, 106 in·lb)
  Cylinder Head Bolts (M6) [B]: 12 N·m (1.2 kgf·m, 106 in·lb)

- Install the removed parts (see appropriate chapters).

Cylinder Head Cleaning

- Refer to the Cylinder Head Warp Inspection in the Periodic Maintenance chapter.

Cylinder Head Warp Inspection

- Refer to the Cylinder Head Warp Inspection in the Periodic Maintenance chapter.

Valves

Valve Clearance Inspection

- Refer to the Valve Clearance Inspection in the Periodic Maintenance chapter.

Valve Clearance Adjustment

- Refer to the Valve Clearance Adjustment in the Periodic Maintenance chapter.

Valve Removal

- Remove the cylinder head (see Cylinder Head Removal).
- Remove the valve lifter and shim.

NOTE

○*Mark and record the locations of the valve lifters and shims so that they can be reinstalled in their original positions.*

- Using the valve spring compressor assembly [A] and adapter [B], compress the valve spring and then remove the split keepers.

  Special Tools - Valve Spring Compressor Assembly: 57001-241
  Valve Spring Compressor Adapter, ϕ24: 57001-1586

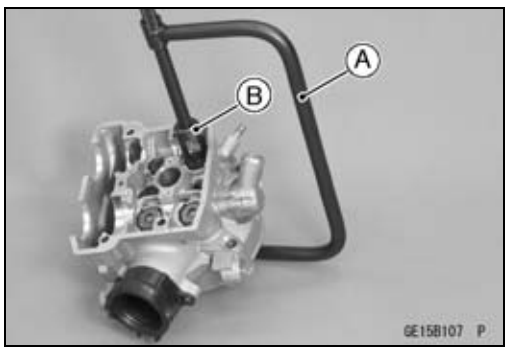

- Remove:
  Spring Retainer
  Inner Valve Spring and Outer Valve Spring
  Valve
  Oil Seal
  Spring Seat

Valves

Valve Installation

NOTICE
Do not lap the valve to the valve seat, using the grinding compound. It will come off oxide film treated surface of the valve.

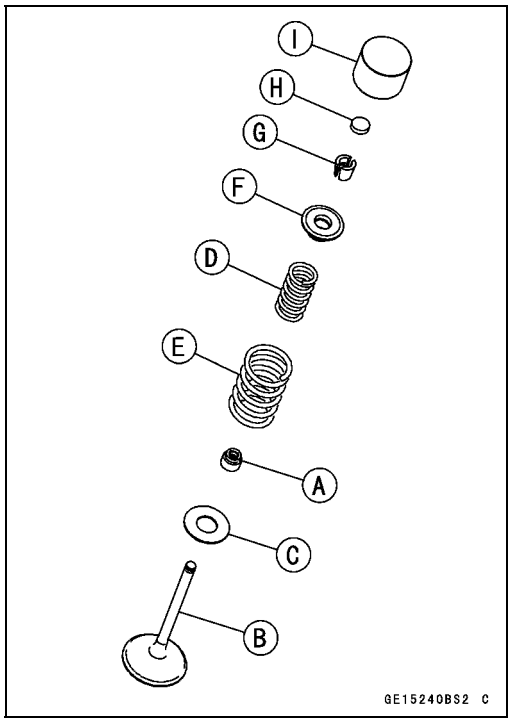

- Visually inspect the valve surface.

★If the surface is damaged, replace the valve.

- Replace the oil seal [A] with a new one.
- Apply a thin coat of molybdenum disulfide grease to the valve stem [B] and install the valve.
- Check to make sure that the valve moves up and down smoothly.
- Check to make sure that the valve and valve seat are making proper contact.
- Install:
  Oil Seal
  Spring Seat [C]
- Install the inner valve spring [D] and outer valve spring [E] so that the closed coil end faces the spring seat.

○Turn the painted side of the valve spring to the spring retainer [F].
  Exhaust - Red Paint
  Intake - Pink Paint

- Install the spring retainer.
- Compress the valve spring to install the split keepers [G] in order to secure the spring retainer in place.

Special Tools - Valve Spring Compressor Assembly: 57001-241
Valve Spring Compressor Adapter, ϕ24: 57001-1586

- Install the shim to original position.

○The shim [H] must be installed with its thickness indication facing up towards the retainer.

- Apply engine oil to the valve lifter [I] surface, and install the lifter.

Valve Guide Removal

- Remove:
  Valve (see Valve Removal)
  Oil Seal
  Spring Seat
- Heat the area around the valve guide up to 120 ~ 150°C (248 ~ 302°F).

NOTICE
Do not heat the cylinder head with a torch. This will warp the cylinder head. Soak the cylinder head in oil and heat the oil.

- Hammer lightly on the valve guide arbor [A] to remove the guide.

  Special Tool - Valve Guide Arbor, ϕ5.5: 57001-1021

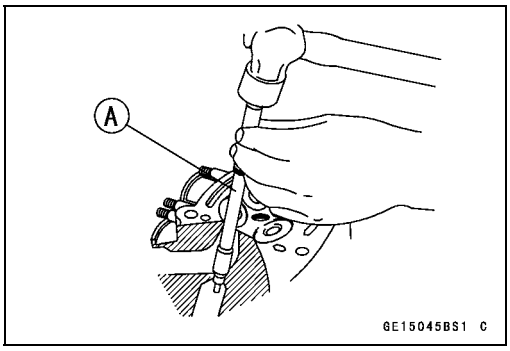

Valve Guide Installation

- Apply a thin coat of engine oil to the outer surface of the valve guide.
- Heat the area around the valve guide up to 120 ~ 150°C (248 ~ 302°F).

NOTICE
Do not heat the cylinder head with a torch. This will warp the cylinder head. Soak the cylinder head in oil and heat the oil.

- Assemble the valve guide driver [A] and valve guide driver attachment G [B].
- Using the valve guide driver, press and insert the valve guide in until the valve guide driver surface [D] touches the head surface.
- When install the exhaust valve guide, using the attached spacer (t = 2.0) [C] of the attachment D.
  Exhaust 11.35 ~ 11.55 mm (0.437 ~ 0.445 in.) [E]
  Intake 13.35 ~ 13.55 mm (0.516 ~ 0.524 in.) [F]

  Special Tools - Valve Guide Driver: 57001-1564
  Valve Guide Driver Attachment D: 57001-1659
  Valve Guide Driver Attachment, G: 57001-1728

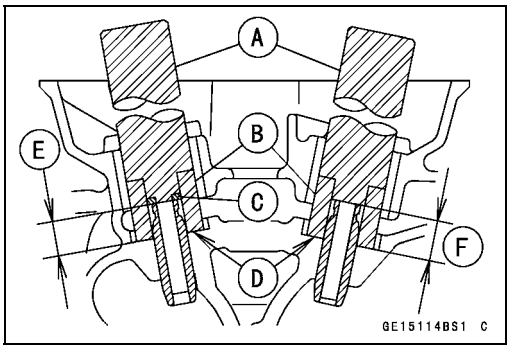

- Ream the valve guide with valve guide reamer [A], even if the old guide is reused.

  Special Tool - Valve Guide Reamer, ϕ5.5: 57001-1079

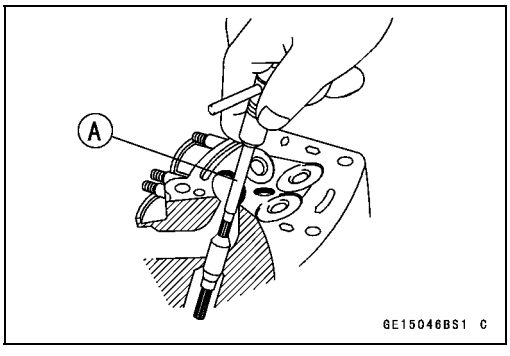

Valves

Valve/Valve Guide Clearance Measurement (Wobble Method)

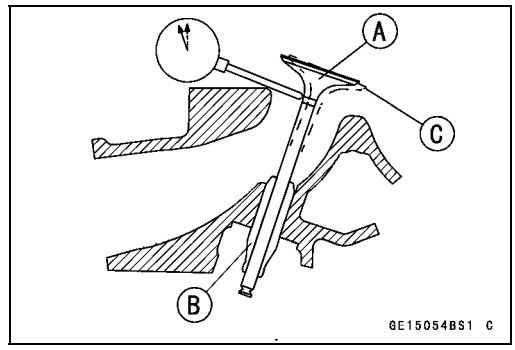

If a small bore gauge is not available, inspect the valve guide wear by measuring the valve/valve guide clearance with the wobble method as indicated below.

- Insert a new valve [A] into the guide [B] and set a dial gauge against the stem perpendicular to it as close as possible to the cylinder head mating surface.
- Move the stem back and forth [C] to measure the valve/valve guide clearance.

- Repeat the measurement in a direction at a 90° angle to the first measurement.

★If the reading exceeds the service limit, replace the guide.

NOTE

○*The reading is greater than the actual valve/valve guide clearance because the measurement is taken outside of the guide.*

Valve/Valve Guide Clearance (Wobble Method)

Standard:

Exhaust	**0.08 ~ 0.15 mm (0.0032 ~ 0.0059 in.)**
Intake	**0.05 ~ 0.12 mm (0.0020 ~ 0.0047 in.)**

Service Limit:

Exhaust	**0.32 mm (0.013 in.)**
Intake	**0.30 mm (0.012 in.)**

Valve Seat Inspection

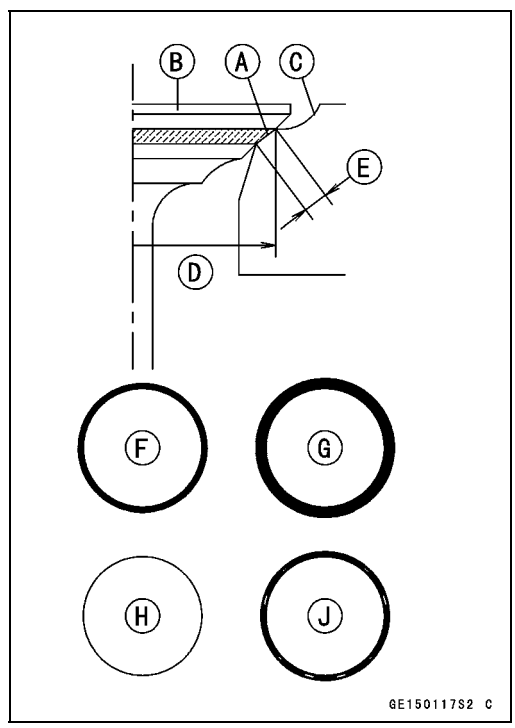

- Remove the valve (see Valve Removal).
- Check the valve seating surface [A] between the valve [B] and valve seat [C].
- Measure the outside diameter [D] of the seating pattern on the valve seat.

★If the outside diameter is too large or too small, repair the seat (see Valve Seat Repair).

Valve Seating Surface Outside Diameter

Standard:

Exhaust	**30.4 ~ 30.6 mm (1.197 ~ 1.205 in.)**
Intake	**35.4 ~ 35.6 mm (1.394 ~ 1.402 in.)**

○Measure the seat width [E] of the portion where there is no build-up carbon (white portion) of the valve seat with a vernier caliper.

Good [F]

★If the width is too wide [G] , too narrow [H] or uneven [J], repair the seat (see Valve Seat Repair).

Valve Seating Surface Width

Standard:

Exhaust	**0.8 ~ 1.2 mm (0.03 ~ 0.05 in.)**
Intake	**0.5 ~ 1.0 mm (0.02 ~ 0.04 in.)**

Valve Seat Repair

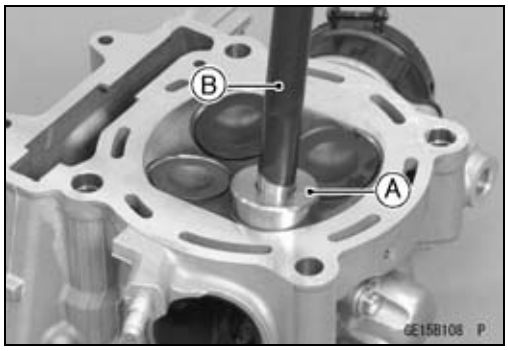

- For the instructions on how to use the valve seat cutter [A], follow the operation manual provided by the tool manufacturer.

Special Tools - Valve Seat Cutter Holder, ϕ5.5 [B]: 57001-1125
Valve Seat Cutter Holder Bar: 57001-1128

Exhaust: Valve Seat Cutter, 45° - ϕ35: 57001-1116
Valve Seat Cutter, 32° - ϕ35: 57001-1121
Valve Seat Cutter, 55° - ϕ35: 57001-1247
Intake: Valve Seat Cutter, 45° - ϕ40: 57001-1496
Valve Seat Cutter, 32° - ϕ38.5: 57001-1122
Valve Seat Cutter, 55° - ϕ38.5: 57001-1497

★If the tool manufacturer's instructions are not available, operate in accordance with the following procedure.

Seat Cutter Operation Care

1. This valve seat cutter is developed to grind the valve for repair. Therefore the cutter must not be used for other purposes than seat repair.
2. Do not drop or shock the valve seat cutter, or the diamond particles may fall off.
3. Do not fail to apply engine oil to the valve seat cutter before grinding the seat surface. Also wash off ground particles sticking to the cutter with washing oil.

NOTICE
Do not use a wire brush to remove the metal particles from the cutter. It will take off the diamond particles.

4. Setting the valve seat cutter holder in position, operate the cutter in one hand. Do not apply too much force to the diamond portion.

NOTE

○*Prior to grinding, apply engine oil to the cutter and during the operation, wash off any ground particles sticking to the cutter with washing oil.*

5. After use, wash it with washing oil and apply thin layer of engine oil before storing.

Marks Stamped on the Cutter

The marks stamped on the back of the cutter [A] represent the following.

60° ..... Cutter Angle [B]
37.5ϕ ..... Cutter Outer Diameter [C]

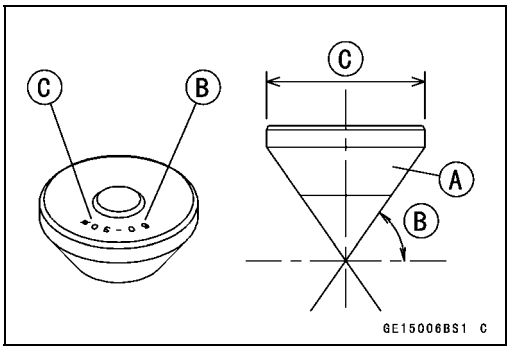

Valves

Repair Operating Procedures

- Clean the seat area carefully.
- Coat the seat with machinist's dye.
- Fit a 45° cutter into the holder and slide it into the valve guide.
- Press down lightly on the handle and turn it right or left. Grind the seating surface only until it is smooth.

NOTICE
Do not grind the seat too much. Overgrinding will reduce valve clearance by sinking the valve into the head. If the valve sinks too far into the head, it will be impossible to adjust the clearance, and the cylinder head must be replaced.

Widened Width [A] of engagement by machining with 45° cutter
Ground Volume [B] by 32° cutter
32° [C]
Correct Width [D]
Ground Volume [E] by 55° cutter
55° [F]

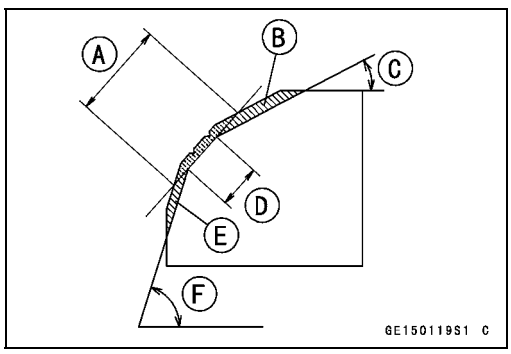

- Measure the outside diameter of the seating surface with a vernier caliper.

★If the outside diameter of the seating surface is too small, repeat the 45° [A] grind until the diameter is within the specified range.
Original Seating Surface [B]

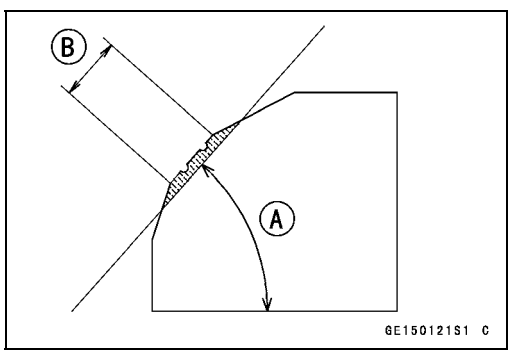

NOTE

○*Remove all pittings of flaws from 45° ground surface.*
○*After grinding with 45° cutter, apply thin coat of machinist's dye to seating surface. This makes seating surface distinct and 32° and 55° grinding operation easier.*
○*When the valve guide is replaced, be sure to grind with 45° cutter for centering and good contact.*

★If the outside diameter [A] of the seating surface is too large, make the 32° [B] grind described below.

★If the outside diameter of the seating surface is within the specified range, measure the seat width as described below.

- Grind the seat at a 32° angle until the seat outside diameter is within the specified range.

○To make the 32° grind, fit a 32° cutter into the holder, and slide it into the valve guide.
○Turn the holder one turn at a time while pressing down very lightly. Check the seat after each turn.

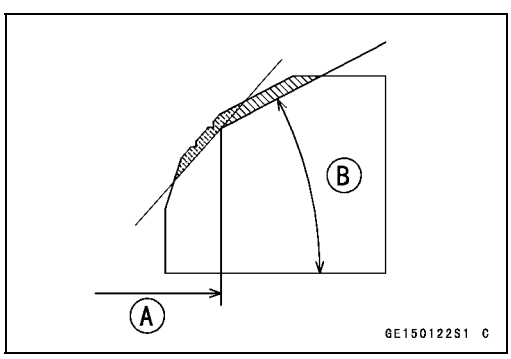

Valves

NOTICE
The 32° cutter removes material very quickly. Check the seat outside diameter frequently to prevent overgrinding.

○After making the 32° grind, return to the seat outside diameter measurement step above.
● To measure the seat width, use a vernier caliper to measure the width of the 45° angle portion of the seat at several places around the seat.
★If the seat width is too narrow, repeat the 45° grind until the seat is slightly too wide, and then return to the seat outside diameter measurement step above.

★If the seat width is too wide, make the 55° [A] grind described below.
★If the seat width is within the specified range, lap the valve to the seat as described below.
● Grind the seat at a 55° angle until the seat width is within the specified range [B].
○To make the 55° grind, fit a 55° cutter into the holder, and slide it into the valve guide.
○Turn the holder, while pressing down lightly.
○After making the 55° grind, return to the seat width measurement step above.

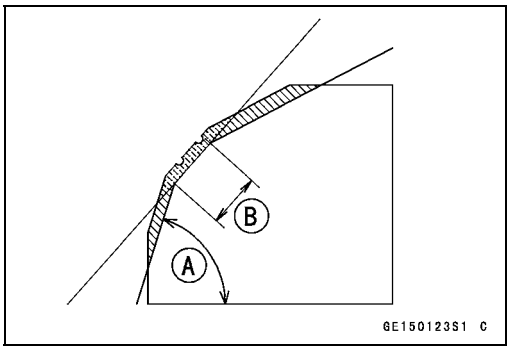

NOTICE
Do not lap the valve to the valve seat, using the grinding compound. It will come off oxide film treated surface of the valve.

● When the engine is assembled, be sure to adjust the valve clearance (see Valve Clearance Adjustment in the Periodic Maintenance chapter).

Valves

Valve Seat Repair

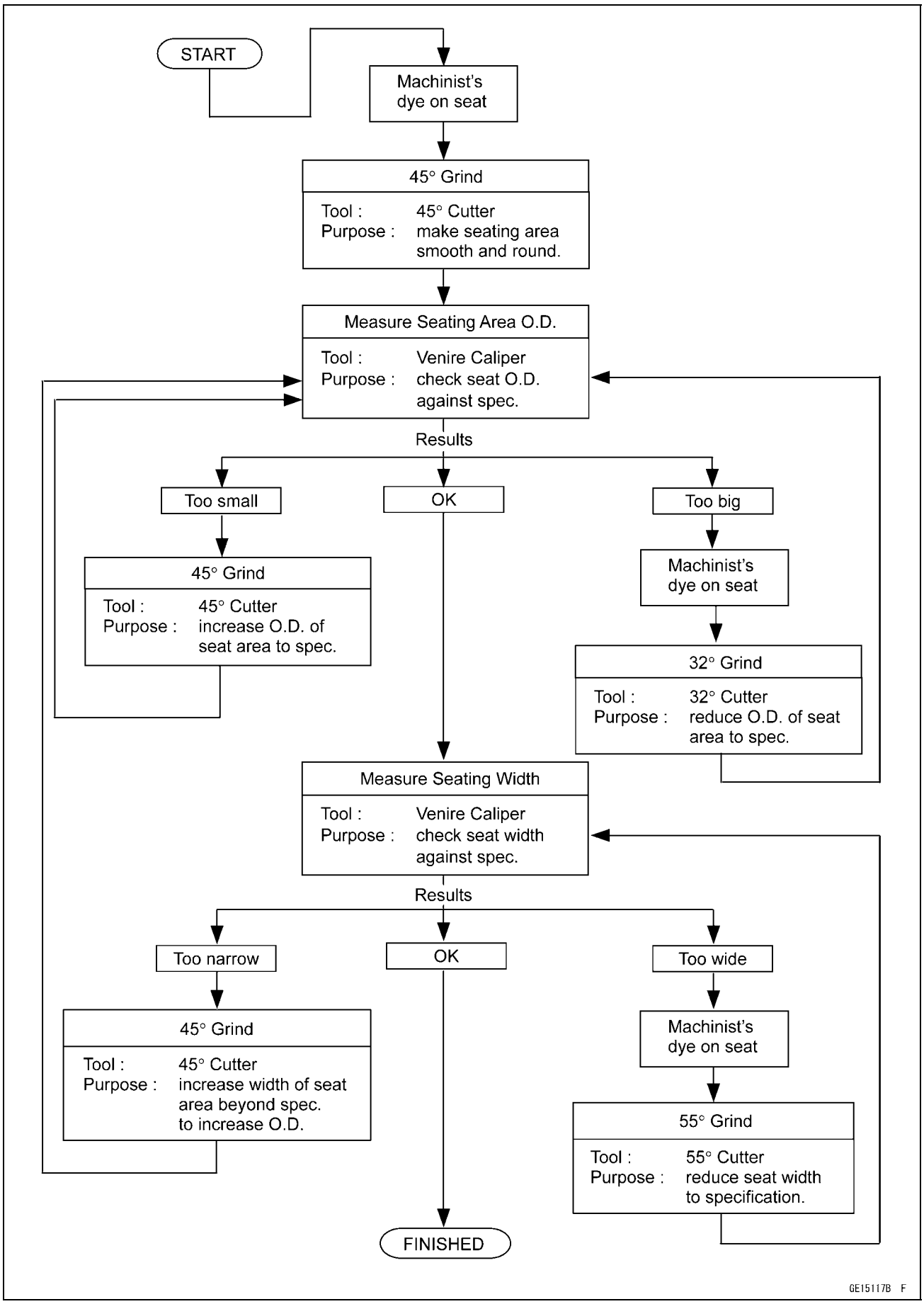

Cylinder and Piston

Cylinder Removal

- Remove:
  Cylinder Head (see Cylinder Head Removal)
  Front Camshaft Chain Guide [A]
  Cylinder Bolt [B]
  Water Temperature Sensor Connector [C] (Disconnect)
- Tap lightly up with a plastic mallet to separate the cylinder from the crankcase.
- Remove the cylinder base gasket.

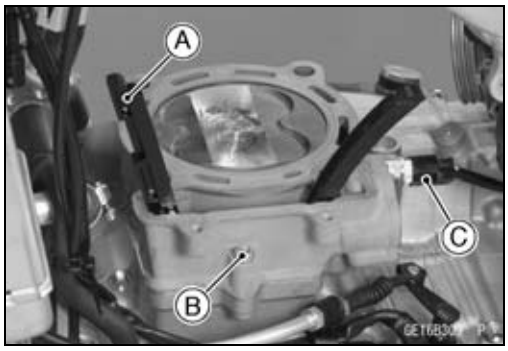

Piston Removal

- Remove the cylinder (see Cylinder Removal).
- Remove the piston pin snap ring [A].

NOTE

○*Lay a clean cloth under the piston, to prevent dropping dirt or parts into the crankcase.*

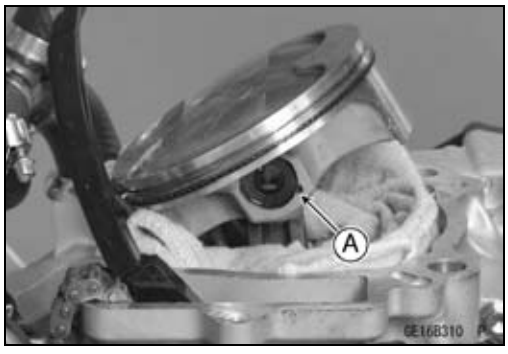

- Remove the piston pin, using a piston pin puller [A].
  Special Tool - Piston Pin Puller: 57001-1568
- Remove the piston.

- Carefully spread the piston ring opening with your thumbs and then push up on the opposite side of the ring [A] to remove it.
- Remove the oil ring in the same procedure.

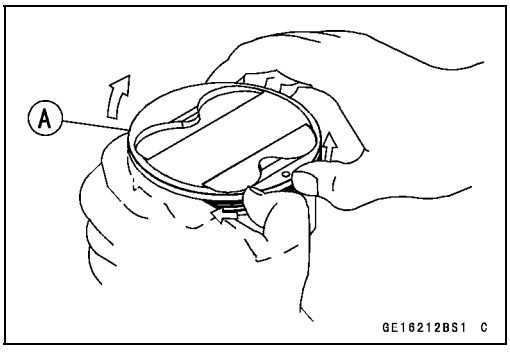

Cylinder and Piston Installation

NOTE

○*If a new piston or cylinder is used, check piston/cylinder clearance (see Piston/Cylinder Clearance Inspection in the Periodic Maintenance chapter), and use new piston rings.*

Cylinder and Piston

NOTE

○*The oil ring rails have no "top" or "bottom".*

- Install the oil ring expander [A] in the bottom piston ring groove so the ends [B] butt together.
- Install the oil ring steel rails, one above the expander and one below it.

○Spread the rail with your thumbs, but only enough to fit the rail over the piston.

○Release the rail into the bottom piston ring groove.

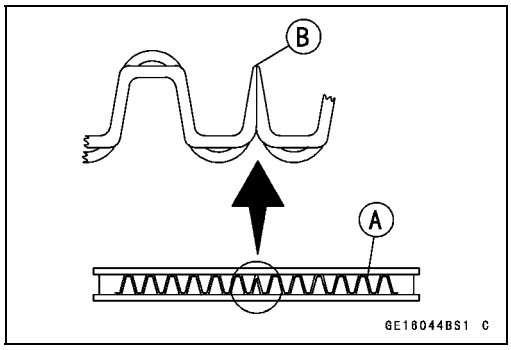

- Install the top ring [A] so that the "R" mark [B] faces up.

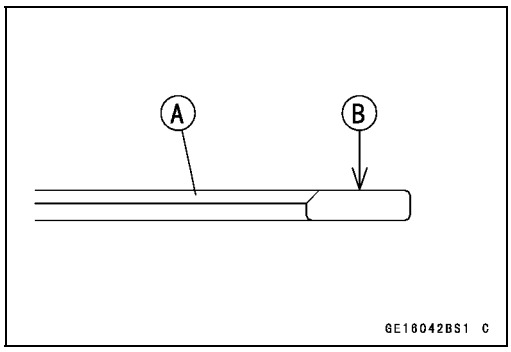

- Apply engine oil to the inside wall of the connecting rod small end.
- Install the piston as shown in the figure.
  Circle Mark [A]
  Front [B]
- Install the piston pin.

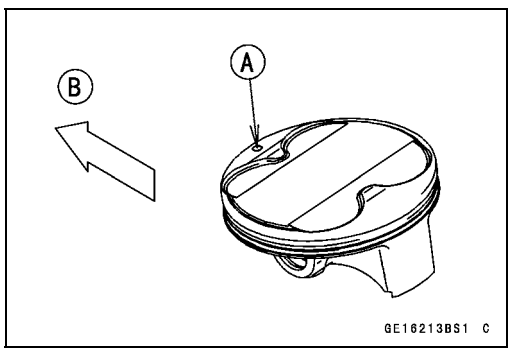

- Fit a new piston pin snap ring into the side of the piston so that the ring opening [A] does not coincide with the slit [B] of the piston pin hole.

○When installing the piston pin snap ring, compress it only enough to install it and no more.

NOTICE
Do not reuse snap rings, as removal weakens and deforms them. They could fall out and score the cylinder wall.

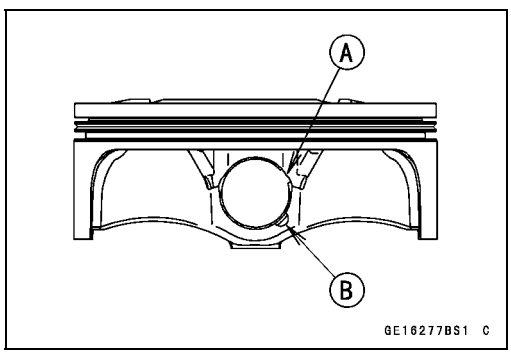

- Install:
  Dowel Pins [A]
  New Cylinder Base Gasket [B]

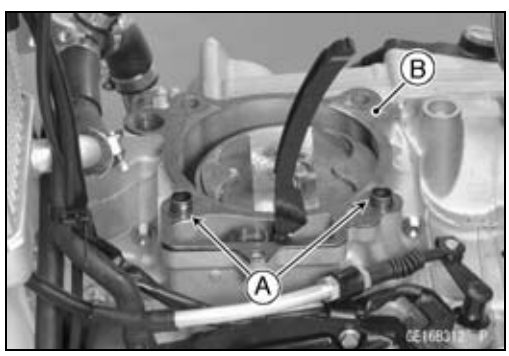

Cylinder and Piston

- The piston ring openings must be positioned as shown in the figure. The openings of the oil ring steel rails must be about 20° [A] of angle from the opening of the oil ring expander.
  Circle Mark [B]
  Top Ring [C]
  Upper Oil Ring Steel Rail [D]
  Oil Ring Expander [E]
  Lower Oil Ring Steel Rail [F]

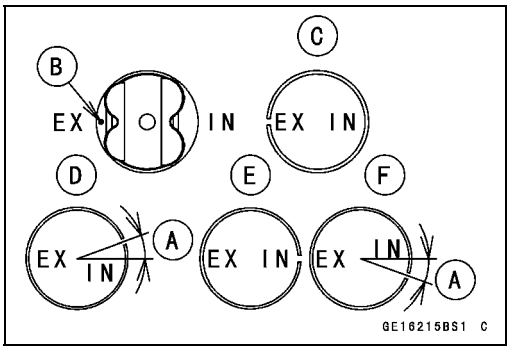

- Apply engine oil to the cylinder bore and the piston side wall.
- Install the cylinder while compressing the piston rings with your fingers or the special tool [A].

○Upturn the chamfering side of the belt.

Special Tools - Piston Ring Compressor Grip: 57001-1095
Piston Ring Compressor Belt, ϕ95 ~ ϕ108: 57001-1358

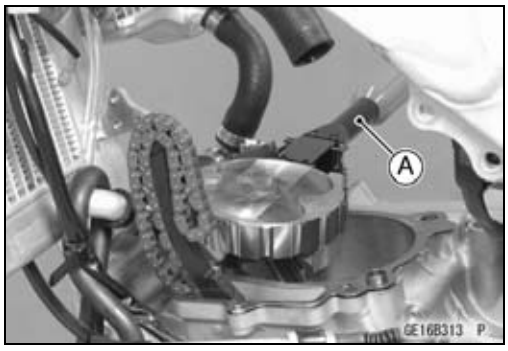

- Install:
  Cylinder Bolt
  Front Camshaft Chain Guide
- Install the removed parts (see appropriate chapters).

Cylinder Wear Inspection

- Refer to the Cylinder Wear Inspection in the Periodic Maintenance chapter.

Piston Wear Inspection

- Using a micrometer, measure the outside diameter [A] of the piston **7.5 mm (0.30 in.)** [B] up from the bottom of the piston at a right angle to the direction of the piston pin.

Piston Diameter
Standard: 95.970 ~ 95.980 mm (3.7783 ~ 3.7787 in.)
Service Limit: 95.82 mm (3.772 in.)

★If the piston outside diameter is smaller than the service limit, replace the piston.

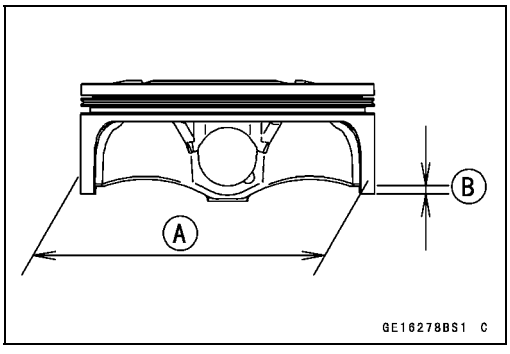

Piston/Cylinder Clearance Inspection

- Refer to the Piston/Cylinder Clearance in the Periodic Maintenance chapter.

Cylinder and Piston

Piston Ring/Ring Groove Clearance Inspection

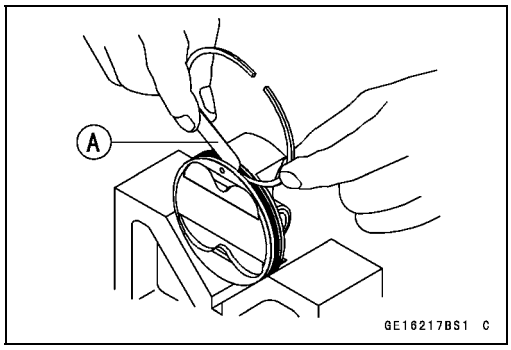

- Check for uneven groove wear by inspecting the ring seating.

★The rings should fit perfectly parallel to groove surfaces. If not, replace the piston and all the piston rings.

- With the piston rings in their grooves, make several measurements with a thickness gauge [A] to determine piston ring/groove clearance.

Piston Ring/Ring Groove Clearance

Standard:

Top	**0.04 ~ 0.08 mm (0.002 ~ 0.003 in.)**

Service Limit:

Top	**0.18 mm (0.0071 in.)**

★If the piston ring groove clearance is greater than the service limit, measure the ring thickness and groove width as follows to decide whether to replace the rings, the piston or both.

Piston Ring Groove Width Inspection

- Measure the groove width at several points around the piston with a vernier caliper.

Piston Ring Groove Width

Standard:

Top	**0.83 ~ 0.85 mm (0.0327 ~ 0.0335 in.)**

Service Limit:

Top	**0.93 mm (0.037 in.)**

★If any of the groove widths exceeds the service limit, replace the piston.

Piston Ring Thickness Inspection

- Measure the thickness at several points around the ring with a micrometer.

Piston Ring Thickness

Standard:

Top	**0.77 ~ 0.79 mm (0.030 ~ 0.031 in.)**

Service Limit:

Top	**0.70 mm (0.028 in.)**

★If any of the measurements is less than the service limit, replace all the rings.

NOTE

○*When using new rings in a used piston, check for uneven groove wear. The rings should fit perfectly parallel to the groove sides. If not, replace the piston.*

Cylinder and Piston

Piston Ring End Gap Measurement

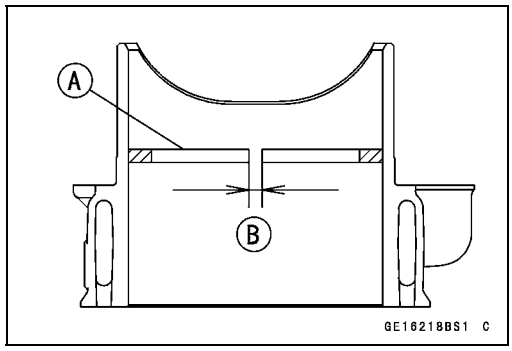

- Place the piston ring [A] inside the cylinder, using the piston to locate the ring squarely in place. Set it close to the bottom of the cylinder, where cylinder wear is low.
- Measure the gap [B] between the ends of the ring with a thickness gauge.

Piston Ring End Gap

Standard:

Top	**0.23 ~ 0.33 mm (0.0091 ~ 0.0130 in.)**
Oil	**0.15 ~ 0.50 mm (0.0059 ~ 0.0197 in.)**

Service Limit:

Top	**0.6 mm (0.02 in.)**
Oil	**0.8 mm (0.03 in.)**

★If the ring end gap exceeds the service limit, replace all the rings.

Piston, Piston Pin, Connecting Rod Wear Inspection

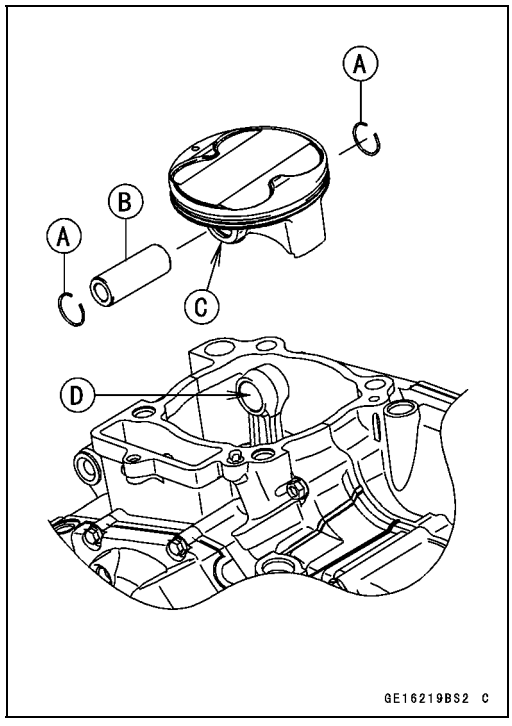

- Visually inspect the snap rings [A] still fitted in place.

★If the ring shows weakness or deformation, replace the ring. Also if the pin hole groove shows excessive wear, replace the piston.

- Measure the diameter of the piston pin [B] with a micrometer.

Piston Pin Diameter

Standard:	**18.991 ~ 19.000 mm (0.74768 ~ 0.74803 in.)**
Service Limit:	**18.96 mm (0.7465 in.)**

★If the piston pin diameter is less than the service limit at any point, replace the piston pin.

- Using a cylinder gauge, measure the diameter of both piston pin holes [C] in the piston and the inside diameter of the connecting rod small end [D].

Piston Pin Hole Diameter

Standard:	**19.004 ~ 19.010 mm (0.74819 ~ 0.74842 in.)**
Service Limit:	**19.08 mm (0.7512 in.)**

Connecting Rod Small End Inside Diameter

Standard:	**19.019 ~ 19.030 mm (0.74878 ~ 0.74921 in.)**
Service Limit:	**19.07 mm (0.7508 in.)**

★If either piston pin hole diameter exceeds the service limit, replace the piston.

★If the connecting rod small end inside diameter exceeds the service limit, replace the connecting rod.

Throttle Body Holder

Throttle Body Assy Holder Removal

- Remove:
  Throttle Body Assy (see Throttle Body Assy Removal in the Fuel System (DFI) chapter)
  Throttle Body Assy Clamp [A]
  Throttle Body Assy Holder Screws [B]
  Clamp [C] (KX450FD ~)
  Throttle Body Assy Holder [D]

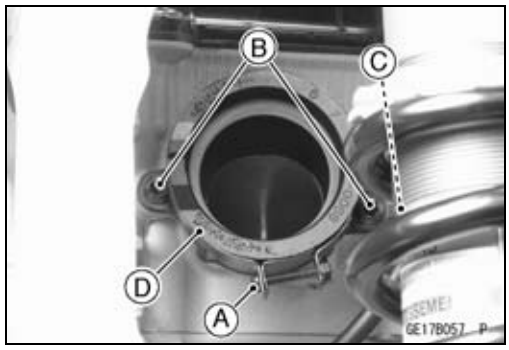

Throttle Body Assy Holder Installation

- Replace the O-ring [A] with a new one.
- Apply grease to the O-ring.
- Install the O-ring to the throttle body assy holder [B].

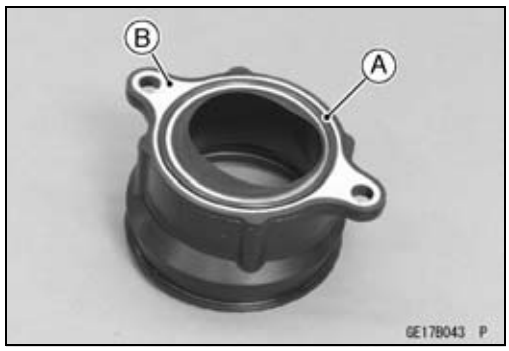

- Install the throttle body assy holder so that the groove [A] faces left side.
- Apply a non-parmanent locking agent to the threads of the throttle body assy holder screws [B].
- Install the clamp [C] (KX450FD ~).
- Tighten:

  Torque - Throttle Body Assy Holder Screws : 9.8 N·m (1.0 kgf·m, 87 in·lb)

- Install:
  Throttle Body Assy Clamp [D]
  Throttle Body Assy (see Throttle Body Assy Installation in the Fuel System (DFI) chapter)

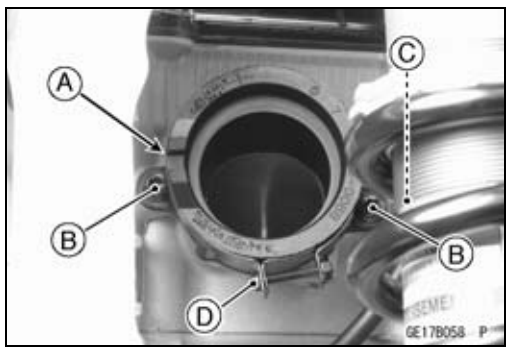

Muffler

⚠ WARNING

The muffler can become extremely hot during normal operation and cause severe burns. Do not remove the muffler while it is hot.

Muffler Body Removal

- Remove the right side cover (see Side Cover Removal in the Frame chapter).
- Loosen the muffler clamp bolt [A].
- Remove the mounting bolts [B], and pull out the muffler body backward.

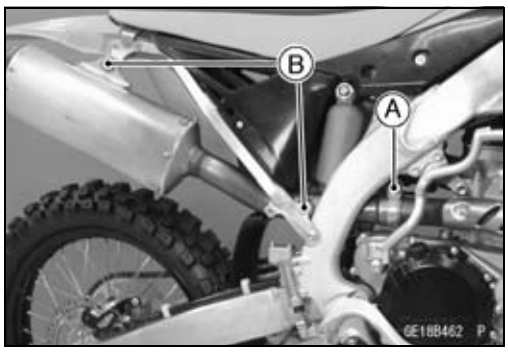

Exhaust Pipe Removal

- Loosen the muffler clamp bolt [A].
- Remove:
  Exhaust Pipe Holder Nuts [B]
  Exhaust Pipe [C]

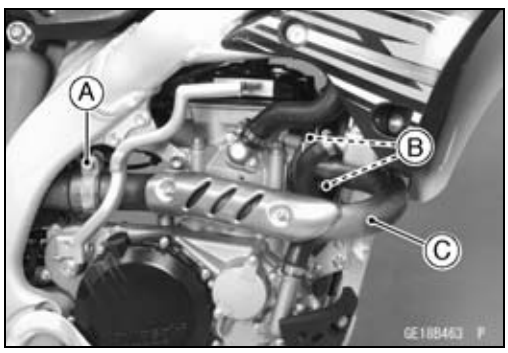

Muffler Installation

- Replace the exhaust pipe gasket [A] with a new one.
- Apply grease to the exhaust pipe gasket, and install it to engine.
- Replace the muffler pipe gasket [B] with a new one. Make sure that the gasket is placed securely inside the muffler body.

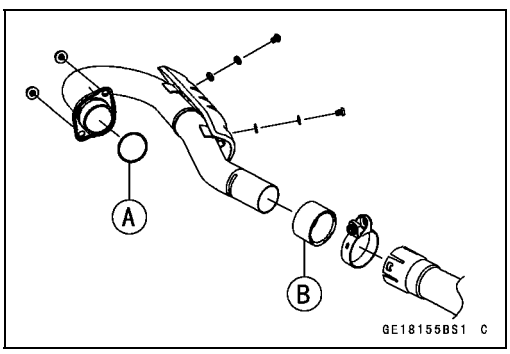

- Install the exhaust pipe and muffler body temporary.
- Temporary tighten the exhaust pipe holder nuts [A] first, and then the muffler mounting bolt (rear) [B].
- Tighten:

  Torque - Muffler Mounting Bolts: 20 N·m (2.0 kgf·m, 15 ft·lb)

○Tighten the front bolt [C] first, and then the rear bolt.

- Tighten:

  Torque - Exhaust Pipe Holder Nuts: 20 N·m (2.0 kgf·m, 15 ft·lb)
  Muffler Clamp Bolt [D]: 16.5 N·m (1.68 kgf·m, 12.2 ft·lb)

○Face the muffler clamp bolt upward.
○Tighten the holder nuts first, and then the clamp bolt.

- Thoroughly warm up the engine, wait until the engine cools down, and then retighten all the bolts and nuts.

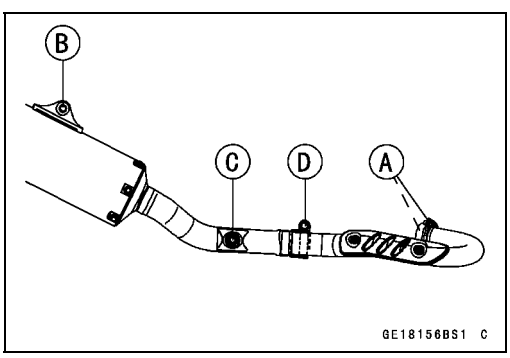

Silencer Wool Replacement

- Refer to the Silencer Wool Replacement in the Periodic Maintenance chapter.

Clutch

Table of Contents

Exploded View 6-2
Specifications 6-4
Special Tools 6-5
Clutch Lever and Cable 6-6
- Clutch Lever (Clutch Cable) Free Play Inspection 6-6
- Clutch Lever (Clutch Cable) Free Play Adjustment 6-6
- Clutch Lever Installation 6-6
- Clutch Cable Removal 6-6
- Clutch Cable Installation 6-7
- Clutch Cable Inspection and Lubrication 6-8

Clutch Cover and Right Engine Cover 6-9
- Clutch Cover Removal 6-9
- Clutch Cover Installation 6-9
- Right Engine Cover Removal 6-9
- Right Engine Cover Installation 6-10
- Right Engine Cover Assembly 6-11

Clutch 6-12
- Clutch Removal 6-12
- Clutch Installation 6-13
- Clutch Plate Assembly Free Play Inspection/Adjustment 6-16
- Release Shaft Removal 6-16
- Release Shaft Installation 6-16
- Clutch Plates Wear, Damage Inspection 6-17
- Clutch Plates Warp Inspection 6-17
- Clutch Spring Free Length Inspection 6-17
- Clutch Housing Finger Damage Inspection 6-17
- Friction Plate/Clutch Housing Clearance Inspection 6-17
- Clutch Hub Spline Damage Inspection 6-17

Exploded View

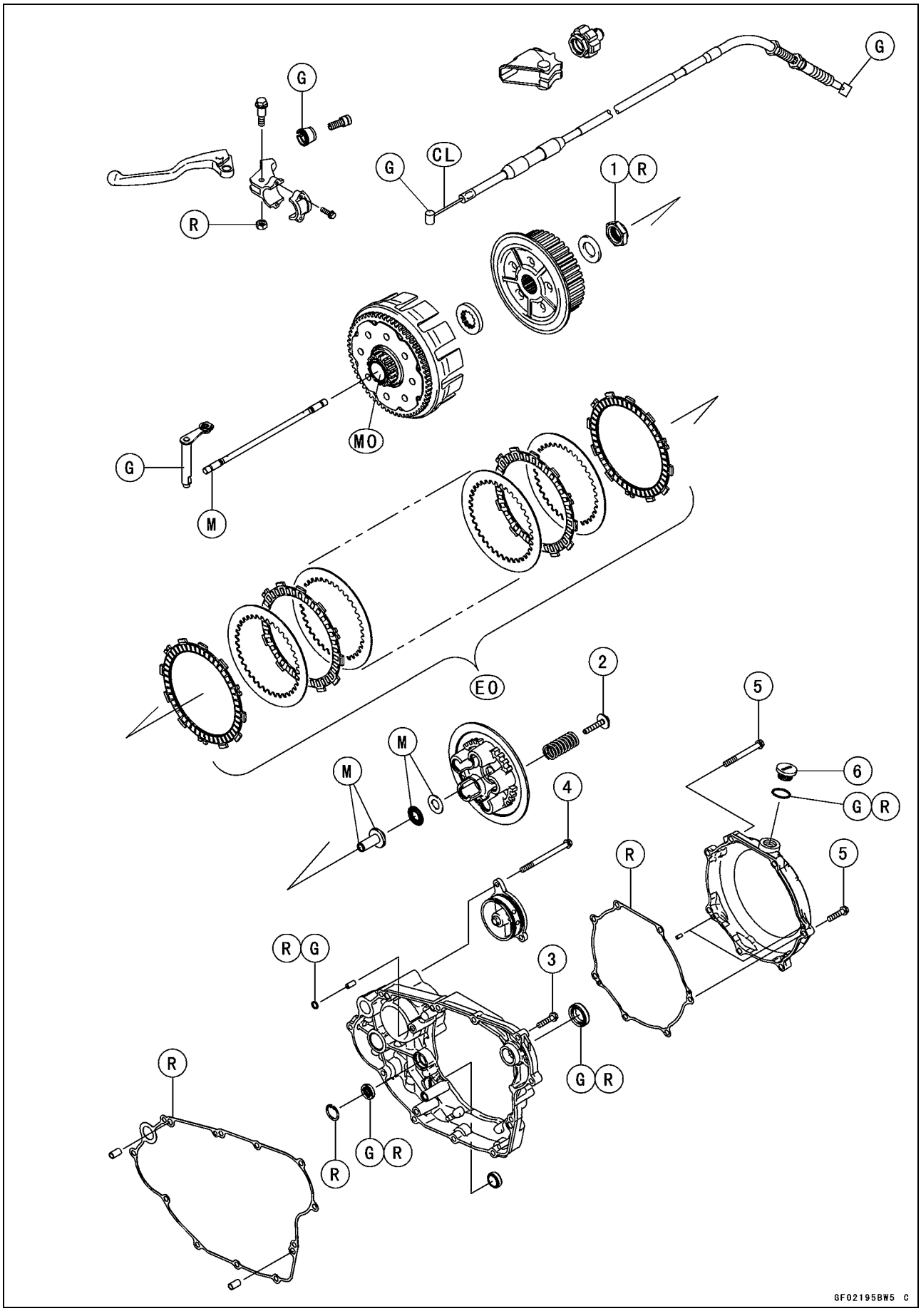

Exploded View

No.	Fastener	Torque			Remarks
		N·m	kgf·m	ft·lb	
1	Clutch Hub Nut	98	10	72	R
2	Clutch Spring Bolts	8.8	0.90	78 in·lb	
3	Right Engine Cover Bolts	9.8	1.0	87 in·lb	
4	Oil Filter Cap Bolt	9.8	1.0	87 in·lb	
5	Clutch Cover Bolts	9.8	1.0	87 in·lb	
6	Oil Filler Plug	3.5	0.36	31 in·lb	

CL: Apply cable lubricant.
EO: Apply engine oil.
G: Apply grease.
M: Apply molybdenum disulfide grease.
MO: Apply molybdenum disulfide oil solution.
(mixture of the engine oil and molybdenum disulfide grease in a weight ratio 10:1)
R: Replacement Parts

Specifications

Item	Standard	Service Limit
Clutch Lever		
Clutch Lever Free Play	8 ~ 13 mm (0.3 ~ 0.5 in.)	– – –
Clutch		
Friction Plate Thickness	2.92 ~ 3.08 mm (0.115 ~ 0.121 in.)	2.7 mm (0.11 in.)
Friction Plate Warp	0.15 mm (0.0059 in.) or less	0.3 mm (0.012 in.)
Steel Plate Warp	0.20 mm (0.0079 in.) or less	0.3 mm (0.012 in.)
Clutch Spring Free Length	46.04 mm (1.813 in.)	43.9 mm (1.73 in.)
Friction Plate/Clutch Housing Clearance	0.20 ~ 0.60 mm (0.008 ~ 0.024 in.)	0.8 mm (0.04 in.)

Special Tools

Inside Circlip Pliers:
57001-143

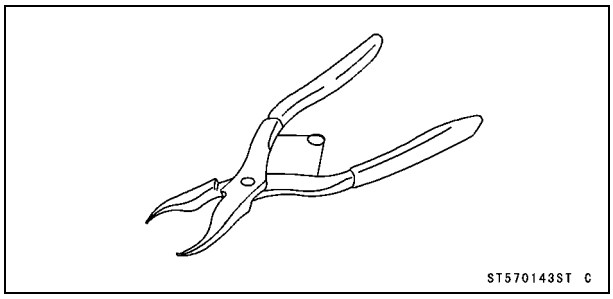

Bearing Driver Set:
57001-1129

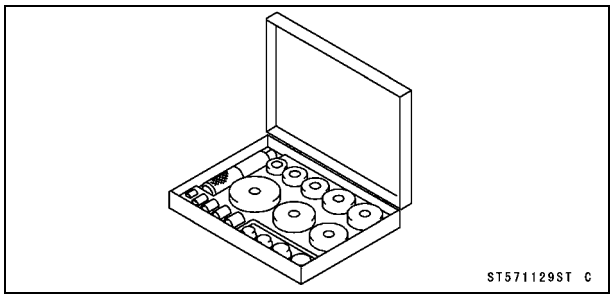

Clutch Holder:
57001-1243

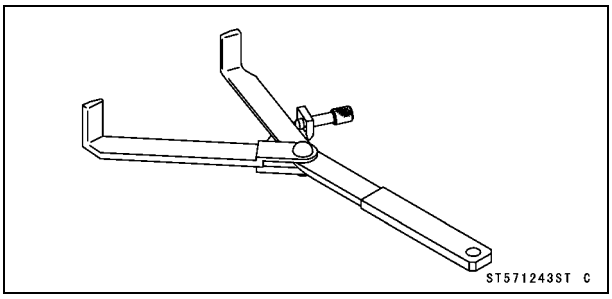

Clutch Lever and Cable

Due to friction plate wear and clutch cable stretch over a long period of use, the clutch must be adjusted in accordance with the Periodic Maintenance Chart.

⚠ WARNING

The engine and exhaust system get extremely hot during normal operation and can cause serious burns. Never touch the engine or exhaust pipe during clutch adjustment.

Clutch Lever (Clutch Cable) Free Play Inspection

- Refer to the Clutch Operation Inspection in the Periodic Maintenance chapter.

Clutch Lever (Clutch Cable) Free Play Adjustment

- Refer to the Clutch Operation Inspection in the Periodic Maintenance chapter.

Clutch Lever Installation

- Install the clutch lever assembly [A] position as shown in the figure.
  25 ~ 35° [B]
  Horizontal Line of Frame [C]
  170 mm (6.69 in.) [D]

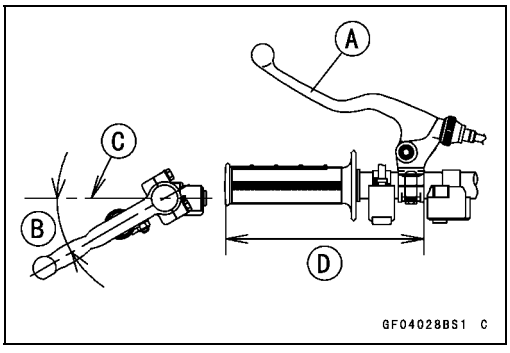

Clutch Cable Removal

- Remove:
  Number Plate (see Number Plate Removal in the Frame chapter)
  Left Radiator Shroud (see Radiator Shroud Removal in the Frame chapter)
  Left Radiator Screen (see Radiator Removal in the Cooling System chapter)
- Slide the dust cover [A].
- Loosen the locknut [B] and screw in the adjuster [C] fully.

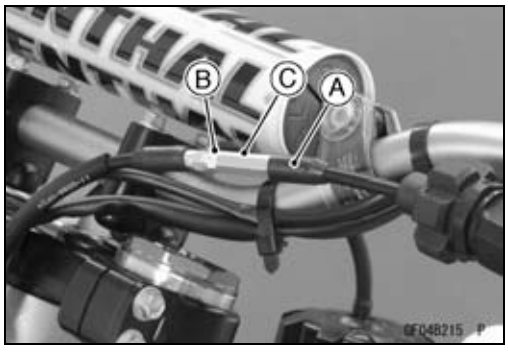

- Slide the dust cover [A] and the knob [B] out of place.

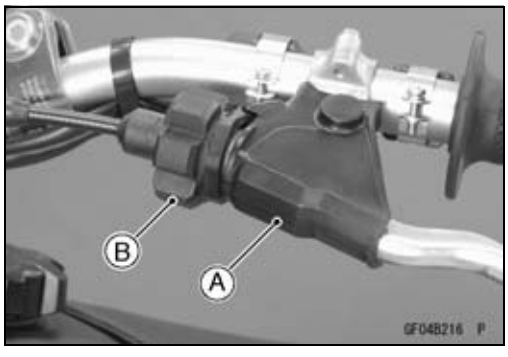

Clutch Lever and Cable

- Align the slit [A] of the adjusting nut to the slit [B] of the clutch lever.
- Free the clutch cable upper end from the clutch lever.

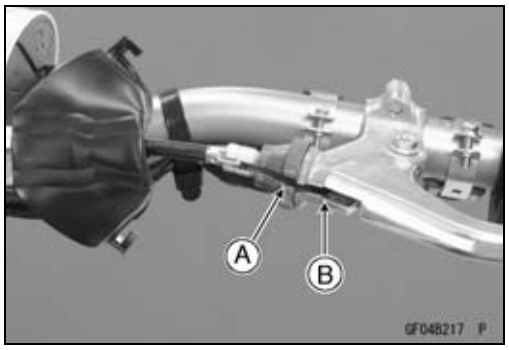

- Loosen the adjusting nuts [A] fully.
- Free the clutch cable lower end [B] from the clutch release lever [C].

NOTICE
Do not remove the clutch release shaft unless it is absolutely necessary. If removed, release shaft oil seal must be replaced with a new one.

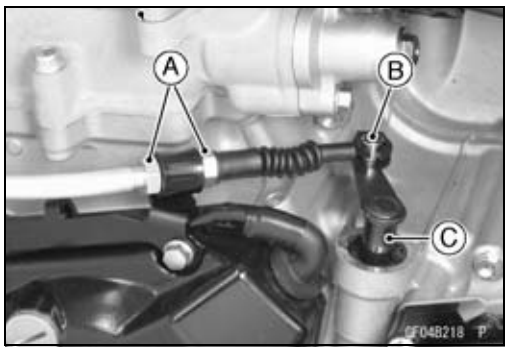

KX450FC

- Remove:
  Radiator Mounting Bolt [A]
  Clamp [B]
  Washer
- Open the clamp [C].
- Pull the clutch cable out of the frame.

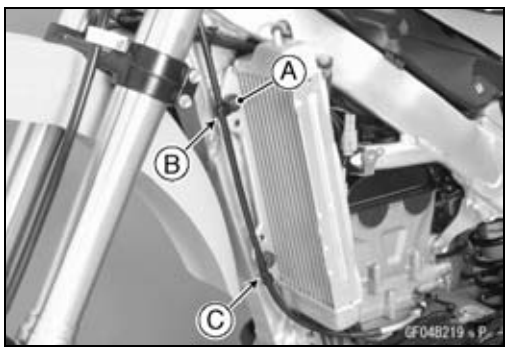

KX450FD ~

- Open the clamps [A].
- Pull the clutch cable out of the frame.

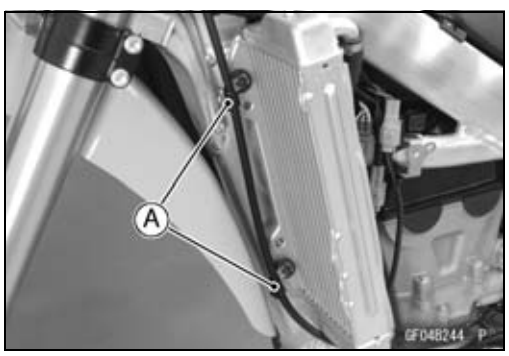

Clutch Cable Installation

- When installing the adjusting nut, apply grease to the lips [A] of adjusting nut.

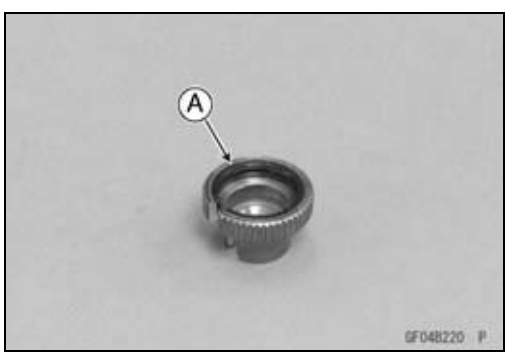

Clutch Lever and Cable

- Install the clutch cable with the threads width as shown in the figure.
  5 ±2 mm (0.2 ±0.08 in.) [A]
- Run the clutch cable correctly (see Cable, Wire, and Hose Routing section in the Appendix chapter).
- Adjust the clutch cable (see Clutch Lever Free Play Adjustment in the Periodic Maintenance chapter).
- Install the removed parts (see appropriate chapters).

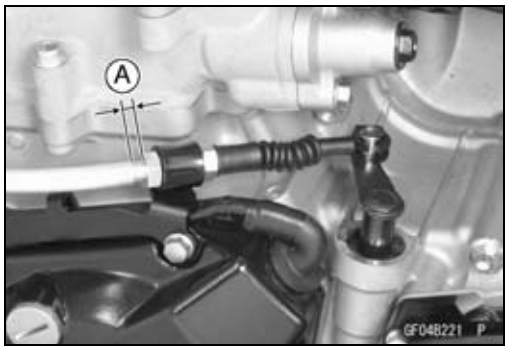

Clutch Cable Inspection and Lubrication

- During a periodic inspection or when the cable has been removed, inspect and lubricate the cable (see General Lubrication and Cable Inspection section in the Periodic Maintenance chapter).

Clutch Cover and Right Engine Cover

Clutch Cover Removal

- Drain the engine oil (see Engine Oil Change in the Periodic Maintenance chapter).
- Remove:
  Rear Master Cylinder Mounting Bolts [A]
  Brake Pedal Bolt [B]
  Brake Pedal Return Spring [C]

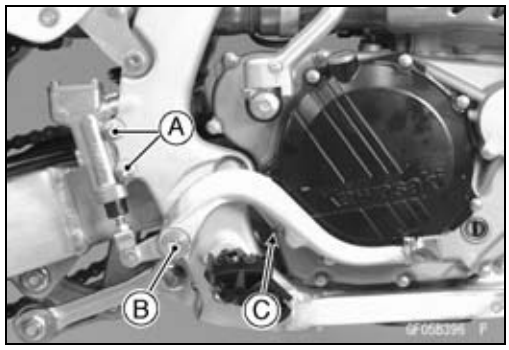

- Remove:
  Clutch Cover Bolts [A]
  Clutch Cover [B]

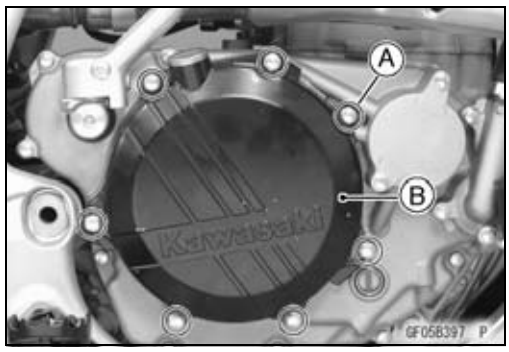

Clutch Cover Installation

- Be sure to install the dowel pins [A].
- Replace the clutch cover gasket [B] with a new one.

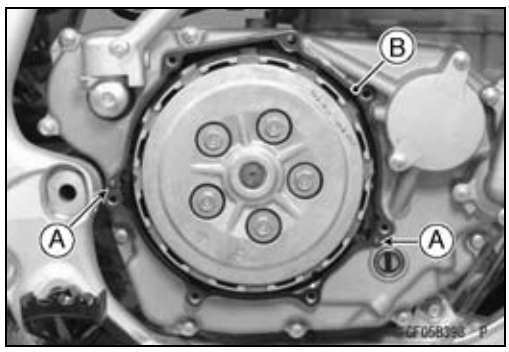

- Install the clutch cover.
- Tighten:

Torque - Clutch Cover Bolts: 9.8 N·m (1.0 kgf·m, 87 in·lb)

L = 60 mm (2.4 in.) [A]
L = 25 mm (1.0 in.) [B]

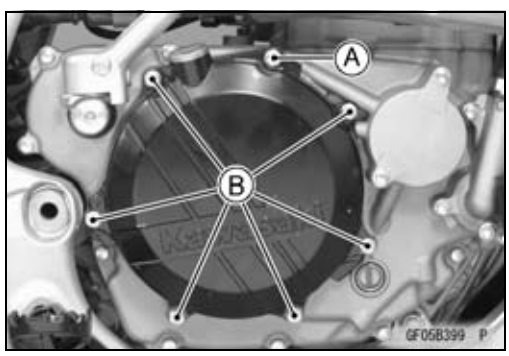

Right Engine Cover Removal

- Drain:
  Engine Oil (see Engine Oil Change in the Periodic Maintenance chapter)
  Coolant (see Coolant Draining in the Cooling System chapter)

Clutch Cover and Right Engine Cover

- Remove:
  Kick Pedal (see Kick Pedal Removal in the Crankshaft/Transmission chapter)
  Rear Master Cylinder Mounting Bolts [A]
  Brake Pedal Bolt [B]
  Brake Pedal Return Spring [C]

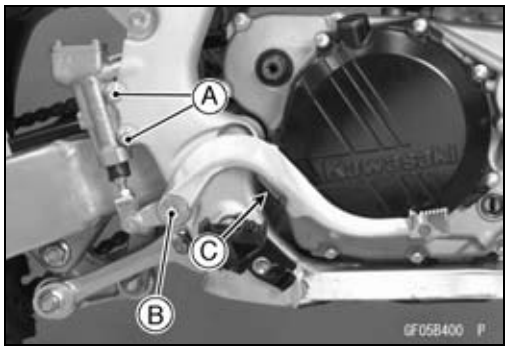

- Remove:
  Bolt [A]
  Right Engine Guard [B]

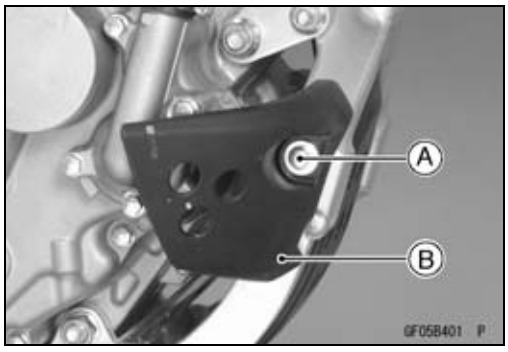

- Remove:
  Water Pump Cover (see Water Pump Cover Removal in the Cooling System chapter)
  Clutch Cover Bolt [A]
  Oil Filter Cap Bolt [B]
  Right Engine Cover Bolts [C]
  Right Engine Cover [D]

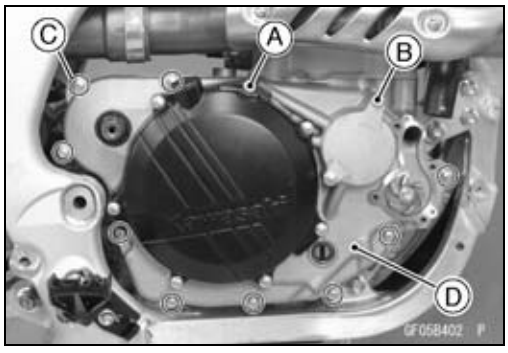

Right Engine Cover Installation

- Install the dowel pins [A].
- Replace the O-rings [B] with new ones.
- Replace the right engine cover gasket [C] with a new one.
- Wrap the spline [D] of the kick shaft with the vinyl tape to prevent damage.
- Apply grease to the O-rings and install them to the crankcase.

○Install the lower O-ring so that the tapered side facing outside.

- Apply a grease to the kick shaft oil seal lip.

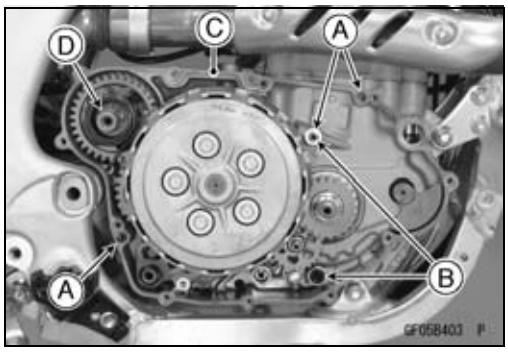

- When installing the cover does not go well, the cover is installed according to the following procedures.

○Install the cover while turning the impeller [A].

- Tighten:

Torque - Right Engine Cover Bolts: 9.8 N·m (1.0 kgf·m, 87 in·lb)
Clutch Cover Bolt: 9.8 N·m (1.0 kgf·m, 87 in·lb)
Oil Filter Cap Bolt: 9.8 N·m (1.0 kgf·m, 87 in·lb)

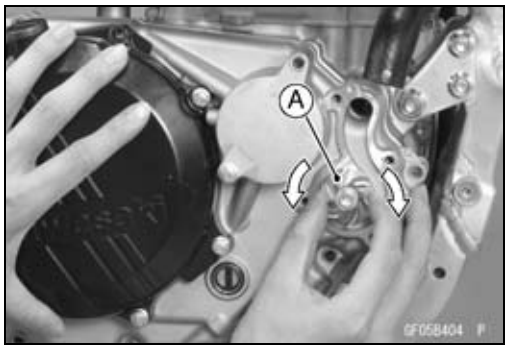

Clutch Cover and Right Engine Cover

- Remove the vinyl tape from the kick shaft.
- Install:
  Water Pump Cover (see Water Pump Cover Installation in the Cooling System chapter)
  Right Engine Guard (see Engine Guard Installation in the Frame chapter)
  Rear Master Cylinder (see Rear Master Cylinder Installation in the Brakes chapter)
  Brake Pedal (see Brake Pedal Installation in the Brakes chapter)
  Kick Pedal (see Kick Pedal Installation in the Crankshaft/Transmission chapter)
- Pour:
  Engine Oil (see Engine Oil Change in the Periodic Maintenance chapter)
  Coolant (see Coolant Filling in the Cooling System chapter)
- Check the rear brake effectiveness (see Brakes section in the Periodic Maintenance chapter).

Right Engine Cover Assembly

- Refer to the Oil Seal and Bearing Installation in the Cooling System chapter for water pump oil seals and bearings installation.
- Replace the removed oil seal and circlip with new ones.
- Press the crankshaft oil seal [A] until it bottomed as shown in the figure.

  Special Tool - Bearing Driver Set: 57001-1129
- Install the circlip [B].

  Special Tool - Inside Circlip Pliers: 57001-143

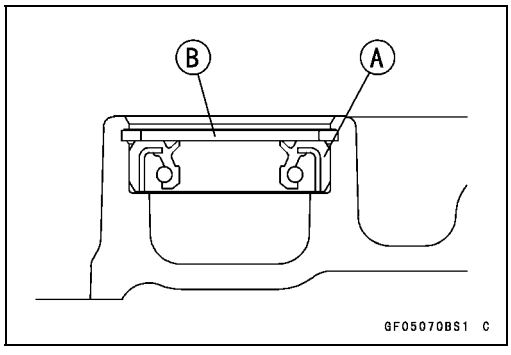

- Press the kick shaft oil seal [A] so that the bearing surface flush with the right engine cover surface [B].

  Special Tool - Bearing Driver Set: 57001-1129
- Apply grease to the oil seal lips.

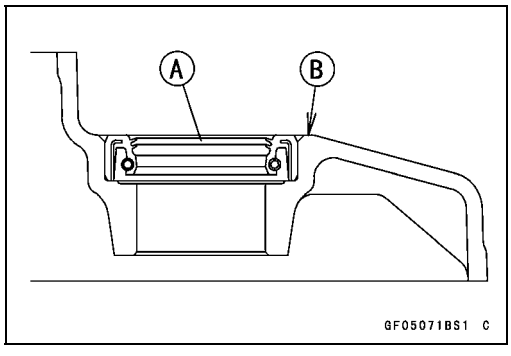

Clutch

Clutch Removal

- Drain the engine oil (see Engine Oil Change in the Periodic Maintenance chapter).
- Remove:
  Clutch Cover (see Clutch Cover Removal)
  Clutch Spring Bolts [A]
  Clutch Springs
  Clutch Spring Plate [B]

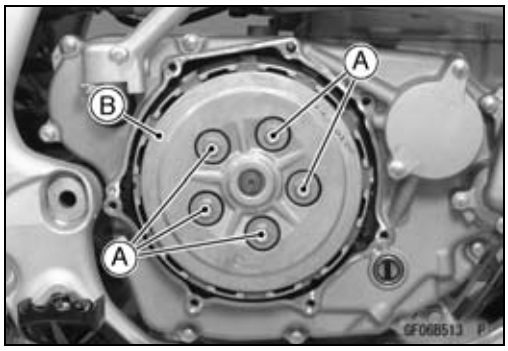

- Remove:
  Washer [A]
  Needle Bearing [B]
  Push Rod Holder [C]
  Push Rod
  Friction Plates [D]
  Steel Plates [E]

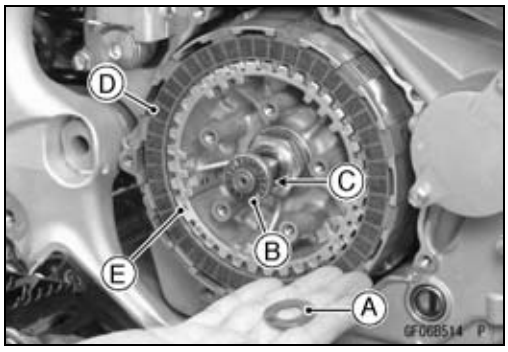

NOTE

○*The two plates at both ends are different from the plate installed between these plates. However, it is impossible to identify it on externals.*

○*Mark and record the locations of the both side friction plates so that they can be reinstalled in their original positions.*

- Hold the clutch hub [A] with the clutch holder [B].
  Special Tool - Clutch Holder: 57001-1243
- Remove the clutch hub nut [C].

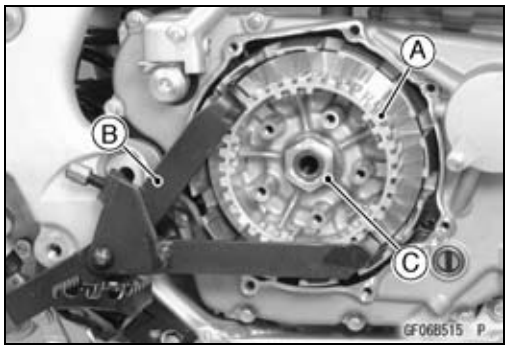

- Remove:
  Washer [A]
  Clutch Hub [B]

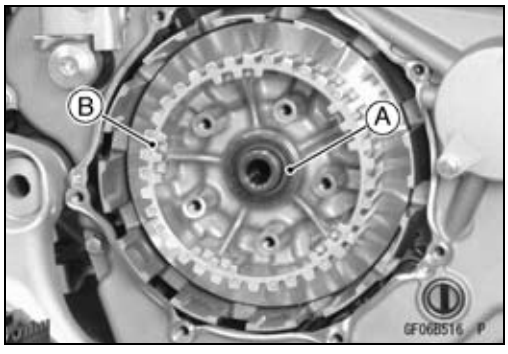

Clutch

- Remove:
  Toothed Washer [A]
  Clutch Housing [B]

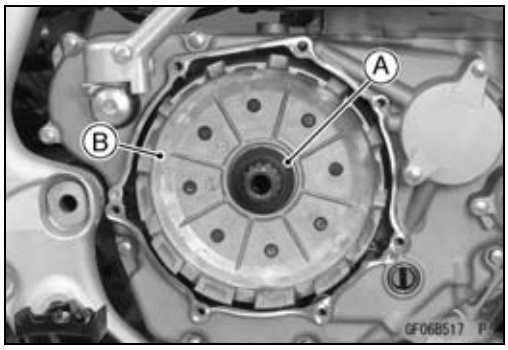

Clutch Installation

- Check the clutch plate assembly free play (see Clutch Plate Assembly Free Play Inspection/Adjustment).
- Apply molybdenum disulfide oil to the inside [A] of the clutch housing.
- Install:
  Clutch Housing [B]
  Toothed Washer [C]

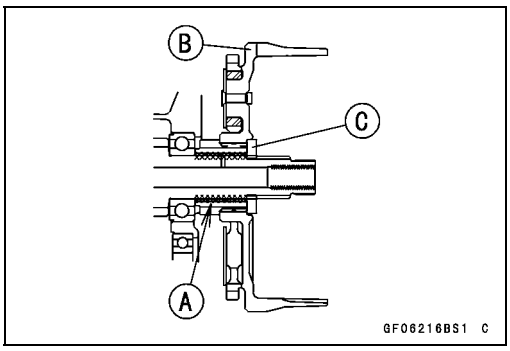

- Install the clutch hub [A].
- Install the washer [B] so that the “OUT SIDE” mark [C] faces outward.

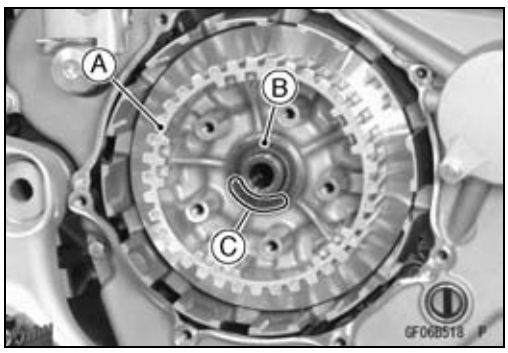

- Replace the clutch hub nut [A] with a new one.
- Hold the clutch hub [B] with the clutch holder [C], and tighten the clutch hub nut.

  Special Tool - Clutch Holder: 57001-1243

  Torque - Clutch Hub Nut: 98 N·m (10 kgf·m, 72 ft·lb)

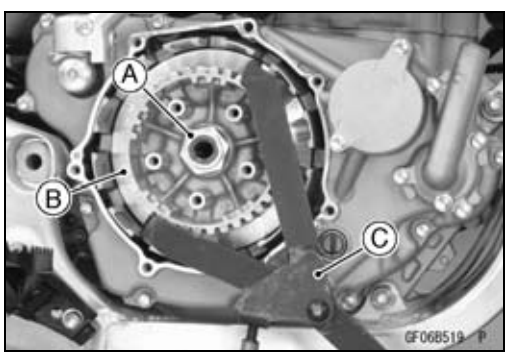

- Install the friction plates and steel plates, starting with a friction plate and alternating them. Finishing with a friction plate [A].

NOTE

○*Install the both ends of friction plates, which are marked when disassembled, to the their original position.*

○*When replace the friction plates with new ones, mark the both end two friction plates so that the two kinds of friction plates do not mix up at opening the package.*

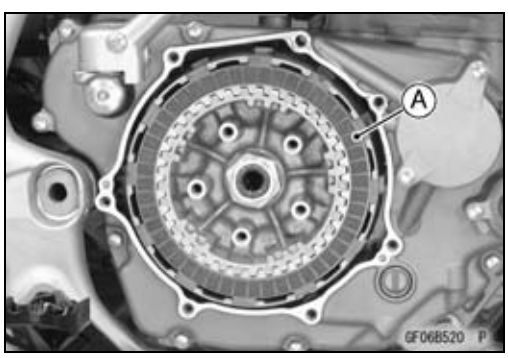

NOTICE
If new dry steel plates and friction plates are installed, apply engine oil to the surfaces of each plate to avoid clutch plate seizure.

Clutch

- Apply molybdenum disulfide grease to the push rod end [A] sliding portion [B] of the push rod holder.

NOTE

○*Do not close the oil passage hole on the push rod holder with the molybdenum disulfide grease.*

- Install the push rod and push rod holder.
- Apply molybdenum disulfide grease to the needle bearing [C] and washer [D], and install them.

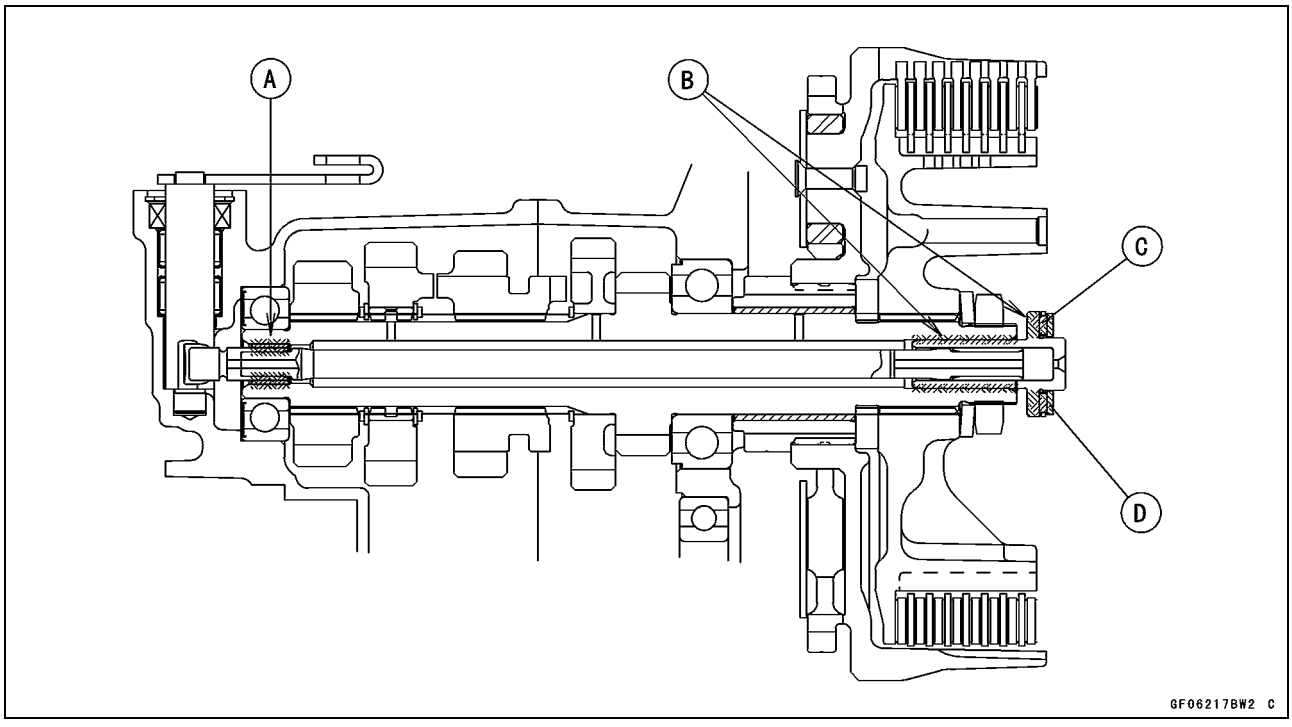

- Install the clutch spring plate [A] and clutch springs.
- Tighten:

Torque - Clutch Spring Bolts [B]: 8.8 N·m (0.90 kgf·m, 78 in·lb)

- Install the clutch cover (see Clutch Cover Installation).

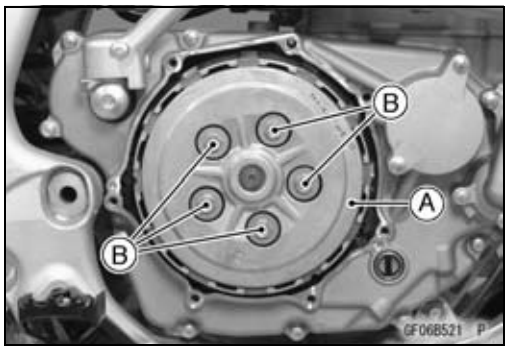

Clutch

- Check the release shaft lever position.
- Pushing [A] the release shaft lever [B] lightly forward, measure the distance [C] between the release shaft lever and bracket [D].

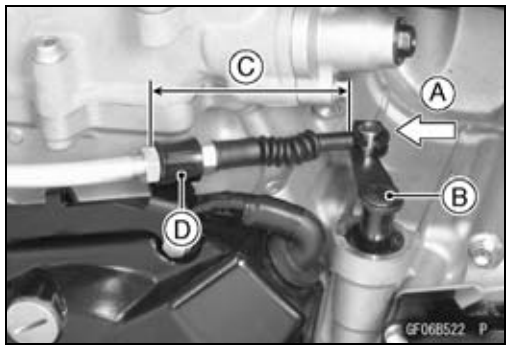

Release Shaft Lever Position
Standard: 68.6 ~ 76.4 mm (2.70 ~ 3.01 in.)

★If the lever position is not within the standard, select the correct thickness of adjusting washer(s) according to the tables shown.

Adjusting Washers

Thickness	Part Number
1.5 mm (0.06 in.)	92200-1548
1.0 mm (0.04 in.)	92200-0045

Release Shaft Lever Position and Adjusting Washer Selection

Position Distance	Judgment	Washers Thickness	Qty
68.6 ~ 76.4 mm (2.70 ~ 3.01 in.)	Standard	1.5 mm (0.06 in.)	1
More than 76.4 mm (3.01 in.)	Too big	1.0 mm (0.04 in.)	1
Less than 68.6 mm (2.70 in.)	Too small	1.0 mm (0.04 in.)	2

★If the replacement of the adjusting washer is necessary, remove the clutch spring plate again and install the selected washer [A].

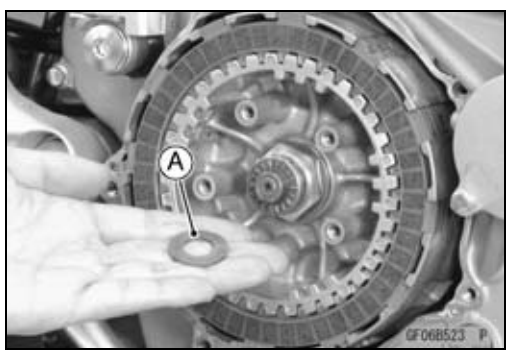

Clutch

Clutch Plate Assembly Free Play Inspection/Adjustment

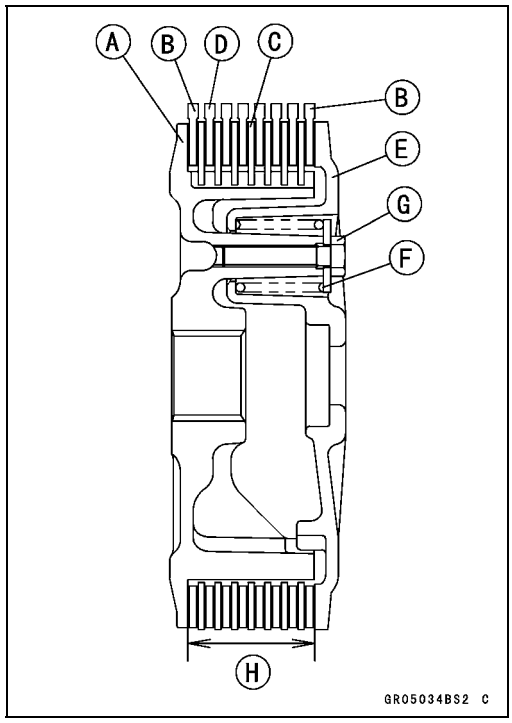

- Assemble the following parts.
  Clutch Hub [A]
  Friction Plates [B]
  Steel Plates [C]
  Friction Plates [D]
  Spring Plate [E]
  Spring [F]
  Bolts [G]

NOTE

○*Install the both ends of friction plates, which are marked when disassembled, to the their original position.*

- Tighten:

Torque - Clutch Spring Bolts: 8.8 N·m (0.90 kgf·m, 78 in·lb)

- Measure the clutch plate assembly length [H].

Clutch Plate Assembly Length
Standard: 34.9 ~ 35.5 mm (1.37 ~ 1.40 in.)

★If length is not within the standard, select the correct length of steel plates according to the table shown.

Thickness	Part Number
1.2 mm (0.047 in.)	13089-1010
1.6 mm (0.063 in.) (STD)	13089-1095
2.0 mm (0.079 in.)	13089-1005

NOTE

○*Do not use the steel plate of 1.2 mm (0.047 in.) and 2.0 mm (0.079 in.) thickness at the same time.*

Release Shaft Removal

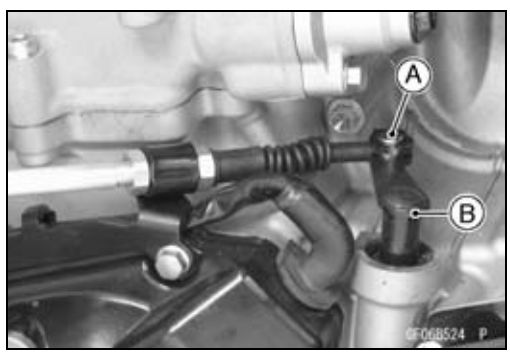

NOTICE
Do not remove the clutch release shaft unless it is absolutely necessary. If removed, release shaft oil seal must be replaced with a new one.

- Remove:
  Clutch (see Clutch Removal)
- Remove the tip [A] of the clutch cable (see Clutch Cable Removal).
- Pull out the release shaft assembly [B].

Release Shaft Installation

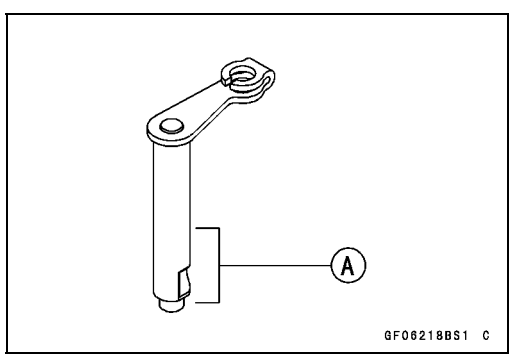

- Apply engine oil to the needle bearings in the hole of the crankcase.
- Apply grease to the release shaft lower end [A] and oil seal lips.
- Insert the release shaft straight into the hole of the crankcase.

NOTICE
When inserting the release shaft, be careful not to remove the spring of the oil seal.

- Install the removed parts (see appropriate chapters).

Clutch

Clutch Plates Wear, Damage Inspection

- Refer to the Clutch Plates Inspection in the Periodic Maintenance chapter.

Clutch Plates Warp Inspection

- Refer to the Clutch Plates Inspection in the Periodic Maintenance chapter.

Clutch Spring Free Length Inspection

- Measure the free length [A] of the clutch springs.

★If any clutch spring is shorter than the service limit, it must be replaced.

Clutch Spring Free Length

Standard:	**46.04 mm (1.813 in.)**
Service Limit:	**43.9 mm (1.73 in.)**

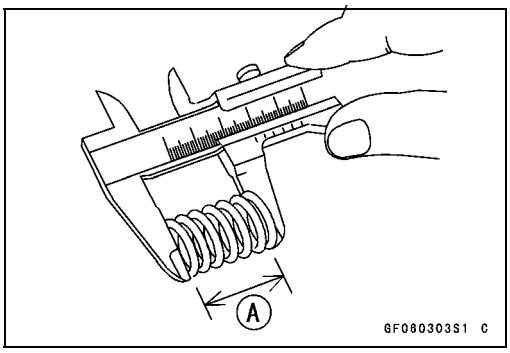

Clutch Housing Finger Damage Inspection

- Visually inspect the clutch housing fingers [A] that come in contact with the friction plate tangs.

★If they are damaged or if there are groove cuts in the areas that come in contact with the tangs, replace the housing. Replace the friction plates if their tangs are damaged as well.

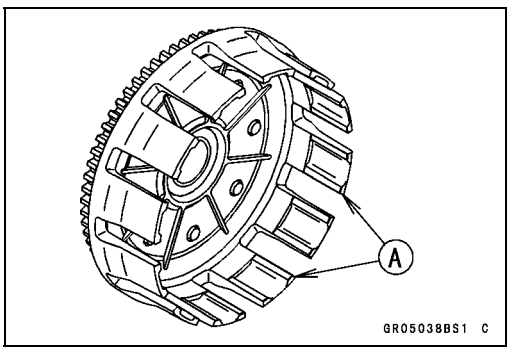

Friction Plate/Clutch Housing Clearance Inspection

- Measure the clearance [A] between the tangs [B] on the friction plate and the fingers [C] of the clutch housing.

★If this clearance is excessive, the clutch will be noisy.

★If the clearance exceeds the service limit, replace the friction plates.

Friction Plate/Clutch Housing Clearance

Standard:	**0.20 ~ 0.60 mm (0.008 ~ 0.024 in.)**
Service Limit:	**0.8 mm (0.04 in.)**

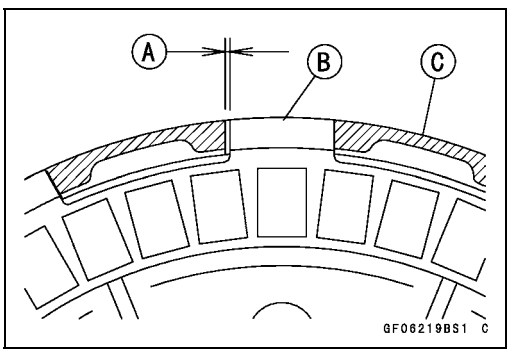

Clutch Hub Spline Damage Inspection

- Visually inspect the areas of the clutch hub splines that come in contact with the teeth of the steel plates.

★If there are notches worn into the clutch hub splines [A], replace the clutch hub. Replace the steel plates if their teeth are damaged as well.

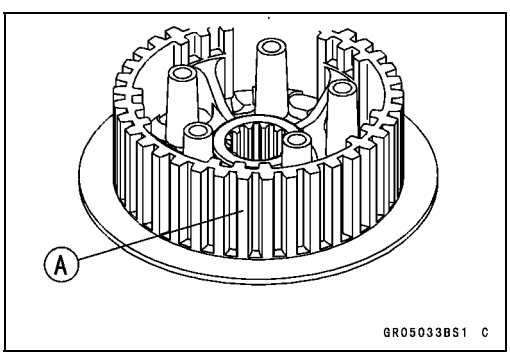

Engine Lubrication System

Table of Contents

Exploded View 7-2
Lubrication System Chart 7-4
Specifications 7-6
Special Tools 7-7
Engine Oil and Oil Filter 7-8
- Engine Oil Level Inspection 7-8
- Engine Oil Change 7-8
- Oil Filter Replacement 7-9
- Oil Screen (Scavenge) Removal 7-9
- Oil Screen (Scavenge) Installation 7-9
- Oil Screen (Feed) Removal 7-9
- Oil Screen (Feed) Installation 7-9
- Oil Screen (Scavenge) Cleaning 7-10
- Oil Screen (Feed) Cleaning 7-11

Oil Pressure Relief Valve 7-12
- Oil Pressure Relief Valve Removal 7-12
- Oil Pressure Relief Valve Installation 7-12
- Oil Pressure Relief Valve Inspection 7-12

Oil Pump 7-13
- Oil Pump (Scavenge) Removal 7-13
- Oil Pump (Scavenge) Installation 7-13
- Oil Pump (Feed) Removal 7-14
- Oil Pump (Feed) Installation 7-14
- Oil Pump Inspection 7-15

Oil Pressure 7-16
- Oil Pressure Measurement 7-16

Exploded View

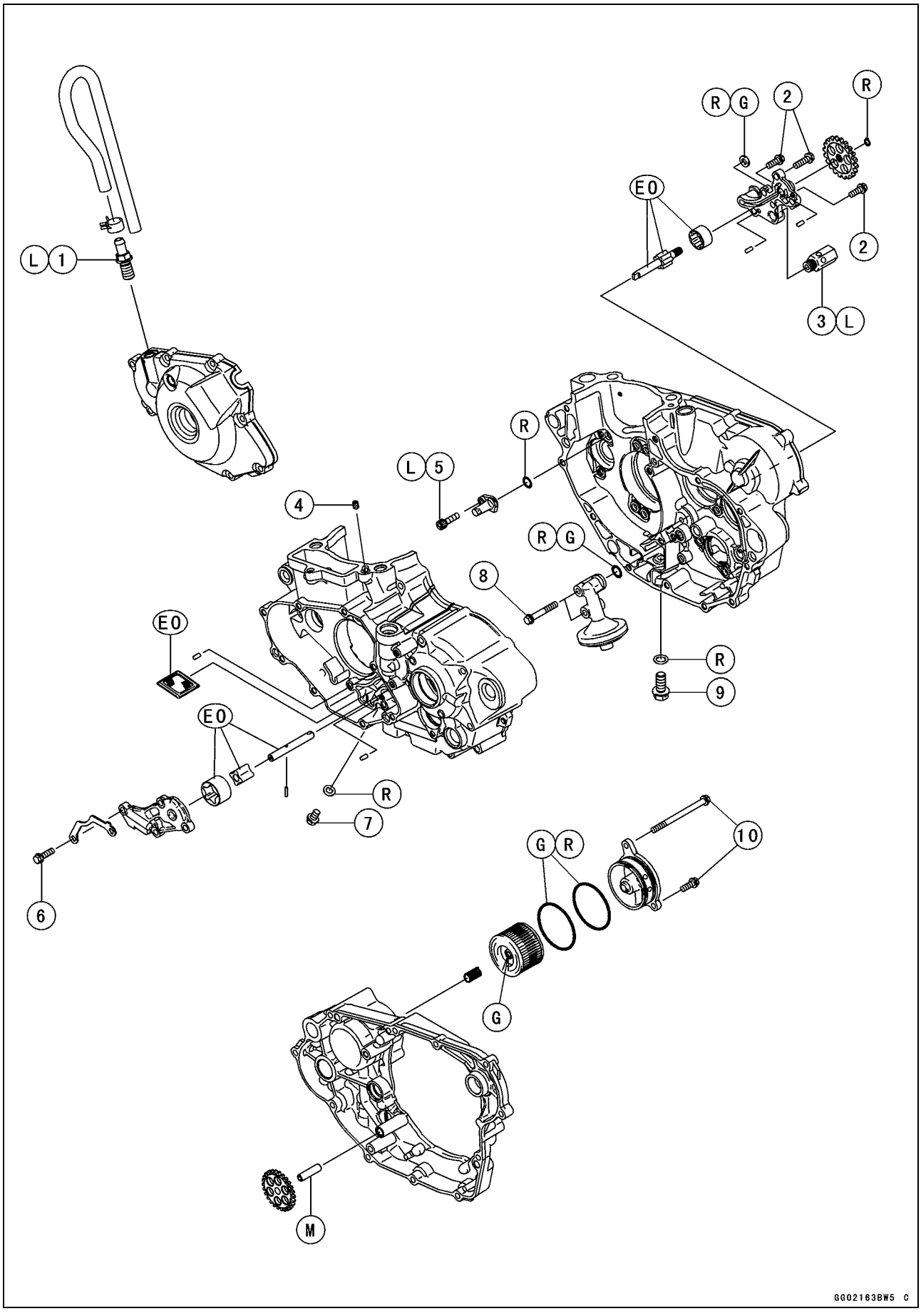

Exploded View

No.	Fastener	Torque			Remarks
		N·m	kgf·m	ft·lb	
1	Breather Fitting	15	1.5	11	L
2	Oil Pump (Feed) Cover Bolts	9.8	1.0	87 in·lb	
3	Oil Pressure Relief Valve	15	1.5	11	L
4	Piston Oil Nozzle	3.0	0.31	27 in·lb	
5	Piston Oil Nozzle Bolt	7.0	0.71	62 in·lb	L
6	Oil Pump (Scavenge) Cover Bolts	9.8	1.0	87 in·lb	
7	Engine Oil Drain Bolt (M6)	7.0	0.71	62 in·lb	
8	Oil Screen (Feed) Mounting Bolts	9.8	1.0	87 in·lb	
9	Engine Oil Drain Bolt (M10)	20	2.0	15	
10	Oil Filter Cap Bolts	9.8	1.0	87 in·lb	

EO: Apply engine oil.
G: Apply grease.
L: Apply a non-permanent locking agent.
M: Apply molybdenum disulfide grease.
R: Replacement Parts

Lubrication System Chart

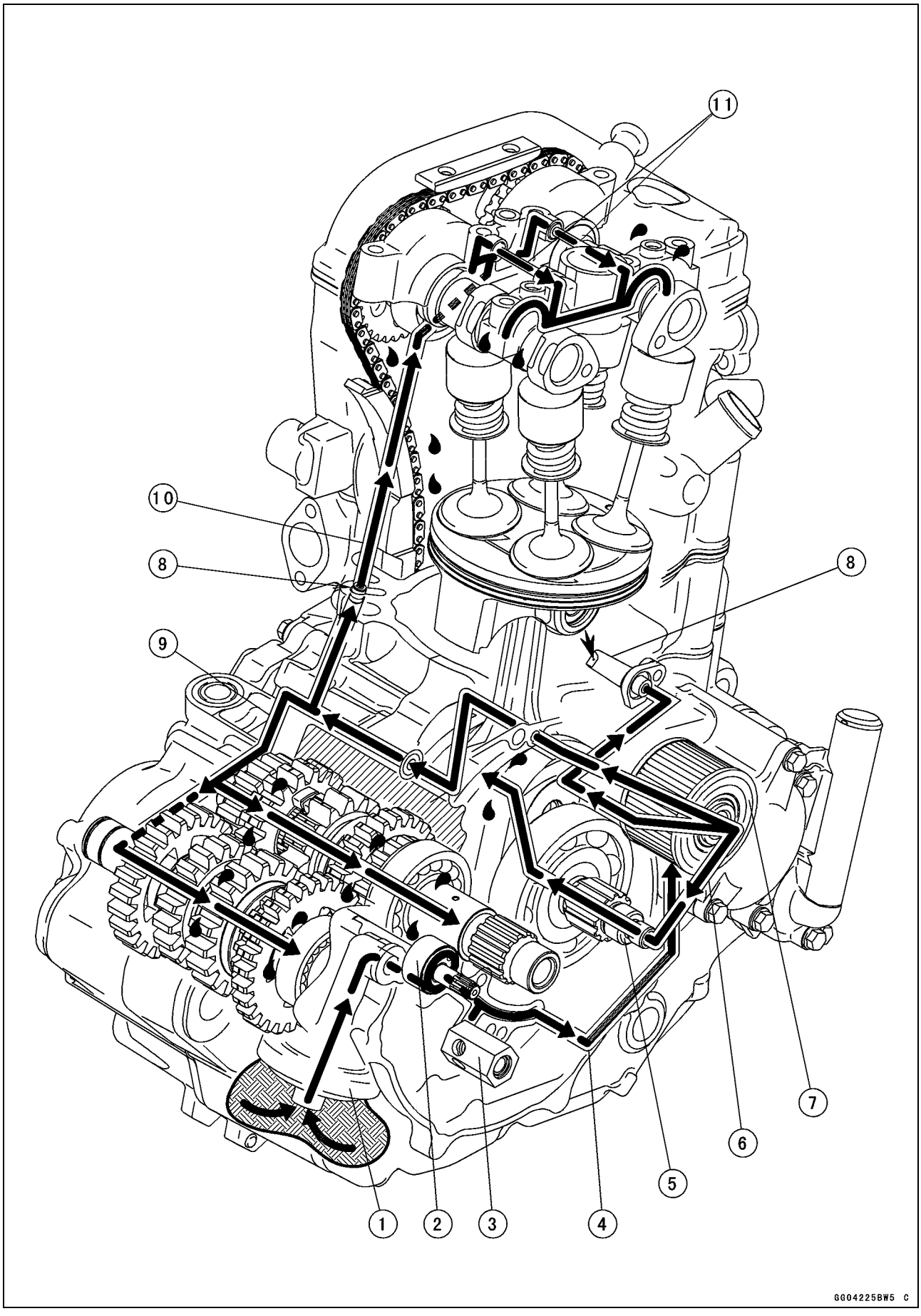

Lubrication System Chart

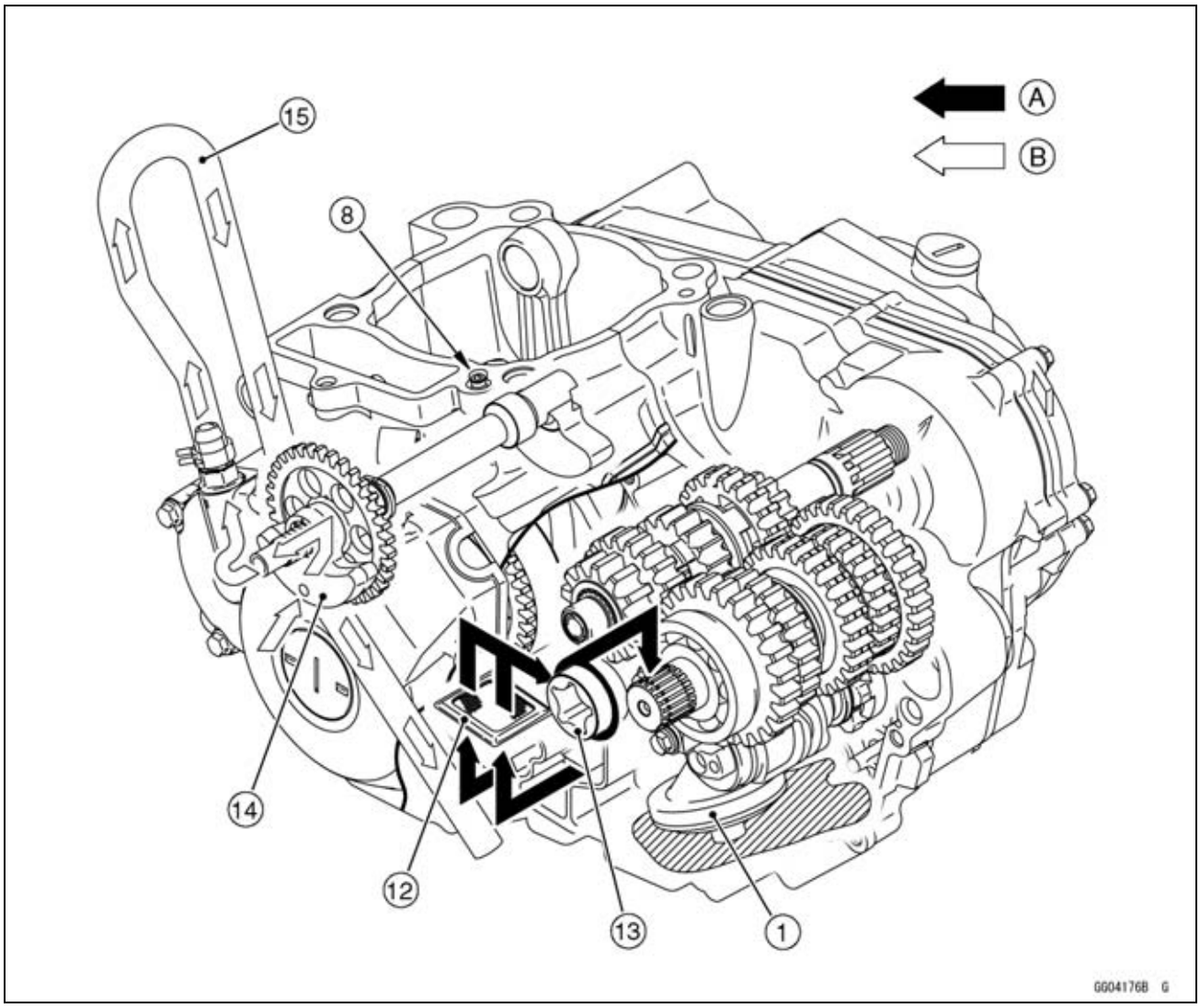

1. Oil Screen (Feed)
2. Oil Pump (Feed)
3. Oil Pressure Relief Valve
4. Right Engine Cover Oil Passage (from Feed Oil Pump to Oil Filter)
5. Crankshaft
6. Right Engine Cover Oil Passage (from Oil Filter to Crankshaft)
7. Oil Filter
8. Piston Oil Nozzles
9. Left Crankcase Oil Passage (from Oil Filter to Transmission Oil Passage)
10. Cylinder Oil Passage (from Crankcase Oil Passage to Cylinder Head Oil Passage)
11. Oil Pipes
12. Oil Screen (Scavenge)
13. Oil Pump (Scavenge)
14. Balancer Weight
15. Breather Hose

A: Engine Oil
B: Blowby Gas

Specifications

Item	Standard
Engine Oil	
Type	Castrol “POWER1 Racing 4T” 5W-40 or API SG, SH, SJ, SL or SM with JASO MA, MA1 or MA2
Viscosity	SAE 10W-30, 10W-40, or 10W-50
Capacity	0.96 L (1.01 US qt) (when filter is not removed) 0.98 L (1.04 US qt) (when filter is removed) 1.20 L (1.27 US qt) (when engine is completely dry)
Oil Level	Between upper and lower level lines (after warm-up or driving)
Oil Pressure Measurement	
Oil Pressure	20 ~ 70 kPa (0.20 ~ 0.71 kgf/cm², 2.9 ~ 10 psi) at 4 000 r/min (rpm), Oil Temperature 40°C (104°F)

Special Tools

Oil Pressure Gauge, 5 kgf/cm²:
57001-125

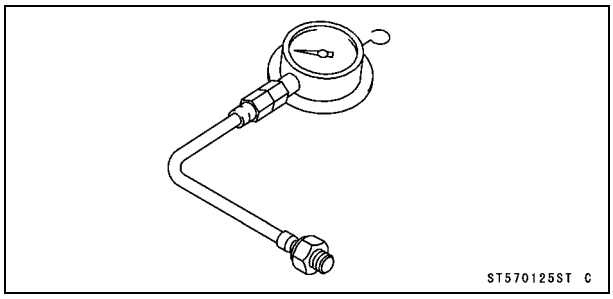

Oil Pressure Gauge Adapter, M10 × 1.25:
57001-1182

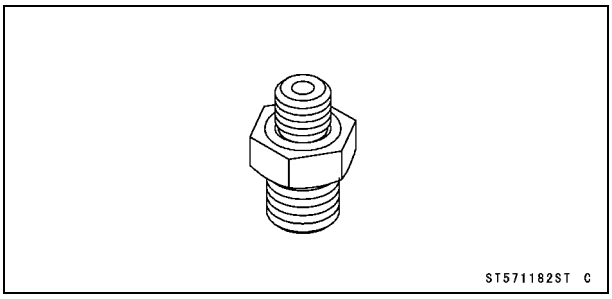

Outside Circlip Pliers:
57001-144

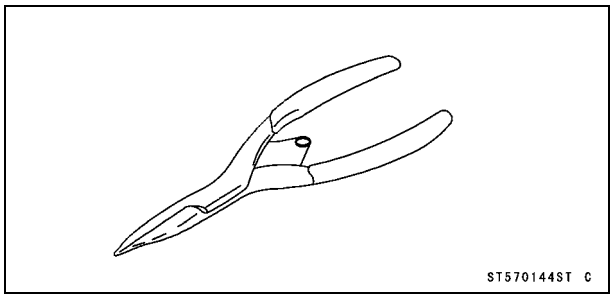

Oil Pressure Cap:
57001-1656

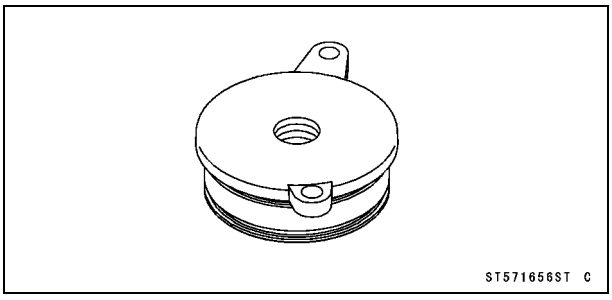

Engine Oil and Oil Filter

⚠ WARNING

Vehicle operation with insufficient, deteriorated, or contaminated engine oil will cause accelerated wear and may result in engine seizure, accident, and injury. Check the oil level before each use and change the oil and filter according to the periodic maintenance chart.

The engine oil level indicated in the oil inspection window gauge is very sensitive to the motorcycle's position and engine rpm at time of shut down. Because of the semi-dry sump lubrication system with separate oil chambers in the crank room and transmission room, under certain conditions oil can accumulate in the crank room and give a false low reading at the oil level inspection window, which indicates oil volume in the transmission room.

Engine Oil Level Inspection

- Situate the motorcycle so that it is vertical.
- Check that the engine oil level is between the upper [A] and lower [B] levels in the oil level inspection window.

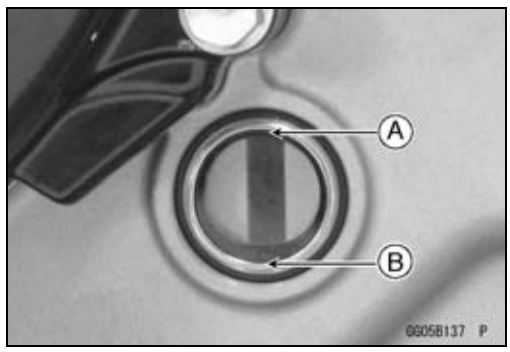

NOTE

○*If the motorcycle has just been used, wait several minutes for all the oil to drain down.*

○*If no oil appears in the oil level inspection window, tip the motorcycle slightly to the right until oil is visible then return to an upright position. If no oil appears even when tipped at an extreme angle, remove the drain bolt to empty any oil, reinstall the drain bolt and refill with the specified amount of oil.*

○*If the oil has just been changed, start the engine and run it for several minutes* ***at idle speed****. This fills the oil filter with oil.*

○***Do not run the engine at high engine speed.*** *Stop the engine, then wait several minutes until the oil settles.*

NOTICE

Racing the engine before the oil reaches every part can cause engine seizure.

★If the oil level is too high, remove the excess oil through the filler opening, using a syringe or some other suitable device.

★If the oil level is too low, add the correct amount of oil through the oil filler opening. Use the same type and make of oil that is already in the engine.

NOTE

○*If the engine oil type and make are unknown, use any brand of the specified oil to top off the level rather than running the engine with the oil level low. Then at your earliest convenience, change the oil completely.*

Engine Oil Change

- Refer to the Engine Oil Change in the Periodic Maintenance chapter.

Engine Oil and Oil Filter

Oil Filter Replacement

- Refer to the Oil Filter Replacement in the Periodic Maintenance chapter.

Oil Screen (Scavenge) Removal

- Remove:
  Oil Pump (Scavenge) Cover (see Oil Pump (Scavenge) Removal)
  Oil Screen [A]

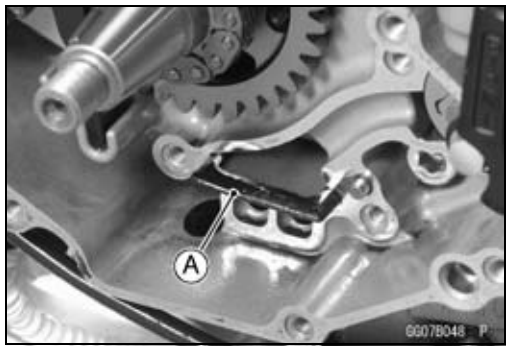

Oil Screen (Scavenge) Installation

- Clean the oil screen thoroughly whenever it is removed for any reason (see Oil Screen (Scavenge) Cleaning).
- Apply engine oil to the rubber portion [A] of the oil screen.
- Install the oil screen as shown in the figure.
  Carved Line [B]
  White Paint Mark [C]
- Install the oil pump (scavenge) cover (see Oil Pump (Scavenge) Installation).

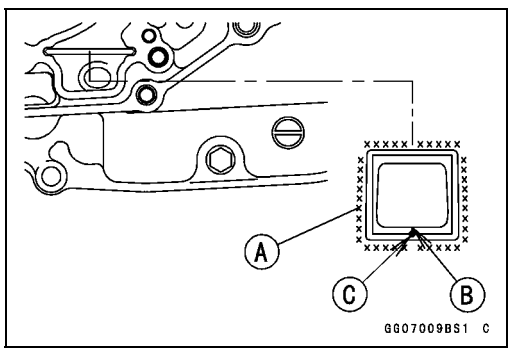

Oil Screen (Feed) Removal

- Split the crankcase (see Crankcase Disassembly in the Crankshaft/Transmission chapter).
- Remove:
  Bolts [A]
  Oil Screen [B]

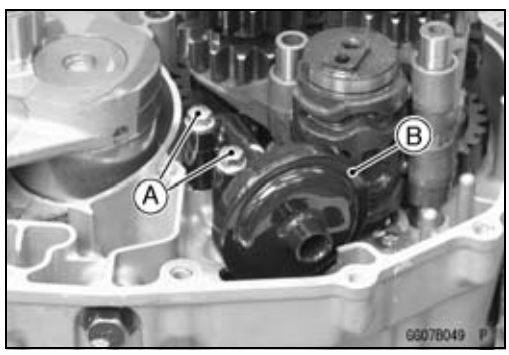

Oil Screen (Feed) Installation

- Clean the oil screen thoroughly whenever it is removed for any reason (see Oil Screen (Feed) Cleaning).
- Replace the O-ring [A] with a new one.
- Apply grease to the O-ring, and install it.

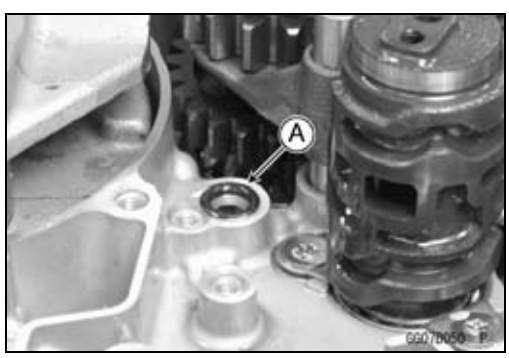

- Install the oil screen [A], and tighten the bolts [B].

  Torque - Oil Screen (Feed) Mounting Bolts: 9.8 N·m (1.0 kgf·m, 87 in·lb)

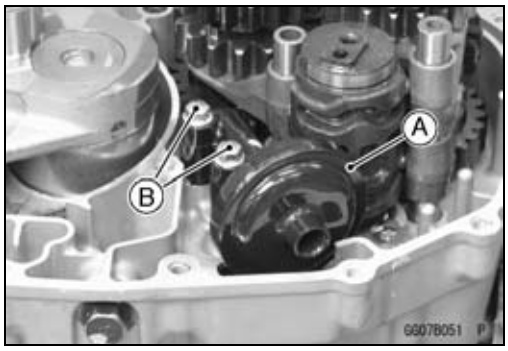

Oil Screen (Scavenge) Cleaning

- Remove the oil screen (see Oil Screen (Scavenge) Removal).
- Clean the oil screen with a high flash-point solvent and remove any particles stuck to them.

⚠ WARNING

Gasoline and low flash-point solvents can be flammable and/or explosive and cause severe burns. Clean the screen in a well-ventilated area, and take care that there are no sparks or flame anywhere near the working area; this includes any appliance with a pilot light. Do not use gasoline or a low flash-point solvent to clean the screen.

NOTE

○*While cleaning the screen, check for any metal particles that might indicate internal engine damage.*

- Check the screen [A] carefully for any damage.

★If the screen is damaged, replace it with a new one.

- Install the oil screen (see Oil Screen (Scavenge) Installation).

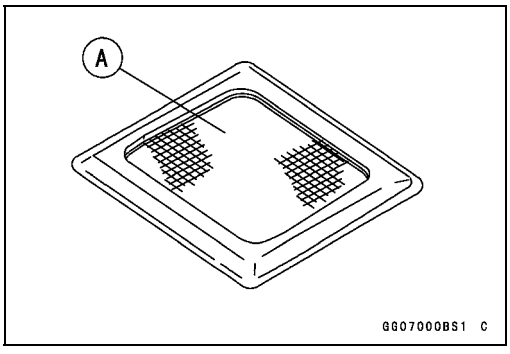

Engine Oil and Oil Filter

Oil Screen (Feed) Cleaning

- Remove the oil screen (see Oil Screen (Feed) Removal).
- Clean the oil screen with a high flash-point solvent and remove the particles stuck.
- Blow away the particles by applying compressed air [A] from the inside to the outside (from the clean side to the dirty side).

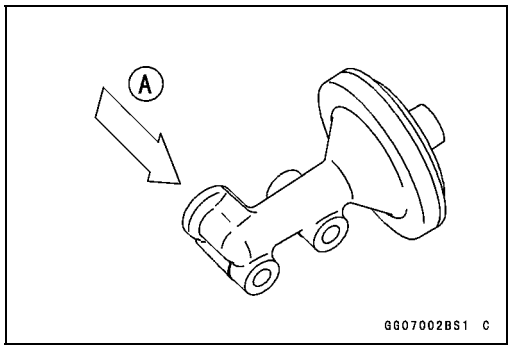

⚠ WARNING

Gasoline and low flash-point solvents can be flammable and/or explosive and cause severe burns. Clean the screen in a well-ventilated area, and take care that there are no sparks or flame anywhere near the working area; this includes any appliance with a pilot light. Do not use gasoline or a low flash-point solvent to clean the screen.

NOTE

○*While cleaning the screen, check for any metal particles that might indicate internal engine damage.*

- Check the screen carefully for any damage.

★If the screen is damaged, replace the oil screen with a new one.

- Install the oil screen (see Oil Screen (Feed) Installation).

Oil Pressure Relief Valve

Oil Pressure Relief Valve Removal

- Remove:
  Right Engine Cover (see Right Engine Cover Removal in the Clutch chapter)
  Oil Pressure Relief Valve [A]

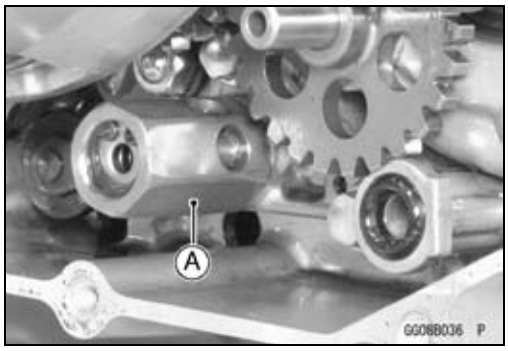

Oil Pressure Relief Valve Installation

- Apply a non-permanent locking agent to the threads of the oil pressure relief valve, and tighten it.

NOTICE
Do not apply too much non-permanent locking agent to the threads. This may block the oil passage.

Torque - Oil Pressure Relief Valve: 15 N·m (1.5 kgf·m, 11 ft·lb)

Oil Pressure Relief Valve Inspection

- Remove the oil pressure relief valve (see Oil Pressure Relief Valve Removal).
- Check to see if the valve [A] slides smoothly when pushing it in with a wooden or other soft rod, and see if it comes back to its seat by spring [B] pressure.

NOTE

○*Inspect the valve in its assembled state. Disassembly and assembly may change the valve performance.*

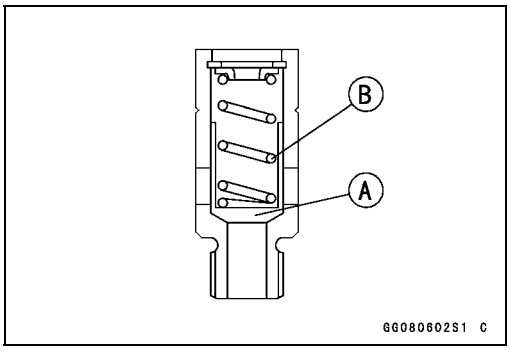

★If any rough spots are found during above inspection, wash the valve clean with a high flash-point solvent and blow out any foreign particles that may be in the valve with compressed air.

⚠ WARNING
Gasoline and low flash-point solvents can be flammable and/or explosive and cause severe burns. Clean the oil pressure relief valve in a well-ventilated area, and take care that there are no sparks or flame anywhere near the working area; this includes any appliance with a pilot light. Do not use gasoline or a low flash-point solvent to clean the oil pressure relief valve.

★If cleaning does not solve the problem, replace the oil pressure relief valve as an assembly. The oil pressure relief valve is precision made with no allowance for replacement of individual parts.

Oil Pump

Oil Pump (Scavenge) Removal

- Remove:
  Flywheel (see Flywheel Removal in the Electrical System chapter)
  Oil Pump (Scavenge) Cover Bolts [A]
  Lower Camshaft Chain Guide [B]
  Oil Pump Cover [C]

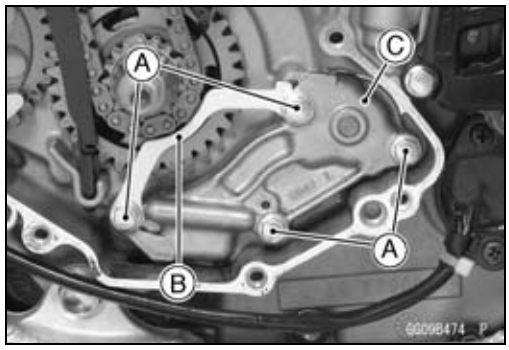

- Remove:
  Oil Pump Shaft [A] with Inner Rotor [B]
  Outer Rotor [C]

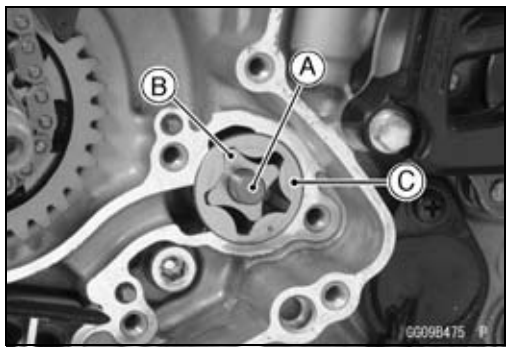

Oil Pump (Scavenge) Installation

- Assemble the following parts as shown in the figure.
  Oil Pump Shaft [A]
  Pin [B]
  Inner Rotor [C]

○Fit the pin into the groove of the inner rotor.

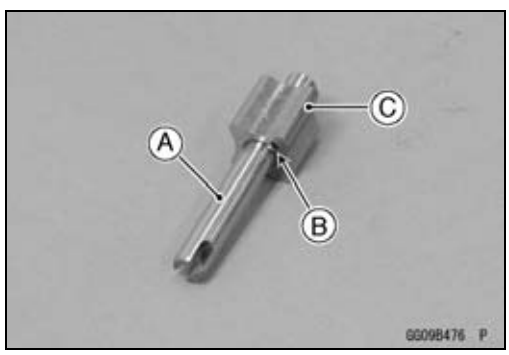

- Install the dowel pins [A] to the crankcase.
- Apply engine oil to the each oil pump rotor and sliding surface of the oil pump shaft.
- Install:
  Outer Rotor [B]
  Inner Rotor Assy [C]

○Turn the oil pump shaft so that the slot in its shaft fits onto the projection of the oil pump driven gear shaft.

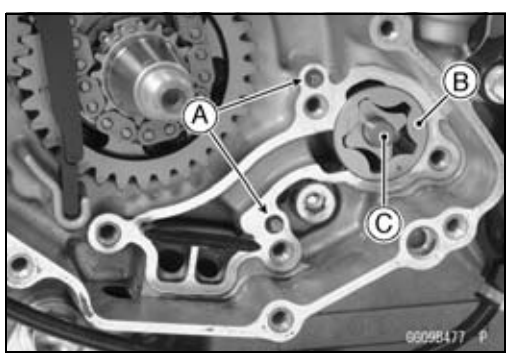

- Install:
  Oil Pump Cover [A]
  Lower Camshaft Chain Guide [B]
- Tighten:

Torque - Oil Pump (Scavenge) Cover Bolts [C]: 9.8 N·m (1.0 kgf·m, 87 in·lb)

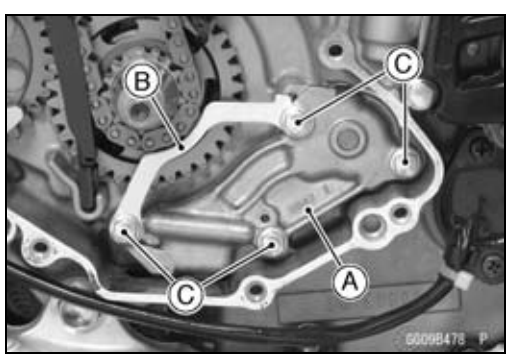

Oil Pump

Oil Pump (Feed) Removal

- Remove:
  Right Engine Cover (see Right Engine Cover Removal in the Clutch chapter)
  Clutch (see Clutch Removal in the Clutch chapter)
  Circlip [A]
  Oil Pump Driven Gear [B]
  Shaft [C]
  Oil Pump Idle Gear [D]

Special Tool - Outside Circlip Pliers: 57001-144

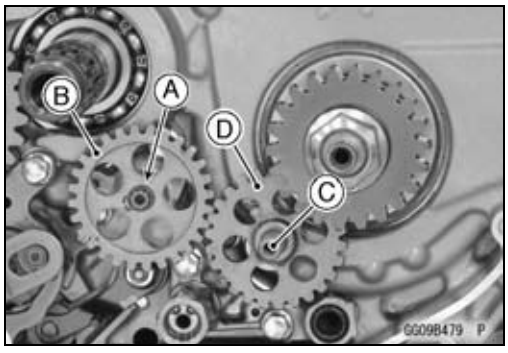

- Remove:
  Oil Pump (Feed) Cover Bolts [A]
  Oil Pump Cover [B]

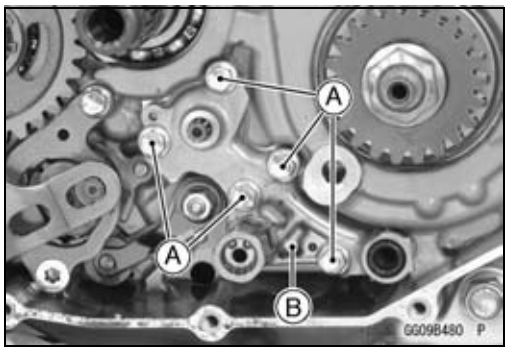

- Remove:
  Inner Rotor Assy [A]
  Outer Rotor [B]

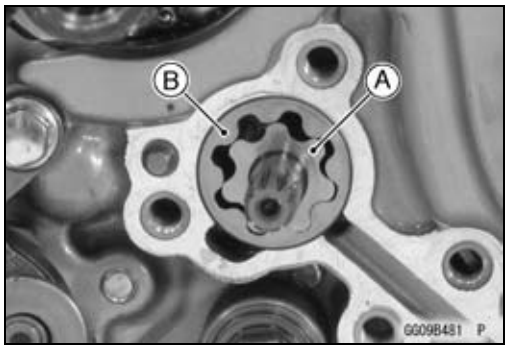

Oil Pump (Feed) Installation

- Install the dowel pins [A] to the crankcase.
- Apply engine oil to the each oil pump rotor and sliding surface of the oil pump driven gear shaft.
- Install:
  Outer Rotor [B]
  Inner Rotor Assy [C]

○Turn the oil pump driven gear shaft [D] so that the projection in its shaft fits onto the slot of the oil pump shaft.

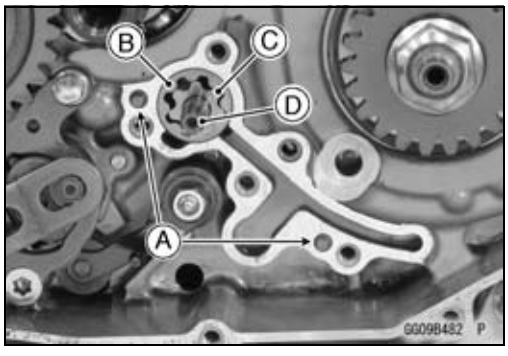

- Install the oil pump cover [A], and tighten the oil pump (feed) cover bolts.
  L = 20 mm (0.8 in.) [B]
  L = 16 mm (0.6 in.) [C]

Torque - Oil Pump (Feed) Cover Bolts: 9.8 N·m (1.0 kgf·m, 87 in·lb)

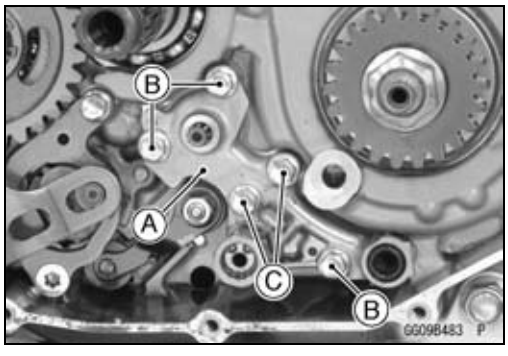

Oil Pump

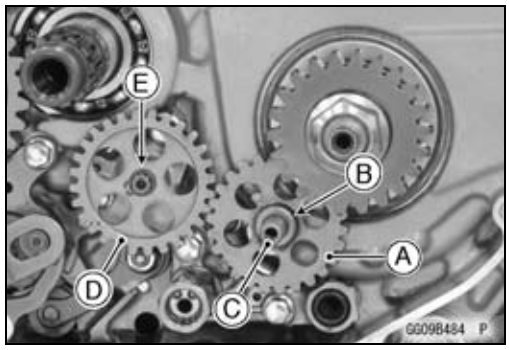

- Apply molybdenum disulfide grease to the shaft of the oil pump idle gear.
- Install the oil pump idle gear [A] facing the stepped side [B] to the outside.
- Install the shaft [C] and oil pump driven gear [D].
- Turn the oil pump driven gear to check that the oil pump operates smoothly.
- Replace the circlip [E] with a new one.
- Install the new circlip.

Special Tool - Outside Circlip Pliers: 57001-144

- Install the removed parts (see appropriate chapters).

Oil Pump Inspection

- Remove each oil pump (see Oil Pump (Scavenge) (Feed) Removal).
- Visually inspect the oil pump body, outer rotors and the inner rotors.

★If the oil pump is any damaged or unevenly worn, replace the rotors, cover, or crankcase.

Oil Pressure

Oil Pressure Measurement

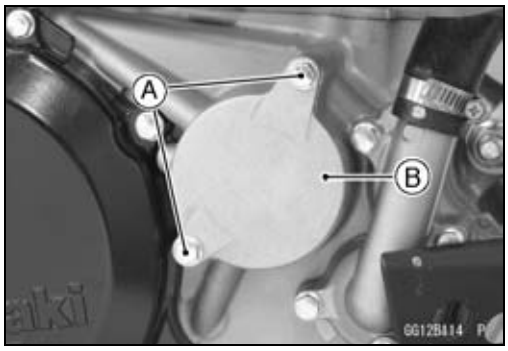

- Remove:
  Oil Filter Cap Bolts [A]
  Oil Filter Cap [B]

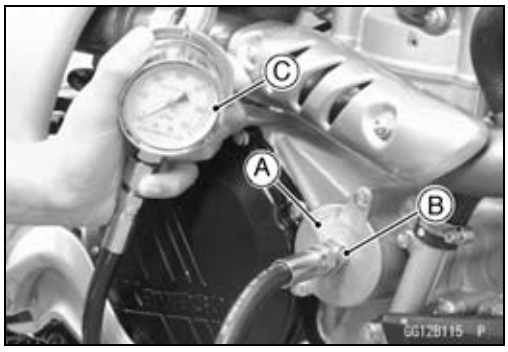

- Install the O-rings of the oil filter cap to the oil pressure cap [A].

  Special Tool - Oil Pressure Cap: 57001-1656
- Install the oil pressure cap, and tighten the oil filter cap bolts.

  Torque - Oil Filter Cap Bolts: 9.8 N·m (1.0 kgf·m, 87 in·lb)
- Attach the oil pressure gauge adapter [B] and oil pressure gauge [C].

  Special Tools - Oil Pressure Gauge, 5 kgf/cm²: 57001-125
  Oil Pressure Gauge Adapter, M10 × 1.25: 57001-1182
- Start the engine.

NOTE

○*Warm up the engine thoroughly before measuring the oil pressure.*

- Run the engine at the specified speed, and read the oil pressure gauge.

  Oil Pressure
  Standard: 20 ~ 70 kPa (0.20 ~ 0.71 kgf/cm², 2.9 ~ 10 psi) at 4 000 r/min (rpm), Oil Temperature 40°C (104°F)

★If the oil pressure is much lower than the standard, check the oil pump (feed).
★If the reading is much higher than the standard, check the oil filter first, and oil passages for dirt or clogging.

⚠ WARNING

Hot oil can cause severe burns. Beware of hot engine oil that will drain through the oil passage when the gauge adapter is removed.

- Stop the engine and remove the oil pressure cap, oil pressure gauge adapter and gauge.
- Replace the O-rings with new ones.
- Apply grease to the O-rings, and install the O-rings to the oil filter cap.
- Install the oil filter cap.
- Tighten:

  Torque - Oil Filter Cap Bolts: 9.8 N·m (1.0 kgf·m, 87 in·lb)

Engine Removal/Installation

Table of Contents

Exploded View 8-2
Special Tools 8-4
Engine Removal/Installation 8-5
Engine Removal 8-5
Engine Installation 8-7

Exploded View

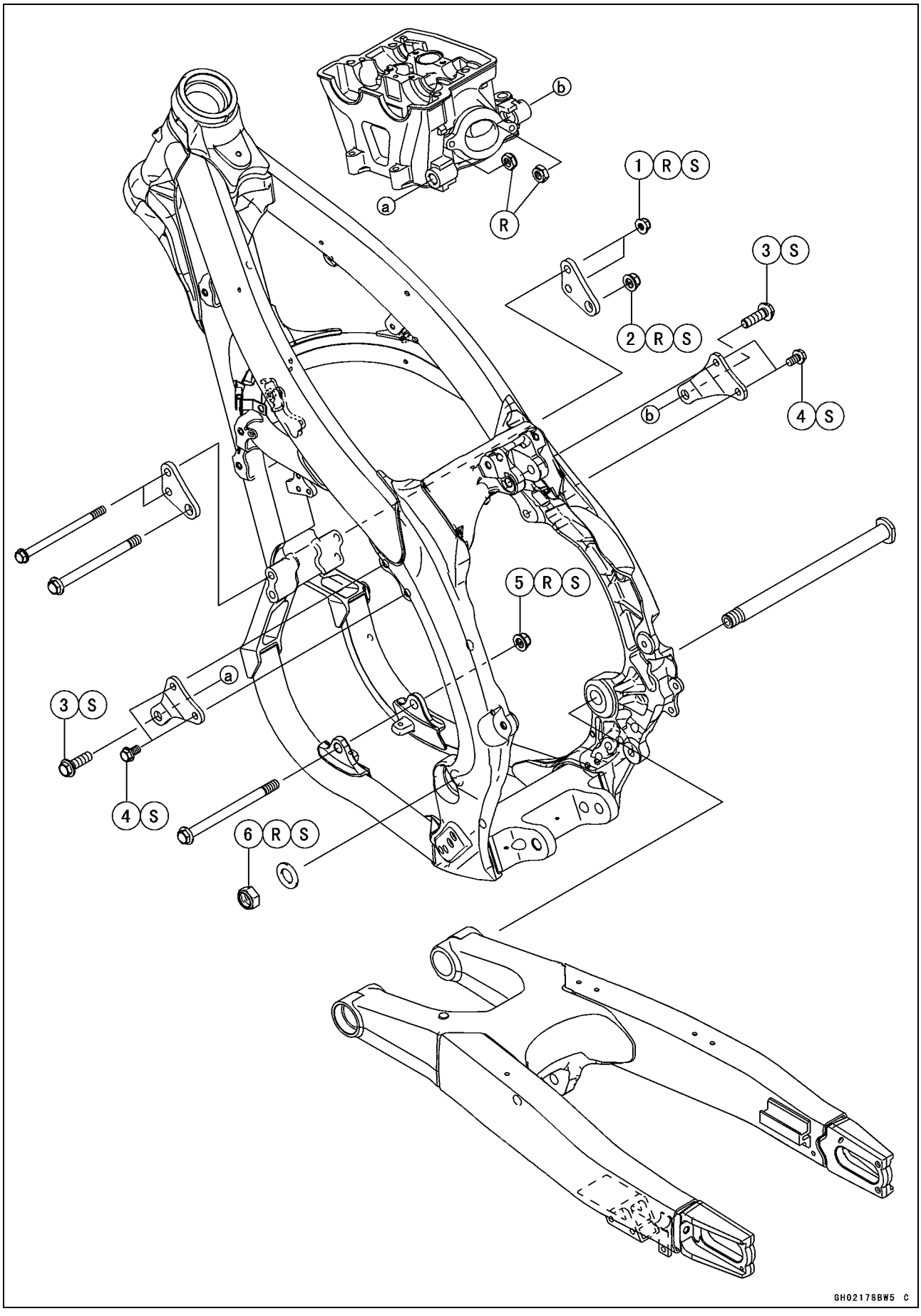

Exploded View

No.	Fastener	Torque			Remarks
		N·m	kgf·m	ft·lb	
1	Middle Engine Bracket Nuts	29	3.0	21	R, S
2	Middle Engine Mounting Nut	49	5.0	36	R, S
3	Upper Engine Mounting Bolts	49	5.0	36	S
4	Upper Engine Bracket Bolts	29	3.0	21	S
5	Lower Engine Mounting Nut	49	5.0	36	R, S
6	Swingarm Pivot Shaft Nut	98	10	72	R, S

R: Replacement Parts
S: Follow the specified tightening sequence.

Special Tools

Jack:
57001-1238

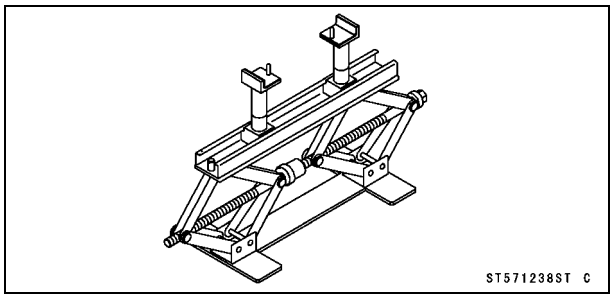

Jack Attachment:
57001-1608

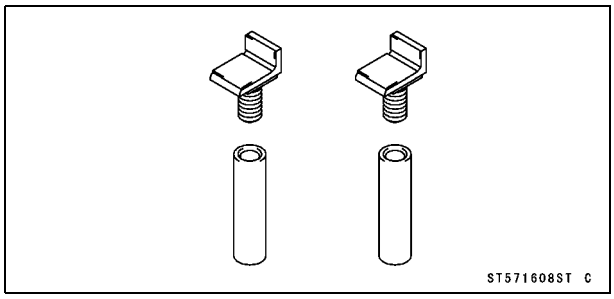

Engine Removal/Installation

Engine Removal

- Place the jack under the frame to support the motorcycle.

Special Tools - Jack: 57001-1238
Jack Attachment: 57001-1608

⚠ WARNING

When the swingarm pivot shaft is removed the swingarm and rear wheel assembly will become detached and allow the frame to fall to the floor, creating the potential for injury. Removing the engine requires the swingarm pivot to be removed, so support the bottom of the frame with a jack or other appropriate stand.

- Squeeze the brake lever slowly and hold it with a band [A].

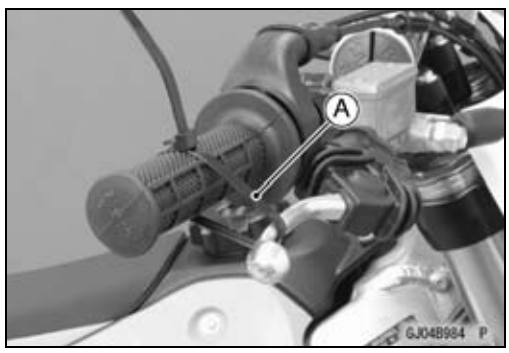

⚠ WARNING

Motorcycle may fall over unexpectedly resulting in an accident or injury. Be sure to hold the front brake when removing the engine.

NOTICE

Be sure to hold the front brake when removing the engine, or the motorcycle may fall over. The engine or the motorcycle could be damaged.

- Drain:
  Engine Oil (see Engine Oil Change in the Periodic Maintenance chapter)
  Coolant (see Coolant Draining in the Cooling System chapter)

- Remove:
  Rear Frame (see Rear Frame Removal in the Frame chapter)
  Exhaust Pipe (see Exhaust Pipe Removal in the Engine Top End chapter)
  Fuel Tank (see Fuel Tank Removal in the Fuel System (DFI) chapter)
  Throttle Body Assy (see Throttle Body Assy Removal in the Fuel System (DFI) chapter)
  Ignition Coil (see Ignition Coil Removal in the Electrical System chapter)
  Shift Pedal (see External Shift Mechanism Removal in the Crankshaft/Transmission chapter)
  Engine Sprocket (see Engine Sprocket Removal in the Final Drive chapter)
  Right Engine Guard (see Right Engine Cover Removal in the Clutch chapter)
  Clutch Cable Lower End (see Clutch Cable Removal in the Clutch chapter)
  Rear Master Cylinder Mounting Bolts (see Rear Master Cylinder Removal in the Brakes chapter)
  Brake Pedal Bolt and Return Spring (see Brake Pedal Removal in the Brakes chapter)

Engine Removal/Installation

● Disconnect:
Water Temperature Sensor Connector (see Water Temperature Sensor Removal/Installation in the Fuel System (DFI) chapter)
Gear Position Switch Lead Connector [A]
Magneto Lead Connector [B]

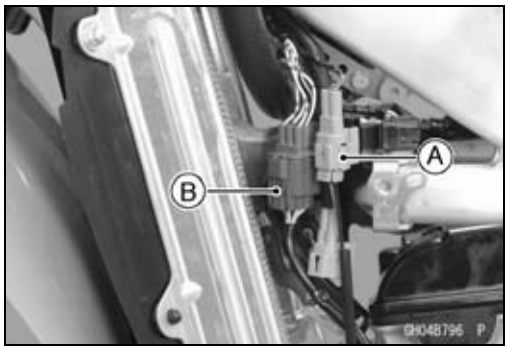

● Remove:
Water Hoses [A]

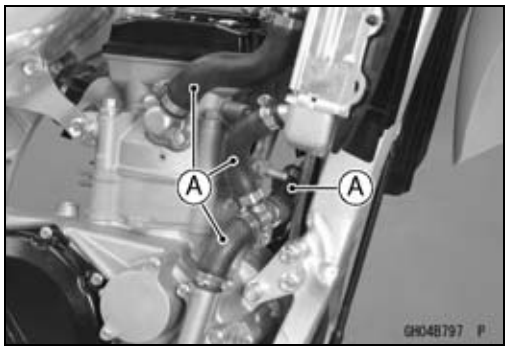

● Remove the following parts on both sides:
Upper Engine Mounting Bolt [A] and Nut
Upper Engine Bracket Bolts [B]
Upper Engine Bracket [C]

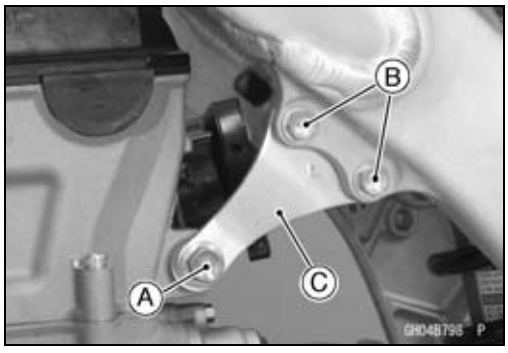

● Remove:
Middle Engine Bracket Bolts [A] and Nuts
Middle Engine Mounting Bolt [B] and Nut
Middle Engine Bracket [C] (Both Sides)
Lower Engine Mounting Bolt [D] and Nut

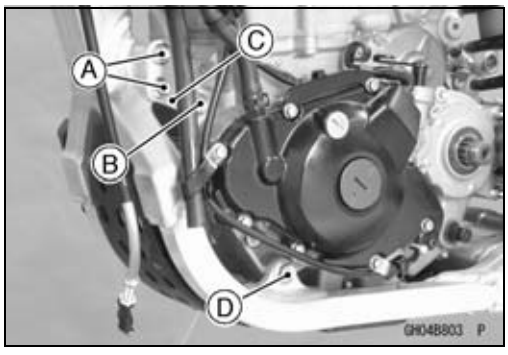

● Remove:
Swingarm Pivot Shaft Nut [A] and Washer
Swingarm Pivot Shaft

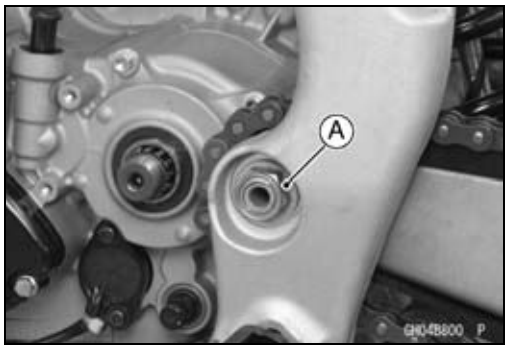

● Remove the engine from the motorcycle to right side.
○Clear the engine rear portion from the swingarm and then remove the engine.

Engine Removal/Installation

Engine Installation

- Replace with new ones:
  Upper Engine Mounting Nuts
  Middle Engine Mounting Nut
  Middle Engine Bracket Nuts
  Lower Engine Mounting Nut
  Swingarm Pivot Shaft Nut
- Install the engine.

○First, insert the front portion of the engine from the right side, and then install the rear portion.
○Second, fit the rear portion of the engine to the swingarm.

- Insert the swingarm pivot shaft from the right side.
- Install all engine brackets, bolts and nuts temporarily.

○Insert the following bolts from left side:
  Middle Engine Mounting Bolt [A]
  Middle Engine Bracket Bolts [B]
  Lower Engine Mounting Bolt [C]

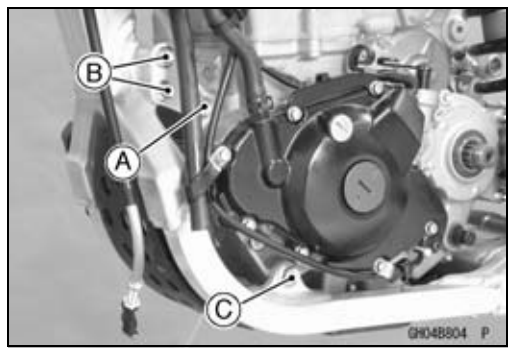

- Install the swingarm pivot shaft nut with the washer.
- Tighten the bolts and nuts in the numbered sequence [1 ~ 6].

Torque - Swingarm Pivot Shaft Nut [1]: 98 N·m (10 kgf·m, 72 ft·lb)
Lower Engine Mounting Nut [2]: 49 N·m (5.0 kgf·m, 36 ft·lb)
Middle Engine Mounting Nut [3]: 49 N·m (5.0 kgf·m, 36 ft·lb)
Middle Engine Bracket Nuts [4]: 29 N·m (3.0 kgf·m, 21 ft·lb)
Upper Engine Bracket Bolts [5]: 29 N·m (3.0 kgf·m, 21 ft·lb)
Upper Engine Mounting Bolts [6]: 49 N·m (5.0 kgf·m, 36 ft·lb)

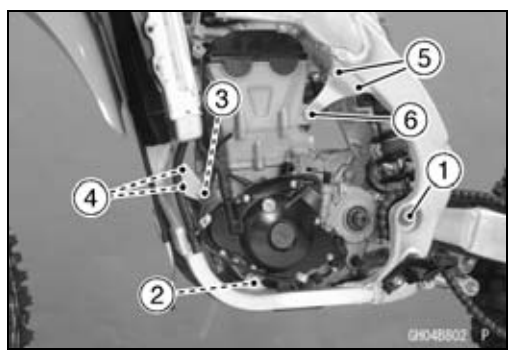

Engine Removal/Installation

- Install the removed parts (see appropriate chapters).
- Run the cables, hoses, and leads according to the Cable, Wire and Hose Routing section in the Appendix chapter.
- Pour:
  Engine Oil (see Engine Oil Change in the Periodic Maintenance chapter)
  Coolant (see Coolant Filling in the Cooling System chapter)
- Adjust:
  Throttle Cables (see Throttle Grip (Throttle Cable) Free Play Adjustment in the Periodic Maintenance chapter)
  Clutch Cable (see Clutch Operation Inspection in the Periodic Maintenance chapter)
  Drive Chain (see Drive Chain Slack Adjustment in the Periodic Maintenance chapter)
  Idle Speed (see Idle Speed Adjustment in the Periodic Maintenance chapter)
- Check the brake effectiveness.

⚠ WARNING

After servicing, it takes several applications of the brake lever before the brake pads contact the disc, which could result in increased stopping distance and cause an accident resulting in injury or death. Do not attempt to ride the motorcycle until a firm brake lever is obtained by pumping the lever until the pads are against the disc.

Crankshaft/Transmission

Table of Contents

Exploded View 9-2
Specifications 9-6
Special Tools and Sealant 9-7
Crankcase 9-8
  Crankcase Disassembly 9-8
  Crankcase Assembly 9-10
Crankshaft 9-17
  Crankshaft Removal 9-17
  Crankshaft Installation 9-17
  Crankshaft Disassembly 9-17
  Crankshaft Assembly 9-17
  Crankshaft Inspection 9-18
  Connecting Rod Bend Inspection 9-19
  Connecting Rod Twist Inspection 9-20
Transmission 9-21
  Transmission Shaft Removal 9-21
  Transmission Shaft Installation 9-21
  Transmission Shaft Disassembly 9-21
  Transmission Shaft Assembly 9-22
  Shift Fork Bending Inspection 9-24
  Shift Fork/Gear Groove Wear Inspection 9-24
  Shift Fork Guide Pin/Shift Drum Groove Wear Inspection 9-24
  Gear Damage Inspection 9-24
Balancer 9-25
  Balancer Removal 9-25
  Balancer Installation 9-25
Primary Gear 9-26
  Primary Gear Removal 9-26
  Primary Gear Installation 9-26
External Shift Mechanism 9-27
  Shift Pedal Removal 9-27
  Shift Pedal Installation 9-27
  External Shift Mechanism Removal 9-27
  External Shift Mechanism Installation 9-28
  External Shift Mechanism Inspection 9-29
Kickstarter 9-30
  Kick Pedal Assy Removal 9-30
  Kick Pedal Assy Installation 9-30
  Kick Pedal Assy Disassembly 9-30
  Kick Pedal Assy Assembly 9-30
  Idle Gear Removal 9-31
  Idle Gear Installation 9-31
  Kickshaft Removal 9-31
  Kickshaft Installation 9-32
  Kick Shaft Assembly Disassembly/Assembly 9-32
Bearings/Oil Seals 9-34
  Bearing Replacement 9-34
  Bearing Wear Inspection 9-34
  Oil Seal Inspection 9-35

Exploded View

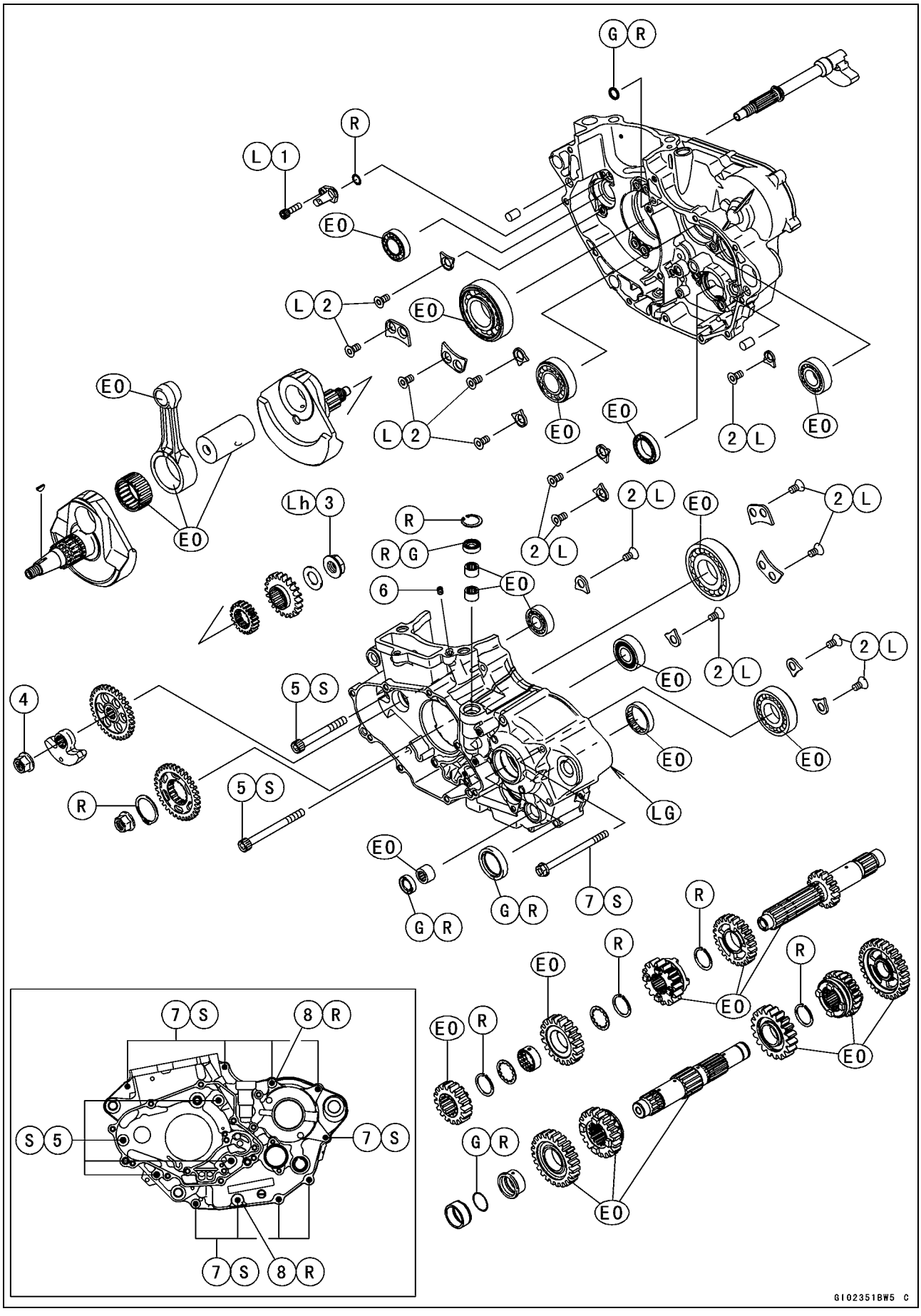

Exploded View

No.	Fastener	Torque			Remarks
		N·m	kgf·m	ft·lb	
1	Piston Oil Nozzle Bolt	7.0	0.71	62 in·lb	L
2	Crankcase Bearing Retainer Screws	15	1.5	11	L
3	Primary Gear Nut	98	10	72	Lh
4	Balancer Weight Mounting Nut	52	5.3	38	
5	Crankcase Bolts (M7)	15	1.5	11	S
6	Piston Oil Nozzle	3.0	0.31	27 in·lb	
7	Crankcase Bolts (M6)	12	1.2	106 in·lb	S

8. Washers
EO: Apply engine oil.
G: Apply grease.
L: Apply a non-permanent locking agent.
Lh: Left-hand Threads
LG: Apply liquid gasket.
R: Replacement Parts
S: Follow the specified tightening sequence.

Exploded View

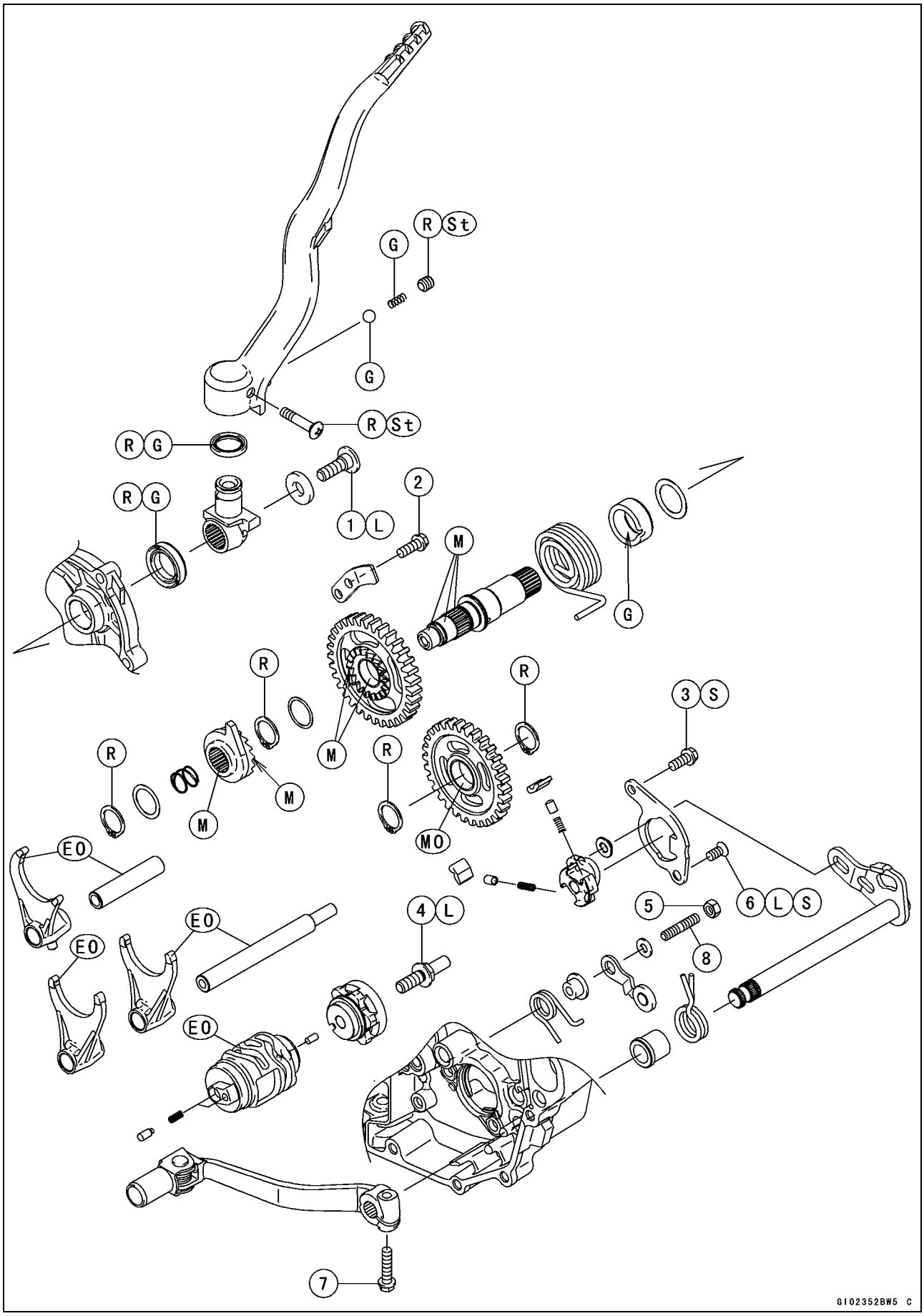

Exploded View

No.	Fastener	Torque			Remarks
		N·m	kgf·m	ft·lb	
1	Kick Pedal Bolt	25	2.5	18	L
2	Ratchet Guide Bolt	8.8	0.90	78 in·lb	
3	Ratchet Plate Bolt	9.8	1.0	87 in·lb	S
4	Shift Drum Cam Bolt	24	2.4	18	L
5	Gear Positioning Lever Nut	8.8	0.90	78 in·lb	
6	Ratchet Plate Screw	15	1.5	11	L, S
7	Shift Pedal Bolt	9.8	1.0	87 in·lb	

8. Face the round end outword.
EO: Apply engine oil.
G: Apply grease.
L: Apply a non-permanent locking agent.
M: Apply molybdenum disulfide grease.
MO: Apply molybdenum disulfide oil solution.
(mixture of the engine oil and molybdenum disulfide grease in a weight ratio 10:1)
R: Replacement Parts
S: Follow the specified tightening sequence.
St: Stake the fasteners to prevent loosening.

Specifications

Item	Standard	Service Limit
Crankshaft, Connection Rod		
Connecting Rod Big End:		
Radial Clearance	0.002 ~ 0.014 mm (0.00008 ~ 0.00055 in.)	0.06 mm (0.0024 in.)
Side Clearance	0.25 ~ 0.35 mm (0.0098 ~ 0.0138 in.)	0.6 mm (0.02 in.)
Crankshaft Runout	TIR 0.03 mm (0.001 in.) or less	TIR 0.08 mm (0.003 in.)
Connecting Rod Bend	– – –	TIR 0.2 mm (0.008 in.)/100 mm (3.94 in.)
Connecting Rod Twist	– – –	TIR 0.2 mm (0.008 in.)/100 mm (3.94 in.)
Transmission		
Shift Fork Ear Thickness	4.9 ~ 5.0 mm (0.193 ~ 0.197 in.)	4.8 mm (0.189 in.)
Gear Groove Width	5.05 ~ 5.15 mm (0.199 ~ 0.203 in.)	5.3 mm (0.209 in.)
Shift Fork Guide Pin Diameter	5.9 ~ 6.0 mm (0.232 ~ 0.236 in.)	5.8 mm (0.228 in.)
Shift Drum Groove Width	6.05 ~ 6.20 mm (0.238 ~ 0.244 in.)	6.3 mm (0.248 in.)

Special Tools and Sealant

Inside Circlip Pliers:
57001-143

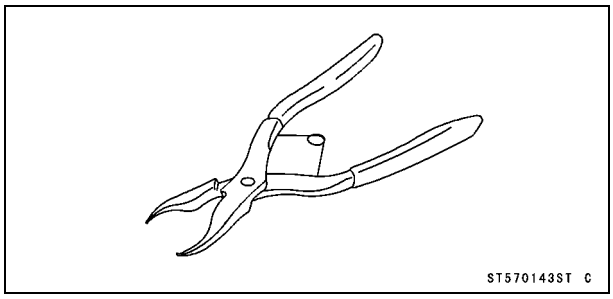

Outside Circlip Pliers:
57001-144

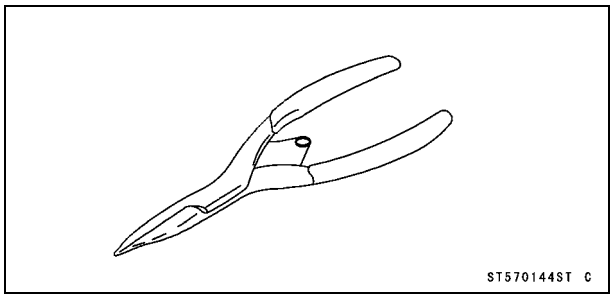

Bearing Driver Set:
57001-1129

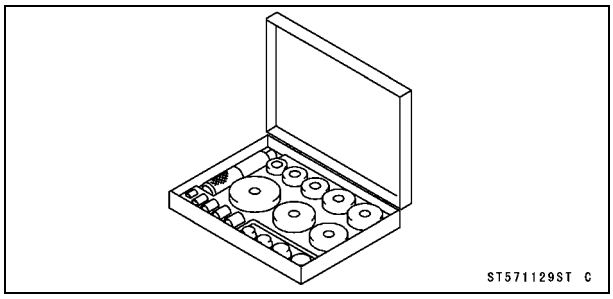

Crankshaft Jig:
57001-1174

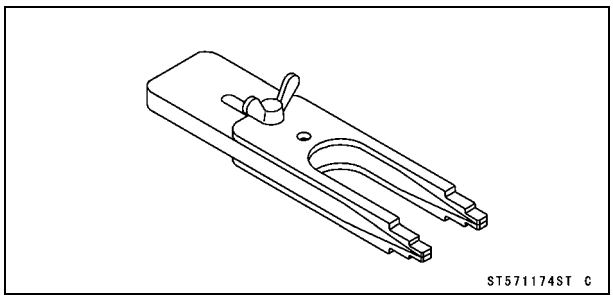

Crankcase Splitting Tool Assembly:
57001-1362

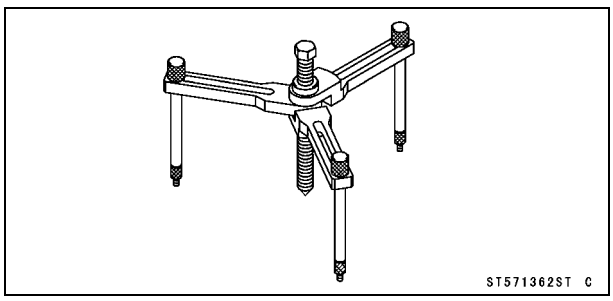

Gear Holder, m2.0:
57001-1557

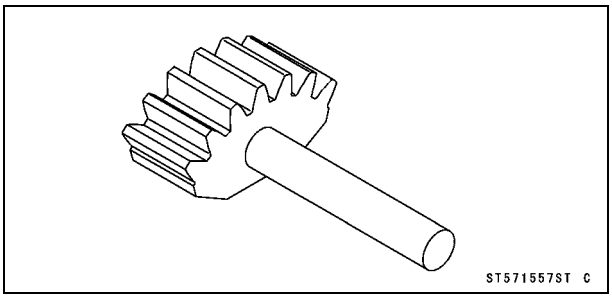

Grip:
57001-1591

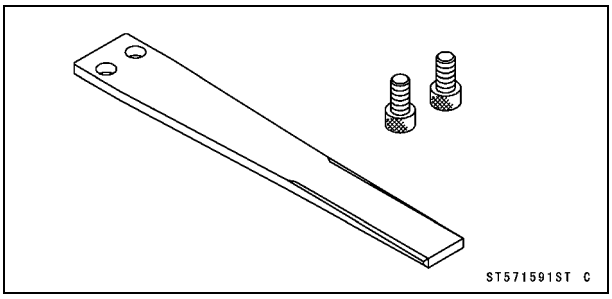

Rotor Holder:
57001-1730

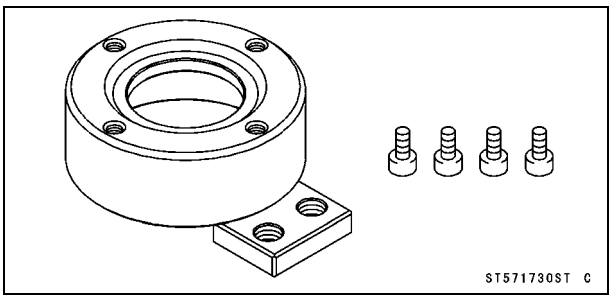

Liquid Gasket, TB1216:
92104-1063

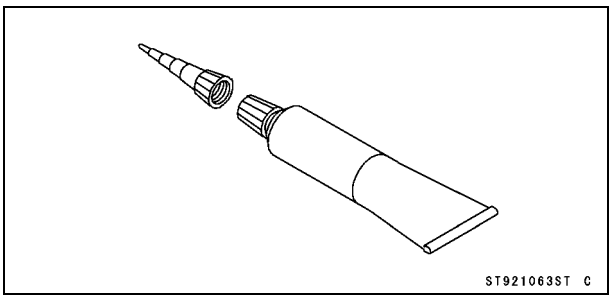

Crankcase

Crankcase Disassembly

- Remove the engine from the frame (see Engine Removal in the Engine Removal/Installation chapter).
- Set the engine on clean surface while parts are being removed.
- Remove:
  Piston (see Piston Removal in the Engine Top End chapter)
  Right Engine Cover (see Right Engine Cover Removal in the Clutch chapter)
  Clutch (see Clutch Removal in the Clutch chapter)
  Primary Gear (see Primary Gear Removal)
  Balancer (see Balancer Removal)
  Oil Pumps (see Oil Pump (Scavenge) (Feed) Removal in the Engine Lubrication System chapter)
  Kick Shaft Assembly (see Kick Shaft Removal)
  Kick Shaft Idle Gear (see Idle Gear Removal)
  External Shift Mechanism (see External Shift Mechanism Removal)
  Flywheel (see Flywheel Removal in the Electrical System chapter)
  Gear Position Switch (see Gear Position Switch Removal in the Fuel System (DFI) chapter)

- Remove the output shaft collar [A] and the O-ring [B].

○Do not reuse the O-ring.

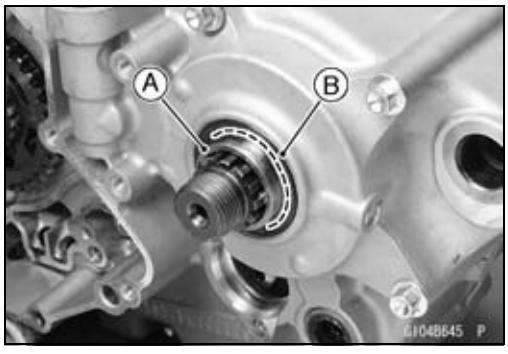

- Remove:
  Circlip [A]

  Special Tool - Outside Circlip Pliers: 57001-144

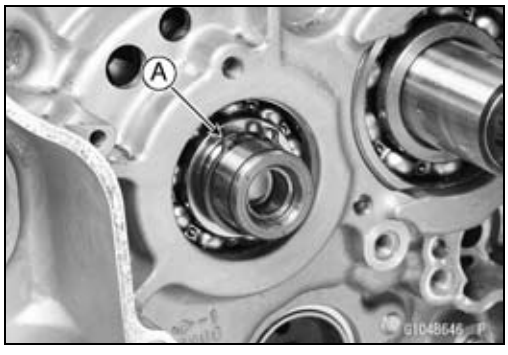

Crankcase

- Remove:
  Circlip [A]
  Balancer Drive Gear [B]

  Special Tool - Outside Circlip Pliers: 57001-144

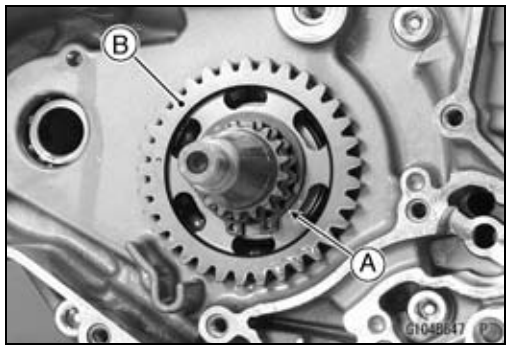

- Remove the crankcase bolts [A].

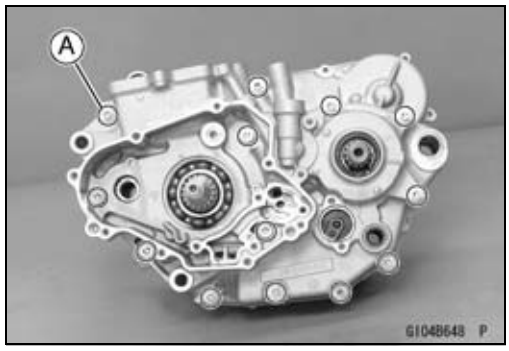

- Insert a suitable tool to the pry point [A], and split the crankcase.

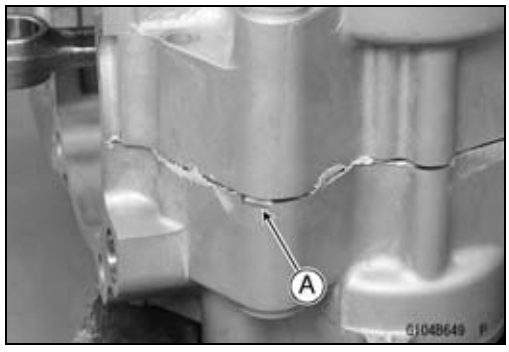

★If the crankcase cannot be split easily, split the crankcase according to the following procedures.

○Install the jig [A] between the crankshaft flywheels.

Special Tool - Crankshaft Jig: 57001-1174

○Attach the crankcase splitting tool [B] to the left crankcase half.

Special Tool - Crankcase Splitting Tool Assembly: 57001 -1362

○Tighten the center bolt of the crankcase splitting tool to split the crankcase halves.

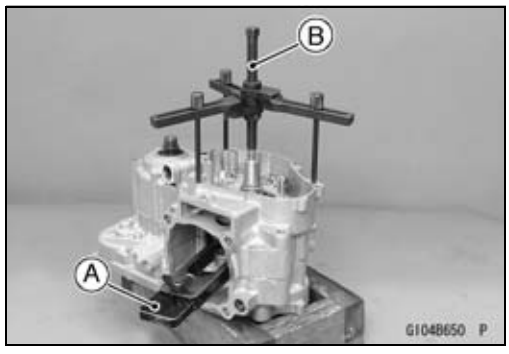

- Remove:
  Oil Screen (Feed) [A] (see Oil Screen (Feed) Removal in the Engine Lubrication System chapter)
  Shift Rods [B] (see Transmission Shaft Removal)
  Shift Forks [C] (see Transmission Shaft Removal)
  Shift Drum [D] (see Transmission Shaft Removal)
  Transmission Shafts [E] (see Transmission Shaft Removal)
  Crankshaft [F] (see Crankshaft Removal)

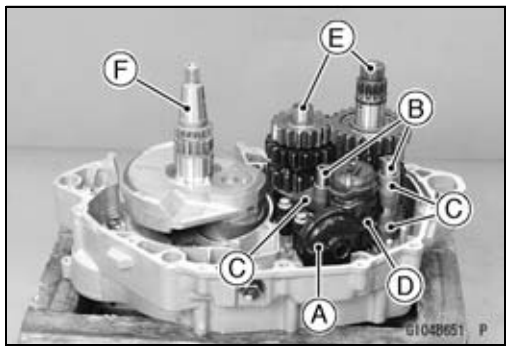

Crankcase

NOTICE

Do not remove the bearings and the oil seals unless it is necessary.
Removal may damage them.

Crankcase Assembly

NOTICE

Right and left crankcase halves are machined at the factory in the assembled state, so if replaced, they must be replaced as a set.

- Remove the old gasket from the mating surfaces of the crankcase halves and clean them off with a high flash -point solvent.
- Using compressed air, blow out the oil passages in the crankcase halves.

⚠ WARNING

Gasoline and low flash-point solvents can be flammable and/or explosive and cause severe burns. Clean the engine parts in a well-ventilated area, and take care that there is no spark or flame anywhere near the working areas. Do not use gasoline or low flash-point solvents to clean parts.

- Support the crankcase bearing boss with a suitable retainer [A].
- Using a press and the bearing driver set [C], install a new bearing [B] until it bottoms out.

Special Tool - Bearing Driver Set: 57001-1129

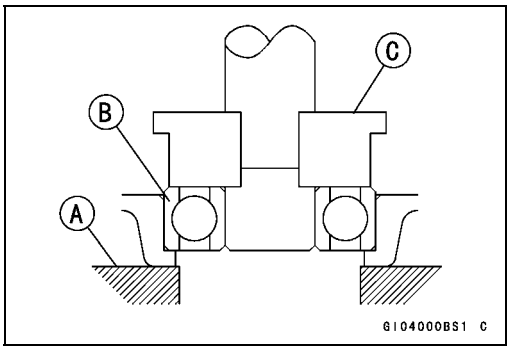

NOTICE

Support the crankcase bearing boss when the bearing is pressed, or the crankcase could be damaged.

- Press the new drive shaft bearing [A] and output shaft bearing [B] in the left crankcase half so that the sealed side [C] faces outside of the engine.

Special Tool - Bearing Driver Set: 57001-1129

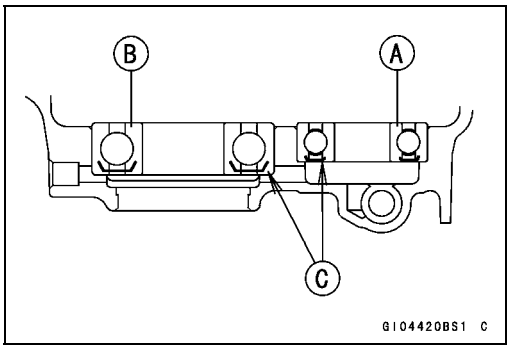

Crankcase

- Press the new drive shaft bearing [A] in the right crankcase half [B] so that the stepped side [C] faces inside of the engine.

  Special Tool - Bearing Driver Set: 57001-1129

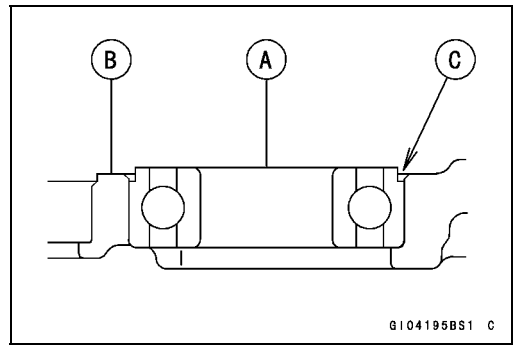

- Press the new crankshaft bearings [A] in the left and right crankcase halves [B] so that the stepped side [C] faces inside of the engine.

  Special Tool - Bearing Driver Set: 57001-1129

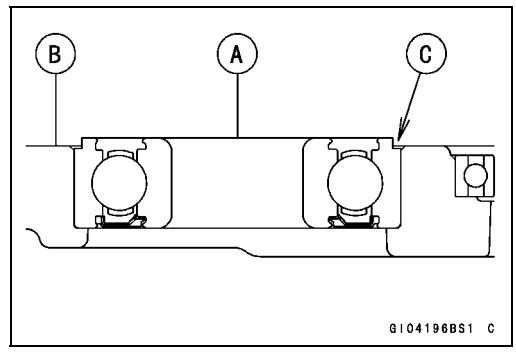

- Press the new shift drum needle bearing [A] and shift shaft needle bearing [B] in the left crankcase half so that bearing surface flush with the crankcase surface [C].

  Special Tool - Bearing Driver Set: 57001-1129

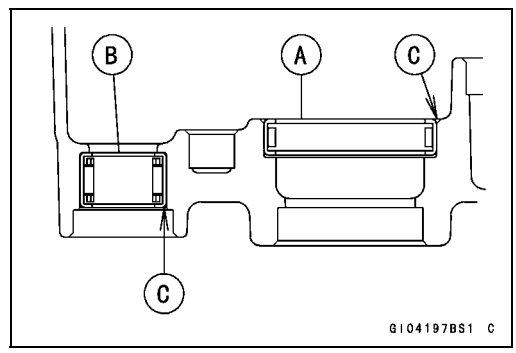

- Press the new shift drum bearing [A] in the right crankcase half so that the sealed side [B] faces inside of the engine.

  Special Tool - Bearing Driver Set: 57001-1129

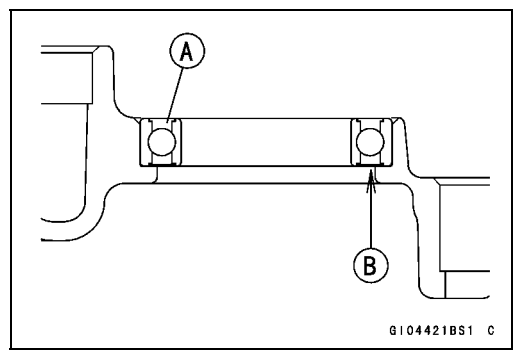

- First, press the new inside release shaft needle bearing [A] until it bottom out with the bearing driver set [B].

  Special Tool - Bearing Driver Set: 57001-1129

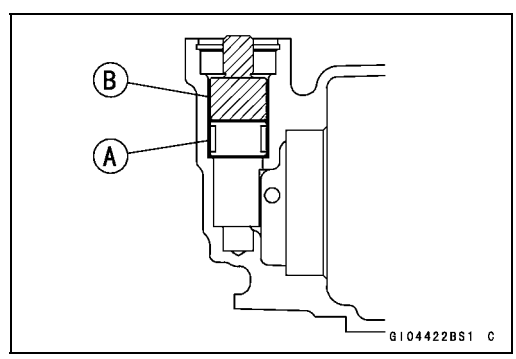

Crankcase

- Next, press the new outside release shaft needle bearing [A] until the surface of the bearing is even with the crankcase surface [B].

  Special Tool - Bearing Driver Set: 57001-1129

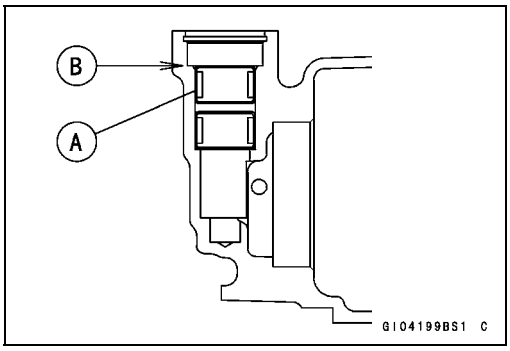

- Replace the oil seals, if removed.
- Press the release shaft oil seal [A] so that the oil seal lip [B] faces to the engine outside, and the oil seal surface is flush with the left crankcase surface [C].

  Special Tool - Bearing Driver Set: 57001-1129

- Apply grease to the oil seal lip.
- Install the new circlip [D].

  Special Tool - Inside Circlip Pliers: 57001-143

- Repeat the same procedures for the output shaft and shift shaft oil seals.

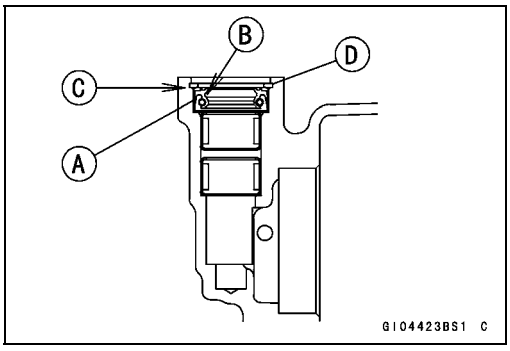

- Install the crankcase bearing retainers so that the chamfered side faces inside of the engine.
- Apply a non-permanent locking agent to the threads of the crankcase bearing retainer screws [A].
- Tighten:

  Torque - Crankcase Bearing Retainer Screws: 15 N·m (1.5 kgf·m, 11 ft·lb)

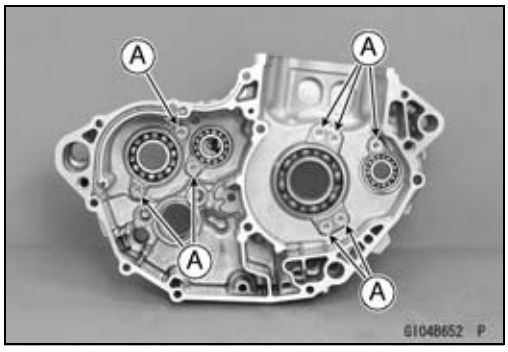

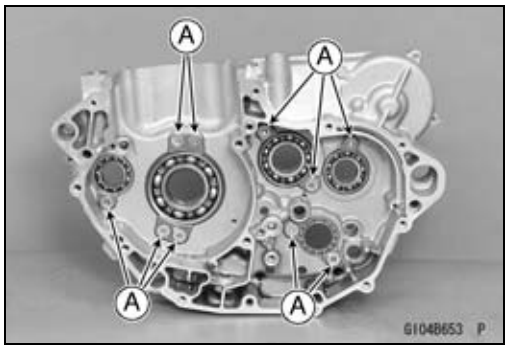

- When installing the piston oil nozzle [A], tighten it securely.

  Torque - Piston Oil Nozzle: 3.0 N·m (0.31 kgf·m, 27 in·lb)

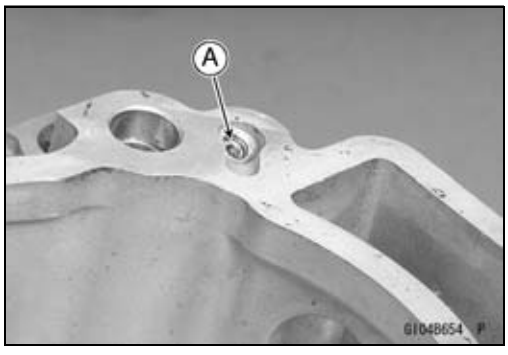

Crankcase

- When installing the piston oil nozzle [A], note the following.

○Replace the O-ring [B] with a new one.
○Install the O-ring to the piston oil nozzle.

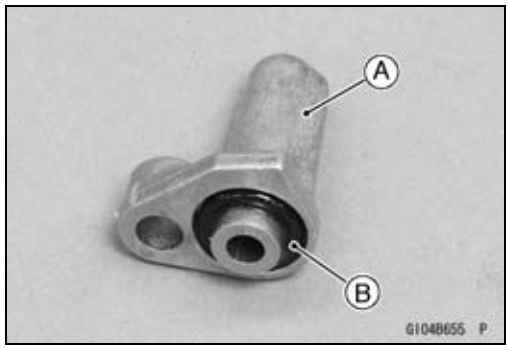

○Apply a non-parmanent locking agent to the threads of the piston oil nozzle bolt [A].
○Tighten:

Torque - Piston Oil Nozzle Bolt: 7.0 N·m (0.71 kgf·m, 62 in·lb)

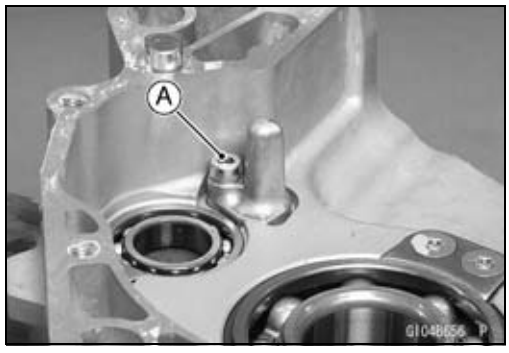

- Install:
  Crankshaft (see Crankshaft Installation)
  Transmission Shafts (see Transmission Shaft Installation)
  Oil Screen (Feed) (see Oil Screen (Feed) Installation in the Engine Lubrication System chapter)

- Replace the O-ring [A] with a new one, and apply grease.
- Install:
  Dowel Pins [B]
  O-ring

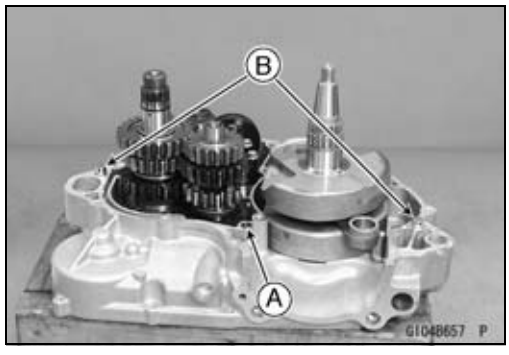

Crankcase

- Using a high flash-point solvent, clean off any oil or dirt that may be on the liquid gasket coating area. Dry them with a clean cloth.
- Apply liquid gasket to the mating surface [A] of the left crankcase half.

Sealant - Liquid Gasket, TB1216: 92104-1063

NOTE

○*Especially, apply liquid gasket so that it shall be filled up on the groove [B].*
○*Make the application finish within 20 minutes when the liquid gasket to the mating surface of the left crankcase half is applied.*
○*Moreover fit the case and tighten the case bolts just after finishing the application of the liquid gasket.*

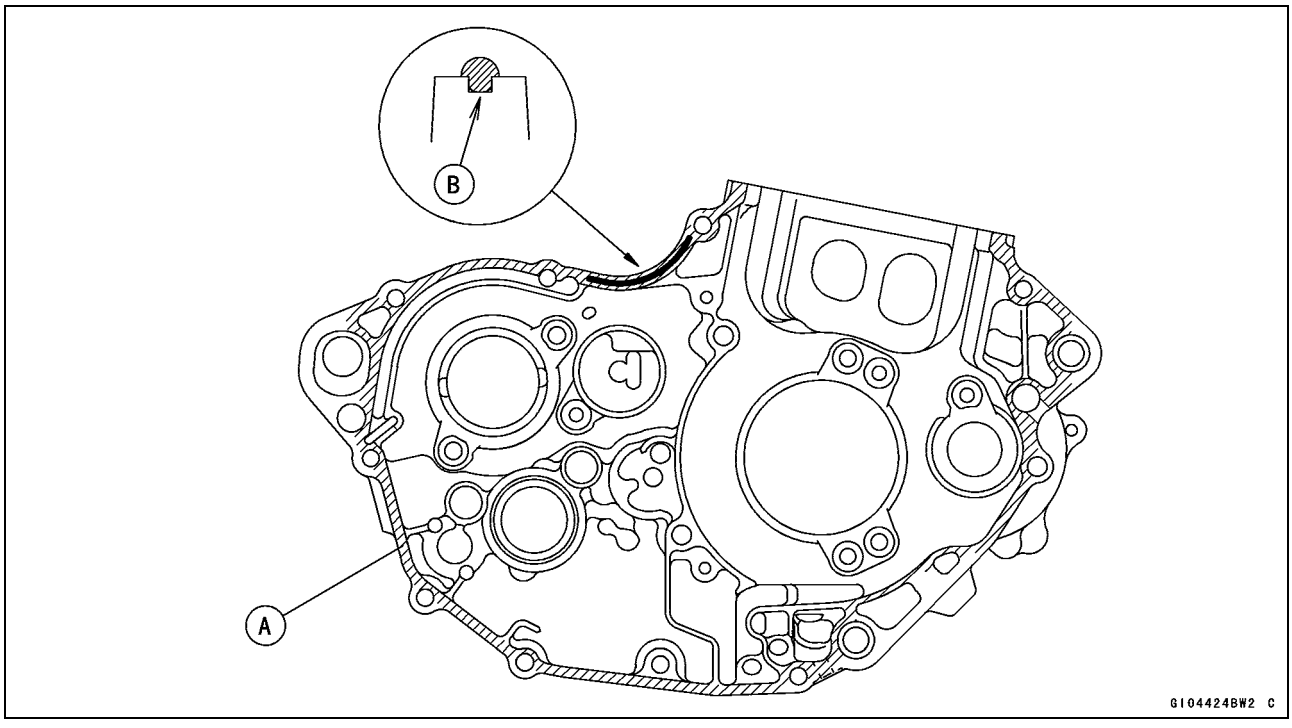

- Using a plastic hammer, press the rear portion of the crankcase, and tap the area around the crankshaft of the left crankcase half. While maintaining the mating surfaces of the right and left crankcase halves constantly parallel, mate the crankcase halves evenly.

○When the left crankcase half can not install easily, position the connecting rod at the bottom-dead-center, and install the crankshaft jig [A] between the crankshaft flywheels.

Special Tool - Crankshaft Jig: 57001-1174

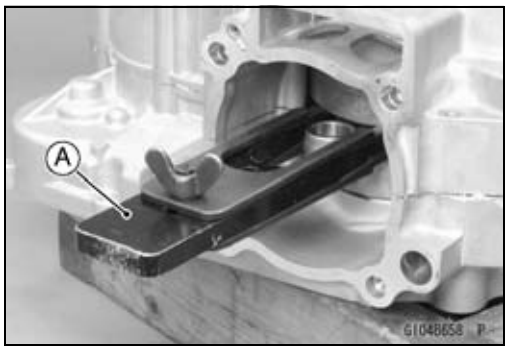

NOTE

○*Constantly check the alignment of the two crankcase halves, and the position of the transmission shafts and shift drum. The front and rear of the crankcase must be pushed together evenly.*

Crankcase

- Replace the washers [A] with a new one.
- Tighten the crankcase bolts, starting with the periphery of the crankshaft, then outward.

Torque - Crankcase Bolts (M6): 12 N·m (1.2 kgf·m, 106 in·lb)
Crankcase Bolts (M7): 15 N·m (1.5 kgf·m, 11 ft·lb)

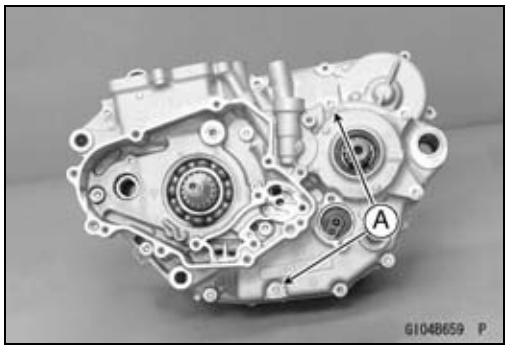

NOTE

○*After tightening the crankcase bolts, wipe up the liquid gasket seeping out around the mating surface, especially around the area.*

- Make sure that the crankshaft, drive shaft, and output shaft rotate smoothy (in the neutral position).

★If the crankshaft will not turn, probably the crankshaft is not centered; install the crankshaft jig at the bottom-dead -center, and tap the appropriate end of the crankshaft with a mallet to reposition it.

Special Tool - Crankshaft Jig: 57001-1174

- Install:
  Gear Positioning Lever (see External Shift Mechanism Installation)
  Shift Drum Cam (see External Shift Mechanism Installation)
- Check to see that gears shift smoothly from 1st to 5th gear, and 5th to 1st while spinning the output shaft.
- Set the shift drum in the neutral position.

- Replace the O-ring [A] on the output shaft with a new one.
- Apply grease to the O-ring.
- Install O-ring on the output shaft while expanding the O -ring.
- Insert the collar [B] with the groove [C] faces inside.

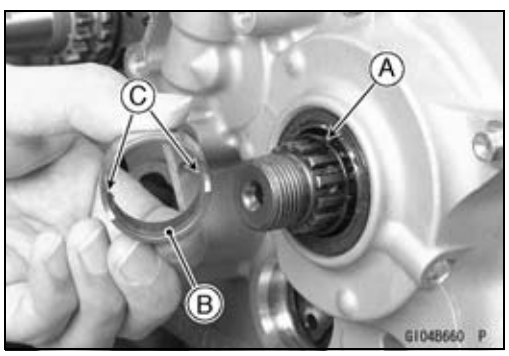

- Install the balancer drive gear [A] to the crankshaft so that the wide groove [B] of the drive gear fits to the wide tooth [C] on the crankshaft.
- Replace the circlip with a new one, and install it.

Special Tool - Outside Circlip Pliers: 57001-144

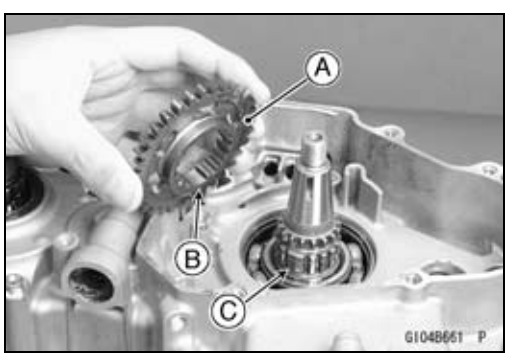

Crankcase

- Replace the circlip [A] with a new one, and install it to the output shaft.

  Special Tool - Outside Circlip Pliers: 57001-144

- Install the removed parts (see appropriate chapters).

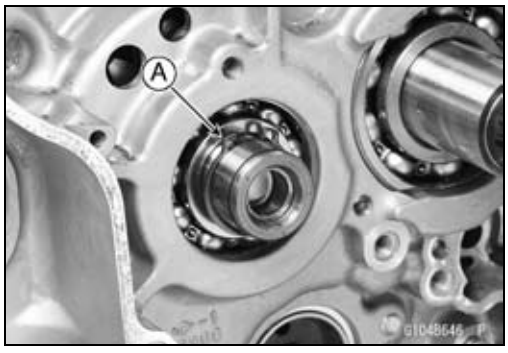

Crankshaft

Crankshaft Removal

- Split the crankcase (see Crankcase Disassembly).
- Remove the crankshaft [A] from the right crankcase half [B].

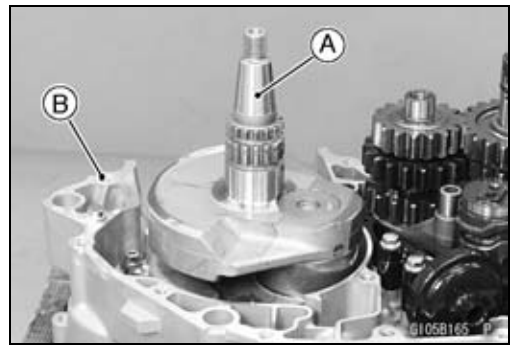

Crankshaft Installation

- Install the crankshaft to the right crankcase half.
- Apply engine oil to the connecting rod big end bearing.

Crankshaft Disassembly

Since assembly of the crankshaft demands exacting tolerances, the disassembly and reassembly of the crankshaft can only be done by a shop having the necessary tools and equipment.

★If it should be necessary to disassemble the crankshaft, use a press to remove the crankpin.

Crankshaft Assembly

Since the assembly of the crankshaft demands exacting tolerances, the disassembly and reassembly of the crankshaft can only be done by a shop having the necessary tools and equipment.

- Reassemble the crankshaft according to the standard tolerances in Specifications.

○Connecting rod bend, twist (see Connecting Rod Bend Inspection, Connecting Rod Twist Inspection)
○Connecting rod big end radial clearance (see Crankshaft Inspection)
○Cold-fitting tolerance between crankpin and flywheels
0.8 ~ 1.2 mm (0.03 ~ 0.05 in.) [A]
64.3 mm (2.53 in.) [B]
○Side clearance between the connecting rod big end and one of flywheels (see Crankshaft Inspection)
○Crankshaft runout (see Crankshaft Inspection)

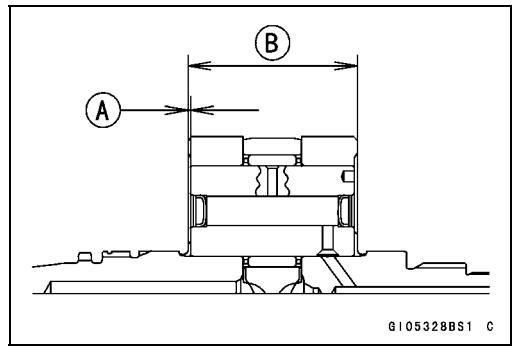

- Carefully align the oil passage hole in the right flywheel [A] with the one in the crankpin [B] at rebuilding of the crankshaft as shown.

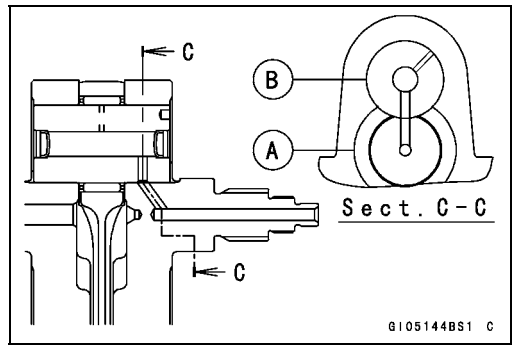

Crankshaft

Crankshaft Inspection

Connecting Rod Big End Radial Clearance Inspection

- Set the crankshaft on V blocks, and place a dial gauge [A] against the connecting rod big end.
- Push [B] the connecting rod first towards the gauge and then in the opposite direction. The difference between two gauge readings is the radial clearance.

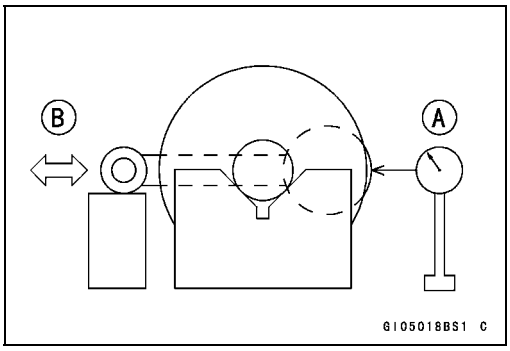

Connecting Rod Big End Radial Clearance

Standard:	**0.002 mm ~ 0.014 mm (0.00008 ~ 0.00055 in.)**
Service Limit:	**0.06 mm (0.0024 in.)**

★If the radial clearance exceeds the service limit, crankshaft should be either replaced or disassembled and crankpin, needle bearing, and connecting rod big end should be examined for wear.

Connecting Rod Big End Side Clearance Inspection

- Refer to the Crankshaft Inspection in the Periodic Maintenance chapter.

Crankshaft Runout Inspection

- Set the crankshaft in a flywheel alignment jig or on V blocks, and place a dial gauge as shown and turn the crankshaft slowly. The maximum difference in gauge reading is the crankshaft runout.
  8.5 mm (0.33 in.) [A]

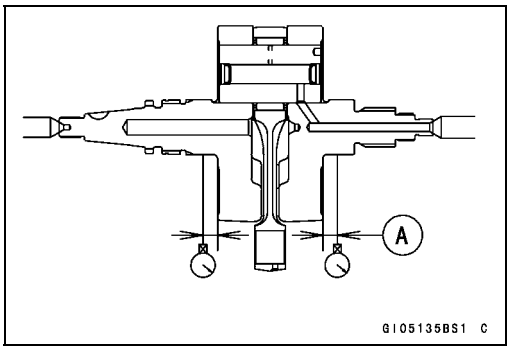

Crankshaft Runout

Standard:	**TIR 0.03 mm (0.001 in.) or less**
Service Limit:	**TIR 0.08 mm (0.003 in.)**

★If the runout at either point exceeds the service limit, replace the crankshaft assembly with a new one or align the crankshaft so that the runout falls within the service limit.

- First correct the horizontal misalignment by striking the projecting crank half [A] with a plastic, soft lead, or brass hammer as shown.
- Recheck the runout with a dial gauge and repeat the process until the runout falls within the service limit.

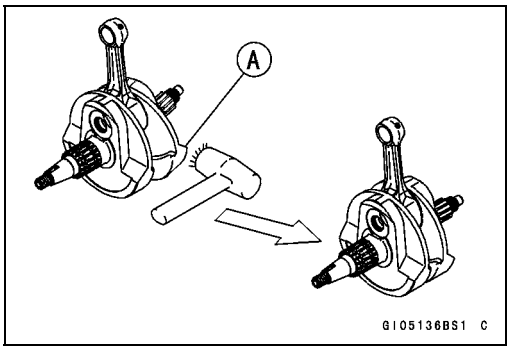

Crankshaft

- Next, correct the vertical misalignment by either driving a wedge [A] in between the crank halves or by squeezing them in a vise, depending on the nature of the misalignment.

NOTICE
Do not hammer the crank half at the point [B].

★If flywheel misalignment cannot be corrected by the above method, replace the crankpin or the crankshaft itself.

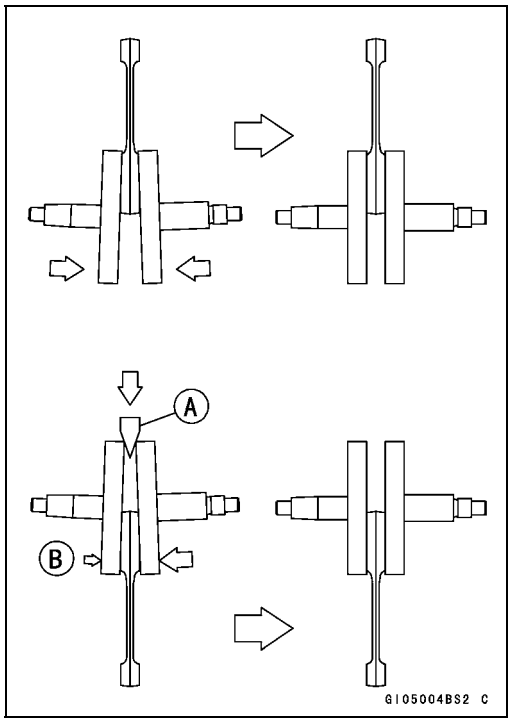

Connecting Rod Big End Seizure Inspection

★In case of serious seizure with damaged flywheels, the crankshaft must be replaced.

★In case of less serious damage, disassemble the crankshaft and replace the crankpin, needle bearing, and connecting rod.

Connecting Rod Bend Inspection

- Remove the connecting rod.
- Select an arbor [A] of the same diameter as the connecting rod big end, and insert the arbor through the connecting rod big end.
- Select an arbor [B] of the same diameter as the piston pin and more than 105 mm (4.13 in.) long, and insert the arbor through the connecting rod small end.
- On a surface plate, set the big-end arbor on a V block [C].
- With the connecting rod held vertically, use a height gauge to measure the difference in the height of the arbor above the surface plate over a 100 mm (3.94 in.) length to determine the amount of connecting rod bend.

★If connecting rod bend exceeds the service limit, the connecting rod must be replaced.

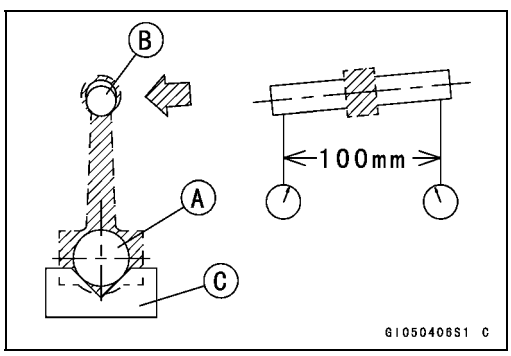

Connecting Rod Bend

Service Limit: TIR 0.2/100 mm (0.008/3.94 in.)

Crankshaft

Connecting Rod Twist Inspection

- With the big-end arbor [A] still on the V block [C], hold the connecting rod horizontally and measure the amount that the arbor [B] varies from being parallel with the surface plate over a 100 mm (3.94 in.) length of the arbor to determine the amount of connecting rod twist.

★If connecting rod twist exceeds the service limit, the connecting rod must be replaced.

Connecting Rod Twist
Service Limit: TIR 0.2/100 mm (0.008/3.94 in.)

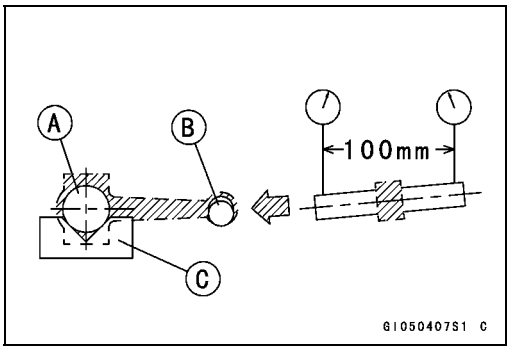

Transmission

Transmission Shaft Removal

- Split the crankcase (see Crankcase Disassembly).
- Pull out the shift rods [A] allowing the shift fork guide pins to free from the shift drum [B].
- Remove:
  Shift Drum
  Shift Forks [C]
- Pull out the drive shaft [D] and output shaft [E] together with their gears meshed.

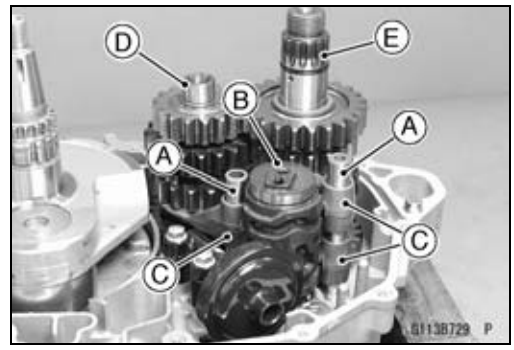

Transmission Shaft Installation

- Apply engine oil to the sliding portion of the transmission shaft, gears, and ball bearings.
- Install the drive shaft [A] and output shaft [B] in the right crankcase half with their gears meshed.

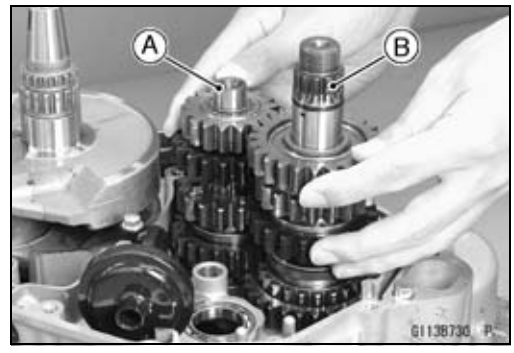

- Apply a small amount of engine oil to the shift fork fingers and fit each shift fork into the groove of the proper gear.

○Install each shift forks with its marks [A] facing the engine left side.

Marks:	043 (Drive shaft)
	044 (Output shaft)

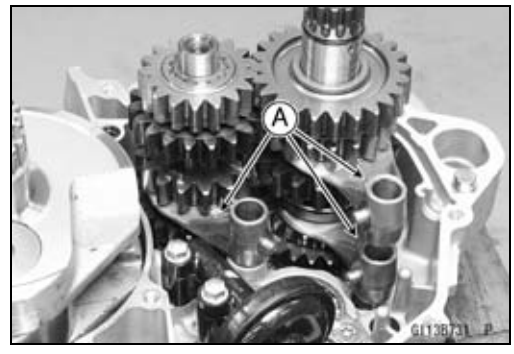

- Install the shift drum [A].
- Fit each shift fork guide pin into the corresponding groove in the shift drum.
- Apply a small amount of engine oil to the shift rods [B] and slide them into the shift forks.
- Assembly the crankcase (see Crankcase Assembly).

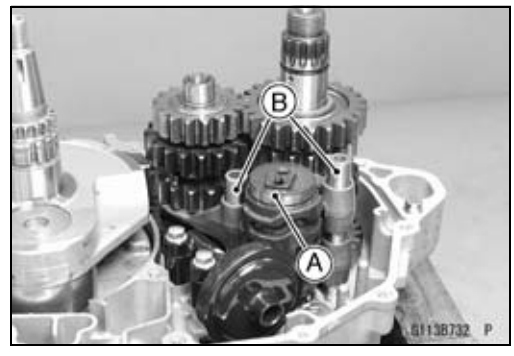

Transmission Shaft Disassembly

- Remove the transmission shafts (see Transmission Shaft Removal).
- Remove the circlips, washers, collar and gears.

Special Tool - Outside Circlip Pliers: 57001-144

NOTE

○*Do not reuse the removed circlips.*

Transmission

Transmission Shaft Assembly

- Apply engine oil liberally to the transmission shaft, gears and bearings.
- Replace any circlips that were removed with new ones.

○Always install the circlips [A] so that the opening [B] is aligned with a spline groove [C], and install toothed washers. To install a circlip without damage, first fit the circlip onto the shaft expanding it just enough to install it, and then use a suitable gear to push the circlip into place.

Special Tool - Outside Circlip Pliers: 57001-144

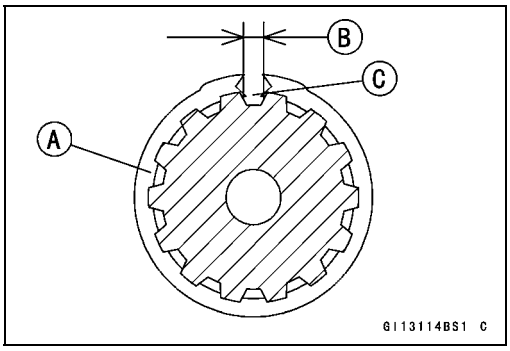

- When install the bushing (for 4th) [A] to the drive shaft, align the oil passage holes [B] each other.

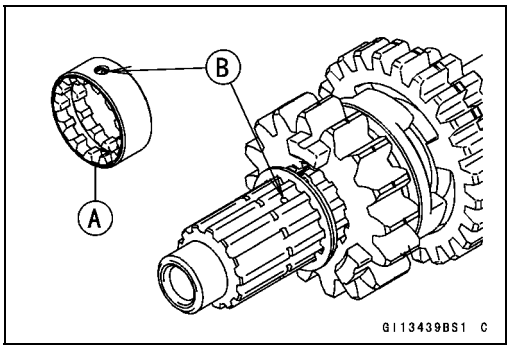

- The drive shaft gears can be identified by size; the smallest diameter gear is 1st gear, and the largest is 5th. Be sure that all parts are put back in the correct sequence, facing the proper direction, and that all circlips and the washers are properly in place.

- The output shaft gears can be identified by size; the largest diameter gear is 1st gear, and the smallest is 5th. Be sure that all parts are put back in the correct sequence, facing the proper direction, and that the circlip and collar are properly in place.

Transmission

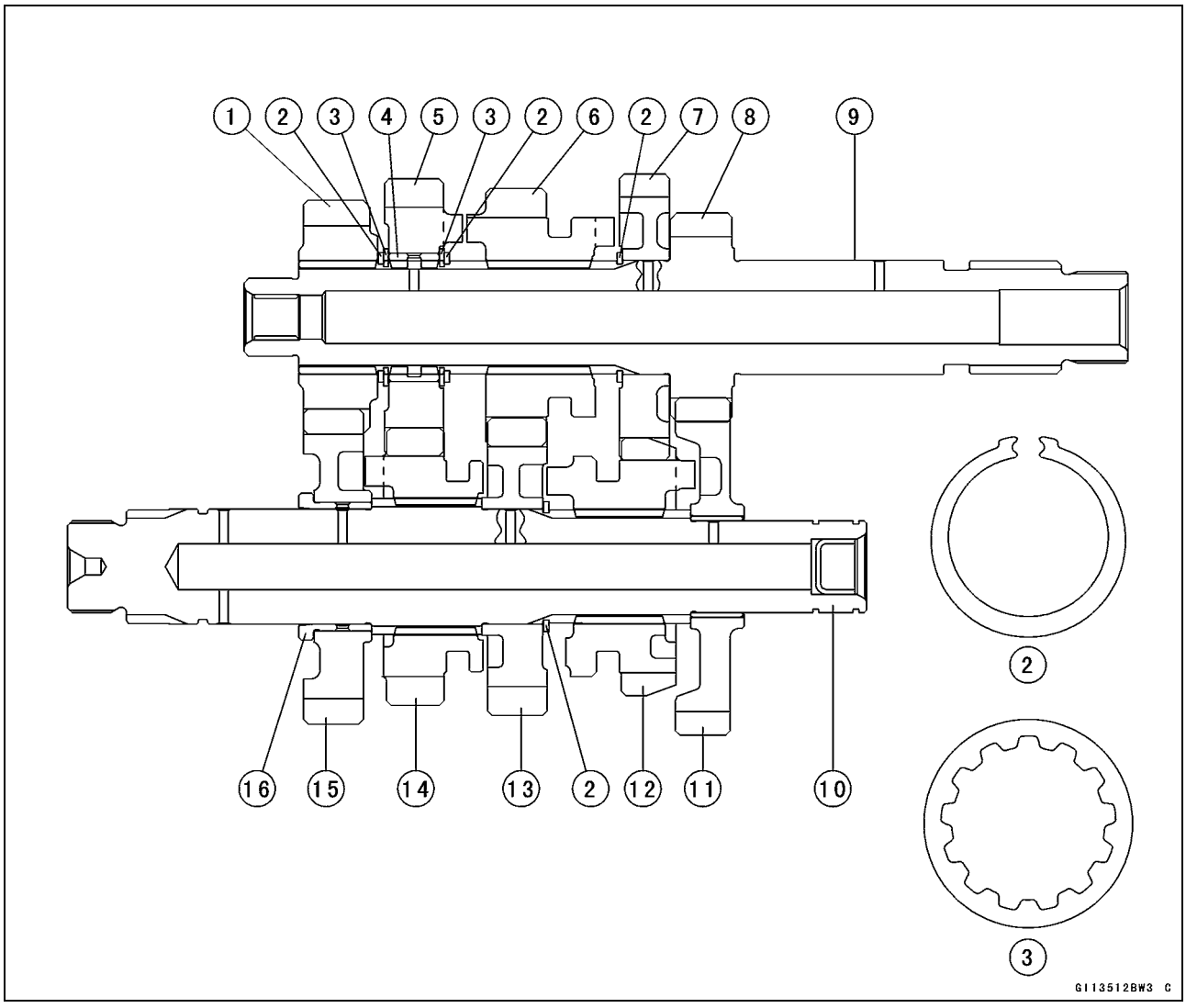

1. 2nd Gear (17T)
2. Circlip
3. Toothed Washer
4. Bushing
5. 4th Gear (19T)
6. 3rd Gear (16T)
7. 5th Gear (24T)
8. 1st Gear (16T)
9. Drive Shaft
10. Output Shaft
11. 1st Gear (28T)
12. 5th Gear (21T)
13. 3rd Gear (19T)
14. 4th Gear (19T)
15. 2nd Gear (24T)
16. Collar

- Check that each gear spins or slides freely on the transmission shaft without binding after assembly.

Transmission

Shift Fork Bending Inspection

- Visually inspect the shift forks, and replace any fork that is bent. A bent fork could cause difficulty in shifting, or allow the transmission to jump out of gear when under power.
  90° [A]

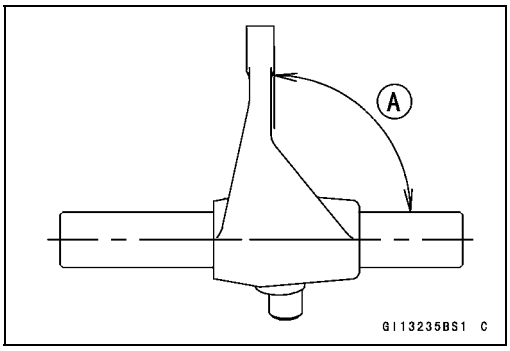

Shift Fork/Gear Groove Wear Inspection

- Measure the thickness [A] of the shift fork ears, and measure the width [B] of the gear grooves (with which the fork engages).

  Shift Fork Ear Thickness

  Standard: 4.9 ~ 5.0 mm (0.193 ~ 0.197 in.)

  Service Limit: 4.8 mm (0.189 in.)

  Gear Groove Width

  Standard: 5.05 ~ 5.15 mm (0.199 ~ 0.203 in.)

  Service Limit: 5.3 mm (0.209 in.)

★If the thickness of a shift fork ear is less than the service limit, the shift fork must be replaced.

★If the gear groove is worn exceeding the service limit, the gear must be replaced.

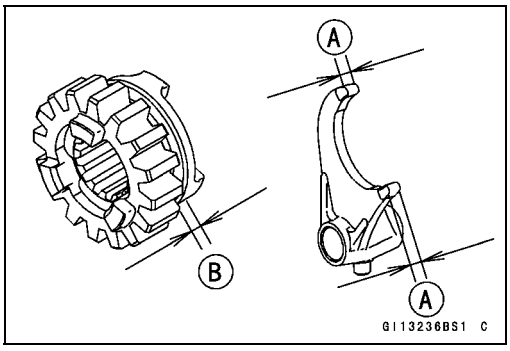

Shift Fork Guide Pin/Shift Drum Groove Wear Inspection

- Measure the diameter [A] of each shift fork guide pin, and measure the width [B] of each shift drum groove.

  Shift Fork Guide Pin Diameter

  Standard: 5.9 ~ 6.0 mm (0.232 ~ 0.236 in.)

  Service Limit: 5.8 mm (0.228 in.)

  Shift Drum Groove Width

  Standard: 6.05 ~ 6.20 mm (0.238 ~ 0.244 in.)

  Service Limit: 6.3 mm (0.248 in.)

★If the guide pin on any shift fork is less than the service limit, the fork must be replaced.

★If any shift drum groove is worn exceeding the service limit, the drum must be replaced.

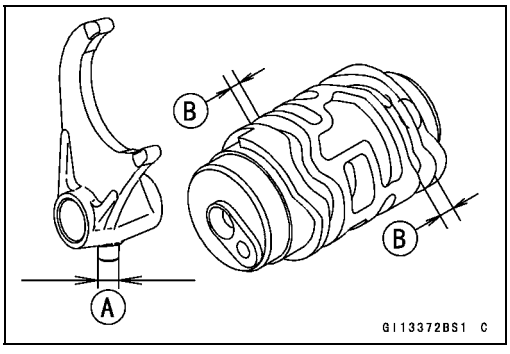

Gear Damage Inspection

- Visually inspect the gear dogs [A] and gear dog holes [B].

★Replace any damaged gears or gears with excessively worn dogs or dog holes.

- Visually inspect the gear teeth [C] on the transmission gears.

★Replace lightly damaged gear teeth with an oilstone. The gear must be replaced if the teeth are badly damaged.

★When gear is repaired or replaced, the driving gear should also be inspected and repaired or replaced if necessary.

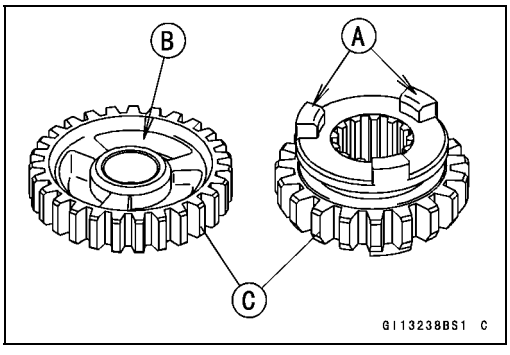

Balancer

Balancer Removal

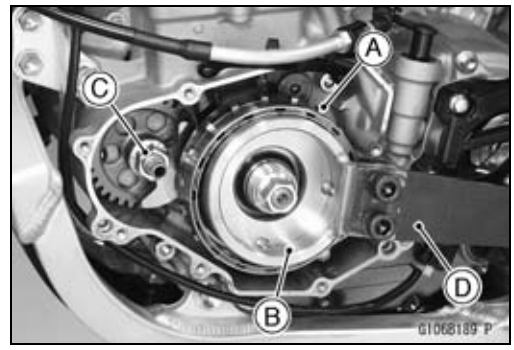

- Remove:
  Magneto Cover (see Magneto Cover Removal in the Electrical System chapter)
- Hold the flywheel [A] steady with the rotor holder [B], and loosen the balancer weight mounting nut [C].

  Special Tools - Grip [D]: 57001-1591
  Rotor Holder: 57001-1730
- Remove:
  Right Engine Cover (see Right Engine Cover Removal in the Clutch chapter)

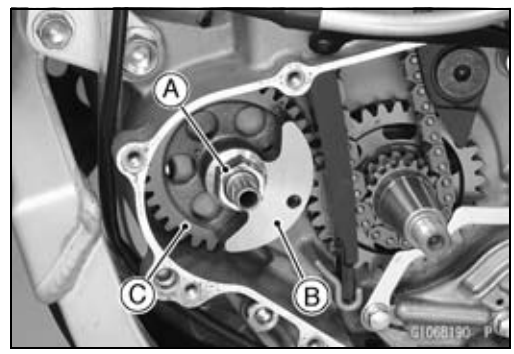

- Remove:
  Flywheel (see Flywheel Removal in the Electrical System chapter)
  Balancer Weight Mounting Nut [A]
  Balancer Weight [B]
  Balancer Gear [C]
- Pull out the balancer shaft from the right crankcase half.

Balancer Installation

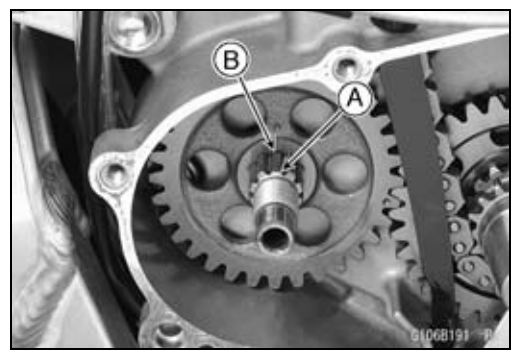

- Insert the balancer shaft from the right crankcase half.
- Install the balancer gear so that the stepped portion [A] on the balancer shaft is aligned with the short length tooth [B] on the balancer gear.

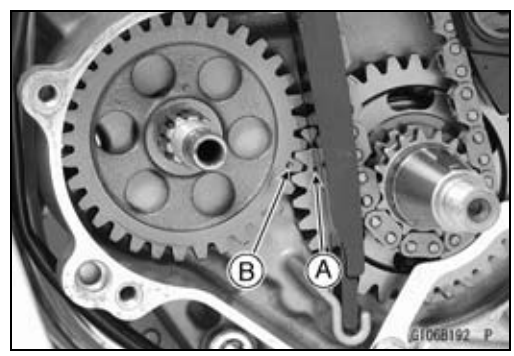

- Align the punch mark [A] on the balancer drive gear and punch mark [B] on the balancer gear.

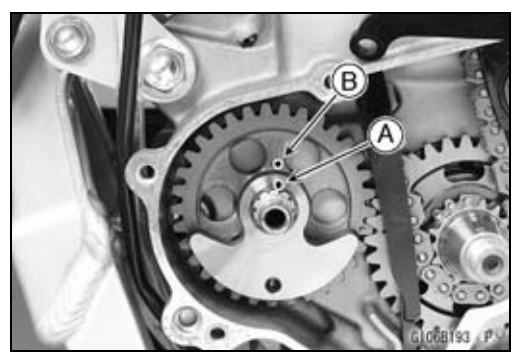

- Install the balancer weight.
  - ○Align the punch mark [A] on the balancer weight and punch mark [B] on the balancer gear.
- Tighten:

  Torque - Balancer Weight Mounting Nut: 52 N·m (5.3 kgf·m, 38 ft·lb)

Primary Gear

Primary Gear Removal

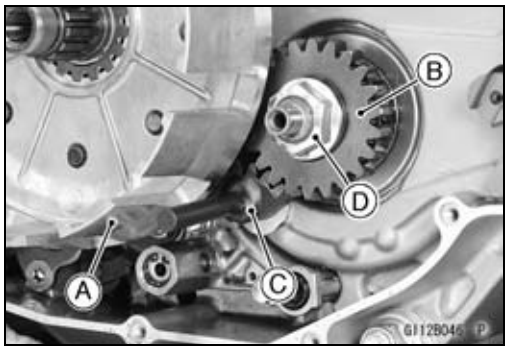

- Remove:
  Right Engine Cover (see Right Engine Cover Removal in the Clutch chapter)
  Clutch (see Clutch Removal in the Clutch chapter)
  Oil Pump Idle Gear (see Oil Pump (Feed) Removal in the Engine Lubrication System chapter)
- Temporarily install the clutch housing [A].
- Hold the primary gear [B] with the gear holder [C].

  Special Tool - Gear Holder, m2.0: 57001-1557
- Remove:
  Primary Gear Nut [D]
  Washer
  Clutch Housing
  Primary Gear
  Oil Pump Drive Gear

○The primary gear nut is left-hand threads.

Primary Gear Installation

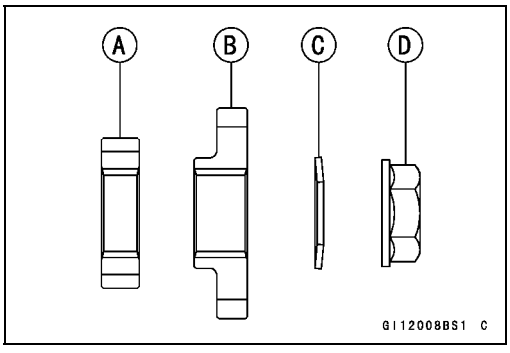

- Insert the oil pump drive gear [A] and primary gear [B] to the crankshaft.
- Install the washer [C] as shown in the figure.
- Install the primary gear nut [D].

○The primary gear nut is left-hand threads.

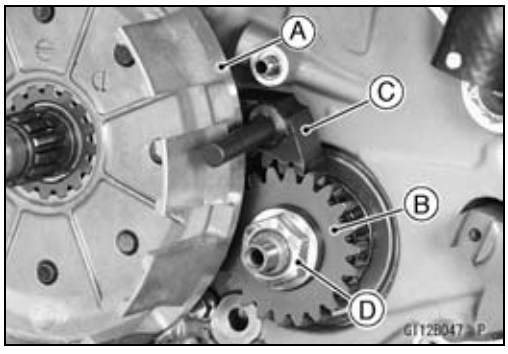

- Temporarily install the clutch housing [A].
- Hold the primary gear [B] with the gear holder [C].

  Special Tool - Gear Holder, m2.0: 57001-1557
- Tighten:

  Torque - Primary Gear Nut [D]: 98 N·m (10 kgf·m, 72 ft·lb)

○The primary gear nut is left-hand threads.

- Install the removed parts (see appropriate chapters).

External Shift Mechanism

Shift Pedal Removal

- Remove:
  Shift Pedal Bolt [A]
  Shift Pedal [B]

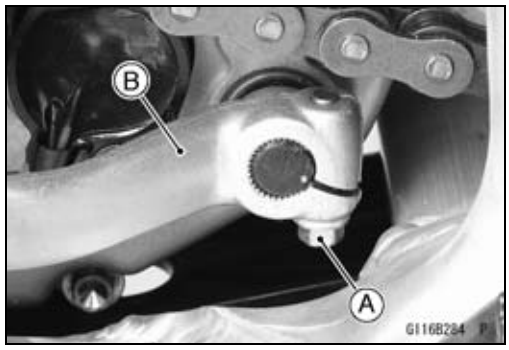

Shift Pedal Installation

- Install the shift pedal so that the slit [A] on the pedal aligns with the punch mark [B] on the shift shaft.
- Tighten:

  Torque - Shift Pedal Bolt: 9.8 N·m (1.0 kgf·m, 87 in·lb)

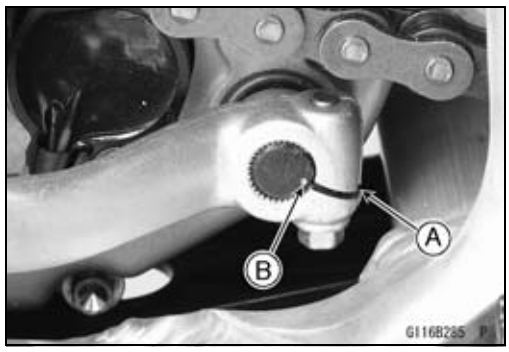

External Shift Mechanism Removal

- Remove:
  Right Engine Cover (see Right Engine Cover Removal in the Clutch chapter)
  Clutch (see Clutch Removal in the Clutch chapter)
  Shift Pedal (see Shift Pedal Removal)
  Oil Pump Driven Gear [A] (see Oil Pump (Feed) Removal in the Engine Lubrication System chapter)
- Pull out the shift shaft [B].

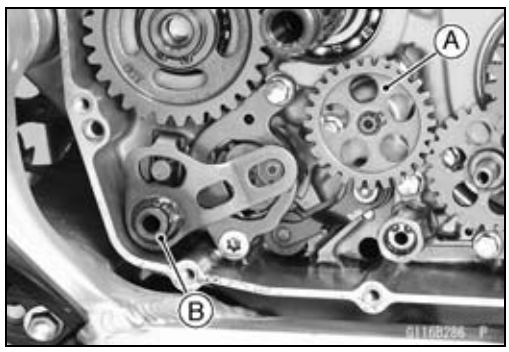

- Remove:
  Collar [A]
  Ratchet Plate Bolt [B]
  Ratchet Plate Screw [C]
- While compressing the pawls [D], take off the shift ratchet assembly [E] with ratchet plate [F].

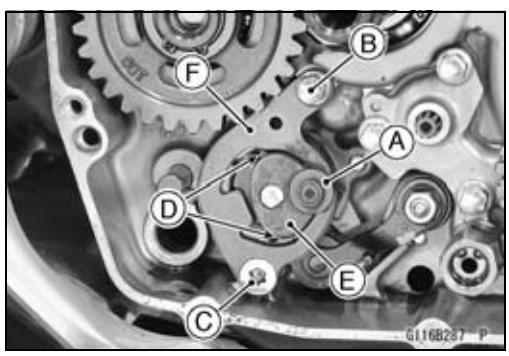

- Remove the shift drum cam bolt [A].
- Push down the gear positioning lever [B] with the screw driver [C], and remove the shift drum cam [D] and pin.
- Remove:
  Gear Position Lever Nut [E] and Washer [F]
  Gear Position Lever
  Collar
  Spring

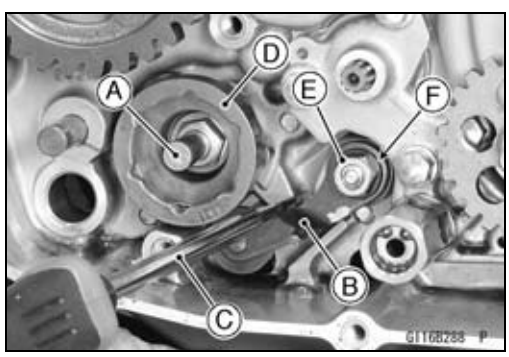

External Shift Mechanism Installation

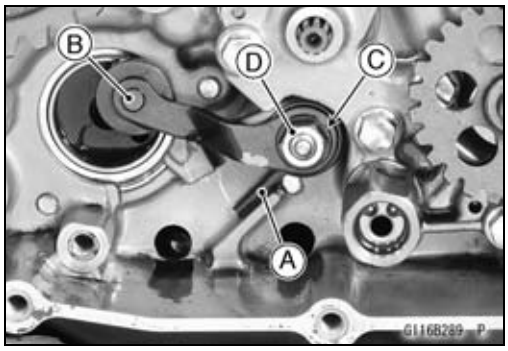

- Install the spring [A], collar and gear positioning lever [B].
○Fit each end of the spring to the original positions.
- Install the washer [C].
- Tighten:

Torque - Gear Positioning Lever Nut [D]: 8.8 N·m (0.90 kgf·m, 78 in·lb)

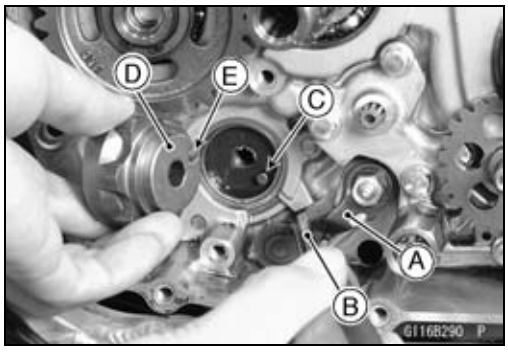

- Push down the gear positioning lever [A] with the screw driver [B] and install the pin [C] and shift drum cam [D].
○Fit the groove [E] on the pin.
- Apply a non-permanent locking agent to the threads of the shift drum cam bolt.
- Tighten:

Torque - Shift Drum Cam Bolt: 24 N·m (2.4 kgf·m, 18 ft·lb)

- Align the roller of the gear positioning lever with the slot of the shift drum cam.

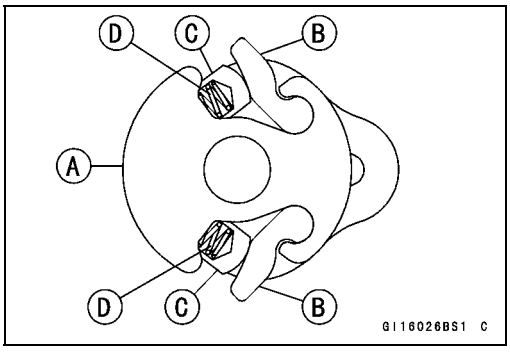

- Set up the shift ratchet assembly as shown in the figure.
  Ratchet [A]
  Pawls [B]
  Pins [C]
  Springs [D]

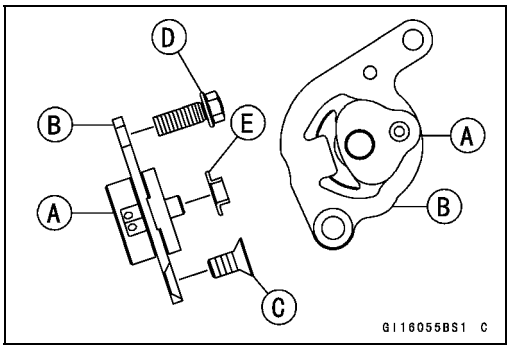

- Install the shift ratchet assembly [A] to the ratchet plate [B] as shown in the figure.
- While compressing the pawls, install the shift ratchet assembly to the ratchet plate.
- Apply a non-permanent locking agent to the threads of the ratchet plate screw [C].
- Tighten the ratchet plate screw first, and then the ratchet plate bolt [D].

Torque - Ratchet Plate Screw: 15 N·m (1.5 kgf·m, 11 ft·lb)
Ratchet Plate Bolt: 9.8 N·m (1.0 kgf·m, 87 in·lb)

- Install the collar [E].

External Shift Mechanism

- Before installing the shift shaft, apply grease to the oil seal lips and shift shaft splines.
- Insert the shift shaft [A].

○Take care not to damage the oil seal when inserting the shift shaft.

- Install the removed parts (see appropriate chapters).

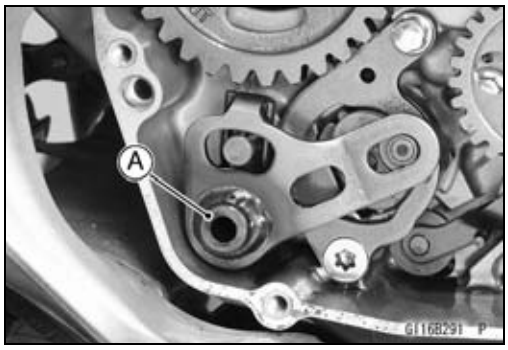

External Shift Mechanism Inspection

- Remove the shift shaft (see External Shift Mechanism Removal).
- Check the shift shaft [A] for bending or damage to the splines.

★If the shaft is bent, straighten or replace it. If the splines are damaged, replace the shift shaft.

- Check the return spring [B] for cracks or distortion.

★If the spring is damaged in any way, replace it.

- Check the shift lever [C] for distortion.

★If the shift lever is damaged in any way, replace the shift shaft.

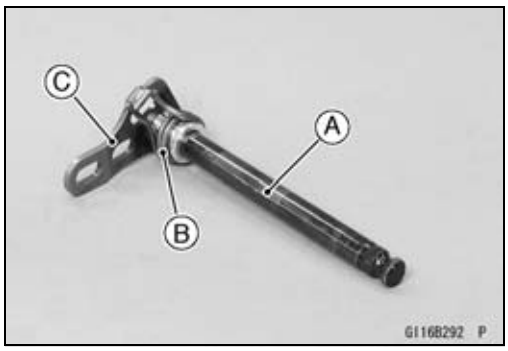

- Check the shift ratchet assembly for any damage.

★If the ratchet [A], pawls [B], pins [C] or springs [D] are damaged in any way, replace them.

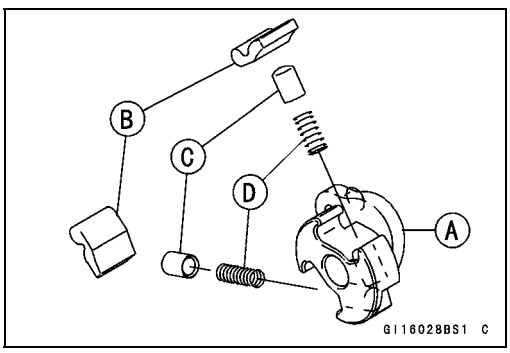

- Visually inspect the shift drum cam [A].

★If it is badly worn or if it shows any damage, replace it.

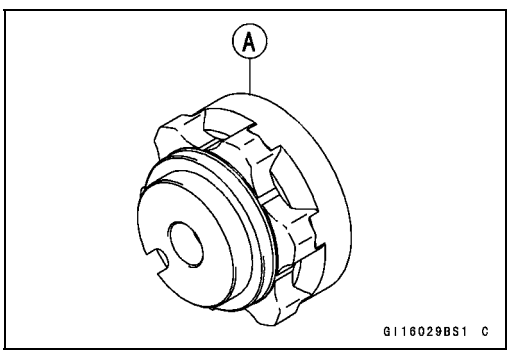

- Check the gear positioning lever [A] and its spring [B] for breaks or distortion.

★If the lever or spring is damaged in any way, replace them.

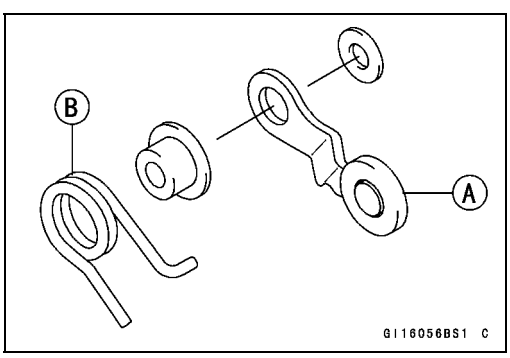

Kickstarter

Kick Pedal Assy Removal

- Remove:
  Kick Pedal Bolt [A] and Washer
  Kick Pedal Assy [B]

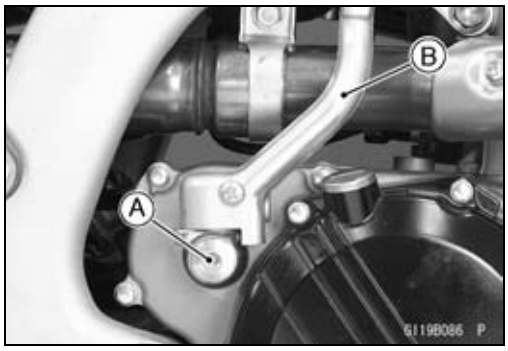

Kick Pedal Assy Installation

- Install the kick pedal assy.

○Put the pedal end [A] near the cylinder head mating surface [B].

- Apply a non-permanent locking agent to the threads of the kick pedal bolt.
- Install the washer, and tighten the kick pedal bolt.

Torque - Kick Pedal Bolt: 25 N·m (2.5 kgf·m, 18 ft·lb)

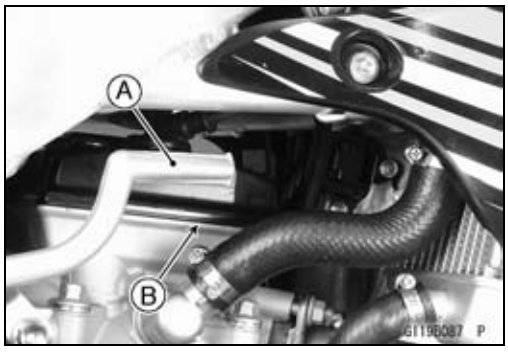

Kick Pedal Assy Disassembly

- Remove the kick pedal assy (see Kick Pedal Assy Removal).
- Remove:
  Plug Screw [A]
  Spring [B]
  Steel Ball [C]
  Detent Screw [D]
  Boss [E]
  Oil Seal [F]

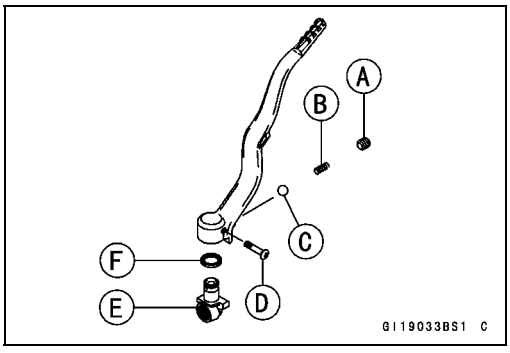

Kick Pedal Assy Assembly

- Replace the oil seal [A], plug screw [B] and detent screw [C].
- Apply grease to the steel ball, oil seal lip, spring, and the sliding portion of the pedal.
- Install:
  Oil Seal
  Boss [D]
  Detent Screw
  Steel Ball [E]
  Spring [F]
  Plug Screw
- Tighten the detent screw and plug screw.
- After tightening the two screws, stake them with a punch.

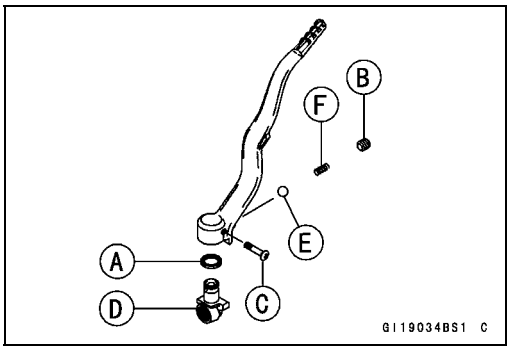

Kickstarter

Idle Gear Removal

- Remove:
  Right Engine Cover (see Right Engine Cover Removal in the Clutch chapter)
  Clutch (see Clutch Removal in the Clutch chapter)
  Circlip [A]
  Idle Gear [B]

Special Tool - Outside Circlip Pliers: 57001-144

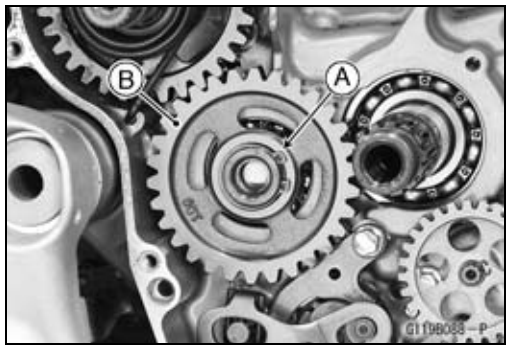

Idle Gear Installation

- Make sure to position the circlip [A] in original position. Replace it, if removed.
- Apply molybdenum disulfide oil to the inside [B] of the idle gear.

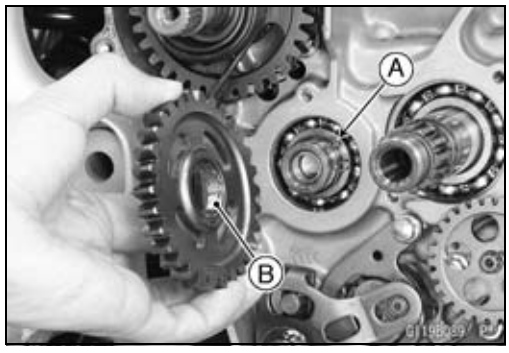

- Replace the circlip [A] with a new one.
- Install the idle gear [B] so that the “OUT” mark [C] faces outward.
- Install the circlip.

Special Tool - Outside Circlip Pliers: 57001-144

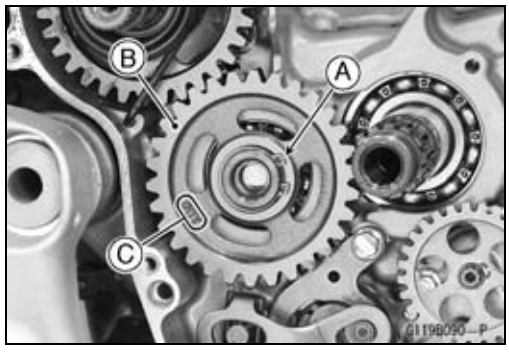

Kickshaft Removal

- Remove:
  Right Engine Cover (see Right Engine Cover Removal in the Clutch chapter)
  Clutch (see Clutch Removal in the Clutch chapter)
- Pull the end [A] of the kick spring [B] out of the hole in the crankcase.
- Turn the kickshaft counterclockwise [C] and pull out the kickstarter assembly [D].

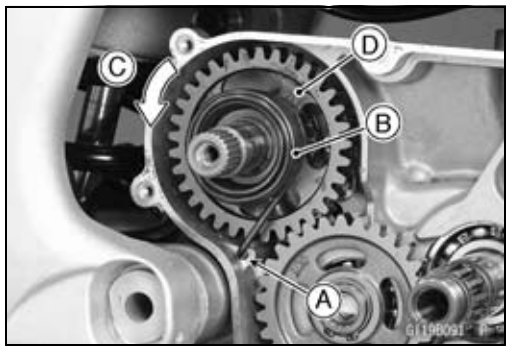

- Remove the bolt [A], and take off the ratchet guide [B].

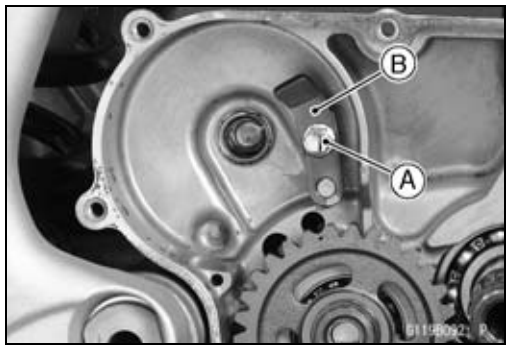

Kickstarter

Kickshaft Installation

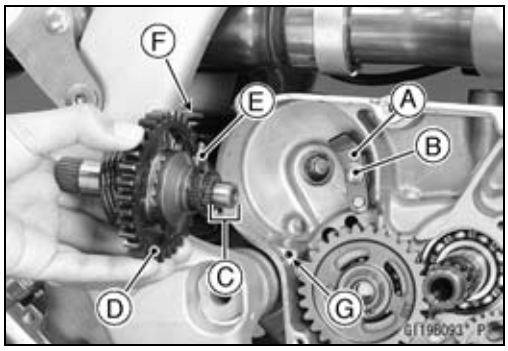

- Install the ratchet guide [A] pushing it to counterclockwise.
- Tighten:

  Torque - Ratchet Guide Bolt [B]: 8.8 N·m (0.90 kgf·m, 78 in·lb)

- Apply molybdenum disulfide grease to the end [C] of the kick shaft.
- Insert the kick shaft assembly [D] into the crankcase.

○Securely engage the stopper portion [E] of the ratchet gear with the guide.

- Insert the spring end [F] into the hole [G].
- Install the removed parts (see appropriate chapter).

Kick Shaft Assembly Disassembly/Assembly

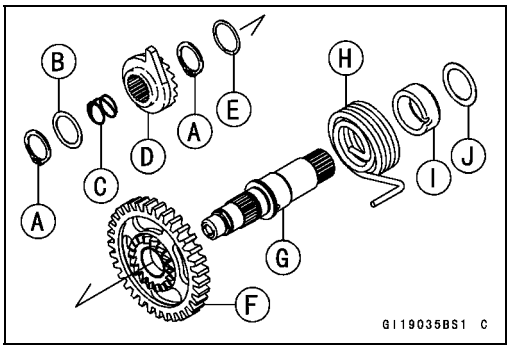

- The kick shaft assembly consists of the following parts.
  Circlips [A]
  Washer (ϕ24 × ϕ18.3) [B]
  Spring [C]
  Ratchet Gear [D]
  Washer (ϕ22 × ϕ18.3) [E]
  Kick Gear [F]
  Kick Shaft [G]
  Kick Spring [H]
  Spring Guide [I]
  Washer (ϕ28 × ϕ20.3) [J]
- Check the kick shaft assembly parts for damage. Any damaged parts should be replaced with new ones.

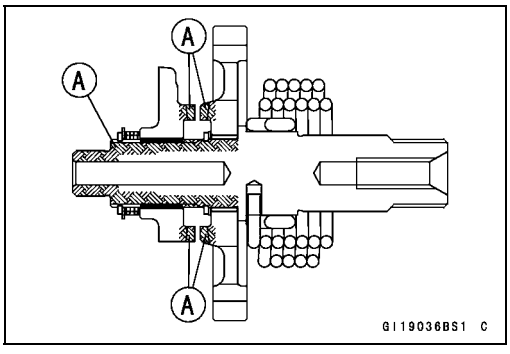

- Apply molybdenum disulfide grease [A] to the kick gear, ratchet gear and kick shaft.
- Replace the circlips that were removed with new ones.

  Special Tool - Outside Circlip Pliers: 57001-144

NOTE

○*When assembling the ratchet gear [A] onto the kick shaft [B], align the punch mark [C] on the ratchet gear with the punch mark [D] on the kick shaft.*

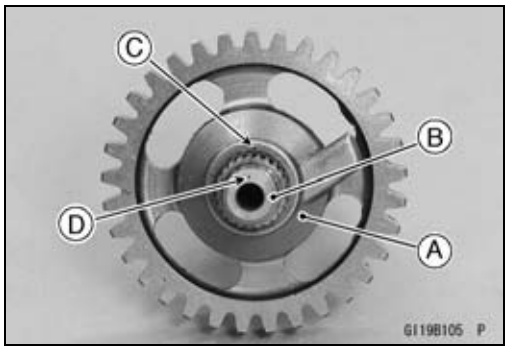

Kickstarter

- Apply grease to the inside of the spring guide [A].
- Fit the spring end [B] and hollow [C] on the spring guide.

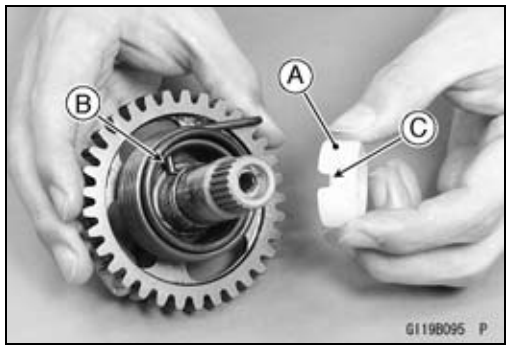

Bearings/Oil Seals

Bearing Replacement

NOTICE
Do not remove the ball or needle bearings unless it is necessary. Removal may damage them.

- Using a press or puller, remove the ball bearing and/or needle bearings.

NOTE

○*In the absence of the above mentioned tools, satisfactory results may be obtained by heating the case to approximately 93°C (200°F) max, and tapping the bearing in or out*

NOTICE
Do not heat the case with a torch. This will warp the case. Soak the case in oil and heat the oil.

- Using a press and the bearing driver set [A], install the new ball bearing until it stops at the bottom of its housing.

○The new needle bearings must be pressed into the crankcase so that the end is flush with the end of the hole.

Special Tool - Bearing Driver Set: 57001-1129

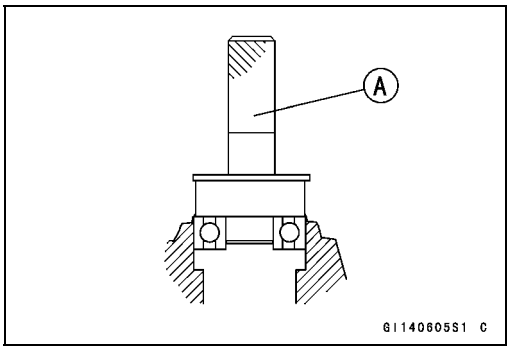

Bearing Wear Inspection

NOTICE
Do not remove the bearings for inspection. Removal may damage them.

- Check the ball bearings.

○Since the ball bearings are made to extremely close tolerances, the wear must be judged by feel rather than measurement. Clean each bearing in a high flash-point solvent, dry it (do not spin the bearing while it is dry), and oil it with engine oil to it.

○Spin [A] the bearing by hand to check its condition.

★If the bearing is noisy, does not spin smoothly, or has any rough spots, replace it.

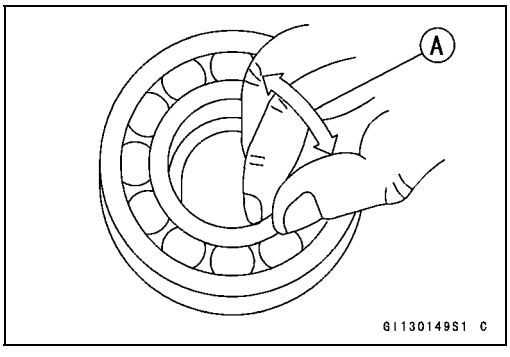

Bearings/Oil Seals

● Inspect the needle bearings.

○The rollers in a needle bearing normally wear very little, and wear is difficult to measure. Instead of measuring, inspect the bearing for abrasion, color change, or other damage.

★If there is any doubt as to the condition of a needle bearing, replace it.

Oil Seal Inspection

● Inspect the oil seals.

★Replace the oil seal if the lips are deformed, discolored (indicating that the rubber has deteriorated), hardened or otherwise damaged.

Wheels/Tires

Table of Contents

Exploded View 10-2
Specifications 10-4
Special Tools 10-5
Wheels (Rims) 10-6
Front Wheel Removal 10-6
Front Wheel Installation 10-6
Rear Wheel Removal 10-7
Rear Wheel Installation 10-8
Wheels Inspection 10-9
Spoke Tightness Inspection 10-9
Rim Runout Inspection 10-9
Rim Installation Position 10-10
Axle Inspection 10-10
Tires 10-11
Air Pressure Inspection/Adjustment 10-11
Tire Removal 10-11
Tire Installation 10-12
Hub Bearing 10-14
Front Hub Bearing Removal 10-14
Rear Hub Bearing Removal 10-14
Hub Bearing Installation 10-15
Hub Bearing Inspection 10-16
Hub Bearing Lubrication 10-16

Exploded View

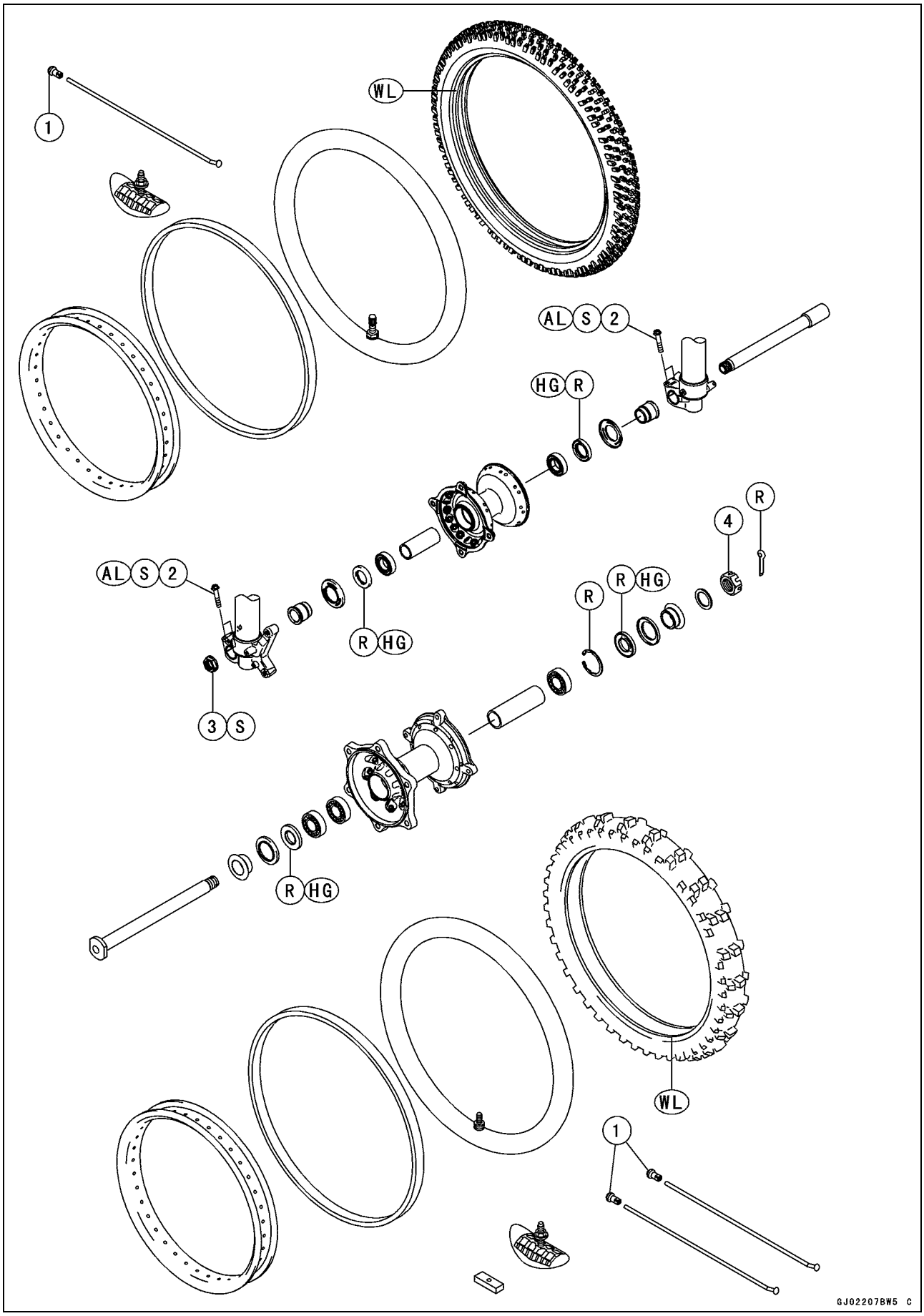

Exploded View

No.	Fastener	Torque			Remarks
		N·m	kgf·m	ft·lb	
1	Spoke Nipples	Not less than 2.2	Not less than 0.22	Not less than 19 in·lb	
2	Front Axle Clamp Bolts	20	2.0	15	AL, S
3	Front Axle Nut	78	8.0	58	S
4	Rear Axle Nut	108	11.0	79.7	

AL: Tighten the two clamp bolts alternately two times to ensure even tightening torque.
HG: Apply high-temperature grease.
R: Replacement Parts
S: Follow the specified tightening sequence.
WL: Apply soap and water solution or rubber lubricant.

Specifications

Item	Standard	Service Limit
Wheels (Rims)		
Rim Size:		
Front	21 × 1.60	– – –
Rear	19 × 2.15	– – –
Rim Runout:		
Axial	TIR 1.0 mm (0.04 in.) or less	TIR 2.0 mm (0.08 in.)
Radial	TIR 1.0 mm (0.04 in.) or less	TIR 2.0 mm (0.08 in.)
Axle Runout/100 mm (3.94 in.)	TIR 0.03 mm (0.001 in.) or less	TIR 0.2 mm (0.008 in.)
Tires		
Air Pressure (when cold):		
Front/Rear	100 kPa (1.00 kgf/cm², 14 psi)	– – –
Standard Tire:		
Front:		
Size	80/100-21 51M	– – –
Make	BRIDGESTONE	– – –
Type	M403, Tube	– – –
Rear:		
Size	120/80-19 63M	– – –
Make	BRIDGESTONE	– – –
Type	M404, Tube	– – –

Special Tools

Inside Circlip Pliers:
57001-143

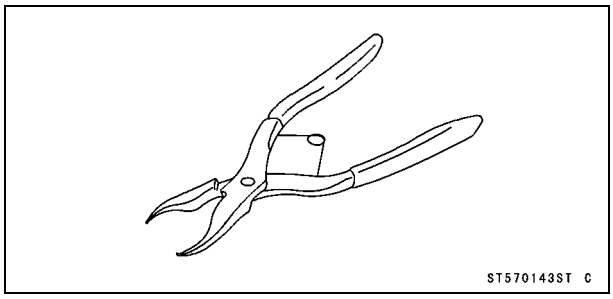

Rim Protector:
57001-1063

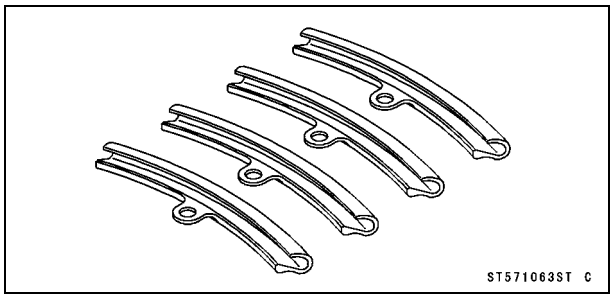

Bearing Driver Set:
57001-1129

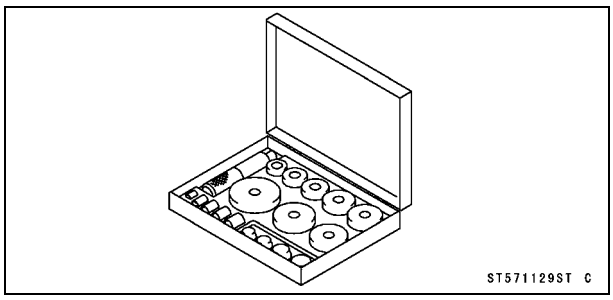

Jack:
57001-1238

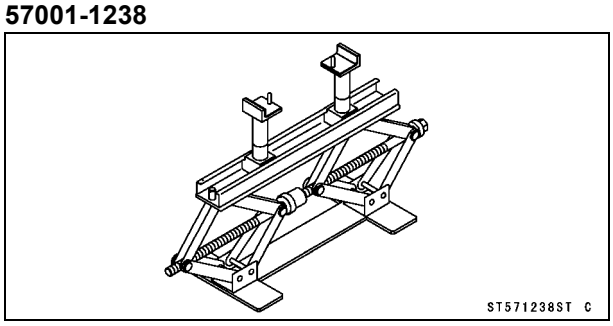

Bearing Remover Head, ϕ20 × ϕ22:
57001-1293

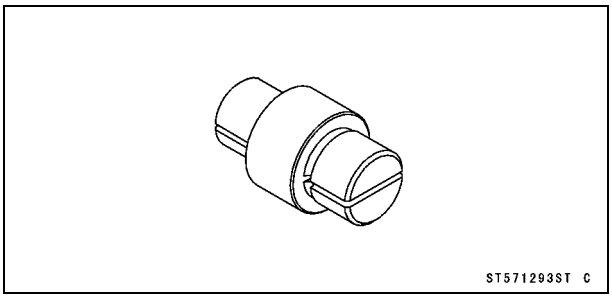

Bearing Remover Head, ϕ25 × ϕ28:
57001-1346

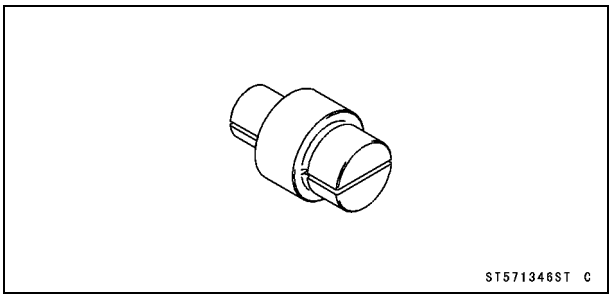

Bearing Remover Shaft, ϕ13:
57001-1377

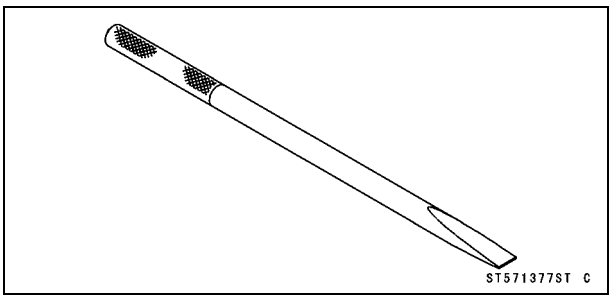

Jack Attachment:
57001-1608

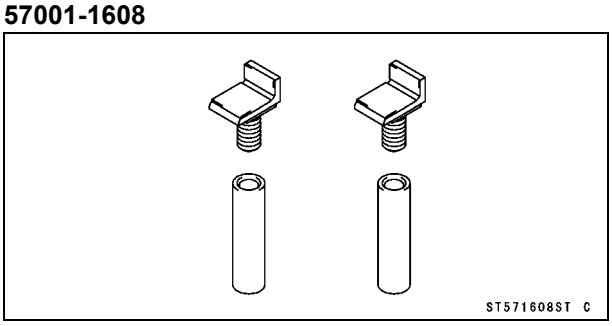

Wheels (Rims)

Front Wheel Removal

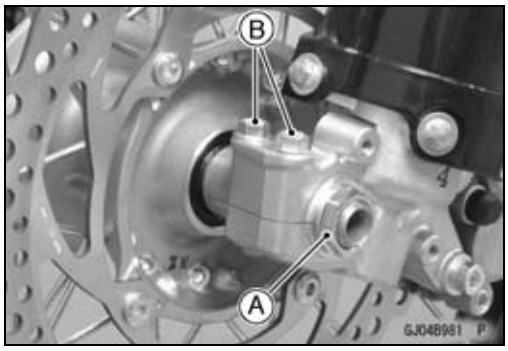

- Remove the axle nut [A].
- Loosen the axle clamp bolts [B] on both sides.
- Raise the front wheel off the ground with jack.

Special Tools - Jack: 57001-1238
Jack Attachment: 57001-1608

- Pull out the axle and remove the wheel.

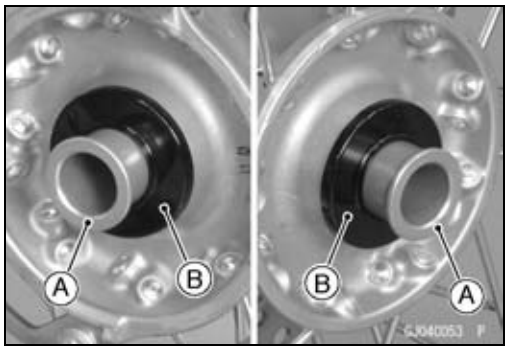

- Remove the collars [A] with caps [B] on both sides.

NOTICE
Do not lay the wheel on the ground with the disc facing down. This can damage or warp the disc. Place blocks under the wheel so the disc does not touch the ground.

- Insert a wood wedge between the brake pads.
  - ○This prevents them from being moved out of their proper position, should the brake lever be squeezed accidentally.

Front Wheel Installation

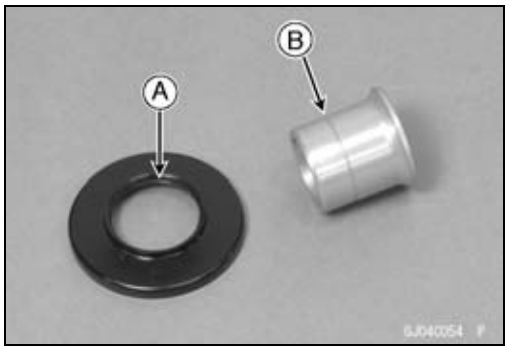

- Apply high-temperature grease to the grease seal lips.
- Install the caps and collars to the hub on both sides.
  - ○Fit the projection [A] and groove [B].
- Install the front wheel.

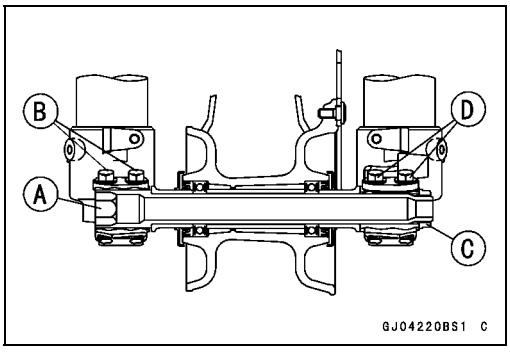

- Insert the axle [A] from right side.
- Screw the front axle clamp bolts (right) [B] temporarily.
- Tighten:

Torque - Front Axle Nut [C]: 78 N·m (8.0 kgf·m, 58 ft·lb)
Front Axle Clamp Bolts (Left) [D]: 20 N·m (2.0 kgf·m, 15 ft·lb)

NOTE

○*Tighten the two clamp bolts alternately two times to ensure even tightening torque.*

- Loosen the front axle clamp bolts (right).
- Remove the jack.

Wheels (Rims)

- Pump the front fork up and down [A] 4 or 5 times to align both fork positions.

NOTE

○*Put a block [B] in front of the wheel to stop moving.*
○*Do not apply the front brake.*

- Tighten:

Torque - Front Axle Clamp Bolts (Right): 20 N·m (2.0 kgf·m, 15 ft·lb)

NOTE

○*Tighten the two clamp bolts alternately two times to ensure even tightening torque.*

- Check the front brake for good braking power and no brake drag.

⚠ WARNING

After servicing, it takes several applications of the brake lever before the brake pads contact the disc, which could result in increased stopping distance and cause an accident resulting in injury or death. Do not attempt to ride the motorcycle until a firm brake lever is obtained by pumping the lever until the pads are against the disc.

Rear Wheel Removal

- Using the jack under the frame so that the rear wheel is raised off the ground.

Special Tools - Jack: 57001-1238
Jack Attachment: 57001-1608

- Squeeze the front brake lever, and hold it with a band [A] to prevent the motorcycle from running forward.

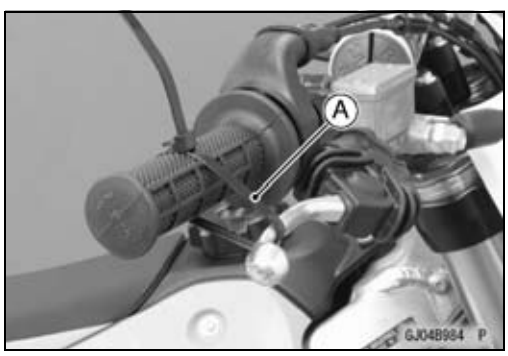

⚠ WARNING

Motorcycle may fall over unexpectedly resulting in an accident or injury. Be sure to hold the front brake when removing the rear wheel.

NOTICE

Be sure to hold the front brake when removing the rear wheel, or the motorcycle may fall over. The rear wheel or the motorcycle could be damaged.

- Remove:
  Drive Chain (see Drive Chain Removal in the Final Drive chapter)
  Disc Guard Bolts [A] and Washers
  Disc Guard [B]
  Cotter Pin [C]
  Rear Axle Nut [D]
- Pull out the axle, and remove the chain adjuster on both sides.
- Remove the rear wheel.

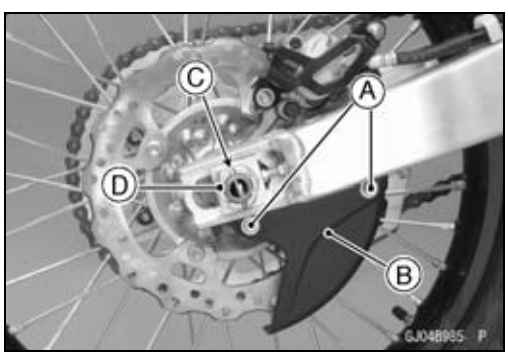

Wheels (Rims)

- Remove the collars [A] with caps [B] on both sides.

NOTICE
Do not lay the wheel on the ground with the disc facing down. This can damage or warp the disc. Place blocks under the wheel so the disc does not touch the ground.

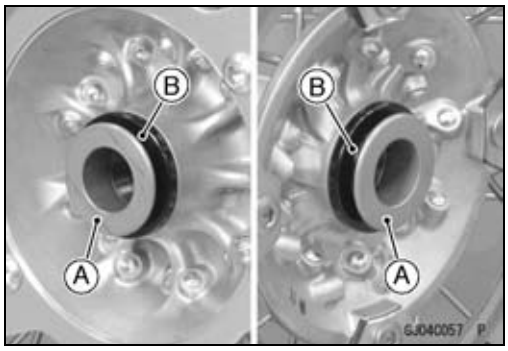

- Insert a wood wedge between the brake pads.

○This prevents them from being moved out of their proper position, should the brake pedal be squeezed accidentally.

Rear Wheel Installation

- Fit the groove [A] of the caliper holder and swingarm rib [B].

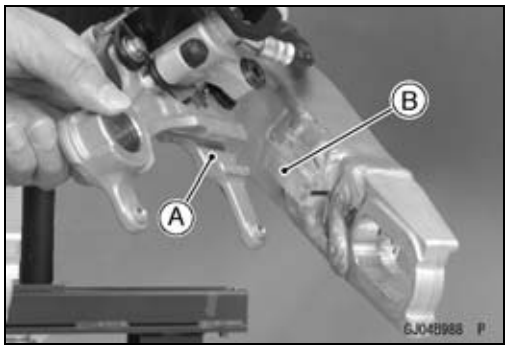

- Apply high-temperature grease to the oil seal lips.
- Install the caps and collars to the hub on both sides.

○Fit the projection [A] and groove [B].

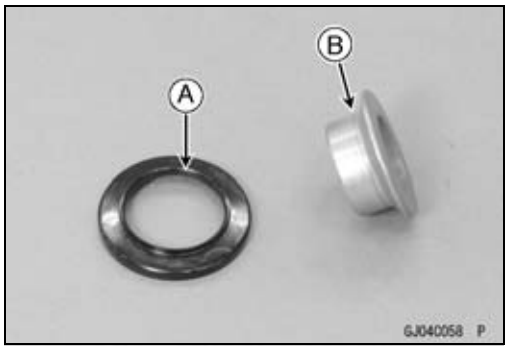

- Install the rear wheel.
- Install the chain adjusters on the swingarm as shown in the figure.
  Adjuster [A] (Left Side)
  Flat Adjuster [B] (Right Side)
- Insert the axle from left side, and temporarily tighten the axle nut.
- Install the drive chain (see Drive Chain Installation in the Final Drive chapter).
- Tighten:

Torque - Rear Axle Nut: 108 N·m (11.0 kgf·m, 79.7 ft·lb)

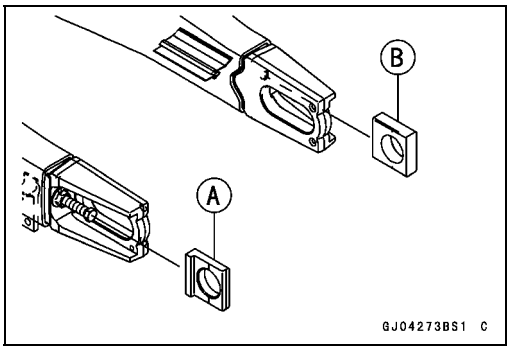

Wheels (Rims)

- Insert a new cotter pin [A].

NOTE

○*When inserting the cotter pin, if the slots in the nut do not align with the cotter pin hole in the axle, tighten the nut clockwise [B] up to next alignment.*
○*It should be within 30°.*
○*Loosen once and tighten again when the slot goes past the nearest hole.*

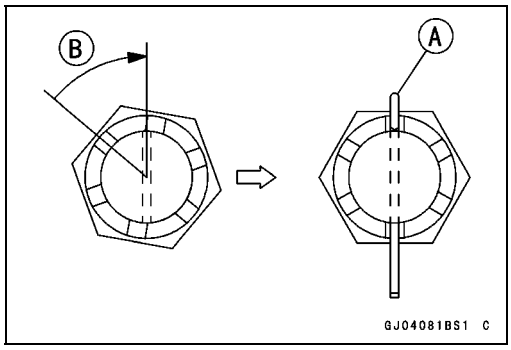

- Bend the cotter pin [A] over the nut.

⚠ WARNING

A loose axle nut can lead to an accident resulting in serious injury or death. Tighten the axle nut to the proper torque and install a new cotter pin.

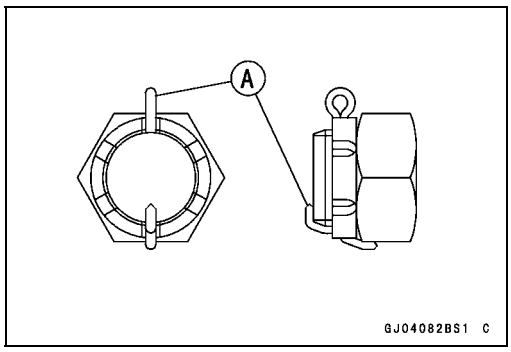

- Check the rear brake for good braking power and no brake drag.

⚠ WARNING

After servicing, it takes several applications of the brake pedal before the brake pads contact the disc, which could result in increased stopping distance and cause an accident resulting in injury or death. Do not attempt to ride the motorcycle until a firm brake pedal is obtained by pumping the pedal until the pads are against the disc.

Wheels Inspection

- Refer to the Wheel Bearing Inspection in the Periodic Maintenance chapter.

Spoke Tightness Inspection

- Refer to the Spoke Tightness Inspection in the Periodic Maintenance chapter.

Rim Runout Inspection

- Refer to the Rim Runout Inspection in the Periodic Maintenance chapter.

Wheels (Rims)

Rim Installation Position

- When installing the rim, set the rim following position.

○The distance [A] from the brake disc seating surface [B] of the front hub [C] to left end of the front rim [D] should be as follows.
View from Front [E]
Distance: 26.5 ±0.5 mm (1.04 ±0.020 in.)

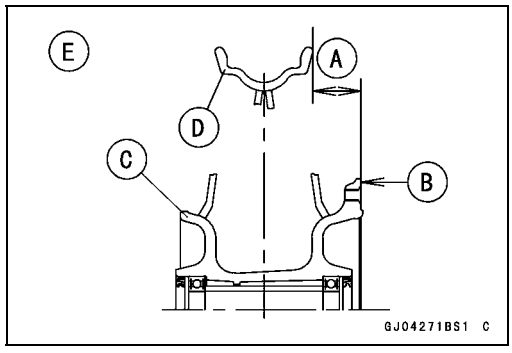

○The distance [A] from the brake disc seating surface [B] of the rear hub [C] to right end of the rear rim [D] should be as follows.
View from Rear [E]
Distance: 28.5 ±0.5 mm (1.12 ±0.020 in.)

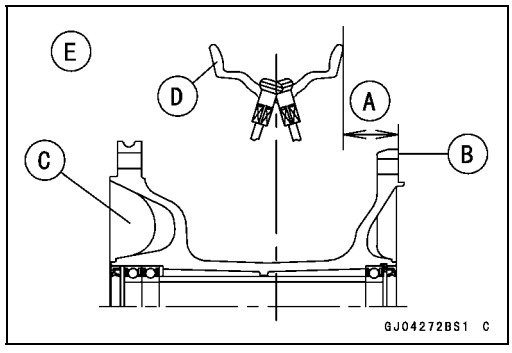

- Check the rim runout (see Rim Runout Inspection in the Periodic Maintenance chapter).

Axle Inspection

- Visually inspect the front and rear axle for damages.

★If the axle is damaged or bent, replace it.

- Place the axle on V blocks that are 100 mm (3.94 in.) [A] apart, and set a dial gauge [B] on the axle at a point halfway between the blocks.
- Turn [C] the axle to measure the runout.

○The difference between the highest and lowest dial readings is the amount of runout.

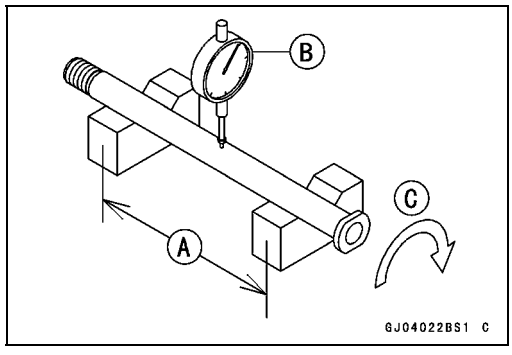

Axle Runout/100 mm (3.94 in.)

Standard:	**TIR 0.03 mm (0.001 in.) or less**
Service Limit:	**TIR 0.2 mm (0.008 in.)**

★If the runout exceeds the service limit, replace the axle.

Tires

Air Pressure Inspection/Adjustment

- Refer to the Air Pressure Inspection/Adjustment in the Periodic Maintenance chapter.

Tire Removal

- Remove the wheel (see Front/Rear Wheel Removal).

NOTICE
Do not lay the front wheel on the ground with the disc facing down. This can damage or warp the disc. Place blocks under the wheel so that the disc does not touch the ground.

- To maintain wheel balance, mark [A] the air valve position on the tire with chalk so that the tire can be reinstalled in the same position.
  Align [B]
- Remove the air valve cap [C].

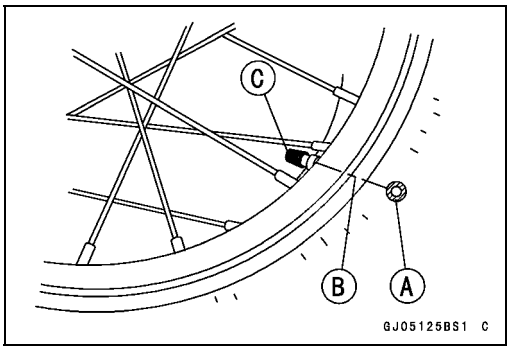

- Take out the valve core [A] to let out the air.
- Remove the air valve nut.

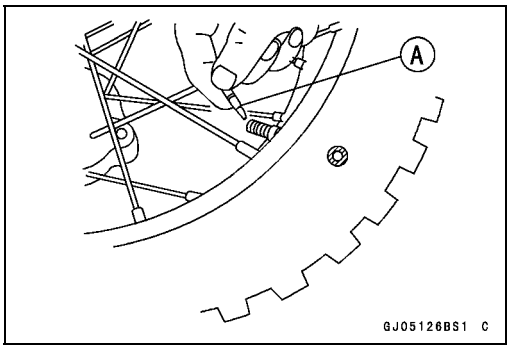

- Loosen the bead protector nut [A].
- Lubricate the tire beads and rim flanges on both sides with a soap and water solution or rubber lubricant. This helps the tire beads slip off the rim flanges.

NOTICE
Never lubricate with engine oil or petroleum distillates because they will deteriorate the tire.

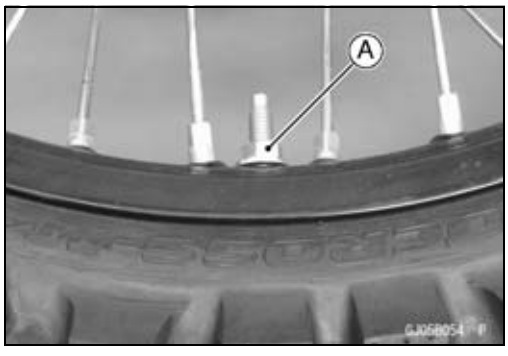

- Break the beads away from both sides of the rim with a suitable bead breaker.
- Lubricate the suitable tire irons [A] and rim protectors [B] with soap and water solution or rubber lubricant.

Special Tool - Rim Protector: 57001-1063

- Step on the side of the tire opposite air valve, and pry the tire off the rim with the tire irons of the bead breaker protecting the rim with rim protectors.

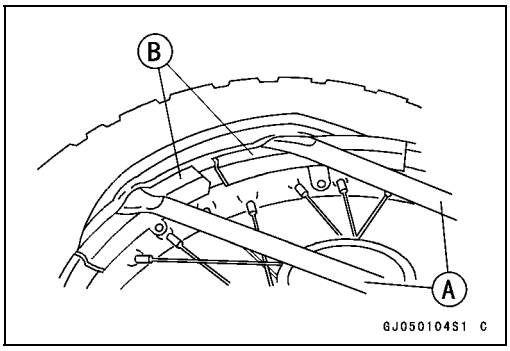

NOTICE
Take care not to insert the tire irons so deeply that the tube gets damaged.

- Remove the tube and bead protector when one side of the tire is pried off.
- Pry the other side of the tire off the rim.

Tire Installation

NOTE

○*The tires should be installed so that the ID serial NO. [A] faces to left side.*

- Inspect the rim and the tire before installing the tire, and replace them if necessary.
- Install the tube band onto the rim.
- Apply a soap and water solution or rubber lubricant to both the tire bead and the rim flange.

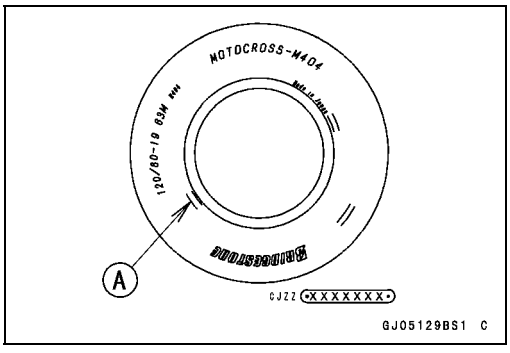

- Position the tire on the rim so that the air valve [A] is at the tire balance mark [B] (the chalk mark made during removal).

○The new tire is no marked.

- Insert the valve stem into the rim, and screw the nut on loosely.
- Fit the rim protectors and use suitable tire irons to install the tire bead.

Special Tool - Rim Protector: 57001-1063

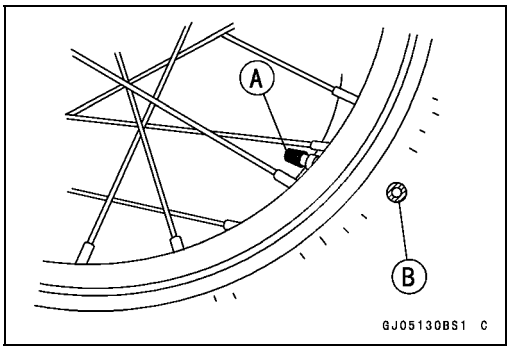

NOTICE
To prevent rim damage, be sure to place the rim protectors at any place the tire irons are applied.

- Install the tire on the rim from the opposite side of the air valve.

○Fit the rim protectors and insert the tire irons so deeply that the tube is not damaged.

- Install the bead protector onto the rim.
- Similarly, slip the tire bead over the rim on the other side.
- Check that the tube is not pinched between the tire and rim.

Tires

- Tighten the bead protector nut [A], air valve nut [B] and air valve cap [C].
- Adjust the tire air pressure to the specified pressure (see Air Pressure Inspection/Adjustment in the Periodic Maintenance chapter).

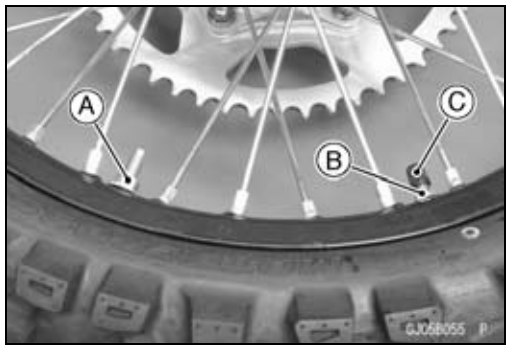

Hub Bearing

Front Hub Bearing Removal

- Remove:
  Front Wheel (see Front Wheel Removal)
  Grease Seals [A]

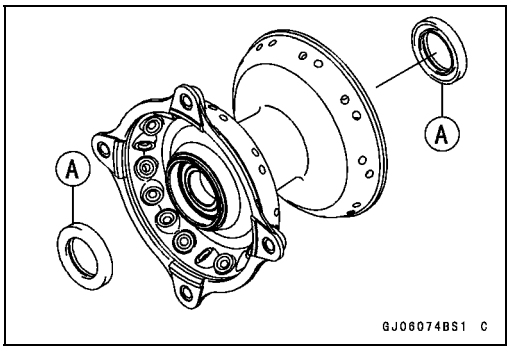

- Use the bearing remover to remove the hub bearings [A].

NOTICE
Do not lay the wheel on the ground with the disc facing down. This can damage or warp the disc. Place wooden blocks under the wheel so that the disc does not touch the ground.

Special Tools - Bearing Remover Head, ϕ20 × ϕ22 [B]: 57001-1293
Bearing Remover Shaft, ϕ13 [C]: 57001-1377

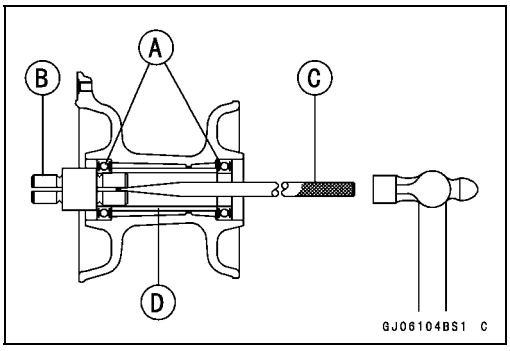

- Remove the collar [D].

Rear Hub Bearing Removal

- Remove
  Rear Wheel (see Rear Wheel Removal)
  Grease Seals [A]
  Circlip [B]

Special Tool - Inside Circlip Pliers: 57001-143

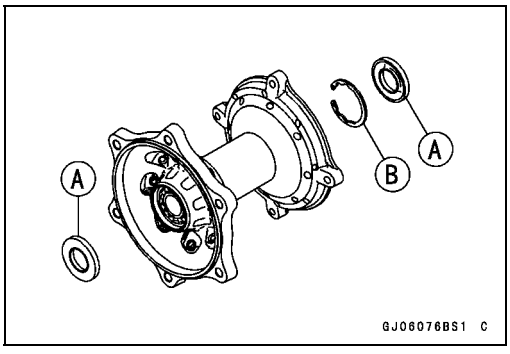

- Use the bearing remover to remove the right hub bearing [A].

NOTICE
Do not lay the wheel on the ground with the disc facing down. This can damage or warp the disc. Place wooden blocks under the wheel so that the disc does not touch the ground.

Special Tools - Bearing Remover Head, ϕ25 × ϕ28 [B]: 57001-1346
Bearing Remover Shaft, ϕ13 [C]: 57001-1377

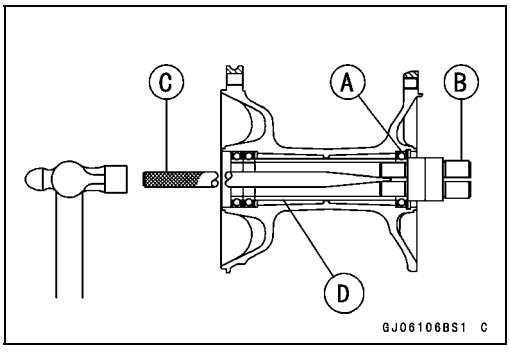

- Remove the collar [D].

Hub Bearing

- Using a suitable bar [A], tap the around of the bearing inner race evenly to remove the bearings [B].

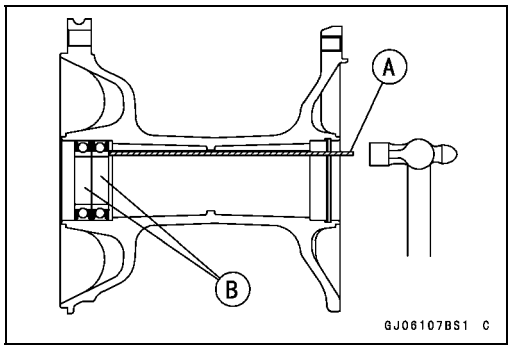

Hub Bearing Installation

- Before installing the hub bearings, blow any dirt or foreign particles out of the hub with compressed air to prevent contamination of the bearings.
- Replace the bearings with new ones.

NOTE

○*Install the bearings so that the marked side or sealed side faces out.*

- Install the front hub bearings in the following sequence.

○Press in the left side bearing [A] until it is bottomed.

Special Tool - Bearing Driver Set: 57001-1129

○Insert the collar [B] in the front hub [C].

○Press in the right side bearing [D] until it is bottomed.

Special Tool - Bearing Driver Set: 57001-1129

- Install the rear hub bearings in the following sequence.

○Press in the right side bearing until it is bottomed.

Special Tool - Bearing Driver Set: 57001-1129

○Insert the collar in the rear hub.

○Press in the left side bearings until it is bottomed.

Special Tool - Bearing Driver Set: 57001-1129

○Replace the circlip with a new one.

Special Tool - Inside Circlip Pliers: 57001-143

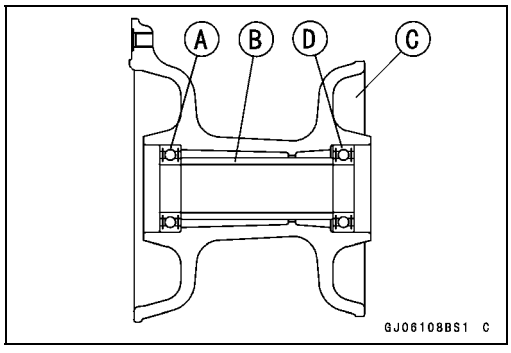

- Replace the grease seal [A] with a new one.
- Press in the grease seal so that the seal surface is flush [B] with the end of the hole.
- Apply high-temperature grease to the grease seal lip.

Special Tool - Bearing Driver Set [C]: 57001-1129

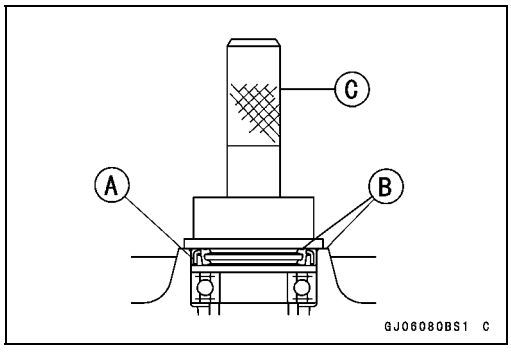

Hub Bearing

Hub Bearing Inspection

Since the hub bearings are made to extremely close tolerances, the clearance can not normally be measured.

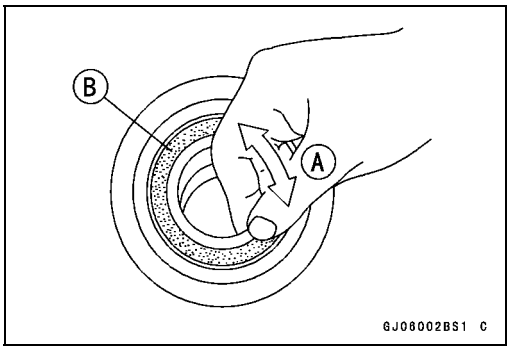

NOTE

○*Do not remove any bearings for inspection. If any bearings are removed, they will need to be replaced with new ones.*

- Turn each bearing in the hub back and forth [A] while checking for plays, roughness, or binding.

★If bearing play roughness, or binding is found, replace the bearing.

- Examine the bearing seal [B] for tears or leakage.

★If the seal is torn or is leaking, replace the bearing.

Hub Bearing Lubrication

NOTE

○*Since the hub bearings are packed with grease and sealed, lubrication is not required.*

Final Drive

Table of Contents

Exploded View 11-2
Specifications 11-4
Drive Chain 11-5
- Drive Chain Slack Inspection 11-5
- Drive Chain Slack Adjustment 11-5
- Wheel Alignment Inspection 11-5
- Wheel Alignment Adjustment 11-5
- Drive Chain Wear Inspection 11-5
- Drive Chain Lubrication 11-5
- Drive Chain Removal 11-5
- Drive Chain Installation 11-5

Sprockets 11-7
- Engine Sprocket Removal 11-7
- Engine Sprocket Installation 11-7
- Rear Sprocket Removal 11-7
- Rear Sprocket Installation 11-8
- Sprocket Wear Inspection 11-8
- Rear Sprocket Warp (Runout) Inspection 11-8

Exploded View

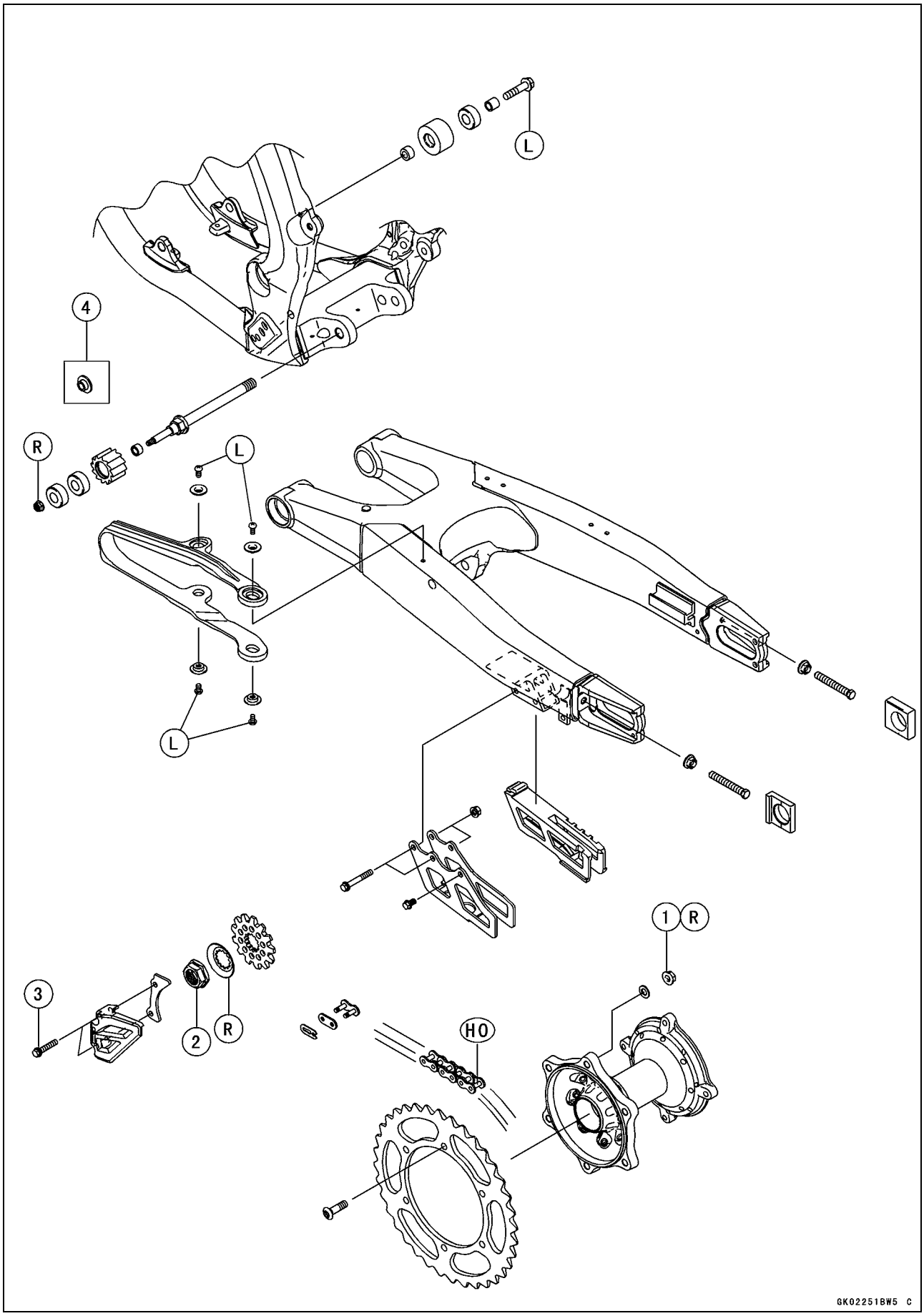

Exploded View

No.	Fastener	Torque			Remarks
		N·m	kgf·m	ft·lb	
1	Rear Sprocket Nuts	34	3.5	25	R
2	Engine Sprocket Nut	70	7.1	52	
3	Engine Sprocket Cover Bolts	9.8	1.0	87 in·lb	

4. KX450FC
HO: Apply heavy oil.
L: Apply a non-permanent locking agent.
R: Replacement Parts

Specifications

Item	Standard	Service Limit
Drive Chain		
Chain Slack	52 ~ 58 mm (2.0 ~ 2.3 in.)	– – –
Chain 20-link Length	317.5 ~ 318.2 mm (12.50 ~ 12.53 in.)	323 mm (12.7 in.)
Standard Chain:		
Make	DAIDO	– – –
Type	DID 520DMA4	– – –
Link	114 Links	– – –
Sprocket		
Rear Sprocket Warp	TIR 0.4 mm (0.016 in.) or less	TIR 0.5 mm (0.020 in.)

Drive Chain

Drive Chain Slack Inspection

- Refer to the Drive Chain Slack Inspection in the Periodic Maintenance chapter.

Drive Chain Slack Adjustment

- Refer to the Drive Chain Slack Adjustment in the Periodic Maintenance chapter.

Wheel Alignment Inspection

- Check that the notch [A] of the chain adjuster aligns with the same swingarm mark [B] as the other side one.

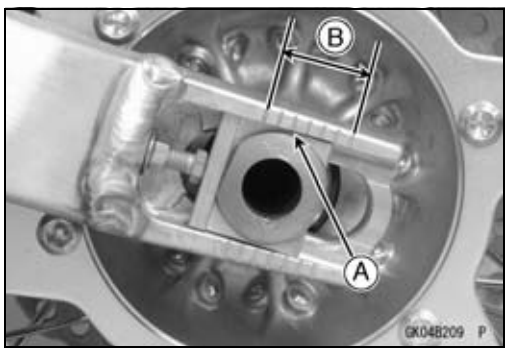

⚠ WARNING

Misalignment of the wheel will result in abnormal wear and may result in an unsafe riding condition. Be sure the wheel is properly aligned.

Wheel Alignment Adjustment

- This procedure is the same as Drive Chain Slack Adjustment (see Drive Chain Slack Adjustment in the Periodic Maintenance chapter).

Drive Chain Wear Inspection

- Refer to the Drive Chain Wear Inspection in the Periodic Maintenance chapter.

Drive Chain Lubrication

- Refer to the Drive Chain Lubrication in the Periodic Maintenance chapter.

Drive Chain Removal

- Remove the engine sprocket cover (see Engine Sprocket Removal).
- Remove the clip [A] from the master link with pliers.
- Remove:
  Link Plate
  Master Link
  Drive Chain

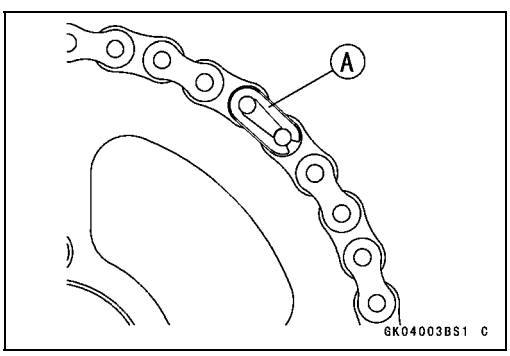

Drive Chain Installation

- Fit the drive chain onto the sprockets.

○Place the drive chain ends on the rear sprocket as shown in the figure.

- Install the master link [A] from the wheel side.

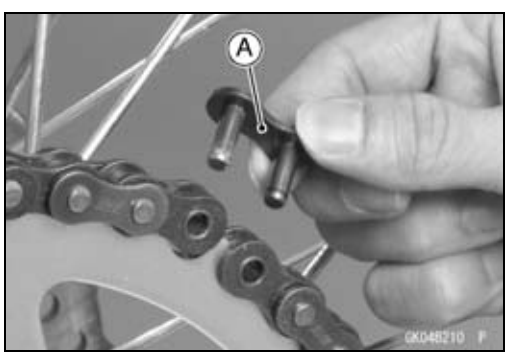

Drive Chain

- Install the link plate [A] so that the mark faces out.
- Install the clip [B] so that the closed end [C] of the “U” pointed in the direction of chain rotation [D].
- Adjust the drive chain slack (see Drive Chain Slack Adjustment in the Periodic Maintenance chapter).

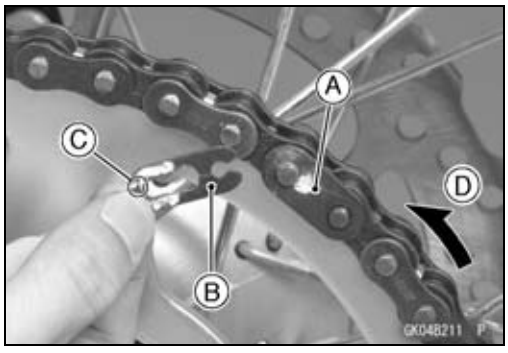

Sprockets

Engine Sprocket Removal

- Remove:
  Engine Sprocket Cover Bolts [A]
  Engine Sprocket Cover [B]
  Drive Chain Guide [C]

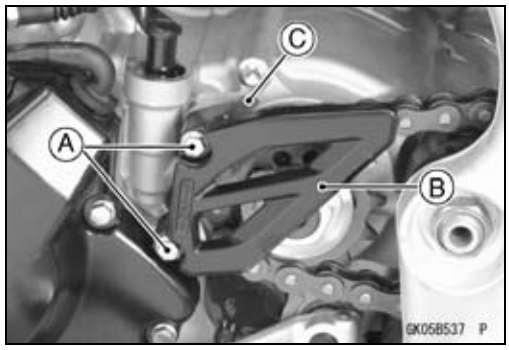

- Flatten the bended sprocket washer [A].
- Remove:
  Engine Sprocket Nut [B]
  Washer
- Remove the engine sprocket [C] from the drive chain [D].

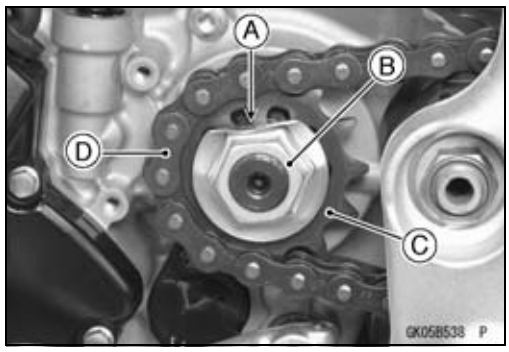

Engine Sprocket Installation

- Install the engine sprocket so that the stepped side [A] faces inside.
- Replace the sprocket washer with a new one.
- Install the sprocket washer and sprocket nut.

  Torque - Engine Sprocket Nut: 70 N·m (7.1 kgf·m, 52 ft·lb)
- Bend the one side of the sprocket washer on the nut.
- Install the drive chain guide and engine sprocket cover.

  Torque - Engine Sprocket Cover Bolts : 9.8 N·m (1.0 kgf·m, 87 in·lb)

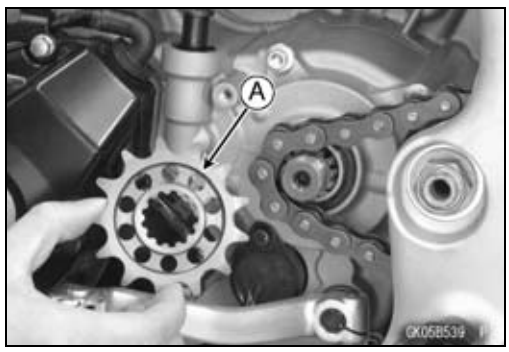

Rear Sprocket Removal

- Remove the rear wheel (see Rear Wheel Removal in the Wheels/Tires chapter).

NOTICE
Do not lay the wheel on the ground with the disc facing down. This can damage or warp the disc. Place blocks under the wheel so that the disc does not touch the ground.

- Remove:
  Rear Sprocket Bolts [A] and Nuts
  Washers
  Rear Sprocket [B]

Sprockets

Rear Sprocket Installation

- Replace the rear sprocket nuts with new ones.
- Install the rear sprocket [A] so that the marked side [B] faces out.
- Install the rear sprocket bolts and washers.
- Tighten:

  Torque - Rear Sprocket Nuts: 34 N·m (3.5 kgf·m, 25 ft·lb)

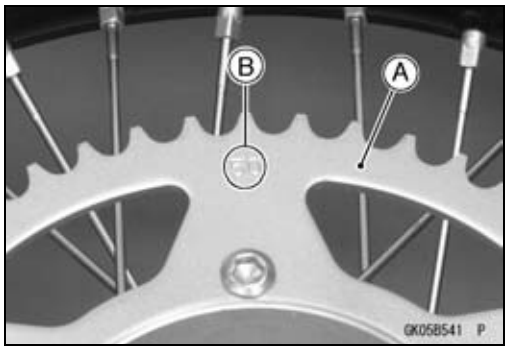

Sprocket Wear Inspection

- Refer to the Sprocket Wear Inspection in the Periodic Maintenance chapter.

Rear Sprocket Warp (Runout) Inspection

- Refer to the Rear Sprocket Warp (Runout) Inspection in the Periodic Maintenance chapter.

Brakes

Table of Contents

Exploded View 12-2
Specifications 12-6
Special Tools 12-7
Brake Lever, Brake Pedal 12-8
- Brake Lever Play Adjustment 12-8
- Brake Pedal Position Adjustment 12-8
- Brake Pedal Removal 12-8
- Brake Pedal Installation 12-8

Brake Fluid 12-10
- Brake Fluid Level Inspection 12-10
- Brake Fluid Change 12-10
- Brake Line Bleeding 12-11

Caliper 12-13
- Caliper Removal 12-13
- Caliper Installation 12-14
- Caliper Disassembly 12-14
- Fluid Seal Damage Inspection 12-15
- Dust Seal Damage Inspection 12-15
- Caliper Dust Boot and Friction Boot Damage Inspection 12-15
- Caliper Piston and Cylinder Damage Inspection 12-16
- Caliper Holder Shaft Wear Inspection 12-16

Brake Pad 12-17
- Brake Pad Removal 12-17
- Brake Pad Installation 12-18
- Brake Pad Inspection 12-18

Master Cylinder 12-19
- Front Master Cylinder Removal 12-19
- Front Master Cylinder Installation 12-19
- Rear Master Cylinder Removal 12-21
- Rear Master Cylinder Installation 12-21
- Front Master Cylinder Disassembly 12-22
- Rear Master Cylinder Disassembly 12-22
- Master Cylinder Assembly 12-22
- Master Cylinder Inspection (Visual Inspection) 12-22

Brake Disk 12-23
- Brake Disc Removal 12-23
- Brake Disc Installation 12-23
- Brake Disc Inspection 12-23

Brake Hose 12-24
- Brake Hose Removal/Installation 12-24
- Brake Hose Inspection 12-24

Exploded View

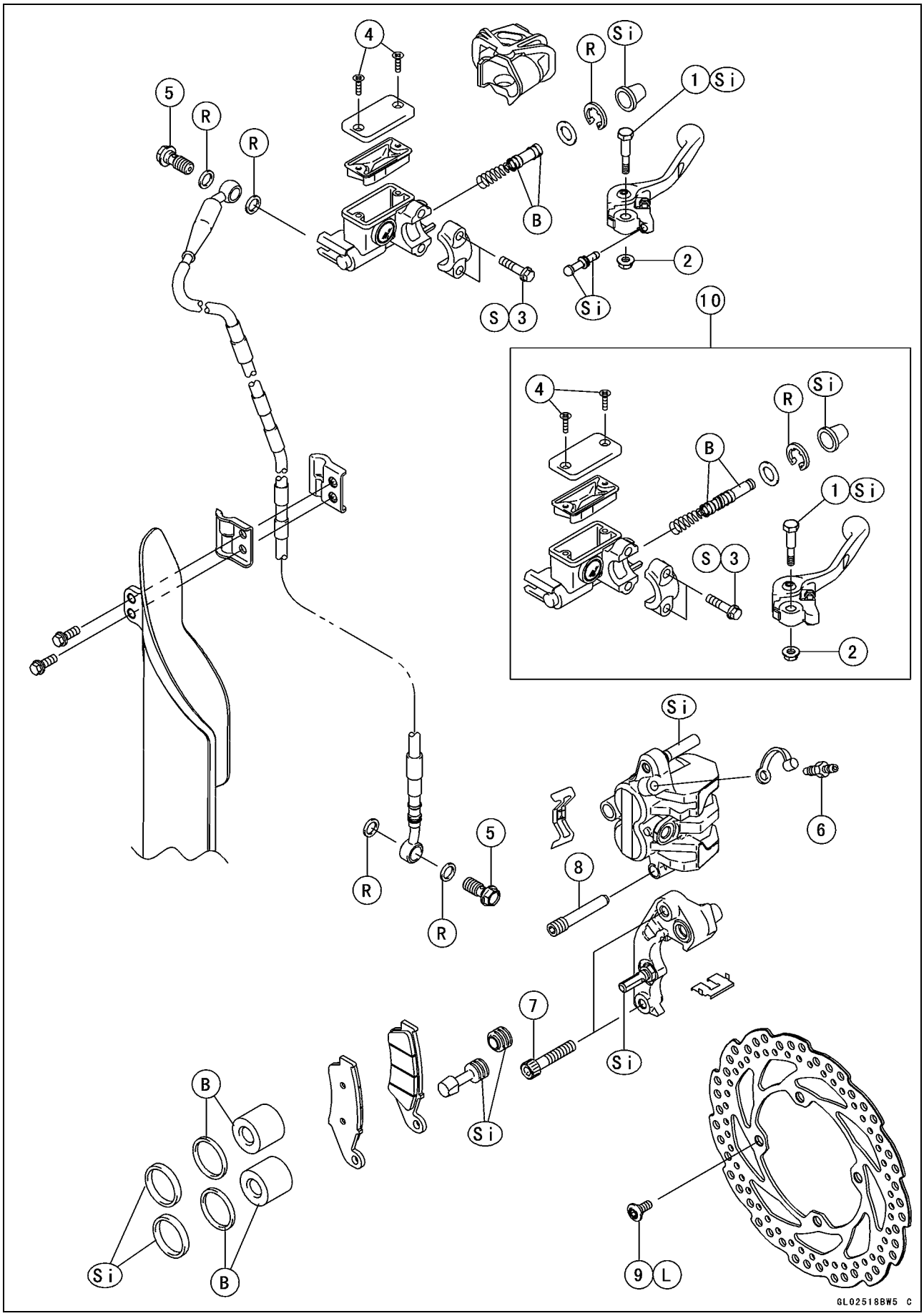

Exploded View

No.	Fastener	Torque			Remarks
		N·m	kgf·m	ft·lb	
1	Brake Lever Pivot Bolt	5.9	0.60	52 in·lb	Si
2	Brake Lever Pivot Bolt Locknut	5.9	0.60	52 in·lb	
3	Front Master Cylinder Clamp Bolts	8.8	0.90	78 in·lb	S
4	Brake Reservoir Cap Screws	1.5	0.15	13 in·lb	
5	Brake Hose Banjo Bolts	25	2.5	18	
6	Caliper Bleed Valve	7.8	0.80	69 in·lb	
7	Front Caliper Mounting Bolts	25	2.5	18	
8	Brake Pad Pin	17	1.7	13	
9	Front Brake Disc Mounting Bolts	9.8	1.0	87 in·lb	L

10. KX450FC
B: Apply brake fluid.
L: Apply a non-permanent locking agent.
R: Replacement Parts
S: Follow the specified tightening sequence.
Si: Apply silicone grease (ex. PBC grease).

Exploded View

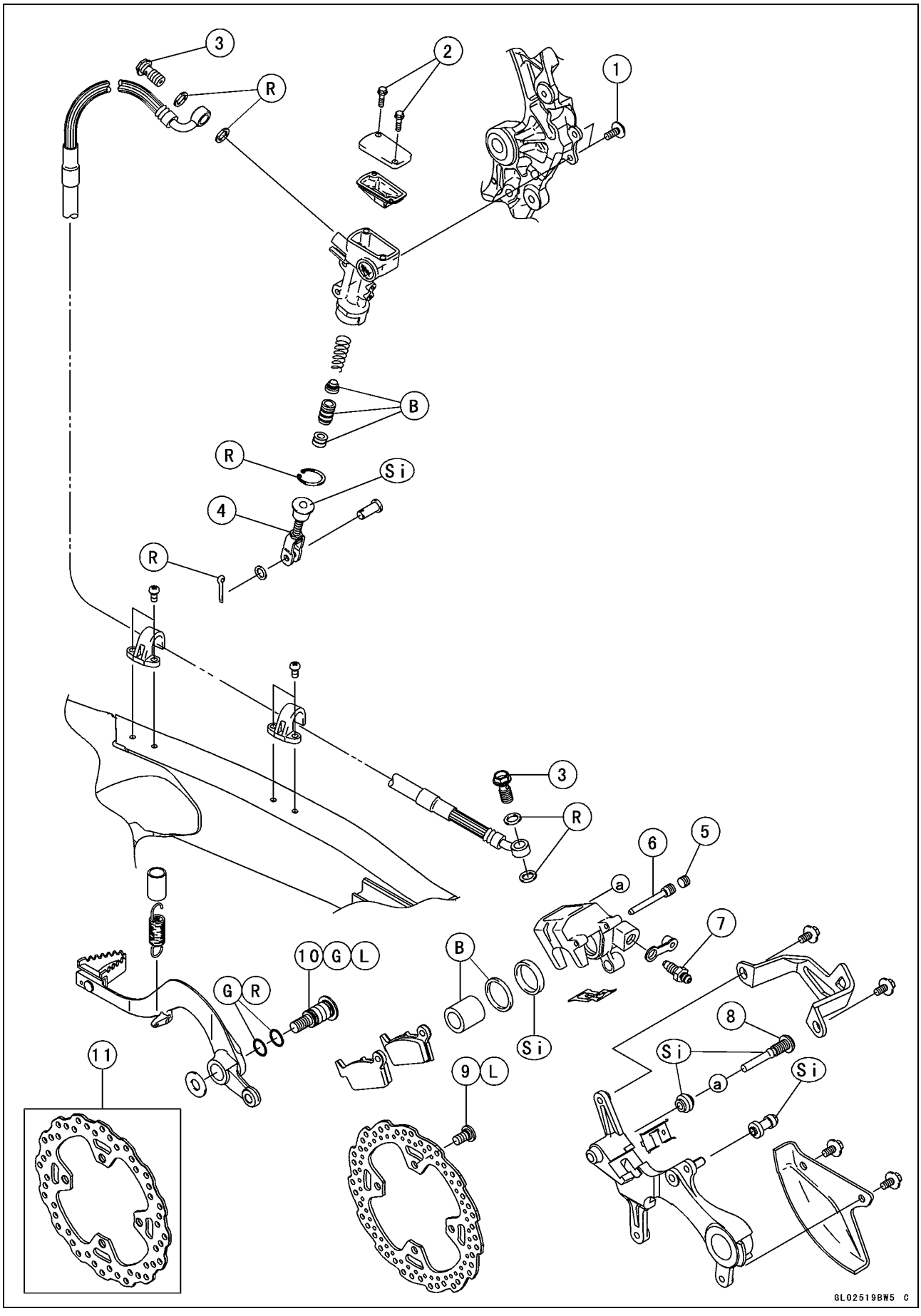

Exploded View

No.	Fastener	Torque			Remarks
		N·m	kgf·m	ft·lb	
1	Rear Master Cylinder Mounting Bolts	9.8	1.0	87 in·lb	
2	Brake Reservoir Cap Screws	1.5	0.15	13 in·lb	
3	Brake Hose Banjo Bolts	25	2.5	18	
4	Rear Master Cylinder Push Rod Locknut	17	1.7	13	
5	Brake Pad Pin Plug	2.5	0.25	22 in·lb	
6	Brake Pad Pin	17	1.7	13	
7	Caliper Bleed Valve	7.8	0.80	69 in·lb	
8	Rear Caliper Holder Shaft	27	2.8	20	Si
9	Rear Brake Disc Mounting Bolts	23	2.3	17	L
10	Brake Pedal Bolt	25	2.5	18	L, G

11. KX450FC
B: Apply brake fluid.
G: Apply grease.
L: Apply a non-permanent locking agent.
R: Replacement Parts
Si: Apply silicone grease (ex. PBC grease).

Specifications

Item	Standard	Service Limit
Brake Lever		
Lever Free Play	Adjustable (to suit rider)	– – –
Brake Fluid		
Grade:		
Front	DOT3 or DOT4	– – –
Rear	DOT3 or DOT4	– – –
Brake Pads		
Lining Thickness:		
Front	4.0 mm (0.16 in.)	1 mm (0.04 in.)
Rear	6.4 mm (0.25 in.)	1 mm (0.04 in.)
Brake Discs		
Thickness:		
Front	2.85 ~ 3.15 mm (0.112 ~ 0.124 in.)	2.5 mm (0.10 in.)
Rear	3.85 ~ 4.15 mm (0.152 ~ 0.163 in.)	3.5 mm (0.14 in.)
Runout	TIR 0.25 mm (0.010 in.) or less	TIR 0.3 mm (0.01 in.)

Special Tools

Jack:
57001-1238

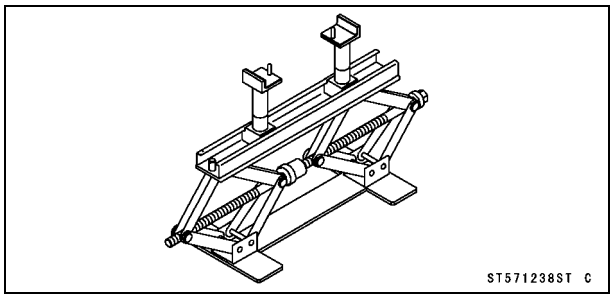

Jack Attachment:
57001-1608

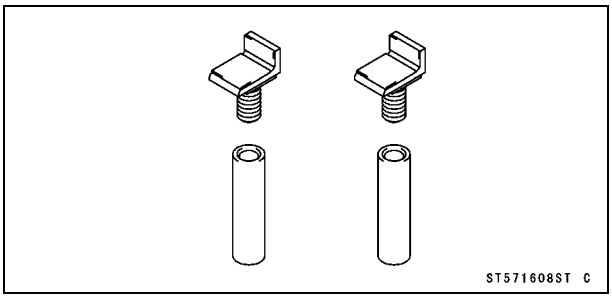

Brake Lever, Brake Pedal

Brake Lever Play Adjustment

- Refer to the Brake Lever and Pedal Adjustment in the Periodic Maintenance chapter.

Brake Pedal Position Adjustment

- Refer to the Brake Lever and Pedal Adjustment in the Periodic Maintenance chapter.

Brake Pedal Removal

- Remove:
  Cotter Pin [A]
  Joint Pin [B]
  Washer [C]

NOTE

○*Pull off the joint pin while pressing down the brake pedal.*

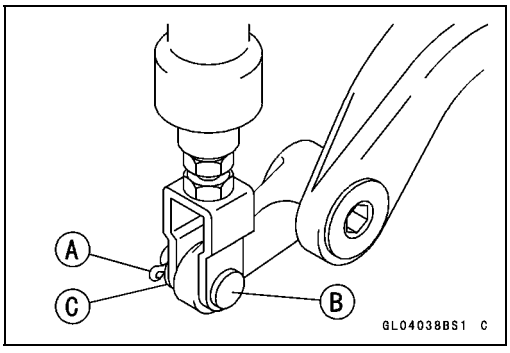

- Remove:
  Brake Pedal Bolt [A]
  Brake Pedal Return Spring [B]
  Brake Pedal [C] and Washer

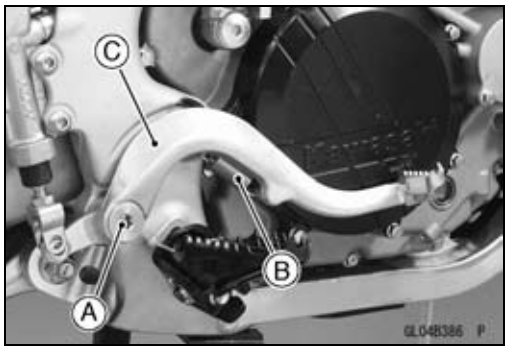

Brake Pedal Installation

- Install the return spring [A] as shown in the figure.

- Replace the O-rings [A] with new ones.
- Apply grease to the O-rings and shaft portion [B] of the brake pedal bolt.
- Apply a non-premanent locking agent to the thread of the brake pedal bolt.
- Install the brake pedal [C].

○Install the washer [D] inside the pedal.

- Tighten:

Torque - Brake Pedal Bolt: 25 N·m (2.5 kgf·m, 18 ft·lb)

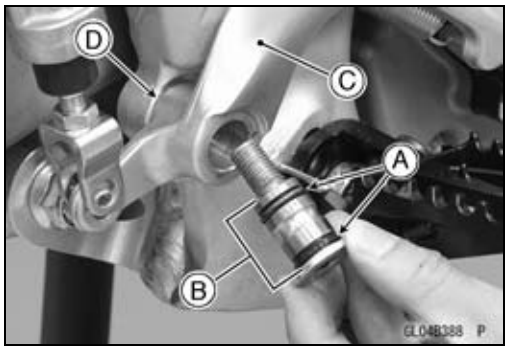

Brake Lever, Brake Pedal

- Replace the cotter pin with a new one.
- Install the joint pin, washer and new cotter pin.

○Bend the ends [A] of the cotter pin as shown in the figure.

- Check the brake pedal position (see Brake Lever and Pedal Adjustment in the Periodic Maintenance chapter).

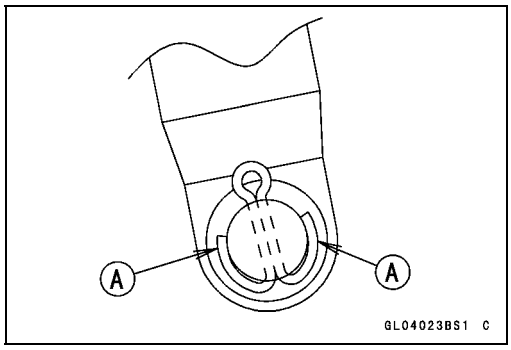

Brake Fluid

⚠ WARNING

When working with the disc brake, observe the precautions listed below.
●Never reuse old brake fluid.
●Do not use fluid from a container that has been left unsealed or that has been open for a long time.
●Do not mix two types and brands of fluid for use in the brake. This lowers the brake fluid boiling point and could cause the brake to be ineffective. It may also cause the rubber brake parts to deteriorate.
●Don't leave the reservoir cap off for any length of time to avoid moisture contamination of the fluid.
●Don't change the fluid in the rain or when a strong wind is blowing.
●Except for the disc pads and disc, use only disc brake fluid, isopropyl alcohol, or ethyl alcohol for cleaning of the brake parts. Do not use any other fluid for cleaning these parts. Gasoline, engine oil, or any other petroleum distillate will cause deterioration of the rubber parts. Oil spilled on any part will be difficult to wash off completely and will eventually deteriorate the rubber used in the disc brake.
●When handling the disc pads or disc, be careful that no disc brake fluid or any oil gets on them. Clean off any fluid or oil that inadvertently gets on the pads or disc with a high flash-point solvent. Do not use one which will leave an oily residue. Replace the pads with new ones if they cannot be cleaned satisfactorily.
●Brake fluid quickly ruins painted surfaces; any spilled fluid should be completely wiped up immediately.
●If any of the brake line fittings or the bleed valve is opened at any time, the AIR MUST BE BLED FROM THE BRAKE LINE.

Brake Fluid Level Inspection

- Refer to the Brake Fluid Level Inspection in the Periodic Maintenance chapter.

Brake Fluid Change

- Refer to the Brake Fluid Change in the Periodic Maintenance chapter.

Brake Fluid

Brake Line Bleeding

The brake fluid has a very low compression coefficient so that almost all the movement of the brake lever or pedal is transmitted directly to the caliper for braking action. Air, however, is easily compressed. When air enters the brake lines, brake lever or pedal movement will be partially used in compressing the air. This will make the lever or pedal feel spongy, and there will be a loss in braking power.

⚠ WARNING

Air in the brake lines diminish braking performance and can cause an accident resulting in injury or death. If the brake lever has a soft or "spongy" feeling mushy when it is applied, there might be air in the brake lines or the brake may be defective. Do not operate the vehicle and service the brake system immediately.

NOTE

○*The procedure to bleed the front brake line is as follows. Bleeding the rear brake line is the same as for the front brake.*

- Level the brake fluid reservoir.
- Remove:
  Screws [A]
  Reservoir Cap [B]
  Diaphragm
- Check that there is plenty of fluid in the reservoir.
- Slowly pump the brake lever several times until no air bubbles rise up from the bottom of the reservoir.

○Bleed the air completely from the master cylinder by this operation.

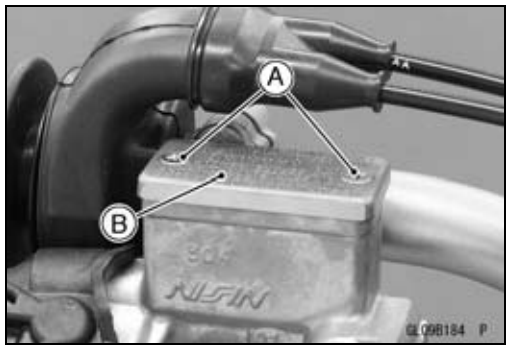

- Remove the rubber cap [A] from the bleed valve on the caliper.
- Attach a clear plastic hose [B] to the bleed valve on the caliper, and run the other end of the hose into a container.

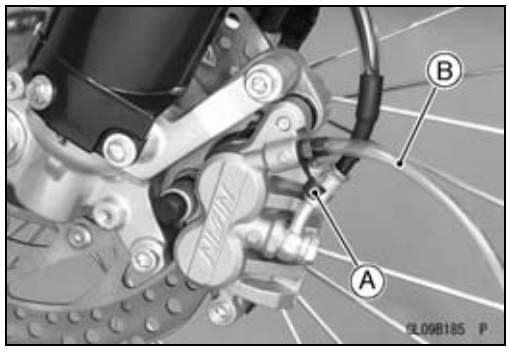

Brake Fluid

- Bleed the brake line and caliper as follows:

○Repeat this operation until no more air can be seen coming out into the clear plastic hose.

1. Pump the brake lever until it becomes hard, and apply the brake and hold it [A].
2. Quickly open and close [B] the bleed valve while holding the brake applied.
3. Release the brake [C].

NOTE

○*The fluid level must be checked often during the bleeding operation and replenished with fresh brake fluid as necessary. If the fluid in the reservoir runs almost out any time during bleeding operation, the bleeding operation must be done over again from the beginning since air will have entered the line.*

○*Tap the brake hose lightly from the caliper to the reservoir for easier bleeding.*

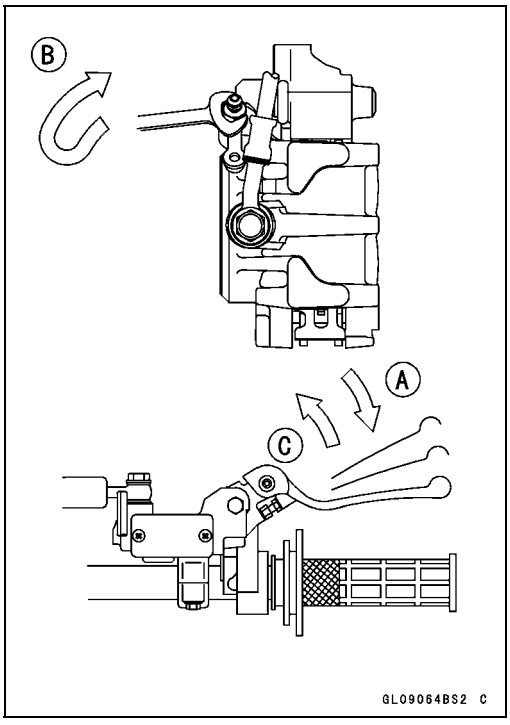

- Remove the clear plastic hose.
- Tighten the bleed valve, and install the rubber cap.

Torque - Caliper Bleed Valve: 7.8 N·m (0.80 kgf·m, 69 in·lb)

- Check the fluid level (see Brake Fluid Level Inspection in the Periodic Maintenance chapter).
- Install the diaphragm and reservoir cap.
- Tighten:

Torque - Brake Reservoir Cap Screws: 1.5 N·m (0.15 kgf·m, 13 in·lb)

- After bleeding is done, check the brake for good braking power, no brake drag, and no fluid leakage.

⚠ WARNING

After servicing, it takes several applications of the brake lever before the brake pads contact the disc, which could result in increased stopping distance and cause an accident resulting in injury or death. Do not attempt to ride the motorcycle until a firm brake lever is obtained by pumping the lever until the pads are against the disc.

Caliper

Caliper Removal

Front Brake

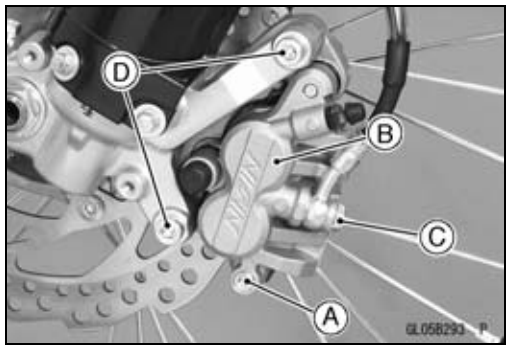

- Loosen the brake pad pin [A] before the caliper [B] removal if the caliper is to be disassembled.
- Loosen the banjo bolt [C] so as not to spill brake fluid.

NOTE

○*If the caliper is to be disassembled after removal and compressed air is not available, disassemble the caliper before brake hose removal (see Brake Caliper Fluid Seal and Dust Seal Replacement in the Periodic Maintenance chapter).*

- Remove:
  Caliper Mounting Bolts [D]
  Banjo Bolt
  Caliper

NOTICE
Immediately wipe up any brake fluid that is spilled.

Rear Brake

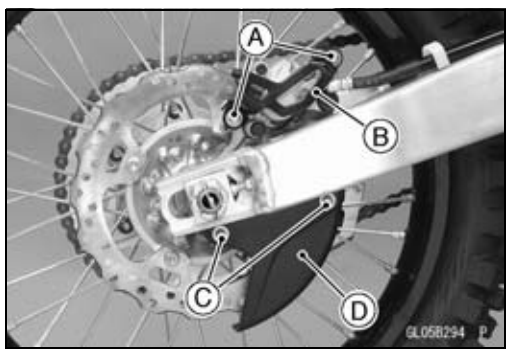

- Remove:
  Caliper Guard Bolts [A]
  Caliper Guard [B]
  Disc Guard Bolts [C]
  Disc Guard [D]

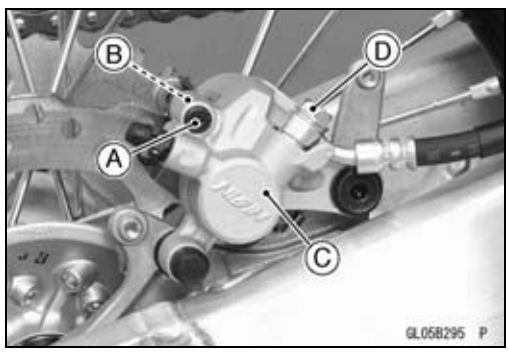

- Remove the pad pin plug [A] and loosen the pad pin [B] if the caliper [C] is to be disassembled.
- Loosen the banjo bolt [D] so as not to spill brake fluid.

NOTE

○*If the caliper is to be disassembled after removal and compressed air is not available, disassemble the caliper before brake hose removal (see Brake Caliper Fluid Seal and Dust Seal Replacement in the Periodic Maintenance chapter).*

- Remove:
  Rear Wheel (see Rear Wheel Removal in the Wheels/Tires chapter)
  Banjo Bolt
  Caliper

NOTICE
Immediately wipe up any brake fluid that is spilled.

Caliper

Caliper Installation

- Install the brake pad if it was removed (see Brake Pad Installation).

Front Brake

- Install the caliper and tighten the bolts.

Torque - Front Caliper Mounting Bolts: 25 N·m (2.5 kgf·m, 18 ft·lb)

Rear Brake

- Install the rear wheel and caliper (see Rear Wheel Installation in the Wheels/Tires chapter).

- Install the brake hose lower end.

○Replace the washers [A] on each side of hose fitting [B] with new ones.

- Tighten:

Torque - Brake Hose Banjo Bolt: 25 N·m (2.5 kgf·m, 18 ft·lb)

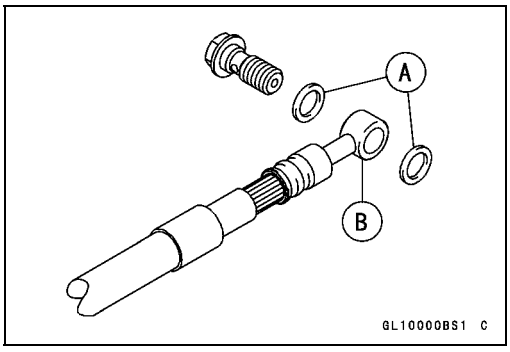

- Install the removed parts (see appropriate chapters).
- Bleed the brake line (see Brake Line Bleeding).
- Check the brake for good braking power, no brake drag, and no fluid leakage.

⚠ WARNING

After servicing, it takes several applications of the brake lever or pedal before the brake pads contact the disc, which could result in increased stopping distance and cause an accident resulting in injury or death. Do not attempt to ride the motorcycle until a firm brake lever or pedal is obtained by pumping the lever or pedal until the pads are against the disc.

Caliper Disassembly

- Refer to the Brake Caliper Fluid Seal and Dust Seal Replacement in the Periodic Maintenance chapter.

Caliper

Fluid Seal Damage Inspection

The fluid seal(s) [A] around the piston maintains the proper pad/disc clearance. If this seal is not in good condition, pad wear will increase, and constant pad drag on the disc will raise brake and brake fluid temperature.

- Replace the fluid seals under any of the following conditions.

○Fluid leakage around the pad
○Brakes overheat
○There is a large difference in left and right pad wear.
○The seal is stuck to the piston.

★If the fluid seal(s) is replaced, replace the dust seal(s) [B] as well. Also, replace all seals every other time the pads are changed.
Front Caliper [C]
Rear Caliper [D]

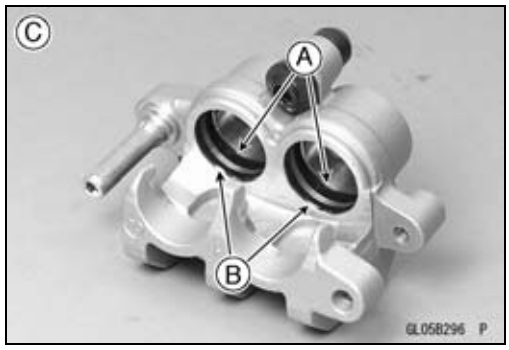

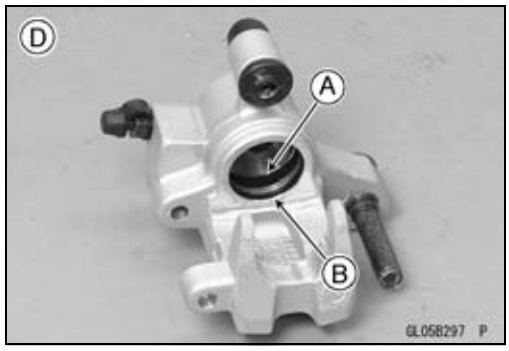

Dust Seal Damage Inspection

- Check that the dust seals are not cracked, worn, swollen, or otherwise damaged.

★If they show any damage, replace them.

Caliper Dust Boot and Friction Boot Damage Inspection

- Check that the dust boot [A] and friction boot [B] are not cracked, worn, swollen, or other wise damaged.

★If they show any damage, replace it.
Front Caliper [C]
Rear Caliper [D]

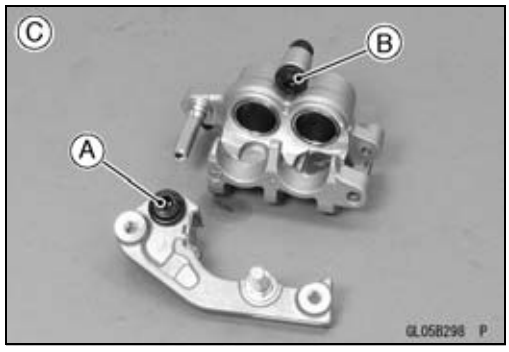

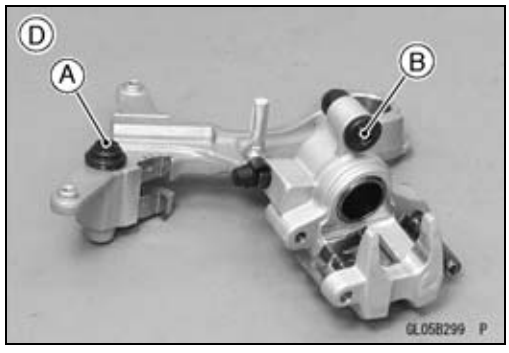

Caliper

Caliper Piston and Cylinder Damage Inspection

- Visually inspect the piston(s) [A] and cylinder surfaces.

★Replace the caliper if the cylinder and piston are badly scores or rusty.

Front Caliper [B]
Rear Caliper [C]

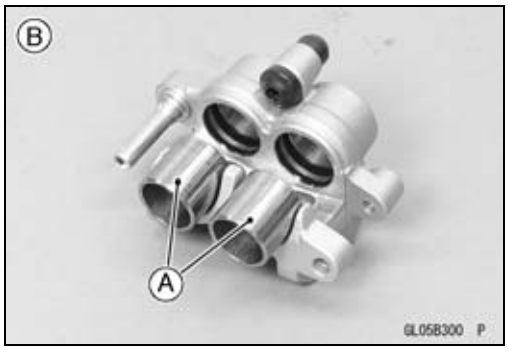

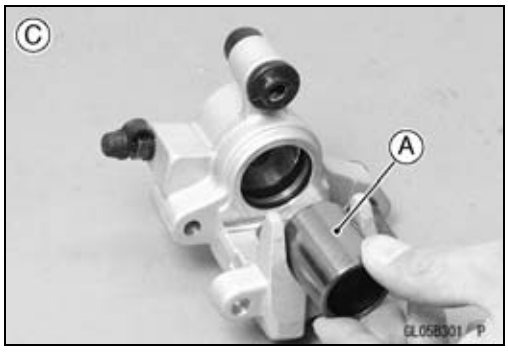

Caliper Holder Shaft Wear Inspection

The caliper body must slide smoothly on the caliper holder shafts [A]. If the body does not slide smoothly, one pad will wear more than the other, pad wear will increase, and constant drag on the disc will raise brake and brake fluid temperature.

- Check to see that the caliper holder shafts are not badly worn or stepped, and that the friction boots are not damaged.

★If the friction boot is damaged, replace the friction boot. To replace the friction boot, remove the pads and caliper bracket.

★If the caliper holder shaft is damage, replace the caliper assembly (front caliper), caliper bracket or holder shaft (rear caliper).

Torque - Rear Caliper Holder Shaft: 27 N·m (2.8 kgf·m, 20 ft·lb)

Front Caliper [B]
Rear Caliper [C]

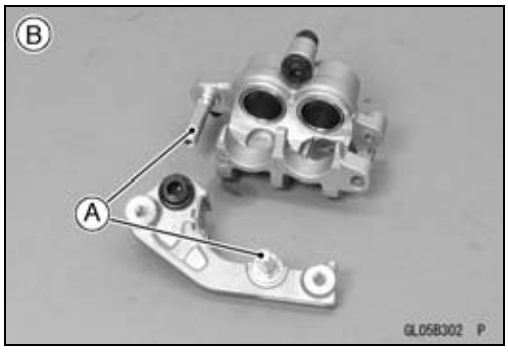

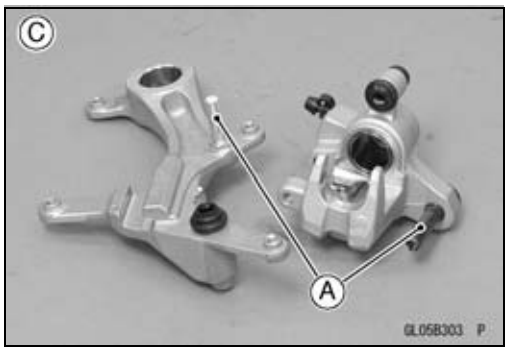

Brake Pad

Brake Pad Removal

Front Brake

- Loosen the pad pin [A].
- Remove the bolts [B].
- Remove the caliper with the hose installed.

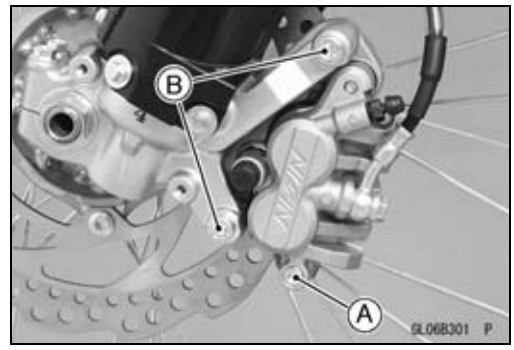

- Remove:
  Pad Pin [A]
  Brake Pads [B]

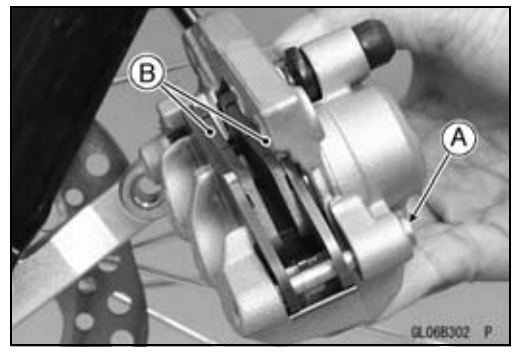

Rear Brake

- Remove:
  Pad Pin Plug [A]

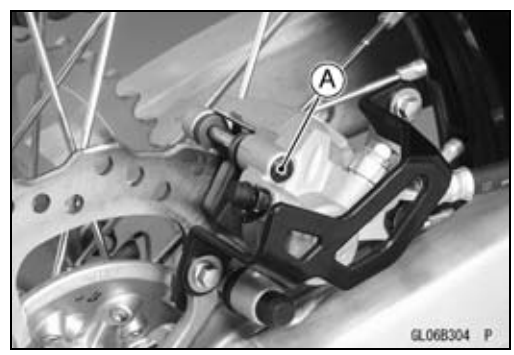

- Remove the pad pin [A].
- Remove the piston side pad [B].
- Push the caliper holder toward the piston, and then remove another pad [C].

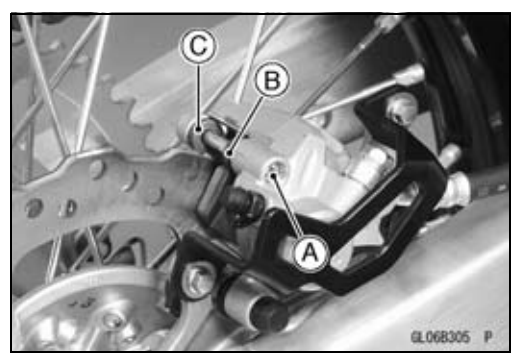

Brake Pad

Brake Pad Installation

- Push the caliper piston(s) in by hand as far as they will go.
- Install the piston side pad first, and then another pad.

○Fit the pad end into the groove [A] of the anti-rattle spring securely.
  Front Brake [B]
  Rear Brake [C]

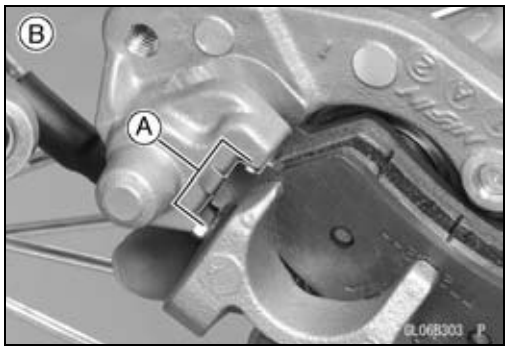

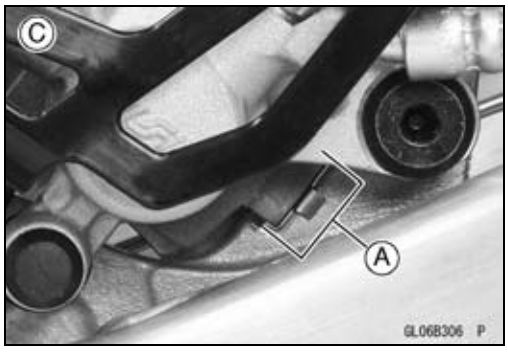

- Install the front caliper and tighten the bolts.

  Torque - Front Caliper Mounting Bolts: 25 N·m (2.5 kgf·m, 18 ft·lb)

- Tighten the brake pad pin.

  Torque - Brake Pad Pin: 17 N·m (1.7 kgf·m, 13 ft·lb)
  Rear Brake Pad Pin Plug: 2.5 N·m (0.25 kgf·m, 22 in·lb)

- Check the brake for good braking power, no brake drag, and no fluid leakage.

⚠ WARNING

After servicing, it takes several applications of the brake lever or pedal before the brake pads contact the disc, which could result in increased stopping distance and cause an accident resulting in injury or death. Do not attempt to ride the motorcycle until a firm brake lever or pedal is obtained by pumping the lever or pedal until the pads are against the disc.

Brake Pad Inspection

- Refer to the Brake Pad Wear Inspection in the Periodic Maintenance chapter.

Master Cylinder

NOTICE
Brake fluid quickly ruins painted or plastic surfaces; any spilled fluid should be completely washed up immediately.

Front Master Cylinder Removal

- Remove the banjo bolt [A] to disconnect the brake hose upper end [B] from the master cylinder [C].

○When removing the brake hose, temporarily secure the end of the brake hose to some high place to keep fluid loss to a minimum.

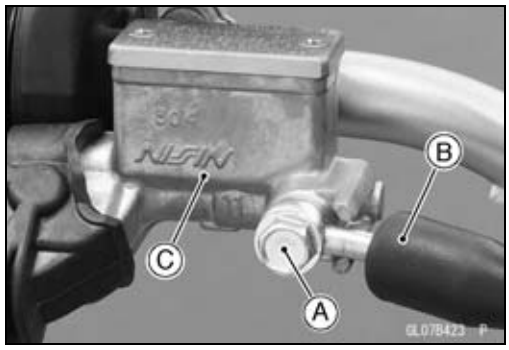

- Remove the clamp bolts [A], and take off the master cylinder [B] as an assembly with the brake lever.

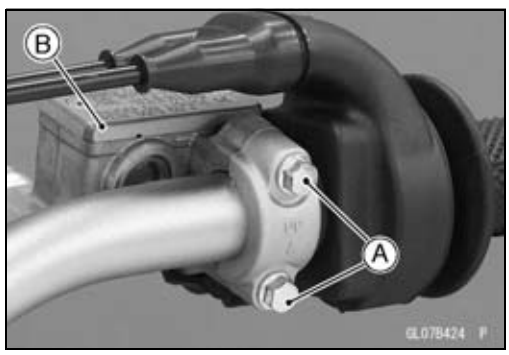

Front Master Cylinder Installation

KX450FC

- Install the master cylinder [A] position as shown in the figure.
  185 mm (7.28 in.) [B]
  Horizontal Line of Frame [C]
  Handlebar [D]
  Horizontal Line of Cap Surface [E]

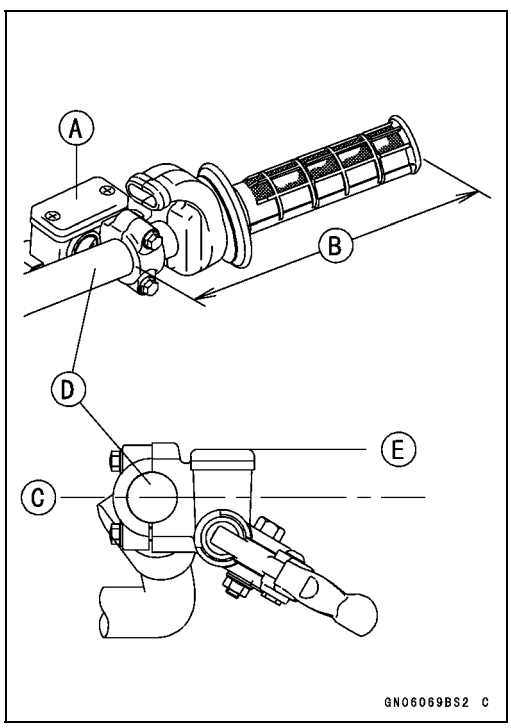

Master Cylinder

KX450FD ~

- Install the master cylinder [A].
  176.95 mm (6.967 in.) [B]
  Horizontal Line of Frame [C]
  Handlebars [D]
  Horizontal Line of Cap Surface [E]

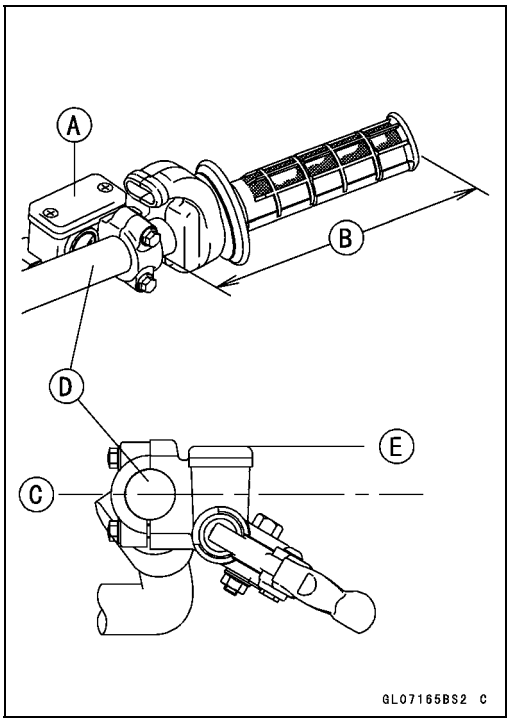

- The master cylinder clamp must be installed with the arrow mark [A] upward.
- Tighten the upper clamp bolt [B] first, and then the lower clamp bolt [C].

○There will be a gap at the lower mating surface of the clamp after tightening.

Torque - Front Master Cylinder Clamp Bolts: 8.8 N·m (0.90 kgf·m, 78 in·lb)

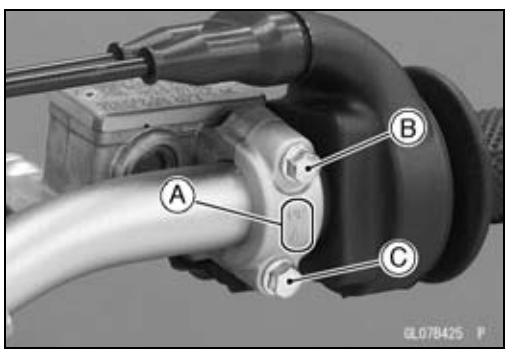

- Install the brake hose.

○Replace the washers [A] on each side of hose fitting [B] with new ones.

- Tighten:

Torque - Brake Hose Banjo Bolt: 25 N·m (2.5 kgf·m, 18 ft·lb)

- Bleed the brake line (see Brake Line Bleeding).
- Check the brake for good braking power, no brake drag, and no fluid leakage.

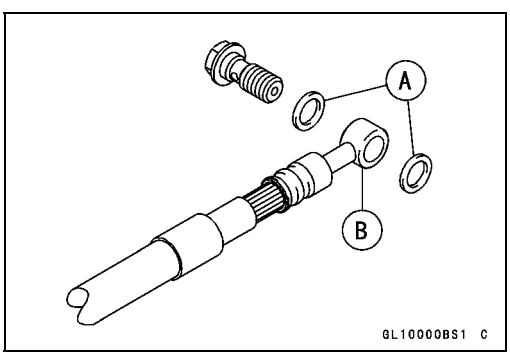

⚠ WARNING

After servicing, it takes several applications of the brake lever before the brake pads contact the disc, which could result in increased stopping distance and cause an accident resulting in injury or death. Do not attempt to ride the motorcycle until a firm brake lever is obtained by pumping the lever until the pads are against the disc.

Master Cylinder

Rear Master Cylinder Removal

- Remove:
  Cotter Pin [A]
  Joint Pin [B]
  Washer [C]

NOTE

○*Pull off the joint pin while pressing down the brake pedal.*

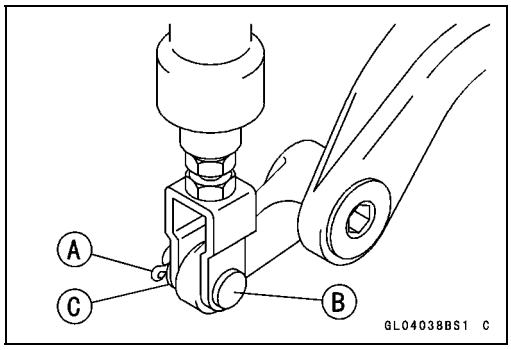

- Remove the master cylinder mounting bolts [A], and remove the master cylinder [B] backward.
- Remove the brake hose banjo bolt [C].

○When removing the brake hose, temporarily secure the end of the brake hose to some high place to keep fluid loss to a minimum.

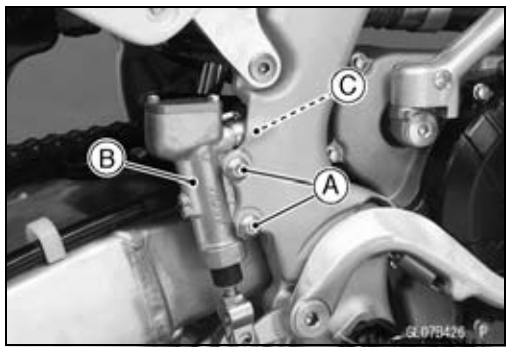

Rear Master Cylinder Installation

- Install the brake hose.

○Replace the washers [A] on each side of hose fitting [B] with new ones.

- Tighten:

Torque - Brake Hose Banjo Bolt: 25 N·m (2.5 kgf·m, 18 ft·lb)

- Install the rear master cylinder.
- Tighten:

Torque - Rear Master Cylinder Mounting Bolts: 9.8 N·m (1.0 kgf·m, 87 in·lb)

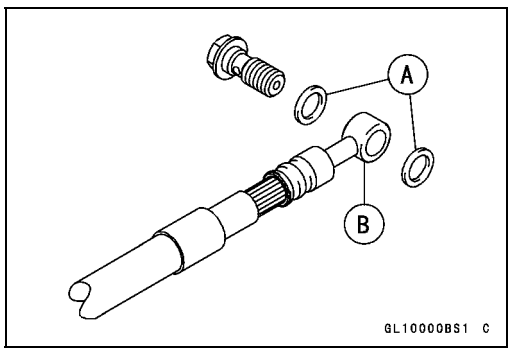

- Replace the cotter pin with a new one.
- Install the joint pin, washer and new cotter pin.
- Bend the ends [A] of the cotter pin as shown in the figure.

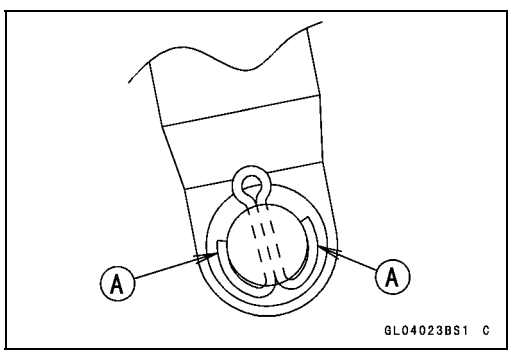

- Check the brake pedal position (see Brake Lever and Pedal Adjustment in the Periodic Maintenance chapter).
- Bleed the brake line (see Brake Line Bleeding).
- Check the brake for good braking power, no brake drag, and no fluid leakage.

⚠ WARNING

After servicing, it takes several applications of the brake pedal before the brake pads contact the disc, which could result in increased stopping distance and cause an accident resulting in injury or death. Do not attempt to ride the motorcycle until a firm brake pedal is obtained by pumping the pedal until the pads are against the disc.

Master Cylinder

Front Master Cylinder Disassembly

- Refer to the Brake Master Cylinder Cup and Dust Cover Replacement in the Periodic Maintenance chapter.

Rear Master Cylinder Disassembly

- Refer to the Brake Master Cylinder Cup and Dust Cover Replacement in the Periodic Maintenance chapter.

Master Cylinder Assembly

- Refer to the Brake Master Cylinder Cup and Dust Cover Replacement in the Periodic Maintenance chapter.

Master Cylinder Inspection (Visual Inspection)

- Disassemble the front and rear master cylinders.
- Check that there are no scratches, rust or pitting on the inner wall of each master cylinder [A] and on the outside of each piston [B].

★If a master cylinder or piston shows any damage, replace them.

- Inspect the primary [C] and secondary [D] cups.

★If a cup is worn, damaged, softened (rotted), or swollen, the piston assembly should be replace to renew the cups.

★If fluid leakage is noted at the brake lever, the piston assembly should be replaced to renew the cup.

- Check the dust covers [E] for damage.

★If they are damaged, replace them.

- Check that the relief [F] and supply [G] ports are not plugged.

★If the small relief port becomes plugged, the brake pads will drag on the disc. Blow the ports clean with compressed air.

- Check the piston return springs [H] for any damage.

★If a spring is damaged, replace it.

Front Master Cylinder [J] (KX450FC)
Front Master Cylinder [K] (KX450FD ~)
Rear Master Cylinder [L]

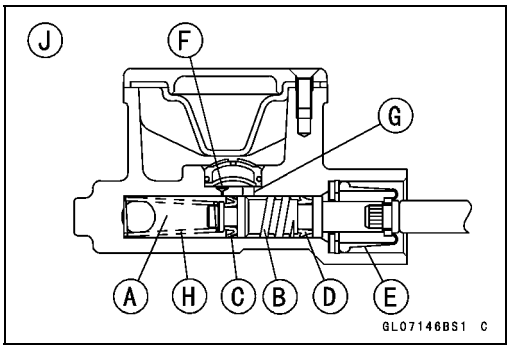

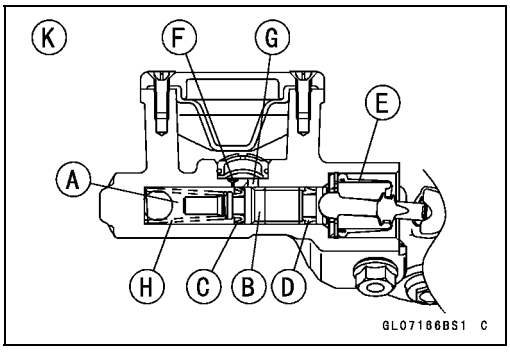

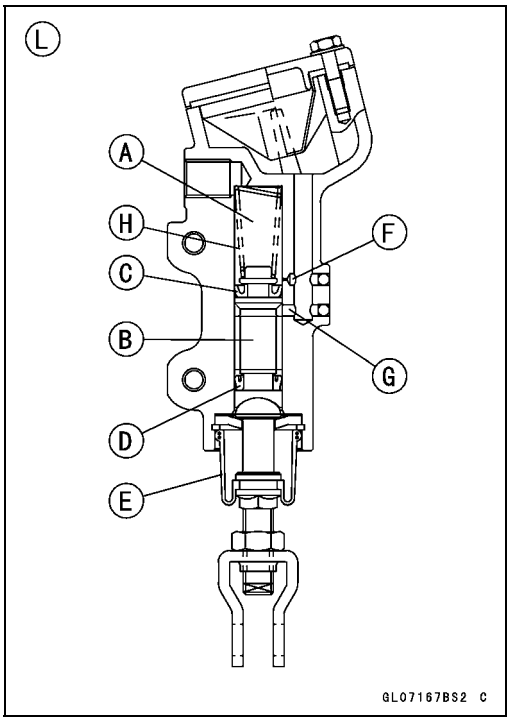

Brake Disk

Brake Disc Removal

- Remove the wheels (see Front/Rear Wheel Removal in the Wheels/Tires chapter).
- Remove the mounting bolts, and take off the disc.

Brake Disc Installation

- Install the brake disc on the wheel so that the marked side [A] faces out.
  Front Brake Disk [B]
  Rear Brake Disk [C]
- Apply a non-permanent locking agent to the threads of the brake disc mounting bolts.
- Tighten:

Torque - Front Brake Disc Mounting Bolts [D]: 9.8 N·m (1.0 kgf·m, 87 in·lb)
Rear Brake Disc Mounting Bolts [E]: 23 N·m (2.3 kgf·m, 17 ft·lb)

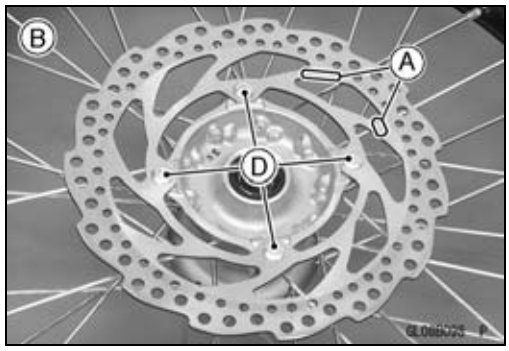

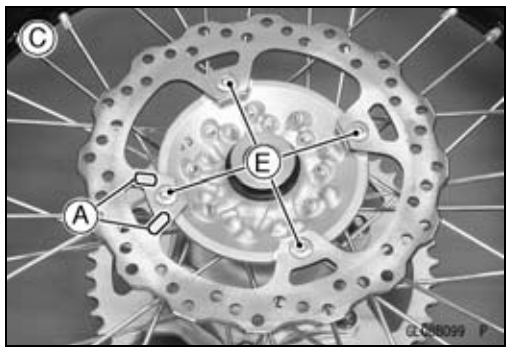

Brake Disc Inspection

- Visually inspect the disc [A].

★If it is scratched or damaged, replace the disc.

- Measure the thickness of each disc at the point [B] where it has worn the most.

Disc Thickness

Standard:	
Front	**2.85 ~ 3.15 mm (0.112 ~ 0.124 in.)**
Rear	**3.85 ~ 4.15 mm (0.152 ~ 0.163 in.)**
Service Limit:	
Front	**2.5 mm (0.10 in.)**
Rear	**3.5 mm (0.14 in.)**

★Replace the disc if it has worn past the service limit.

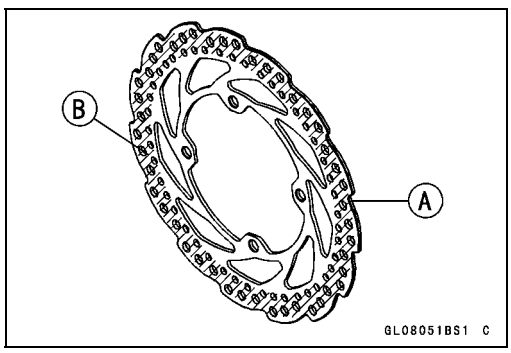

- Place a jack under the motorcycle so that the front/rear wheel is raised off the ground.

Special Tools - Jack: 57001-1238
Jack Attachment: 57001-1608

- Set up a dial gauge against the disc [A] as shown.

○For the front disc, turn the handlebar fully to one side.

- Measure the disc runout while rotating [B] the wheel slowly.

Disc Runout

Standard:	**TIR 0.25 mm (0.010 in.) or less**
Service Limit:	**TIR 0.3 mm (0.01 in.)**

★If the runout exceeds the service limit, replace the disc.

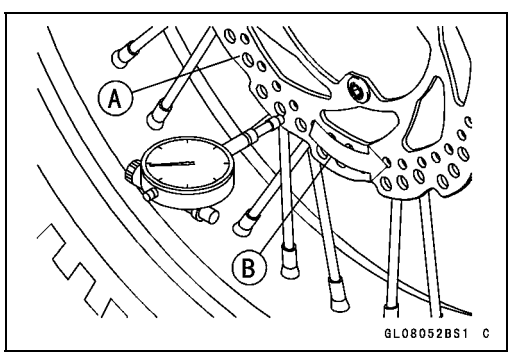

Brake Hose

Brake Hose Removal/Installation

- Refer to the Brake Hose Replacement in the Periodic Maintenance chapter.

Brake Hose Inspection

- Refer to the Brake Hoses and Connections Inspection in the Periodic Maintenance chapter.

Suspension

Table of Contents

Exploded View 13-2
Specifications 13-8
Special Tools 13-10
Front Fork 13-11
- Air Pressure (KX450FC) 13-11
- Air Pressure Adjustment (KX450FD ~) 13-11
- Compression Damping Adjustment 13-12
- Rebound Damping Adjustment 13-13
- Oil Change (each fork leg) 13-13
- Front Fork Removal 13-14
- Front Fork Installation 13-15
- Front Fork Disassembly 13-15
- Front Fork Assembly 13-16
- Adjuster Assembly Inspection 13-17
- Base Valve Assembly Inspection . 13-17
- Cylinder Unit Inspection 13-17
- Inner Tube Inspection 13-18
- Dust Seal Inspection 13-18
- Front Fork Spring Tension Inspection (KX450FC) 13-18

Rear Shock Absorber 13-19
- Rebound Damping Adjustment 13-19
- Compression Damping Adjustment 13-19
- Spring Preload Adjustment 13-20
- Rear Shock Absorber Spring Tension Inspection 13-21
- Rear Shock Absorber Removal ... 13-22
- Rear Shock Absorber Installation 13-22
- Rear Shock Absorber Spring Replacement 13-22
- Rear Shock Absorber Disassembly 13-23
- Rear Shock Absorber Assembly .. 13-25
- Rear Shock Absorber Oil Change 13-26
- Rear Shock Absorber Inspection . 13-26
- Rear Shock Absorber Scrapping . 13-26

Swingarm 13-27
- Swingarm Removal 13-27
- Swingarm Installation 13-28
- Swingarm Bearing Removal 13-28
- Swingarm Bearing Installation 13-28
- Drive Chain Guide, Guide Roller, Chain Slipper Wear Inspection .. 13-29
- Swingarm Bearing, Sleeve Inspection 13-29

Tie-Rod, Rocker Arm 13-30
- Tie-Rod Removal 13-30
- Tie-Rod Installation 13-30
- Rocker Arm Removal 13-30
- Rocker Arm Installation 13-31
- Tie-Rod and Rocker Arm Bearing Removal 13-31
- Tie-Rod and Rocker Arm Bearing Installation 13-31
- Needle Bearing Inspection 13-32

Uni-Trak Maintenance 13-33
- Uni-Trak Linkage Inspection 13-33
- Tie-Rod and Rocker Arm Sleeve Wear Inspection 13-33
- Tie-Rod and Rocker Arm Mounting Bolt Bend Inspection . 13-33

Exploded View

KX450FC

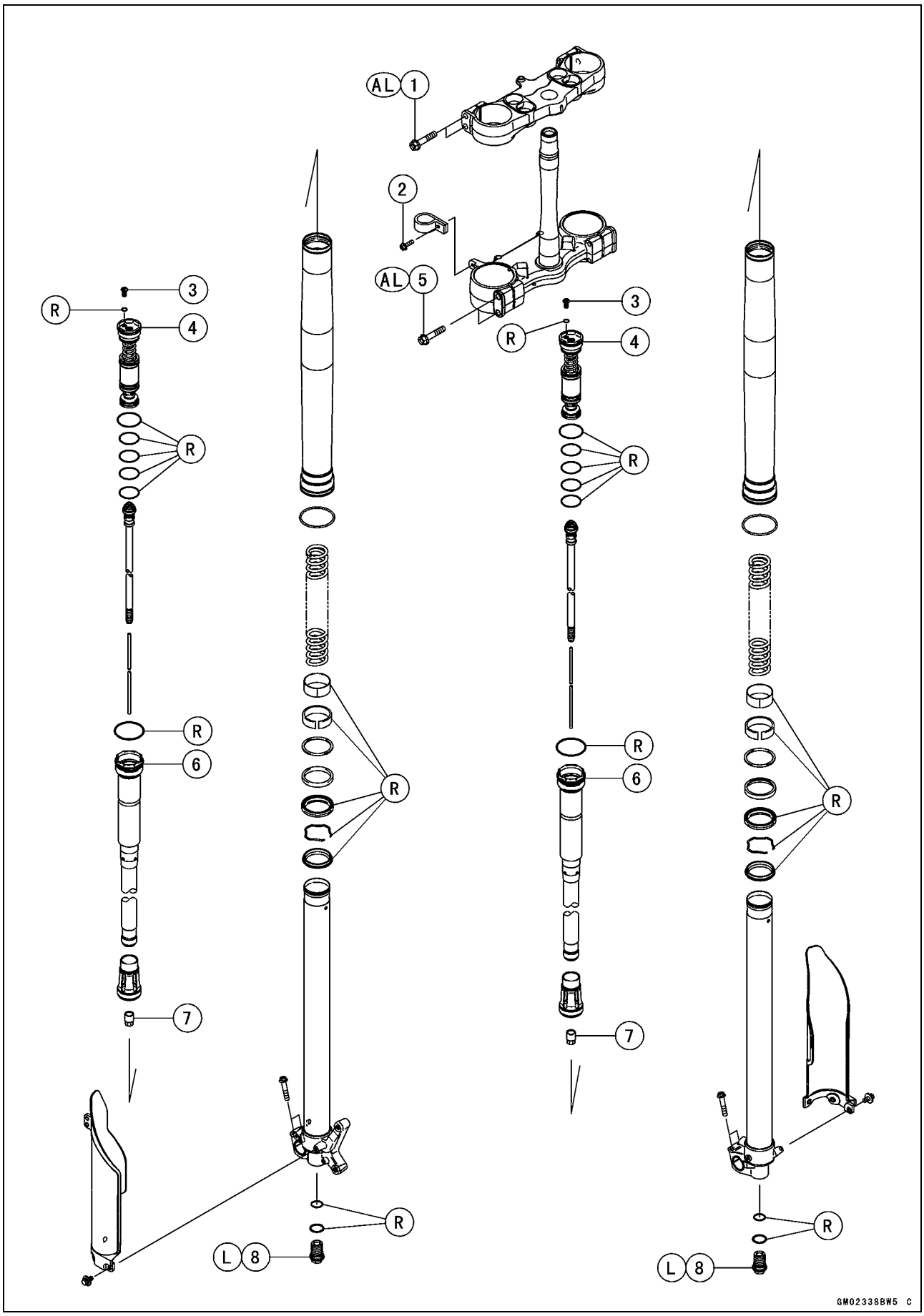

Exploded View

No.	Fastener	Torque			Remarks
		N·m	kgf·m	ft·lb	
1	Front Fork Clamp Bolts (Upper)	20	2.0	15	AL
2	Brake Hose Clamp Bolt	2.0	0.20	18 in·lb	
3	Pressure Relief Screws	1.2	0.12	11 in·lb	
4	Base Valve Assemblies	30	3.1	22	
5	Front Fork Clamp Bolts (Lower)	20	2.0	15	AL
6	Front Fork Top Plugs	30	3.1	22	
7	Adjuster Assembly Locknuts	28	2.9	21	
8	Adjuster Assemblies	55	5.6	41	L

AL: Tighten the two clamp bolts alternately two times to ensure even tightening torque.
L: Apply a non-permanent locking agent.
R: Replacement Parts

Exploded View

KX450FD ~

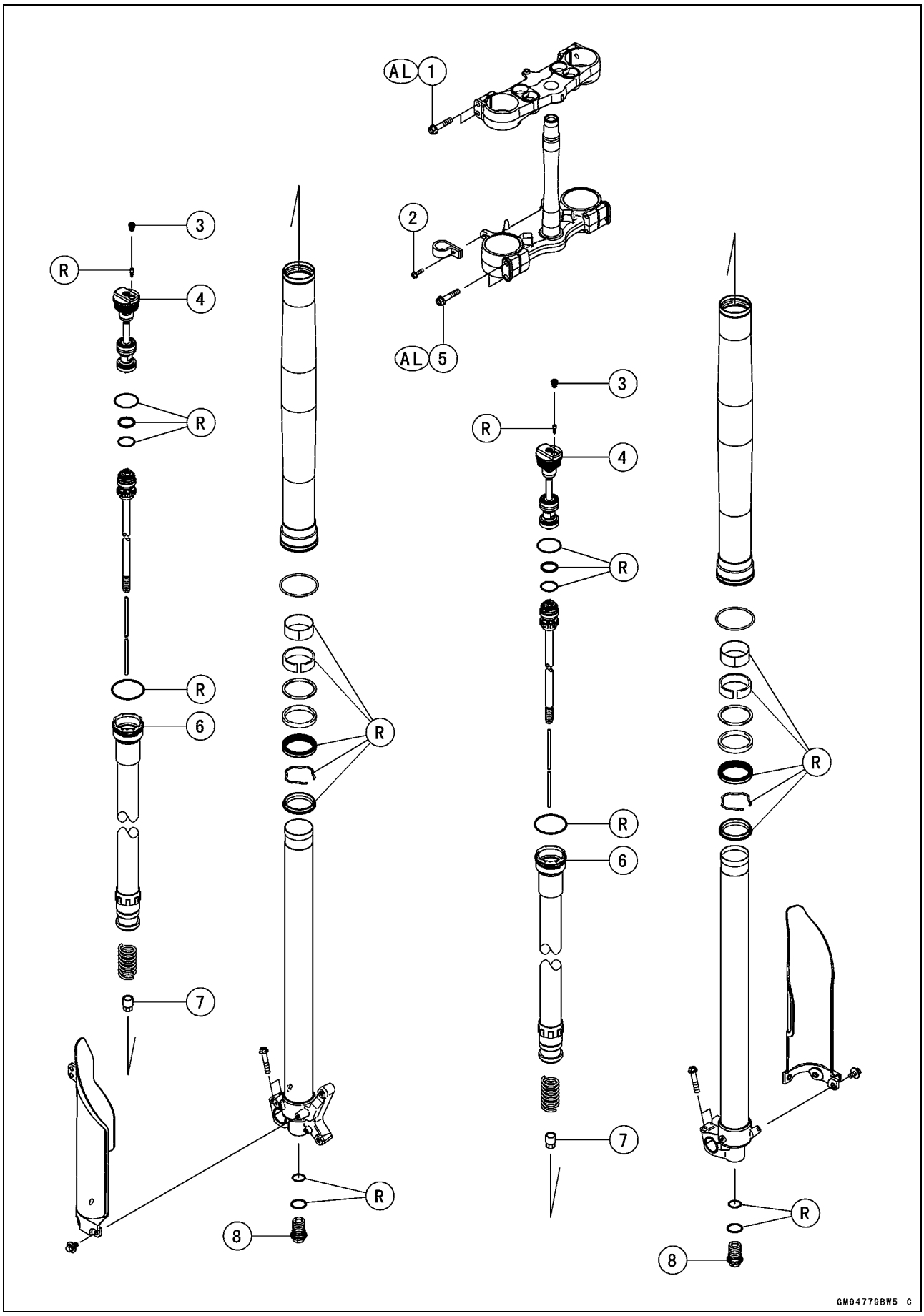

Exploded View

No.	Fastener	Torque			Remarks
		N·m	kgf·m	ft·lb	
1	Front Fork Clamp Bolts (Upper)	20	2.0	15	AL
2	Brake Hose Clamp Bolt	2.0	0.20	18 in·lb	
3	Air Valve Plug	0.2	0.020	1.8 in·lb	
4	Base Valve Assemblies	30	3.1	22	
5	Front Fork Clamp Bolts (Lower)	20	2.0	15	AL
6	Front Fork Top Plugs	45	4.6	33	
7	Adjuster Assembly Locknuts	28	2.9	21	
8	Adjuster Assemblies	55	5.6	41	

AL: Tighten the two clamp bolts alternately two times to ensure even tightening torque.
R: Replacement Parts

Exploded View

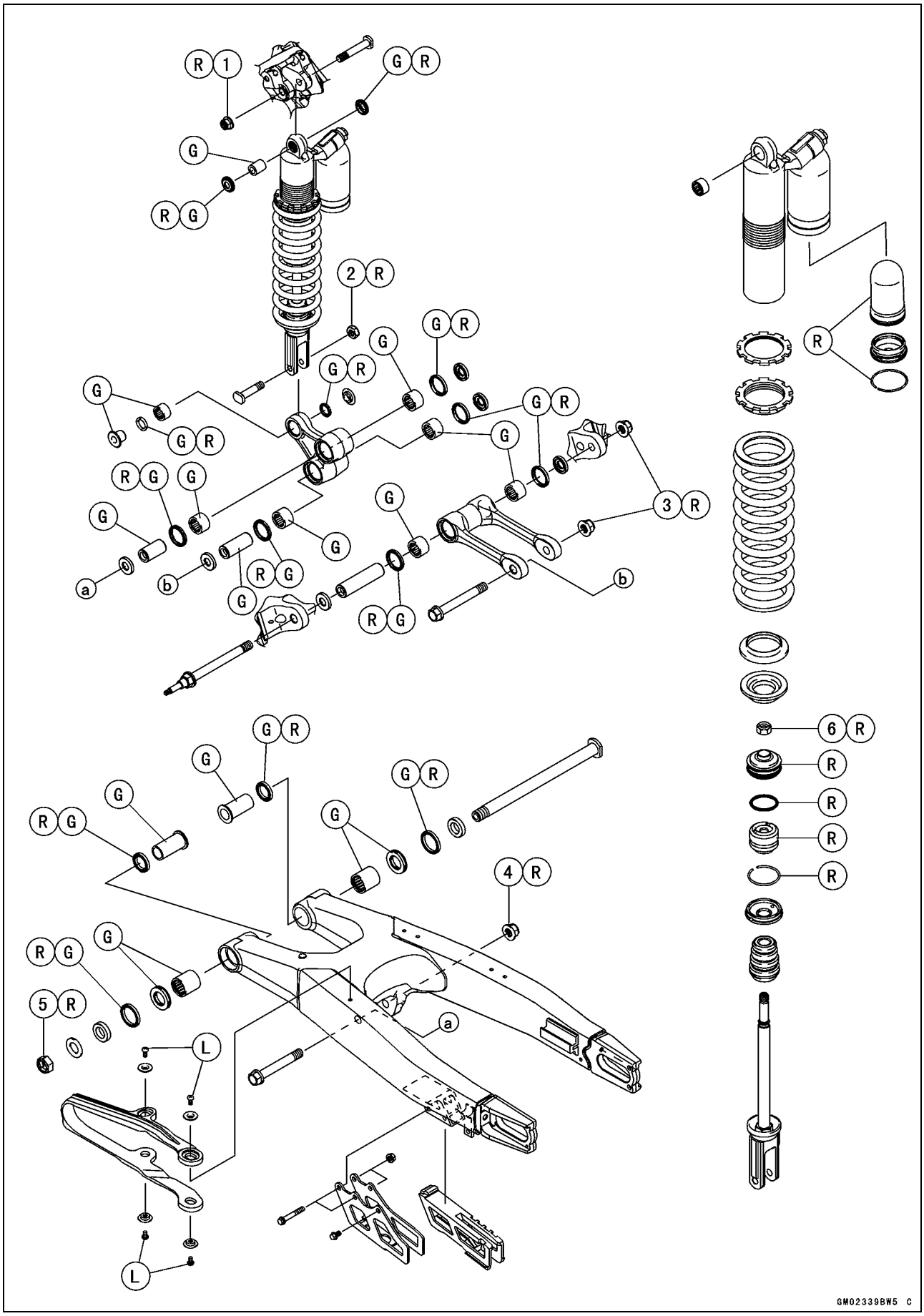

Exploded View

No.	Fastener	Torque			Remarks
		N·m	kgf·m	ft·lb	
1	Rear Shock Absorber Nut (Upper)	39	4.0	29	R
2	Rear Shock Absorber Nut (Lower)	34	3.5	25	R
3	Tie-rod Mounting Nuts	59	6.0	44	R
4	Rocker Arm Pivot Nut	59	6.0	44	R
5	Swingarm Pivot Shaft Nut	98	10	72	R
6	Piston Rod Locknut	28	2.9	21	R

G: Apply grease.
L: Apply a non-permanent locking agent.
R: Replacement Parts

Specifications

Item	Standard	Service Limit
Front Fork		
KX450FC:		
Air Pressure	Atmospheric pressure	– – –
Rebound Damping Adjustment (from the seated position adjuster turned fully clockwise)	10 clicks counterclockwise	(Adjustable Range) 20 clicks
Compression Damping Adjustment (from the seated position adjuster turned fully clockwise)	10 clicks counterclockwise (EUR, BR) 13 clicks counterclockwise	(Adjustable Range) 22 clicks
Suspension Oil:		
Type	Kawasaki Fork Oil - KHL15-10 or equivalent	– – –
Amount:		
Cylinder Unit	198 mL (6.69 US oz.)	– – –
Outer Tube	335 mL (11.3 US oz.) (EUR, BR) 345 mL (11.7 US oz.)	(Adjustable Range) 320 ~ 380 mL (10.8 ~ 12.8 US oz.)
Fork Spring Free Length	470 mm (18.5 in.)	461 mm (18.1 in.)
KX450FD ~:		
Air Pressure	240 kPa (2.4 kgf/cm², 35 psi)	(Adjustable Range) 220 ~ 280 kPa (2.2 ~ 2.8 kgf/cm², 32 ~ 41 psi)
Rebound Damping Adjustment (from the seated position adjuster turned fully clockwise)	9 clicks counterclockwise	(Adjustable Range) 20 clicks
Compression Damping Adjustment (from the seated position adjuster turned fully clockwise)	11 clicks counterclockwise	(Adjustable Range) 22 clicks
Suspension Oil	Kawasaki KHL15-11 or equivalent	– – –
Amount:		
Cylinder Unit	343 mL (11.6 US oz.)	– – –
Outer Tube	235 mL (7.95 US oz.)	(Adjustable Range) 190 ~ 265 mL (6.42 ~ 8.96 US oz.)
Rear Suspension (Uni-Trak):		
Rear Shock Absorber		
Rebound Damping Adjustment (from the seated position adjuster turned fully clockwise)	16 clicks counterclockwise (KX450FC) 19 clicks counterclockwise (KX450FD ~) (EUR, BR, TH) 20 clicks counterclockwise (KX450FD ~)	(Adjustable Range) 33 clicks
Spring Preload Adjustment (Lower surface of the adjusting nut from the center of the upper mounting hole)	128.5 mm (5.059 in.) (KX450FC) (EUR, BR) 127.5 mm (5.020 in.) (KX450FC) 127.5 mm (5.020 in.) (KX450FD ~ FE)	(Adjustable Range) 126.5 ~ 138.5 mm (4.980 ~ 5.453 in.)

Specifications

Item	Standard	Service Limit
Rear Shock Spring Free Length	255 mm (10.0 in.)	250 mm (9.84 in.)
Suspension Oil	Kawasaki KHV10-K2C or equivalent	– – –
Amount:	approx. 417 mL (14.1 US oz.)	– – –
Gas Reservoir		
High Speed Compression Damping Adjustment (from the seated position adjuster turned fully clockwise)	1 1/2 turns out (KX450FC) (EUR, BR) 1 1/4 turns out (KX450FC) 1 3/4 turns out (KX450FD ~) (EUR, BR, TH) 1 1/2 turns out (KX450FD ~)	(Adjustable Range) 2 turns out
Low Speed Compression Damping Adjustment (from the seated position adjuster turned fully clockwise)	10 clicks counterclockwise (KX450FC) (EUR, BR) 9 clicks counterclockwise (KX450FC) 8 clicks counterclockwise (KX450FD ~) (EUR, BR, TH) 11 clicks counterclockwise (KX450FD ~)	(Adjustable Range) 22 clicks
Gas Pressure	1 000 kPa (10.2 kgf/cm², 145 psi)	– – –
Tie-Rod, Rocker Arm		
Sleeve Outside Diameter:		
Tie-rod	19.987 ~ 20.000 mm (0.78689 ~ 0.78740 in.)	19.85 mm (0.7815 in.)
Rocker Arm:		
Large	19.987 ~ 20.000 mm (0.78689 ~ 0.78740 in.)	19.85 mm (0.7815 in.)
Small	15.950 ~ 16.000 mm (0.62795 ~ 0.62992 in.)	15.92 mm (0.6268 in.)
Rocker Arm Mounting Bolt Runout	TIR 0.1 mm (0.004 in.) or less	TIR 0.2 mm (0.008 in.)

Special Tools

Oil Seal & Bearing Remover:
57001-1058

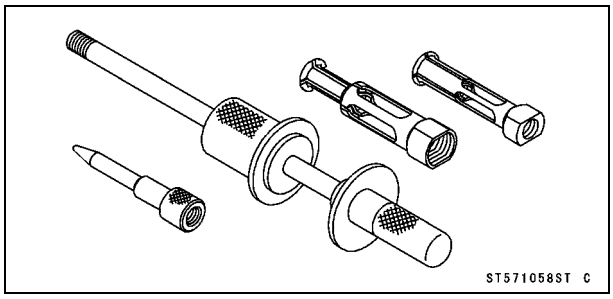

Bearing Remover Head, ϕ20 × ϕ22:
57001-1293

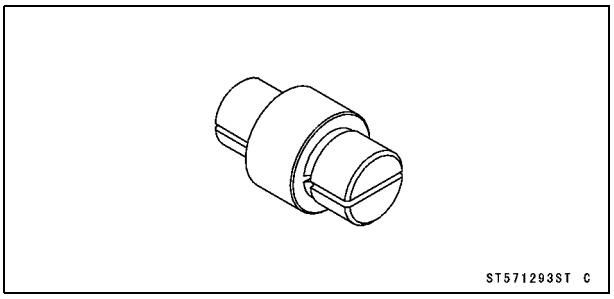

Hook Wrench R37.5, R42:
57001-1101

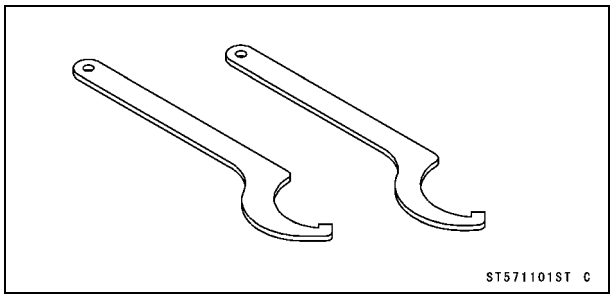

Bearing Remover Shaft, ϕ13:
57001-1377

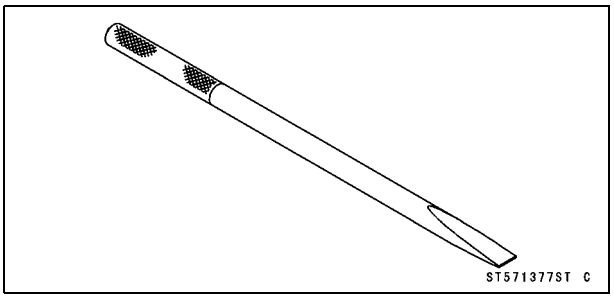

Bearing Driver Set:
57001-1129

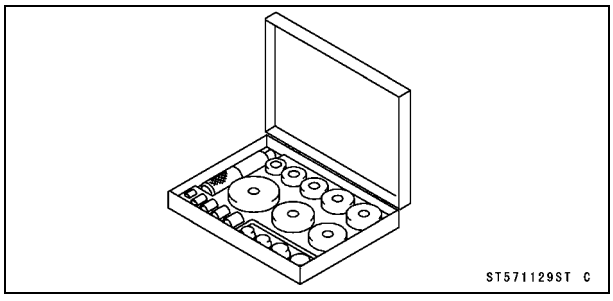

Fork Oil Seal Driver, ϕ48:
57001-1509

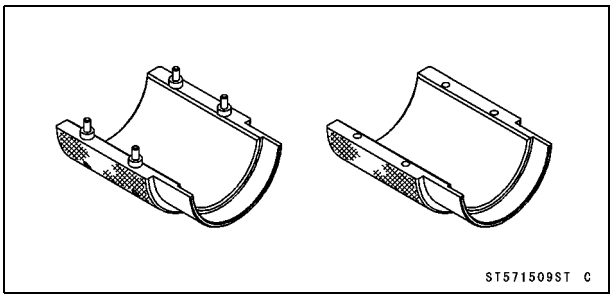

Jack:
57001-1238

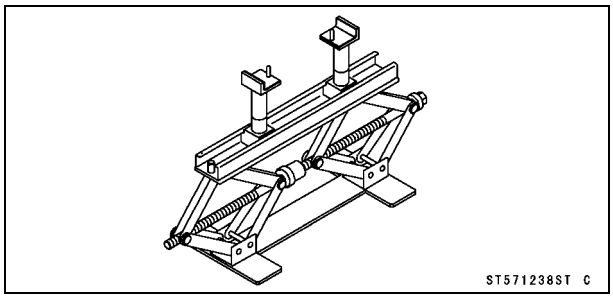

Jack Attachment:
57001-1608

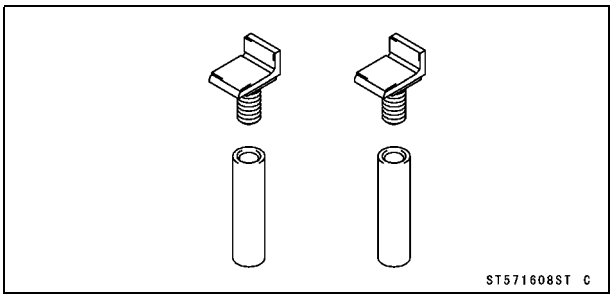

Front Fork

Air Pressure (KX450FC)

If you felt that a front fork is strong during a driving, place the jack under the frame so that the front wheel off the ground, and remove the screw [A] at the top of the front fork top plugs to let the air pressure equalize.

Special Tools - Jack: 57001-1238
Jack Attachment: 57001-1608

NOTE

○*Do not use the sidestand when adjusting the air pressure.*
○*Adjust the air pressure when the front forks are cold.*

- Replace the O-ring with a new one.
- Install the screw.

Air Pressure Adjustment (KX450FD ~)

Before riding, adjust the air pressure to the specific value.

- Place the jack under the frame so that the front wheel off the ground.

Special Tools - Jack: 57001-1238
Jack Attachment: 57001-1608

NOTE

○*Do not use the sidestand when adjusting the air pressure.*

- Remove:
  Number Plate (see Number Plate Removal in the Frame chapter)
  Air Valve Plug
- Install the air valve adapter [A].
- Apply grease to the O-ring on the air valve adapter.

NOTE

○*When using the air valve adapter, make sure that there is no dust or foreign material on the threads and O-ring.*
○*When the handlebar clamps are in the front position in the steering stem head, the air valve adapter cannot be installed.*

- Adjust the air pressure in each fork leg within the specified range below.

Air Pressure:

Standard setting: 240 kPa (2.4 kgf/cm², 35 psi)

Adjustable Range: 220 ~ 280 kPa (2.2 ~ 2.8 kgf/cm², 32 ~ 41 psi)

⚠ WARNING

When riding and transporting the motorcycle, make sure that the air pressure is within the adjustable range. If used outside the adjustable range, running stability can decrease and cause an accident resulting in serious injury or death.
Be sure to remove the air valve adapter before riding. If the air valve adapter is damaged by a stone during riding, air leakage can cause loss of control and an accident resulting in serious injury or death.

NOTICE

Do not pressurize the fork to more than 500 kPa (5.0 kgf/cm², 73 psi) or the fork may be damaged.

- After air pressure adjustment, remove the air valve adapter.

NOTE

○*Do not ride with the air valve adapter attached to the motorcycle.*
○*Always cap the air valve adapter during storage.*

- Tighten:

Torque - Air Valve Plug: 0.2 N·m (0.020 kgf·m, 18 in·lb)

NOTICE

Be sure to install the air valve plug to prevent dust from entering.

Compression Damping Adjustment

- Place the jack under the frame so that the front wheel off the ground.

Special Tools - Jack: 57001-1238
Jack Attachment: 57001-1608

- To adjust compression damping, turn the adjuster [A] on the front fork top plugs with a standard tip screwdriver until you feel a click. Adjust the compression damping to suit you preference under special condition.

NOTE

○*The left and right fork legs must have the same shock damping.*

Front Fork

Seated position [A]: adjuster turned fully clockwise.

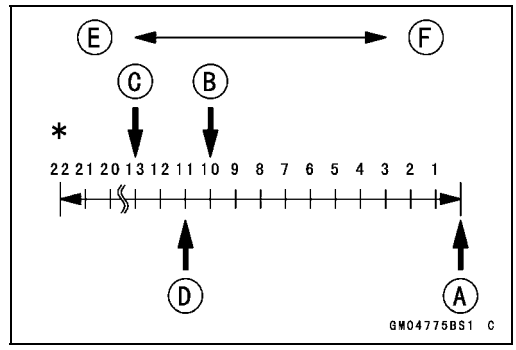

NOTICE
Do not force the compression damping adjuster beyond the fully seated position, or the adjusting mechanism may be damaged.

Compression Damping Adjuster Setting

Standard: **10 clicks [B] (KX450FC)**
(EUR, BR) 13 clicks [C] (KX450FC)
11 clicks [D] (KX450FD ~)
Softer (Counterclockwise) [E]
Harder (Clockwise) [F]

*: Although you can turn the adjuster beyond the adjustable range, effecting no changes to damping force, use it within the adjustable range.

Rebound Damping Adjustment

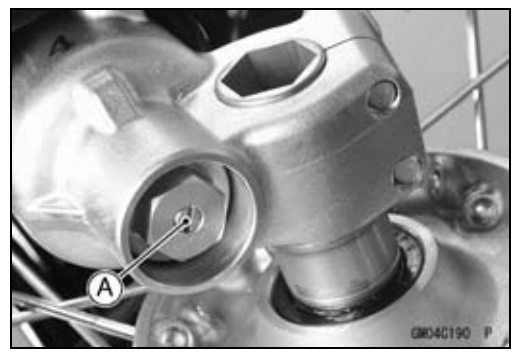

- Place the jack under the frame so that the front wheel off the ground.

Special Tools - Jack: 57001-1238
Jack Attachment: 57001-1608

- To adjust rebound damping, turn the adjuster [A] on the front fork cylinder valve with a standard tip screwdriver until you feel a click. Adjust the rebound damping to suit your preference under special condition.

NOTE

○*The left and right fork legs must have the same shock damping.*

Seated position [A]: adjuster turned fully clockwise.

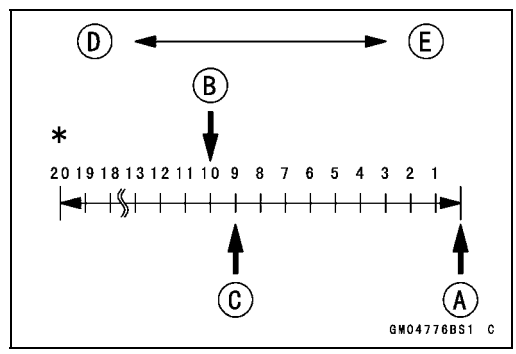

NOTICE
Do not force the rebound damping adjuster beyond the fully seated position, or the adjusting mechanism may be damaged.

Rebound Damping Adjuster Setting

Standard: **10 clicks [B] (KX450FC)**
9 clicks [C] (KX450FD ~)
Softer (Counterclockwise) [D]
Harder (Clockwise) [E]

*: Although you can turn the adjuster beyond the adjustable range, effecting no changes to damping force, use it within the adjustable range.

Oil Change (each fork leg)

- Refer to Front Fork Oil Change in the Periodic Maintenance chapter.

Front Fork

Front Fork Removal

- Remove:
  Number Plate (see Number Plate Removal in the Frame chapter)
  Bolts [A]
  Brake Hose Clamps [B]

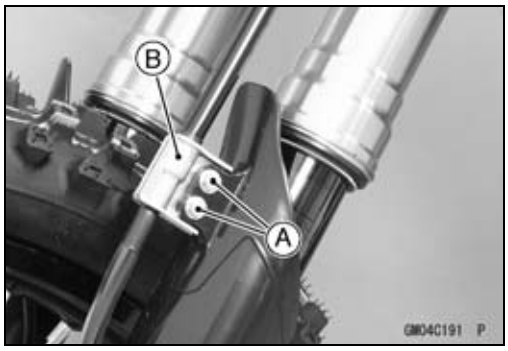

- Remove:
  Front Caliper Mounting Bolts [A]
- Remove the caliper [B] from the fork leg to be removed, and rest the caliper on some kind of stand so that it doesn't dangle.
- Remove:
  Bolts [C]
  Fork Protector [D]
  Front Wheel (see Front Wheel Removal in the Wheels/Tires chapter)

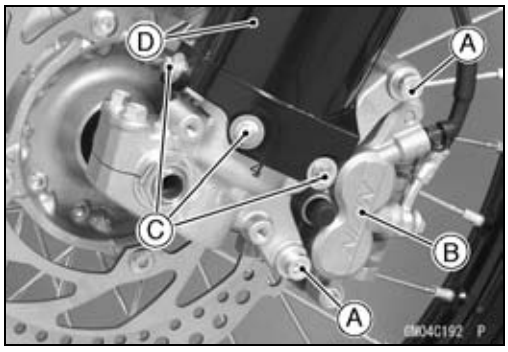

- Loosen:
  Front Fork Clamp Bolts (Upper) [A]
  Front Fork Clamp Bolts (Lower) [B]

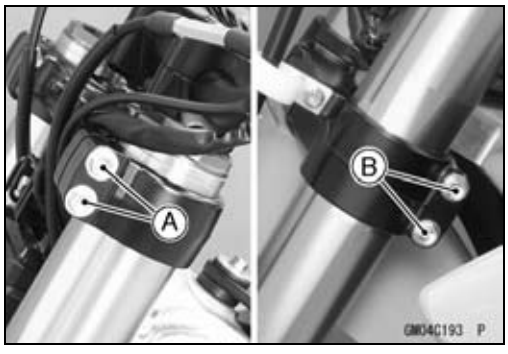

- Remove the front fork.

○With a twisting motion [A], work the fork leg [B] down and out.

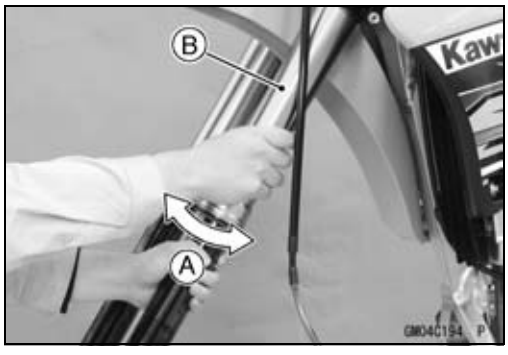

Front Fork

Front Fork Installation

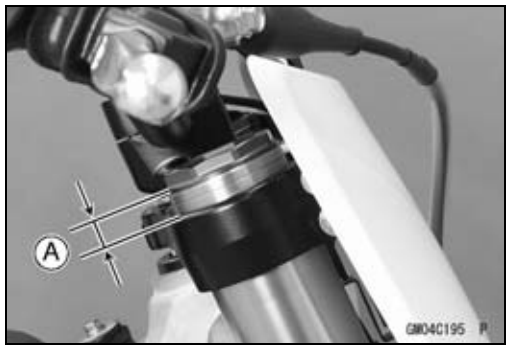

- Install the fork so that the distance [A] between the top end of the outer tube and the upper surface of the steering stem head is specified dimension.
  KX450FC (Other than EUR, BR): 10 mm (0.39 in.)
  KX450FC (EUR, BR): 5 mm (0.2 in.)
  KX450FD ~: 5 mm (0.2 in.)
- Tighten:

Torque - Front Fork Clamp Bolts (Upper): 20 N·m (2.0 kgf·m, 15 ft·lb)
Front Fork Clamp Bolts (Lower): 20 N·m (2.0 kgf·m, 15 ft·lb)

NOTE

○*Tighten the two clamp bolts alternately two times to ensure even tightening torque.*

- Run the cables and hose according to the Cable, Wire, and Hose Routing section in the Appendix chapter.
- Install the removed parts (see appropriate chapters).

Front Fork Disassembly

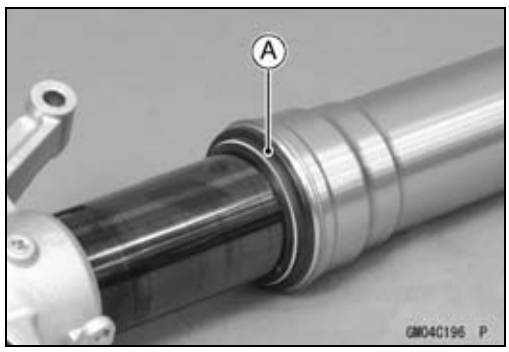

- Drain the folk oil (see Front Fork Oil Change in the Periodic Maintenance chapter).
- Remove the dust seal [A] and the retaining ring [B].

NOTICE
Be careful not to scratch the inner tube.

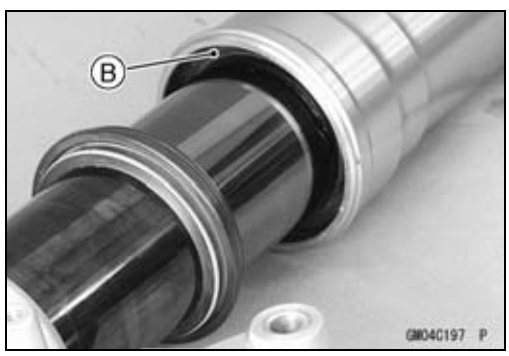

- Grasp the outer tube and stroke [A] the inner tube several times. The shock to fork seal separates the inner tube from the outer tube.

Front Fork

- Remove the following parts from the inner tube.
  Guide Bushes [A]
  Washer [B]
  Collar [C]
  Oil Seal [D]
  Retaining Ring [E]
  Dust Seal [F]

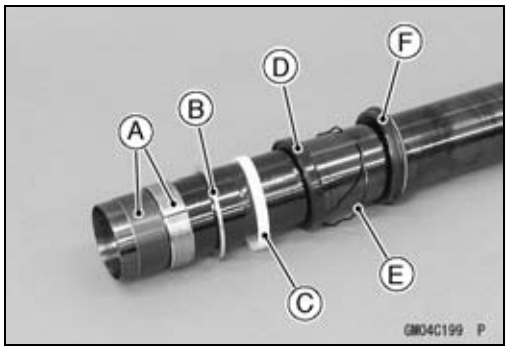

Front Fork Assembly

- When the fork tubes are not disassembled, hold the fork inverted position for more than 20 minutes to allow the fork oil to fully drain.

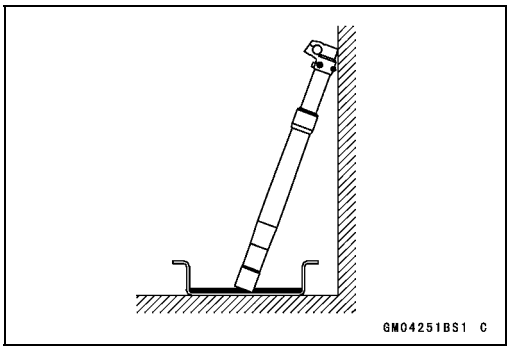

- Replace the following parts with new ones:
  Dust Seal [A]
  Retaining Ring [B]
  Oil Seal [C]
  Guide Bushes [D]
- Place an oil coated plastic bag [E] over the end of the inner tube to protect the oil seals.

○The inner tube guide bush groove has a sharp edge [F] that cut out the sealing lip of the seals as they are pushed down over the inner tube.

- Install in order these parts on the inner tube.

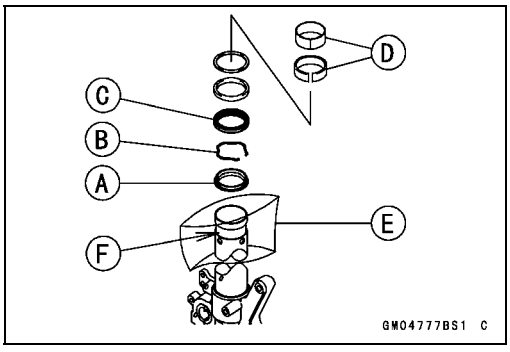

- Tap the washer [A] with the oil seal driver [B] to install the outer guide bush (KX450FC).

  Special Tool - Fork Oil Seal Driver, ϕ48: 57001-1509

- Tap the oil seal with the oil seal driver to install the outer guide bush (KX450FD ~).

  Special Tool - Fork Oil Seal Driver, ϕ48: 57001-1509

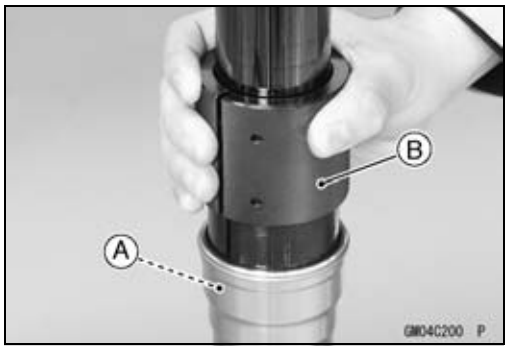

- Install the oil seal by using the fork oil seal driver [A] (KX450FC).

  Special Tool - Fork Oil Seal Driver, ϕ48: 57001-1509

Front Fork

- Install the retaining ring to the outer tube.
- Push the dust seal into the outer tube, and put the spring band on the dust seal.
- Pour the fork oil (see Front Fork Oil Change in the Periodic Maintenance chapter).

Adjuster Assembly Inspection

- Inspect the adjuster assembly [A] and push rod [B] for damage.

★If they are damaged, replace them with new ones.

- Replace the gasket [C] and O-ring [D] on the adjuster assembly with new ones.

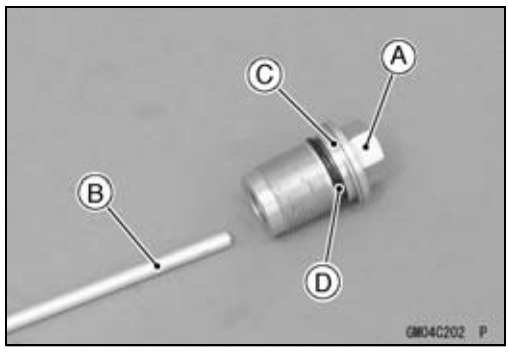

Base Valve Assembly Inspection

KX450FC

- Inspect the threads portion [A] and spring [B] of base valve assembly [C] for damage.

★If they are damaged, replace base valve assembly with new one.

- Replace the O-rings [D] with new ones.

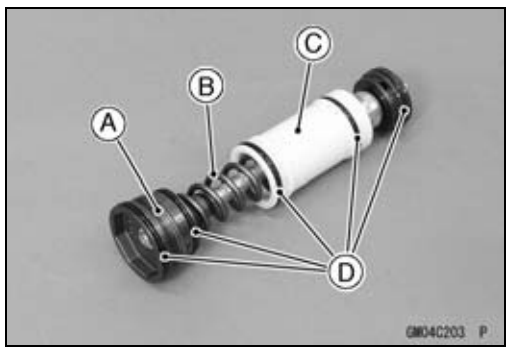

KX450FD ~

- Inspect the threads portion [A] of base valve assembly [B] for damage.

★If they are damaged, replace base valve assembly with a new one.

- Replace the O-rings [C] with new ones.

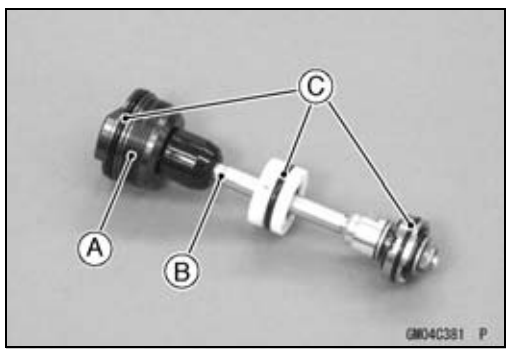

Cylinder Unit Inspection

- Inspect the piston rod [B] of cylinder unit [A] for scratches or bending.

★If it has scratches or is bent, replace cylinder unit with a new one.

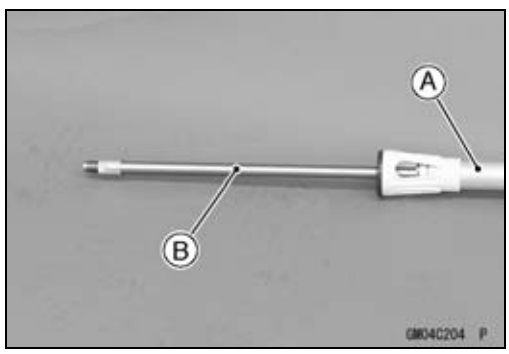

Inner Tube Inspection

- Visually inspect the inner tube [A].

★If there is any damage, replace the inner tube. Since damage to the inner tube damages the oil seal and dust seal, replace the oil seal and dust seal whenever the inner tube is replaced.

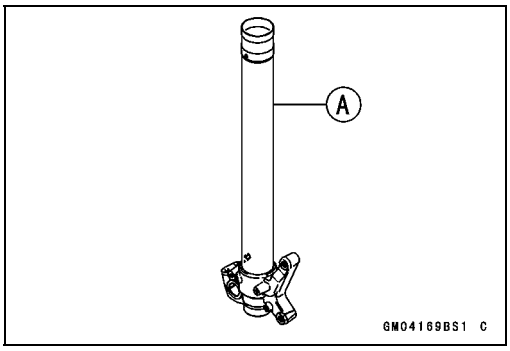

NOTICE

If the inner tube is badly bent or creased, replace it. Excessive bending, followed by subsequent straightening, can weaken the inner tube.

- Temporarily assemble the inner tube [A] and outer tube [B], and pump them back and forth manually to check for smooth operation.

★If you feel binding or catching, the inner and outer tubes must be replaced.

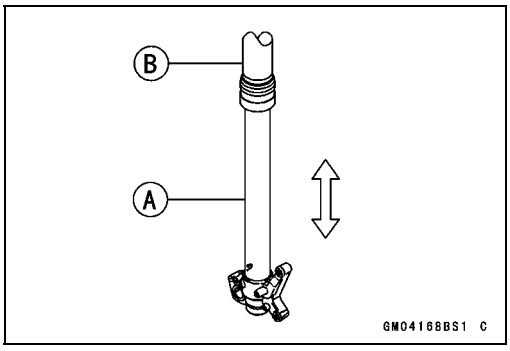

⚠ WARNING

A straightened inner or outer fork tube may fall in use, possibly causing an accident resulting in serious injury or death. Replace a badly bent or damaged inner or outer tube and inspect the other tube carefully before reusing it.

Dust Seal Inspection

- Inspect the dust seal [A] for any signs of deterioration or damage.

★Replace it if necessary.

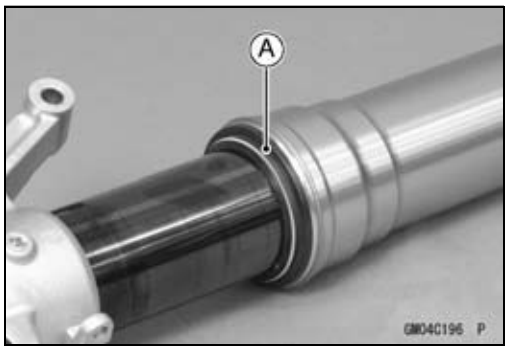

Front Fork Spring Tension Inspection (KX450FC)

- Since a spring becomes shorter as it weakens, check its free length [A] to determine its condition.

★If the spring is shorter than the service limit, it must be replaced.

Fork Spring Free Length

Standard:	**470 mm (18.5 in.)**
Service Limit:	**461 mm (18.1 in.)**

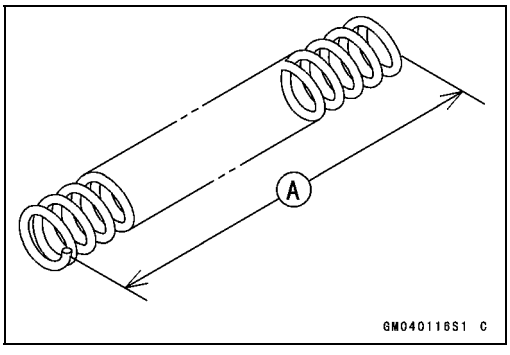

Rear Shock Absorber

To suit to various riding conditions, the spring preload of the shock absorber can be adjusted or the spring can be replaced with an optional one. Also the damping force can be adjusted easily so changing oil viscosity unnecessary.

Rebound Damping Adjustment

- Turn the rebound damping adjuster [A] on the rear shock absorber lower end with a standard tip screwdriver until you feel a click.

★If the damper setting feels too soft or too stiff, adjust it in accordance with the following table.

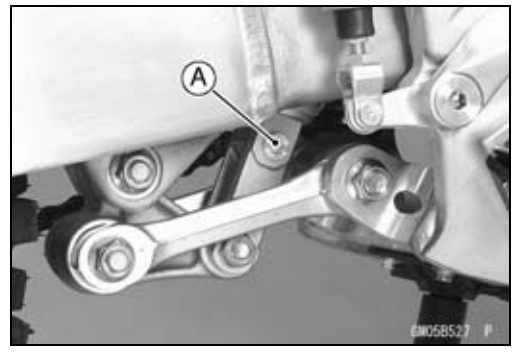

Seated position [A]: adjuster turned fully clockwise.

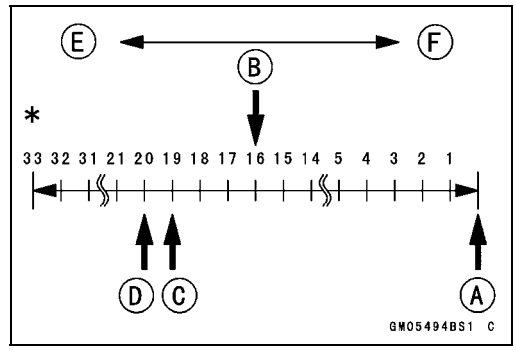

NOTICE
Do not force the rebound damping force adjuster beyond the fully seated position, or the adjusting mechanism may be damaged.

Rebound Damping Adjuster Setting

Standard: 16 clicks [B] (KX450FC)
19 clicks [C] (KX450FD ~)
(EUR, BR, TH) 20 clicks [D] (KX450FD ~)
Softer (Counterclockwise) [E]
Harder (Clockwise) [F]

*: Number of turns counterclockwise usable range - 33 clicks or more.
Counterclockwise from the fully seated position.

NOTE

○*Adjustment of the rebound damping adjuster for the rear suspension will slightly affect the compression damping force. Always make any damping adjustments in small steps and test their effects before using them in competition.*

Compression Damping Adjustment

There are two adjustments you can make to the rear shock absorber gas reservoir.

High Speed Compression Damping Adjuster [A]
Low Speed Compression Damping Adjuster [B]

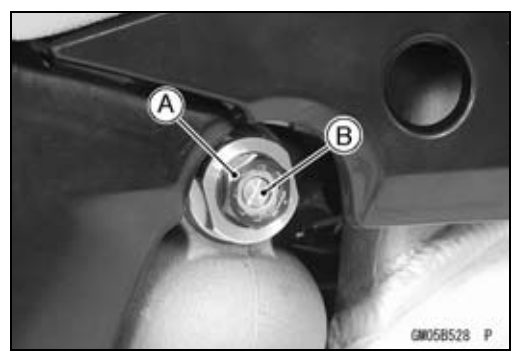

Rear Shock Absorber

- Adjust the high speed compression damping, turn the high speed compression damping adjuster with a 14 mm wrench.

★If the damping feels too soft or too stiff, adjust it in accordance with the following table.

Seated position [A]: adjuster turned fully clockwise.

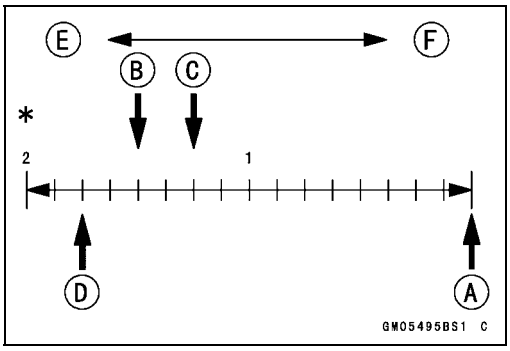

NOTICE
Do not force the compression damping force adjuster beyond the fully seated position, or the adjusting mechanism may be damaged.

High Speed Compression Damping Adjuster Setting

Standard: 1 1/2 turns out [B] (KX450FC)
(EUR, BR) 1 1/4 turns out [C] (KX450FC)
1 3/4 turns out [D] (KX450FD ~)
(EUR, BR, TH) 1 1/2 turns out (KX450FD ~)
Softer (counterclockwise) [E]
Harder (clockwise) [F]

*: Number of turns counterclockwise usable range - 2 turns or more.
Counterclockwise from the fully seated position.

- Adjust the low speed compression damping, turn the low speed compression damping adjuster with a standard tip screwdriver.

★If the damping feels too soft or too stiff, adjust it in accordance with the following table.

Seated position [A]: adjuster turned fully clockwise.

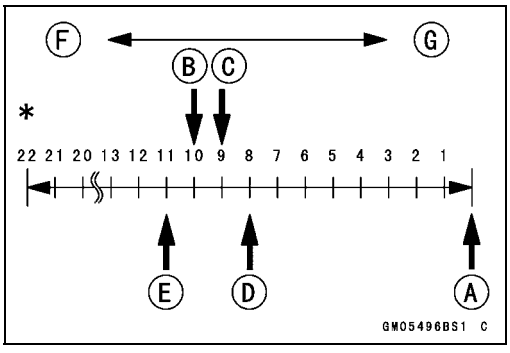

Low Speed Compression Damping Adjuster Setting

Standard: 10 clicks [B] (KX450FC)
(EUR, BR) 9 clicks [C] (KX450FC)
8 clicks [D] (KX450FD ~)
(EUR, BR, TH) 11 clicks [E] (KX450FD ~)
Softer (counterclockwise) [F]
Harder (clockwise) [G]

*: Number of turns counterclockwise usable range - 22 clicks or more.
Counterclockwise from the fully seated position.

NOTE

○*Adjustment of the compression damping adjusters for the rear suspension will slightly affect the rebound damping force. Always make any damping adjustments in small steps and test their effects before using them in competition.*

Spring Preload Adjustment

- Remove:
  Seat (see Seat Removal in the Frame chapter)
  Side Covers (see Side Cover Removal in the Frame chapter)
  Muffler Body (see Muffler Body Removal in the Engine Top End chapter)
  Rear Frame (see Rear Frame Removal in the Frame chapter)

Rear Shock Absorber

- Using the jack under the frame, raise the rear wheel off the ground.

Special Tools - Jack: 57001-1238
Jack Attachment: 57001-1608

- Using the hook wrenches [A] (R42, 57001-1103 × 2), loosen the locknut [B].

○The hook wrench (R42, 57001-1103) is in the hook wrench R37.5, R42: 57001-1101.

Special Tools - Hook Wrench R37.5, R42: 57001-1101 × 2

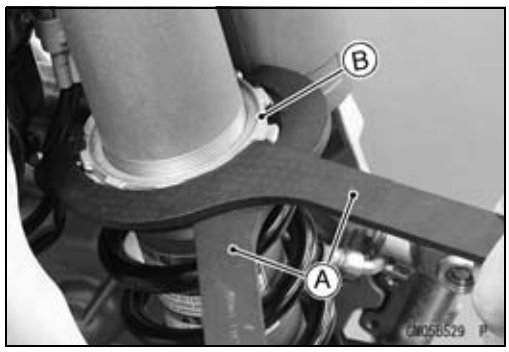

- Using the hook wrench [A] (R42, 57001-1103), turn the adjusting nut [B] as required. Turning the adjusting nut downward marks the spring action harder and upward softer.

Special Tool - Hook Wrench R37.5, R42: 57001-1101

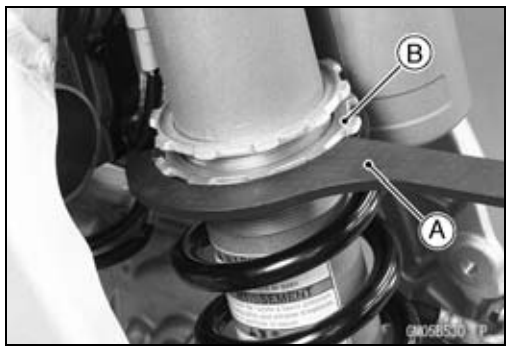

Spring Preload Adjustment
(Lower surface of the adjusting nut from the center of the upper mounting hole [A])

Standard:	**128.5 mm (5.059 in.) (KX450FC) (EUR, BR) 127.5 mm (5.020 in.) (KX450FC)**
	127.5 mm (5.020 in.) (KX450FD ~)
Adjustable Range:	**126.5 ~ 138.5 mm (4.980 ~ 5.453 in.)**

- Tighten the locknut securely.
- After adjusting, move the spring up and down to make sure that the spring is seated.
- Install the removed parts (see appropriate chapters).

Rear Shock Absorber Spring Tension Inspection

- Since the spring becomes shorter as it weakens, check its free length [A] to determine its condition.

Shock Absorber Spring Free Length

Standard:	**255 mm (10.0 in.)**
Service Limit:	**250 mm (9.84 in.)**

★If the free length falls below the service limit, replace the spring.

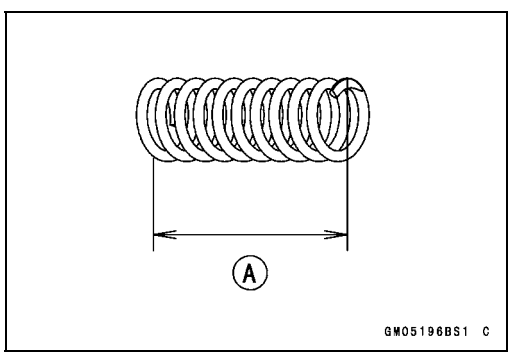

Rear Shock Absorber

Rear Shock Absorber Removal

- Remove:
  Seat (see Seat Removal in the Frame chapter)
  Side Covers (see Side Cover Removal in the Frame chapter)
  Muffler Body (see Muffler Body Removal in the Engine Top End chapter)
  Rear Frame (see Rear Frame Removal in the Frame chapter)
- Using the jack under the frame, raise the rear wheel off the ground.

Special Tools - Jack: 57001-1238
Jack Attachment: 57001-1608

NOTICE
When pulling out the mounting bolts, lift the rear wheel slightly. Forcing or tapping on a bolt could damage the bolt, sleeve, and bearing

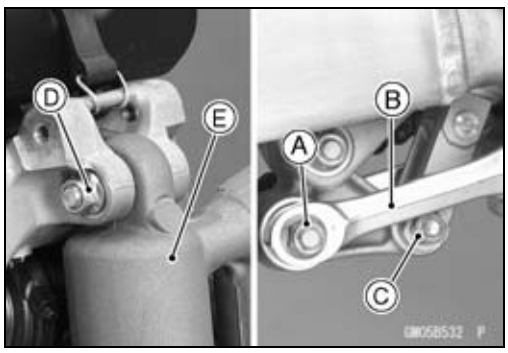

- Remove the rear tie-rod mounting bolt and nut [A] and turn the tie-rod [B] downward.
- Remove the rear shock absorber lower mounting bolt and nut [C].
- Remove the rear shock absorber upper mounting bolt [D], nut, and pull out the rear shock absorber [E] down and out.

Rear Shock Absorber Installation

- Pack the rocker arm needle bearings with grease.
- Replace:
  Rear Shock Absorber Nut (Upper)
  Rear Shock Absorber Nut (Lower)
  Rear Tie-rod Mounting Nut
- Install the rear shock absorber.
- Tighten:

Torque - Rear Shock Absorber Nut (Upper): 39 N·m (4.0 kgf·m, 29 ft·lb)
Rear Shock Absorber Nut (Lower): 34 N·m (3.5 kgf·m, 25 ft·lb)
Rear Tie-rod Mounting Nut: 59 N·m (6.0 kgf·m, 44 ft·lb)

- Install removed parts (see appropriate chapters).

Rear Shock Absorber Spring Replacement

In addition to the standard spring, heavy and light springs are available. If the standard spring is improper for your purpose, select a proper one according to the rider's weight or course conditions.

- Remove:
  Rear Shock Absorber (see Rear Shock Absorber Removal)
- Clean the threaded portion on the upper of the rear shock absorber.

Rear Shock Absorber

- Hold the lower end of the rear shock absorber in a vise with soft jaws or a heavy cloth.
- Using the hook wrenches [A] (R42, 57001-1103 × 2), loosen the locknut [B] and turn the adjusting nut [C] all way up.

○The hook wrench (R42, 57001-1103) is in the hook wrench R37.5, R42: 57001-1101.

Special Tools - Hook Wrench R37.5, R42: 57001-1101 × 2

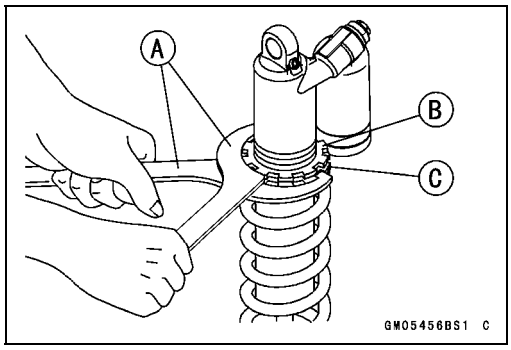

- Slide the spring seat [A].
- Remove the spring guides [B] from the shock absorber and lift off the spring [C].
- Remove the rear shock absorber from the vise.

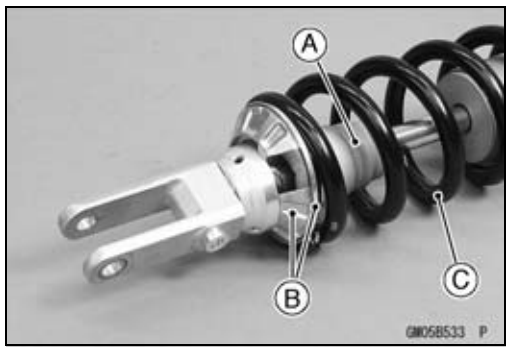

- Exchange the spring for an optional part.

○Install the spring so that large diameter end [A] faces upward.

- Install the spring guide.
- Adjust the spring preload (see Spring Preload Adjustment).
- Install the rear shock absorber (see Rear Shock Absorber Installation).
- Install the removed parts (see appropriate chapters).

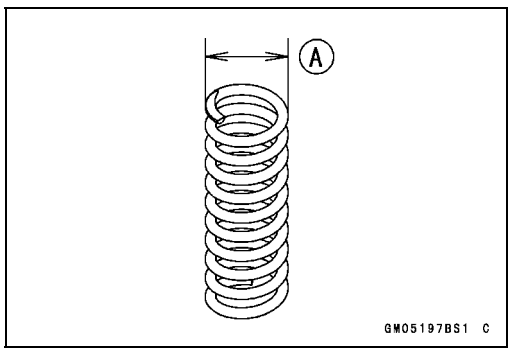

Rear Shock Absorber Disassembly

- Remove:
  Piston Rod Assembly (see Rear Shock Absorber Oil Change in the Periodic Maintenance chapter)
- Visually inspect the piston [A].

★If the piston is badly scored, rusty or damage, replace them.

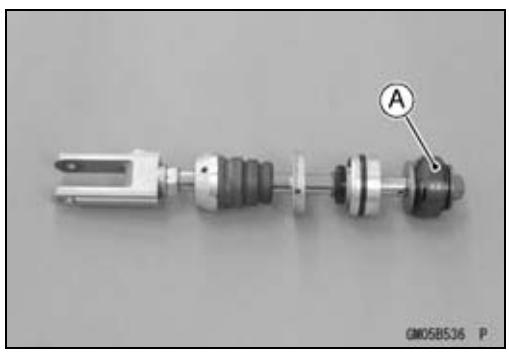

- Using the grinder, shave off the stake portion [A] of the piston rod [B].

NOTE

○*Shaving off is necessary only at the initial disassembly.*

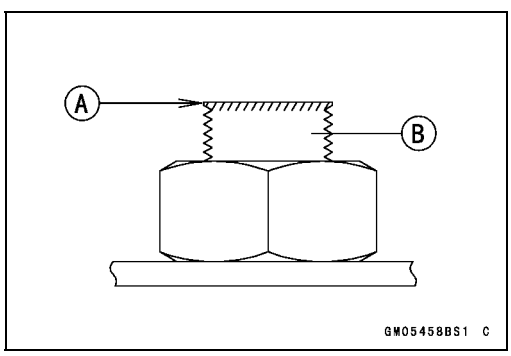

Rear Shock Absorber

- Hold the lower of the piston rod assembly in a vise with soft jaws or a heavy cloth.
- Remove the piston rod locknut [A] and washers for the threads length adjustment.
- Discard the piston rod locknut.

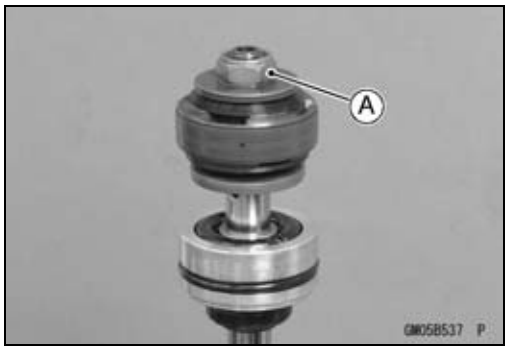

- Remove the piston assembly [A] as it is.

○Be careful not to disassemble it.
○Stick a suitable rod into the piston assembly and leave it until being reinstalled.

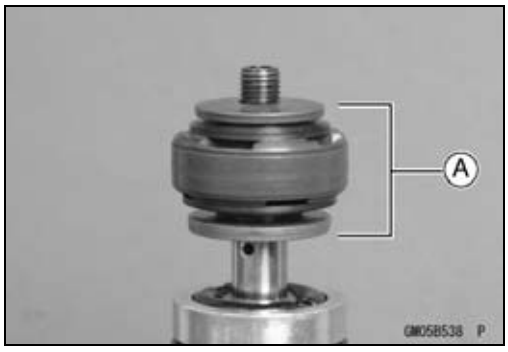

- Remove:
  Oil Seal Assembly [A]

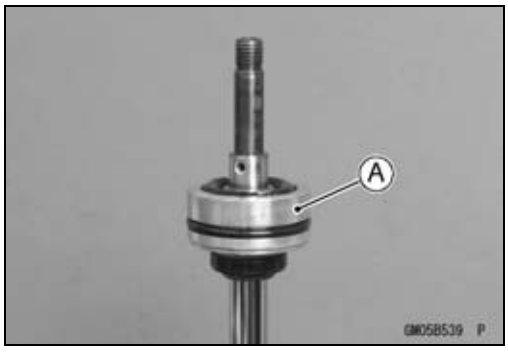

- Remove:
  Stopper [A]
  Damper [B]
  Damper Holder [C]

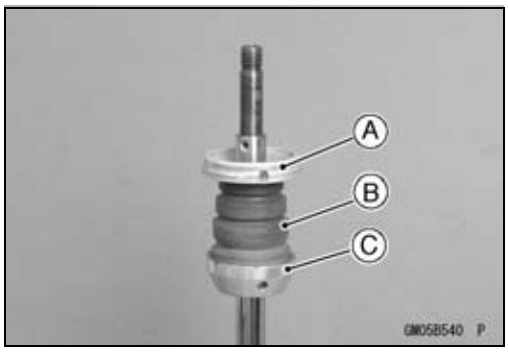

- Inspect the piston rod sliding surface [A].

★If the sliding surface is scratches or distortion, replace the piston rod assembly.

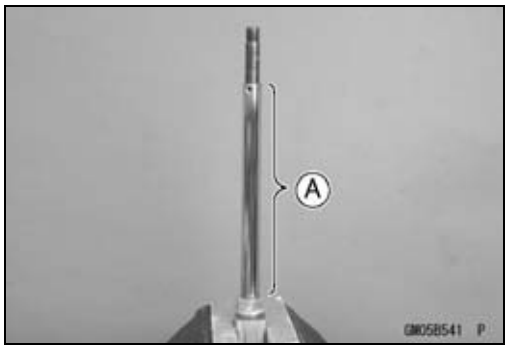

Rear Shock Absorber

- Make the threads of the piston rod end using the die [A].
  Die: ϕ12 × 1.5 mm
- Clean all parts with solvent and dry them with compressed air.

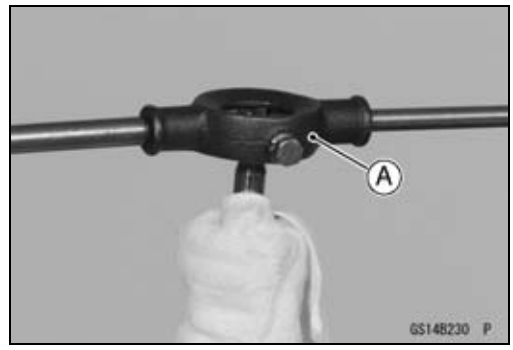

Rear Shock Absorber Assembly

- Install:
  Damper Holder [A]
  Damper [B]
  Stopper [C]

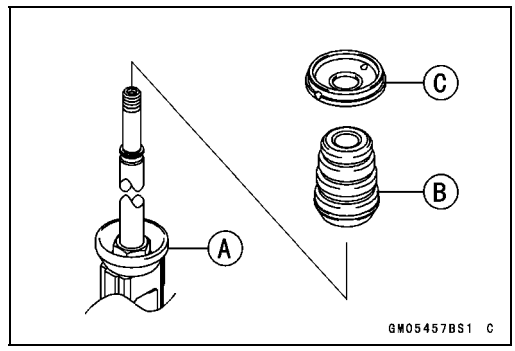

- Wrap the threads of the piston rod with tape [A].
- Apply thin coat of rear shock oil to the sliding surface of the piston rod.
- Replace the oil seal assembly [B] and O-ring [C] with new ones.
- Insert the oil seal assembly.

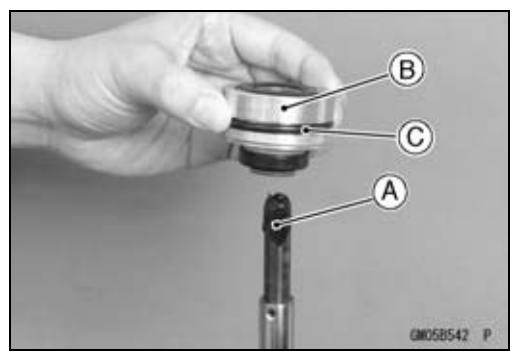

- Remove the tape from piston rod.
- Replace the piston unit in the piston assembly [A] with a new one.

○Reuse the upper and lower stoppers and valves.

NOTE

○*Be careful not to change the original positions.*

- Install the piston assembly so that the thick side of the stopper [B] faces downward.
- Reinstall one of the removed washers for the threads length adjustment and discard the rest of them.
- Install the new piston rod locknut [C].

NOTE

○*The piston rod locknut is available with the oil seal assembly as a set.*

- Tighten:

Torque - Piston Rod Locknut: 28 N·m (2.9 kgf·m, 21 ft·lb)

- Check the oil seal assembly moving smoothly on the piston rod.
- Pour the oil, and inject the nitrogen gas (see Rear Shock Absorber Oil Change in the Periodic Maintenance chapter).

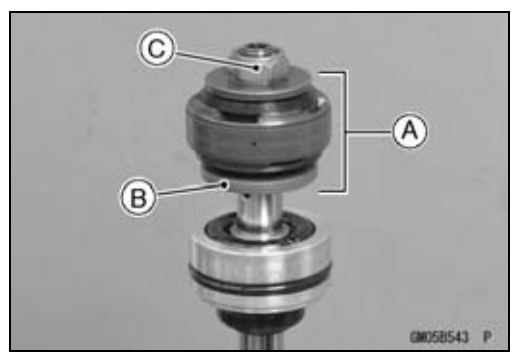

Rear Shock Absorber

Rear Shock Absorber Oil Change

- Refer to the Rear Shock Absorber Oil Change in the Periodic Maintenance chapter.

Rear Shock Absorber Inspection

- Remove the rear shock absorber (see Rear Shock Absorber Removal).
- Visually inspect the following items.
  Oil Leakage
  Crack or Dent

★If there is any damage to the rear shock absorber, replace it.

- Visually inspect the oil seal [A].

★If it show any signs of damage, replace it.

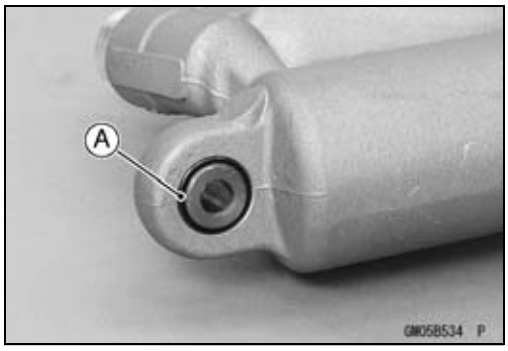

Rear Shock Absorber Scrapping

⚠ WARNING

Pressurized nitrogen may explode when heated. The rear shock contains nitrogen gas. To avoid an explosion, do not incinerate the shock body without first releasing the nitrogen and removing the shraeder valve.

- Remove the rear shock absorber (see Rear Shock Absorber Removal).
- Insert a suitable tool into the gas reservoir cap hole [A] to release the nitrogen gas.

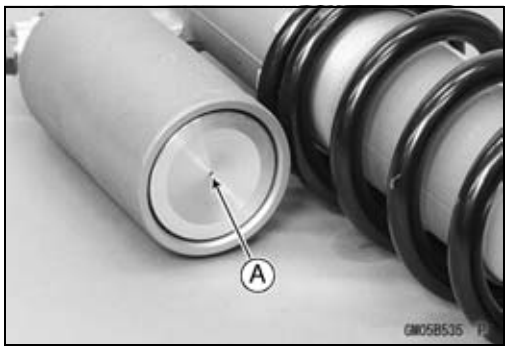

Swingarm

Swingarm Removal

- Remove:
  Rear Wheel (see Rear Wheel Removal in the Wheels/Tires chapter)
  Rear Flap (see Rear Flap Removal in the Frame chapter)
  Brake Hose Clamps [A]

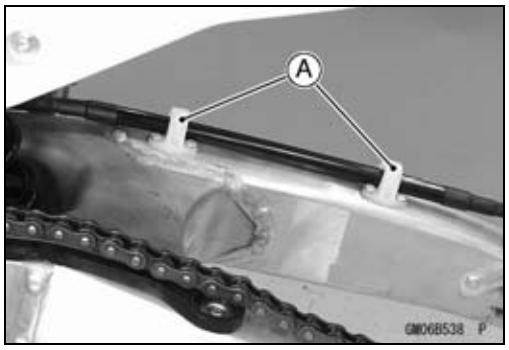

- Remove:
  Bolts [A] and Nuts [B]
  Chain Guide Plate [C]
  Chain Guide [D]

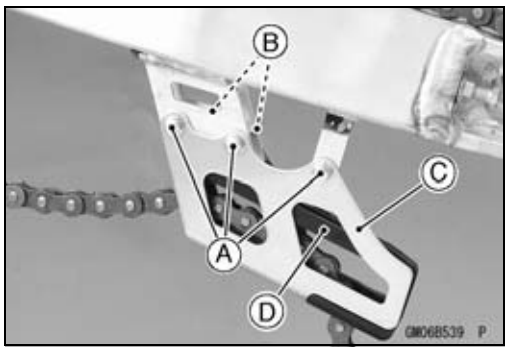

- Remove the rocker arm pivot nut [A] and bolt [B].

NOTICE
When pulling out the mounting bolts, lift the swingarm slightly. Forcing or tapping on a bolt could damage the bolt, sleeve, and bearing.

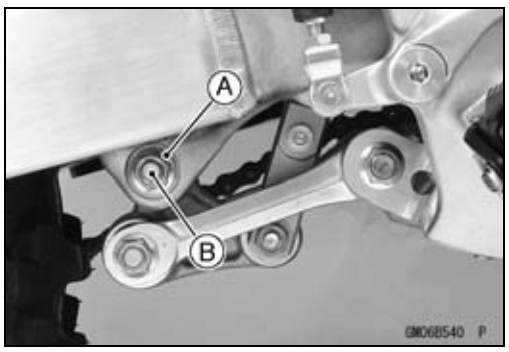

- Remove:
  Rear Master Cylinder Mounting Bolts [A]
  Brake Pedal Bolt [B]
  Brake Pedal Return Spring [C]
- Remove the following parts as a set.
  Brake Pedal
  Rear Brake Master Cylinder
  Brake Hose
  Rear Brake Caliper

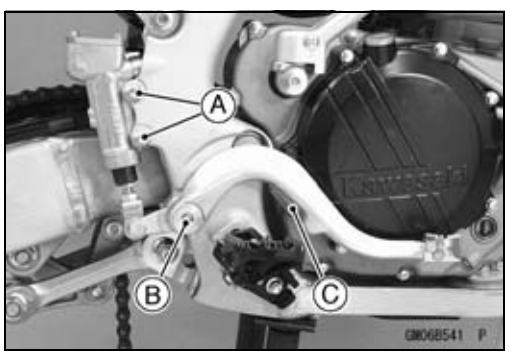

- Remove the swingarm pivot shaft nut [A].
- Pull out the swingarm pivot shaft [B], and remove the swingarm [C].

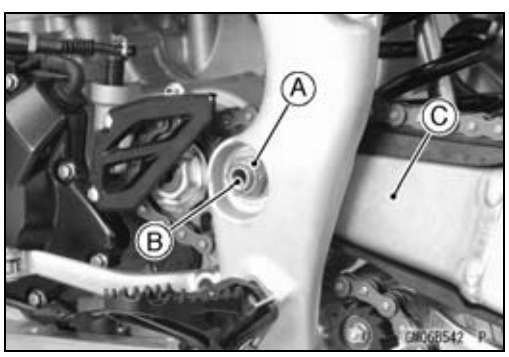

Swingarm

- Remove the screws [A].
- Remove the chain slipper [B] from the swingarm.

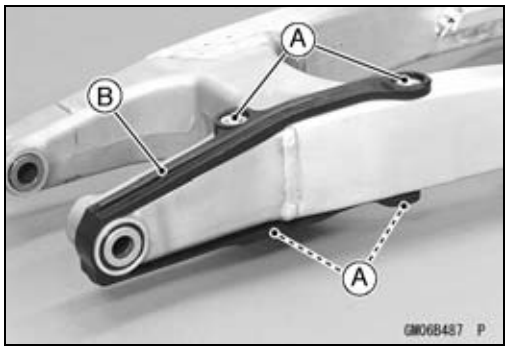

Swingarm Installation

- Apply plenty of grease to the inside of the needle bearings, sleeves, and grease seals.
- Apply a non-permanent locking agent to the chain slipper mounting screws.
- Install the chain slipper, and tighten the screws.
- Replace with new ones:
  Swingarm Pivot Shaft Nut
  Rocker Arm Pivot Nut
- Apply grease to the seating surface of the rocker arm pivot nut.
- Install the swingarm.
- Tighten:

Torque - Swingarm Pivot Shaft Nut: 98 N·m (10 kgf·m, 72 ft·lb)
Rocker Arm Pivot Nut: 59 N·m (6.0 kgf·m, 44 ft·lb)

- Install the removed parts (see appropriate chapters).

Swingarm Bearing Removal

- Remove:
  Swingarm (see Swingarm Removal)
  Collars [A]
  Grease Seals [B]
  Sleeves [C]
  Needle Bearings [D]
- Remove the needle bearings [E] using the oil seal & bearing remover.

Special Tool - Oil Seal & Bearing Remover: 57001-1058

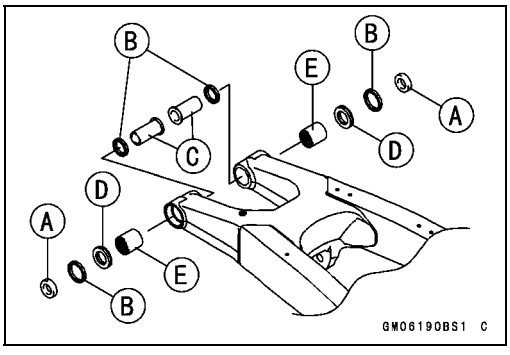

Swingarm Bearing Installation

- Replace the needle bearings and grease seals with new ones.
- Apply plenty of grease to the grease seals and needle bearings [A] [B].

NOTE

○*Install the needle bearings so that the manufacturer's marks face out.*
○*Install the grease seals so that the deep groove side of the rip to the needle bearings.*

Special Tool - Bearing Driver Set: 57001-1129

- Install the needle bearings, grease seals [C], sleeve [D] and collar [E] position as shown in the figure.

○The installation procedure is the same as the counter side.

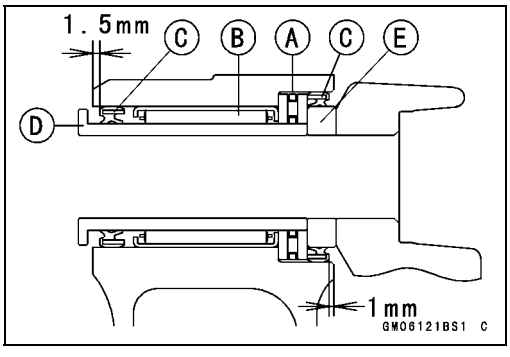

Swingarm

Drive Chain Guide, Guide Roller, Chain Slipper Wear Inspection

- Visually inspect the drive chain guide [A] and replace it if excessively worn or damaged.

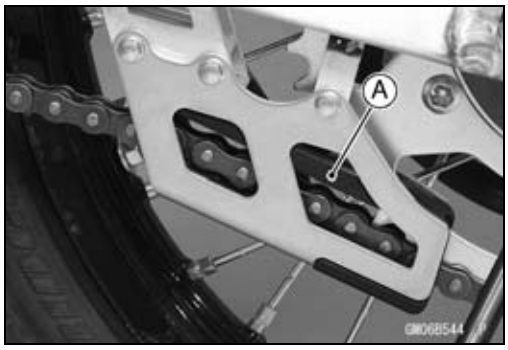

- Visually inspect the upper and lower chain guide rollers [A] and replace them if excessively worn or damaged.

- Visually inspect the chain slipper [A] on the swingarm and replace it if excessively worn or damaged.

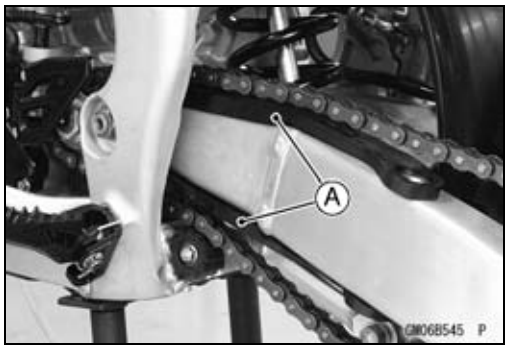

Swingarm Bearing, Sleeve Inspection

NOTICE
Do not remove the bearings for inspection. Removal may damage them.

- Inspect the needle bearing [A] installed in the swingarm.

○The rollers in a bearing normally wear very little, and wear is difficult to measure. Instead of measuring, visually inspect the bearing for abrasion, discoloration, or other damage.

★If the needle bearing and sleeve show any signs of abnormal wear, discoloration, or damage, replace them as a set.

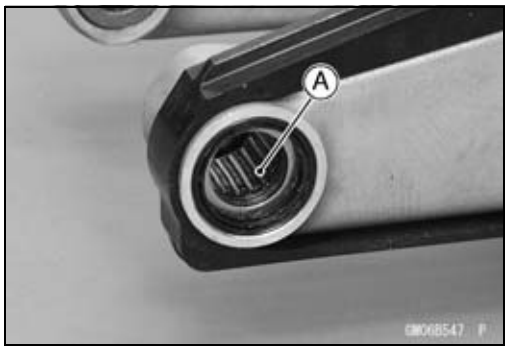

Tie-Rod, Rocker Arm

Tie-Rod Removal

- Using the jack under the frame, raise the rear wheel off the ground.

Special Tools - Jack: 57001-1238
Jack Attachment: 57001-1608

- Remove:
  Nut [A]
  Lower Chain Guide Roller [B]

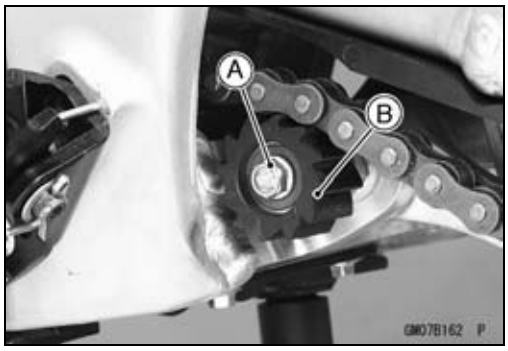

- Remove:
  Rear Tie-Rod Mounting Bolt and Nut [A]
  Front Tie-Rod Mounting Bolt and Nut [B]
  Tie-Rod [C]

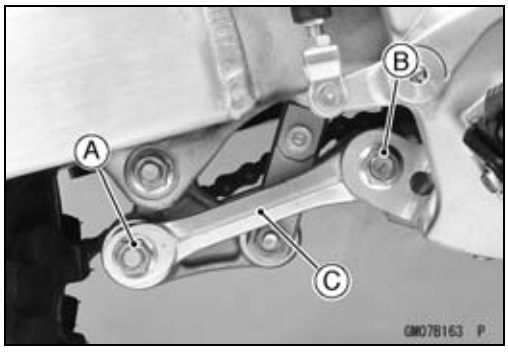

NOTICE
When pulling out the mounting bolts, lift the rear wheel slightly. Forcing or tapping on a bolt could damage the bolt, sleeve, and bearing.

Tie-Rod Installation

- Replace with new ones:
  Tie-Rod Mounting Nuts
  Lower Chain Guide Roller Mounting Nut
- Apply plenty of grease to the grease seal lips.
- Check that collars are in place on the tie-rod.
- Install the tie-rod.
- Apply grease to the seating surface of the tie-rod mounting nuts.
- Tighten:

Torque - Tie-Rod Mounting Nuts: 59 N·m (6.0 kgf·m,44 ft·lb)

- Install the lower chain guide roller, and tighten the nut.

Rocker Arm Removal

- Using the jack under the frame, raise the rear wheel off the ground.

Special Tools - Jack: 57001-1238
Jack Attachment: 57001-1608

- Remove:
  Rear Tie-Rod Mounting Bolt and Nut [A]
  Rear Shock Absorber Mounting Bolt and Nut (Lower) [B]
  Rocker Arm Pivot Bolt and Nut [C]
  Rocker Arm [D]

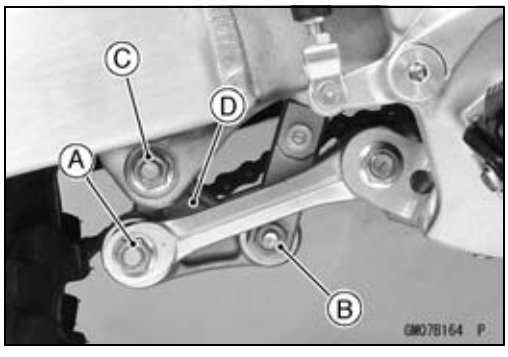

NOTICE
When pulling out the mounting bolts, lift the rear wheel slightly. Forcing or tapping on bolt could damage the bolt, sleeve, and bearing.

Tie-Rod, Rocker Arm

Rocker Arm Installation

- Replace with new ones:
  Rear Shock Absorber Mounting Nut (Lower)
  Rocker Arm Pivot Nut
  Tie-Rod Mounting Nut
- Apply plenty of grease to the needle bearings and grease seals.
- Check that collars are in place on the rocker arm.
- Install the rocker arm.
- Apply grease to the seating surface of the rocker arm pivot nut and tie-rod mounting nut.
- Tighten:

Torque - Rear Shock Absorber Mounting Nut (Lower): 34 N·m (3.5 kgf·m, 25 ft·lb)
Rocker Arm Pivot Nut: 59 N·m (6.0 kgf·m, 44 ft·lb)
Tie-Rod Mounting Nut: 59 N·m (6.0 kgf·m, 44 ft·lb)

Tie-Rod and Rocker Arm Bearing Removal

- Remove:
  Tie-Rod (see Tie-Rod Removal)
  Rocker Arm (see Rocker Arm Removal)
  Collars [A]
  Sleeves [B]
  Oil Seals [C]
  Grease Seals [D]
- Remove the needle bearing [E], using the bearing remover head and bearing remover shaft.
- Remove the needle bearings [F], using the oil seal & bearing remover.

Special Tools - Bearing Remover Head, ϕ20 × ϕ22:: 57001-1293
Bearing Remover Shaft, ϕ13: 57001-1377
Oil Seal & Bearing Remover: 57001-1058

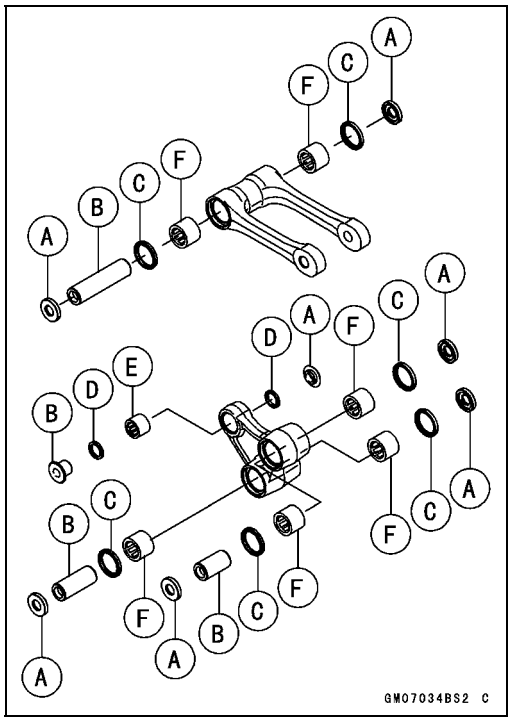

Tie-Rod and Rocker Arm Bearing Installation

- Replace the needle bearings, oil seals and grease seals with new ones.
- Apply plenty of grease to the oil seals, grease seals and needle bearings.

NOTE

○*Install the bearings so that the marked side faces out.*
○*Install the oil seals so that the deep groove side faces inward.*
○*Install the grease seals so that the groove side faces outward.*

Tie-Rod, Rocker Arm

- Install the needle bearings [A] [B], oil seals [C] and grease seals [D] so that their positions are as shown in the figure.

○The other side is also the same procedures.
Front [E]
Right Side [F]
Left Side [G]
Rear Shock Absorber [H]
Tie-Rod [I]
Rocker Arm [J]
Deep Groove [K]
Groove [L]

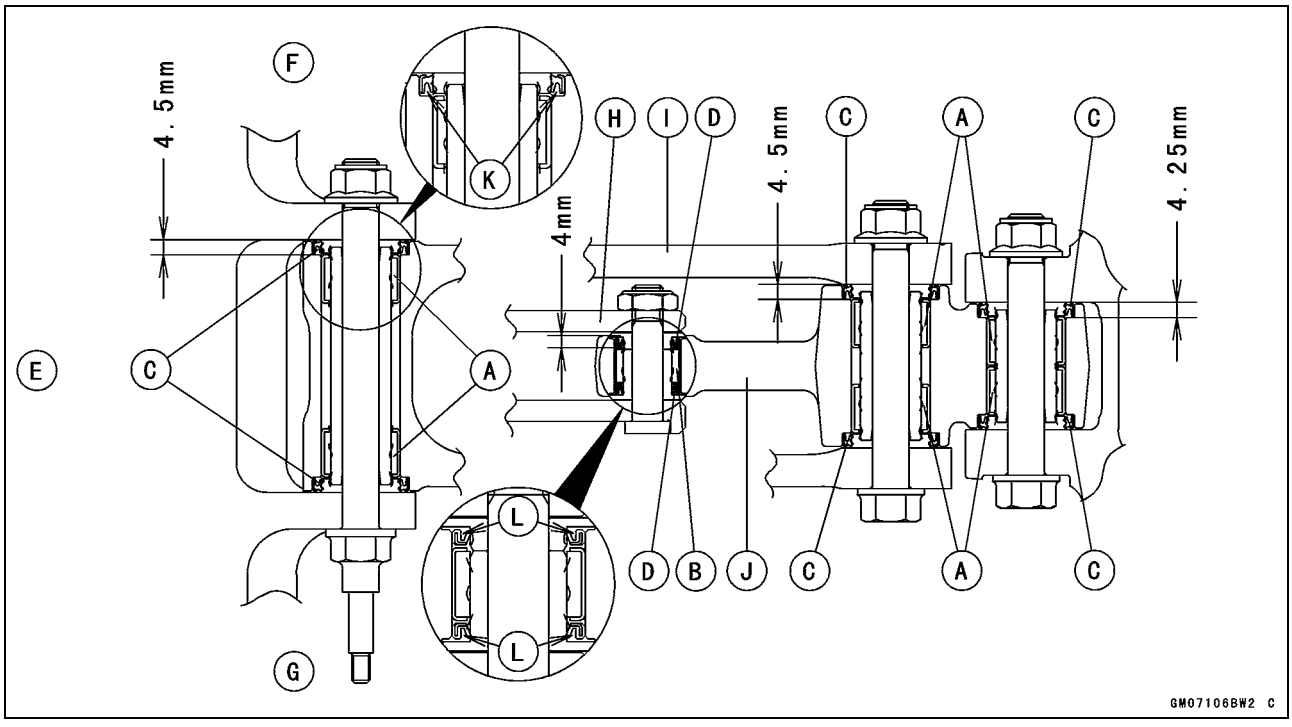

Needle Bearing Inspection

NOTICE
Do not remove the bearings for inspection. Removal may damage them.

- Inspect the needle bearings installed in the tie-rod and rocker arm.

○The needle bearing normally wear very little, and wear is difficult to measure. Instead of measuring, visually inspect the bearings for abrasion, discoloration, or other damage.

★If there is any doubt as to the condition of either needle bearing, replace the bearing and sleeve as a set.

Uni-Trak Maintenance

Uni-Trak Linkage Inspection

- Refer to the Swingarm and Uni-Trak Linkage Inspection in the Periodic Maintenance chapter.

Tie-Rod and Rocker Arm Sleeve Wear Inspection

- Pull out the sleeves [A] of the tie-rod and rocker arm.
- Measure the outside diameter of the sleeve.

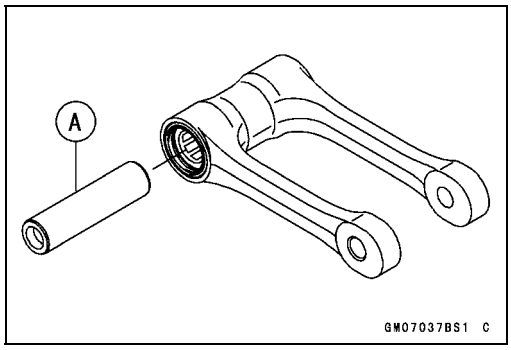

Sleeve Outside Diameter

Standard:

Tie-Rod 19.987 ~ 20.000 mm (0.78689 ~ 0.78740 in.)

Rocker Arm:

Large 19.987 ~ 20.000 mm (0.78689 ~ 0.78740 in.)

Small 15.950 ~ 16.000 mm (0.62795 ~ 0.62992 in.)

Service Limit:

Tie-Rod 19.85 mm (0.7815 in.)

Rocker Arm:

Large 19.85 mm (0.7815 in.)

Small 15.92 mm (0.6268 in.)

★If the sleeve is worn past the service limit, replace the sleeve.

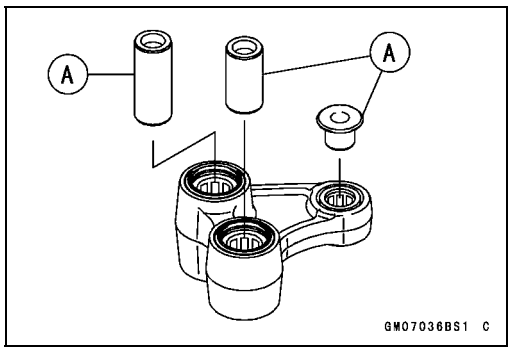

Tie-Rod and Rocker Arm Mounting Bolt Bend Inspection

A bent bolt causes vibration, poor handling, and instability.

- To measure the bolt runout, remove the bolt, place it in V blocks, and set a dial gauge to the bolt at a point halfway between the blocks.
- Turn [A] the bolt to measure the runout.

○The amount of dial variation is the amount of runout.

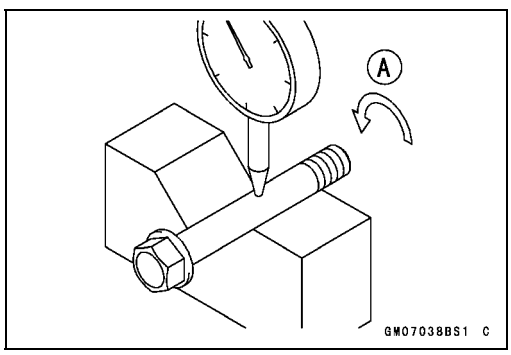

Rocker Arm Mounting Bolt Runout

Standard: TIR 0.1 mm (0.004 in.) or less

Service Limit: TIR 0.2 mm (0.008 in.)

★If runout exceeds the service limit, replace the bolt.

Steering

Table of Contents

Exploded View 14-2
Special Tools 14-4
Steering 14-5
Steering Inspection 14-5
Steering Adjustment 14-5
Steering Stem, Stem Bearing Removal 14-5
Steering Stem, Stem Bearing Installation 14-6
Stem Bearing Lubrication 14-8
Stem Bearing Wear, Damage Inspection 14-8
Stem Warp Inspection 14-8
Handlebar 14-9
Handlebar Removal 14-9
Handlebar Installation 14-10
Handlebar Position Adjustment 14-11

Exploded View

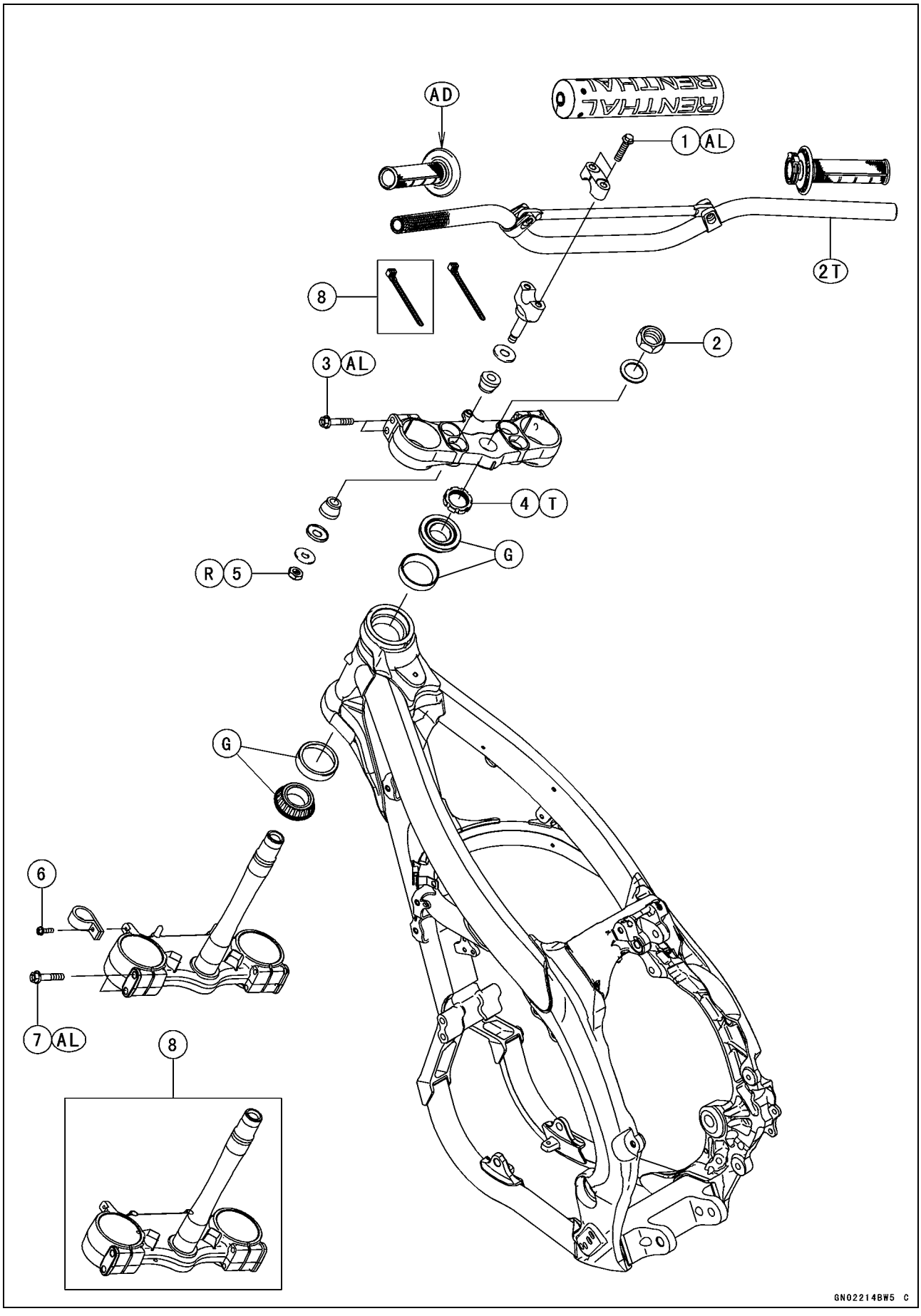

Exploded View

No.	Fastener	Torque			Remarks
		N·m	kgf·m	ft·lb	
1	Handlebar Clamp Bolts	25	2.5	18	AL
2	Steering Stem Head Nut	98	10	72	
3	Front Fork Clamp Bolts (Upper)	20	2.0	15	AL
4	Steering Stem Nut	4.9	0.50	43 in·lb	T
5	Handle Holder Nuts	34	3.5	25	R
6	Brake Hose Clamp Bolt	2.0	0.20	18 in·lb	
7	Front Fork Clamp Bolts (Lower)	20	2.0	15	AL

8. KX450FC
AD: Apply adhesive.
AL: Tighten the two clamp bolts alternately two times to ensure even tightening torque.
G: Apply grease.
2T: Apply 2-stroke oil.
R: Replacement Parts
T: First, tighten the stem locknut with 39 N·m (4.0 kgf·m, 29 ft·lb) of torque, then loosen it and retighten it with 4.9 N·m (0.50 kgf·m, 43 in·lb) of torque.

Special Tools

Bearing Puller:
57001-135

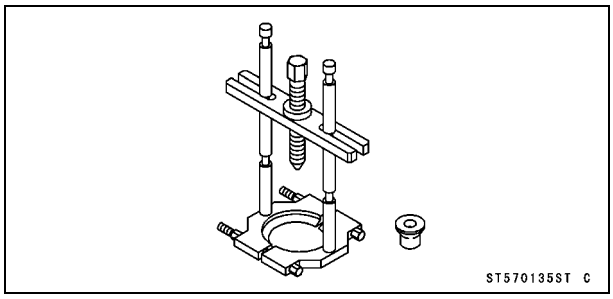

Steering Stem Bearing Driver:
57001-137

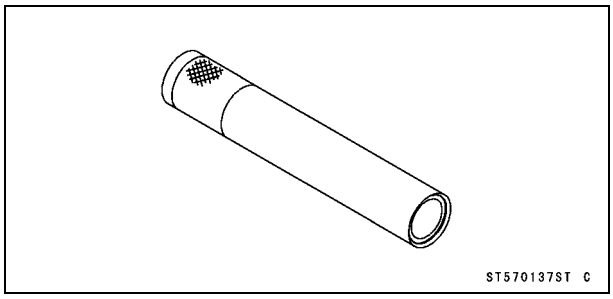

Steering Stem Bearing Driver Adapter, ϕ34.5:
57001-1074

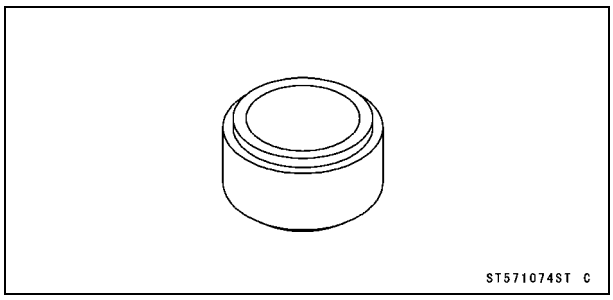

Head Pipe Outer Race Press Shaft:
57001-1075

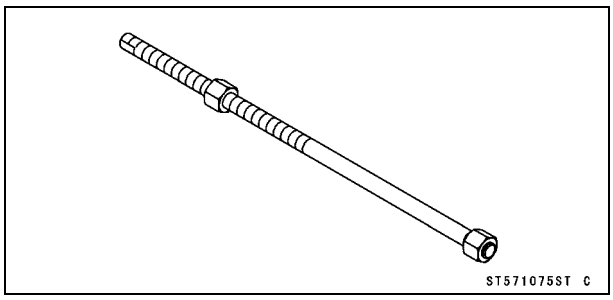

Head Pipe Outer Race Driver, ϕ51.5:
57001-1076

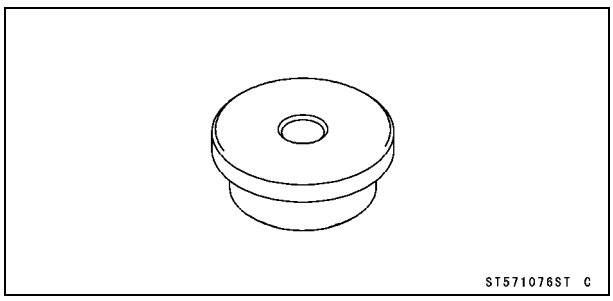

Head Pipe Outer Race Driver, ϕ54.5:
57001-1077

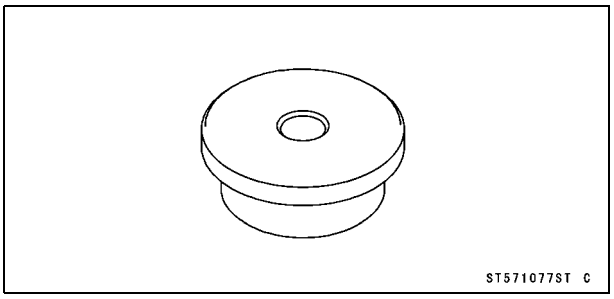

Steering Stem Nut Wrench:
57001-1100

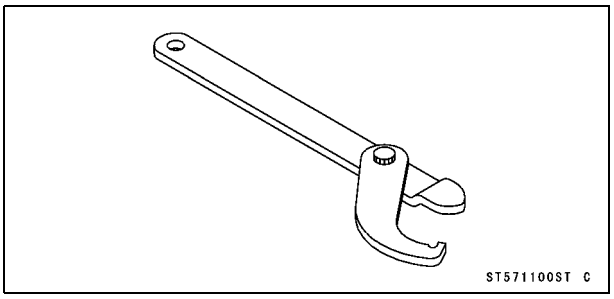

Head Pipe Outer Race Remover ID > 37 mm:
57001-1107

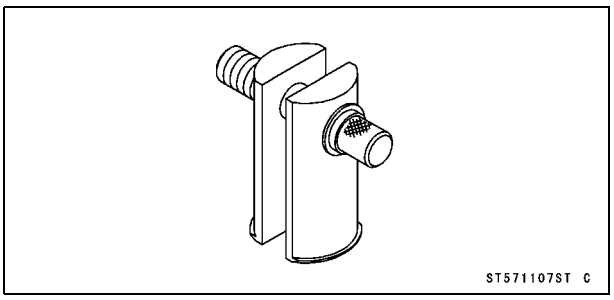

Bearing Puller:
57001-1575

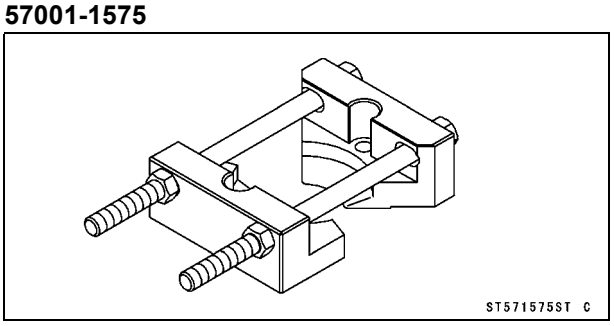

Steering

Steering Inspection

- Refer to the Steering Inspection in the Periodic Maintenance chapter.

Steering Adjustment

- Refer to the Steering Adjustment in the Periodic Maintenance chapter.

Steering Stem, Stem Bearing Removal

- Remove:
  Number Plate (see Number Plate Removal in the Frame chapter)
  Handlebar Pad [A]
  Fuel Tank Breather Hose [B]

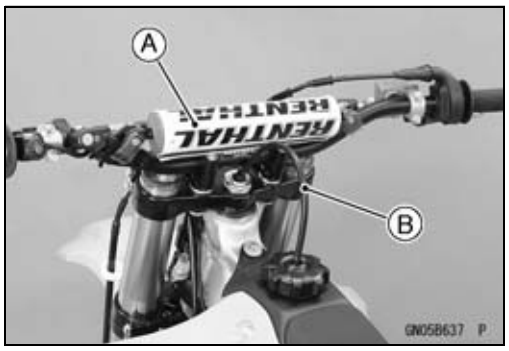

- Remove:
  Brake Hose Clamp [A]
  Handlebar Clamp Bolts [B]
  Handlebar Clamps [C]
  Handlebar [D]
  Steering Stem Head Nut [E] and Washer

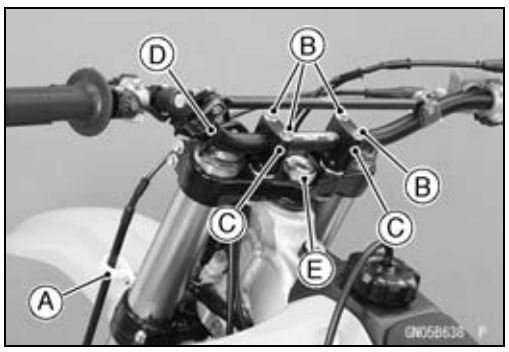

- Remove:
  Front Wheel (see Front Wheel Removal in the Wheels/Tires chapter)
  Front Fender (see Front Fender Removal in the Frame chapter)
  Front Forks (see Front Fork Removal in the Suspension chapter)
  Steering Stem Head [A]

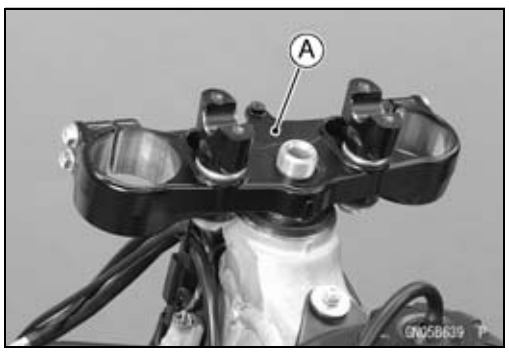

- Hold the stem base [A] by hand, and remove the steering stem nut [B] with the steering stem nut wrench [C].

  Special Tool - Steering Stem Nut Wrench: 57001-1100

- Remove the steering stem [D] and stem base from the head pipe.

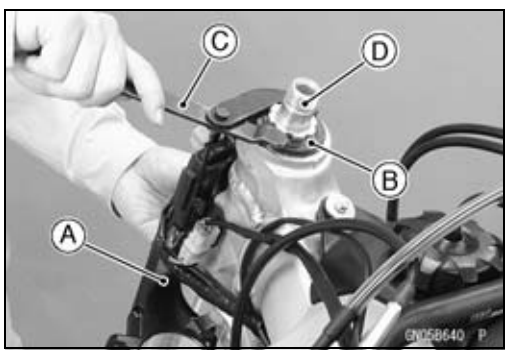

- Remove the upper stem bearing inner race (tapered roller bearing) [A].

- Drive out the bearing outer races from the head pipe.

○Remove the outer races pressed into the head pipe, using the head pipe outer race remover [A], and hammer the head pipe outer race remover to drive it out.

Special Tool - Head Pipe Outer Race Remover ID > 37 mm: 57001-1107

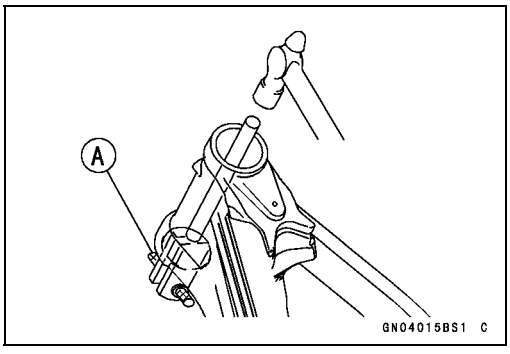

NOTE

○*If either steering stem bearing is damaged, it is recommended that both the upper and lower bearing (including outer races) should be replaced with new ones.*

- Remove the lower bearing inner race (with tapered roller bearing) [A] with its grease seal from the stem using bearing pullers.

Special Tools - Bearing Puller: 57001-135
Bearing Puller: 57001-1575

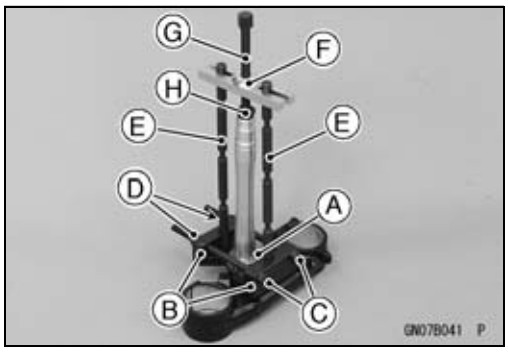

○Assemble the bearing puller (Special Tool: 57001-1575).

○Insert the each half-split base [B] under the bottom of bearing inner race and connect the both bases by tightening the bolts [C] and nuts [D].

NOTE

○*Tighten evenly two bases by the two stud bolts.*

○Assemble the parts of the bearing puller (Special Tool: 57001-135) as shown in the figure.
Stud Bolts [E]
Arm [F]
Center Bolt [G]
Adapter [H]

○Turn the center bolt by a wrench and pull the bearing inner race.

Steering Stem, Stem Bearing Installation

- Replace the bearing outer race with new ones.
- Apply grease to the outer races.
- Drive the outer races into the head pipe at the same time with the special tools.

Special Tools - Head Pipe Outer Race Press Shaft [A]: 57001-1075
Head Pipe Outer Race Driver, ϕ51.5 [B]: 57001-1076
Head Pipe Outer Race Driver, ϕ54.5 [C]: 57001-1077

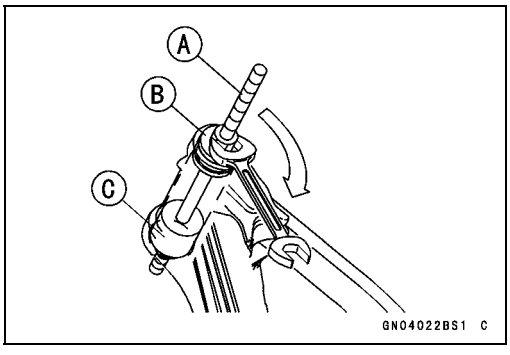

Steering

- Replace the inner races with new ones.
- Apply grease to the lower tapered roller bearing [A], and drive it onto the stem with the steering stem bearing driver [B] and adapter [C].

Special Tools - Steering Stem Bearing Driver: 57001-137
Steering Stem Bearing Driver Adapter, ϕ34.5: 57001-1074

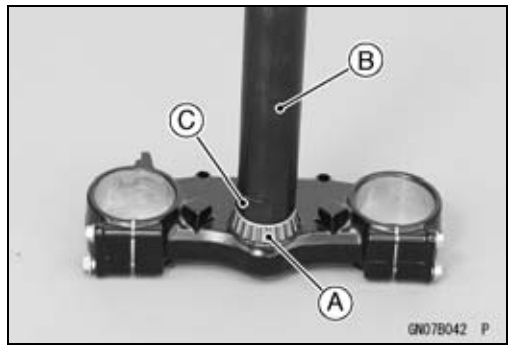

- Apply grease to the upper tapered roller bearing, and install it in the head pipe.
- Install the stem through the head pipe and upper bearing, and hand-tighten the stem nut while pushing up the stem base.
- Install the stem head and washer, and tighten the stem head nut lightly.
- Settle the bearing in place as follows;

○Tighten the stem nut to **39 N·m (4.0 kgf·m, 29 ft·lb)** of torque (To tighten the steering stem nut to the specified torque, hook the wrench [A] on the stem nut, and pull the wrench at the hole by **22.2 kgf** force [B] in the direction shown.).

Special Tool - Steering Stem Nut Wrench: 57001-1100

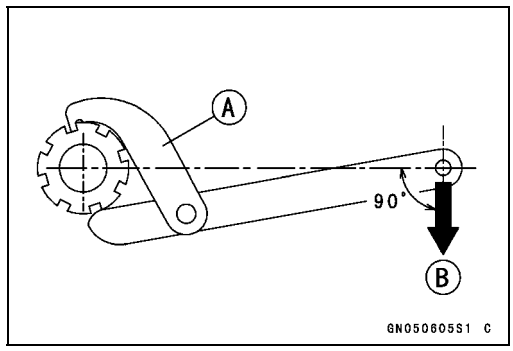

○Check that there is no play and the steering stem turns smoothly without rattles. If not, the steering stem bearings may be damaged.

○Again back out the stem nut a fraction of a turn until it turns lightly.

○Turn the stem nut lightly clockwise until it just becomes hard to turn. Do not overtighten, or the steering will be too tight.

Torque - Steering Stem Nut: 4.9 N·m (0.50 kgf·m, 43 in·lb)

- Install the stem head.
- Install the washer, and temporary the stem head nut.
- Install the front forks (see Front Fork Installation in the Suspension chapter).

NOTE

○*Tighten the fork clamp bolts (upper) first, next the stem head nut, last the fork clamp bolt (lower).*

- Tighten:

Torque - Front Fork Clamp Bolts (Upper): 20 N·m (2.0 kgf·m, 15 ft·lb)
Steering Stem Head Nut: 98 N·m (10 kgf·m, 72 ft·lb)
Front Fork Clamp Bolts (Lower): 20 N·m (2.0 kgf·m, 15 ft·lb)

NOTE

○*Tighten the two clamp bolts alternately two times to ensure even tightening torque.*

Steering

- Install the removed parts (see appropriate chapters).

⚠ WARNING

If the handlebar does not turn to the steering stop it may cause an accident resulting in injury or death. Be sure the cables, harnesses and hoses are routed properly and do not interfere with handlebar movement (see Cable, Wire, and Hose Routing section in the Appendix chapter).

- Check and Adjust:
  Steering
  Front Brake
  Clutch Cable
  Throttle Cable

Stem Bearing Lubrication

- Refer to the Steering Stem Bearing Lubrication in the Periodic Maintenance chapter.

Stem Bearing Wear, Damage Inspection

- Using a high flash-point solvent, wash the upper and lower tapered rollers in the cages, and wipe the upper and lower outer races, which are press-fitted into the head pipe, clean off grease and dirt.
- Visually check the outer race and the rollers.

★Replace the bearing assembly if it show damage.

Stem Warp Inspection

- Whenever the steering stem is removed, or if the steering cannot be adjusted for smooth action, check the steering stem shaft [A] for straightness.

★If the steering stem shaft is bent, replace the steering stem.

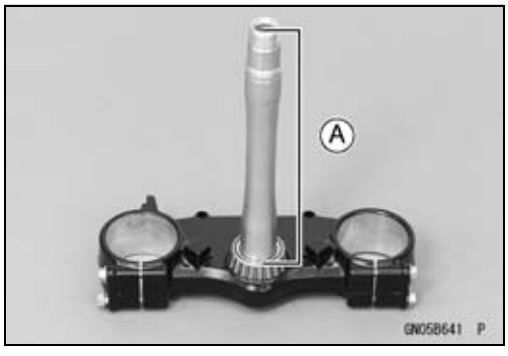

Handlebar

Handlebar Removal

● Remove:
Number Plate (see Number Plate Removal in the Frame chapter)
Handlebar Pad [A]
Fuel Tank Breather Hose [B]

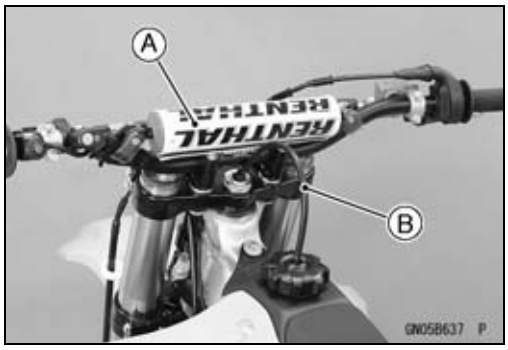

● Remove:
Clutch Lever Holder Assembly [A]
Engine Stop Switch [B]
Launch Control Mode Button [C]
Band(s) [D]
Left Handlebar Grip [E]
KX450FC [F]
KX450FD ~ [G]

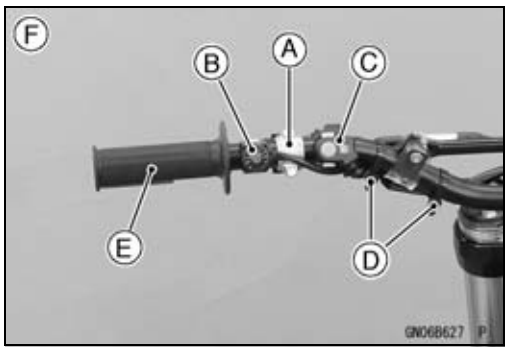

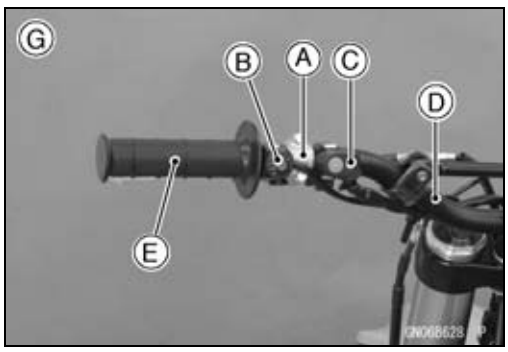

● Remove:
Throttle Grip Assy [A] (see Throttle Cable Replacement in the Fuel System (DFI) chapter)
Front Master Cylinder [B] (see Front Master Cylinder Removal in the Brakes chapter)

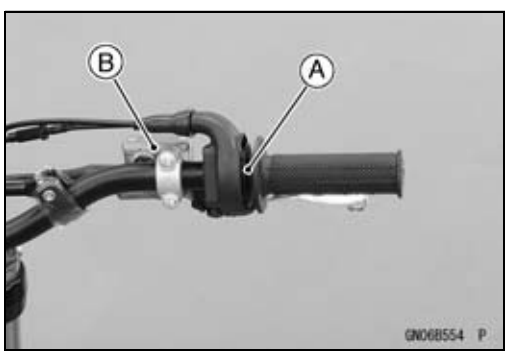

● Remove:
Handlebar Clamp Bolts [A]
Handlebar Clamps [B]
Handlebar [C]
● Check the handlebar for bends or cracks.
★If the handlebar was bended or cracked, replace it.

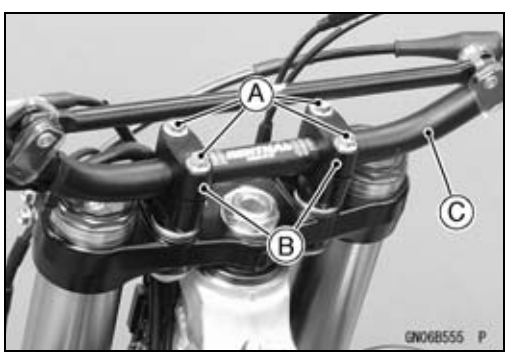

Handlebar

Handlebar Installation

- Apply adhesive cement to the innermost area of the left handlebar grip and all-around inner surface of the left handlebar grip hole entrance and also apply it to the roulette area on the handlebars.
- The left handlebar grip must be installed with the projection [A] upward (KX450FC, KX450FE).
- The left handlebar grip must be installed with the triangle mark [B] upward (KX450FD).

○When installing the left handlebar grip, rotate the grip more than once first, and then remove and install the grip alternately more than three times to spread adhesive cement. Make sure that adhesive cement has been spread evenly.

○After installation, hold the left handlebar grip area at more than three points to make the left handlebar grip stick to the handlebars.

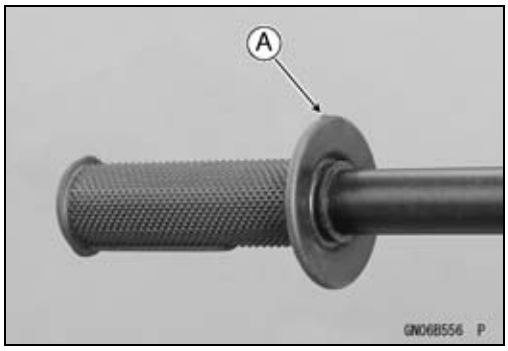

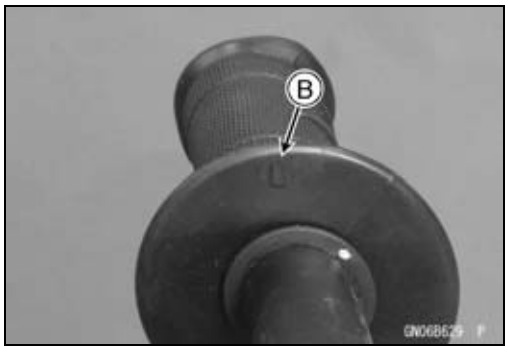

- Install the clutch lever holder assembly [A] as shown in the figure.
  25 ~ 35° [B]
  Horizontal Line of Frame [C]
  170 mm (6.69 in.) [D] (KX450FC)
  160.5 mm (6.32 in.) (KX450FD ~)

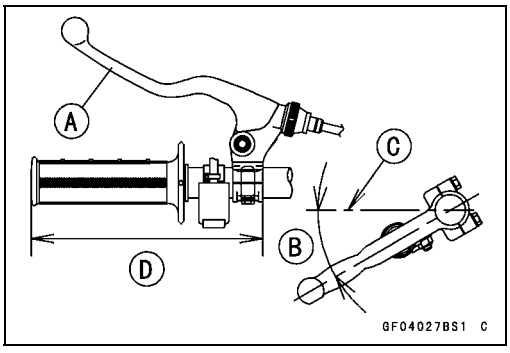

- Install the launch control mode button [A] as shown in the figure.
  Clutch Lever Holder Assembly [B]
  5 ~ 10 mm (0.2 ~ 0.4 in.) [C]
- Install the engine stop switch.
- Run the launch control mode button lead and engine stop switch lead correctly (see Cable, Wire, and Hose Routing section in the Appendix chapter).

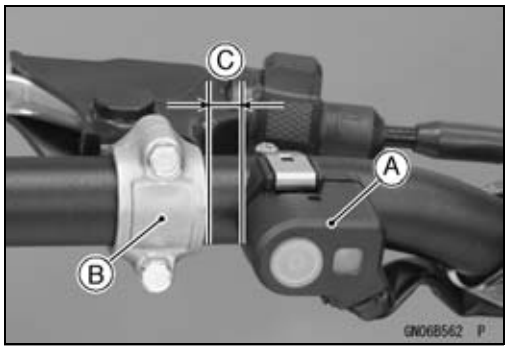

- Apply grease to the throttle cable upper end and clutch cable upper end.
- Apply 2-stroke oil to the edge (slash area) of the handlebar.
  120 mm (4.72 in.) [A]

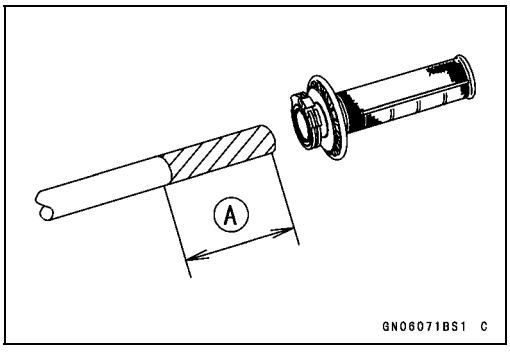

Handlebar

- Install the throttle grip assembly so that the grip [A] is in as far as it will go.
  - ○Position the throttle grip assembly so that the cable gateway [B] of the throttle case is above the handlebar.
- Install the front master cylinder (see Front Master Cylinder Installation in the Brakes chapter).

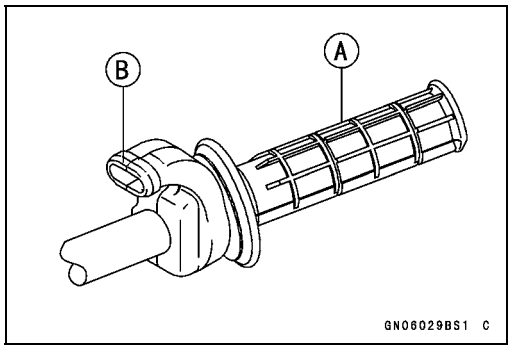

- Install the handlebar [A] on the steering stem head as follows.
  - ○The handlebar angle position can be adjusted to suit your preference using the gauge marks [B].
  - ○Position the handlebar so that the gauge marks is equal positions [C].
    Bridge Bar [D]
- Install the handlebar clamps [E] and handlebar clamp bolts [F].

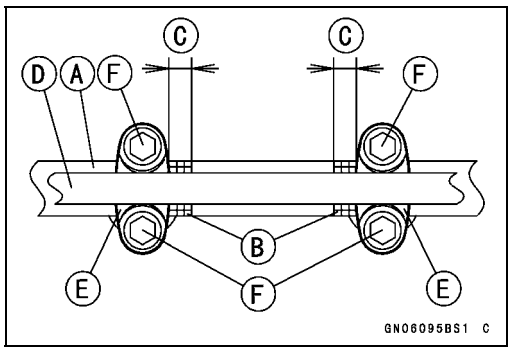

- Tighten the handlebar clamp bolts [A].
  - ○Equalize the front and rear gaps [B].

NOTE

○*Tighten the two clamp bolts alternately two times to ensure even tightening torque.*

Torque - Handlebar Clamp Bolts: 25 N·m (2.5 kgf·m, 18 ft·lb)

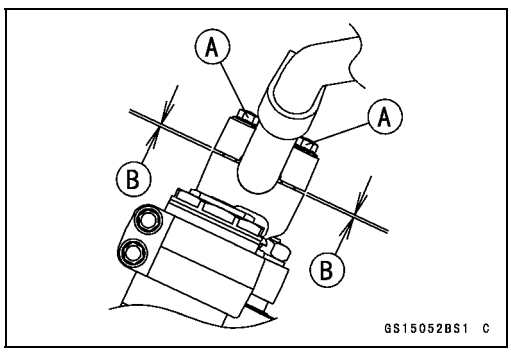

- Install:
  Handlebar Pad [A]
  Fuel Tank Breather Hose [B]
  Number Plate (see Number Plate Installation in the Frame chapter)

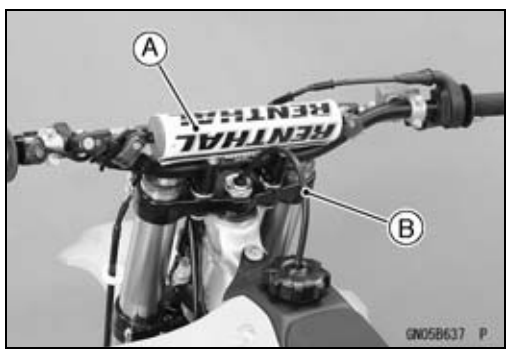

Handlebar Position Adjustment

The handlebar position can be adjusted in four positions back and forth.

Front Holes [A]
Rear Holes [B]
Handlebar holders [C]

To suit various riding positions, the handlebar holder position can be changed and the handlebar can be adjusted by turning the handlebar holders around (180°).

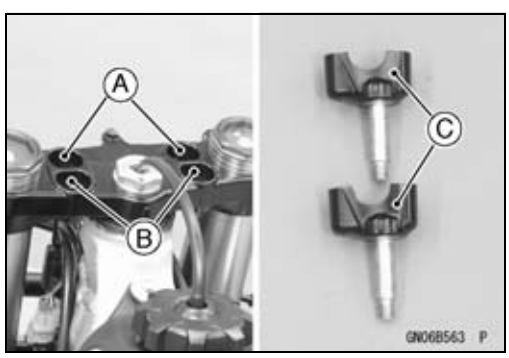

Handlebar

- Remove the handlebar pad.
- Remove the handlebar clamp bolts [A], handlebar clamps [B] and handlebar [C].
- Check the handlebar for damage or cracks.

★If the handlebar is damage or cracks, replace it with a new one.

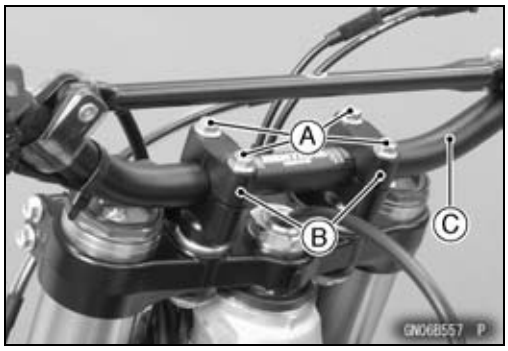

- Remove:
  Handlebar Holder Nuts [A]
  Flat Washers [B]
  Round Washers [C]
  Handlebar Holders [D]
  Dampers [E]

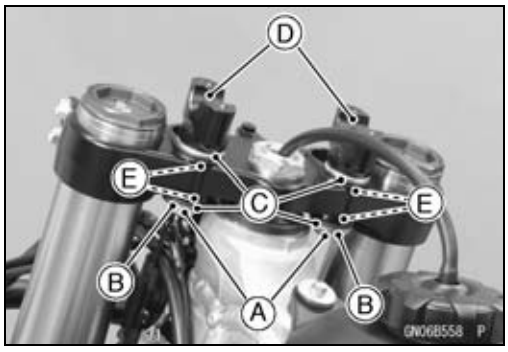

- Select the handlebar position and install the upper and lower dampers [A] into the hole [B] of the steering stem head [C] so that the flat surface [D] of dampers fit the flat surface [E] of the steering stem head hole.

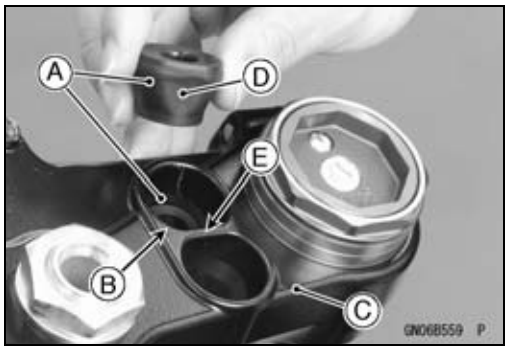

- Install the round washer [A] and handlebar holder [B] in the suitable direction.

○Install the round washer so that the round part fits on the damper.

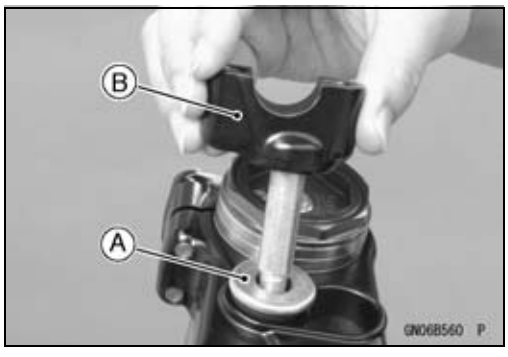

- Put the handlebar [A] on the handlebar holders [B].
- Temporarily install the handlebar clamps [C] and tighten the handlebar clamp bolts [D].
- Replace the handlebar holder nuts [E] with new ones.
- Install the round washers [F], flat washers [G], and handlebar holder nuts .

○Install the round washers so that the round part fits under the dampers.

- Tighten:

Torque - Handlebar Holder Nuts: 34 N·m (3.5 kgf·m, 25 ft·lb)

- Install the handlebar (see Handlebar Installation).

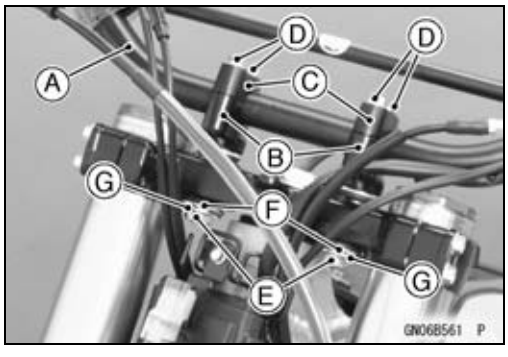

Frame

Table of Contents

Exploded View 15-2
Frame 15-4
- Frame Inspection 15-4
- Rear Frame Removal 15-4
- Rear Frame Installation 15-4
- Engine Guards Removal 15-5
- Engine Guards Installation 15-5

Seat 15-6
- Seat Removal 15-6
- Seat Installation 15-6

Side Covers 15-7
- Side Cover Removal 15-7
- Side Cover Installation 15-7

Radiator Shroud 15-8
- Radiator Shroud Removal 15-8
- Radiator Shroud Installation 15-8

Number Plate 15-9
- Number Plate Removal 15-9
- Number Plate Installation 15-9

Fender 15-10
- Front Fender Removal/Installation 15-10
- Rear Fender Removal/Installation 15-10
- Rear Flap Removal/Installation 15-10

Footpegs 15-11
- Footpeg Removal 15-11
- Footpeg Installation 15-11
- Footpeg Height Adjustment 15-12

Exploded View

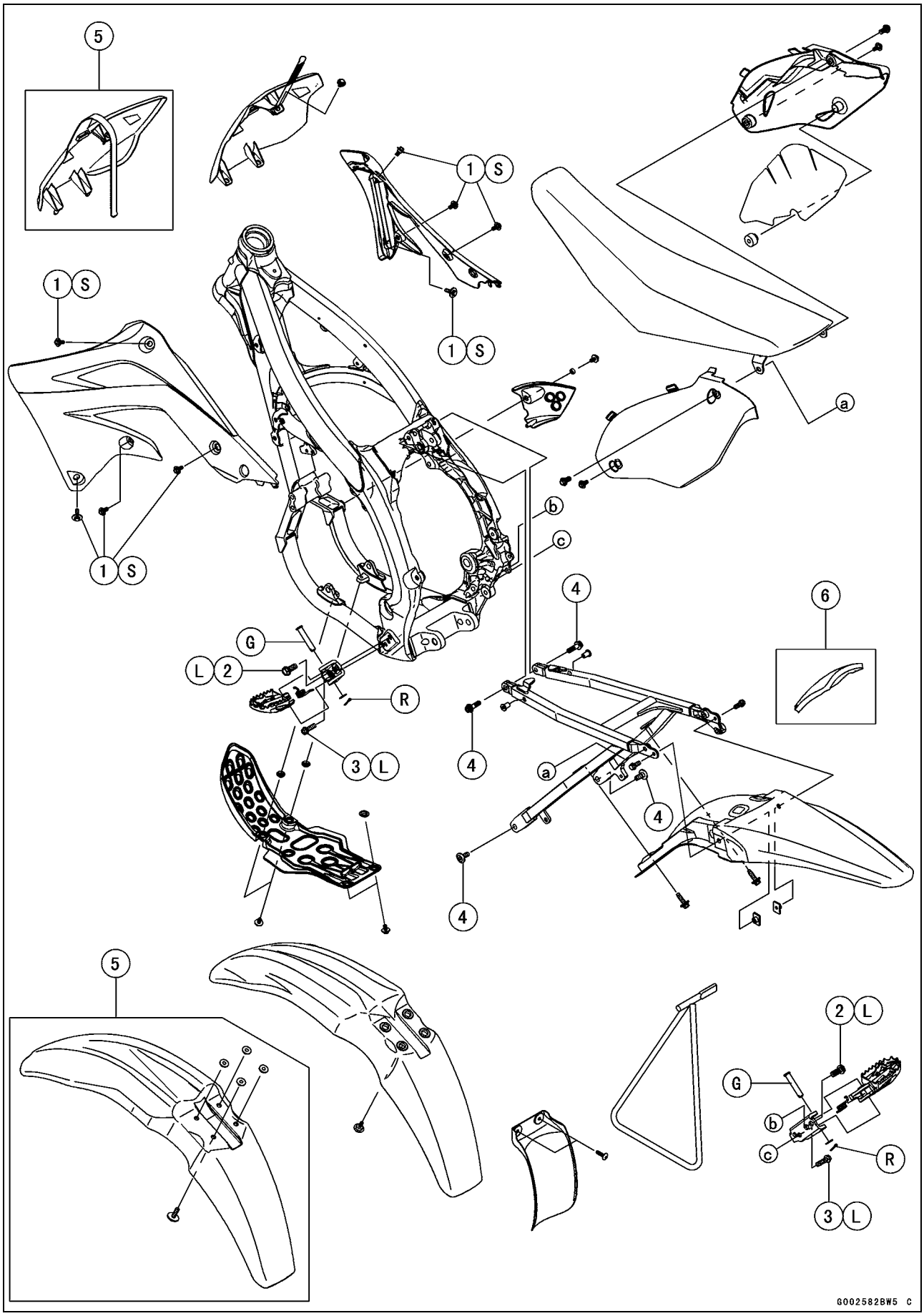

Exploded View

No.	Fastener	Torque			Remarks
		N·m	kgf·m	ft·lb	
1	Radiator Shroud Bolts	9.8	1.0	87 in·lb	S
2	Footpeg Bracket Bolts (Upper)	34	3.5	25	L
3	Footpeg Bracket Bolts (Lower)	16.5	1.68	12.2	L
4	Rear Frame Mounting Bolts	34	3.5	25	

5. KX450FC
6. Other than KX450FC and KX450FD ~ US, CA Models

G: Apply grease.
L: Apply a non-permanent locking agent.
R: Replacement Parts
S: Follow the specified tightening sequence.

Frame

Frame Inspection

- Refer to the Frame Inspection in the Periodic Maintenance chapter.

Rear Frame Removal

- Remove:
  Seat (see Seat Removal)
  Side Covers (see Side Cover Removal)
  Muffler Body (see Muffler Body Removal in the Engine Top End chapter)
  Rear Fender (see Rear Fender Removal)
  Rear Flap (see Rear Flap Removal)
  Intake Air Temperature Sensor Connector [A]

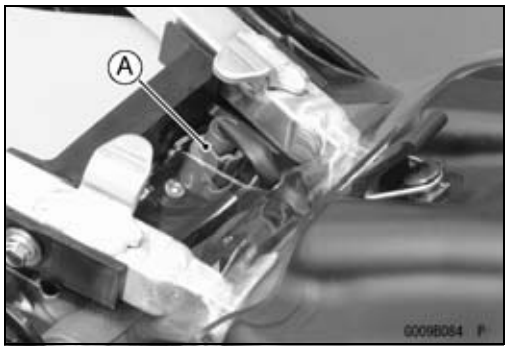

- Loosen the air cleaner duct clamp screw [A].

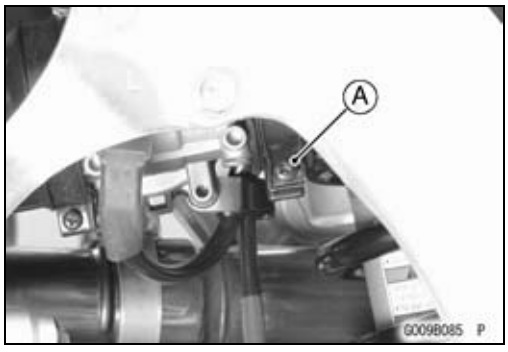

- Remove the rear frame mounting bolts [A] on both sides.
- Take off the rear frame [B] together with the air cleaner housing.

○Separate the air cleaner duct from the throttle body assy.
○Take care not to damage the frame and rear shock absorber with the air cleaner duct clamp.

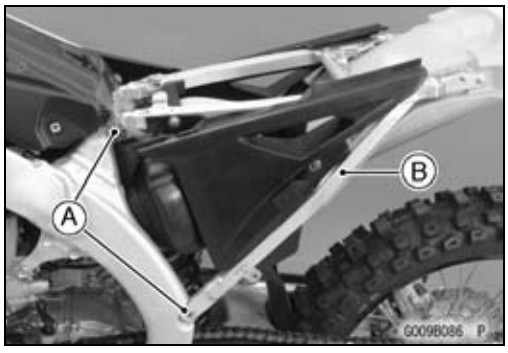

Rear Frame Installation

- Fit the claw [A] of the clamp to the groove [B] of the air cleaner duct.
- Install the rear frame.

○Insert the duct onto the throttle body assy.

- Tighten:

  Torque - Rear Frame Mounting Bolts: 34 N·m (3.5 kgf·m, 25 ft·lb)

- Tighten the air cleaner duct clamp screw.
- Install the removed parts (see appropriate chapters).

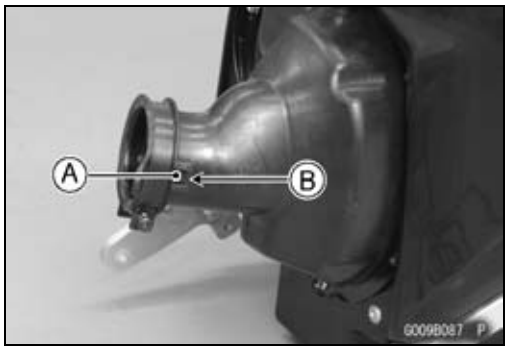

Frame

Engine Guards Removal

● Remove the engine guards as shown in the figure.
Right Engine Guard [A]
Lower Engine Guard [B]
Bolts [C]
Collars [D]

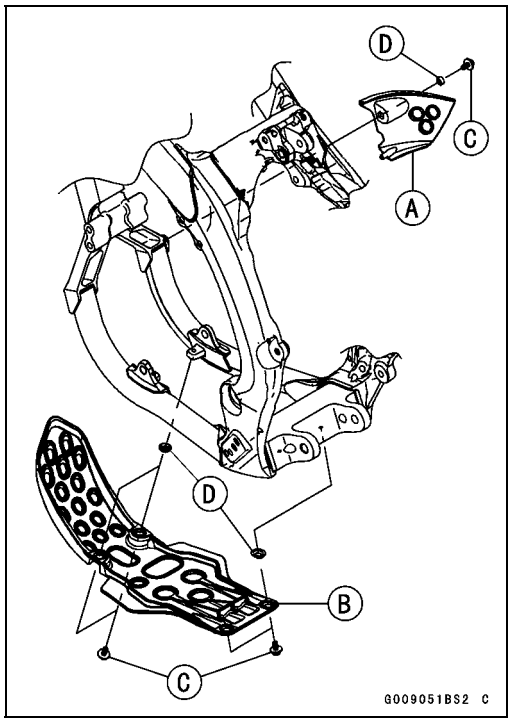

Engine Guards Installation

● Installation is the reverse of removal. Note the following.
○Fit the projection [A] of the right engine guard to the hole [B] of the frame.

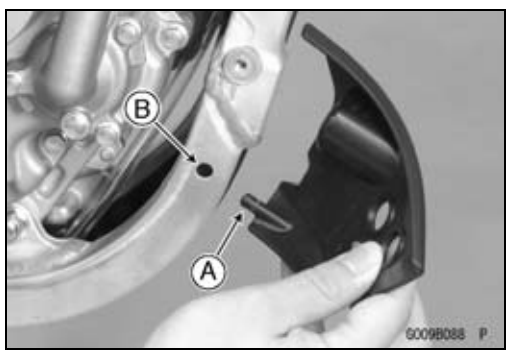

Seat

Seat Removal

● Remove the side cover bolt [A] on both sides.

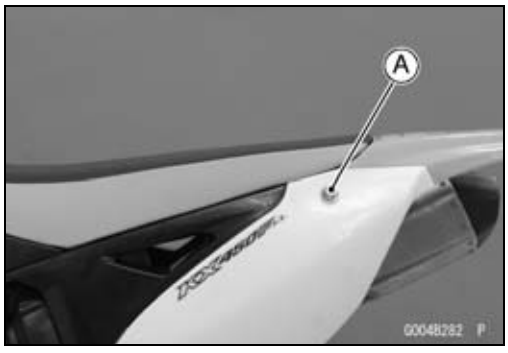

● Spread [A] the side covers lightly.
● Take off the seat [B] backward [C].

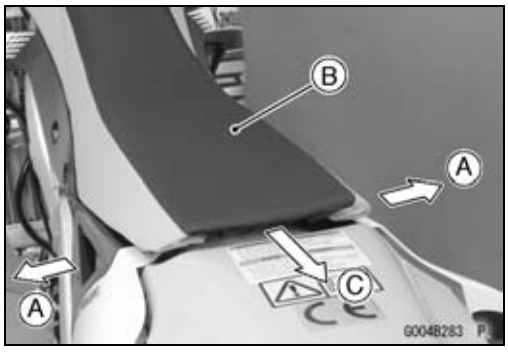

Seat Installation

● Install the seat.
○Insert the hooks [A] of the seat under the flange collar [B] and brackets [C].
○Take care not to damage the side covers with the bracket of seat.
● Tighten the side cover bolts.

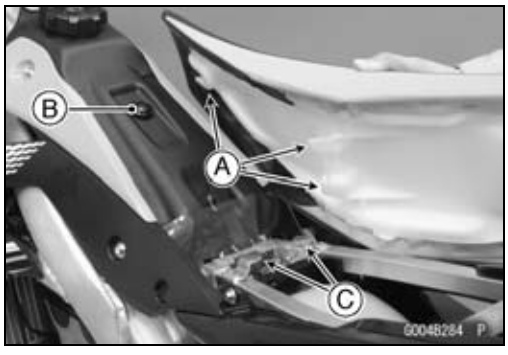

Side Covers

Side Cover Removal

● Remove the bolts [A] and take off the side cover.
○Clear the side cover tabs [B] from the air cleaner housing.

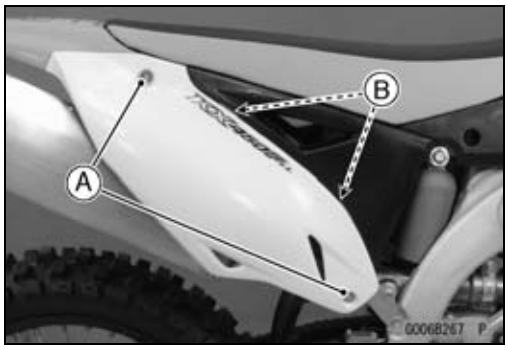

Side Cover Installation

● Stick the pad [A] on the inside of the right side cover.
● Install the damper [B] securely.

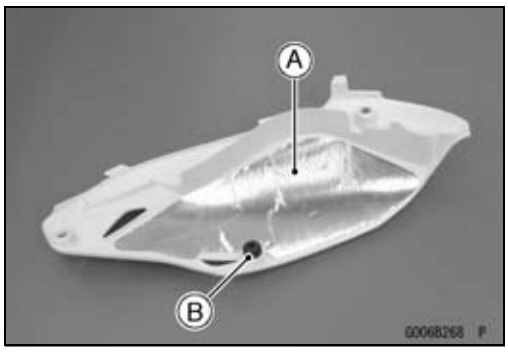

● Install the side covers.
○Insert the tabs [A] of the side cover into the slots [B] of the air cleaner housing.
○Insert the side cover rib [C] between the rear fender [D] and the rear frame [E].
● Tighten the bolts.

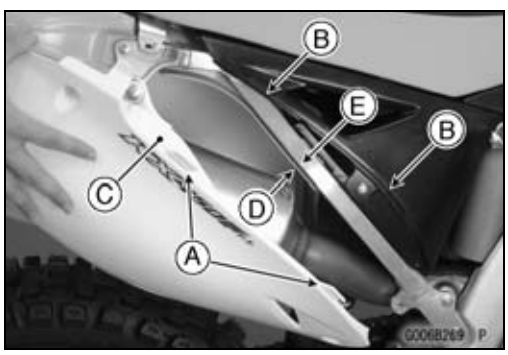

Radiator Shroud

Radiator Shroud Removal

- Remove:
  Bolts [A]
  Radiator Shroud [B]

○Clear the radiator shroud tabs [C] from the air cleaner housing.

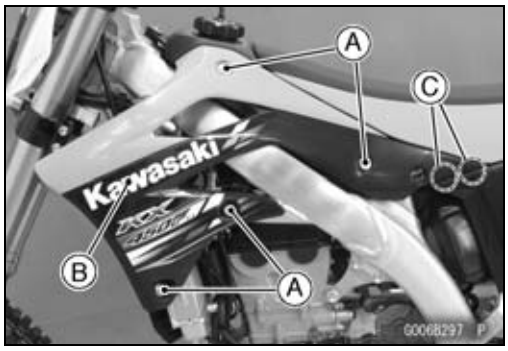

Radiator Shroud Installation

- Install the radiator shrouds.

○Insert the tabs [A] of the radiator shroud into the slots [B] of the air cleaner housing.

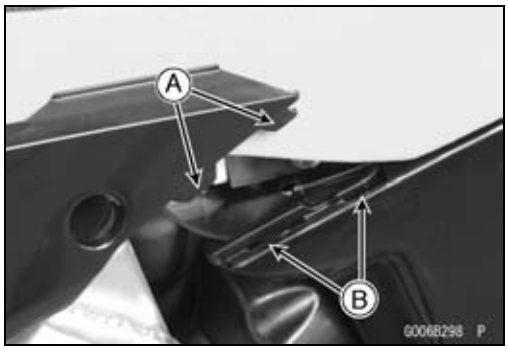

- Temporarily install the bolts as shown sequence [1 ~ 4].
  L = 13 mm (0.51 in.) [1 ~ 3]
  L = 20 mm (0.79 in.) [4]
- Tighten:

Torque - Radiator Shroud Bolts: 9.8 N·m (1.0 kgf·m, 87 in·lb)

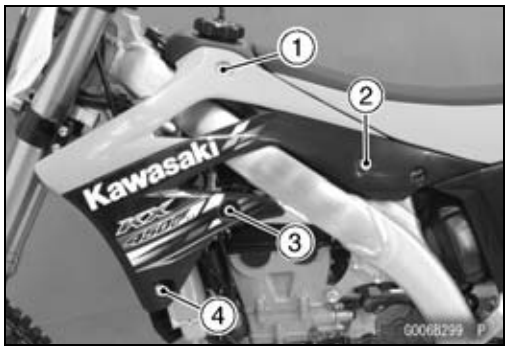

Number Plate

Number Plate Removal

- Unlock the band [A] of the number plate [B].
- Remove the bolt [C].
- Clear the projections [D] and remove the number plate.

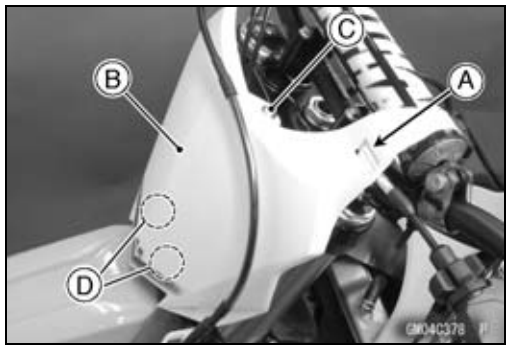

Number Plate Installation

KX450FC

- Insert the projections [A] of the number plate into the holes [B] of the steering stem base.

○Run the brake hose through the front of the number plate.

- Install the band to the handlebar pad, and tighten the bolt.

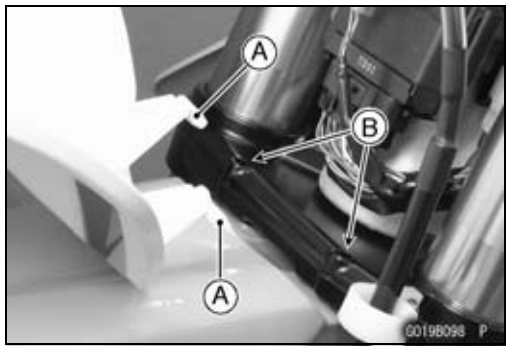

KX450FD ~

- Fit the holes [A] of the number plate and projections [B] of the steering stem base.

○Run the brake hose through the front of the number plate.

- Install the band to the handlebar pad, and tighten the bolt.

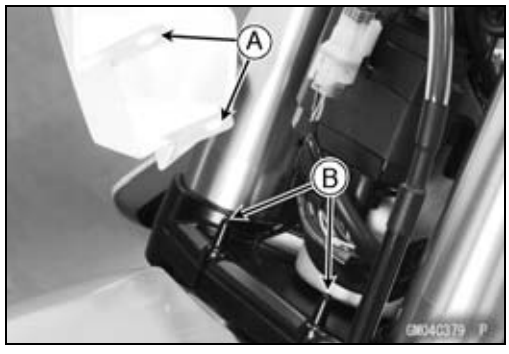

Fender

Front Fender Removal/Installation

- Remove the bolts [A] and take off the front fender.
- Installation is the reverse of removal.

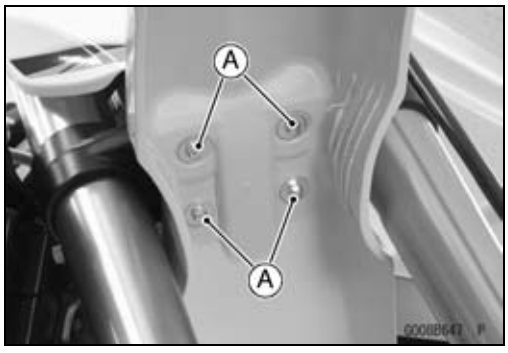

Rear Fender Removal/Installation

- Remove the side covers (see Side Cover Removal).
- Remove the bolts [A].

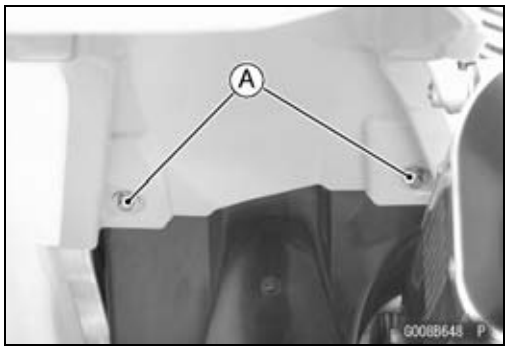

- Remove the bolt [A] on both sides, and take off the rear fender [B].

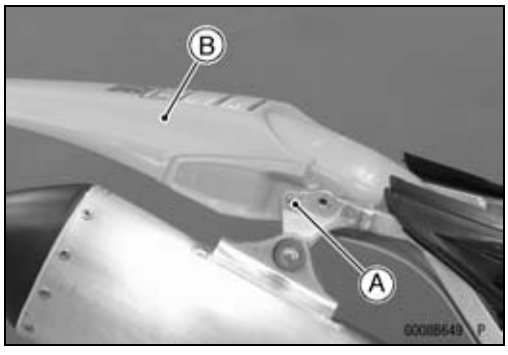

- When installing the pad [A], align the edge of the pad with the line [B] of the rear fender (Other than KX450FC and KX450FD ~ US, CA Models).
- Installation is the reverse of removal.

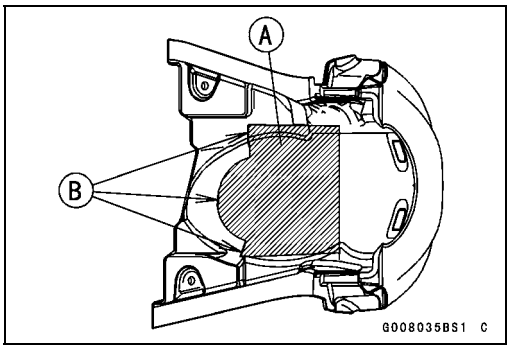

Rear Flap Removal/Installation

- Remove the screws [A] and take off the rear flap [B].
- Installation is the reverse of removal.

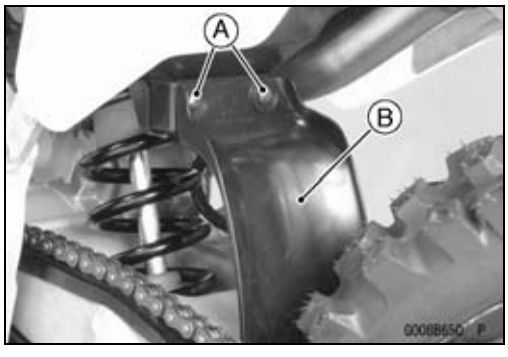

Footpegs

Footpeg Removal

- For the right footpeg removal, remove the brake pedal assy (see Right Engine Cover Removal in the Clutch chapter).
- Remove:
  Cotter Pin [A]
  Washer [B]
  Pivot Pin [C]
  Spring [D]
  Footpeg [E]
  Footpeg Bracket Bolt [F]
  Footpeg Bracket Bolt [G]

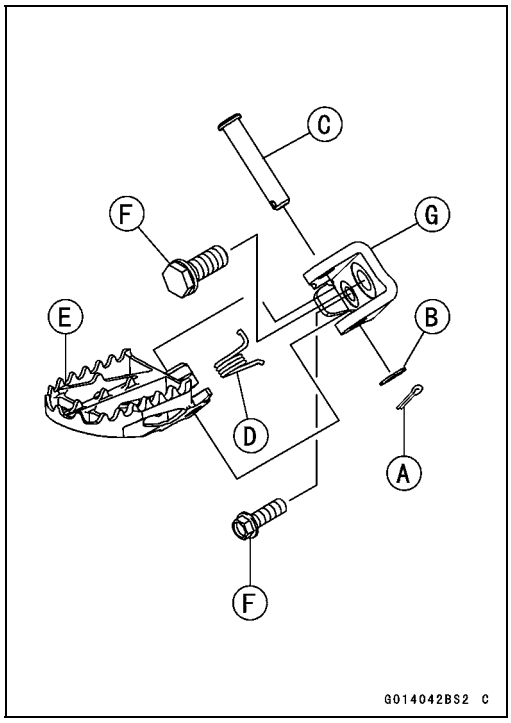

Footpeg Installation

NOTE

○*The footpeg can be adjusted in two positions, refer to the Footpeg Height Adjustment.*

- Replace the cotter pin with a new one.
- Apply a non-permanent locking agent to the footpeg bracket bolts [A].
- Install the footpeg bracket [B], and tighten the bolts.

Torque - Footpeg Bracket Bolt (Upper): 34 N·m (3.5 kgf·m, 25 ft·lb)
Footpeg Bracket Bolt (Lower): 16.5 N·m (1.68 kgf·m, 12.2 ft·lb)

- Apply grease to the pivot pin [C].
- Install the footpeg [D], spring [E] and pivot pin.

○Insert the pivot pin from upper side.

- Install the washer [F] and new cotter pin [G].

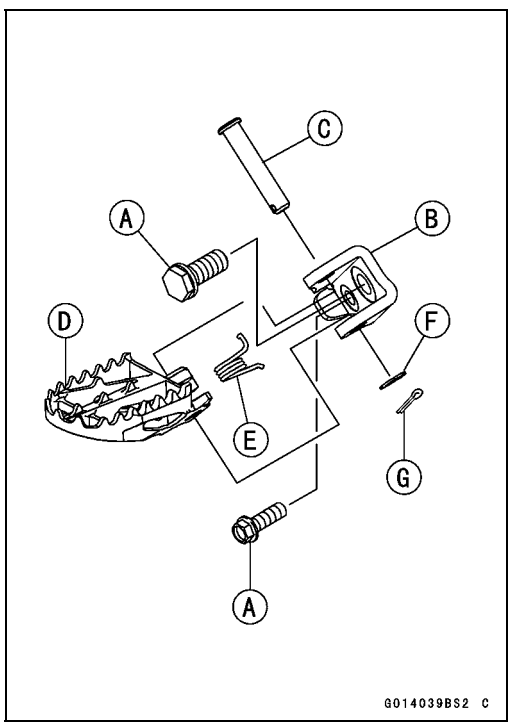

- Bend the longer side [A] of the cotter pin as shown in the figure.

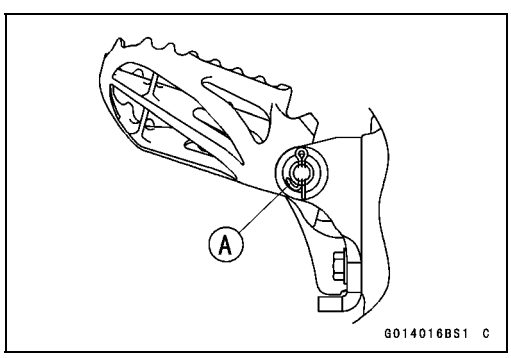

Footpegs

Footpeg Height Adjustment

○The footpeg can be adjusted in two positions.
Footpeg Bracket [A]
Bolts [B]
Bolt Holes [C]
Upper Position [D]
Lower Position [E]

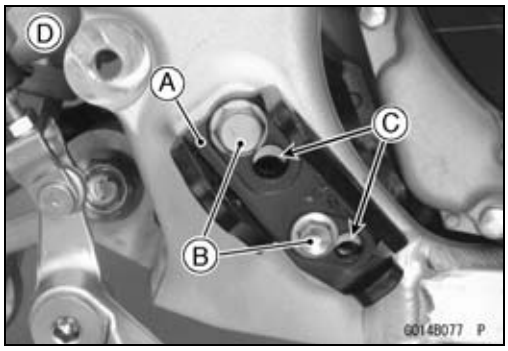

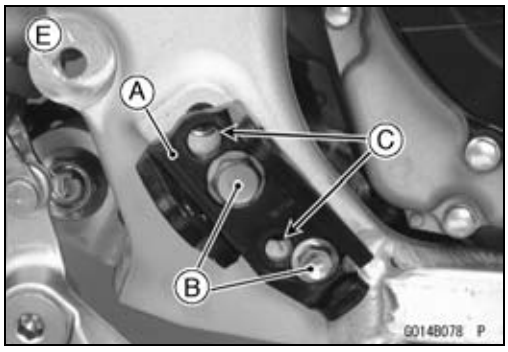

- Remove:
  Footpegs (see Footpeg Removal)
- Adjust the footpeg height.

NOTE

○*Install the footpegs with same height on both sides. Do not ride the motorcycle with footpegs installed unevenly.*
○*Adjust the position of the shift pedal and the brake pedal to suit the rider's preference.*
○*Installing the footpegs in the lower position will reduce the amount of ground clearance and lean angle.*

- Install:
  Footpegs (see Footpeg Installation)

Electrical System

Table of Contents

Exploded View 16-2
Specifications 16-4
Special Tools and Sealant 16-5
Wiring Diagram 16-8
Precautions 16-10
Electrical Wiring 16-11
  Wiring Inspection 16-11
Flywheel Magneto 16-12
  Magneto Cover Removal 16-12
  Magneto Cover Installation 16-12
  Flywheel Removal 16-13
  Flywheel Installation 16-14
  Stator Coil Removal 16-14
  Stator Coil Installation 16-15
  Flywheel Magneto Inspection 16-16
Charging System 16-18
  Regulator/Rectifier Removal 16-18
  Regulator/Rectifier Installation 16-18
  Regulator/Rectifier Output Voltage Inspection 16-18
  Regulator/Rectifier Inspection 16-19
  Capacitor Removal 16-21
  Capacitor Installation 16-21
  Capacitor Inspection 16-21
Ignition Timing 16-22
  Ignition Timing Inspection 16-22
Ignition System 16-23
  Safety Instructions 16-23
  Ignition Coil Removal 16-23
  Ignition Coil Installation 16-23
  Ignition Coil Inspection 16-24
  Spark Plug Cleaning and Inspection 16-25
  Spark Plug Gap Inspection 16-25
  Ignition Coil Primary Peak Voltage Check 16-26
  IC Igniter Inspection 16-26
  Crankshaft Sensor Peak Voltage Check 16-28
  Crankshaft Sensor Inspection 16-28
  Engine Stop Switch System Check 16-29
  Launch Control Mode Button System Check 16-29
  DFI Setting Data Selection Connector Inspection 16-29
Switches 16-31
  Engine Stop Switch Inspection 16-31
  Launch Control Mode Button Inspection 16-31
  Gear Position Switch Removal 16-31
  Gear Position Switch Installation 16-31
  Gear Position Switch Inspection 16-31

Exploded View

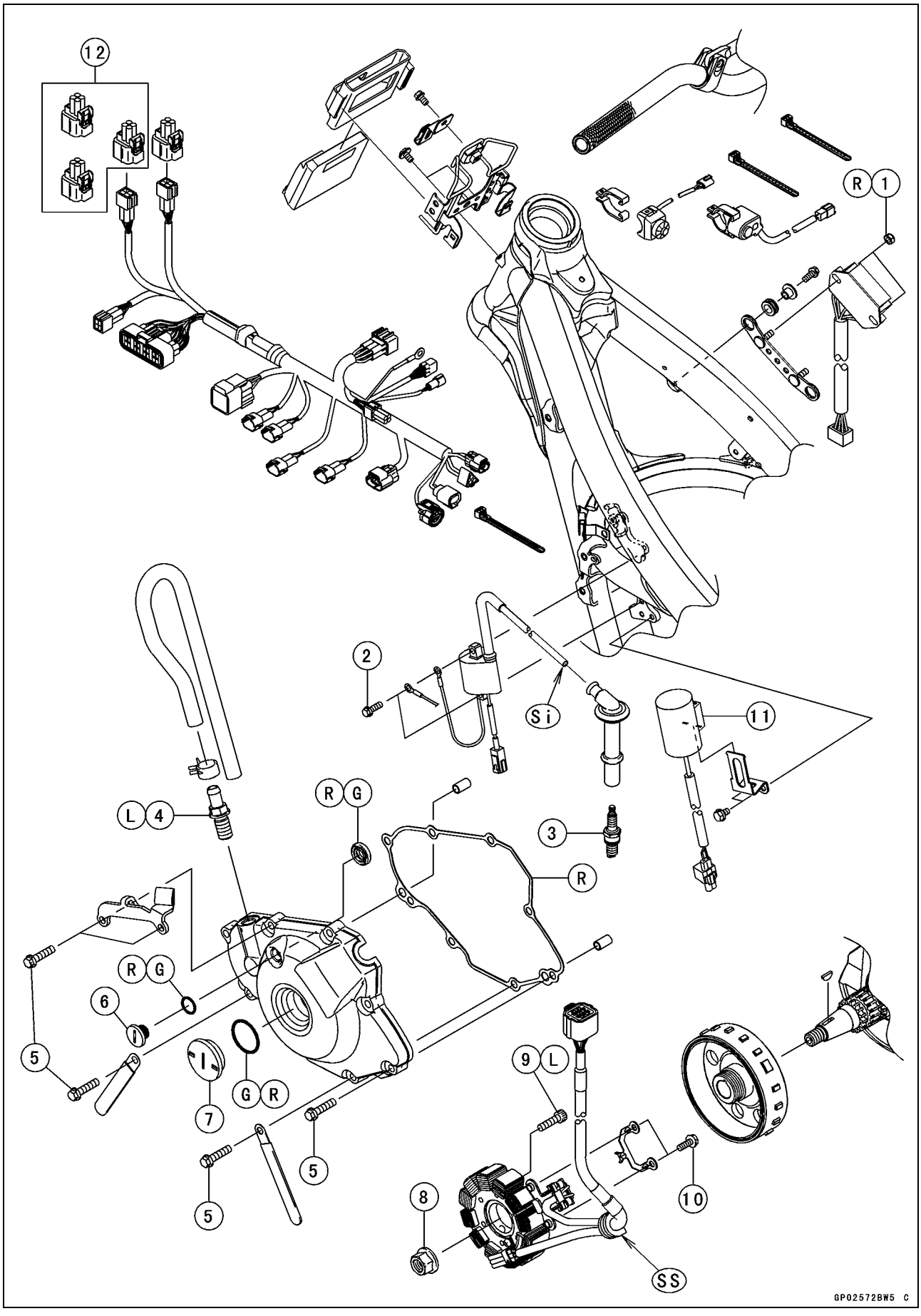

Exploded View

No.	Fastener	Torque			Remarks
		N·m	kgf·m	ft·lb	
1	Regulator/Rectifier Nuts	10	1.0	89 in·lb	R
2	Ignition Coil Bolts	9.8	1.0	87 in·lb	
3	Spark Plug	13	1.3	115 in·lb	
4	Breather Fitting	15	1.5	11	L
5	Magneto Cover Bolts	9.8	1.0	87 in·lb	
6	Timing Inspection Cap	3.5	0.36	31 in·lb	
7	Flywheel Nut Cap	3.5	0.36	31 in·lb	
8	Flywheel Nut	78.5	8.0	57.9	
9	Stator Coil Bolts	9.8	1.0	87 in·lb	L
10	Crankshaft Sensor Bolts	7.0	0.71	62 in·lb	

11. Capacitor
12. DFI Setting Data Selection Connectors

G: Apply grease.
L: Apply a non-permanent locking agent.
R: Replacement Parts
Si: Apply silicone grease.
SS: Apply silicone sealant.

Specifications

Item	Standard
Flywheel Magneto	
Magneto Output Voltage	37 V or more at 4 000 r/min (rpm)
Stator Coil Resistance	0.4 ~ 1.1 Ω at 20°C (68°F)
Charging System	
Charging Voltage (Regulator/Rectifier Output Voltage)	14.0 ~ 14.5 V
Capacitor Internal Resistance	see text
Ignition System	
Ignition Timing	10° BTDC at 2 000 r/min (rpm)
Ignition Coil:	
3 Needle Arcing Distance	7 mm (0.26 in.) or more
Primary Winding Resistance	0.28 ~ 0.38 Ω at 20°C (68°F)
Secondary Winding Resistance	7.65 ~ 10.4 kΩ at 20°C (68°F)
Primary Peak Voltage	120 V or more
Crankshaft Sensor Resistance	180 ~ 280 Ω at 20°C (68°F)
Crankshaft Sensor Peak Voltage	3 V or more
Spark Plug:	
Type	NGK CPR8EB-9
Gap	0.8 ~ 0.9 mm (0.03 ~ 0.04 in.)

Special Tools and Sealant

Bearing Driver Set:
57001-1129

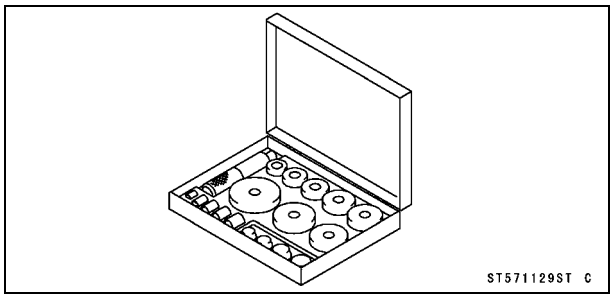

Rotor Puller, M16/M18/M20/M22 × 1.5:
57001-1216

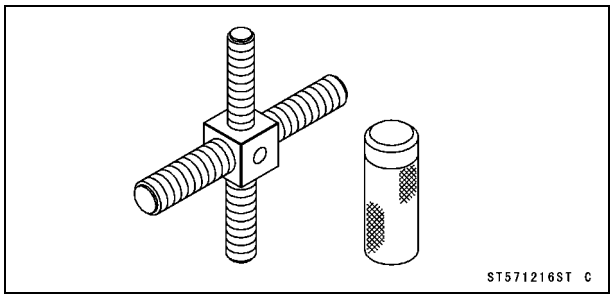

Timing Light:
57001-1241

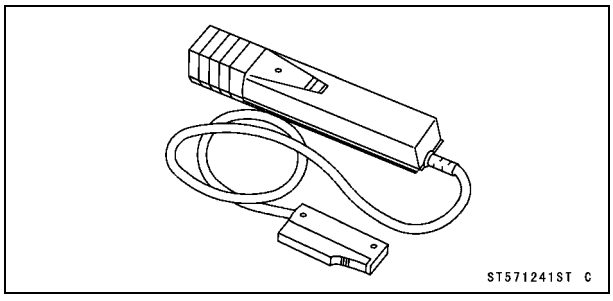

Hand Tester:
57001-1394

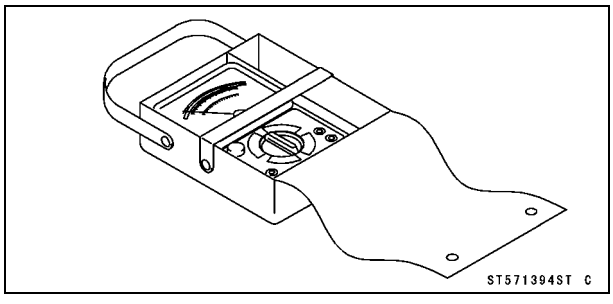

Peak Voltage Adapter:
57001-1415

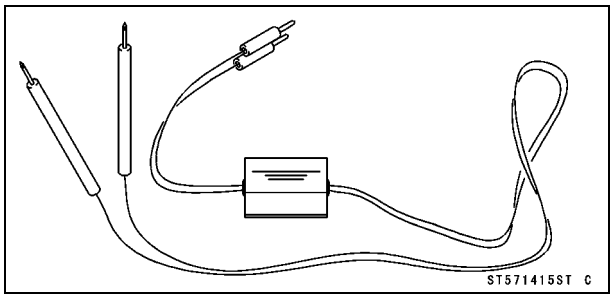

Filler Cap Driver:
57001-1454

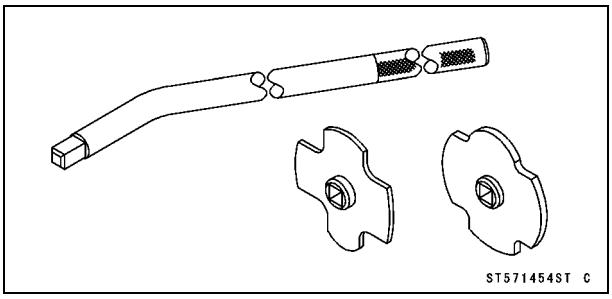

Needle Adapter Set:
57001-1457

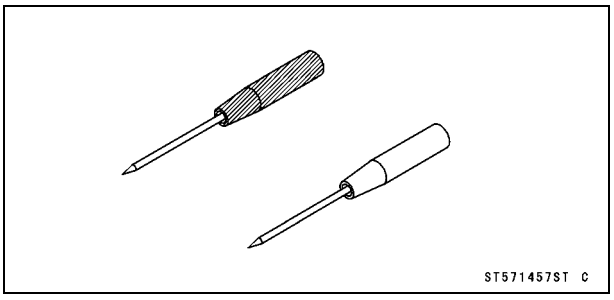

Flywheel Puller, M28 × 1.0:
57001-1471

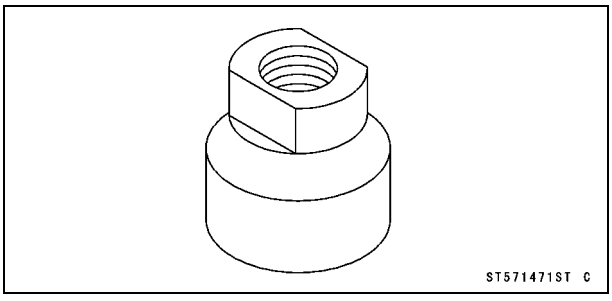

Grip:
57001-1591

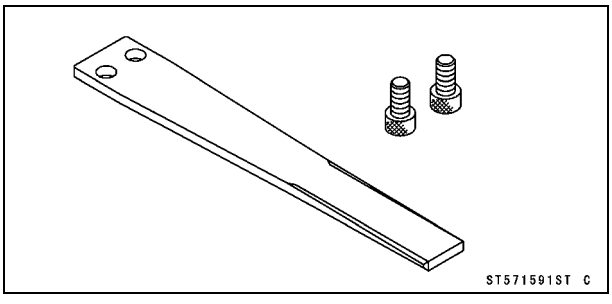

Rotor Holder:
57001-1730

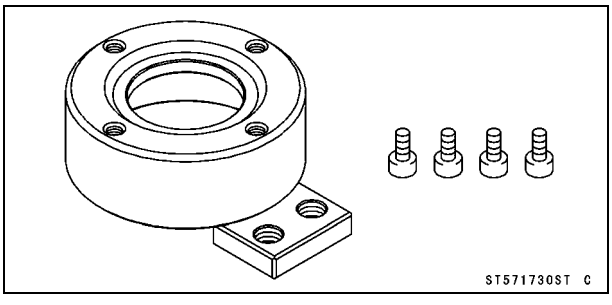

Special Tools and Sealant

Liquid Gasket, TB1211F:
92104-0004

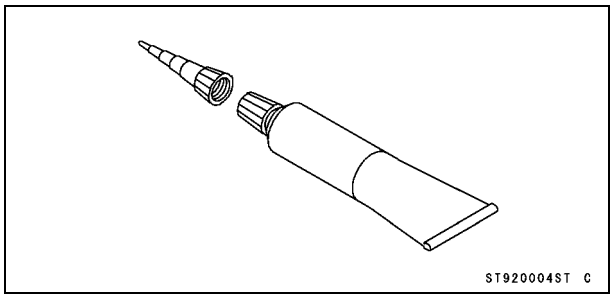

Special Tools and Sealant

This page intentionally left blank.

Wiring Diagram

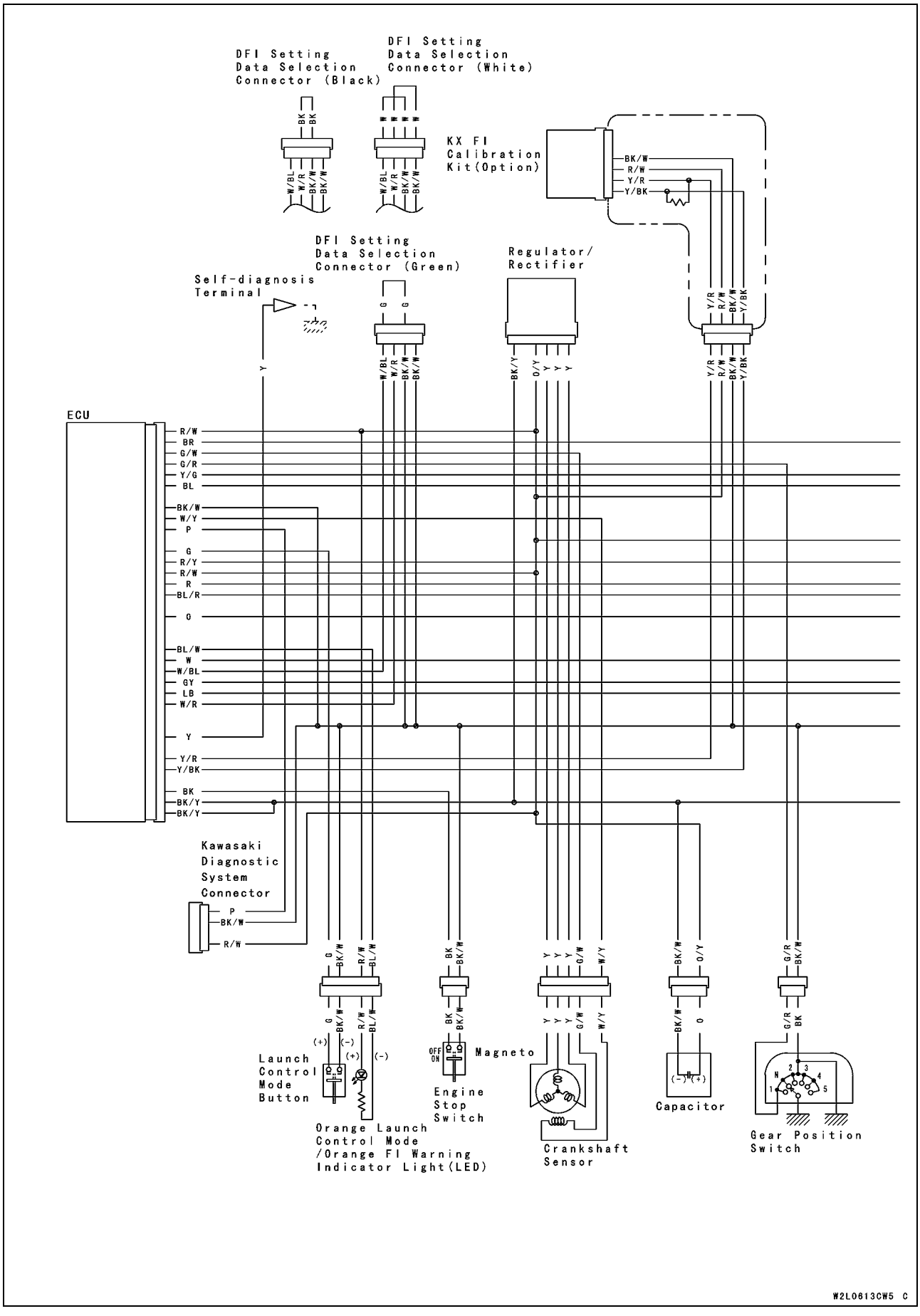

Wiring Diagram

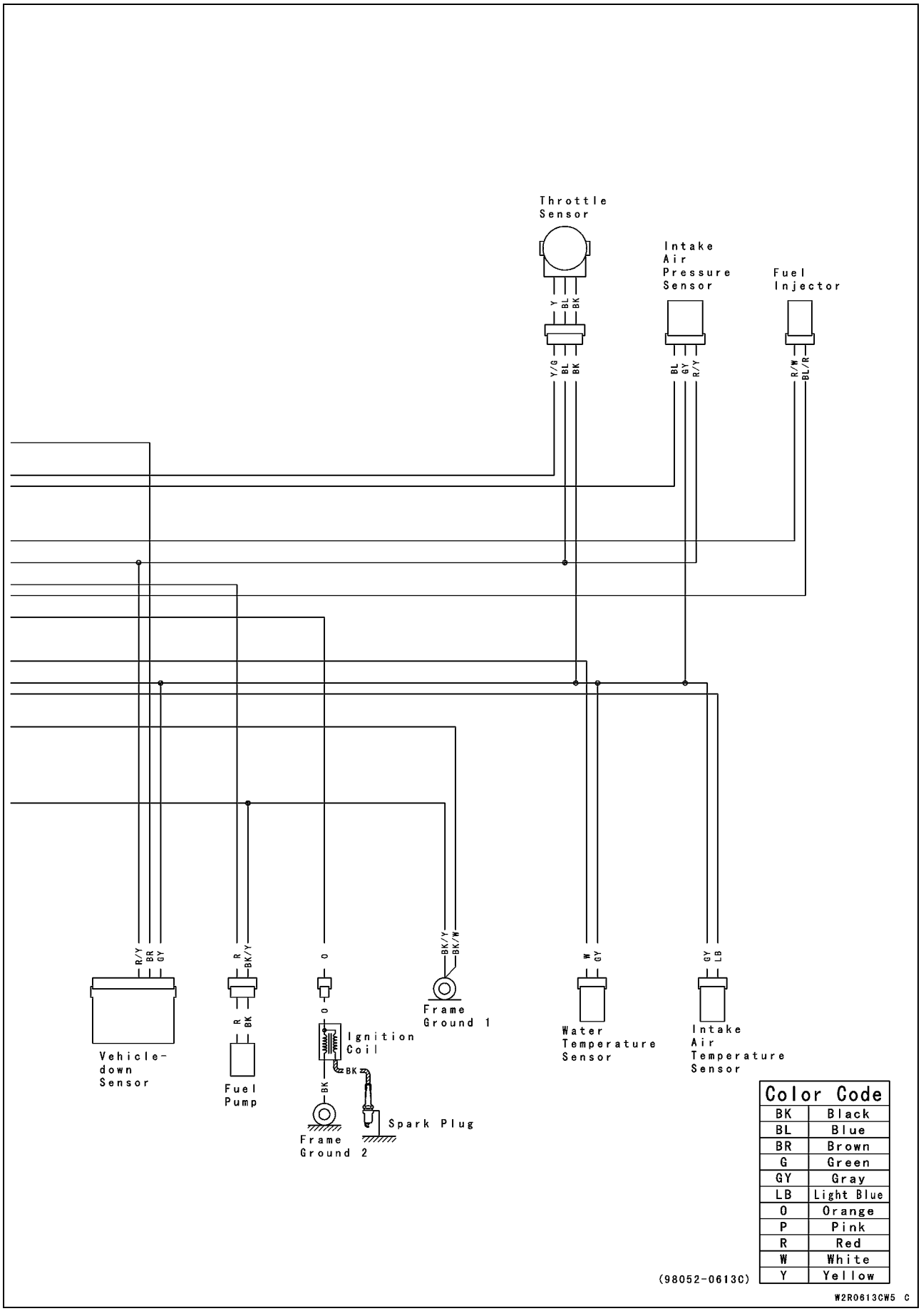

Color Code	
BK	Black
BL	Blue
BR	Brown
G	Green
GY	Gray
LB	Light Blue
O	Orange
P	Pink
R	Red
W	White
Y	Yellow

Precautions

There are numbers of important precautions that are musts when servicing electrical systems. Learn and observe all the rules below.

- The electrical parts should never be struck sharply, as with a hammer, or allowed to fall on a hard surface. Such a shock to the parts can damage them.
- To prevent damage to electrical parts, do not disconnect any electrical connections while the engine is running.
- Troubles may involve one or in some cases all items. Never replace a defective part without determining what CAUSED the failure. If the failure was caused by some other item or items, they too must be repaired or replaced, or the new replacement will soon fail again.
- Make sure all connectors in the circuit are clean and tight, and examine leads for signs of burning, fraying, etc. Poor leads and bad connections will affect electrical system operation.
- Measure coil and winding resistance when the part is cold (at room temperature).

Electrical Wiring

Wiring Inspection

- Visually inspect the wiring for signs of burning, fraying, etc.

★If any wiring is poor, replace the damaged wiring.

- Pull each connector [A] apart and inspect it for corrosion, dirt, and damage.

★If the connector is corroded or dirty, clean it carefully. If it is damaged, replace it.

- Check the wiring for continuity.

○Use the wiring diagram to find the ends of the lead which is suspected of being a problem.

○Connect a digital meter between the ends of the leads.

○Set the digital meter, and read the digital meter.

★If the digital meter does not read 0 Ω, the lead is defective. Replace the lead or the wiring harness if necessary.

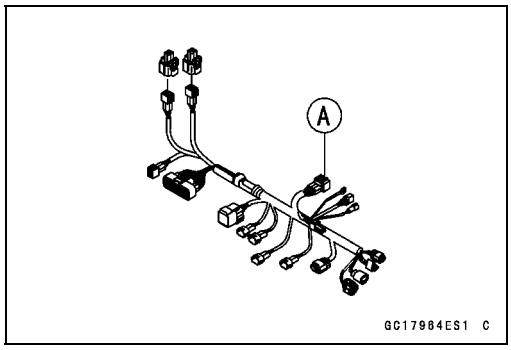

Flywheel Magneto

Magneto Cover Removal

- Drain the engine oil (see Engine Oil Change in the Periodic Maintenance chapter).
- Remove:
  Left Radiator Shroud (see Radiator Shroud Removal in the Frame chapter)
  Shift Pedal (see Shift Pedal Removal in the Crankshaft/Transmission chapter)
- Disconnect the magneto lead connector [A] from the main harness.

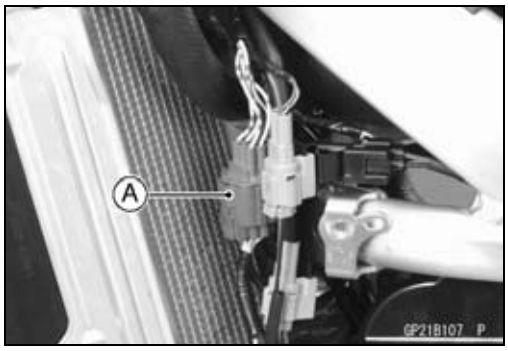

- Remove the band [A].
- Open the clamps [B] then free the breather hose [C] and gear position switch lead [D].
- Remove:
  Magneto Cover Bolts [E]
  Magneto Cover [F]

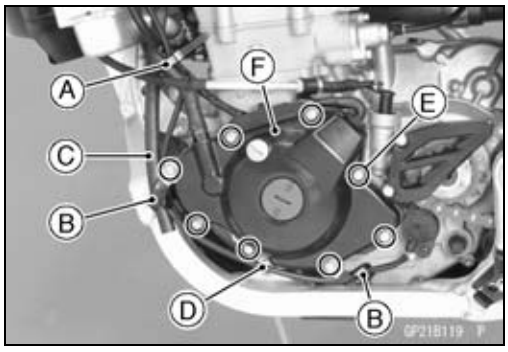

Magneto Cover Installation

- Replace the gasket [A] with a new one and install it.
- Be sure to install the dowel pins [B].

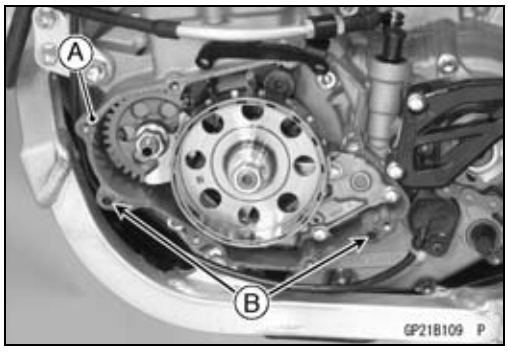

- Using a high flash-point solvent, clean off any oil or dirt that may be on the silicone sealant coating area. Dry them with a clean cloth.
- Apply silicone sealant to the area [A] to the magneto lead grommet.

  Sealant - Liquid Gasket, TB1211F: 92104-0004

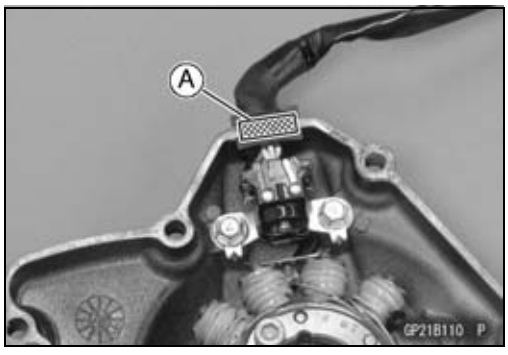

- When installing the balancer shaft oil seal [A], note the following.

○Replace the balancer shaft oil seal with a new one.

○Press the balancer shaft oil seal so that the magneto cover end [B] is flushed as shown in the figure.

Special Tool - Bearing Driver Set: 57001-1129

○Apply grease to the oil seal lips.

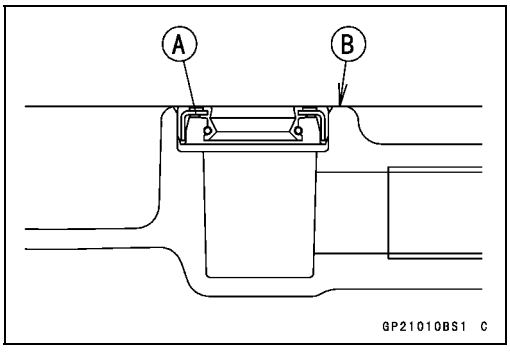

Flywheel Magneto

- When installing the breather fitting [A], note the following.
  - ○Apply a non-permanent locking agent to the threads of the breather fitting.
  - ○Tighten:

    Torque - Breather Fitting: 15 N·m (1.5 kgf·m, 11 ft·lb)

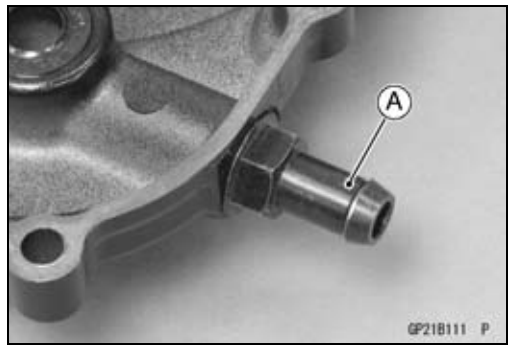

- Install:
  Magneto Cover [A]
  Holder [B]
  Clamps [C]
  Magneto Cover Bolts [D]
- Tighten:

  Torque - Magneto Cover Bolts: 9.8 N·m (1.0 kgf·m, 87 in·lb)
- Run the magneto lead, breather hose and gear position switch lead according to the Cable, Wire, and Hose Routing section in the Appendix chapter.
- Connect the magneto lead connector.
- Install the removed parts (see appropriate chapters).

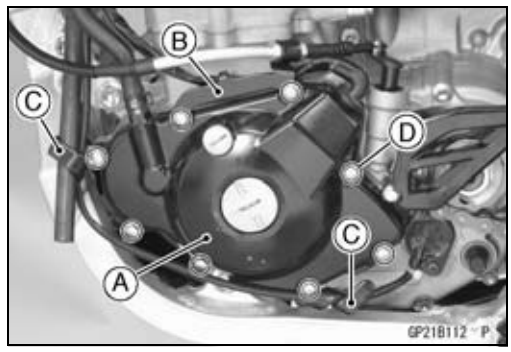

Flywheel Removal

- Remove the magneto cover (see Magneto Cover Removal).
- Hold the flywheel steady with the rotor holder [A], and remove the flywheel nut [B].

  Special Tools - Grip [C]: 57001-1591
  Rotor Holder: 57001-1730
- Remove the rotor holder.

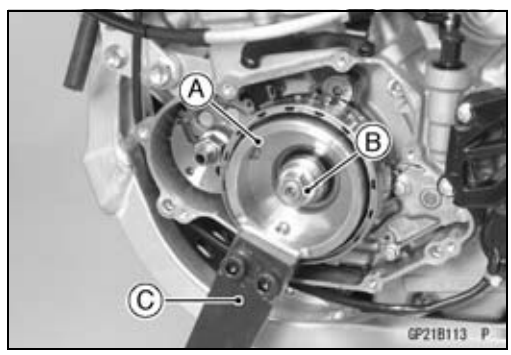

- Install the flywheel puller [A] to the flywheel.
- Install the rotor puller [B] to the flywheel puller.
- Remove the flywheel from the crankshaft by turning in the rotor puller and tapping the head of the puller lightly with a hammer, while holding the puller body steady. There is a woodruff key in the crankshaft tapered portion.

  Special Tools - Rotor Puller, M16/M18/M20/M22 × 1.5: 57001-1216
  Flywheel Puller, M28 × 1.0: 57001-1471

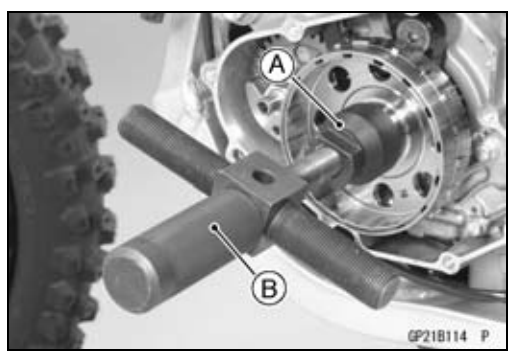

NOTICE
Never strike the grab bar or the flywheel itself. Striking the bar can bond it. If the flywheel is struck, the magnets may lose their magnetism.

- Remove:
  Woodruff Key

Flywheel Magneto

Flywheel Installation

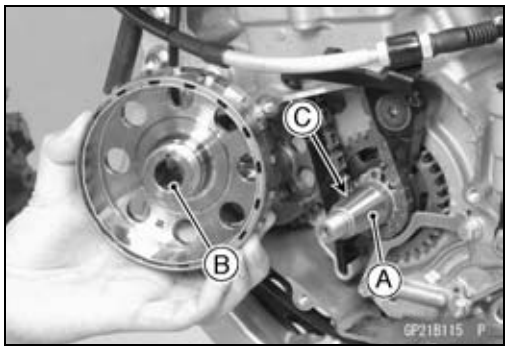

- Using a high flash-point solvent, clean off any oil or dirt on the following portions and dry them with a clean cloth.
  Crankshaft Tapered Portion [A]
  Flywheel Tapered Portion [B]
- Fit the woodruff key [C] securely in the slot of the crankshaft.
- Install the flywheel according to the following procedures.

NOTE

○*Confirm the flywheel fit or not to the crankshaft before tightening it with specified torque.*

○Install the flywheel.
○Hold the flywheel steady with the rotor holder, and tighten the flywheel nut with 55 N·m (5.6 kgf·m, 41 ft·lb) of torque.

Special Tools - Grip: 57001-1591
Rotor Holder: 57001-1730

○Remove the flywheel nut.
○Check the tightening torque with rotor puller and a bolt (M16/P1.5, L = 50 mm (2.0 in.) or more).

Special Tool - Flywheel Puller, M28 × 1.0: 57001-1471

★If the flywheel is not pulled out with 20 N·m (2.0 kgf·m, 15 ft·lb) of drawing torque, it is installed correctly.
★If the flywheel is pulled out with under 20 N·m (2.0 kgf·m, 15 ft·lb) of drawing torque, clean off any oil dirt or flaw of the crankshaft and flywheel tapered portion, and dry them with a clean cloth. Then, confirm that it is not pulled out with above torque.

- Hold the flywheel steady with the rotor holder, and tighten the flywheel nut.

Special Tools - Grip: 57001-1591
Rotor Holder: 57001-1730

Torque - Flywheel Nut: 78.5 N·m (8.0 kgf·m, 57.9 ft·lb)

- Install the magneto cover (see Magneto Cover Installation).

Stator Coil Removal

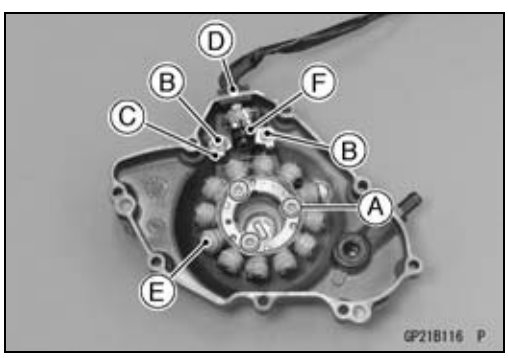

- Remove:
  Magneto Cover (see Magneto Cover Removal)
  Stator Coil Bolts [A]
  Crankshaft Sensor Bolts [B]
  Holder [C]
  Magneto Lead Grommet [D]
- Remove the stator coil [E] and crankshaft sensor [F] as a set.

Flywheel Magneto

Stator Coil Installation

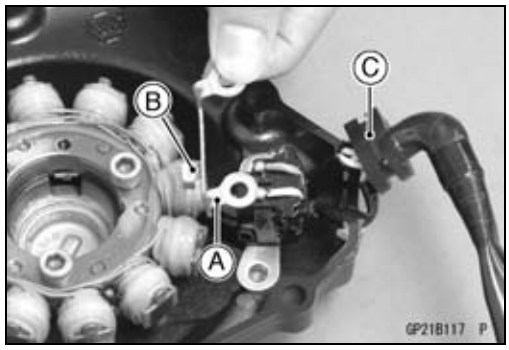

- Apply a non-permanent locking agent to the threads of the stator coil bolts.
- Install the stator coil and crankshaft sensor as a set.
- Tighten:

  Torque - Stator Coil Bolts: 9.8 N·m (1.0 kgf·m, 87 in·lb)

- Install the holder [A] and tighten the crankshaft sensor bolts.

○Hold the magneto lead with the guide [B] of the wiring holder.

  Torque - Crankshaft Sensor Bolts: 7.0 N·m (0.71 kgf·m, 62 in·lb)

- Using a high flash-point solvent, clean off any oil or dirt that may be on the silicone sealant coating area. Dry them with a clean cloth.
- Apply silicone sealant to the circumference of the magneto lead grommet [C], and fit the grommet into the notch of the cover securely.

  Sealant - Liquid Gasket, TB1211F: 92104-0004

- Install the magneto cover (see Magneto Cover Installation).

Flywheel Magneto

Flywheel Magneto Inspection

There are three types of magneto problems: short, open (lead burned out), or loss in flywheel magnetism. A short or open in one of the coil leads will result in either a low output, or no output at all. A loss in flywheel magnetism, which may be caused by dropping or hitting the flywheel by leaving it near an electromagnetic field, or just by aging, will result in low output.

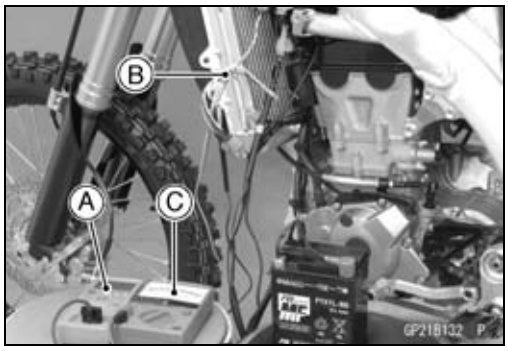

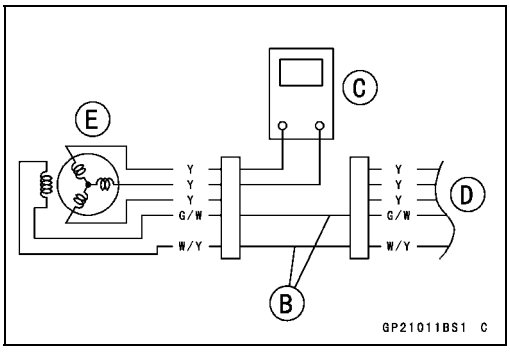

NOTE

○*Be sure the prepared battery is fully charged.*

- Check the magneto output voltage, do the following procedures.

○Remove the left radiator shroud (see Radiator Shroud Removal in the Frame chapter).
○Disconnect the magneto lead connector (see Magneto Cover Removal).
○Use the engine revolution tester [A] for high accuracy.
○Connect the measuring adapter [B] between the disconnected connectors.
○Connect a tester [C] to the magneto lead connector.
Main Harness [D]
Flywheel [E]

Special Tool - Measuring Adapter: 57001-1700

○Refer to the Self-diagnosis Procedures in the Fuel System (DFI) chapter, connect the 12 V battery to the main harness.
○Start the engine.
○Run it at the rpm given in the table 1.
○Note the voltage readings (total 3 measurements).

Table 1 Magneto Output Voltage **at 4 000 r/min (rpm)**

Connections		Reading
Tester (+) to	Tester (–) to	
One yellow lead	Another yellow lead	AC 37 V or more

★If the output voltage shows the value in the table, the magneto operates properly.
★If the output voltage shows a much lower reading than that given in the table indicates that the magneto is defective.

- To check the stator coil resistance as follows.

○Stop the engine.
○Connect the tester as shown in the table 2.
○Note the resistance readings (total 3 measurements).

Table 2 Stator Coil Resistance **at 20°C (68°F)**

Connections		Reading
Tester (+) to	Tester (–) to	
One yellow lead	Another yellow lead	0.4 ~ 1.1 Ω

Flywheel Magneto

★If there is more resistance than shown in the table, or no tester reading (infinity), the stator has an open lead and must be replaced. Much less than this resistance means the stator is shorted, and must be replaced.

● Using the highest resistance range of the tester, measure the resistance between each leads and chassis ground.

★Any tester reading less than infinity (∞) indicates a short, necessitating stator replacement.

★If the stator coil has normal resistance, but the voltage check showed the magneto to be defective; then the flywheel have probably weakened, and the flywheel must be replaced.

Regulator/Rectifier Removal

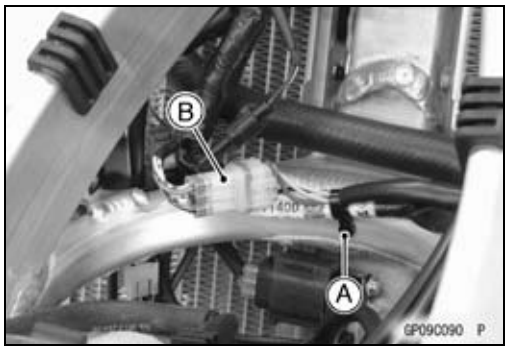

- Remove:
  Fuel Tank (see Fuel Tank Removal in the Fuel System (DFI) chapter)
- Open the clamp [A], and free the leads.
- Disconnect the regulator/rectifier lead connector [B].

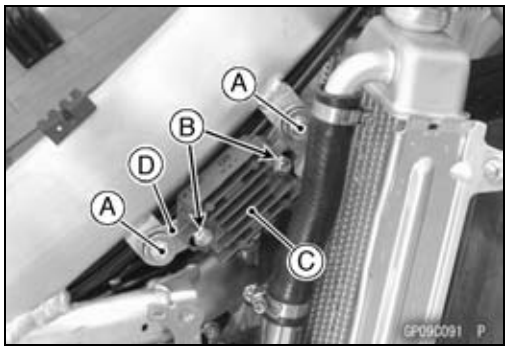

- Remove:
  Regulator/Rectifier Bracket Bolts [A]
  Regulator/Rectifier Nuts [B]
  Regulator/Rectifier [C]
  Bracket [D]

Regulator/Rectifier Installation

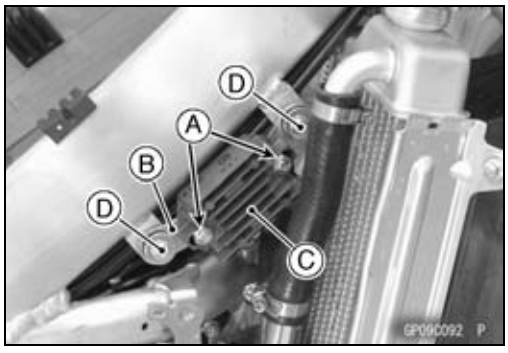

- Replace the regulator/rectifier nuts [A] with new ones.
- Assemble:
  Bracket [B]
  Regulator/Rectifier [C]
- Tighten:

  Torque - Regulator/Rectifier Nuts: 10 N·m (1.0 kgf·m, 89 in·lb)

- Tighten the regulator/rectifier bracket bolts [D].
- Run the regulator/rectifier lead according to the Cable, Wire, and Hose Routing section in the Appendix chapter.
- Connect the regulator/rectifier lead connector.
- Install the fuel tank (see Fuel Tank Installation in the Fuel System (DFI) chapter).

Regulator/Rectifier Output Voltage Inspection

NOTE

○*Be sure the prepared battery is fully charged.*

Charging System

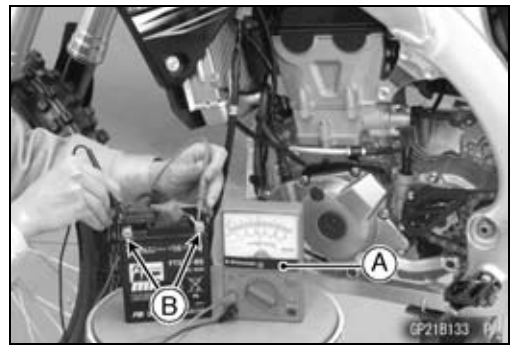

- Connect the 12 V battery to the main harness (see Self -diagnosis Procedures in the Fuel System (DFI) chapter).
- Connect a tester [A] to the battery terminals [B].
- Start the engine, and note the voltage readings at various engine speeds. But they must be kept the specified voltage.

Charging Voltage

Connections		Reading
Tester (+) to	Tester (–) to	
Battery (+)	Battery (–)	DC 14.0 ~ 14.5 V

- Stop the engine.

★If the charging voltage is kept between the values given in the table, the charging system is considered to be working normally.

★If the charging voltage is much higher than the values specified in the table, the regulator/rectifier is defective or the regulator/rectifier leads are loose or open.

★If the charging voltage does not rise as the engine speed increases, then the regulator/rectifier is defective or the magneto output is insufficient for the loads. Check the magneto and regulator/rectifier to determine which part is defective.

Regulator/Rectifier Inspection

- Remove:
  Regulator/Rectifier (see Regulator/Rectifier Removal)
- Set the hand tester to the × 1 kΩ range and make the measurements shown in the table.

  Special Tool - Hand Tester: 57001-1394
- Connect the hand tester to the regulator/rectifier.

★If the tester readings are not as specified, replace the regulator/rectifier.

NOTICE
Use only Kawasaki Hand Tester 57001-1394 for this test. A tester other than the Kawasaki Hand Tester may show different readings. **If a megger or a meter with a large capacity battery is used, the regulator/rectifier will be damaged.**

Regulator/Rectifier Resistance **(Unit: kΩ)**

		Tester (+) Lead Connection				
	Terminal	A	B	C	D	E
(–)*	A	–	∞	∞	∞	∞
	B	6 ~ 20	–	4 ~ 12	4 ~ 12	4 ~ 12
	C	4 ~ 12	∞	–	∞	∞
	D	4 ~ 12	∞	∞	–	∞
	E	4 ~ 12	∞	∞	∞	–

(−)*: Tester (−) Lead Connection

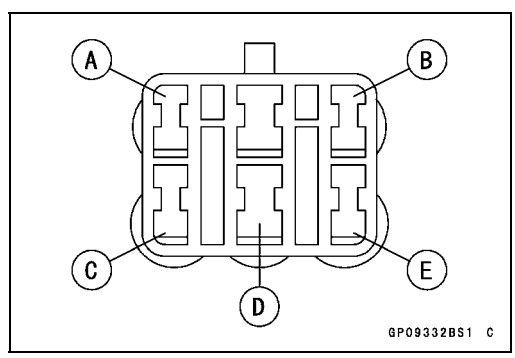

- Install the regulator/rectifier (see Regulator/Rectifier Installation).

Charging System

Charging System Troubleshooting

NOTE

○*Be sure the prepared battery is fully charged.*

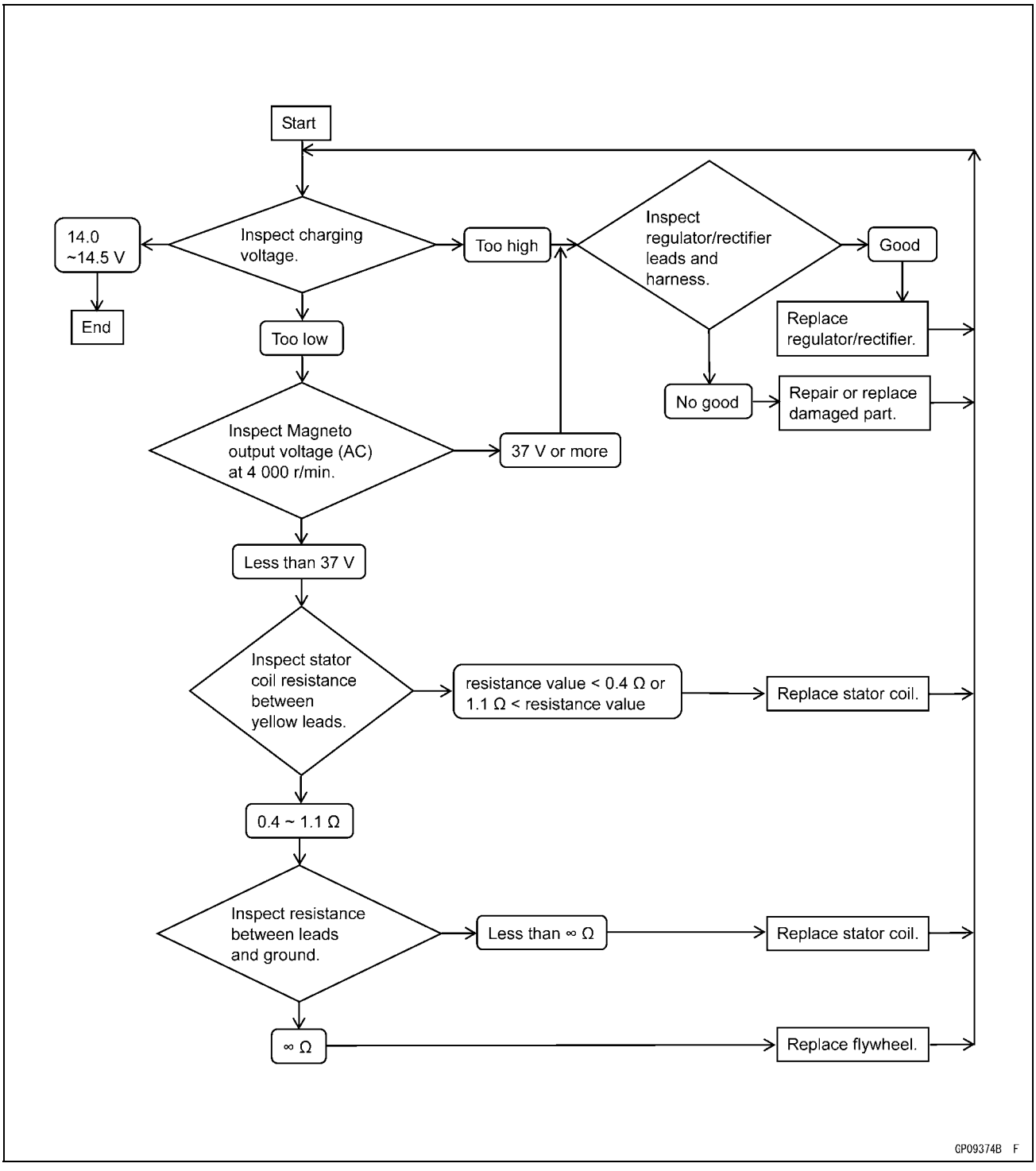

Charging System

Capacitor Removal

- Disconnect the connector [A], and pull the capacitor [B] upward.

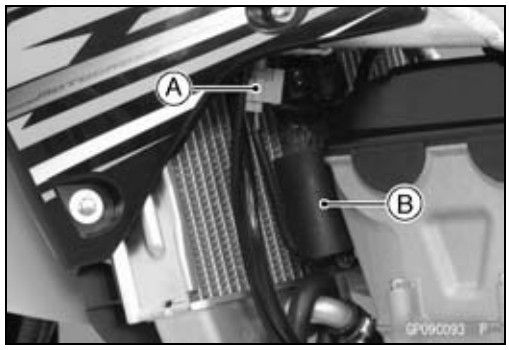

Capacitor Installation

- Face the lead of the capacitor downward, and insert the capacitor to the bracket.
- Connect the connector.

Capacitor Inspection

- Remove:
  Capacitor (see Capacitor Removal)
- Set the hand tester to the × 1 kΩ range, connect the tester to the leads of the capacitor, and check the internal resistance the following table.

Special Tool - Hand Tester: 57001-1394

NOTICE
Use only Kawasaki Hand Tester 57001-1394 for this test. A tester other than the Kawasaki Hand Tester may show different readings.

★If the readings do not correspond to the table, replace the capacitor unit.

Capacitor Internal Resistance

		Tester Positive (+) Lead Connection	
Tester Negative (–) Lead Connection	Color	O	BK/W
	O	–	more than 5 kΩ *1
	BK/W	Should not be inspected *2	–

*1: Check the capacitor after 2 minutes.
*2: Do not check the resistance because of opposite of the polarity.

Capacitor Capacity
10 000 μF/50 V

Ignition Timing

Ignition Timing Inspection

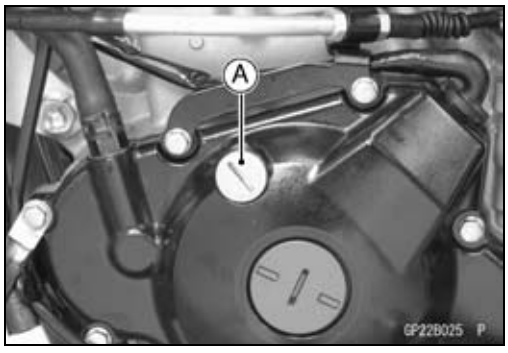

- Remove the timing inspection cap [A].

  Special Tool - Filler Cap Driver: 57001-1454

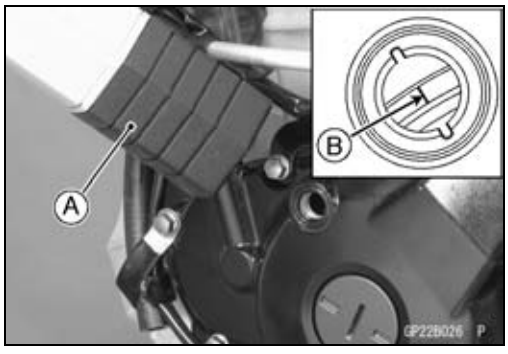

- Attach the timing light [A] to the ignition coil lead in the manner prescribed by the manufacturer.

  Special Tool - Timing Light: 57001-1241
- Start the engine and aim the timing light at the TDC mark [B] on the flywheel.
- Run the engine at the speeds specified and note the alignment of the TDC mark.

○Check the engine speed, using the engine revolution tester [A] for high accuracy.

Ignition Timing

Engine speed [r/min (rpm)]	Hole groove aligns with:
2 000	Line mark on flywheel

★If the ignition timing is incorrect, check the crankshaft sensor (see Crankshaft Sensor Inspection).

★If the crankshaft sensor is normal, replace the ECU.

- Replace the timing inspection cap O-ring with a new one.
- Apply grease to the O-ring.
- Tighten the timing inspection cap.

  Special Tool - Filler Cap Driver: 57001-1454

  Torque - Timing Inspection Cap: 3.5 N·m (0.36 kgf·m, 31 in·lb)

Ignition System

Safety Instructions

⚠ WARNING

The ignition system produces extremely high voltage. Do not touch the spark plug, ignition coil or ignition coil lead while the engine is running, or you could receive a severe electrical shock.

Ignition Coil Removal

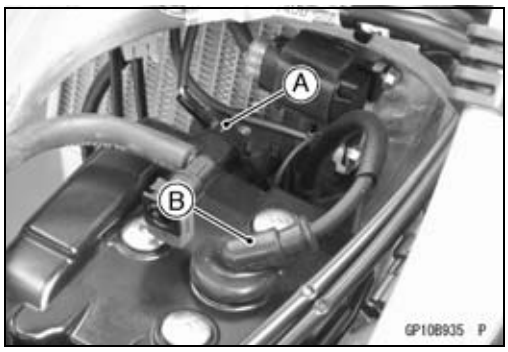

- Remove:
  Fuel Tank (see Fuel Tank Removal in the Fuel System (DFI) chapter)
  Capacitor (see Capacitor Removal)
- Disconnect the primary lead connector [A].
- Pull off the spark plug cap [B] .

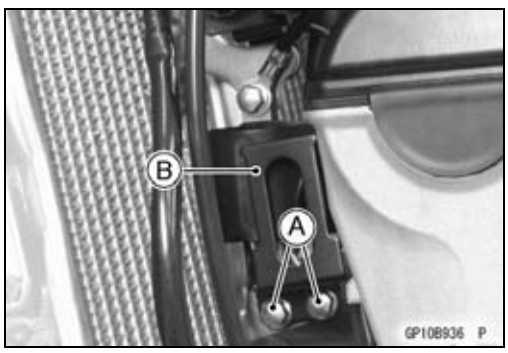

- Remove:
  Bolts [A]
  Capacitor Bracket [B]

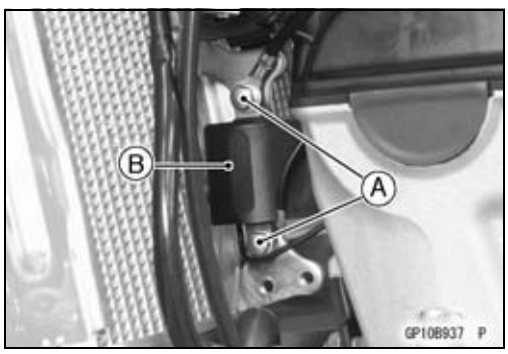

- Remove:
  Ignition Coil Bolts [A]
  Ignition Coil [B]

Ignition Coil Installation

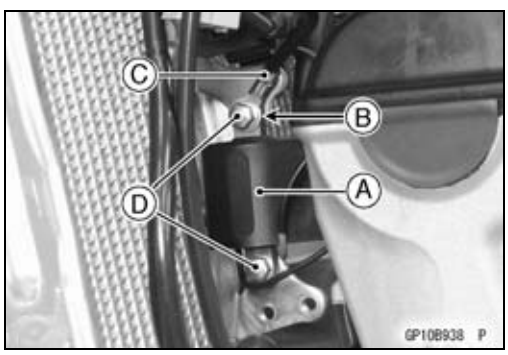

- Run the leads according to the Cable, Wire, and Hose Routing section in the Appendix chapter.
- Install:
  Ignition Coil [A]
  Ignition Coil Ground Lead [B]
  Frame Ground 2 Lead [C]
- Tighten:

  Torque - Ignition Coil Bolts [D]: 9.8 N·m (1.0 kgf·m, 87 in·lb)
- Connect the primary lead connector.
- Install the capacitor bracket and tighten the bolts.

- Install the spark plug cap [A] so that it is aligned with the line [B] on the cylinder head cover.
- Pull up the spark plug cap lightly to make sure of the installation of the spark plug cap.

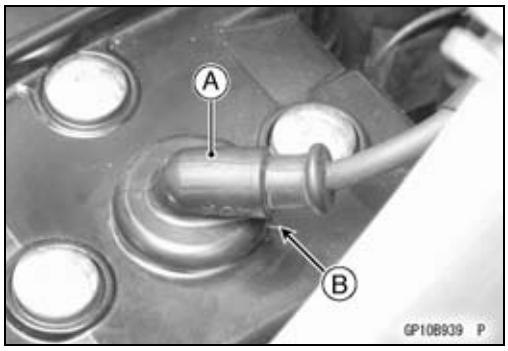

Ignition Coil Inspection

Measuring Arcing Distance

The most accurate test for determining the condition of the ignition coil is made by measuring arcing distance using the coil tester for the 3-needle method.

- Remove the ignition coil (see Ignition Coil Removal).
- Measure the arching distance using the coil tester [A].
- Connect the ignition coil (with the spark plug cap left installed on the spark plug lead) [B] to the tester and measure the arcing distance.

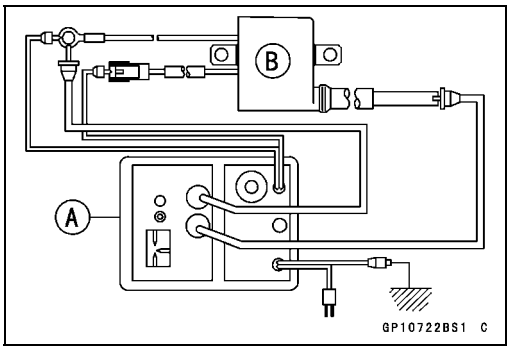

⚠ WARNING

To avoid extremely high voltage shocks, do not touch the coil or lead.

★If the distance reading is less than the specified value, the ignition coil or spark plug cap is defective.

3 Needle Arcing Distance
Standard: 7 mm (0.26 in.) or more

- To determine which part is defective, measure the arcing distance again with the spark plug cap removed from the spark plug lead.

★If the arcing distance is subnormal as before, the trouble is with the ignition coil itself. If the arcing distance is now normal, the trouble is with the spark plug cap.

Ignition System

Measuring Coil Resistance

If the arcing tester is not available, the coil can be checked for a broken or badly shorted winding with a digital meter. However, the digital meter cannot detect layer shorts and shorts resulting from insulation breakdown under high voltage.

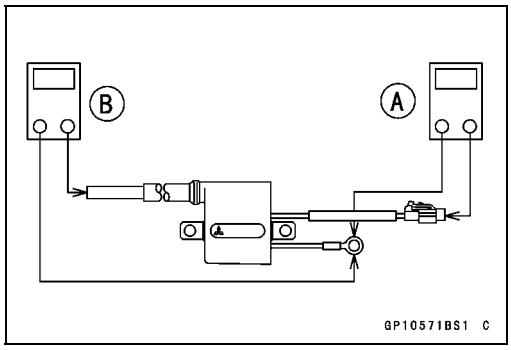

- Remove the ignition coil (see Ignition Coil Removal).
- Measure the primary winding resistance [A] as follows.
  - ○Connect the digital meter between the coil terminals.
  - ○Set the digital meter, and read the digital meter.
- Measure the secondary winding resistance [B] as follows.
  - ○Remove the spark plug cap from the spark plug lead.
  - ○Connect the digital meter between the spark plug lead and the ground lead terminal.
  - ○Set the digital meter, and read the digital meter.

Ignition Coil Winding Resistance

Primary Windings: 0.28 ~ 0.38 Ω at 20°C (68°F)

Secondary Windings: 7.65 ~ 10.4 kΩ at 20°C (68°F)

★If the digital meter does not read as specified, replace the ignition coil.

★If the digital meter reads as specified, the ignition coil windings are probably good. However, if the ignition system still does not perform as it should after all other components have been checked, test replace the coil with one known to be good.

- Check the spark plug lead for visible damage.

★If the spark plug lead is damaged, replace the ignition coil.

Spark Plug Cleaning and Inspection

- Refer to the Spark Plug Cleaning and Inspection in the Periodic Maintenance chapter.

Spark Plug Gap Inspection

- Refer to the Spark Plug Cleaning and Inspection in the Periodic Maintenance chapter.

Ignition Coil Primary Peak Voltage Check

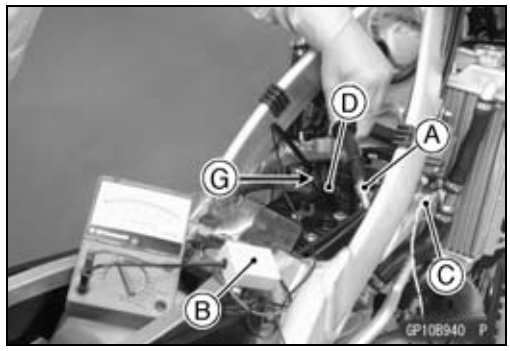

- Remove the spark plug cap from the spark plug, but do not remove the spark plug.
- Install the good spark plug [A] to the spark plug cap, then touch the frame with it.

NOTE

○*Measure the voltage with each lead connected correctly. The correct value may not be obtained if disconnected.*

○*Maintain the correct value of compression pressure for the cylinder (Be sure to measure the voltage with the spark plug installed to the cylinder head.)*

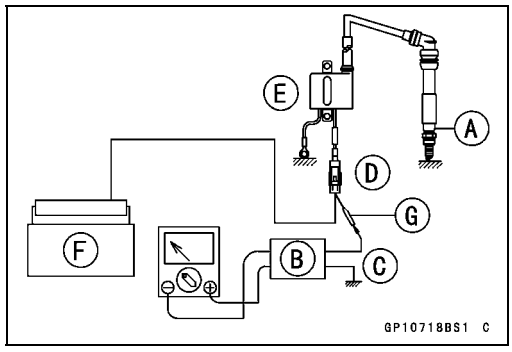

- Connect the peak voltage adapter [B] to a digital meter.

Special Tools - Peak Voltage Adapter: 57001-1415
Type: KEK-54-9-B
Needle Adapter Set: 57001-1457

Hand Tester Range: DC 250 V

- Connect the peak voltage adapter to the ignition coil terminal and ground.

Connections:

		Peak Voltage Adapter		Digital Meter
Ground [C]	←	**R lead**	→	**(+)**
Terminal (O Lead) [D]	←	**BK lead**	→	**(–)**

Ignition Coil [E]
ECU [F]
Needle Adapter [G]

- Shift the gear to the neutral position.
- Crank the engine by kicking the pedal several times to measure the peak voltage of the ignition coil.

Ignition Coil Primary Peak Voltage
Standard: 120 V or more

⚠ WARNING

Electrical equipment can cause serious electrical shock. To avoid being shocked, do not touch the metal portion of the probe when measuring voltage.

★If the voltage is less than the specified value, see the Troubleshooting on next page.

IC Igniter Inspection

○The IC igniter is built in the ECU.

- Refer to the following items.
  Ignition System Troubleshooting (see Ignition System section)
  ECU Power Supply Inspection (see ECU Power Supply Inspection in the Fuel System (DFI) chapter)

Ignition System

Troubleshooting

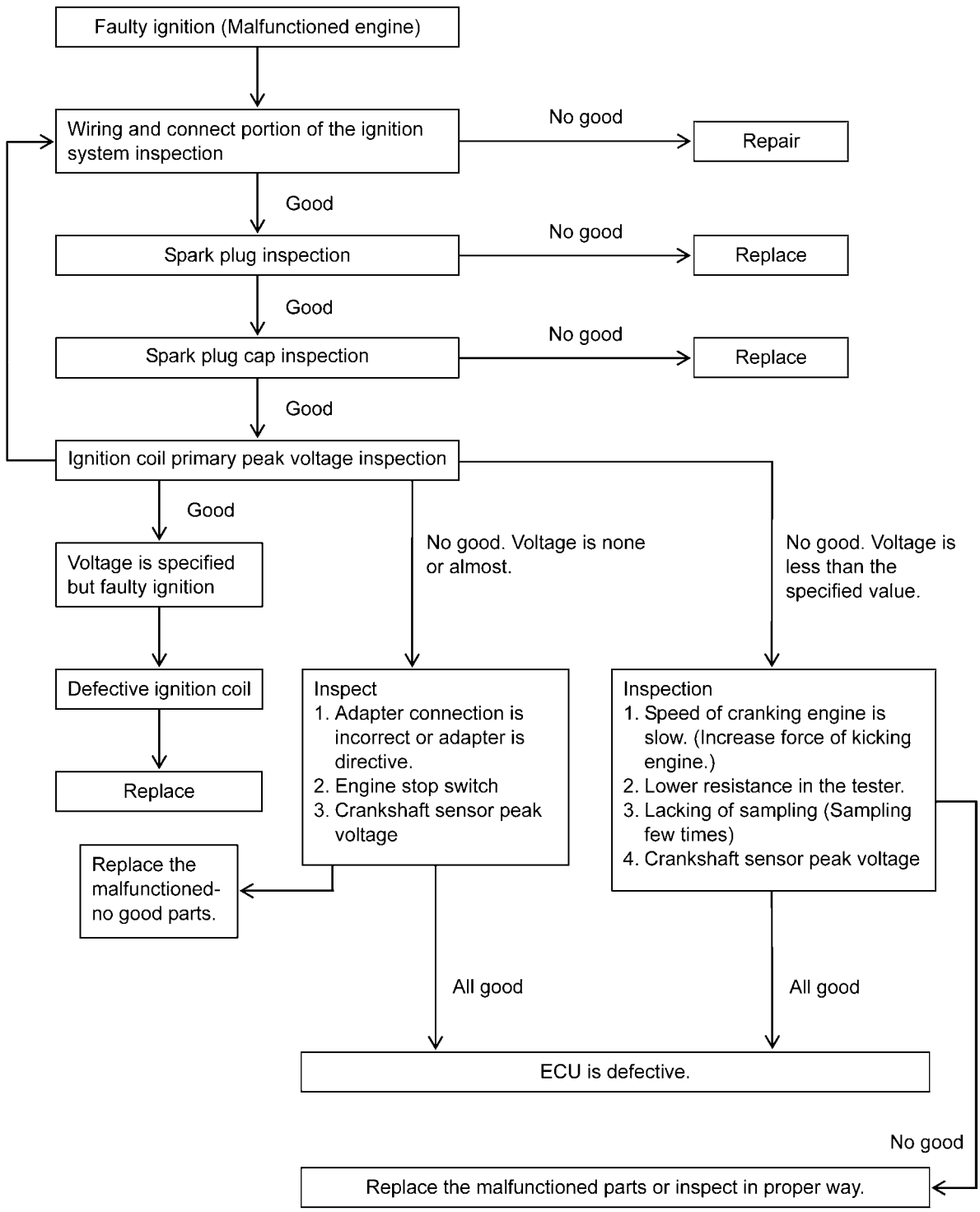

GP10796B F

Crankshaft Sensor Peak Voltage Check

- Disconnect the magneto lead connector (see Magneto Cover Removal).

NOTE

○*Measure the voltage with each lead connected correctly. The correct value may not be obtained if disconnected.*

○*Maintain the correct value of compression pressure for the cylinder (Be sure to measure the voltage with the spark plug installed to the cylinder head).*

⚠ WARNING

Electrical equipment can cause serious electrical shock. To avoid being shocked, do not touch the metal portion of the probe when measuring voltage.

- Set a digital meter, and connect it to the peak voltage adapter [A].

Special Tool - Peak Voltage Adapter: 57001-1415
Type: KEK-54-9-B

- Connect the adapter to the terminals of the magneto lead connector [B].

Connections:

Magneto Lead Connector		Peak Voltage Adapter		Digital Meter
G/W lead [C]	←	R lead	→	(+)
W/Y lead [D]	←	BK lead	→	(–)

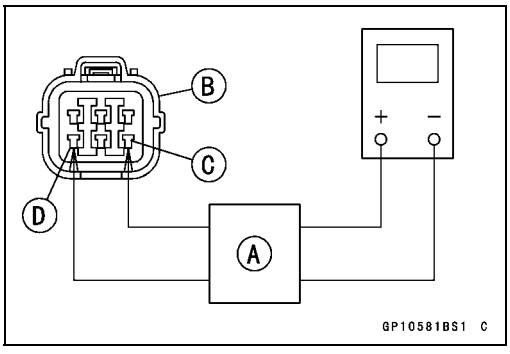

- Shift the gear to the neutral position.
- Crank the engine by kicking the pedal several times to measure the peak voltage of the crankshaft sensor.

Crankshaft Sensor Peak Voltage
Standard: 3 V or more

★If the voltage is less than the specified, check the crankshaft sensor (see Crankshaft Sensor Inspection).

Crankshaft Sensor Inspection

- Disconnect the magneto lead connector (see Magneto Cover Removal).
- Set a digital meter [A] and connect it to the Green/White [B] and White/Yellow [C] leads in the connector.

Crankshaft Sensor Resistance
Standard: 180 ~ 280 Ω at 20°C (68°F)

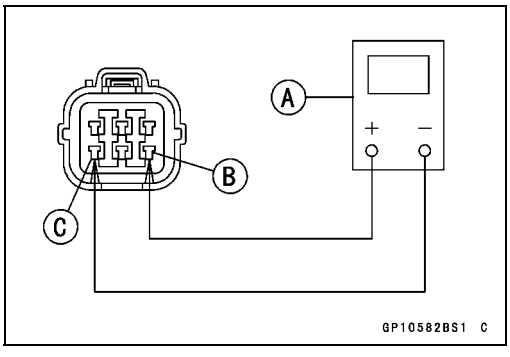

★If there is more resistance than the specified value, the coil has an open lead and must be replaced. Much less than this resistance means the coil is shorted, and must be replaced.

- Using the highest resistance range of the digital meter, measure the resistance between the crankshaft sensor leads and chassis ground.

★Any digital meter reading less than infinity (∞) indicates a short, necessities replacement of the crankshaft sensor assembly.

Ignition System

Engine Stop Switch System Check

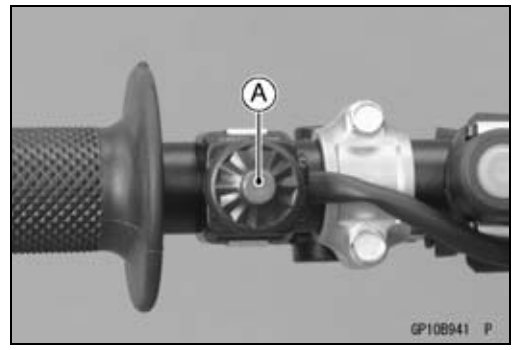

- Start the engine.
- Push the engine stop switch [A], stop the engine.

★If the engine does not stop, check the engine stop switch for continuity (see Engine Stop Switch Inspection).

★If the engine stop switch is good, check the wiring (see Wiring Inspection).

★If the wiring is good, replace the ECU.

Launch Control Mode Button System Check

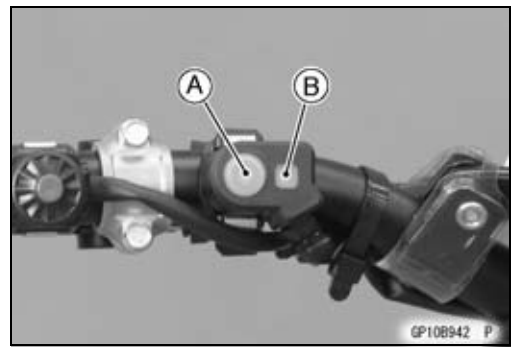

- Start the engine.
- Shift the gear to the neutral, 1st or 2nd position.
- Push the launch control mode button [A] for more than two seconds.

○The orange launch control mode indicator light (LED) [B] will blink to indicate the system is operating.

- Apply the clutch lever and shift the gear to the 3rd position to deactivate the system.

○The orange launch control mode indicator light (LED) should stop blinking.

★If the launch control mode system does not work as above, check the following items.

Launch Control Mode Button (see Launch Control Mode Button Inspection)

Orange Launch Control Mode Indicator Light (LED) (see Orange FI Warning Indicator Light (LED) Inspection in the Fuel System (DFI) chapter)

Wiring (see Wiring Inspection)

★If the all parts are good condition, replace the ECU.

DFI Setting Data Selection Connector Inspection

NOTE

○*Refer to the Technical Information-DFI Setting Data Selection in the General Information chapter for the details of the DFI Setting Data Selection.*

White Connector [A] (for Soft Track Condition)
Green Connector [B] (for Standard)
Black Connector [C] (for Hard Track Condition)

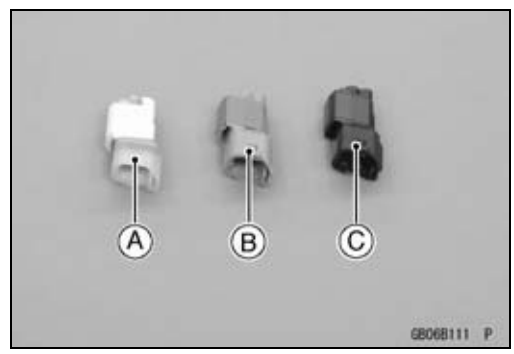

Ignition System

- Check the wiring for continuity between the terminals of each connector referring the connector circuit.
  White Connector [A]
  Green Connector [B]
  Black Connector [C]

★If a digital meter [D] does not read 0 Ω, the connector is defective. Replace the connector with a new one.

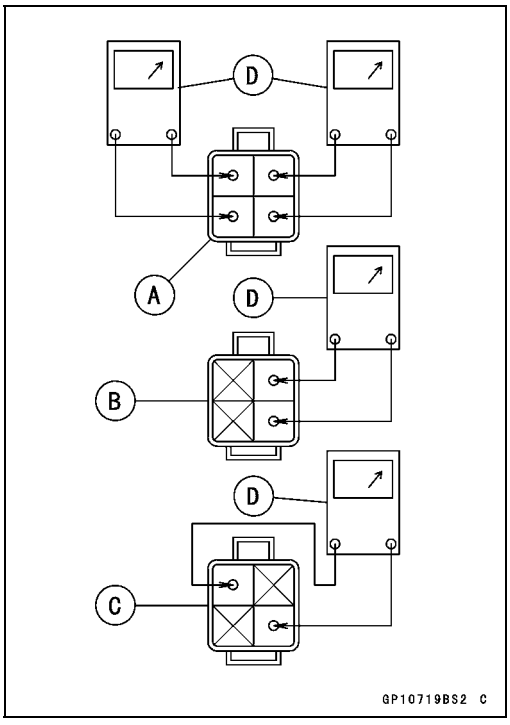

Switches

Engine Stop Switch Inspection

- Using a digital meter, check to see that the connections shown in the table have continuity (about zero ohms).

★If the switch has an open or short, replace it with a new one.

Engine Stop Switch Connection

	BK/W	BK
Push	○———	———○
Release		

Launch Control Mode Button Inspection

- Using a digital meter, check to see that the connections shown in the table have continuity (about zero ohms).

★If the switch has an open or short, replace it with a new one.

Launch Control Mode Button Connection

	BK/W	G
Push	○———	———○
Release		

Gear Position Switch Removal

- Refer to the Gear Position Switch Removal in the Fuel System (DFI) chapter.

Gear Position Switch Installation

- Refer to the Gear Position Switch Installation in the Fuel System (DFI) chapter.

Gear Position Switch Inspection

- Refer to the Gear Position Switch Inspection in the Fuel System (DFI) chapter.

Appendix

Table of Contents

Cable, Wire, and Hose Routing 17-2
Troubleshooting Guide 17-26

Cable, Wire, and Hose Routing

KX450FC

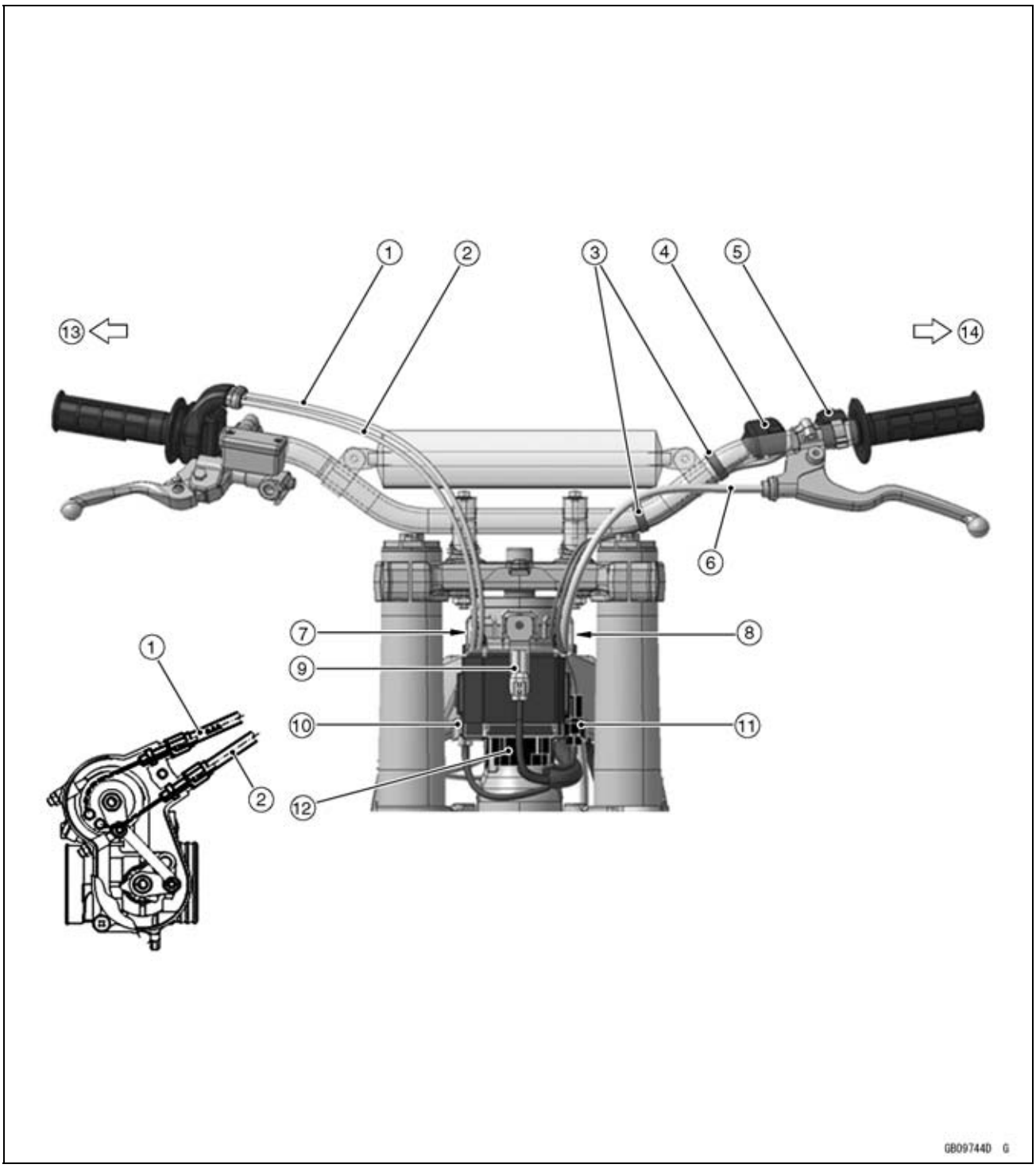

1. Throttle Cable (Accelerator)
2. Throttle Cable (Decelerator)
3. Bands (Hold the engine stop switch lead and launch control mode button lead. Cut the excess of the bands into 15 mm length or shorter.)
4. Launch Control Mode Button
5. Engine Stop Switch
6. Clutch Cable
7. Run the throttle cables into the guide.
8. Run the engine stop switch lead, launch control mode button lead and clutch cable into the guide.
9. Kawasaki Diagnostic System Connector
10. DFI Setting Data Selection Connector
11. Launch Control Mode Button Lead Connector
12. ECU Connector
13. Right Side
14. Left Side

Cable, Wire, and Hose Routing

This page intentionally left blank.

Cable, Wire, and Hose Routing

KX450FD ~

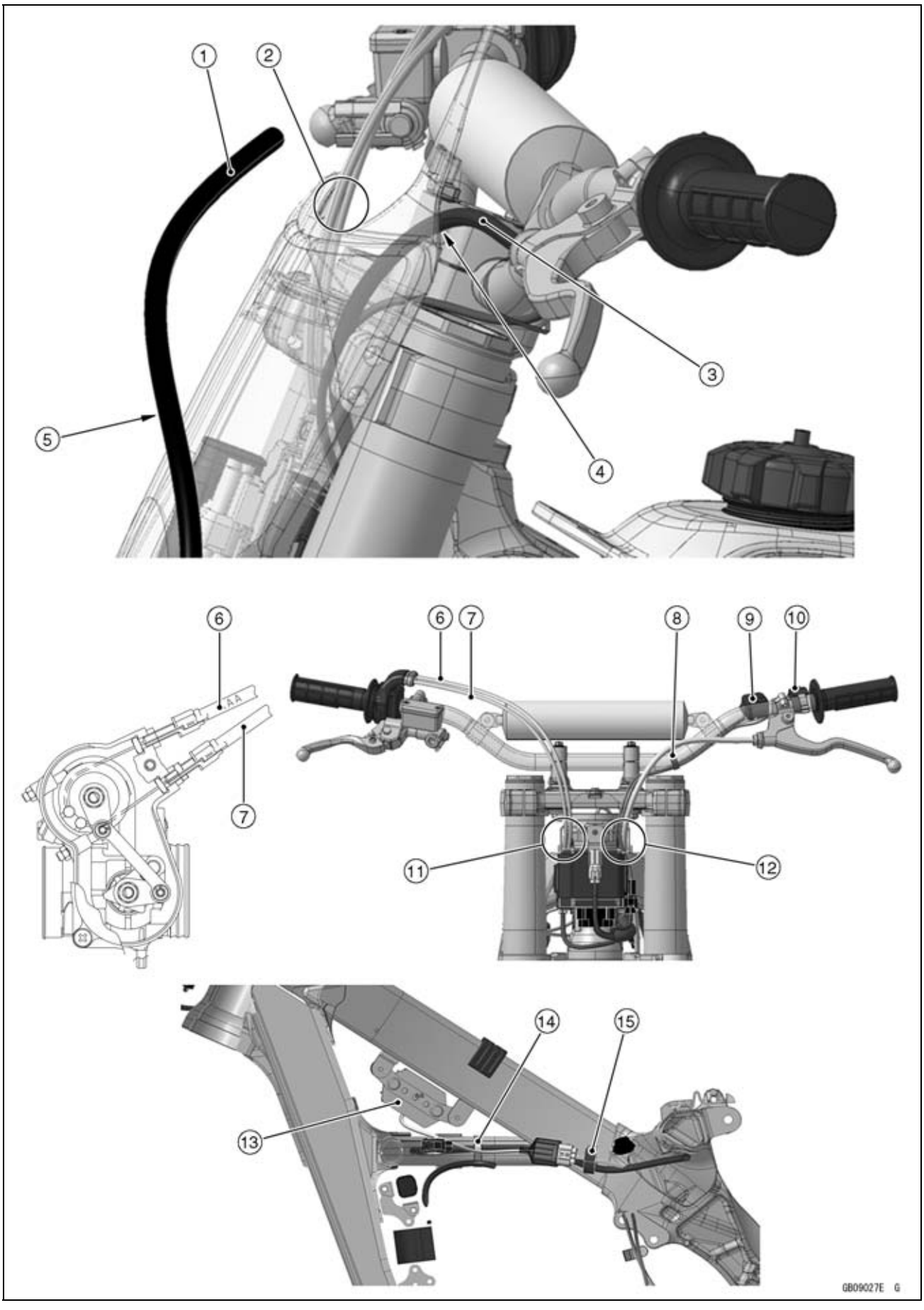

Cable, Wire, and Hose Routing

1. Front Brake Hose
2. Run the throttle cables inside of the number plate.
3. Clutch Cable
4. Run the clutch cable inside of the number plate.
5. Run the front brake hose outside of the number plate.
6. Throttle Cable (Accelerator)
7. Throttle Cable (Decelerator)
8. Band (Hold the engine stop switch lead and launch control mode button lead. Cut the excess of the band into 15 mm length or shorter.)
9. Launch Control Mode Button
10. Engine Stop Switch
11. Run the throttle cables into the guide.
12. Run the engine stop switch lead, launch control mode button lead and clutch cable into the guide. Run the clutch cable outside of the two leads.
13. Regulator/Rectifier
14. Clamp (Hold the main harness.)
15. Clamp

Cable, Wire, and Hose Routing

KX450FC

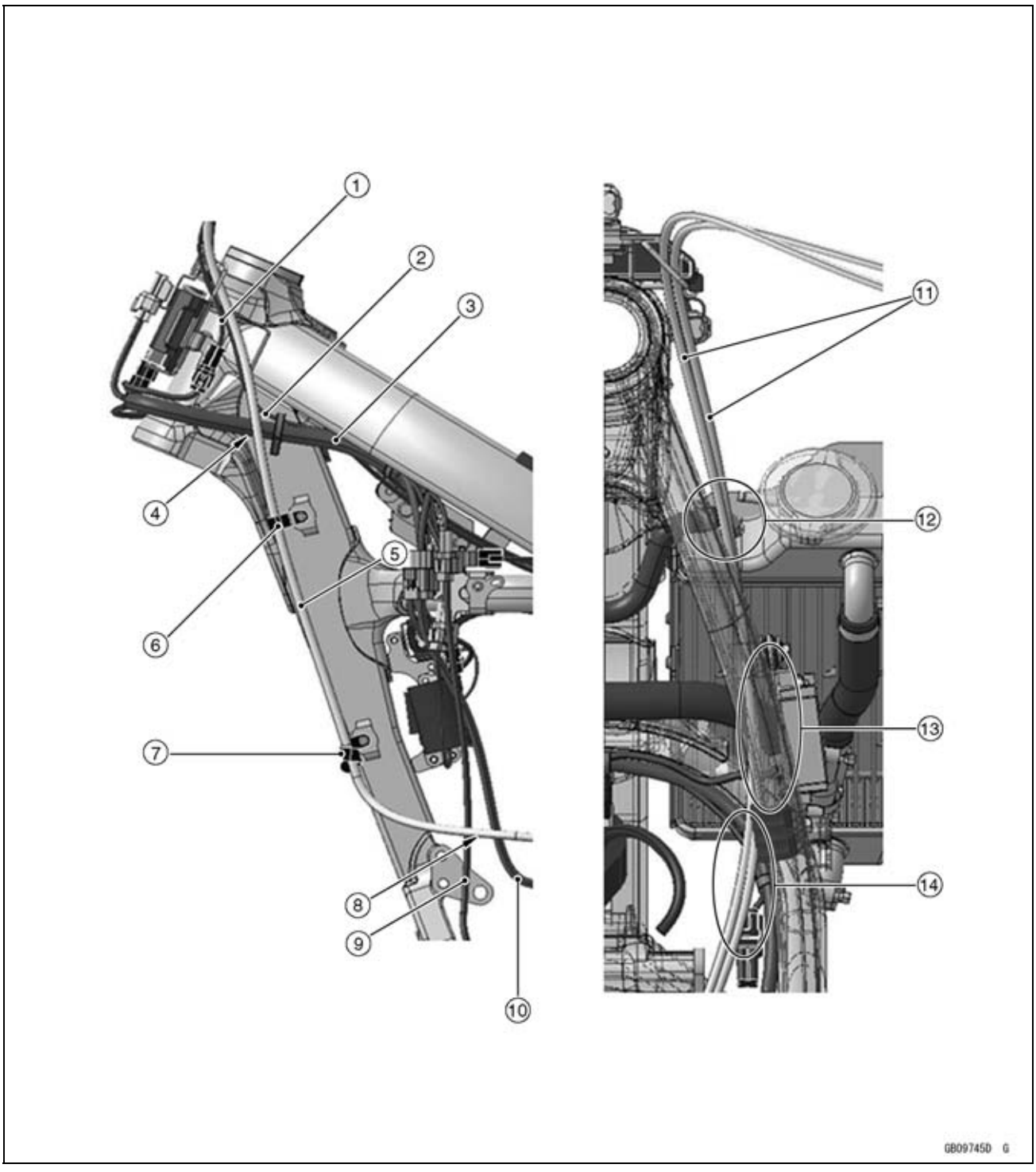

1. Launch Control Mode Button Lead
2. Engine Stop Switch Lead
3. Main Harness
4. Run the clutch cable outside of the main harness.
5. Clutch Cable
6. Clamp
7. Clamp (Wind the clamp on the cable.)
8. Run the clutch cable outside of the magneto lead and gear position switch lead.
9. Gear Position Switch Lead
10. Magneto Lead
11. Throttle Cables
12. Run the throttle cables over the water hose.
13. Run the throttle cables through the side of the fuel tank.
14. Run the throttle cables over the main harness.

When assemble the fuel tank, confirm the throttle cables can move forward and backward.

Cable, Wire, and Hose Routing

KX450FD ~

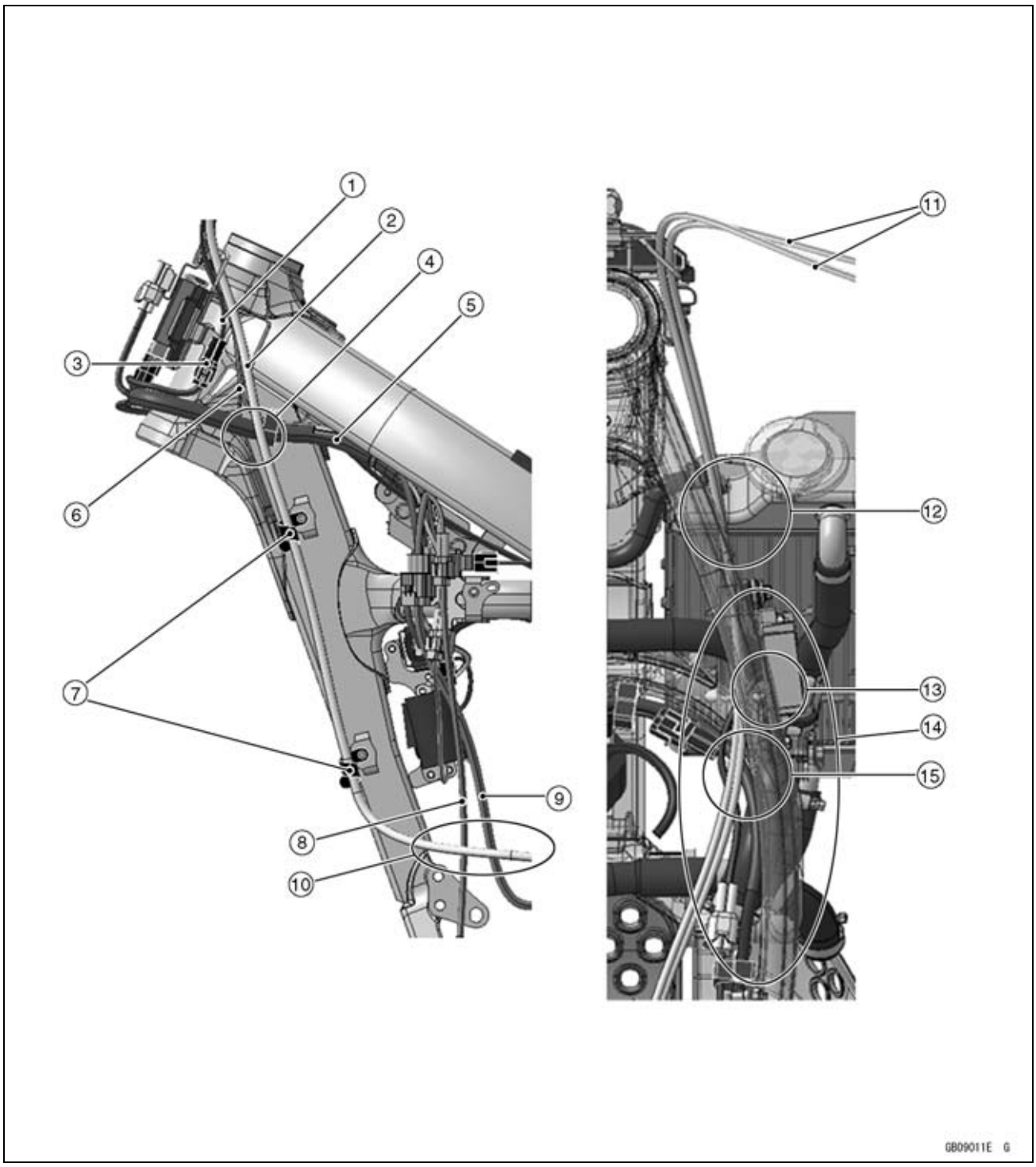

1. Launch Control Mode Button Lead
2. Clutch Cable
3. Launch Control Mode Button Connector
4. Run the clutch cable outside of the main harness.
5. Main Harness
6. Engine Stop Switch Lead
7. Clamps (Wind the clamps on the cable.)
8. Gear Position Switch Lead
9. Magneto Lead
10. Run the clutch cable outside of the magneto lead and gear position switch lead.
11. Throttle Cables
12. Run the throttle cables over the water hose.
13. Do not touch the regulator/rectifier lead and water hose.
14. Run the throttle cables through the side of the fuel tank.
15. Run the throttle cables over the main harness.

When assemble the fuel tank, confirm the throttle cables can move forward and backward.

Cable, Wire, and Hose Routing

KX450FC

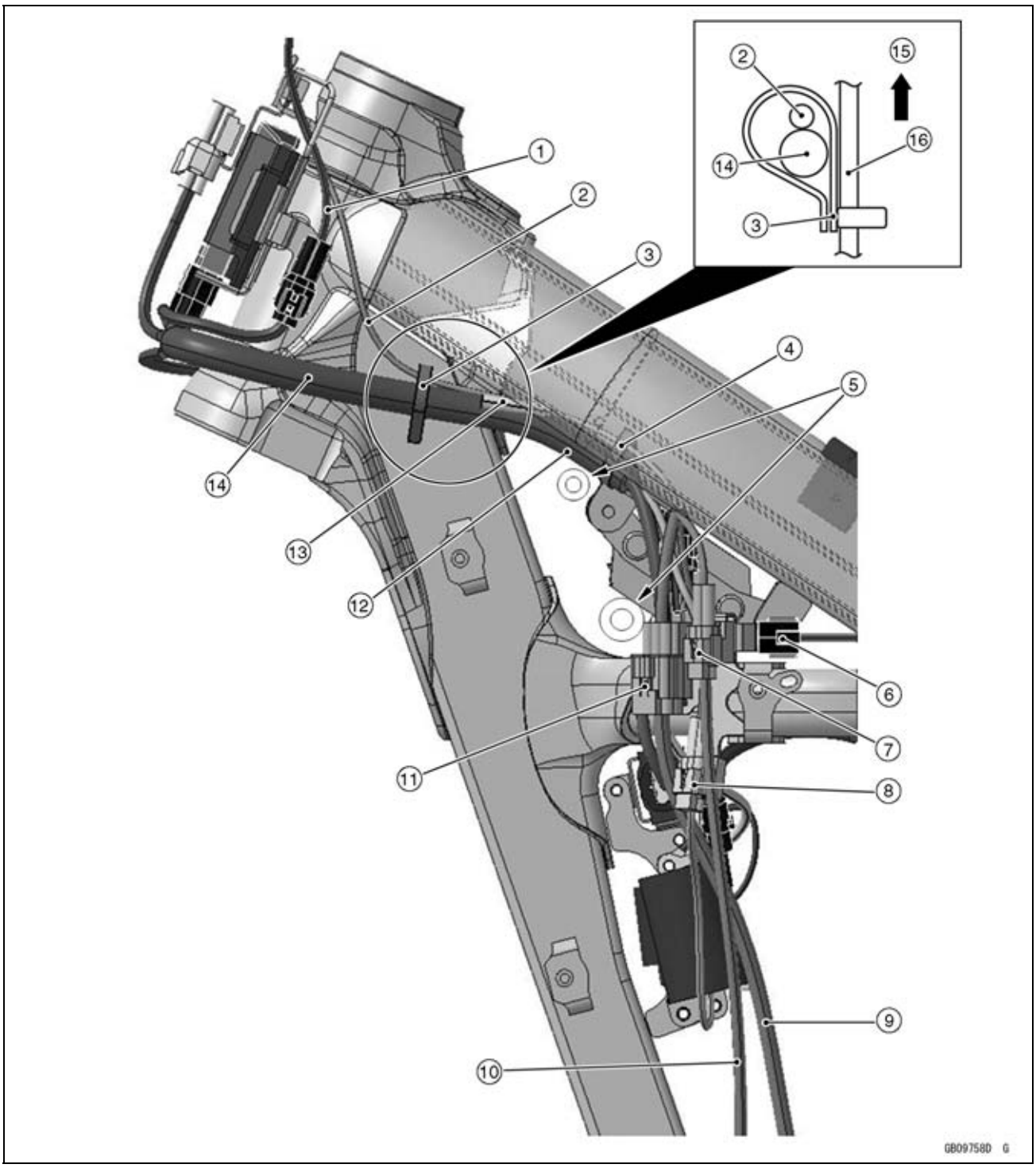

1. Launch Control Mode Button Lead
2. Engine Stop Switch Lead
3. Clamp
4. Hold the engine stop switch lead and the main harness.
5. Water Hoses
6. Fuel Pump Lead Connector
7. Gear Position Switch Lead Connector
8. Capacitor Lead Connector
9. Magneto Lead
10. Gear Position Switch Lead
11. Magneto Lead Connector
12. Run the main harness over the water hose.
13. Self-diagnosis Terminal
14. Main Harness
15. Upper Side
16. Frame Pipe

Cable, Wire, and Hose Routing

KX450FD ~

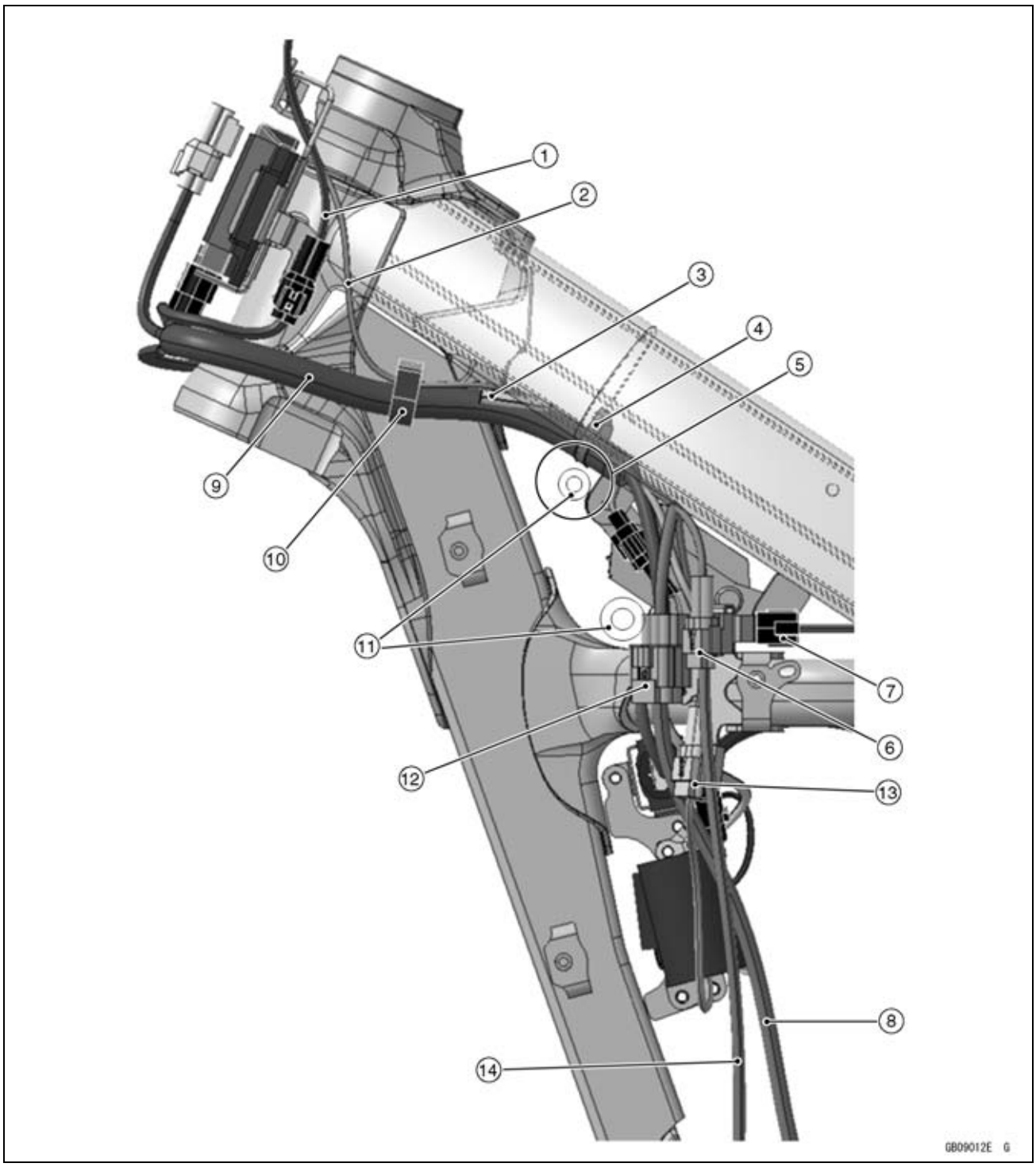

1. Launch Control Mode Button Lead
2. Engine Stop Switch Lead
3. Position the self-diagnosis terminal outside of the main harness.
4. Clamp
5. Run the main harness over the water hose.
6. Gear Position Switch Lead Connector
7. Fuel Pump Lead Connector
8. Magneto Lead
9. Main Harness
10. Clamp (Hold the engine stop switch lead and main harness. Run the engine stop switch lead over the main harness.)
11. Water Hoses
12. Magneto Lead Connector
13. Capacitor Lead Connector
14. Gear Position Switch Lead

Cable, Wire, and Hose Routing

KX450FC

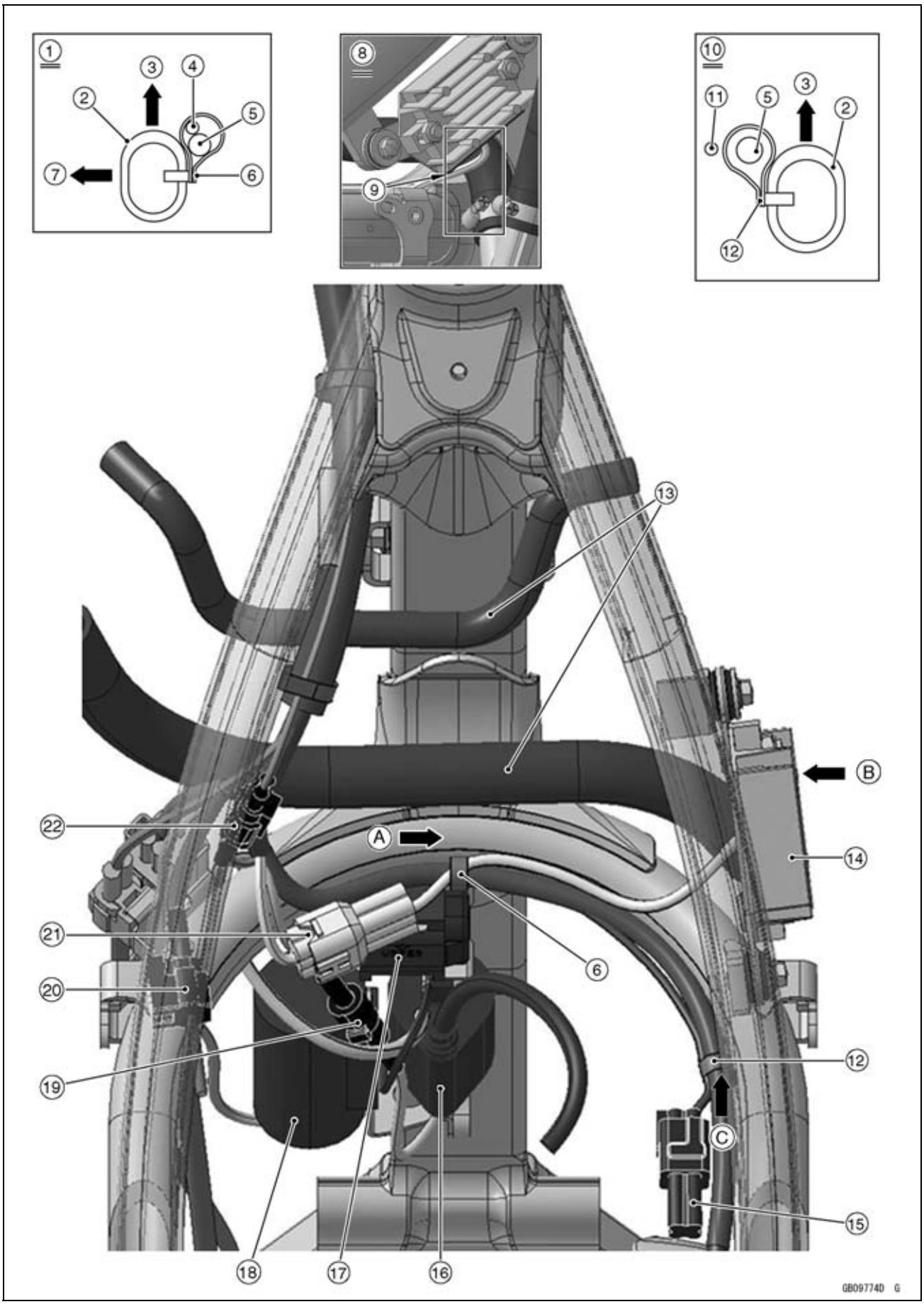

Cable, Wire, and Hose Routing

1. Viewed A
2. Frame Pipe
3. Upper Side
4. Regulator/Rectifier Lead
5. Main Harness
6. Clamp (Hold the PVC tube of the regulator/rectifier lead and main harness. Do not hold the regulator/rectifier leads.)
7. Front Side
8. Viewed B
9. Do not touch the regulator/rectifier leads and water hose clamp.
10. Viewed C
11. KX FI Calibration Kit Lead
12. Clamp (Hold the main harness.)
13. Water Hoses
14. Regulator/Rectifier
15. KX FI Calibration Kit Lead Connector
16. Ignition Coil
17. Vehicle-down Sensor
18. Capacitor
19. Ignition Coil Lead Connector
20. Fuel Pump Lead Connector
21. Regulator/Rectifier Lead Connector
22. Engine Stop Switch Lead Connector

Cable, Wire, and Hose Routing

KX450FD ~

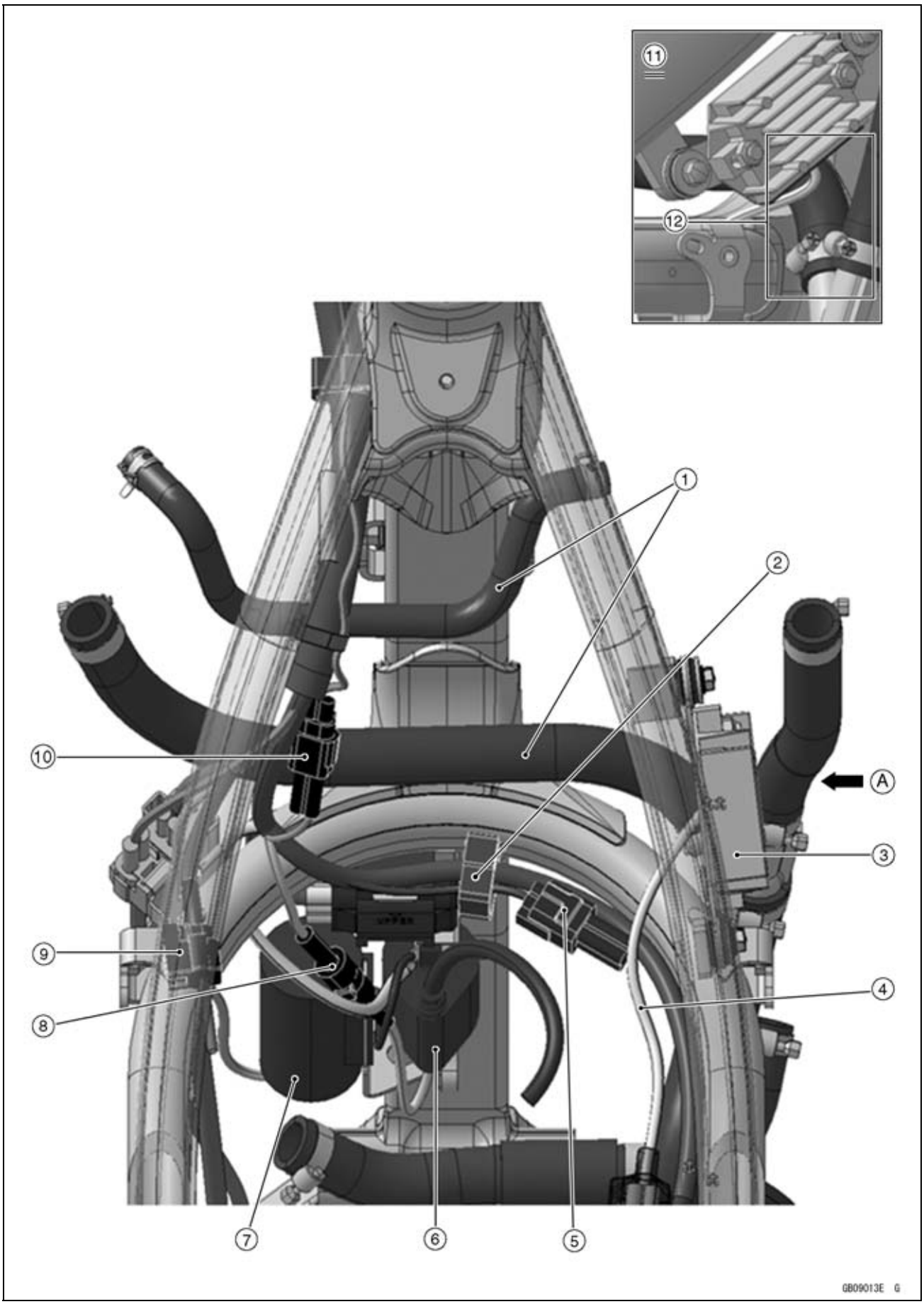

Cable, Wire, and Hose Routing

1. Water Hoses
2. Clamp
3. Regulator/Rectifier
4. Regulator/Rectifier Lead
5. KX FI Calibration Kit Lead Connector
6. Ignition Coil
7. Capacitor
8. Ignition Coil Lead Connector
9. Fuel Pump Lead Connector
10. Position the engine stop switch lead connector between the main harness and water hose.
11. Viewed A
12. Do not touch the regulator/rectifier leads and water hose clamp.

Cable, Wire, and Hose Routing

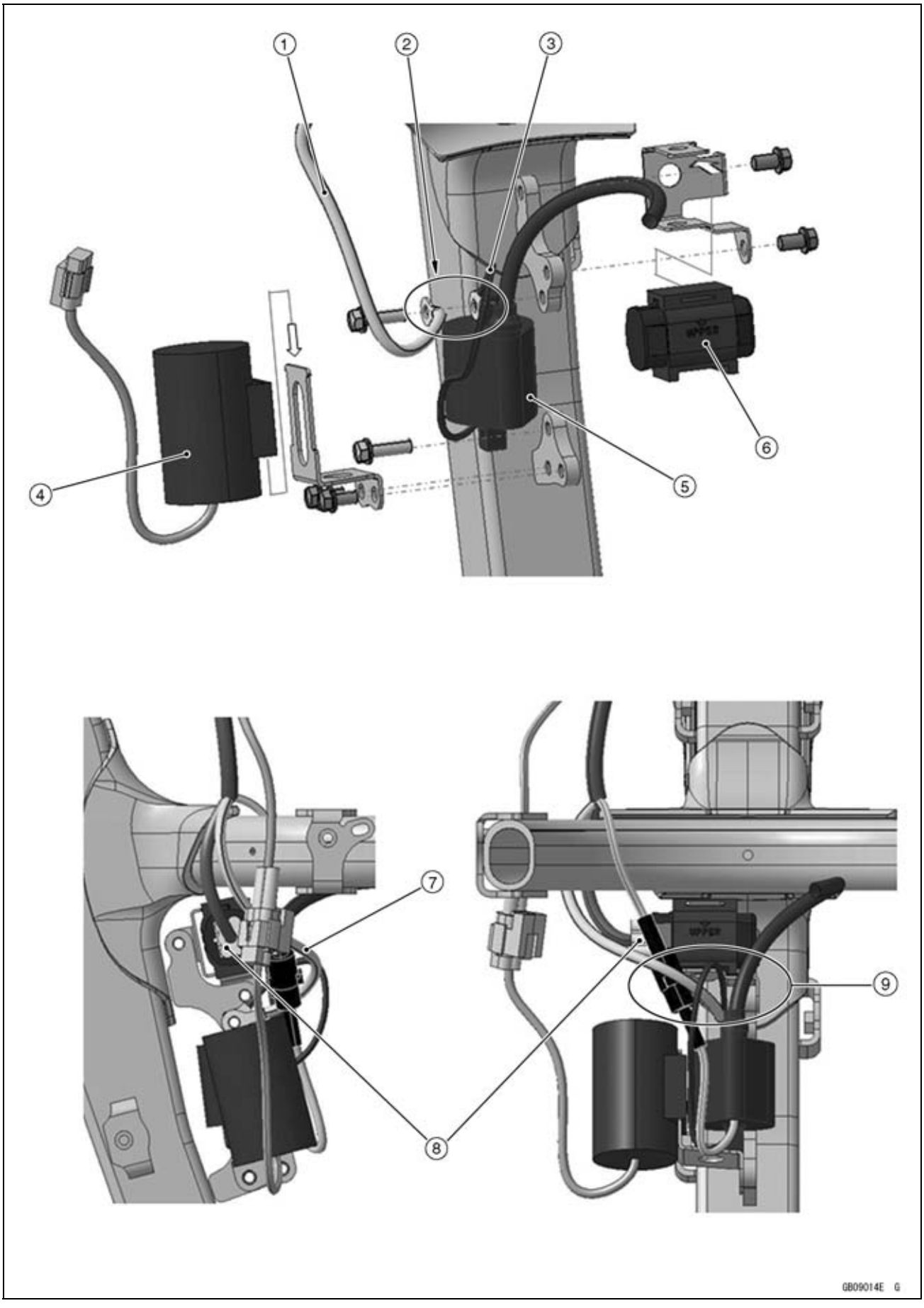

Cable, Wire, and Hose Routing

1. Frame Ground 2 Lead
2. Tighten the ignition coil mounting bolt together with the frame ground 2 and ignition coil ground.
3. Ignition Coil Ground Lead
4. Capacitor (Do not touch the radiator.)
5. Ignition Coil
6. Vehicle-down Sensor
7. Do not touch the ground lead and spark plug lead.
8. Vehicle-down Sensor Connector
9. Do not touch the ignition coil ground lead and vehicle-down sensor bracket.

Cable, Wire, and Hose Routing

KX450FC

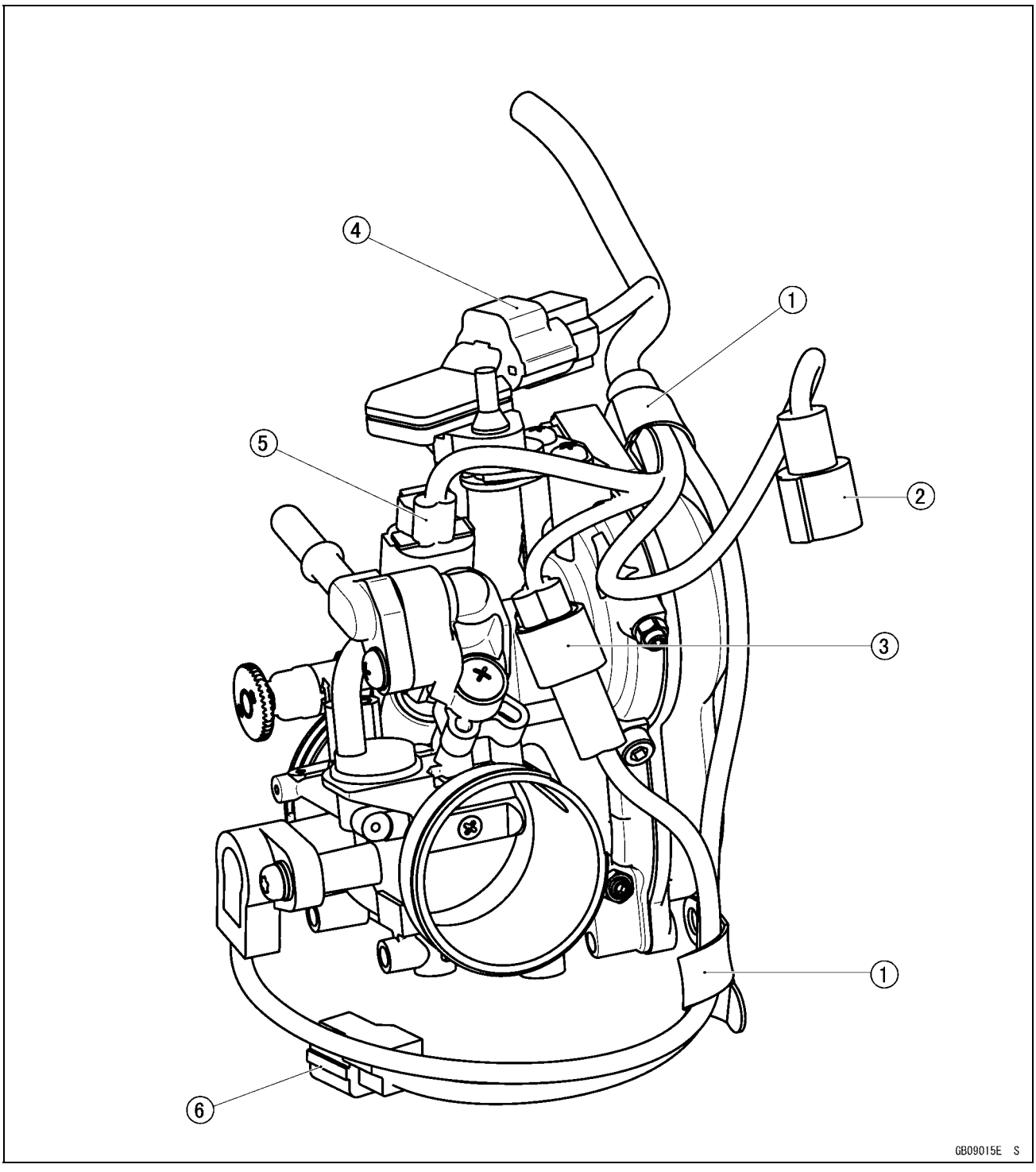

1. Hold the harness at the blue tape portions.
2. Intake Air Temperature Sensor Connector
3. Throttle Sensor Connector
4. Intake Air Pressure Sensor Connector
5. Fuel Injector Connector
6. Water Temperature Sensor Connector

Cable, Wire, and Hose Routing

KX450FD ~

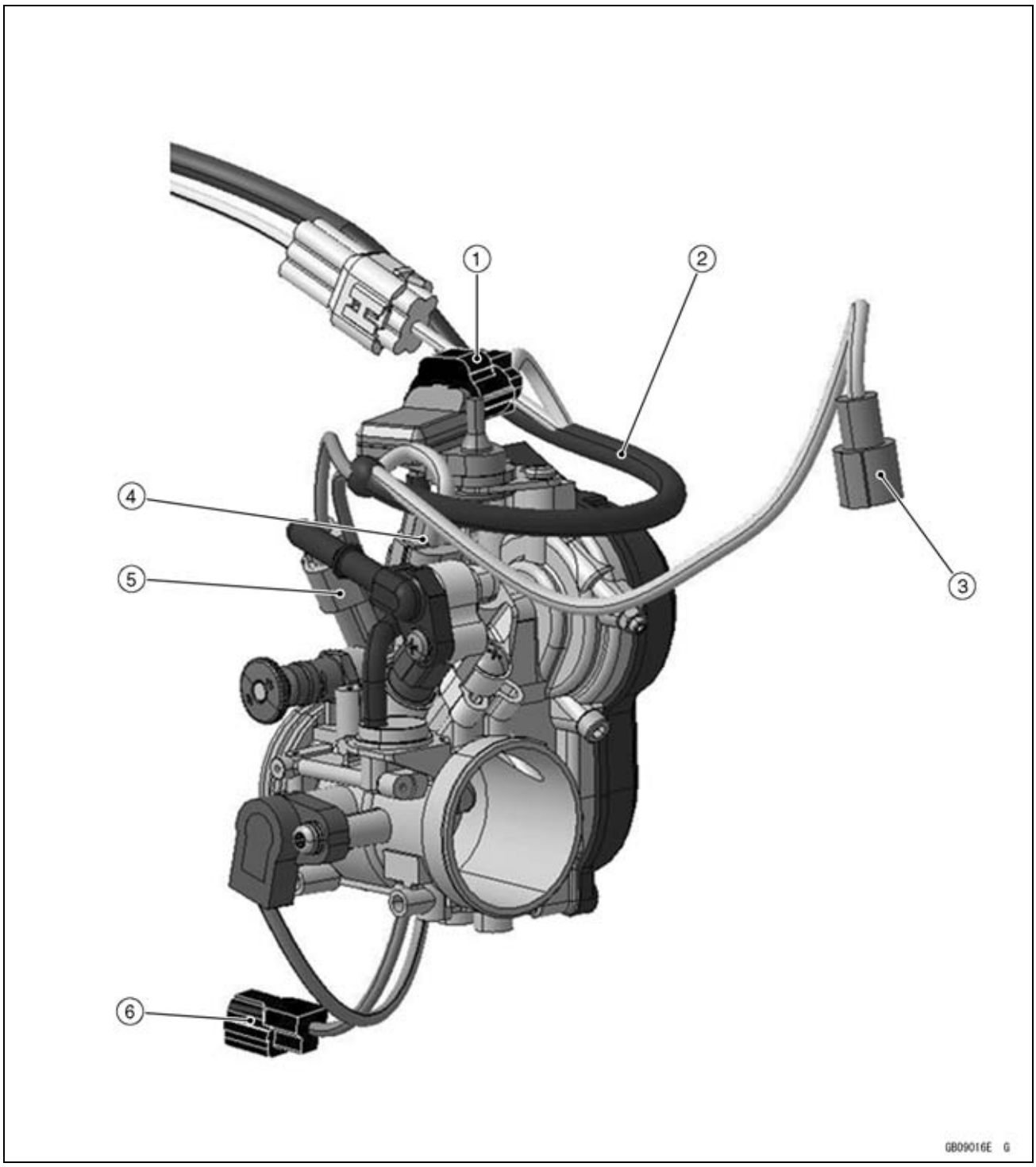

1. Intake Air Pressure Sensor Connector
2. Main Harness
3. Intake Air Temperature Sensor Connector
4. Fuel Injector Connector
5. Throttle Sensor Connector
6. Water Temperature Sensor Connector

Cable, Wire, and Hose Routing

KX450FD ~

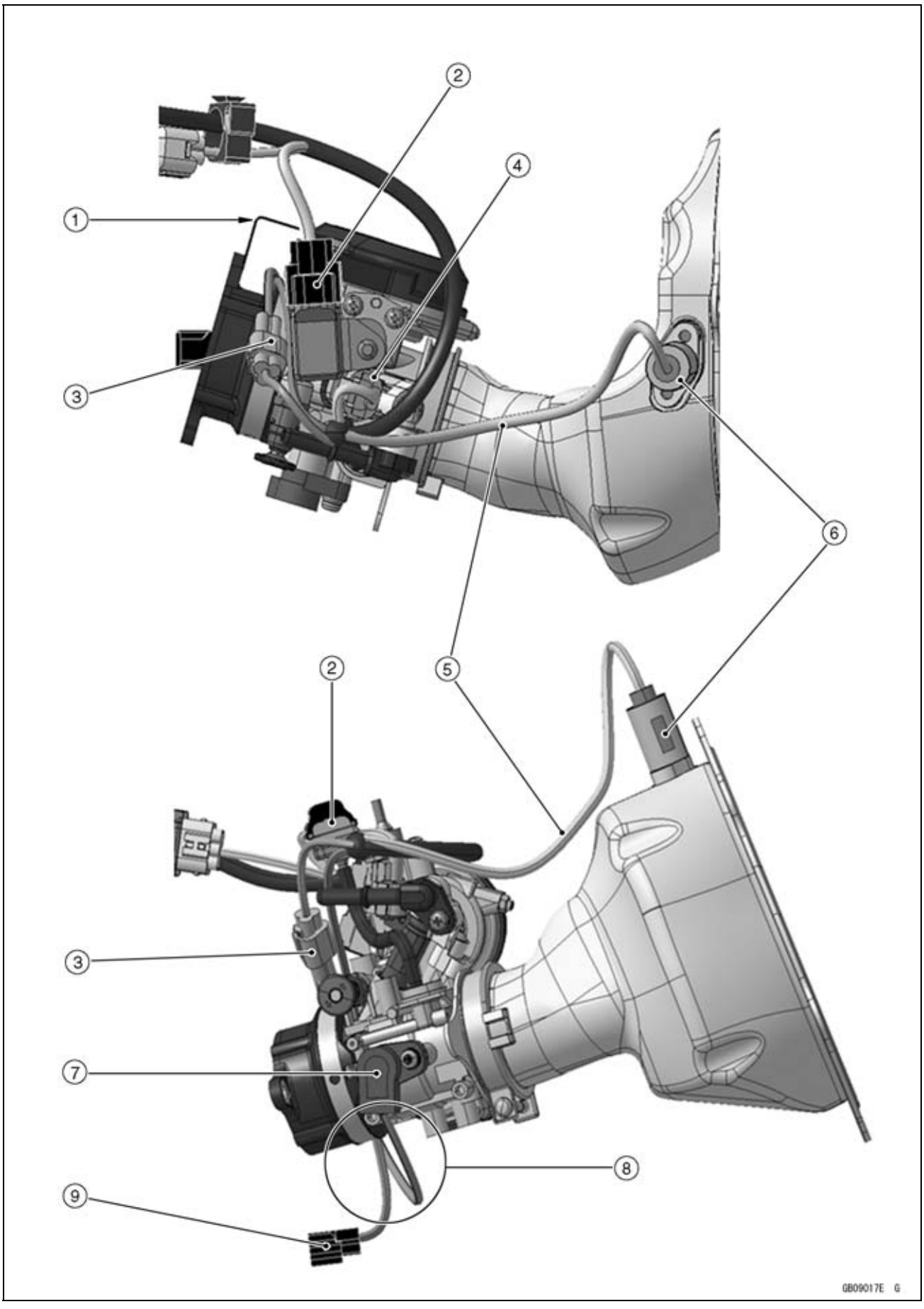

Cable, Wire, and Hose Routing

1. Clamp (Run the throttle sensor lead inside of the clamp.)
2. Intake Air Pressure Sensor
3. Throttle Sensor Connector
4. Fuel Injector Connector
5. Intake Air Temperature Sensor Lead
6. Intake Air Temperature Sensor
7. Throttle Sensor
8. Run the throttle sensor lead to the front side of the throttle body assy.
9. Water Temperature Sensor Connector

Cable, Wire, and Hose Routing

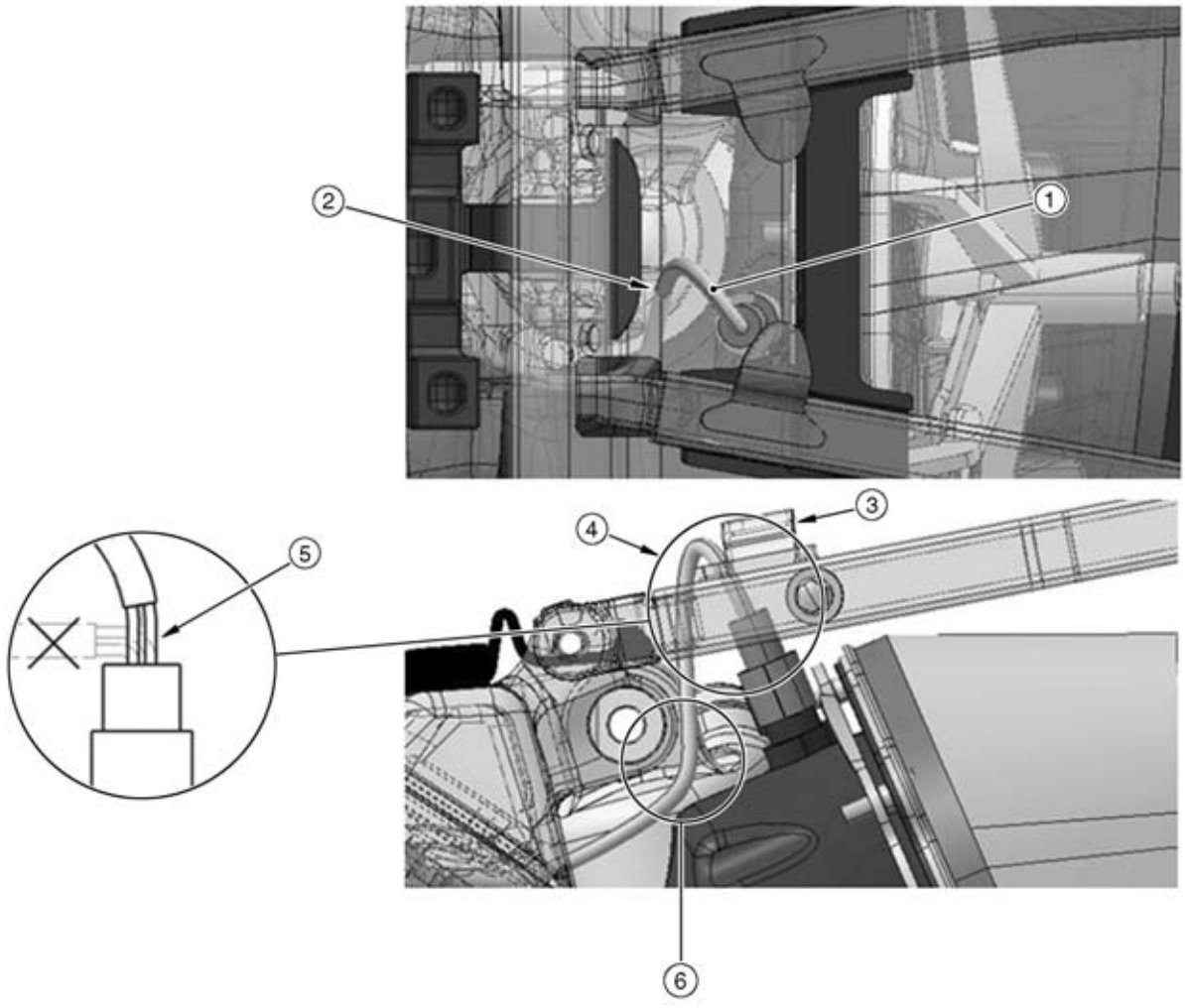

1. Intake Air Temperature Sensor Lead
2. Run the intake air temperature sensor lead through the hole of the guide as shown in the figure.
3. Bracket
4. Do not show up the intake air temperature sensor lead above the bracket as shown in the figure.
5. Do not bend the intake air temperature sensor lead end as shown in the figure.
6. Run the intake air temperature sensor lead above and left side of the rear shock absorber upper part. Make sure that the intake air temperature sensor lead are not caught between the rear shock absorber upper part and rear shock absorber mounting bracket on the frame.

Cable, Wire, and Hose Routing

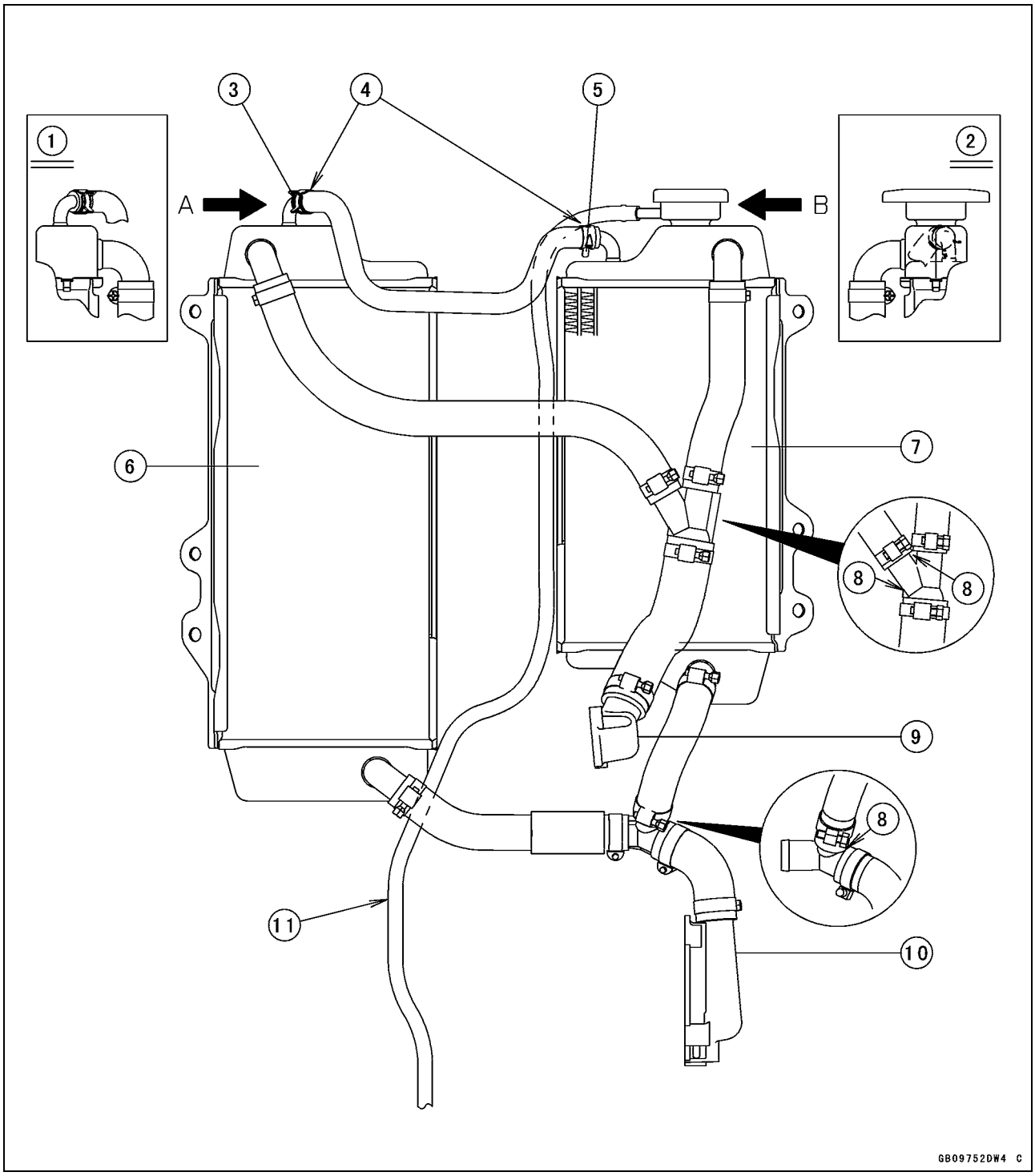

1. Viewed A
2. Viewed B
3. Clamp (Face the claw portion leftward.)
4. Face the white mark of the hoses upward.
5. Clamp (Face the claw portion forward and downward.)
6. Left Radiator
7. Right Radiator
8. Align the rib of the joint pipe to the white mark of the hoses.
9. Water Hose Fitting (Cylinder Head)
10. Water Pump Cover
11. Run the radiator overflow hose outside of the middle engine bracket.

Position all clamp screw heads as shown in the figure.

Cable, Wire, and Hose Routing

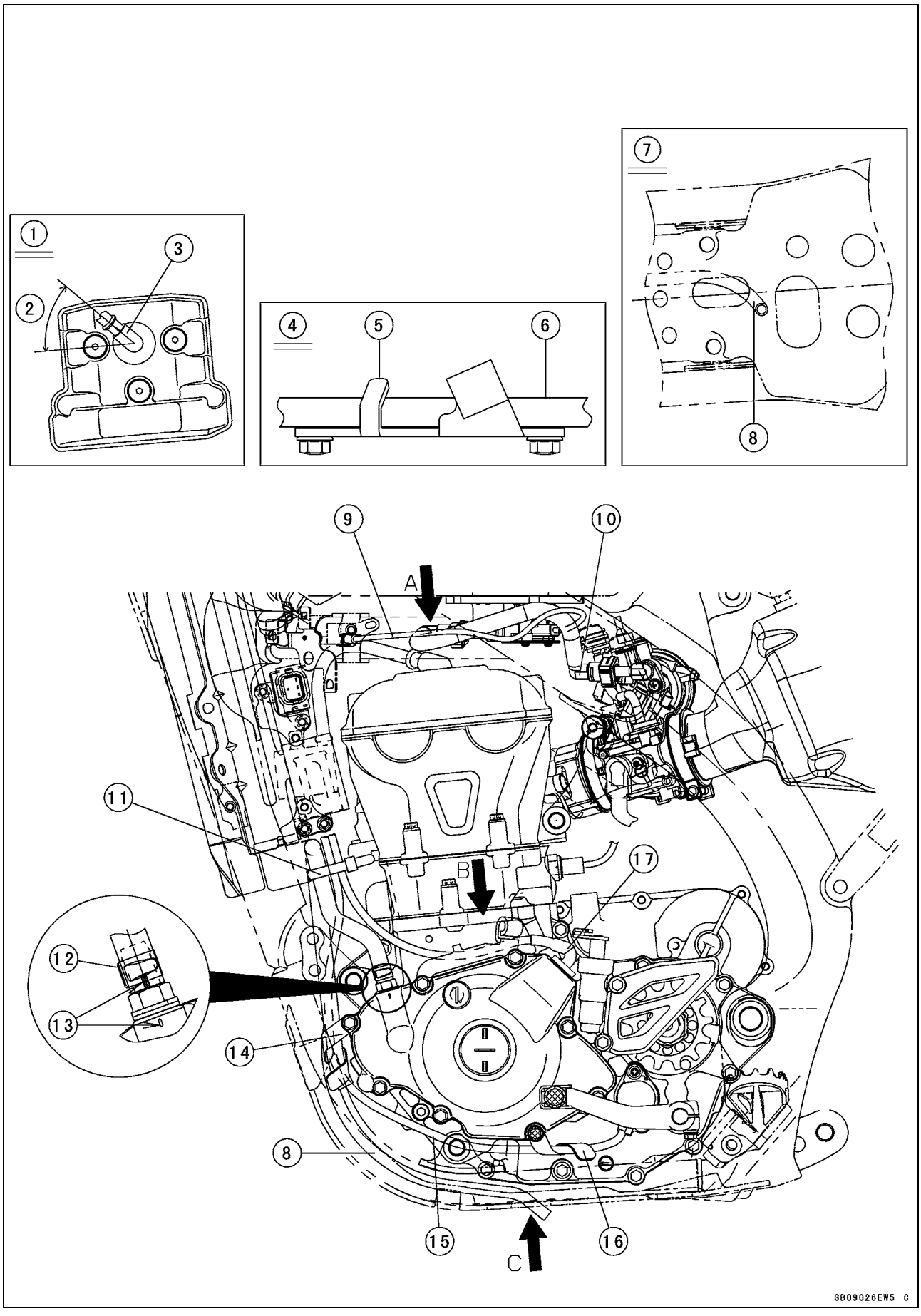

Cable, Wire, and Hose Routing

1. Viewed A
2. 45°
3. Spark Plug Cap
4. Viewed B
5. Run the magneto lead under the claw of the holder.
6. Magneto Lead
7. Viewed C
8. Radiator Overflow Hose
9. Run the fuel pump lead over the fuel hose and between the fuel hose and frame.
10. Paint Mark
11. Tighten the band with the 5 to 7 notches.
12. Face the claw portion leftward.
13. Align the white mark on the breather hose and embossed mark.
14. Clamp (Hold the radiator overflow hose and the gear position switch lead.)
15. Gear Position Switch Lead
16. Clamp (Hold the gear position switch lead.)
17. Run the magneto lead under the clutch cable.

Cable, Wire, and Hose Routing

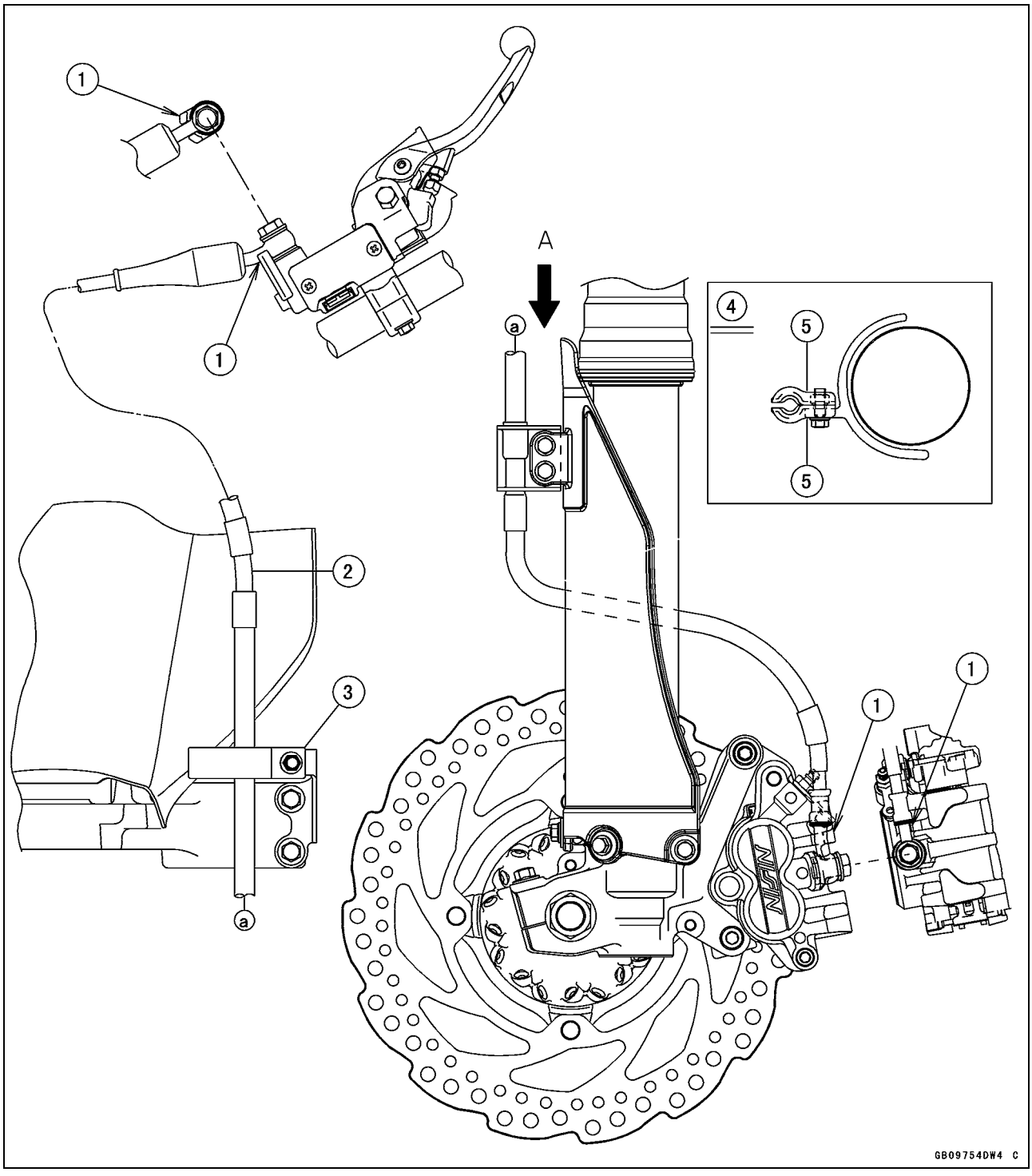

1. Touch the front brake hose fitting to the stopper.
2. Brake Hose
3. Clamp
4. Viewed A
5. Clamps

Cable, Wire, and Hose Routing

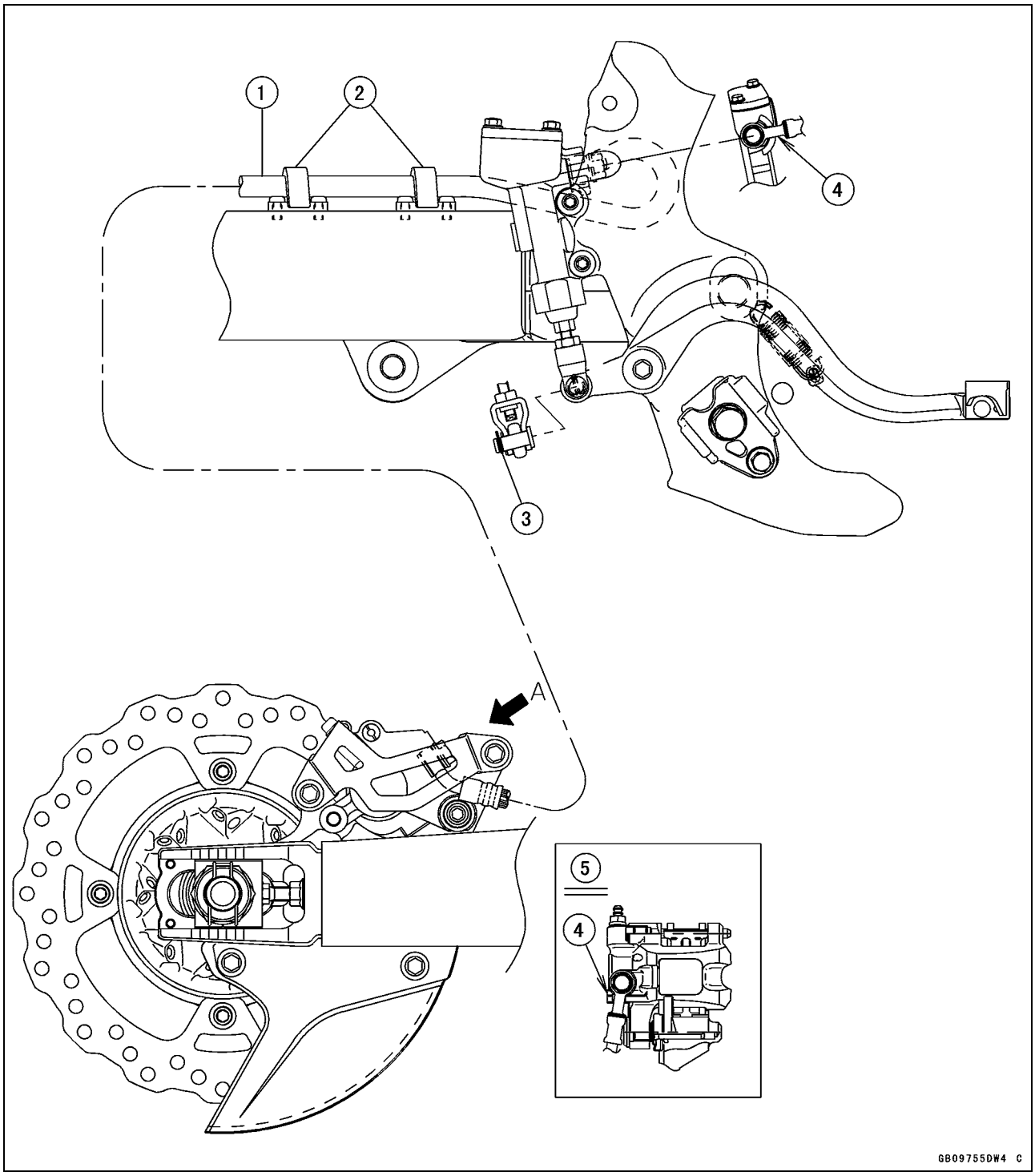

1. Brake Hose
2. Clamps
3. Cotter Pin
4. Touch the rear brake hose fitting to the stopper.
5. Viewed A

Troubleshooting Guide

NOTE

○*Refer to the Fuel System (DFI) chapter for most of DFI trouble shooting guide.*

○*This is not an exhaustive list, giving every possible cause for each problem listed. It is meant simply as a rough guide to assist the troubleshooting for some of the more common difficulties.*

Engine Doesn't Start, Starting Difficulty:

Engine won't turn over:
- Valve seizure
- Valve lifter seizure
- Cylinder, piston seizure
- Crankshaft seizure
- Connecting rod small end, big end seizure
- Transmission gear or bearing seizure
- Camshaft seizure
- Kick shaft return spring broken
- Kick ratchet gear not engaging
- Balancer bearing seizure

No fuel flow:
- No fuel in fuel tank
- Fuel tank cap air vent obstructed
- Fuel line clogged
- Fuel filter clogged

Engine flooded:
- Clean spark plug and adjust plug gap
- Starting technique faulty
- (When flooded, do not crank the engine with the throttle fully opened. This promotes engine flood because more fuel is supplied automatically by DFI.)

No spark; spark weak:
- Spark plug dirty, broken, or gap maladjusted
- Spark plug cap or spark plug lead trouble
- Spark plug cap shorted or not in good contact
- Spark plug incorrect heat value
- ECU trouble
- Crankshaft sensor trouble
- Ignition coil trouble
- Engine stop switch shorted
- Wiring shorted or open
- Flywheel damage

Compression Low:
- Spark plug loose
- Cylinder head not sufficiently tightened down
- No valve clearance
- Cylinder, piston worn
- Piston ring bad (worn, weak, broken, or sticking)
- Piston ring/groove clearance excessive
- Cylinder head gasket damaged
- Cylinder head warped
- Valve spring broken or weak
- Valve not seating properly (valve bent, deformed, worn, or carbon accumulation on the seating surface)
- Decompression trouble

Poor Running at Low Speed:

Spark weak:
- Spark plug dirty, broken, or gap maladjusted
- Spark plug cap or spark plug lead trouble
- Spark plug cap shorted or not in good contact
- Spark plug incorrect heat value
- ECU trouble
- Crankshaft sensor trouble
- Flywheel damaged
- Ignition coil trouble
- Wiring connector not in good contact

Fuel/air mixture incorrect:
- Air cleaner clogged, poorly sealed, or missing
- Fuel tank air vent obstructed
- Fuel pump trouble
- Throttle body assy holder loose
- Air cleaner duct loose

Compression low:
- Spark plug loose
- Cylinder head not sufficiently tightened down
- No valve clearance
- Cylinder, piston worn
- Piston ring bad (worn, weak, broken, or sticking)
- Piston ring/groove clearance excessive
- Cylinder head gasket damaged
- Cylinder head warped
- Valve spring broken or weak
- Valve not seating properly (valve bent, deformed, worn, or carbon accumulation on the seating surface)
- Decompression trouble

Other:
- ECU trouble
- Engine oil level to high
- Engine oil viscosity too high
- Brake dragging
- Drive train trouble
- Engine overheating
- Clutch slipping

Poor Running or No Power at High Speed:

Firing incorrect:
- Spark plug dirty, broken, or gap maladjusted

Troubleshooting Guide

Spark plug cap or spark plug lead trouble
Spark plug cap shorted or not in good contact
Spark plug incorrect heat value
ECU trouble
Crankshaft sensor trouble
Flywheel damage
Ignition coil trouble
Wiring connector not in good contact

Fuel/air mixture incorrect:
Air cleaner clogged, poorly sealed, or missing
Air cleaner duct loose
Water or foreign matter in fuel
Throttle body assy holder loose
Fuel to injector insufficient
Fuel tank air vent obstructed
Fuel line clogged
Fuel pump trouble

Compression low:
Spark plug loose
Cylinder head not sufficiently tightened down
No valve clearance
Cylinder, piston worn
Piston ring bad (worn, weak, broken, or sticking)
Piston ring/groove clearance excessive
Cylinder head gasket damaged
Cylinder head warped
Valve spring broken or weak
Valve not seating properly (valve bent, deformed, worn, carbon accumulation on the seating surface.)
Decompression trouble

Knocking:
Carbon built up in combustion chamber
Fuel poor quality or incorrect
Spark plug incorrect heat valve
ECU trouble

Other:
Throttle valve won't fully open
Brake dragging
Air cleaner clogged
Water or foreign matter in fuel
Clutch slipping
Overheating
Engine oil level too high
Engine oil viscosity too high
Drive train trouble
Crankshaft bearing worn or damage

Engine Overheating:

Firing incorrect:
Spark plug dirty, broken, or maladjusted
Spark plug incorrect
ECU trouble

Fuel/air mixture incorrect:
Throttle body assy holder loose
Air cleaner duct loose
Air cleaner poorly sealed, or missing
Air cleaner clogged

Compression high:
Carbon built up in combustion chamber

Engine load faulty:
Clutch slipping
Engine oil level too high
Engine oil viscosity too high
Brake dragging
Drive train trouble

Lubrication inadequate:
Engine oil level too low
Engine oil poor quality or incorrect

Coolant incorrect:
Coolant level too low
Coolant deteriorated

Cooling system component incorrect:
Radiator clogged
Radiator cap trouble
Water pump not rotating

Clutch Operation Faulty:

Clutch slipping:
No clutch lever play
Clutch cable maladjusted
Clutch inner cable sticking
Friction plate worn or warped
Steel plate worn or warped
Clutch spring broken or weak
Clutch release function trouble
Clutch hub or housing unevenly worn

Clutch not disengaging properly:
Clutch lever play excessive
Clutch spring compression uneven
Engine oil deteriorated
Engine oil viscosity too high
Engine oil level too high
Clutch housing seized
Clutch release function trouble
Clutch hub nut loose
Clutch plate warped or rough
Clutch hub spline damaged

Gear Shifting Faulty:

Doesn't go into gear; shift pedal doesn't return:
Clutch not disengaging
Shift fork bent, worn, or seized
Shift return spring pin loose
Shift return spring weak or broken
Shift shaft lever broken
Pawl guide plate broken
Shift pawl broken
Shift pawl spring tension lose

Gear seized
Gear positioning lever operation trouble
Shift drum broken

Jumps out of gear:
Shift fork ear worn, bent
Gear groove worn
Gear dogs and/or dog holes worn
Shift drum groove worn
Gear positioning lever spring weak or broken
Shift fork guide pin worn
Drive shaft, output shaft, and/or gear splines worn

Overshifts:
Gear positioning lever spring weak or broken
Pawl guide plate worn

Abnormal Engine Noise:

Knocking:
ECU trouble
Carbon built up in combustion chamber
Fuel poor quality or incorrect
Spark plug incorrect heat value
Overheating

Piston slap:
Cylinder/piston clearance excessive
Cylinder, piston worn
Connecting rod bent
Piston pin, piston pin hole worn

Valve noise:
Valve clearance incorrect
Valve spring broken or weak
Camshaft bearing or cam face worn
Valve lifter worn

Other noise:
Connecting rod big end, small end clearance excessive
Piston ring worn, broken, or stuck
Piston seizure, damage
Cylinder head gasket leaking
Exhaust pipe leaking at cylinder head connection
Crankshaft runout excessive
Engine mounts loose
Crankshaft bearing worn
Camshaft chain tensioner trouble
Camshaft chain, sprocket, chain guide worn
Primary gear worn or damaged
Decompressor spring broken
Magneto flywheel loose

Abnormal Drive Train Noise:

Clutch noise:
Clutch housing finger and friction plate tang worn
Clutch housing gear worn
Metal chips jammed in clutch housing gear teeth

Transmission noise:
Bearings worn
Transmission gears worn or chipped
Metal chips jammed in gear teeth
Engine oil insufficient, low viscosity
Kick ratchet gear not properly disengaging from kick gear
Kick shaft idle gear worn or chipped

Drive chain noise:
Drive chain maladjusted
Drive chain worn
Rear and/or engine sprocket worn
Drive chain lubrication insufficient
Rear wheel misaligned

Abnormal Frame Noise:

Front fork noise:
Oil insufficient or too thin
Spring weak or broken (KX450FC)
Front fork air pressure incorrect (KX450FD ~)
Front fork air pressure high (KX450FC)

Rear shock absorber noise:
Shock absorber trouble
Spring weak or broken

Disc brake noise:
Pad surface glazed
Disc warped
Caliper trouble
Pad installed incorrectly
Master cylinder damaged

Other noise:
Bracket, nut, bolt, etc., not properly mounted or tightened

Abnormal Exhaust Color:

White smoke:
Piston oil ring worn
Cylinder worn
Valve oil seal damaged
Valve guide worn
Engine oil level too high

Black smoke:
Air cleaner element clogged

Brown smoke:
Air cleaner duct loose
Air cleaner clogged
Air cleaner poorly sealed or missing

Handling and/or Stability Unsatisfactory:

Handlebar hard to turn:
Cable, hose, wire routing incorrect
Steering stem nut too tight

Troubleshooting Guide

Steering stem bearing damaged
Steering stem bearing lubrication inadequate
Steering stem bent
Tire air pressure too low

Handlebar shakes or excessively vibrates:
Tire worn
Swingarm pivot bearings worn
Rim warped, or not balanced
Spokes loose
Wheel bearing worn
Handlebar clamp bolt loose
Steering stem head nut loose
Front, rear axle runout excessive

Handlebar pulls to one side:
Frame bent
Rear wheel misalignment
Swingarm bent or twisted
Swingarm pivot shaft bent
Steering maladjusted
Steering stem bent
Front fork bent
Right and left front fork oil level uneven

Suspension operation trouble:
(Too hard)
Tire air pressure too high
Front fork oil excessive
Front fork oil viscosity too high
Rear shock absorber adjustment too hard
Front fork bent
Front fork air pressure too high

(Too soft)
Front fork oil insufficient or leaking
Front fork oil viscosity too low
Rear shock absorber adjusted too soft
Front fork air pressure too low (KX450FD ~)
Front fork, rear shock absorber spring weak (KX450FC)
Rear shock absorber spring weak (KX450FD ~)
Rear shock absorber oil or gas leaking
Tire air pressure too low

Brake Doesn't Hold:
Air in brake system
Pad, disc worn
Brake fluid leakage
Contaminated pad
Brake fluid deteriorated
Brake master cylinder cups damaged
Master cylinder scratched inside
Disc warped

MODEL APPLICATION

Year	Model	Beginning Frame No.
2012	KX450FC	JKAKXGFC□CA000001 JKAKX450FFA000001
2013	KX450FD	JKAKXGFC□DA012001 JKAKX450FFA012001
2014	KX450FE	JKAKXGFC□EA022001 JKAKX450FFA022001

□:This digit in the frame number changes from one machine to another.

Kawasaki
KAWASAKI HEAVY INDUSTRIES, LTD.
Motorcycle & Engine Company
Part No.99924-1448-03
Printed in Japan