Kawasaki

Z750R
Z750R ABS

Motorcycle Service Manual

Quick Reference Guide

General Information	1
Periodic Maintenance	2
Fuel System (DFI)	3
Cooling System	4
Engine Top End	5
Clutch	6
Engine Lubrication System	7
Engine Removal/Installation	8
Crankshaft/Transmission	9
Wheels/Tires	10
Final Drive	11
Brakes	12
Suspension	13
Steering	14
Frame	15
Electrical System	16
Appendix	17

This quick reference guide will assist you in locating a desired topic or procedure.

- Bend the pages back to match the black tab of the desired chapter number with the black tab on the edge at each table of contents page.
- Refer to the sectional table of contents for the exact pages to locate the specific topic required.

Kawasaki

Z750R
Z750R ABS

Motorcycle Service Manual

All rights reserved. No parts of this publication may be reproduced, stored in a retrieval system, or transmitted in any form or by any means, electronic mechanical photocopying, recording or otherwise, without the prior written permission of Quality Assurance Division/Motorcycle & Engine Company/Kawasaki Heavy Industries, Ltd., Japan.

No liability can be accepted for any inaccuracies or omissions in this publication, although every possible care has been taken to make it as complete and accurate as possible.

The right is reserved to make changes at any time without prior notice and without incurring an obligation to make such changes to products manufactured previously. See your Motorcycle dealer for the latest information on product improvements incorporated after this publication.

All information contained in this publication is based on the latest product information available at the time of publication. Illustrations and photographs in this publication are intended for reference use only and may not depict actual model component parts.

© 2010 Kawasaki Heavy Industries, Ltd.

Second Edition (1) : Apr. 13, 2011

LIST OF ABBREVIATIONS

A	ampere(s)	lb	pound(s)
ABDC	after bottom dead center	m	meter(s)
AC	alternating current	min	minute(s)
ATDC	after top dead center	N	newton(s)
BBDC	before bottom dead center	Pa	pascal(s)
BDC	bottom dead center	PS	horsepower
BTDC	before top dead center	psi	pound(s) per square inch
°C	degree(s) Celsius	r	revolution
DC	direct current	rpm	revolution(s) per minute
F	farad(s)	TDC	top dead center
°F	degree(s) Fahrenheit	TIR	total indicator reading
ft	foot, feet	V	volt(s)
g	gram(s)	W	watt(s)
h	hour(s)	Ω	ohm(s)
L	liter(s)		

COUNTRY AND AREA CODES

AT	Austria	DE	Germany
AU	Australia	GB	United Kingdom
BR	Brazil	MY	Malaysia
CH	Switzerland	WVTA	Whole Vehicle Type Approval

Foreword

This manual is designed primarily for use by trained mechanics in a properly equipped shop. However, it contains enough detail and basic information to make it useful to the owner who desires to perform his own basic maintenance and repair work. A basic knowledge of mechanics, the proper use of tools, and workshop procedures must be understood in order to carry out maintenance and repair satisfactorily. Whenever the owner has insufficient experience or doubts his ability to do the work, all adjustments, maintenance, and repair should be carried out only by qualified mechanics.

In order to perform the work efficiently and to avoid costly mistakes, read the text, thoroughly familiarize yourself with the procedures before starting work, and then do the work carefully in a clean area. Whenever special tools or equipment are specified, do not use makeshift tools or equipment. Precision measurements can only be made if the proper instruments are used, and the use of substitute tools may adversely affect safe operation.

For the duration of the warranty period, we recommend that all repairs and scheduled maintenance be performed in accordance with this service manual. Any owner maintenance or repair procedure not performed in accordance with this manual may void the warranty.

To get the longest life out of your vehicle.

- Follow the Periodic Maintenance Chart in the Service Manual.
- Be alert for problems and non-scheduled maintenance.
- Use proper tools and genuine Kawasaki Motorcycle parts. Special tools, gauges, and testers that are necessary when servicing Kawasaki motorcycles are introduced by the Service Manual. Genuine parts provided as spare parts are listed in the Parts Catalog.
- Follow the procedures in this manual carefully. Don't take shortcuts.
- Remember to keep complete records of maintenance and repair with dates and any new parts installed.

How to Use This Manual

In this manual, the product is divided into its major systems and these systems make up the manual's chapters. The Quick Reference Guide shows you all of the product's system and assists in locating their chapters. Each chapter in turn has its own comprehensive Table of Contents.

For example, if you want ignition coil information, use the Quick Reference Guide to locate the Electrical System chapter. Then, use the Table of Contents on the first page of the chapter to find the Ignition Coil section.

Whenever you see symbols, heed their instructions! Always follow safe operating and maintenance practices.

⚠ DANGER

DANGER indicates a hazardous situation which, if not avoided, will result in death or serious injury.

⚠ WARNING

WARNING indicates a hazardous situation which, if not avoided, could result in death or serious injury.

NOTICE

NOTICE is used to address practices not related to personal injury.

This manual contains four more symbols which will help you distinguish different types of information.

NOTE

○*This note symbol indicates points of particular interest for more efficient and convenient operation.*

- ● Indicates a procedural step or work to be done.
- ○ Indicates a procedural sub-step or how to do the work of the procedural step it follows. It also precedes the text of a NOTE.
- ★ Indicates a conditional step or what action to take based on the results of the test or inspection in the procedural step or sub-step it follows.

In most chapters an exploded view illustration of the system components follows the Table of Contents. In these illustrations you will find the instructions indicating which parts require specified tightening torque, oil, grease or a locking agent during assembly.

General Information

Table of Contents

Before Servicing 1-2
Model Identification..... 1-7
General Specifications..... 1-9
Unit Conversion Table 1-12

Before Servicing

Before starting to perform an inspection service or carry out a disassembly and reassembly operation on a motorcycle, read the precautions given below. To facilitate actual operations, notes, illustrations, photographs, cautions, and detailed descriptions have been included in each chapter wherever necessary. This section explains the items that require particular attention during the removal and reinstallation or disassembly and reassembly of general parts.

Especially note the following.

Battery Ground

Before completing any service on the motorcycle, disconnect the battery cables from the battery to prevent the engine from accidentally turning over. Disconnect the ground cable (–) first and then the positive (+). When completed with the service, first connect the positive (+) cable to the positive (+) terminal of the battery then the negative (–) cable to the negative terminal.

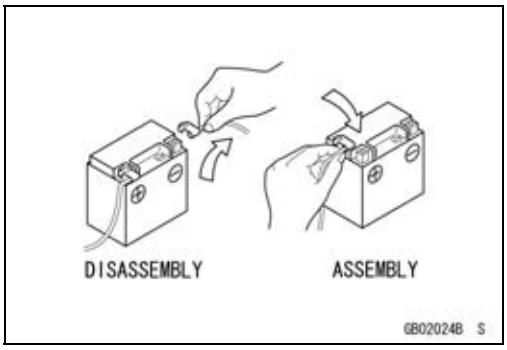

Edges of Parts

Lift large or heavy parts wearing gloves to prevent injury from possible sharp edges on the parts.

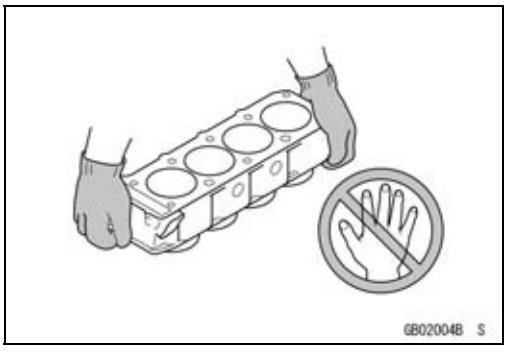

Solvent

Use a high-flush point solvent when cleaning parts. High -flush point solvent should be used according to directions of the solvent manufacturer.

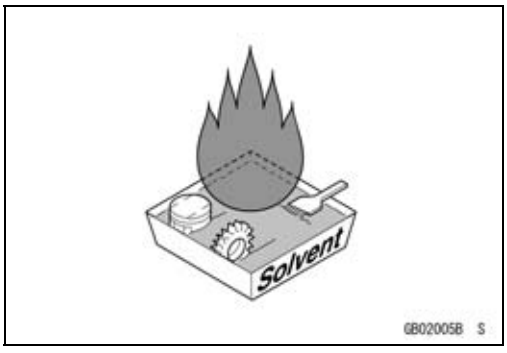

Cleaning Vehicle before Disassembly

Clean the vehicle thoroughly before disassembly. Dirt or other foreign materials entering into sealed areas during vehicle disassembly can cause excessive wear and decrease performance of the vehicle.

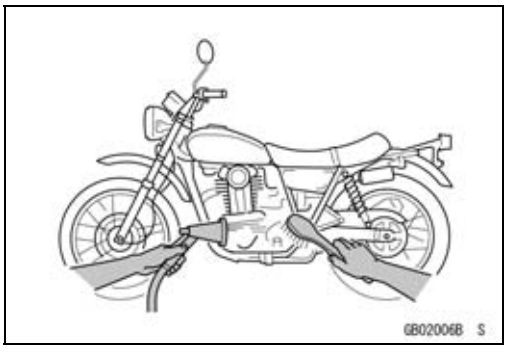

Before Servicing

Arrangement and Cleaning of Removed Parts

Disassembled parts are easy to confuse. Arrange the parts according to the order the parts were disassembled and clean the parts in order prior to assembly.

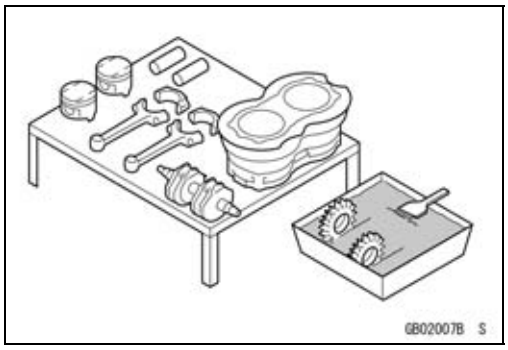

Storage of Removed Parts

After all the parts including subassembly parts have been cleaned, store the parts in a clean area. Put a clean cloth or plastic sheet over the parts to protect from any foreign materials that may collect before re-assembly.

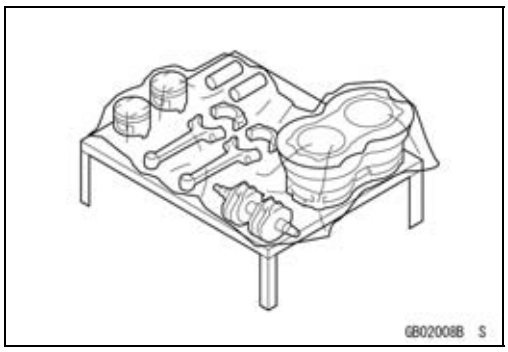

Inspection

Reuse of worn or damaged parts may lead to serious accident. Visually inspect removed parts for corrosion, discoloration, or other damage. Refer to the appropriate sections of this manual for service limits on individual parts. Replace the parts if any damage has been found or if the part is beyond its service limit.

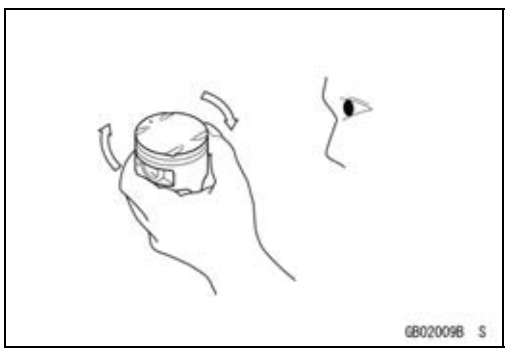

Replacement Parts

Replacement parts must be KAWASAKI genuine or recommended by KAWASAKI. Gaskets, O-rings, oil seals, grease seals, circlips, cotter pins or self-locking nuts must be replaced with new ones whenever disassembled.

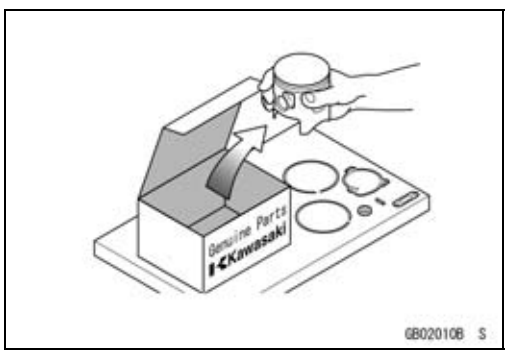

Assembly Order

In most cases assembly order is the reverse of disassembly, however, if assembly order is provided in this Service Manual, follow the procedures given.

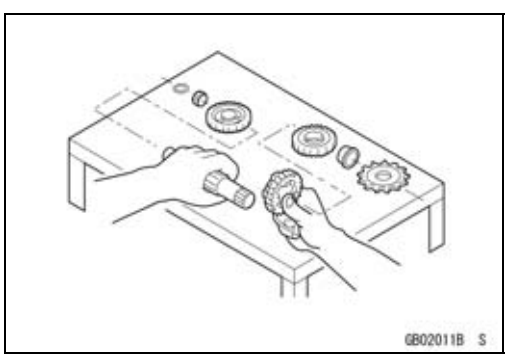

Before Servicing

Tightening Sequence

Generally, when installing a part with several bolts, nuts, or screws, start them all in their holes and tighten them to a snug fit. Then tighten them according to the specified sequence to prevent case warpage or deformation which can lead to malfunction. Conversely when loosening the bolts, nuts, or screws, first loosen all of them by about a quarter turn and then remove them. If the specified tightening sequence is not indicated, tighten the fasteners alternating diagonally.

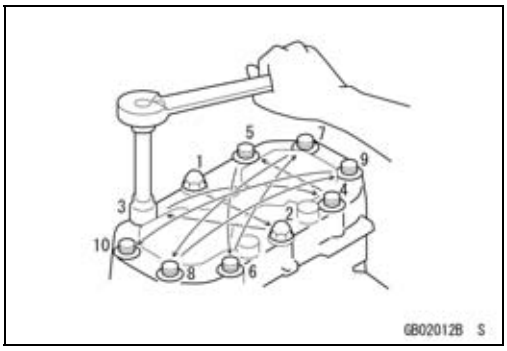

Tightening Torque

Incorrect torque applied to a bolt, nut, or screw may lead to serious damage. Tighten fasteners to the specified torque using a good quality torque wrench.

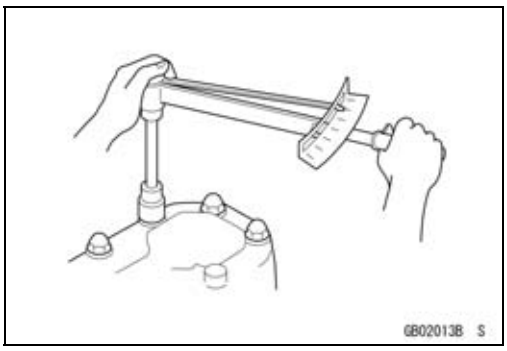

Force

Use common sense during disassembly and assembly, excessive force can cause expensive or hard to repair damage. When necessary, remove screws that have a non-permanent locking agent applied using an impact driver. Use a plastic-faced mallet whenever tapping is necessary.

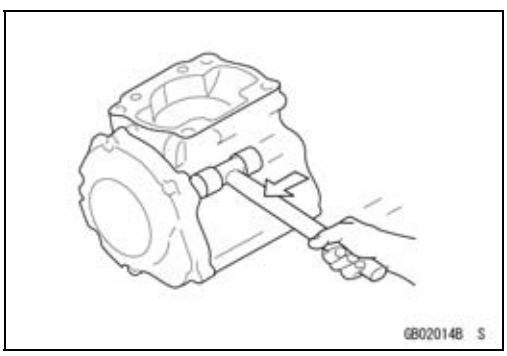

Gasket, O-ring

Hardening, shrinkage, or damage of both gaskets and O-rings after disassembly can reduce sealing performance. Remove old gaskets and clean the sealing surfaces thoroughly so that no gasket material or other material remains. Install the new gaskets and replace the used O-rings when re-assembling.

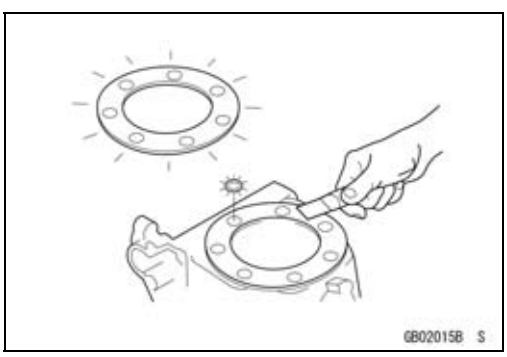

Liquid Gasket, Non-permanent Locking Agent

For applications that require Liquid Gasket or a Non-Permanent Locking Agent, clean the surfaces so that no oil residue remains before applying liquid gasket or non-permanent locking agent. Do not apply them excessively. Excessive application can clog oil passages and cause serious damage.

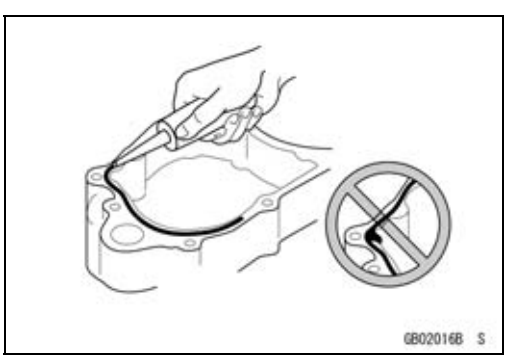

Before Servicing

Press

For items such as bearings or oil seals that must be pressed into place, apply small amount of oil to the contact area. Be sure to maintain proper alignment and use smooth movements when installing.

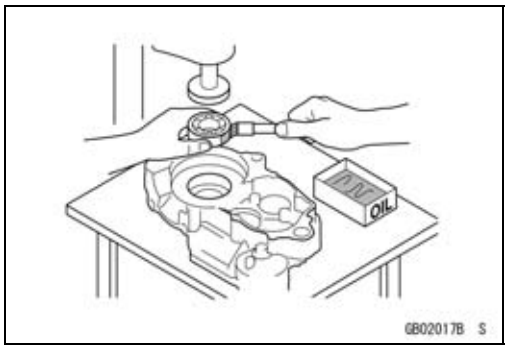

Ball Bearing and Needle Bearing

Do not remove pressed ball or needle unless removal is absolutely necessary. Replace with new ones whenever removed. Press bearings with the manufacturer and size marks facing out. Press the bearing into place by putting pressure on the correct bearing race as shown.

Pressing the incorrect race can cause pressure between the inner and outer race and result in bearing damage.

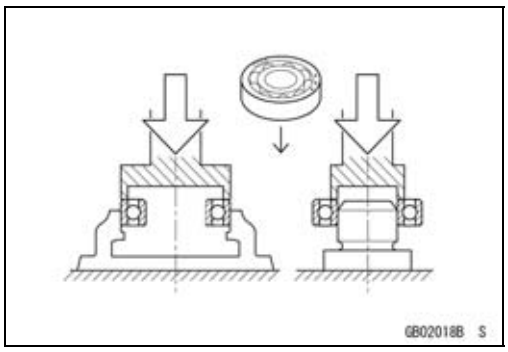

Oil Seal, Grease Seal

Do not remove pressed oil or grease seals unless removal is necessary. Replace with new ones whenever removed. Press new oil seals with manufacture and size marks facing out. Make sure the seal is aligned properly when installing.

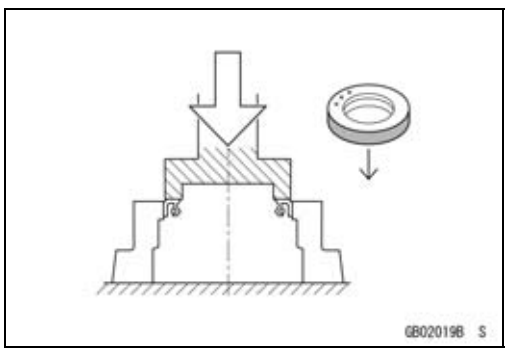

Apply specified grease to the lip of seal before installing the seal.

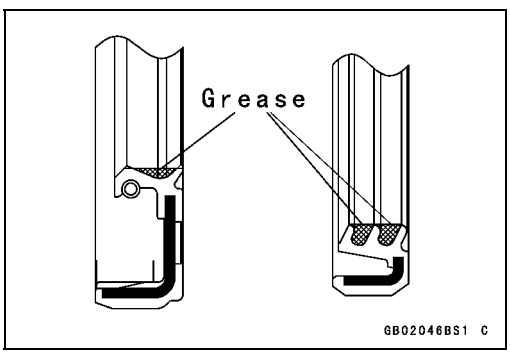

Circlips, Cotter Pins

Replace the circlips or cotter pins that were removed with new ones. Take care not to open the clip excessively when installing to prevent deformation.

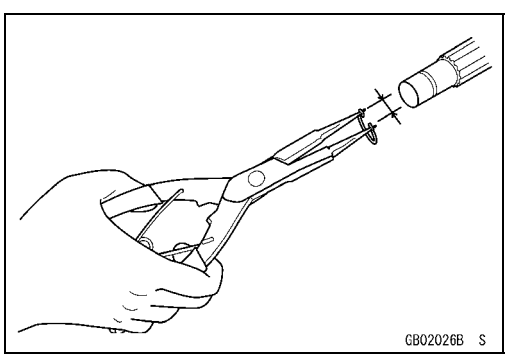

Before Servicing

Lubrication

It is important to lubricate rotating or sliding parts during assembly to minimize wear during initial operation. Lubrication points are called out throughout this manual, apply the specific oil or grease as specified.

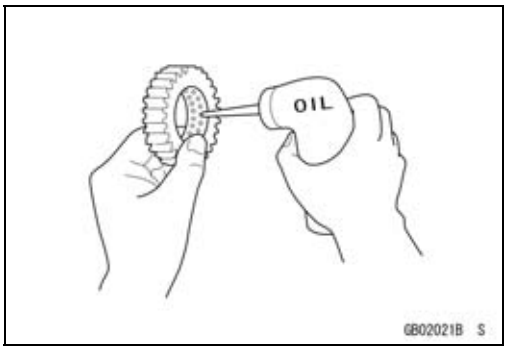

Direction of Engine Rotation

When rotating the crankshaft by hand, the free play amount of rotating direction will affect the adjustment. Rotate the crankshaft to positive direction (clockwise viewed from output side).

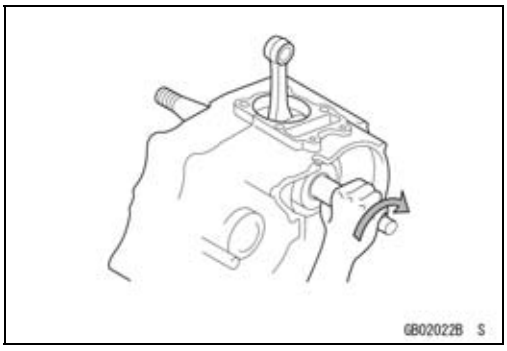

Electrical Wires

A two-color wire is identified first by the primary color and then the stripe color. Unless instructed otherwise, electrical wires must be connected to those of the same color.

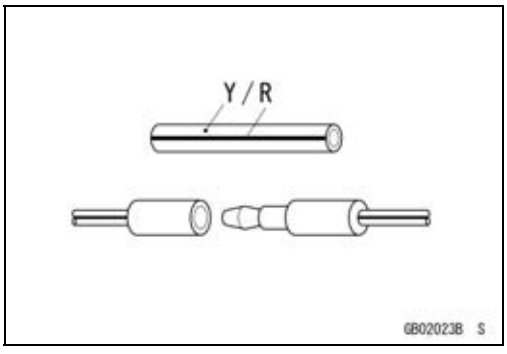

Instrument

Use a meter that has enough accuracy for an accurate measurement. Read the manufacture's instructions thoroughly before using the meter. Incorrect values may lead to improper adjustments.

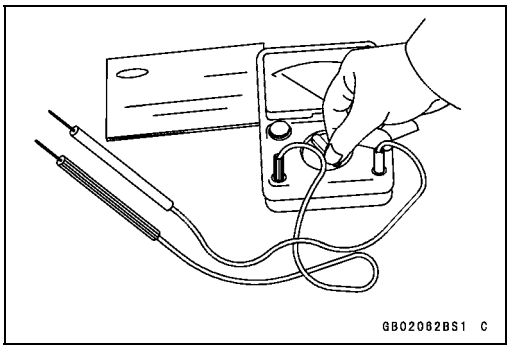

Model Identification

ZR750NB (Europe) Left Side View

ZR750NB (Europe) Right Side View

Model Identification

ZR750PB (Europe) Left Side View

ZR750PB (Europe) Right Side View

Frame Number

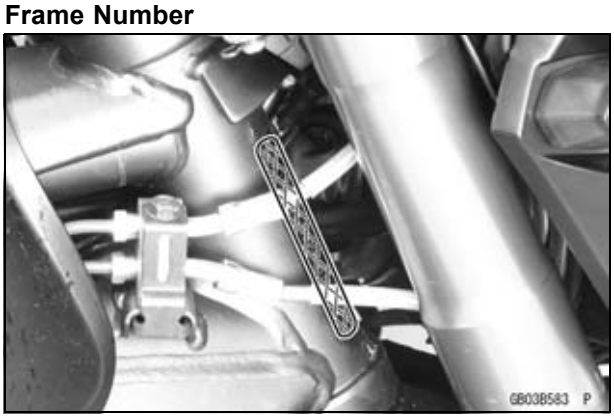

Engine Number

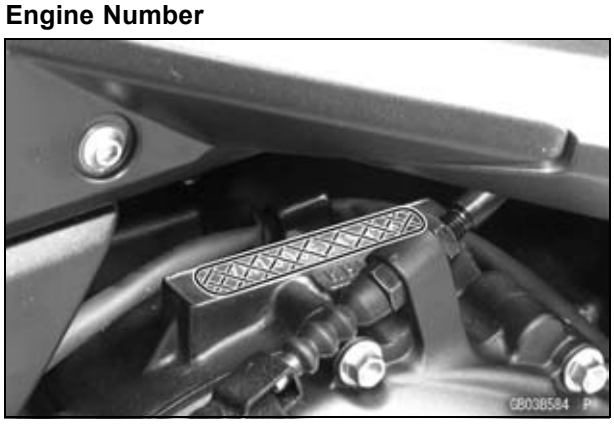

General Specifications

Items	ZR750NB ~, ZR750PB ~
Dimensions	
Overall Length	2 085 mm (82.09 in.)
Overall Width	795 mm (31.30 in.)
Overall Height	1 070 mm (42.13 in.)
Wheelbase	1 440 mm (56.69 in.)
Road Clearance	165 mm (6.50 in.)
Seat Height	825 mm (32.87 in.)
Curb Mass:	
ZR750N	224 kg (493.9 lb)
ZR750P	227 kg (500.5 lb)
Front:	
ZR750N	113 kg (249.2 lb)
ZR750P	114 kg (251.4 lb)
Rear:	
ZR750N	111 kg (244.8 lb)
ZR750P	113 kg (249.2 lb)
Fuel Tank Capacity	18.5 L (4.9 US gal.)
Performance	
Minimum Turning Radius	3.0 m (9.8 ft)
Engine	
Type	4-stroke, DOHC, 4-cylinder
Cooling System	Liquid-cooled
Bore and Stroke	68.4 × 50.9 mm (2.69 × 2.00 in.)
Displacement	748 cm³ (45.64 cu in.)
Compression Ratio	11.3 : 1
Maximum Horsepower	77.7 kW (106 PS) @10 500 r/min (rpm)
Maximum Torque	78.0 N·m (8.0 kgf·m, 57.5 ft·lb) @8 300 r/min (rpm)
Fuel System	FI (Fuel Injection) KEIHIN TTK32 × 4
Starting System	Electric starter
Ignition System	Battery and coil (transistorized)
Timing Advance	Electronically advanced (digital igniter)
Ignition Timing	From 10° BTDC @1 100 r/min (rpm) to 37° BTDC @5 000 r/min (rpm)
Spark Plug	NGK CR9EK, ND U27ETR
Cylinder Numbering Method	Left to right, 1-2-3-4
Firing Order	1-2-4-3
Valve Timing:	
Intake:	
Open	38° BTDC
Close	66° ABDC
Duration	284°

General Specifications

Items	ZR750NB ~, ZR750PB ~
Exhaust:	
Open	51° BBDC
Close	25° ATDC
Duration	256°
Lubrication System	Forced lubrication (wet sump)
Engine Oil:	
Type	API SG, SH, SJ, SL or SM with JASO MA, MA1 or MA2
Viscosity	SAE 10W-40
Capacity	3.8 L (4.0 US qt)
Drive Train	
Primary Reduction System:	
Type	Gear
Reduction Ratio	1.714 (84/49)
Clutch Type	Wet multi disc
Transmission:	
Type	6-speed, constant mesh, return shift
Gear Ratios:	
1st	2.571 (36/14)
2nd	1.941 (33/17)
3rd	1.556 (28/18)
4th	1.333 (28/21)
5th	1.200 (24/20)
6th	1.095 (23/21)
Final Drive System:	
Type	Chain drive
Reduction Ratio	2.867 (43/15)
Overall Drive Ratio	5.382 @Top gear
Frame	
Type	Tubular, diamond
Caster (Rake Angle)	24°
Trail	100 mm (3.94 in.)
Front Tire:	
Type	Tubeless
Size	120/70 ZR17 M/C (58W)
Rim Size	J17M/C × MT3.50
Rear Tire:	
Type	Tubeless
Size	180/55 ZR17 M/C (73W)
Rim Size	J17M/C × MT5.50
Front Suspension:	
Type	Telescopic fork
Wheel Travel	120 mm (4.72 in.)

General Specifications

Items	ZR750NB ~, ZR750PB ~
Rear Suspension:	
Type	Swingarm (uni-trak)
Wheel Travel	134 mm (5.28 in.)
Brake Type:	
Front	Dual discs
Rear	Single disc
Electrical Equipment	
Battery	12 V 8 Ah
Headlight:	
Type	Semi-sealed beam
Bulb:	
High Beam	12 V 55 W × 2
Low Beam	12 V 55 W
Tail/Brake Light	LED
Alternator:	
Type	Three-phase AC
Rated Output	24 A/14 V @5 000 r/min (rpm)

Specifications are subject to change without notice, and may not apply to every country.

Unit Conversion Table

Prefixes for Units:

Prefix	Symbol	Power
mega	M	× 1 000 000
kilo	k	× 1 000
centi	c	× 0.01
milli	m	× 0.001
micro	μ	× 0.000001

Units of Mass:

kg	×	2.205	=	lb
g	×	0.03527	=	oz

Units of Volume:

L	×	0.2642	=	gal (US)
L	×	0.2200	=	gal (IMP)
L	×	1.057	=	qt (US)
L	×	0.8799	=	qt (IMP)
L	×	2.113	=	pint (US)
L	×	1.816	=	pint (IMP)
mL	×	0.03381	=	oz (US)
mL	×	0.02816	=	oz (IMP)
mL	×	0.06102	=	cu in

Units of Force:

N	×	0.1020	=	kg
N	×	0.2248	=	lb
kg	×	9.807	=	N
kg	×	2.205	=	lb

Units of Length:

km	×	0.6214	=	mile
m	×	3.281	=	ft
mm	×	0.03937	=	in

Units of Torque:

N·m	×	0.1020	=	kgf·m
N·m	×	0.7376	=	ft·lb
N·m	×	8.851	=	in·lb
kgf·m	×	9.807	=	N·m
kgf·m	×	7.233	=	ft·lb
kgf·m	×	86.80	=	in·lb

Units of Pressure:

kPa	×	0.01020	=	kgf/cm²
kPa	×	0.1450	=	psi
kPa	×	0.7501	=	cmHg
kgf/cm²	×	98.07	=	kPa
kgf/cm²	×	14.22	=	psi
cmHg	×	1.333	=	kPa

Units of Speed:

km/h	×	0.6214	=	mph

Units of Power:

kW	×	1.360	=	PS
kW	×	1.341	=	HP
PS	×	0.7355	=	kW
PS	×	0.9863	=	HP

Units of Temperature:

$$\frac{9(°C+40)}{5} - 40 = °F \qquad \frac{5(°F+40)}{9} - 40 = °C$$

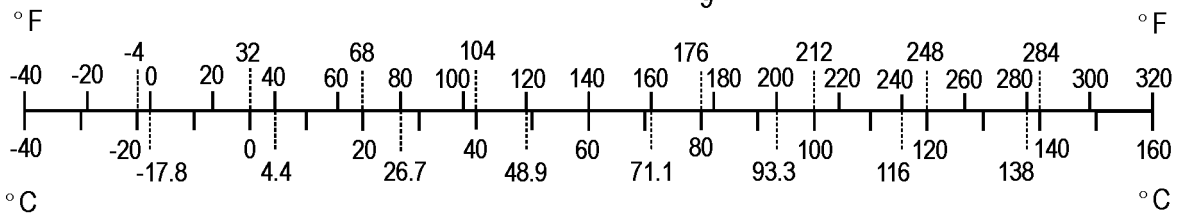

Periodic Maintenance

Table of Contents

Periodic Maintenance Chart 2-3
Torque and Locking Agent 2-7
Specifications 2-13
Special Tools 2-15
Periodic Maintenance Procedures 2-16
  Fuel System (DFI) 2-16
    Air Cleaner Element Cleaning 2-16
    Throttle Control System Inspection 2-16
    Engine Vacuum Synchronization Inspection 2-17
    Idle Speed Inspection 2-20
    Idle Speed Adjustment 2-21
    Fuel Hose Inspection (fuel leak, damage, installation condition) 2-21
  Cooling System 2-23
    Coolant Level Inspection 2-23
    Radiator Hose and Pipe Inspection (coolant leak, damage, installation condition) 2-23
  Engine Top End 2-24
    Valve Clearance Inspection 2-24
    Valve Clearance Adjustment 2-25
    Exhaust Butterfly Valve Cable Inspection 2-28
    Exhaust Butterfly Valve Cable Adjustment 2-29
  Air Suction System 2-32
    Air Suction System Damage Inspection 2-32
  Clutch 2-33
    Clutch Operation Inspection 2-33
  Wheels/Tires 2-34
    Air Pressure Inspection 2-34
    Wheel/Tire Damage Inspection 2-34
    Tire Tread Wear Inspection 2-34
    Wheel Bearing Damage Inspection 2-35
  Drive Train 2-36
    Drive Chain Lubrication Condition Inspection 2-36
    Drive Chain Slack Inspection 2-36
    Drive Chain Slack Adjustment 2-37
    Wheel Alignment Inspection 2-38
    Drive Chain Wear Inspection 2-38
    Chain Guide Wear Inspection 2-39
  Brake System 2-39
    Brake Fluid Leak (Brake Hose and Pipe) Inspection 2-39
    Brake Hose and Pipe Damage and Installation Condition Inspection 2-40
    Brake Operation Inspection 2-40
    Brake Fluid Level Inspection 2-40
    Brake Pad Wear Inspection 2-41
    Brake Light Switch Operation Inspection 2-42
  Suspensions 2-42
    Front Forks/Rear Shock Absorber Operation Inspection 2-42
    Front Fork Oil Leak Inspection 2-43
    Rear Shock Absorber Oil Leak Inspection 2-43
    Rocker Arm Operation Inspection 2-43
    Tie-Rod Operation Inspection 2-43
  Steering System 2-44

Steering Play Inspection 2-44
Steering Play Adjustment 2-44
Steering Stem Bearing Lubrication 2-45
Electrical System 2-46
Spark Plug Condition Inspection 2-46
Lights and Switches Operation Inspection 2-47
Headlight Aiming Inspection 2-49
Sidestand Switch Operation Inspection 2-50
Engine Stop Switch Operation Inspection 2-51
Others 2-51
Chassis Parts Lubrication 2-51
Bolts, Nuts and Fasteners Tightness Inspection 2-53
Replacement Parts 2-54
Air Cleaner Element Replacement 2-54
Fuel Hose Replacement 2-55
Coolant Change 2-57
Radiator Hose and O-ring Replacement 2-59
Engine Oil Change 2-59
Oil Filter Replacement 2-60
Brake Hose and Pipe Replacement 2-61
Brake Fluid Change 2-63
Master Cylinder Rubber Parts Replacement 2-64
Caliper Rubber Parts Replacement 2-65
Spark Plug Replacement 2-68

Periodic Maintenance Chart

The scheduled maintenance must be done in accordance with this chart to keep the motorcycle in good running condition. **The initial maintenance is vitally important and must not be neglected.**

Periodic Inspection

FREQUENCY / ITEM	Whichever comes first ➡ ⬇ Every	* ODOMETER READING × 1 000 km (× 1 000 mile) 1 (0.6)	6 (3.75)	12 (7.5)	18 (11.25)	24 (15)	30 (18.75)	36 (22.5)	See Page
Fuel System									
Air cleaner element - clean					●			●	2-16
Throttle control system (play, smooth return, no drag) - inspect	year	●		●		●		●	2-16
Engine vacuum synchronization - inspect				●		●		●	2-17
Idle speed - inspect		●		●		●		●	2-20
Fuel leak (fuel hose and pipe) - inspect	year	●		●		●		●	2-21
Fuel hose and pipe damage - inspect	year	●		●		●		●	2-21
Fuel hose and pipe installation condition - inspect	year	●		●		●		●	2-21
Cooling System									
Coolant level - inspect		●		●		●		●	2-23
Coolant leak (water hose and pipe) - inspect	year	●		●		●		●	2-23
Water hose damage - inspect	year	●		●		●		●	2-23
Water hose installation condition - inspect	year	●		●		●		●	2-23
Engine Top End									
Valve clearance - inspect		Every 42 000 km (26 250 mile)							2-24
Exhaust butterfly valve cable - inspect		●	●	●	●	●	●	●	2-28
Air Suction System									
Air suction system damage - inspect				●		●		●	2-32
Clutch									
Clutch operation (play, disengagement, engagement) - inspect		●		●		●		●	2-33
Wheels and Tires									
Tire air pressure - inspect	year			●		●		●	2-34
Wheel/tire damage - inspect				●		●		●	2-34
Tire tread wear, abnormal wear - inspect				●		●		●	2-34
Wheel bearing damage - inspect	year			●		●		●	2-35

Periodic Maintenance Chart

FREQUENCY / ITEM	Whichever comes first ➡ ⬇ Every	* ODOMETER READING × 1 000 km (× 1 000 mile) 1 (0.6)	6 (3.75)	12 (7.5)	18 (11.25)	24 (15)	30 (18.75)	36 (22.5)	See Page
Drive Train									
Drive chain lubrication condition - inspect #	Every 600 km (400 mile)								2-36
Drive chain slack - inspect #	Every 1 000 km (600 mile)								2-36
Drive chain wear - inspect #				●		●		●	2-38
Drive chain guide wear - inspect				●		●		●	2-39
Brakes									
Brake fluid leak (brake hose and pipe) - inspect	year	●	●	●	●	●	●	●	2-39
Brake hose and pipe damage - inspect	year	●	●	●	●	●	●	●	2-40
Brake hose and pipe installation condition - inspect	year	●	●	●	●	●	●	●	2-40
Brake operation (effectiveness, play, no drag) - inspect	year	●	●	●	●	●	●	●	2-40
Brake fluid level - inspect	6 months	●	●	●	●	●	●	●	2-40
Brake pad wear - inspect #			●	●	●	●	●	●	2-41
Brake light switch operation - inspect		●	●	●	●	●	●	●	2-42
Suspension									
Front forks/rear shock absorber operation (damping and smooth stroke) - inspect				●		●		●	2-42
Front forks/rear shock absorber oil leak - inspect	year			●		●		●	2-43
Rocker arm operation - inspect				●		●		●	2-43
Tie-rods operation - inspect				●		●		●	2-43
Steering									
Steering play - inspect	year	●		●		●		●	2-44
Steering stem bearings - lubricate	2 years					●			2-45
Electrical System									
Spark plug condition - inspect				●		●		●	2-46
Lights and switches operation - inspect	year			●		●		●	2-47
Headlight aiming - inspect	year			●		●		●	2-49
Sidestand switch operation - inspect	year			●		●		●	2-50
Engine stop switch operation - inspect	year			●		●		●	2-51

Periodic Maintenance Chart

FREQUENCY / ITEM	Whichever comes first ➡ ⬇ Every	* ODOMETER READING × 1 000 km (× 1 000 mile) 1 (0.6)	6 (3.75)	12 (7.5)	18 (11.25)	24 (15)	30 (18.75)	36 (22.5)	See Page
Others									
Chassis parts - lubricate	year			●		●		●	2-51
Bolts and nuts tightness - inspect		●		●		●		●	2-53

#: Service more frequently when operating in severe conditions; dusty, wet, muddy, high speed or frequent starting/stopping.

*: For higher odometer readings, repeat at the frequency interval established here.

Periodic Maintenance Chart

Periodic Replacement Parts

FREQUENCY / ITEM	Whichever comes first ➡ ⬇ Every	* ODOMETER READING × 1 000 km (× 1 000 mile) 1 (0.6)	12 (7.5)	24 (15)	36 (22.5)	48 (30)	See Page
Air cleaner element # - replace					●		2-54
Fuel hose - replace	5 years						2-55
Coolant - change	3 years				●		2-57
Radiator hose and O-ring - replace	3 years				●		2-59
Engine oil # - replace	year	●	●	●	●	●	2-59
Oil filter - replace	year	●	●	●	●	●	2-60
Brake hose and pipe - replace	4 years					●	2-61
Brake fluid - change	2 years			●		●	2-63
Rubber parts of master cylinder and caliper - replace	4 years					●	2-64, 2-65
Spark plug - replace			●	●	●	●	2-68

#: Service more frequently when operating in severe conditions; dusty, wet, muddy, high speed or frequent starting/stopping.

*: For higher odometer readings, repeat at the frequency interval established here.

Torque and Locking Agent

The following tables list the tightening torque for the major fasteners requiring use of a non-permanent locking agent or silicone sealant etc.

Letters used in the “Remarks” column mean:
AL: Tighten the two clamp bolts alternately two times to ensure even tightening torque.
EO: Apply engine oil.
G: Apply grease.
HG: Apply high-temperature grease.
L: Apply a non-permanent locking agent.
MO: Apply molybdenum disulfide grease oil solution.
(mixture of the engine oil and molybdenum disulfide grease in a weight ratio 10 : 1)
R: Replacement Parts
S: Follow the specified tightening sequence.
Si: Apply silicone grease (ex. PBC grease).
SS: Apply silicone sealant.

Fastener	Torque			Remarks
	N·m	kgf·m	ft·lb	
Fuel System (DFI)				
Air Cleaner Duct Screws	3.8	0.39	34 in·lb	
Air Cleaner Housing Mounting Bolts	9.8	1.0	87 in·lb	
Air Cleaner Housing Tapping Screws	1.2	0.12	11 in·lb	
Air Duct Clamp Bolts	2.0	0.20	18 in·lb	
Bypass Screws	0.2	0.02	1.8 in·lb	
Camshaft Position Sensor Bolt	12	1.2	106 in·lb	
Crankshaft Sensor Bolts	5.9	0.60	52 in·lb	
Delivery Pipe Assy Mounting Screws	3.4	0.35	30 in·lb	
Exhaust Butterfly Valve Actuator Bracket Bolt	6.9	0.70	61 in·lb	
Exhaust Butterfly Valve Actuator Mounting Bolts	6.9	0.70	61 in·lb	
Exhaust Butterfly Valve Actuator Pulley Bolt	5.0	0.51	44 in·lb	
Fuel Pump Bolts	9.8	1.0	87 in·lb	L, S
Idle Adjusting Cable Clamp Screw	3.4	0.35	30 in·lb	
Oxygen Sensor (Equipped Models)	44.1	4.50	32.5	
Speed Sensor Bolt	12	1.2	106 in·lb	
Throttle Body Assy Holder Bolts	13	1.3	115 in·lb	
Throttle Body Assy Holder Clamp Bolts	2.0	0.20	18 in·lb	
Throttle Cable Plate Bolt	5.9	0.60	52 in·lb	
Throttle Link Holder Screws	2.0	0.20	18 in·lb	
Vehicle-down Sensor Bolts	6.0	0.61	53 in·lb	
Water Temperature Sensor	25	2.5	18	
Cooling System				
Coolant Drain Bolt (Cylinder)	9.8	1.0	87 in·lb	
Coolant Drain Bolt (Water Pump)	11	1.1	97 in·lb	
Radiator Bracket Mounting Bolt	6.9	0.70	61 in·lb	
Radiator Lower Bolt	6.9	0.70	61 in·lb	
Radiator Upper Bolts	6.9	0.70	61 in·lb	
Radiator (Water) Hose Clamp Screws	3.0	0.31	27 in·lb	
Reserve Tank Bolts	9.8	1.0	87 in·lb	

Torque and Locking Agent

Fastener	Torque			Remarks
	N·m	kgf·m	ft·lb	
Thermostat Bracket Bolt	6.9	0.70	61 in·lb	
Thermostat Housing Ground Bolt	6.9	0.70	61 in·lb	
Thermostat Housing Screws	5.9	0.60	52 in·lb	
Water Pipe Bolts	11	1.1	97 in·lb	L
Water Pump Cover Bolts	11	1.1	97 in·lb	
Water Pump Impeller Bolt	9.8	1.0	87 in·lb	
Water Temperature Sensor	25	2.5	18	
Engine Top End				
Air Suction Valve Cover Bolts	9.8	1.0	87 in·lb	
Camshaft Cap Bolts (L = 45 mm)	12	1.2	106 in·lb	S
Camshaft Cap Bolts (L = 40 mm)	12	1.2	106 in·lb	S
Camshaft Chain Tensioner Cap Bolt	20	2.0	15	
Camshaft Chain Tensioner Mounting Bolts	11	1.1	97 in·lb	
Coolant Drain Bolt (Cylinder)	9.8	1.0	87 in·lb	
Cylinder Head Bolts (M10 New Bolts)	54	5.5	40	S
Cylinder Head Bolts (M10 Used Bolts)	49	5.0	36	S
Cylinder Head Bolts (M6)	12	1.2	106 in·lb	S
Cylinder Head Cover Bolts	9.8	1.0	87 in·lb	S
Cylinder Head Jacket Plugs	22	2.2	16	L
Exhaust Butterfly Valve Actuator Bracket Bolt	6.9	0.70	61 in·lb	
Exhaust Butterfly Valve Actuator Mounting Bolts	6.9	0.70	61 in·lb	
Exhaust Butterfly Valve Actuator Pulley Bolt	5.0	0.51	44 in·lb	
Exhaust Butterfly Valve Cable Adjuster Locknuts	6.9	0.70	61 in·lb	
Exhaust Butterfly Valve Cable Locknuts	6.9	0.70	61 in·lb	
Exhaust Butterfly Valve Cover Bolts	6.9	0.70	61 in·lb	
Exhaust Pipe Manifold Holder Nuts	17	1.7	13	S
Front Camshaft Chain Guide Bolt (Lower)	12	1.2	106 in·lb	
Front Camshaft Chain Guide Bolt (Upper)	25	2.5	18	
Muffler Body Clamp Bolt	15	1.5	11	S
Muffler Body Mounting Bolt	17	1.7	13	S
Muffler Body Mounting Nut	34	3.5	25	S
Muffler Body Side Cover Bolts	6.9	0.70	61 in·lb	
Rear Camshaft Chain Guide Bolt	25	2.5	18	
Spark Plugs	13	1.3	115 in·lb	
Throttle Body Assy Holder Bolts	13	1.3	115 in·lb	
Throttle Body Assy Holder Clamp Bolts	2.0	0.20	18 in·lb	
Clutch				
Clutch Cover Mounting Bolts	11	1.1	97 in·lb	
Clutch Hub Nut	135	13.8	99.6	R
Clutch Lever Clamp Bolts	7.8	0.80	69 in·lb	S
Clutch Spring Bolts	8.8	0.90	78 in·lb	
Oil Filler Plug	2.0	0.20	18 in·lb	

Torque and Locking Agent

Fastener	Torque			Remarks
	N·m	kgf·m	ft·lb	
Engine Lubrication System				
Coolant Drain Bolt (Water Pump)	11	1.1	97 in·lb	
Engine Oil Drain Bolt	29	3.0	21	
Oil Filter	17	1.7	13	G, R
Oil Filter Holder	78	8.0	58	EO
Oil Filler Plug	2.0	0.20	18 in·lb	
Oil Jet Nozzle Bolts	6.9	0.70	61 in·lb	L
Oil Pan Bolts	11	1.1	97 in·lb	
Oil Pan Side Dummy Bolts	6.9	0.70	61 in·lb	
Oil Passage Plugs	20	2.0	15	L
Oil Pipe Holder Bolts	13	1.3	115 in·lb	L
Oil Pressure Relief Valve	15	1.5	11	L
Oil Pressure Switch	15	1.5	11	SS
Oil Pressure Switch Terminal Bolt	2.0	0.20	18 in·lb	HG
Water Pump Cover Bolts	11	1.1	97 in·lb	
Water Pump Impeller Bolt	9.8	1.0	87 in·lb	
Engine Removal/Installation				
Adjusting Collar Lock Bolt	34	3.5	25	S
Adjusting Collar Locknut	49	5.0	36	S
Engine Ground Cable Terminal Bolt	9.8	1.0	87 in·lb	
Front Engine Mounting Bolts	44	4.5	32	S
Lower Engine Mounting Nut	44	4.5	32	S
Middle Engine Mounting Nut	44	4.5	32	S
Rear Engine Bracket Bolts	25	2.5	18	S
Subframe Bolts	25	2.5	18	S
Upper Engine Bracket Bolts	44	4.5	32	S
Crankshaft/Transmission				
Breather Plate Bolts (M6)	9.8	1.0	87 in·lb	L
Breather Plate Bolts (M5)	5.9	0.60	52 in·lb	L
Connecting Rod Big End Nuts	see the text	←	←	MO
Crankcase Bolts (M9)	42	4.3	31	MO, S
Crankcase Bolts (M8)	27	2.8	20	S
Crankcase Bolts (M7)	20	2.0	15	S
Crankcase Bolts (M6)	12	1.2	106 in·lb	S
Front Footpeg Bracket Bolts	25	2.5	18	
Gear Positioning Lever Bolt	12	1.2	106 in·lb	
Neutral Switch	15	1.5	11	
Oil Jet Nozzle Bolts	6.9	0.70	61 in·lb	L
Oil Passage Plugs	20	2.0	15	L
Oil Pipe Holder Bolts	13	1.3	115 in·lb	L
Shift Drum Bearing Holder Bolt	13	1.3	115 in·lb	L
Shift Drum Bearing Holder Screw	5.9	0.60	52 in·lb	L
Shift Drum Cam Holder Bolt	12	1.2	106 in·lb	L

Torque and Locking Agent

Fastener	Torque			Remarks
	N·m	kgf·m	ft·lb	
Shift Lever Bolt	6.9	0.70	61 in·lb	
Shift Pedal Mounting Bolt	34	3.5	25	L
Shift Shaft Return Spring Pin	29	3.0	21	L
Starter Motor Clutch Bolts	12	1.2	106 in·lb	L
Tie-Rod Locknuts	6.9	0.70	61 in·lb	
Wheels/Tires				
Front Axle	127	13.0	93.7	
Front Axle Clamp Bolt	20	2.0	15	
Rear Axle Nut	108	11.0	79.7	
Final Drive				
Engine Sprocket Cover Bolts	9.8	1.0	87 in·lb	
Engine Sprocket Cover Plate Bolts	9.8	1.0	87 in·lb	
Engine Sprocket Nut	125	12.7	92.2	MO
Rear Axle Nut	108	11.0	79.7	
Rear Sprocket Nuts	59	6.0	44	R
Brakes				
Bleed Valves	7.8	0.8	69 in·lb	
Brake Hose Banjo Bolts	25	2.5	18	
Brake Lever Pivot Bolt	1.0	0.1	9 in·lb	Si
Brake Lever Pivot Bolt Locknut	5.9	0.6	52 in·lb	
Brake Pedal Bolt	34	3.5	25	L
Brake Pipe Joint Nuts (ABS Equipped Models)	18	1.8	13	
Front Brake Disc Mounting Bolts	27	2.8	20	L
Front Brake Light Switch Screw	1.2	0.12	11 in·lb	
Front Brake Pad Pins	17.2	1.8	13	
Front Brake Reservoir Bolt	7.8	0.8	69 in·lb	L
Front Brake Reservoir Screw	1.2	0.12	11 in·lb	L
Front Caliper Assembly Bolts	27	2.8	20	
Front Caliper Mounting Bolts	34	3.5	25	
Front Master Cylinder Bleed Valve	7.8	0.8	69 in·lb	
Front Master Cylinder Clamp Bolts	11	1.1	97 in·lb	S
Front Master Cylinder Reservoir Cap Screws	1.5	0.15	13 in·lb	
Rear Brake Disc Mounting Bolts	27	2.8	20	L
Rear Brake Pad Pin	17.2	1.8	13	
Rear Brake Pad Pin Plug	2.5	0.25	22 in·lb	
Rear Caliper Mounting Bolt	22	2.2	16	
Rear Caliper Pin Bolt	27	2.8	20	Si
Rear Master Cylinder Mounting Bolts	25	2.5	18	
Rear Master Cylinder Push Rod Locknut	17.2	1.8	13	
Suspension				
Front Axle Clamp Bolt	20	2.0	15	
Front Fork Bottom Allen Bolts	20	2.0	15	L
Front Fork Top Plugs	34	3.5	25	

Torque and Locking Agent

Fastener	Torque			Remarks
	N·m	kgf·m	ft·lb	
Lower Front Fork Clamp Bolt (Middle)	17.5	1.8	13	
Lower Front Fork Clamp Bolts (Upper, Lower)	25	2.5	18	AL
Piston Rod Nuts	20	2.0	15	
Rear Shock Absorber Nut (Lower)	34	3.5	25	R
Rear Shock Absorber Nut (Upper)	34	3.5	25	R
Swingarm Pivot Shaft	9.8	1.0	87 in·lb	
Swingarm Pivot Shaft Locknut	98	10	72	
Swingarm Pivot Shaft Nut	108	11.0	79.7	
Tie-Rod Nuts	59	6.0	44	R
Uni-Trak Rocker Arm Nut	34	3.5	25	R
Upper Front Fork Clamp Bolts	20	2.0	15	
Steering				
Handlebar Holder Bolts	25	2.5	18	S
Handlebar Lower Holder Nuts	34	3.5	25	R
Lower Front Fork Clamp Bolt (Middle)	17.5	1.8	13	
Lower Front Fork Clamp Bolts (Upper, Lower)	25	2.5	18	AL
Steering Stem Head Bolt	108	11.0	79.7	
Steering Stem Nut	27	2.8	20	
Switch Housing Screws	3.5	0.36	31 in·lb	
Upper Front Fork Clamp Bolts	20	2.0	15	
Rear View Mirror (Lower Hexagonal Area)	30	3.1	22	
Rear View Mirror (Upper Hexagonal Area)	18	1.8	13	
Frame				
Front Fender Bolts	3.9	0.40	35 in·lb	
Front Footpeg Bracket Bolts	25	2.5	18	
Rear View Mirror (Lower Hexagonal Area)	30	3.1	22	
Rear View Mirror (Upper Hexagonal Area)	18	1.8	13	
Rear Footpeg Bracket Bolts	25	2.5	18	
Sidestand Bolt	44	4.5	32	
Sidestand Switch Bolt	8.8	0.90	78 in·lb	L
Electrical System				
Alternator Cover Bolts	11	1.1	97 in·lb	
Alternator Lead Holding Plate Bolt	12	1.2	106 in·lb	L
Alternator Rotor Bolt	155	15.8	114	S
Camshaft Position Sensor Bolt	12	1.2	106 in·lb	
Crankshaft Sensor Bolts	5.9	0.60	52 in·lb	
Crankshaft Sensor Cover Bolts	11	1.1	97 in·lb	
Engine Ground Cable Terminal Bolt	9.8	1.0	87 in·lb	
Front Brake Light Switch Screw	1.2	0.12	11 in·lb	
Fuel Level Sensor Bolts	6.9	0.70	61 in·lb	L
License Plate Light Cover Mounting Screws	0.9	0.09	8 in·lb	
License Plate Light Mounting Screws	1.2	0.12	11 in·lb	
Meter Mounting Screws	1.2	0.12	11 in·lb	

Torque and Locking Agent

Fastener	Torque			Remarks
	N·m	kgf·m	ft·lb	
Neutral Switch	15	1.5	11	
Oil Pressure Switch	15	1.5	11	SS
Oil Pressure Switch Terminal Bolt	2.0	0.20	18 in·lb	HG
Oxygen Sensor	44.1	4.50	32.5	
Regulator/Rectifier Bolts	6.9	0.70	61 in·lb	
Regulator/Rectifier Bracket Bolts	6.9	0.70	61 in·lb	L
Sidestand Switch Bolt	8.8	0.90	78 in·lb	L
Spark Plugs	13	1.3	115 in·lb	
Speed Sensor Bolt	12	1.2	106 in·lb	
Starter Motor Mounting Bolts	11	1.1	97 in·lb	
Starter Relay Cable Terminal Bolts	3.9	0.40	35 in·lb	
Stator Coil Bolts	12	1.2	106 in·lb	L
Switch Housing Screws	3.5	0.36	31 in·lb	
Tail/Brake Light Mounting Screws	1.2	0.12	11 in·lb	
Timing Rotor Bolt	39	4.0	29	
Vehicle-down Sensor Bolts	6.0	0.61	53 in·lb	
Water Temperature Sensor	25	2.5	18	

The table below, relating tightening torque to thread diameter, lists the basic torque for the bolts and nuts. Use this table for only the bolts and nuts which do not require a specific torque value. All of the values are for use with dry solvent-cleaned threads.

Basic Torque for General Fasteners

Threads Diameter (mm)	Torque		
	N·m	kgf·m	ft·lb
5	3.4 ~ 4.9	0.35 ~ 0.50	30 ~ 43 in·lb
6	5.9 ~ 7.8	0.60 ~ 0.80	52 ~ 69 in·lb
8	14 ~ 19	1.4 ~ 1.9	10.0 ~ 13.5
10	25 ~ 34	2.6 ~ 3.5	19.0 ~ 25
12	44 ~ 61	4.5 ~ 6.2	33 ~ 45
14	73 ~ 98	7.4 ~ 10.0	54 ~ 72
16	115 ~ 155	11.5 ~ 16.0	83 ~ 115
18	165 ~ 225	17.0 ~ 23.0	125 ~ 165
20	225 ~ 325	23.0 ~ 33.0	165 ~ 240

Specifications

Item	Standard	Service Limit
Fuel System (DFI)		
Throttle Grip Free Play	2 ~ 3 mm (0.08 ~ 0.12 in.)	– – –
Idle Speed	1 100 ±50 r/min (rpm)	– – –
Bypass Screws (Turn Out)	2 1/2 (for reference)	– – –
Throttle Body Vacuum	35.3 ±1.3 kPa (265 ±10 mmHg) at idle speed	– – –
Air Cleaner Element	Paper filter	– – –
Cooling System		
Coolant:		
Type (Recommended)	Permanent type antifreeze	– – –
Color	Green	– – –
Mixed Ratio	Soft water 50%, Coolant 50%	– – –
Freezing Point	–35°C (–31°F)	– – –
Total Amount	2.9 L (3.1 US qt)	– – –
Engine Top End		
Valve Clearance:		
Exhaust	0.22 ~ 0.31 mm (0.0087 ~ 0.0122 in.)	– – –
Intake	0.15 ~ 0.24 mm (0.0059 ~ 0.0094 in.)	– – –
Clutch		
Clutch Lever Free Play	2 ~ 3 mm (0.08 ~ 0.12 in.)	– – –
Engine Lubrication System		
Engine Oil:		
Type	API SG, SH, SJ, SL or SM with JASO MA, MA1 or MA2	– – –
Viscosity	SAE 10W-40	– – –
Capacity	3.1 L (3.3 US qt) (when filter is not removed)	– – –
	3.3 L (3.5 US qt) (when filter is removed)	– – –
	3.8 L (4.0 US qt) (when engine is completely dry)	– – –
Level	Between upper and lower level lines (Wait 2 ~ 3 minutes after idling or running)	– – –
Wheels/Tires		
Tread Depth:		
Front	4.0 mm (0.16 in.)	1 mm (0.04 in.), (AT, CH, DE) 1.6 mm (0.06 in.)
Rear	5.0 mm (0.20 in.)	Up to 130 km/h (80 mph): 2 mm (0.08 in.), Over 130 km/h (80 mph): 3 mm (0.12 in.)

Specifications

Item	Standard	Service Limit
Air Pressure (when Cold):		
Front	Up to 180 kg (397 lb) load: 250 kPa (2.5 kgf/cm², 36 psi)	– – –
Rear	Up to 180 kg (397 lb) load: 290 kPa (2.9 kgf/cm², 42 psi)	– – –
Final Drive		
Drive Chain Slack	30 ~ 40 mm (1.2 ~ 1.6 in.)	– – –
Drive Chain Wear (20-link Length)	317.5 ~ 318.2 mm (12.50 ~ 12.53 in.)	323 mm (12.7 in.)
Standard Chain:		
Make	ENUMA	– – –
Type:		
ZR750NB/PB Early Models	EK520MVXL1	– – –
ZR750NB/PB Late Models ~	EK520MVXL2	– – –
Link	112 Links	– – –
Brakes		
Brake Fluid:		
Grade	DOT4	– – –
Brake Pad Lining Thickness:		
Front	4.0 mm (0.16 in.)	1 mm (0.04 in.)
Rear	5.0 mm (0.20 in.)	1 mm (0.04 in.)
Brake Light Timing:		
Front	Pulled ON	– – –
Rear	ON after about 10 mm (0.39 in.) of pedal travel	– – –
Electrical System		
Spark Plug:		
Type	NGK CR9EK	– – –
Gap	0.7 ~ 0.8 mm (0.028 ~ 0.031 in.)	– – –

Special Tools

Inside Circlip Pliers:
57001-143

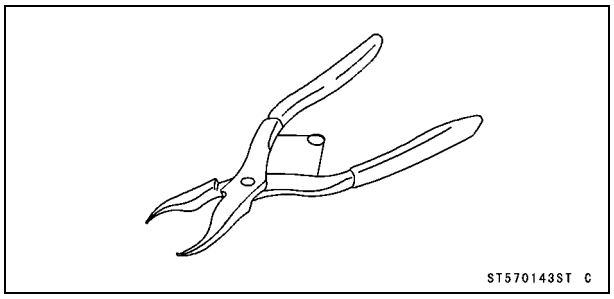

Steering Stem Nut Wrench:
57001-1100

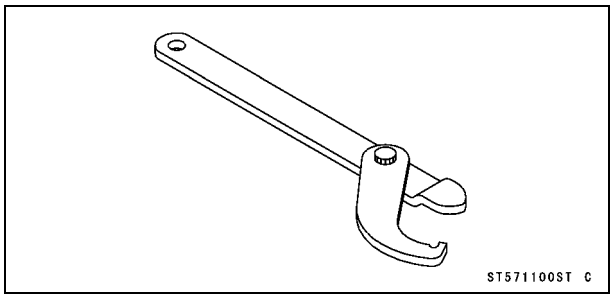

Jack:
57001-1238

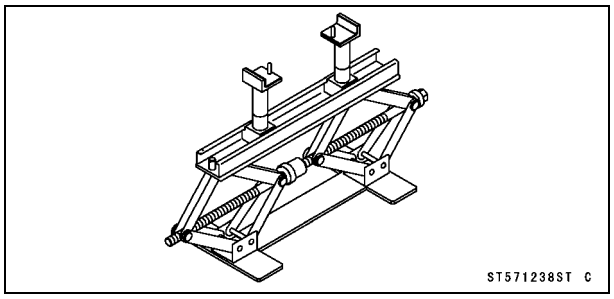

Oil Filter Wrench:
57001-1249

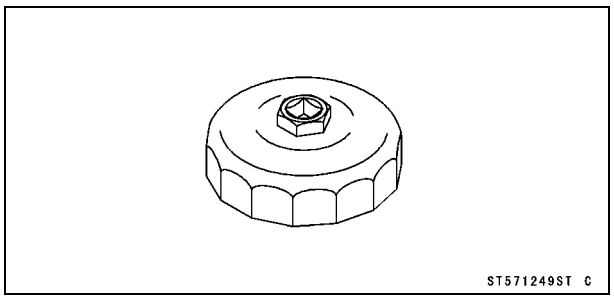

Vacuum Gauge:
57001-1369

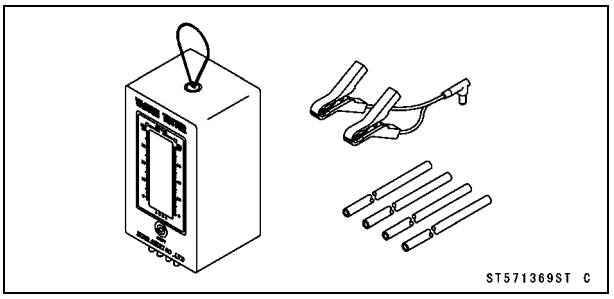

Throttle Sensor Setting Adapter:
57001-1538

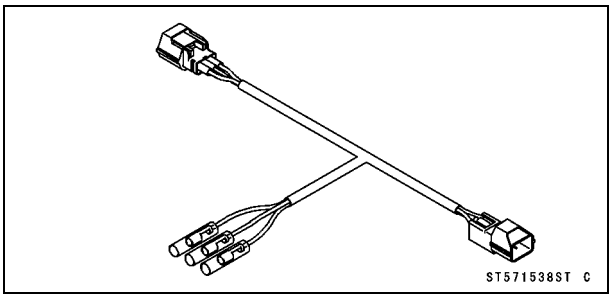

Extension Tube:
57001-1578

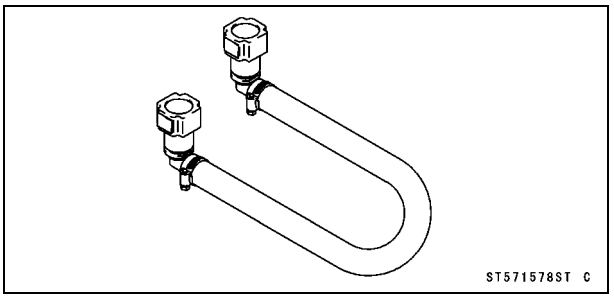

Jack Attachment:
57001-1608

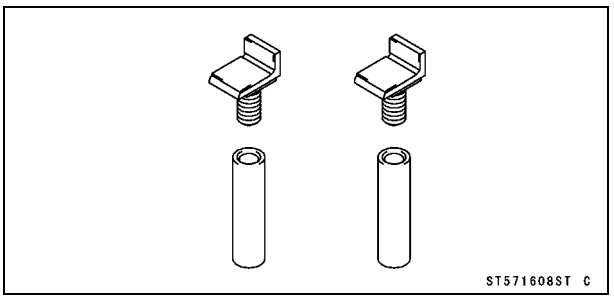

Fuel System (DFI)

Air Cleaner Element Cleaning

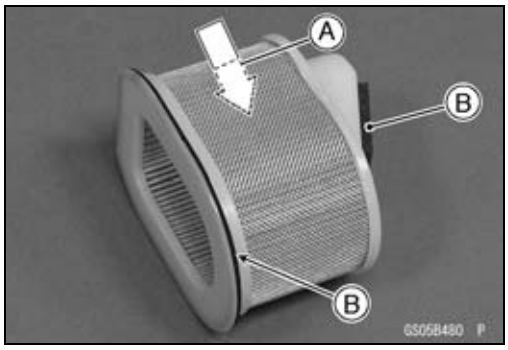

NOTE

○*In dusty areas, the element should be cleaned more frequently than the recommended interval.*
○*After riding through rain or on muddily roads, the element should be cleaned immediately.*

⚠ WARNING

If dirt or dust is allowed to pass through into the throttle assy, the throttle may become stuck, possibly causing accident. Replace the air cleaner element according to the maintenance chart.

NOTICE

If dirt gets through into the engine, excessive engine wear and possibly engine damage will occur.

- Remove the element (see Air Cleaner Element Replacement).
- Clean the element by tapping it lightly to loosen dust.
- Blow away the remaining dust by applying compressed air [A] from the outside to the inside (from the clean side to the dirty side).
- Visually inspect the element for no tears or no breaks and inspect the sponge gaskets [B] also.

★If the element or gasket has any tears or breaks, replace the element.

Throttle Control System Inspection

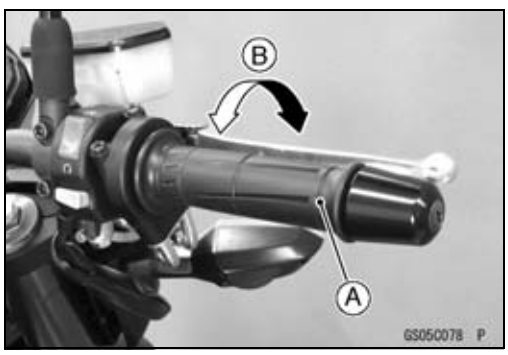

- Check that the throttle grip [A] moves smoothly from full open to close, and the throttle closes quickly and completely by the return spring in all steering positions.

★If the throttle grip does not return properly, check the throttle cable routing, grip free play, and cable damage. Then lubricate the throttle cable.

- Check the throttle grip free play [B].

Throttle Grip Free Play
Standard: 2 ~ 3 mm (0.08 ~ 0.12 in.)

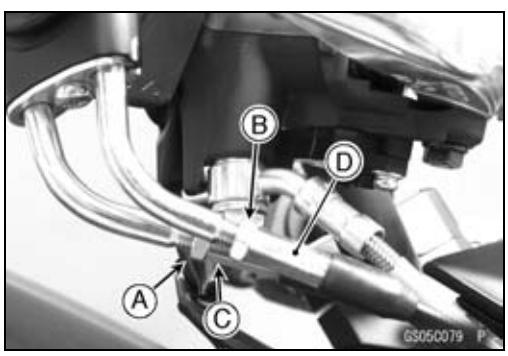

★If the free play is incorrect, adjust the throttle cable as follows.

- Loosen the locknuts [A] [B].
- Screw both throttle cable adjusters [C] [D] to give the throttle grip plenty of play.
- Turn the decelerator cable adjuster [C] until 2 ~ 3 mm (0.08 ~ 0.12 in.) of throttle grip play is obtained.
- Tighten the locknut [A].
- Turn the accelerator cable adjuster [D] until 2 ~ 3 mm (0.08 ~ 0.12 in.) of throttle grip play is obtained.
- Tighten the locknut [B].

★If the free play can not be adjusted with the adjusters, replace the cable.

Periodic Maintenance Procedures

Engine Vacuum Synchronization Inspection

NOTE

○*These procedures are explained on the assumption that the intake and exhaust systems of the engine are in good condition.*

- Situate the motorcycle so that it is vertical.
- Remove the fuel tank (see Fuel Tank Removal in the Fuel System (DFI) chapter).
- Pull off the rubber caps [A] from the fittings of each throttle body.
  Upside View [B]

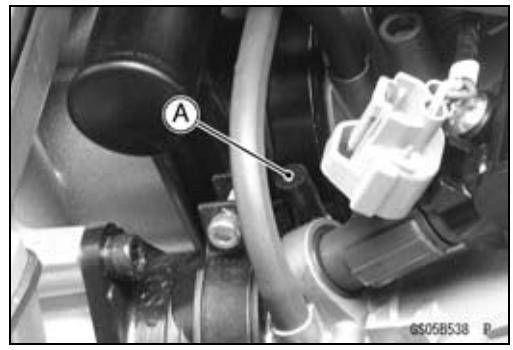

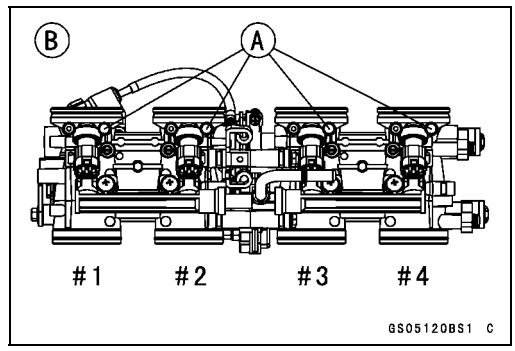

- Pull off the air switching valve hose [A] from the air cleaner housing.
- Plug the air switching valve hose end and air cleaner housing fitting.

- Connect a vacuum gauge (special tool) and hoses [A] to the fittings on the throttle body.

  Special Tool - Vacuum Gauge: 57001-1369
- Connect a highly accurate tachometer [B] to one of the stick coil primary leads.

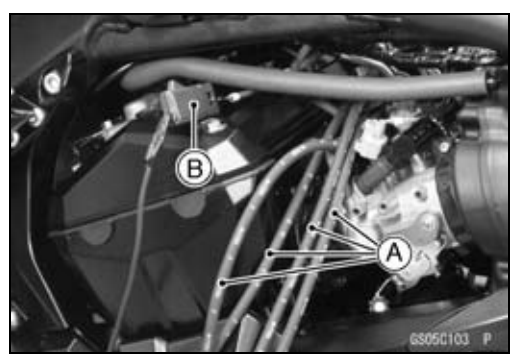

- Remove the fuel outlet hose (see Fuel Hose Replacement).
- Connect the following parts temporary.
  Fuel Pump Lead Connector [A]
  Fuel Level Sensor Lead Connector [B]
  Extension Tube [C]

  Special Tool - Extension Tube: 57001-1578

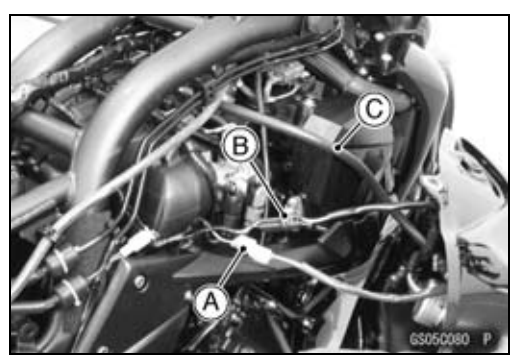

Periodic Maintenance Procedures

- Start the engine and warm it up thoroughly.
- Check the idle speed, using a highly accurate tachometer [A].

Idle Speed
Standard: 1 100 ±50 r/min (rpm)

★If the idle speed is out of the specified range, adjust it with the adjusting screw (see Idle Speed Adjustment).

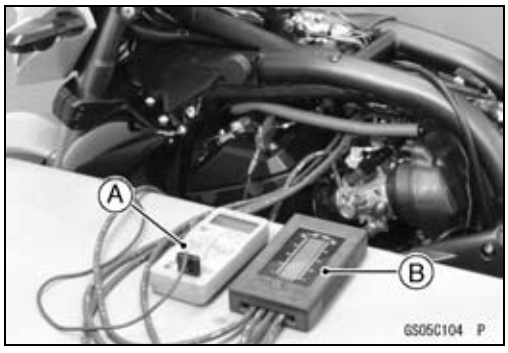

NOTICE

Do not measure the idle speed by the tachometer of the meter unit.

- While idling the engine, inspect the throttle body vacuum, using the vacuum gauge [B].

Throttle Body Vacuum
Standard: 35.3 ±1.3 kPa (265 ±10 mmHg) at idle speed

★If any vacuum is not within specifications, first synchronize the balance of the left (#1, #2 throttle valves) and right (#3, #4 throttle valves) assemblies.

Example:
#1: 260 mmHg
#2: 290 mmHg
#3: 250 mmHg
#4: 270 mmHg

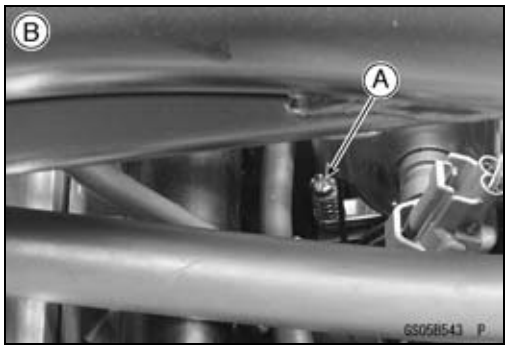

- With the engine at the correct idle speed, equalize higher vacuum of #1 or #2 (for example 290 mmHg) to higher vacuum of #3 or #4 (for example 270 mmHg) by turning the center adjusting screw [A].
  Upside View [B]

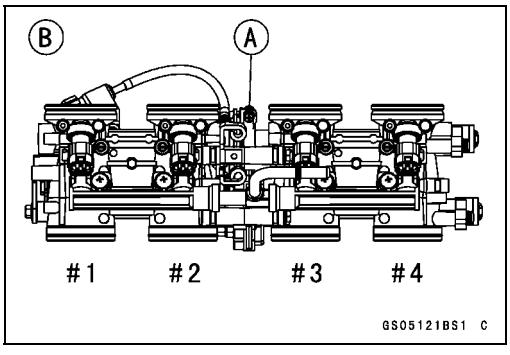

NOTE

○*After adjustment, the final vacuum measurement between the highest throttle valves may not be 290 mmHg (for example). The goal is to have the highest two vacuums between the left (#1 and #2) and right (#3 and #4) banks be the same.*

- Open and close the throttle after each measurement, and adjust the idle speed as necessary.
- Once the throttle valves have been synchronized, inspect output voltage of the main throttle sensor to ensure proper operation (procedure is explained at the end of this section).

Periodic Maintenance Procedures

★If any one vacuum measurement is out of the specified range after left (#1, #2) and right (#2, #3) synchronization, adjust the bypass screws [A].
Upside View [B]

- Adjust the lower vacuum between #1 and #2 to the higher vacuum of #1 and #2.
- Adjust the lower vacuum between #3 and #4 to the higher vacuum of #3 and #4.
- Open and close the throttle valves after each measurement, and adjust the idle speed as necessary.
- Check the vacuums as before.

★If all vacuums are within the specification range, finish the engine vacuum synchronization.

★If any vacuum can not be adjusted within the specification, remove the bypass screws #1 ~ #4 and clean them.

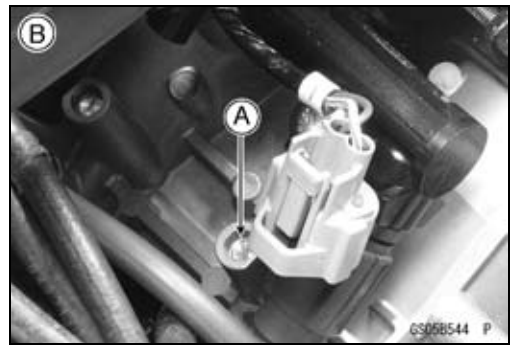

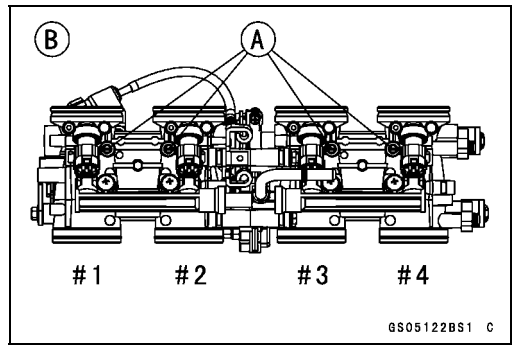

- Turn in the bypass screw [A] with counting the number of turns until it seals fully but not tightly. Record the number of turns.

Torque - Bypass Screws: 0.2 N·m (0.02 kgf·m, 1.8 in·lb)

NOTICE
Do not over tighten them. They could be damaged, requiring replacement.

- Remove:
  Bypass Screw
  Spring [B]
  Washer [C]
  O-ring [D]
- Check the bypass screw and its hole for carbon deposits.

★If any carbons accumulate, wipe the carbons off from the bypass screw and the hole, using a cotton pad penetrated with a high-flash point solvent.

- Replace the O-ring with a new one.
- Check the tapered portion [E] of the bypass screw for wear or damage.

★If the bypass screw is worn or damaged, replace it.

- Turn in the bypass screw until it seats fully but not tightly.

Torque - Bypass Screws: 0.2 N·m (0.02 kgf·m, 1.8 in·lb)

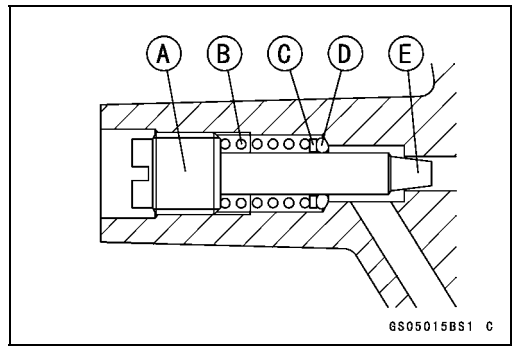

- Back out the same number of turns counted when first turned in. This is to set the screw to its original position.

NOTE

○*A throttle body has different "turns out" of the bypass screw for each individual unit. On setting the bypass screw, use the "turns out" determined during disassembly.*

- Repeat the same procedure for other bypass screws.
- Repeat the synchronization.

★If the vacuums are correct, check the output voltage of the main throttle sensor (see Main Throttle Sensor Output Voltage Inspection in the Fuel System (DFI) chapter).

Special Tool - Throttle Sensor Setting Adapter: 57001 -1538

Main Throttle Sensor Output Voltage
Connections to Adapter:
Digital Meter (+) → R (sensor Y/W) lead
Digital Meter (–) → W (sensor BR/BK) lead

Standard: DC 0.985 ~ 1.015 V at idle throttle opening

★If the output voltage is out of the standard, check the input voltage of the main throttle sensor (see Main Throttle Sensor Input Voltage Inspection in the Fuel System (DFI) chapter).

- Remove the vacuum gauge hoses and install the rubber caps on the original position.

Idle Speed Inspection

- Start the engine and warm it up thoroughly.
- With the engine idling, turn the handlebar to both sides [A].

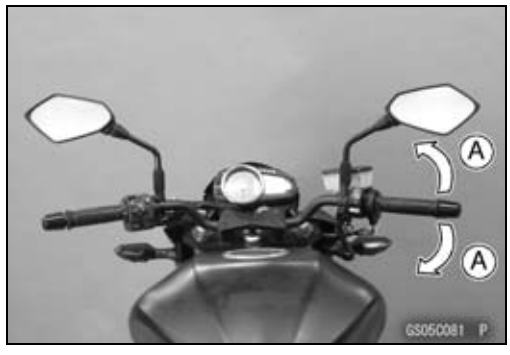

★If handlebar movement changes the idle speed, the throttle cables may be improperly adjusted or incorrectly routed or damaged. Be sure to correct any of these conditions before riding (see Throttle Control System Inspection and Cable, Wire, and Hose Routing section in the Appendix chapter).

⚠ WARNING

Operation with improperly adjusted, incorrectly routed or damaged cables could result in an unsafe riding condition. Follow the service manual to be make sure to correct any of these conditions.

- Check the idle speed.

Idle Speed
Standard: 1 100 ±50 r/min (rpm)

★If the idle speed is out of the specified range, adjust it.

Periodic Maintenance Procedures

Idle Speed Adjustment

- Start the engine and warm it up thoroughly.
- Turn the adjusting screw [A] until the idle speed is correct.

○Open and close the throttle a few times to make sure that the idle speed is within the specified range. Readjust if necessary.

Fuel Hose Inspection (fuel leak, damage, installation condition)

○If the motorcycle is not properly handled, the high pressure inside the fuel line can cause fuel to leak [A] or the hose to burst. Remove the fuel tank (see Fuel Tank Removal in the Fuel System (DFI) chapter) and check the fuel hoses.

★Replace the hose if any fraying, cracks [B] or bulges [C] are noticed.

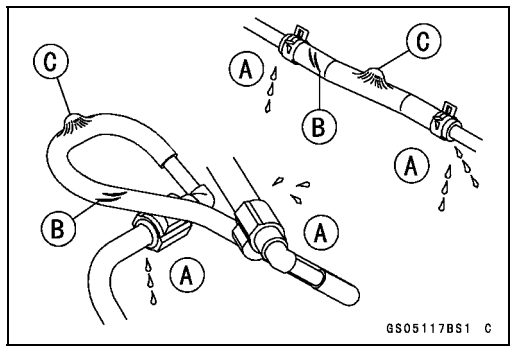

- Check that the hoses are routed according to Cable, Wire, and Hose Routing section in the Appendix chapter.

★Replace the hose if it has been sharply bent or kinked.

Hose Joints [A]
Fuel Outlet Hose [B]
Fuel Intake Hose [C]
Front [D]

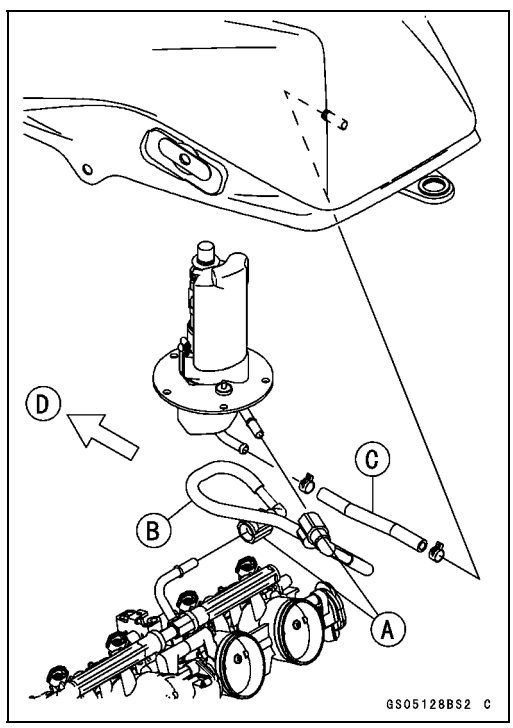

Periodic Maintenance Procedures

● Check that the outlet hose joints are securely connected.
○Push and pull [A] the hose joint [B] back and forth more than two times, and make sure it is locked and does not come off.
Fuel Pump Side [C]
Throttle Body Assy Side [D]

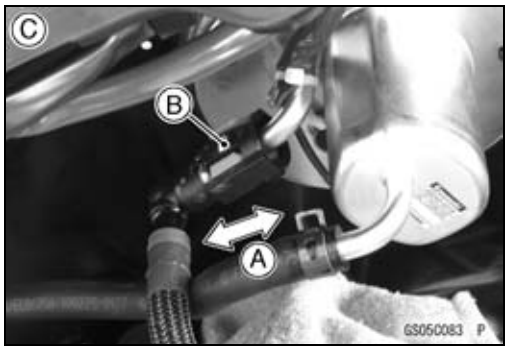

⚠ WARNING

Leaking fuel can cause a fire or explosion resulting in serious burns. Make sure the hose joint is installed correctly on the delivery pipe.

★If it comes off, reinstall the hose joint.

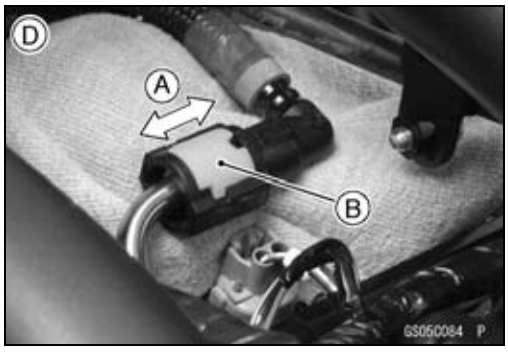

● Check that the intake hose [A] is onto the pipe fully and the clamps [B] are installed beyond the raised rib [C].
1 ~ 2 mm (0.039 ~ 0.079 in.) [D]

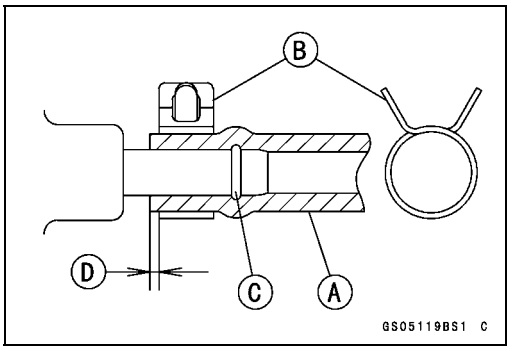

Periodic Maintenance Procedures

Cooling System

Coolant Level Inspection

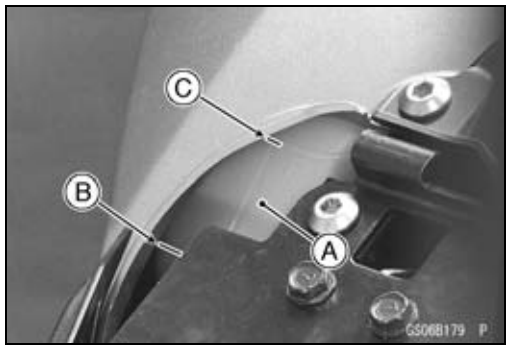

NOTE

○*Check the level when the engine is cold (room or ambient temperature).*

- Remove the front seat (see Front Seat Removal in the Frame chapter).
- Check the coolant level in the reserve tank [A] with the motorcycle held perpendicular (Do not use the sidestand.).

★If the coolant level is lower than the “L” level line [B], unscrew the reserve tank cap and add coolant to the “F” level line [C].

“L”: low
“F”: full

NOTICE

For refilling, add the specified mixture of coolant and soft water. Adding water alone dilutes the coolant and degrades its anticorrosion properties. The diluted coolant can attack the aluminum engine parts. In an emergency, soft water alone can be added. But the diluted coolant must be returned to the correct mixture ratio within a few days.
If coolant must be added often or the reservoir tank has run completely dry, there is probably leakage in the cooling system. Check the system for leaks.
Coolant ruins painted surfaces. Immediately wash away any coolant that spills on the frame, engine, wheels or other painted parts.

Radiator Hose and Pipe Inspection (coolant leak, damage, installation condition)

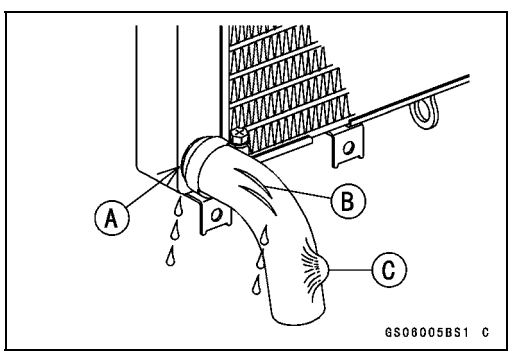

○The high pressure inside the radiator hose can cause coolant to leak [A] or the hose to burst if the line is not properly maintained.

- Visually inspect the hoses for signs of deterioration. Squeeze the hoses. A hose should not be hard and brittle, nor should it be soft or swollen.

★Replace the hose if any fraying, cracks [B] or bulges [C] are noticed.

- Check that the hoses are securely connected and clamps are tightened correctly.

Torque - Radiator (Water) Hose Clamp Screws: 3.0 N·m (0.31 kgf·m, 27 in·lb)

Engine Top End

Valve Clearance Inspection

NOTE

○*Valve clearance must be checked and adjusted when the engine is cold (room temperature).*

- Remove:
  Crankshaft Sensor Cover (see Crankshaft Sensor Removal in the Electrical System chapter)
  Cylinder Head Cover (see Cylinder Head Cover Removal in the Engine Top End chapter)

- Position the crankshaft at 1,4 piston TDC.
  TDC Mark [A] for #1, 4 Pistons
  Timing Mark [B] (Crankcase Halves Mating Surface)

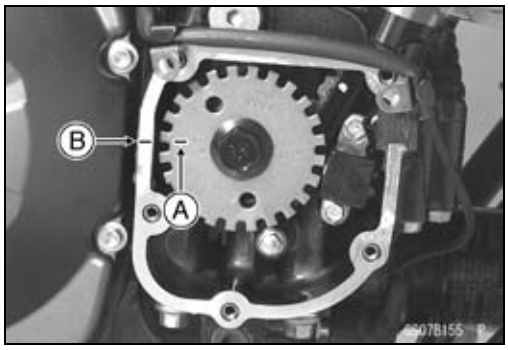

- Using the thickness gauge [A], measure the valve clearance between the cam and the valve lifter.

Valve Clearance
Standard:

Exhaust	**0.22 ~ 0.31 mm (0.0087 ~ 0.0122 in.)**
Intake	**0.15 ~ 0.24 mm (0.0059 ~ 0.0094 in.)**

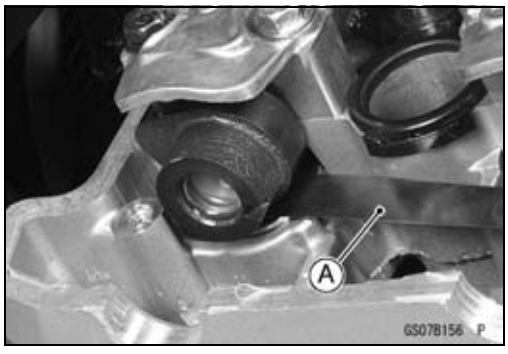

NOTE

○*Thickness gauge is horizontally inserted on the valve lifter.*

Appropriateness [A]
Inadequacy [B]
Thickness Gauge [C]
Horizontally Inserts [D]
Cam [E]
Valve Lifter [F]
Hits the Valve Lifter Ahead [G]

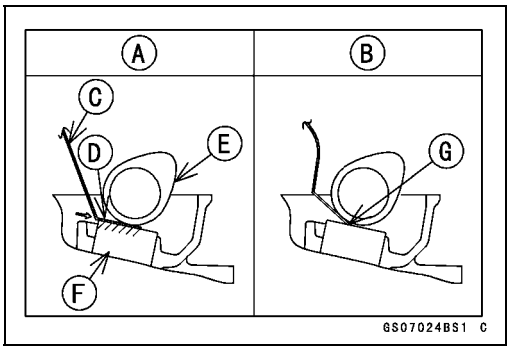

Periodic Maintenance Procedures

○**When positioning #4 piston TDC at the end of the compression stroke:**
Intake Valve Clearance of #2 and #4 Cylinders
Exhaust Valve Clearance of #3 and #4 Cylinders
Measuring Valve [A]

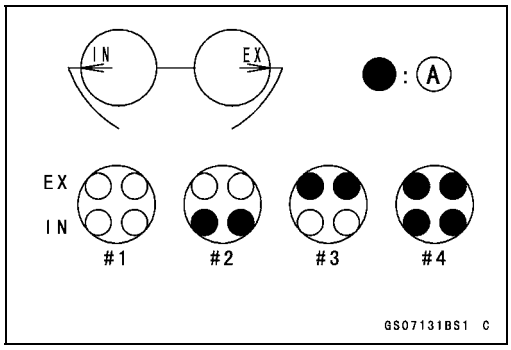

○**When positioning #1 piston TDC at the end of the compression stroke:**
Intake Valve Clearance of #1 and #3 Cylinders
Exhaust Valve Clearance of #1 and #2 Cylinders
Measuring Valve [A]

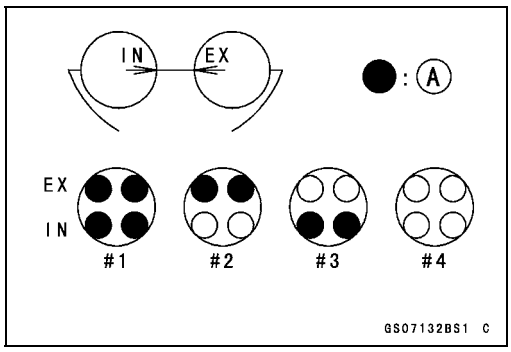

★If the valve clearance is not within the specified range, first record the clearance, and then adjust it.

Valve Clearance Adjustment

- To change the valve clearance, remove the camshaft chain tensioner, camshafts and valve lifters. Replace the shim with one of a different thickness.

NOTE

○*Mark and record the locations of the valve lifters and shims so that they can be reinstalled in their original positions.*

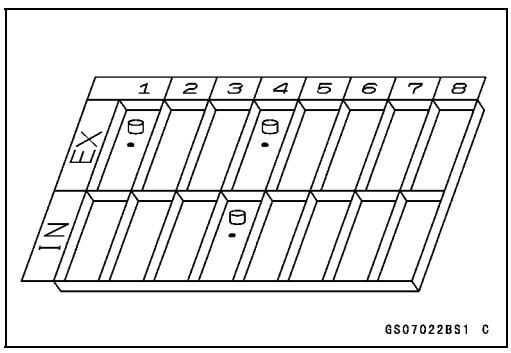

○Besides the standard shims in the valve clearance adjustment charts, the following additional shims maybe used.

Adjustment Shims

Part Number	Thickness
92180-0276	3.225 mm
92180-0277	3.275 mm
92180-0278	3.325 mm

- Clean the shim to remove any dust or oil.
- Measure the thickness of the removed shim [A].

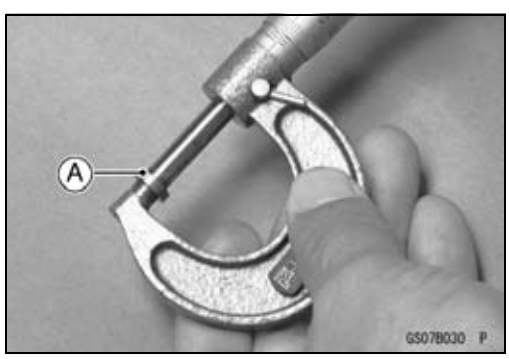

VALVE CLEARANCE ADJUSTMENT CHART INTAKE VALVE

	PRESENT SHIM									Example											
PART No. (92180-)	1014	1016	1018	1020	1022	1024	1026	1028	1030	1032	1034	1036	1038	1040	1042	1044	1046	1048	1050	1052	1054
MARK	50	55	60	65	70	75	80	85	90	95	00	05	10	15	20	25	30	35	40	45	50
THICKNESS (mm)	2.50	2.55	2.60	2.65	2.70	2.75	2.80	2.85	2.90	2.95	3.00	3.05	3.10	3.15	3.20	3.25	3.30	3.35	3.40	3.45	3.50
VALVE CLEARANCE MEASUREMENT (Example)																					
0.00~0.02	-	-	-	-	2.50	2.55	2.60	2.65	2.70	2.75	2.80	2.85	2.90	2.95	3.00	3.05	3.10	3.15	3.20	3.25	3.30
0.03~0.07	-	-	-	2.50	2.55	2.60	2.65	2.70	2.75	2.80	2.85	2.90	2.95	3.00	3.05	3.10	3.15	3.20	3.25	3.30	3.35
0.08~0.12	-	-	2.50	2.55	2.60	2.65	2.70	2.75	2.80	2.85	2.90	2.95	3.00	3.05	3.10	3.15	3.20	3.25	3.30	3.35	3.40
0.13~0.14	-	2.50	2.55	2.60	2.65	2.70	2.75	2.80	2.85	2.90	2.95	3.00	3.05	3.10	3.15	3.20	3.25	3.30	3.35	3.40	3.45
0.15~0.24	SPECIFIED CLEARANCE/NO CHANGE REQUIRED																				
0.25~0.27	2.55	2.60	2.65	2.70	2.75	2.80	2.85	2.90	2.95	3.00	3.05	3.10	3.15	3.20	3.25	3.30	3.35	3.40	3.45	3.50	
0.28~0.32	2.60	2.65	2.70	2.75	2.80	2.85	2.90	2.95	3.00	3.05	3.10	3.15	3.20	3.25	3.30	3.35	3.40	3.45	3.50		
0.33~0.37	2.65	2.70	2.75	2.80	2.85	2.90	2.95	3.00	3.05	3.10	3.15	3.20	3.25	3.30	3.35	3.40	3.45	3.50			
0.38~0.42	2.70	2.75	2.80	2.85	2.90	2.95	3.00	3.05	3.10	3.15	3.20	3.25	3.30	3.35	3.40	3.45	3.50				
0.43~0.47	2.75	2.80	2.85	2.90	2.95	3.00	3.05	3.10	3.15	3.20	3.25	3.30	3.35	3.40	3.45	3.50					
0.48~0.52	2.80	2.85	2.90	2.95	3.00	3.05	3.10	3.15	3.20	3.25	3.30	3.35	3.40	3.45	3.50						
0.53~0.57	2.85	2.90	2.95	3.00	3.05	3.10	3.15	3.20	3.25	3.30	3.35	3.40	3.45	3.50							
0.58~0.62	2.90	2.95	3.00	3.05	3.10	3.15	3.20	3.25	3.30	3.35	3.40	3.45	3.50								
0.63~0.67	2.95	3.00	3.05	3.10	3.15	3.20	3.25	3.30	3.35	3.40	3.45	3.50									
0.68~0.72	3.00	3.05	3.10	3.15	3.20	3.25	3.30	3.35	3.40	3.45	3.50										
0.73~0.77	3.05	3.10	3.15	3.20	3.25	3.30	3.35	3.40	3.45	3.50											
0.78~0.82	3.10	3.15	3.20	3.25	3.30	3.35	3.40	3.45	3.50												
0.83~0.87	3.15	3.20	3.25	3.30	3.35	3.40	3.45	3.50													
0.88~0.92	3.20	3.25	3.30	3.35	3.40	3.45	3.50														
0.93~0.97	3.25	3.30	3.35	3.40	3.45	3.50															
0.98~1.02	3.30	3.35	3.40	3.45	3.50																
1.03~1.07	3.35	3.40	3.45	3.50																	
1.08~1.12	3.40	3.45	3.50																		
1.13~1.17	3.45	3.50																			
1.18~1.22	3.50																				

INSTALL THE SHIM OF THIS THICKNESS (mm)

GS07122BW3 C

1. Measure the clearance (when engine is cold).
2. Check present shim size.
3. Match clearance in vertical column with present shim size in horizontal column.
4. Install the shim specified where the lines intersect. This shim will give the proper clearance.

Example: Present shim is **2.95 mm**
Measured clearance is **0.45 mm**
Replace **2.95 mm** shim with **3.20 mm** shim.

5. Remeasure the valve clearance and readjust if necessary.

Periodic Maintenance Procedures

VALVE CLEARANCE ADJUSTMENT CHART EXHAUST VALVE

	PRESENT SHIM									Example											
PART No. (92180-)	1014	1016	1018	1020	1022	1024	1026	1028	1030	1032	1034	1036	1038	1040	1042	1044	1046	1048	1050	1052	1054
MARK	50	55	60	65	70	75	80	85	90	95	00	05	10	15	20	25	30	35	40	45	50
THICKNESS (mm)	2.50	2.55	2.60	2.65	2.70	2.75	2.80	2.85	2.90	2.95	3.00	3.05	3.10	3.15	3.20	3.25	3.30	3.35	3.40	3.45	3.50
VALVE CLEARANCE MEASUREMENT (Example)																					
0.00~0.04	-	-	-	-	-	2.50	2.55	2.60	2.65	2.70	2.75	2.80	2.85	2.90	2.95	3.00	3.05	3.10	3.15	3.20	3.25
0.05~0.09	-	-	-	-	2.50	2.55	2.60	2.65	2.70	2.75	2.80	2.85	2.90	2.95	3.00	3.05	3.10	3.15	3.20	3.25	3.30
0.10~0.14	-	-	-	2.50	2.55	2.60	2.65	2.70	2.75	2.80	2.85	2.90	2.95	3.00	3.05	3.10	3.15	3.20	3.25	3.30	3.35
0.15~0.19	-	-	2.50	2.55	2.60	2.65	2.70	2.75	2.80	2.85	2.90	2.95	3.00	3.05	3.10	3.15	3.20	3.25	3.30	3.35	3.40
0.20~0.21	-	2.50	2.55	2.60	2.65	2.70	2.75	2.80	2.85	2.90	2.95	3.00	3.05	3.10	3.15	3.20	3.25	3.30	3.35	3.40	3.45
0.22~0.31	SPECIFIED CLEARANCE/NO CHANGE REQUIRED																				
0.32~0.34	2.55	2.60	2.65	2.70	2.75	2.80	2.85	2.90	2.95	3.00	3.05	3.10	3.15	3.20	3.25	3.30	3.35	3.40	3.45	3.50	
0.35~0.39	2.60	2.65	2.70	2.75	2.80	2.85	2.90	2.95	3.00	3.05	3.10	3.15	3.20	3.25	3.30	3.35	3.40	3.45	3.50		
0.40~0.44	2.65	2.70	2.75	2.80	2.85	2.90	2.95	3.00	3.05	3.10	3.15	3.20	3.25	3.30	3.35	3.40	3.45	3.50			
0.45~0.49	2.70	2.75	2.80	2.85	2.90	2.95	3.00	3.05	3.10	3.15	3.20	3.25	3.30	3.35	3.40	3.45	3.50				
0.50~0.54	2.75	2.80	2.85	2.90	2.95	3.00	3.05	3.10	3.15	3.20	3.25	3.30	3.35	3.40	3.45	3.50					
0.55~0.59	2.80	2.85	2.90	2.95	3.00	3.05	3.10	3.15	3.20	3.25	3.30	3.35	3.40	3.45	3.50						
0.60~0.64	2.85	2.90	2.95	3.00	3.05	3.10	3.15	3.20	3.25	3.30	3.35	3.40	3.45	3.50							
0.65~0.69	2.90	2.95	3.00	3.05	3.10	3.15	3.20	3.25	3.30	3.35	3.40	3.45	3.50								
0.70~0.74	2.95	3.00	3.05	3.10	3.15	3.20	3.25	3.30	3.35	3.40	3.45	3.50									
0.75~0.79	3.00	3.05	3.10	3.15	3.20	3.25	3.30	3.35	3.40	3.45	3.50										
0.80~0.84	3.05	3.10	3.15	3.20	3.25	3.30	3.35	3.40	3.45	3.50											
0.85~0.89	3.10	3.15	3.20	3.25	3.30	3.35	3.40	3.45	3.50												
0.90~0.94	3.15	3.20	3.25	3.30	3.35	3.40	3.45	3.50													
0.95~0.99	3.20	3.25	3.30	3.35	3.40	3.45	3.50														
1.00~1.04	3.25	3.30	3.35	3.40	3.45	3.50															
1.05~1.09	3.30	3.35	3.40	3.45	3.50																
1.10~1.14	3.35	3.40	3.45	3.50																	
1.15~1.19	3.40	3.45	3.50																		
1.20~1.24	3.45	3.50																			
1.25~1.29	3.50																				

INSTALL THE SHIM OF THIS THICKNESS (mm)

GS07120BW3 C

1. Measure the clearance (when engine is cold).
2. Check present shim size.
3. Match clearance in vertical column with present shim size in horizontal column.
4. Install the shim specified where the lines intersect. This shim will give the proper clearance.

Example: Present shim is **2.95 mm.**
Measured clearance is **0.47 mm.**
Replace **2.95 mm** shim with **3.15 mm** shim.

5. Remeasure the valve clearance and readjust if necessary.

NOTICE

Be sure to remeasure the clearance after selecting a shim according to the table. If the clearance is out of the specified range, use the additional shim.

○If there is no valve clearance, use a shim that is a few sizes smaller, and remeasure the valve clearance.
- When installing the shim, face the marked side toward the valve lifter. At this time, apply engine oil to the shim or the valve lifter to keep the shim in place during camshaft installation.

NOTICE

Do not put shim stock under the shim. This may cause the shim to pop out at high rpm, causing extensive engine damage.
Do not grind the shim. This may cause it to fracture, causing extensive engine damage.

- Apply engine oil to the valve lifter surface and install the lifter.
- Install the camshaft (see Camshaft Installation in the Engine Top End chapter).
- Recheck the valve clearance and readjust if necessary.
- Install the removed parts (see appropriate chapters).

Exhaust Butterfly Valve Cable Inspection

- Remove the left side cover (see Side Cover Removal in the Frame chapter).
- Confirm whether pulley [A] is an angle shown in the figure. 41.7° ±7° [B]

○This position is original position of the pulley.

NOTE

○*Correct the position electrically after confirming the use is discontinued and there no damage when differing from the angle of shown in the figure.*

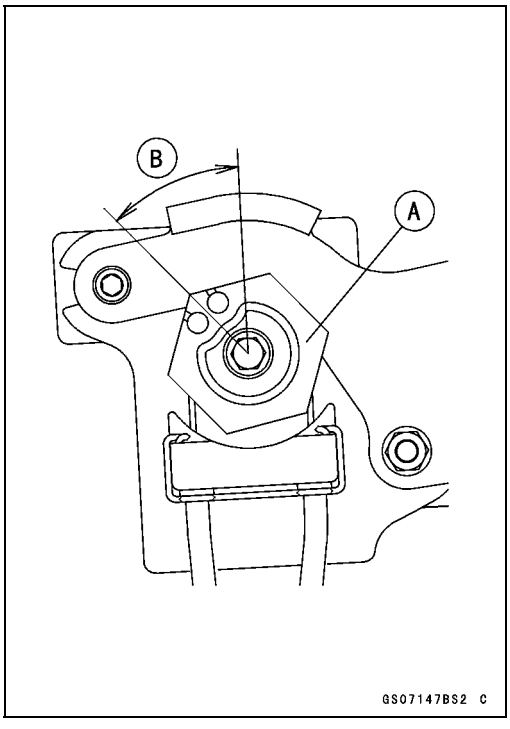

NOTICE

Do not correct the pulley position with the tool, forcibly. The actuator damage will occur.

★If the pulley angle is wrong, adjust the angle as follows.
○Turn the ignition switch to ON.
○Confirm the pulley turns clockwise and then counterclockwise.
○The pulley stops at this side of the original position by the learning control.
○Turn the ignition switch to OFF.
○The pulley returns to the original position.
★If the operation of the pulley is different, adjust the exhaust butterfly valve cables (see Exhaust Butterfly Valve Cable Adjustment).
★If the pulley does not return to the original position, adjust the pulley (see Exhaust Butterfly Valve Actuator Installation in the Fuel System (DFI) chapter).

Periodic Maintenance Procedures

- Check that there is no play in the inner cables [A] by pulling them lightly.

★If there is play in the inner cables, adjust them (see Exhaust Butterfly Valve Cable Adjustment).

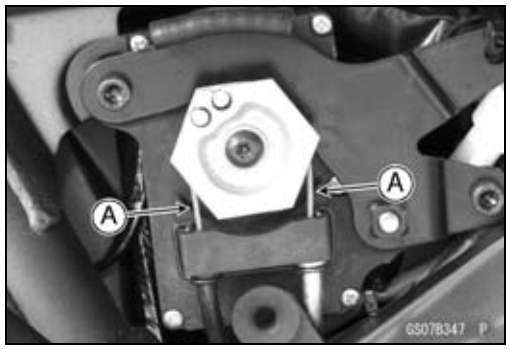

Exhaust Butterfly Valve Cable Adjustment

- Slide the dust covers [A].
- Loosen the locknuts [B].

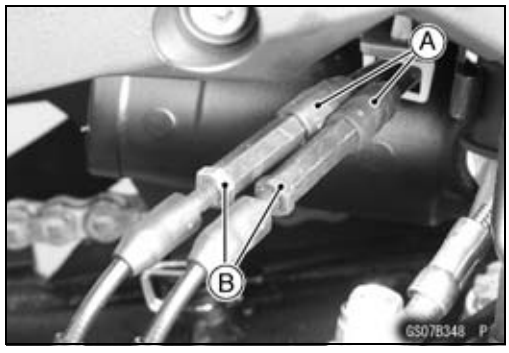

- Stretch the open cable (white) [A] first by using the adjuster [B].

○Turn the adjuster counterclockwise until it becomes hard to turn.
Locknut of White [C]

NOTICE

To keep the correct exhaust butterfly valve position, adjust the open cable first.
Do not overstretch. If the adjustment of the exhaust butterfly valve cables are incorrect, the exhaust butterfly valve actuator does not operate correctly.

- Then, stretch the close cable (black) [D] by using the adjuster [E].

○Turn the adjuster counterclockwise until it becomes hard to turn.
Locknut of Black [F]

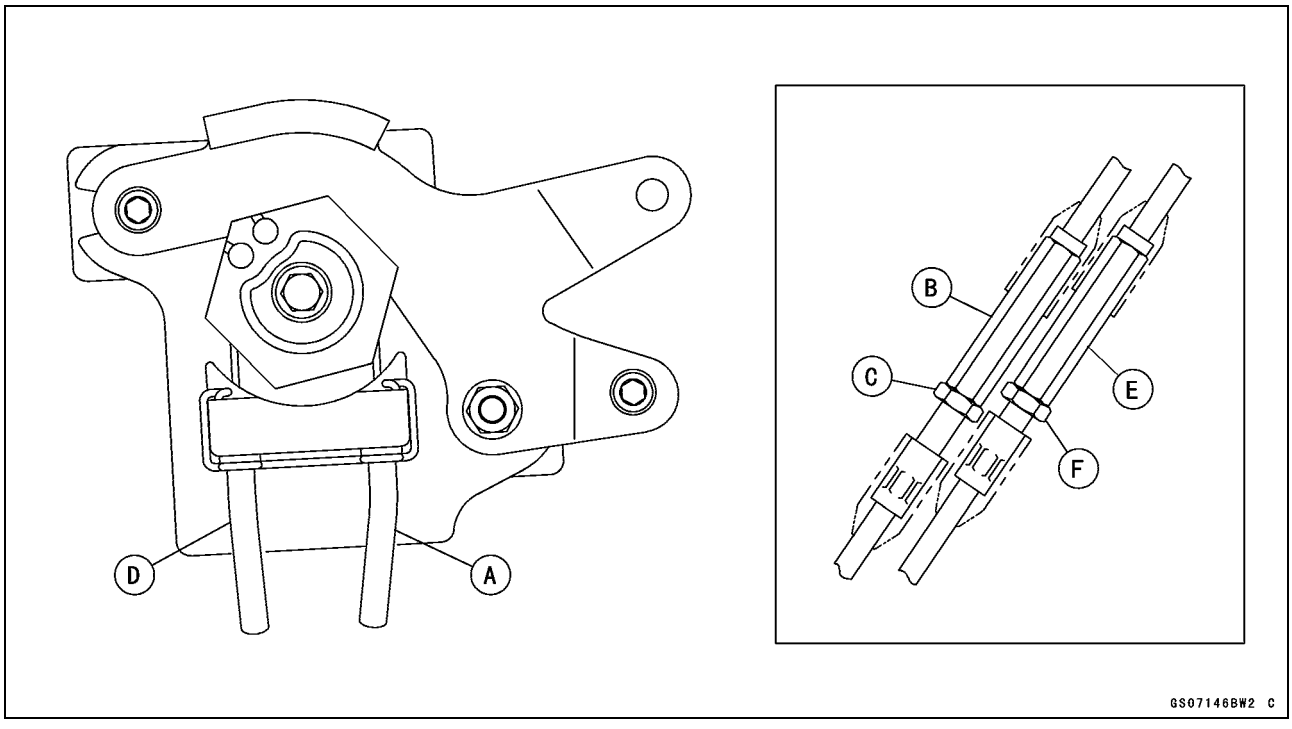

Periodic Maintenance Procedures

- Turn the ignition switch to ON and wait until the pulley [A] turns fully clockwise [B].
- Turn off the ignition switch when the pulley become fully clockwise position [C] as shown in the figure.

○The target position is a position in which the upper end [D] of the open cable and the screw [E] of the actuator become almost straight.

- The pulley stops at fully clockwise position.

NOTE

○*The exhaust butterfly valve is full closed position when the pulley turned fully clockwise. Therefore, the play [F] appears in the open cable when pulley is fully clockwise position. The open and close cables can be evenly stretching by adjusting this play.*

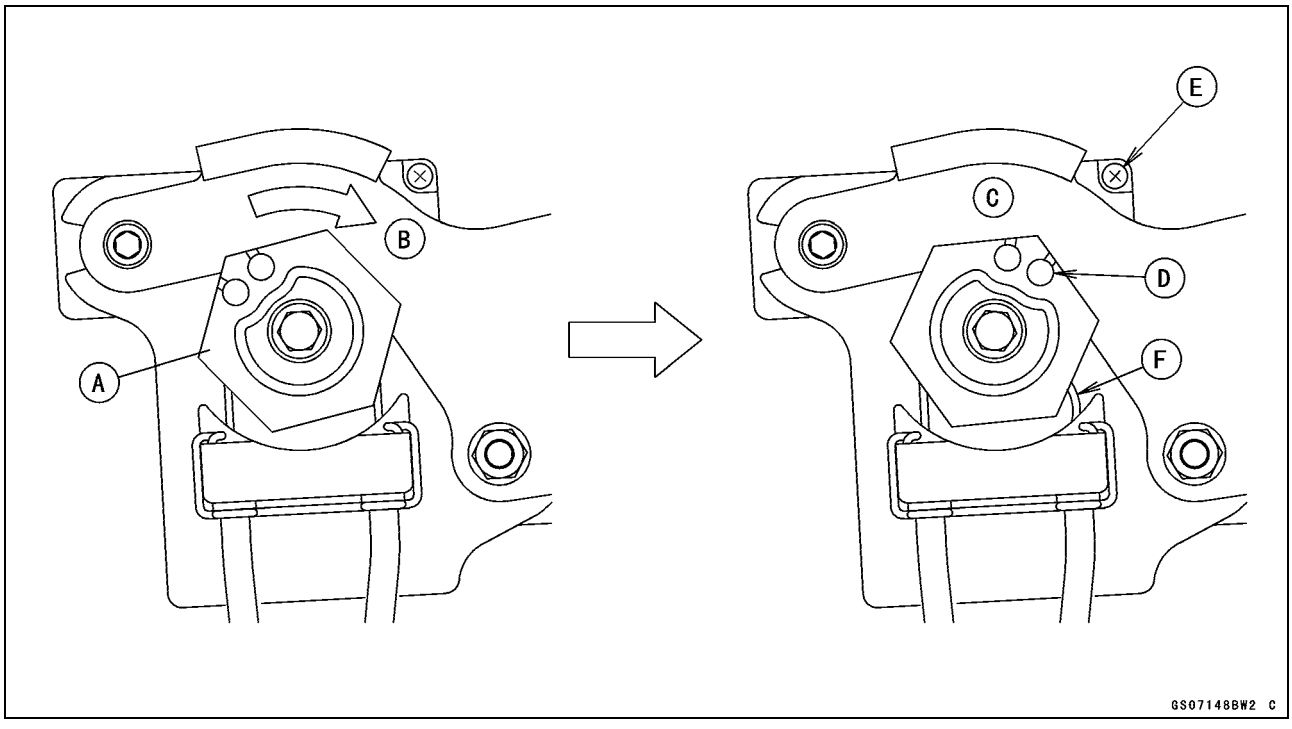

- Stretch the open cable (white) by using the adjuster [A].

○Turn the adjuster counterclockwise until it becomes hard to turn.

Locknut of White [B]

NOTICE

Do not overstretch. If the adjustment of the exhaust butterfly valve cables are incorrect, the exhaust butterfly valve actuator does not operate correctly.

- Tighten:

Torque - Exhaust Butterfly Valve Cable Adjuster Locknuts: 6.9 N·m (0.70 kgf·m, 61 in·lb)

- Cover the dust covers [C].
- Be sure that the dust covers [D] are in positions as shown.
- Turn the ignition switch to ON, and confirm the pulley turns counterclockwise and then clockwise.

★If the operation of the pulley is different, readjust the exhaust butterfly valve cables.

- Turn the ignition switch to OFF.

○The pulley returns to the original position.

- Confirm the pulley is original position.

★If the pulley is not at original position, adjust the pulley (see Exhaust Butterfly Valve Actuator Installation in the Fuel System (DFI) chapter).

- Check that the exhaust butterfly valve actuator operate correctly (see Exhaust Butterfly Valve Cable Installation in the Engine Top End chapter).

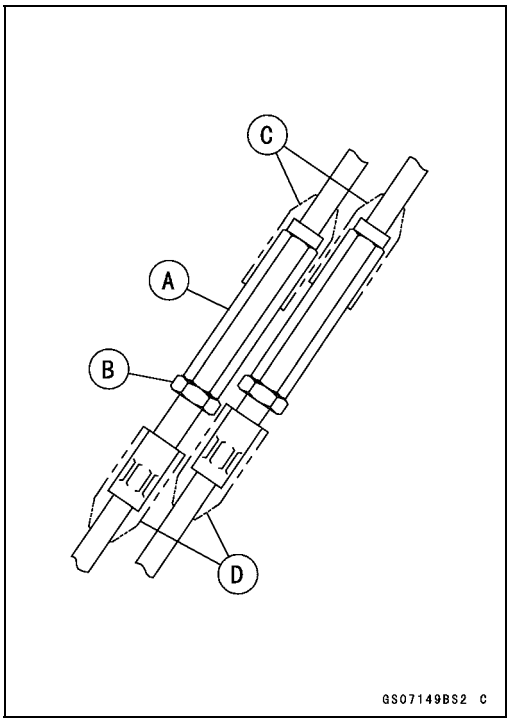

Air Suction System

Air Suction System Damage Inspection

- Remove the left side cover (see Side Cover Removal in the Frame chapter).
- Pull the air switching valve hose [A] out of the air cleaner housing.
- Start the engine and run it at idle speed.
- Plug the air switching valve hose end with your finger and feel vacuum pulsing in the hose.

★If there is no vacuum pulsation, check the hose line for leak. If there is no leak, check the air switching valve (see Air Switching Valve Unit Test in the Electrical System chapter) or air suction valve (see Air Suction Valve Inspection in the Engine Top End chapter).

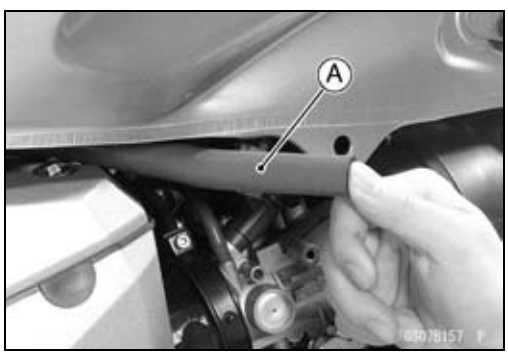

Periodic Maintenance Procedures

Clutch

Clutch Operation Inspection

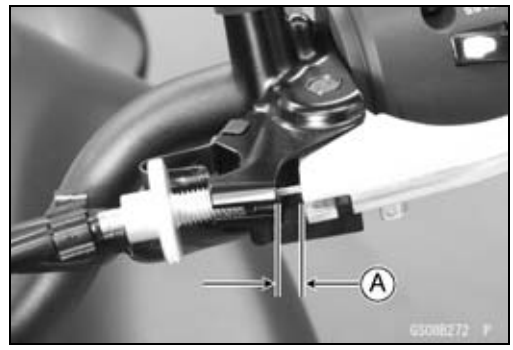

- Pull the clutch lever just enough to take up the free play [A].
- Measure the gap between the lever and the lever holder.

★If the gap is too wide, the clutch may not release fully. If the gap is too narrow, the clutch may not engage fully. In either case, adjust it.

Clutch Lever Free Play
Standard: 2 ~ 3 mm (0.08 ~ 0.12 in.)

⚠ WARNING

The engine and exhaust system get extremely hot during normal operation and can cause serious burns. Never touch the engine or exhaust pipe during clutch adjustment.

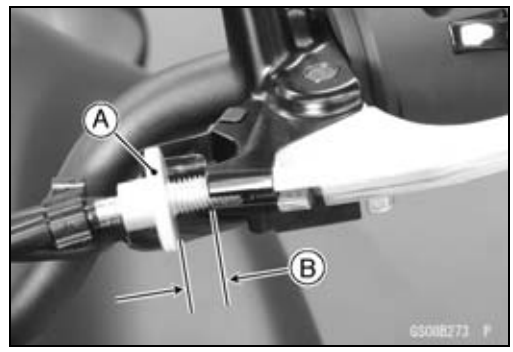

- Turn the adjuster [A] so that 5 ~ 6 mm (0.20 ~ 0.24 in.) [B] of threads are visible.

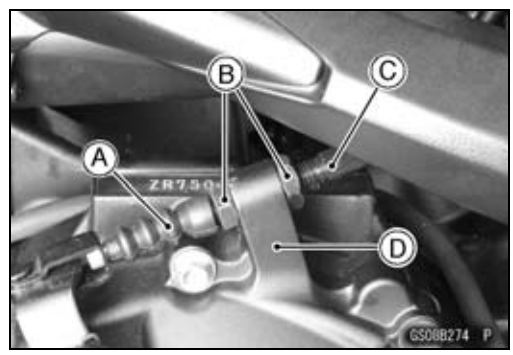

- Slide the dust cover [A] at the clutch cable lower end out of place.
- Loosen both adjusting nuts [B] at the clutch cover as far as they will go.
- Pull the clutch outer cable [C] tight and tighten the adjusting nuts against the clutch cover [D].
- Slip the dust cover back onto place.
- Turn the adjuster at the clutch lever until the free play is correct.

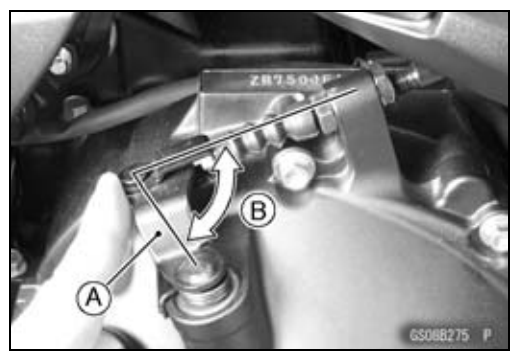

- Push the release lever [A] toward the front of the motorcycle until it becomes hard to turn.

○At this time, the release lever should have the proper angle shown.
60° [B]

★If the angle is wrong, check the clutch and release parts for wear.

⚠ WARNING

Too much cable play can prevent clutch disengagement and cause an accident resulting in serious injury or death. When adjusting the clutch or replacing the cable, be sure the upper end of the clutch outer cable is fully seated in its fitting, or it could slip into place later, creating enough cable play to prevent clutch disengagement.

- After the adjustment, start the engine and check that the clutch does not slip and that it releases properly.

Wheels/Tires

Air Pressure Inspection

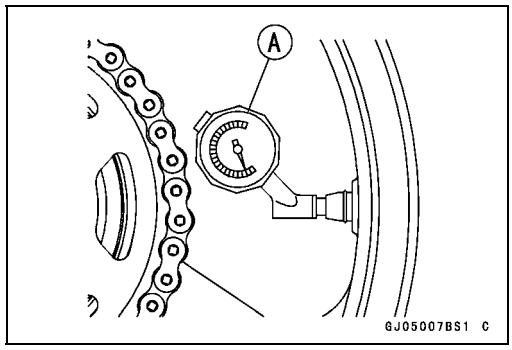

- Remove the air valve cap.
- Measure the tire air pressure with an air pressure gauge [A] when the tires are cold (that is, when the motorcycle has not been ridden more than a mile during the past 3 hours).
- Install the air valve cap.

★Adjust the tire air pressure according to the specifications if necessary.

Air Pressure (when Cold)

Front:	**Up to 180 kg (397 lb)** **250 kPa (2.5 kgf/cm², 36 psi)**
Rear:	**Up to 180 kg (397 lb)** **290 kPa (2.9 kgf/cm², 42 psi)**

Wheel/Tire Damage Inspection

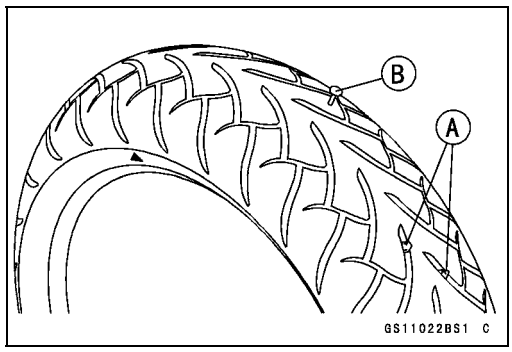

- Remove any imbedded stones [A] or other foreign particles [B] from tread.
- Visually inspect the tire for cracks and cuts, and replace the tire if necessary. Swelling or high spots indicate internal damage, requiring tire replacement.
- Visually inspect the wheel for cracks, cuts and dents damage.

★If any damage is found, replace the wheel if necessary.

Tire Tread Wear Inspection

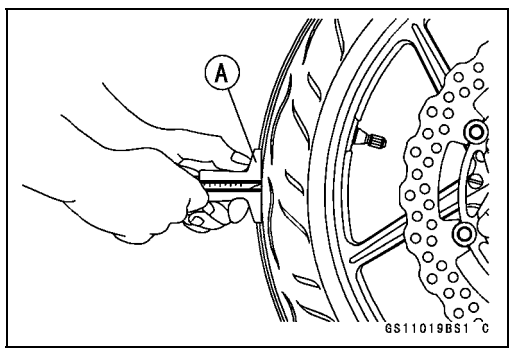

As the tire tread wears down, the tire becomes more susceptible to puncture and failure. An accepted estimate is that 90% of all tire failures occur during the last 10% of tread life (90% worn). So it is false economy and unsafe to use the tires until they are bald.

- Measure the tread depth at the center of the tread with a depth gauge [A]. Since the tire may wear unevenly, take measurement at several places.

★If any measurement is less than the service limit, replace the tire (see Tire Removal/Installation in the Wheels/Tires chapter).

Periodic Maintenance Procedures

Tread Depth

Standard:

Front	**4.0 mm (0.16 in.)**
Rear	**5.0 mm (0.20 in.)**

Service Limit:

Front	**1 mm (0.04 in.)**
	(AT, CH, DE) 1.6 mm (0.06 in.)
Rear	**2 mm (0.08 in.)** **(Up to 130 km/h (80 mph))**
	3 mm (0.12 in.) **(Over 130 km/h (80 mph))**

⚠ WARNING

Some replacement tires may adversely affect handling and cause an accident resulting in serious injury or death. To ensure proper handling and stability, use only the recommended standard tires for replacement, inflated to the standard pressure.

NOTE

○*Most countries may have their own regulations a minimum tire tread depth: be sure to follow them.*

○*Check and balance the wheel when a tire is replaced with a new one.*

Wheel Bearing Damage Inspection

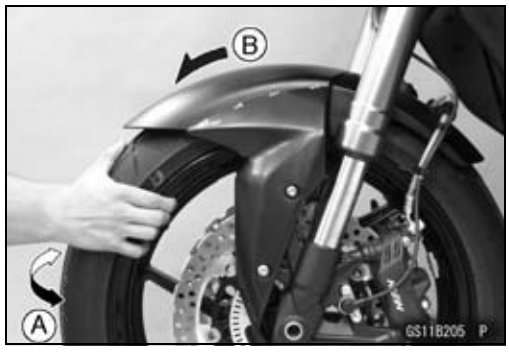

- Raise the front wheel off the ground with the jack (see Front Wheel Removal in the Wheels/Tires chapter).
- Turn the handlebar all the way to the right or left.
- Inspect the roughness of the front wheel bearing by pushing and pulling [A] the wheel.
- Spin [B] the front wheel lightly, and check for smoothly turn, roughness, binding or noise.

★If roughness, binding or noise is found, remove the front wheel and inspect the wheel bearing (see Front Wheel Removal, Hub Bearing Inspection in the Wheels/Tires chapter).

- Raise the rear wheel off the ground with the stand (see Rear Wheel Removal in the Wheels/Tires chapter).
- Inspect the roughness of the rear wheel bearing by pushing and pulling [A] the wheel.
- Spin [B] the rear wheel lightly, and check for smoothly turn, roughness, binding or noise.

★If roughness, binding or noise is found, remove the rear wheel and inspect the wheel bearing (see Rear Wheel Removal, Hub Bearing Inspection in the Wheels/Tires chapter) and coupling (see Coupling Bearing Inspection in the Final Drive chapter).

Drive Train

Drive Chain Lubrication Condition Inspection

- If a special lubricant is not available, a heavy oil such as SAE 90 is preferred to a lighter oil because it will stay on the chain longer and provide better lubrication.
- If the chain appears especially dirty, clean it before lubrication.

NOTICE

The O-rings between the side plates seal in the lubricant between the pin and the bushing. To avoid damaging the O-rings and resultant loss of lubricant, observe the following rules.
Use only kerosene or diesel oil for cleaning of the O-ring of the drive chain. Any other cleaning solution such as gasoline or trichloroethylene will cause deterioration and swelling of the O-ring. Immediately blow the chain dry with compressed air after cleaning. Complete cleaning and drying the chain within 10 minutes.

- Apply oil to the sides of the rollers so that oil will penetrate to the rollers and bushings. Apply the oil to the O-rings so that the O-rings will be coated with oil.
- Wipe off any excess oil.
  Oil Applied Areas [A]
  O-rings [B]

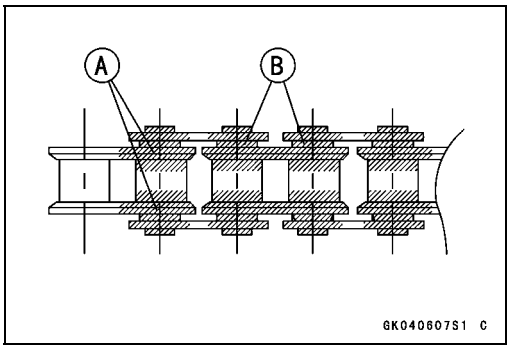

Drive Chain Slack Inspection

NOTE

○*Check the slack with the motorcycle setting on its sidestand.*
○*Clean the chain if it is dirty, and lubricate it if it appears dry.*

- Check the wheel alignment (see Wheel Alignment Inspection).
- Rotate the rear wheel to find the position where the chain is tightest.
- Measure the vertical movement (chain slack) [A] midway between the sprockets.

★If the chain slack exceeds the standard, adjust it.

Chain Slack
Standard: 30 ~ 40 mm (1.2 ~ 1.6 in.)

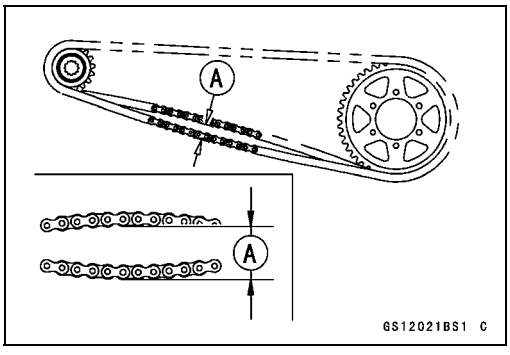

Periodic Maintenance Procedures

Drive Chain Slack Adjustment

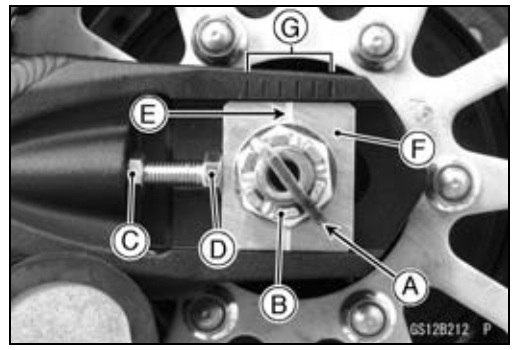

- Remove the cotter pin [A], and loosen the axle nut [B].
- Loosen the both chain adjuster locknuts [C].

★If the chain is too loose, turn out the left and right chain adjusters [D] evenly.

★If the chain is too tight, turn in the left and right chain adjusters evenly, and kick the wheel forward.

- Turn both chain adjusters evenly until the drive chain has the correct amount of slack. To keep the chain and wheel properly aligned, the notch [E] on the left wheel alignment indicator [F] should align with the same swingarm mark or position [G] that the right indicator notch aligns with.

⚠ WARNING

Misalignment of the wheel will result in abnormal wear and may result in an unsafe riding condition. Be sure the wheel is properly aligned.

- Tighten both chain adjuster locknuts securely.
- Tighten the axle nut.

Torque - Rear Axle Nut: 108 N·m (11.0 kgf·m, 79.7 ft·lb)

- Turn the wheel, measure the chain slack again at the tightest position, and readjust if necessary.

- Insert a new cotter pin [A].

NOTE

○*When inserting the cotter pin, if the slots in the nut do not align with the cotter pin hole in the axle, tighten the nut clockwise [B] up to next alignment.*

○*It should be within 30°.*

○*Loosen once and tighten again when the slot goes past the nearest hole.*

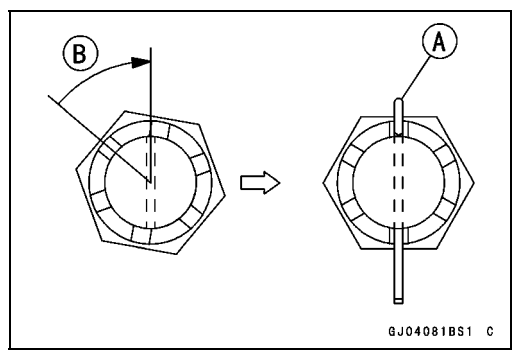

- Bend the cotter pin [A] over the nut.

⚠ WARNING

A loose axle nut can lead to an accident resulting in serious injury or death. Tighten the axle nut to the proper torque and install a new cotter pin.

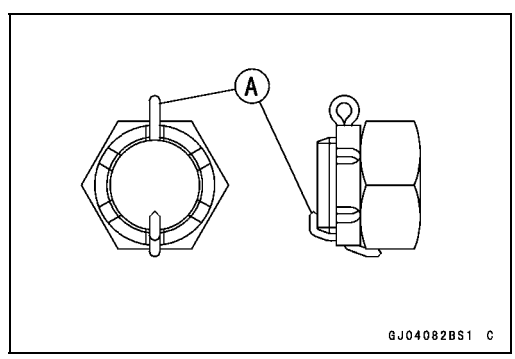

Periodic Maintenance Procedures

Wheel Alignment Inspection

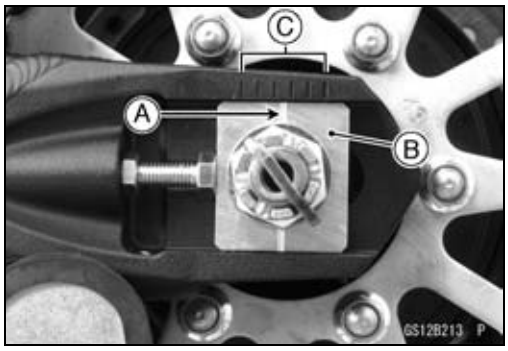

- Check that the notch [A] on the left alignment indicator [B] aligns with the same swingarm mark or position [C] that the right alignment indicator notch aligns with.

★If they do not, adjust the chain slack and align the wheel alignment (see Drive Chain Slack Adjustment).

NOTE

○*Wheel alignment can be also checked using the straightedge or string method.*

⚠ WARNING

Misalignment of the wheel will result in abnormal wear and may result in an unsafe riding condition. Be sure the wheel is properly aligned.

Drive Chain Wear Inspection

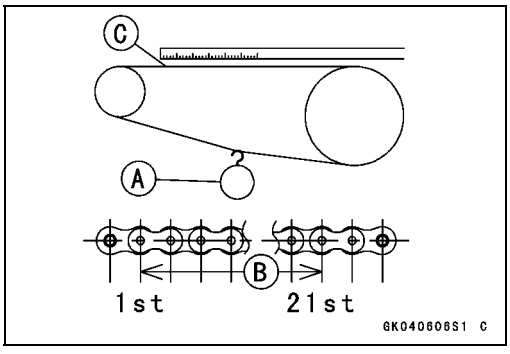

- Remove the chain cover (see Drive Chain Removal in the Final Drive chapter).
- Rotate the rear wheel to inspect the drive chain for damaged rollers, and loose pins and links.

★If there is any irregularity, replace the drive chain.

★Lubricate the drive chain if it appears dry.

- Stretch the chain taut by hanging a 98 N (10 kg, 20 lb) weight [A] on the chain.
- Measure the length of 20 links [B] on the straight part [C] of the chain from the pin center of the 1st pin to the pin center of the 21st pin. Since the chain may wear unevenly, take measurements at several places.

★If any measurements exceed the service limit, replace the chain. Also, replace the front and rear sprockets when the drive chain is replaced.

Drive Chain 20-link Length

Standard:	**317.5 ~ 318.2 mm (12.50 ~ 12.53 in.)**
Service Limit:	**323 mm (12.7 in.)**

⚠ WARNING

A chain that breaks or jumps off the sprockets could snag on the engine sprocket or lock the rear wheel, severely damaging the motorcycle and causing it to go out of control. Inspect the chain for damage and proper adjustment before each ride. If chain wear exceeds the service limit, replace it with the standard chain. It is an endless type and should not be cut for installation.

Standard Chain

Make:	**ENUMA**
Type:	**EK520MVXL1 (ZR750NB/PB Early Models)**
	EK520MVXL2 (ZR750NB/PB Late Models ~)
Link:	**112 Links**

Periodic Maintenance Procedures

Chain Guide Wear Inspection

- Remove the swingarm (see Swingarm Removal in the Suspension chapter).
- Visually inspect the chain guide [A].

★Replace the chain guide if it shows any signs of abnormal wear or damage.

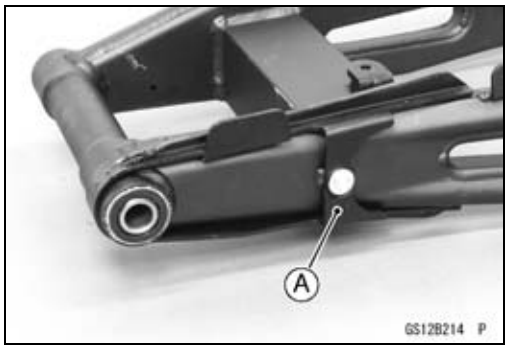

Brake System

Brake Fluid Leak (Brake Hose and Pipe) Inspection

- For ABS equipped models; note the following.
- Remove the fuel tank (see Fuel Tank Removal in the Fuel System (DFI) chapter).
- Apply the brake lever or pedal and inspect the brake fluid leak from the brake hoses [A], pipes [B] (ABS equipped models) and fittings [C].

★If the brake fluid leaked from any position, inspect or replace the problem part.

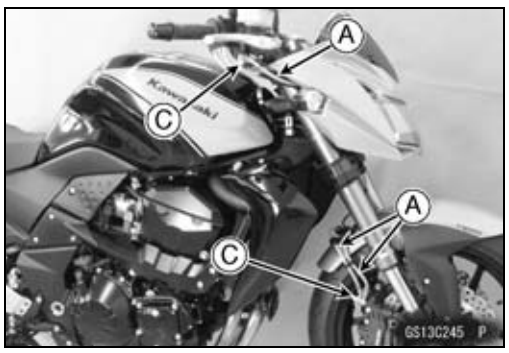

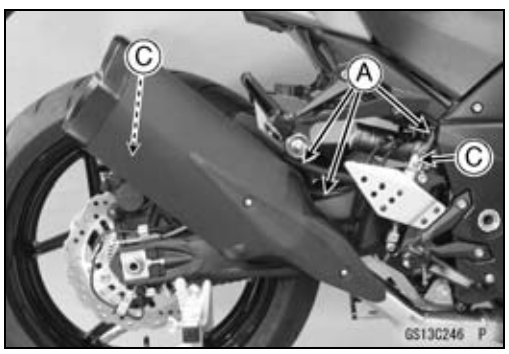

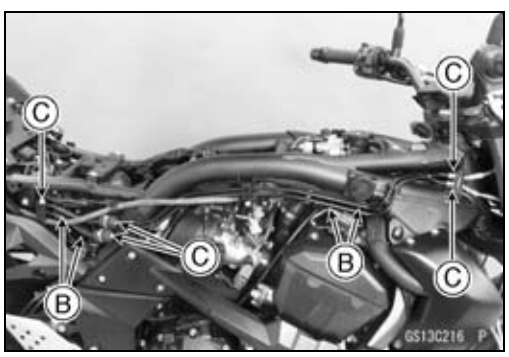

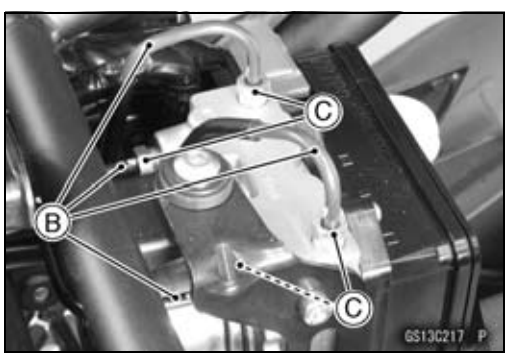

Brake Hose and Pipe Damage and Installation Condition Inspection

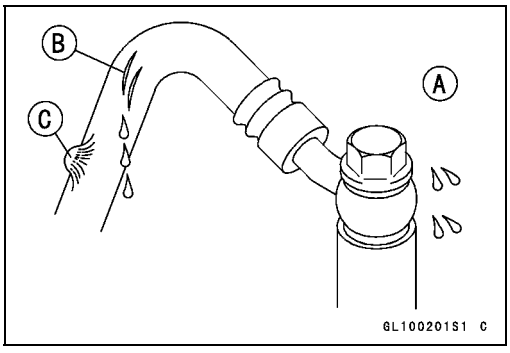

- For ABS equipped models; note the following.
- Remove the fuel tank (see Fuel Tank Removal in the Fuel System (DFI) chapter).
- Inspect the brake hoses, pipes and fittings for deterioration, cracks and signs of leakage.

○The high pressure inside the brake line can cause fluid to leak [A] or the hose, pipes (ABS equipped models) to burst if the line is not properly maintained. Bend and twist the rubber hose while examining it.

★Replace the hose and pipe (ABS equipped models) if any crack [B], bulge [C] or leakage is noticed.

★Tighten any brake hose banjo bolts and brake pipe joint nuts.

Torque - Brake Hose Banjo Bolts: 25 N·m (2.5 kgf·m, 18 ft·lb)
Brake Pipe Joint Nuts (ABS Equipped Models): 18 N·m (1.8 kgf·m, 13 ft·lb)

- Inspect the brake hose routing.

★If any brake hose routing is incorrect, route the brake hose according to Cable, Wire, and Hose Routing section in the Appendix chapter.

Brake Operation Inspection

- Inspect the operation of the front and rear brake by running the vehicle on the dry road.

★If the brake operation is insufficiency, inspect the brake system.

⚠ WARNING

When test riding the vehicle, be aware of surrounding traffic for your safety.

Brake Fluid Level Inspection

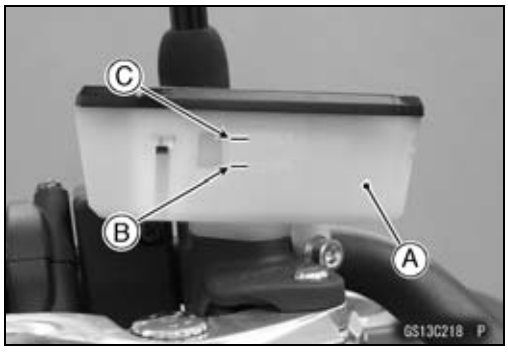

- Check that the brake fluid level in the front brake reservoir [A] is above the lower level line [B].

NOTE

○*Hold the reservoir horizontal by turning the handlebar when checking brake fluid level.*

★If the fluid level is lower than the lower level line, fill the reservoir to the upper level line [C].

Periodic Maintenance Procedures

- Follow the procedure below to install the front brake fluid reservoir cap correctly.

○First, tighten the front brake fluid reservoir cap [B] clockwise [C] by hand until slight resistance is felt indicating that the cap is seated on the reservoir body, then tighten the cap an additional 1/6 turn [D] while holding the brake fluid reservoir body [A].

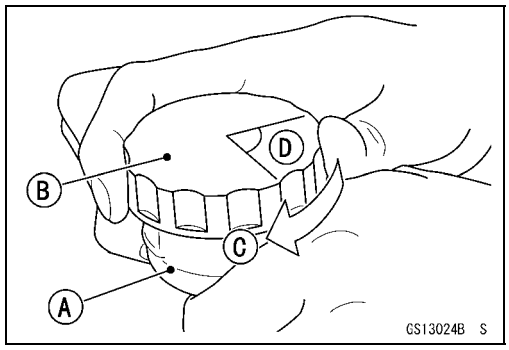

- Check that the brake fluid level in the rear brake reservoir [A] is above the lower level line [B].

★If the fluid level is lower than the lower level line, fill the reservoir to the upper level line [C].

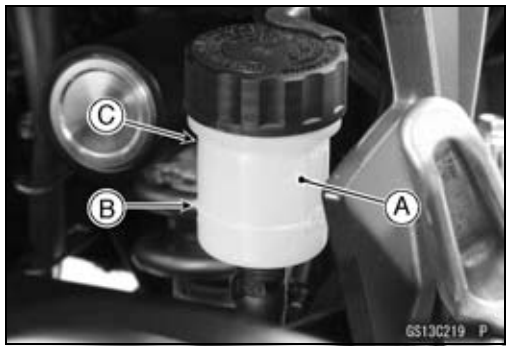

⚠ WARNING

Mixing brands and types of brake fluid can reduce the brake system's effectiveness and cause an accident resulting in injury or death. Do not mix two brands of brake fluid. Change the brake fluid in the brake line completely if the brake fluid must be refilled but the type and brand of the brake fluid that is already in the reservoir are unidentified.

Recommended Disc Brake Fluid
Grade: DOT4

- Follow procedure below to install the rear brake fluid reservoir cap correctly.

○First, tighten the rear brake fluid reservoir cap [B] clockwise [C] by hand until slight resistance is felt indicating that the cap is seated on the reservoir body, then tighten the cap an additional 1/6 turn [D] while holding the brake fluid reservoir body [A].

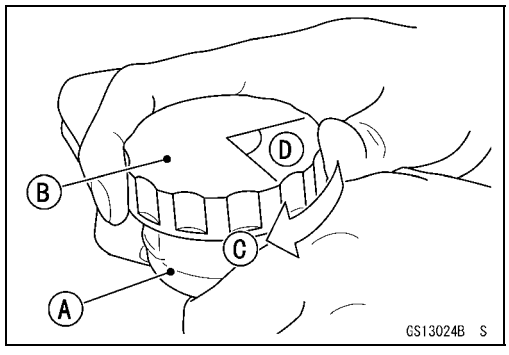

Brake Pad Wear Inspection

- Remove the brake pads (see Front/Rear Brake Pad Removal in the Brakes chapter).
- Check the lining thickness [A] of the pads in each caliper.

★If the lining thickness of either pad is less than the service limit [B], replace both pads in the caliper as a set.

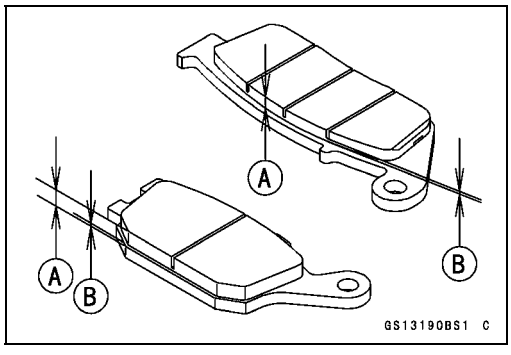

Pad Lining Thickness

Standard:	
Front	**4.0 mm (0.16 in.)**
Rear	**5.0 mm (0.20 in.)**
Service Limit:	**1 mm (0.04 in.)**

Brake Light Switch Operation Inspection

- Turn on the ignition switch.
- The brake light [A] should go on when the brake lever is applied or after the brake pedal is depressed about 10 mm (0.39 in.).

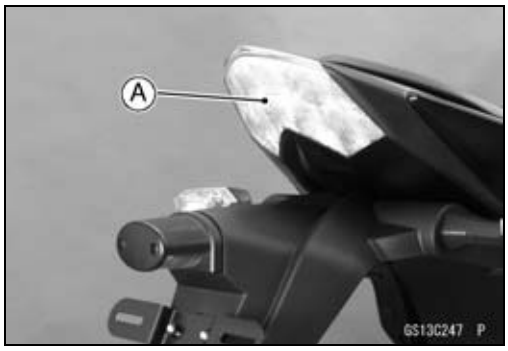

★If it does not, adjust the brake light switch.

- While holding the switch body, turn the adjusting nut to adjust the switch.
  Switch Body [A]
  Adjusting Nut [B]
  Light sooner as the body rises [C]
  Light later as the body lowers [D]

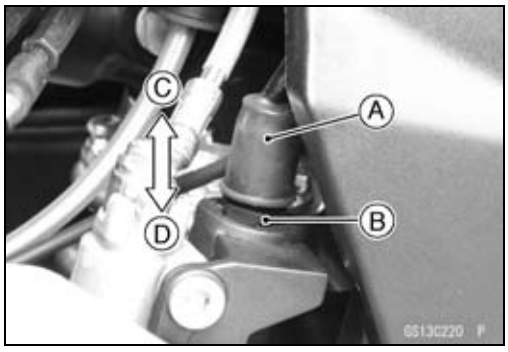

NOTICE

To avoid damaging the electrical connections inside the switch, be sure that the switch body does not turn during adjustment.

★If it does not go on, inspect or replace the following items.
Battery (see Charging Condition Inspection in the Electrical System chapter)
Brake Light (see Tail/Brake Light Removal in the Electrical System chapter)
Main Fuse 30 A and Taillight Fuse 10 A (see Fuse Inspection in the Electrical System chapter)
Front Brake Light Switch [A] (see Switch Inspection in the Electrical System chapter)
Rear Brake Light Switch (see Switch Inspection in the Electrical System chapter)
Harness (see Wiring Inspection in the Electrical System chapter)

Suspensions

Front Forks/Rear Shock Absorber Operation Inspection

- Pump the forks down and up [A] 4 or 5 times, and inspect the smooth stroke.

★If the forks do not smoothly or noise is found, inspect the fork oil level or fork clamps (see Front Fork Oil Change in the Suspension chapter).

Periodic Maintenance Procedures

- Pump the seat down and up [A] 4 or 5 times, and inspect the smooth stroke.

★If the shock absorber does not smoothly stroke or noise is found, inspect the oil leak (see Rear Shock Absorber Oil Leak Inspection).

Front Fork Oil Leak Inspection

- Visually inspect the front forks [A] for oil leakage.

★Replace or repair any defective parts, if necessary.

Rear Shock Absorber Oil Leak Inspection

- Visually inspect the shock absorber [A] for oil leakage.

★If the oil leakage is found on it, replace the shock absorber with a new one.

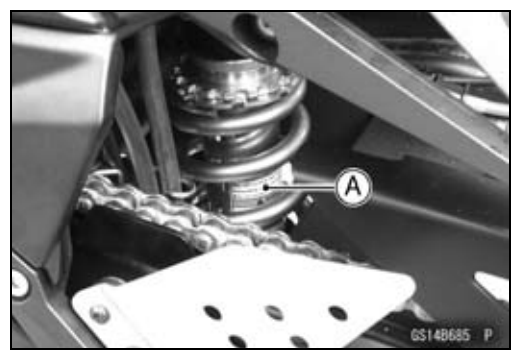

Rocker Arm Operation Inspection

- Pump the seat down and up 4 or 5 times, and inspect the smooth stroke.

★If the rocker arm [A] does not smoothly stroke or noise is found, inspect the fasteners and bearings (see Rocker Arm/Tie-Rod Bearing, Sleeve Inspection in the Suspension chapter).

Tie-Rod Operation Inspection

- Pump the seat down and up 4 or 5 times, and inspect the smooth stroke.

★If the tie-rods [A] do not smoothly stroke or noise is found, inspect the fasteners and tie-rod bearings (see Rocker Arm/Tie-Rod Bearing, Sleeve Inspection in the Suspension chapter).

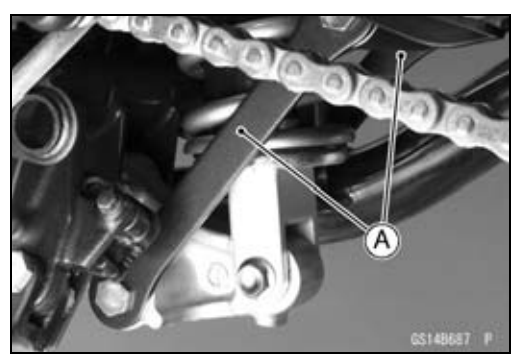

Steering System

Steering Play Inspection

- Raise the front wheel off the ground with the jack.

  Special Tools - Jack: 57001-1238
  Jack Attachment: 57001-1608

- With the front wheel pointing straight ahead, alternately tap each end of the handlebar. The front wheel should swing fully left and right from the force of gravity until the fork hits the stop.

★If the wheel binds or catches before the stop, the steering is too tight.

- Feel for steering looseness by pushing and pulling the forks.

★If you feel looseness, the steering is too loose.

NOTE

○*The cables and wiring will have some effect on the motion of the fork which must be taken into account.*
○*Be sure the leads and cables are properly routed.*
○*The bearings must be in good condition and properly lubricated in order for any test to be valid.*

Steering Play Adjustment

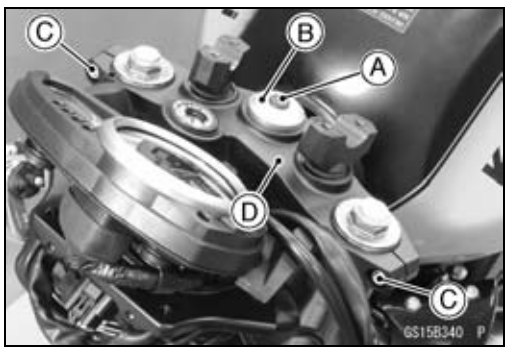

- Remove:
  Upper Fairing (see Upper Fairing Removal in the Frame chapter)
  Handlebar (see Handlebar Removal in the Steering chapter)
  Steering Stem Head Bolt Plug [A]
  Steering Stem Head Bolt [B]
  Upper Front Fork Clamp Bolts [C] (Loosen)
  Upper Fairing Bracket Bolts (see Upper Fairing Bracket Removal in the Frame chapter)
  Stem Head [D]

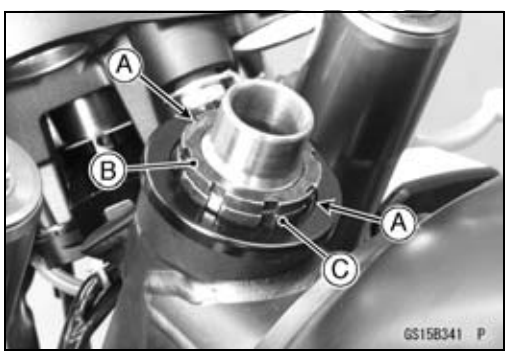

- Bend the claws [A] of the claw washer straighten.
- Remove the steering stem locknut [B] and claw washer [C].

Periodic Maintenance Procedures

- Adjust the steering.

Special Tool - Steering Stem Nut Wrench [A]: 57001-1100

★If the steering is too tight, loosen the stem nut a fraction of a turn.

★If the steering is too loose, tighten the stem nut a fraction of a turn.

NOTE

○*Turn the stem nut 1/8 turn at time maximum.*

- Install the claw washer [A] so that its bent side [B] faces upward, and engage the bent claws with the grooves of stem locknut [C].
- Hand tighten the stem locknut until it touches the claw washer.
- Tighten the stem locknut clockwise until the claws are aligned with the grooves (ranging from 2nd to 4th) of stem nut [D], and bend the 2 claws downward [E].
- Install the stem head.
- Tighten:

Torque - Steering Stem Head Bolt: 108 N·m (11.0 kgf·m, 79.7 ft·lb)
Upper Front Fork Clamp Bolts: 20 N·m (2.0 kgf·m, 15 ft·lb)

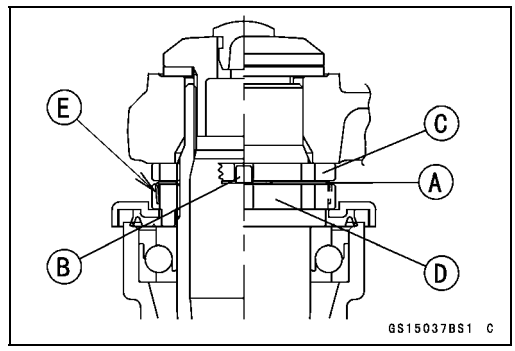

- Check the steering again.

★If the steering is still too tight or too loose, repeat the adjustment.

- Install the removed parts (see appropriate chapters).

Steering Stem Bearing Lubrication

- Remove the steering stem (see Stem, Stem Bearing Removal in the Steering chapter).
- Using a high-flash point solvent, wash the upper and lower ball bearings in the cages, and wipe the upper and lower outer races, which are press-fitted into the frame head pipe, clean off grease and dirt.
- Visually check the outer races and the ball bearings.

★Replace the bearing assemblies if they show wear or damage.

- Pack the upper and lower ball bearings [A] in the cages with grease, and apply a light coat of grease to the upper and lower outer races.
- Install the steering stem (see Stem, Stem Bearing Installation in the Steering chapter).
- Adjust the steering (see Steering Play Adjustment).

Periodic Maintenance Procedures

Electrical System

Spark Plug Condition Inspection

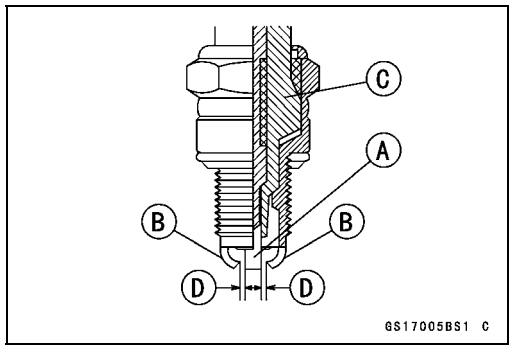

- Remove the spark plugs (see Spark Plug Replacement), and visually inspect.
- Clean the spark plug, preferably in a sandblasting device, and then clean off any abrasive particles. The plug may also be cleaned using a high-flash point solvent and a wire brush or other suitable tool.

★If the spark plug center electrode [A] and/or side electrode [B] are corrected or damaged, or if the insulator [C] is cracked, replace the spark plug.

- Measure the gaps [D] with a wire-type thickness gauge.

★If the gap is incorrect, carefully bend the side electrode with a tool to obtain the correct gap.

Spark Plug Gap: **0.7 ~ 0.8 mm (0.028 ~ 0.031 in.)**

- Use the standard spark plug or its equivalent.

Spark Plug: **NGK CR9EK**

Periodic Maintenance Procedures

Lights and Switches Operation Inspection

First Step

- Turn on the ignition switch.
- The following lights should go on according to below table.

City Lights [A]	go on
Taillight [B]	goes on
License Plate Light [C]	goes on
Meter Panel LCD [D]	goes on
Neutral Indicator Light (LED) [E]	goes on
Oil Pressure Warning Indicator Symbol and Light (LED) [F]	blink
ABS Indicator Light (LED) [G] (ABS Equipped Models)	goes on

★If the light does not go on, inspect or replace the following item.

Battery (see Charging Condition Inspection in the Electrical System chapter)
Main Fuse 30 A and Taillight Fuse 10 A (see Fuse Inspection in the Electrical System chapter)
Applicable Bulb (see Wiring Diagram in the Electrical System chapter)
Meter Unit for Meter Panel LCD (see Electronic Combination Meter Unit Inspection in the Electrical System chapter)
Meter Unit for Neutral Indicator Light (LED) (see Electronic Combination Meter Unit Inspection in the Electrical System chapter)
Meter Unit for Oil Pressure Warning Indicator Light (LED) (see Electronic Combination Meter Unit Inspection in the Electrical System chapter)
ECU (see ECU Power Supply Inspection in the Fuel System (DFI) chapter)
Ignition Switch (see Switch Inspection in the Electrical System chapter)
Neutral Switch (see Switch Inspection in the Electrical System chapter)
Harness (see Wiring Inspection in the Electrical System chapter)
ABS Indicator Light (LED) (ABS Equipped Models) (see ABS Indicator Light (LED) Inspection in the Brakes chapter)

- Turn off the ignition switch.
- The all lights should go off.

★If the light does not go off, replace the ignition switch.

Second Step

- Turn the ignition switch to P (Park) position.
- The city light, taillight and license plate light should go on.

★If the light does not go on, inspect or replace the following item.

Ignition Switch (see Switch Inspection in the Electrical System chapter)

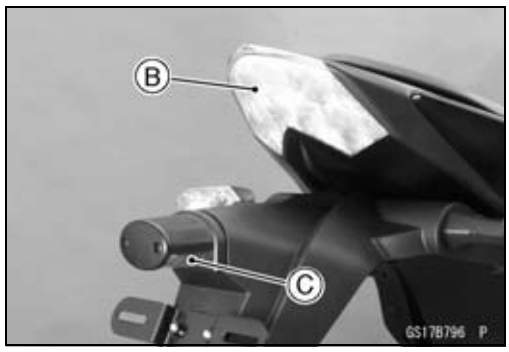

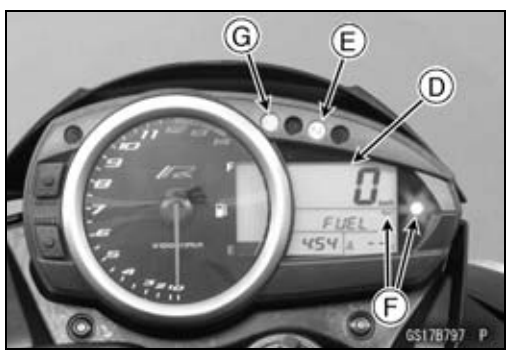

Third Step

- Turn on the turn signal switch [A] (left or right position).
- The left or right turn signal lights [B] (front and rear) according to the switch position should flash.
- The turn signal indicator light (LED) [C] in the meter unit should flash.

★If the each light does not flash, inspect or replace the following item.

Turn Signal Light Bulb (see Turn Signal Light Bulb Replacement in the Electrical System chapter)
Meter Unit for Turn Signal Light Indicator Light (LED) (see Electronic Combination Meter Unit Inspection in the Electrical System chapter)
Turn Signal Relay Fuse 10 A (see Fuse Inspection in the Electrical System chapter)
Turn Signal Switch (see Switch Inspection in the Electrical System chapter)
Turn Signal Relay (see Turn Signal Relay Inspection in the Electrical System chapter)
Harness (see Wiring Inspection in the Electrical System chapter)

- Push the turn signal switch.
- The turn signal lights and indicator light (LED) should go off.

★If the light does not go off, inspect or replace the following item.

Turn Signal Switch (see Switch Inspection in the Electrical System chapter)
Turn Signal Relay (see Turn Signal Relay Inspection in the Electrical System chapter)

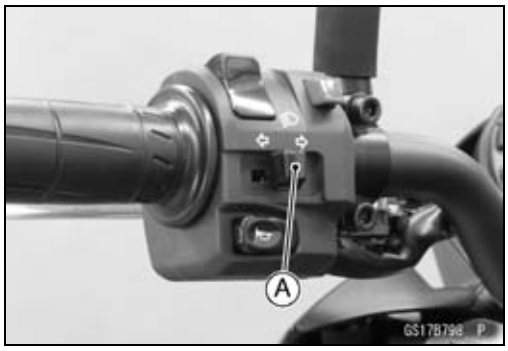

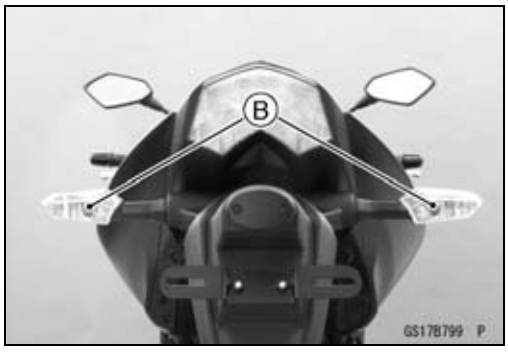

Fourth Step

- Set the dimmer switch [A] to low beam position.
- Start the engine.
- The low beam headlight should go on.

★If the low beam headlight does not go on, inspect or replace the following item.

Headlight Low Beam Bulb (see Headlight Bulb Replacement in the Electrical System chapter)
Headlight Fuse 10 A (see Fuse Inspection in the Electrical System chapter)
Dimmer Switch (see Switch Inspection in the Electrical System chapter)
Headlight Relay in Relay Box (see Relay Circuit Inspection in the Electrical System chapter)
Harness (see Wiring Inspection in the Electrical System chapter)

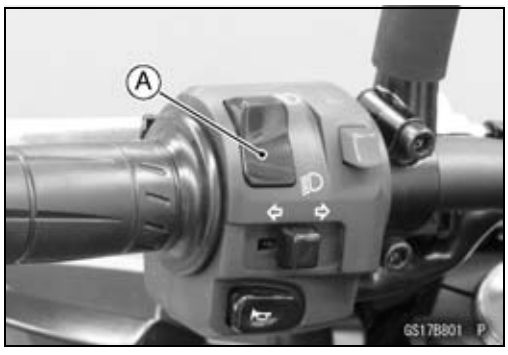

Periodic Maintenance Procedures

- Set the dimmer switch to high beam position.
- The low beam [A] and high beam [B] headlights should go on.
- The high beam indicator light (LED) [C] should go on.

★If the high beam headlight and/or high beam indicator light (LED) does not go on, inspect or replace the following item.
  Headlight High Beam Bulb (see Headlight Bulb Replacement in the Electrical System chapter)
  Dimmer Switch (see Switch Inspection in the Electrical System chapter)

- Turn off the engine stop switch.
- The low beam and high beam headlights should stay going on.

★If the headlights and high beam indicator light (LED) does go off, inspect or replace the following item.
  Headlight Relay in Relay Box (see Relay Circuit Inspection in the Electrical System chapter)

- Turn off the ignition switch.
- The headlights and high beam indicator light (LED) should go off.

Headlight Aiming Inspection

- Inspect the headlight beam for aiming.

★If the headlight beam points to one side rather than straight ahead, adjust the horizontal beam.

Headlight Beam Horizontal Adjustment

- Turn the horizontal adjuster [A] on the headlights in or out until the beam points straight ahead.

★If the headlight beam points too low or high, adjust the vertical beam.

Headlight Beam Vertical Adjustment

- Turn the vertical adjuster [A] on the headlights in or out to adjust the headlight vertically.

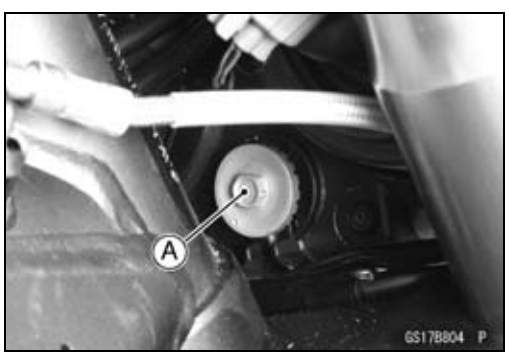

NOTE

○*ON high beam, the brightest points should be slightly below horizontal with the motorcycle on its wheels and the rider seated. Adjust the headlight to the proper angle according to local regulations.*

Sidestand Switch Operation Inspection

- Inspect the sidestand switch [A] operation accordance to the following table.

Sidestand Switch Operation

Sidestand	Gear Position	Clutch Lever	Engine Start	Engine Run
Up	Neutral	Released	Starts	Continue running
Up	Neutral	Pulled in	Starts	Continue running
Up	In Gear	Released	Doesn't start	Continue running
Up	In Gear	Pulled in	Starts	Continue running
Down	Neutral	Released	Starts	Continue running
Down	Neutral	Pulled in	Starts	Continue running
Down	In Gear	Released	Doesn't start	Stops
Down	In Gear	Pulled in	Doesn't start	Stops

★If the sidestand switch operation does not work, inspect or replace the following item.
Battery (see Charging Condition Inspection in the Electrical System chapter)
Main Fuse 30 A (see Fuse Inspection in the Electrical System chapter)
Ignition Fuse 10 A (see Fuse Inspection in the Electrical System chapter)
Ignition Switch (see Switch Inspection in the Electrical System chapter)
Sidestand Switch (see Switch Inspection in the Electrical System chapter)
Engine Stop Switch (see Switch Inspection in the Electrical System chapter)
Starter Button (see Switch Inspection in the Electrical System chapter)
Neutral Switch (see Switch Inspection in the Electrical System chapter)
Starter Relay (see Starter Relay Inspection in the Electrical System chapter)
Relay Box (see Relay Circuit Inspection in the Electrical System chapter)
Starter Circuit Relay (see Relay Circuit Inspection in the Electrical System chapter)
Harness (see Wiring Inspection in the Electrical System chapter)

★If the all parts are good condition, replace the ECU (see ECU Removal/Installation in the Fuel System (DFI) chapter).

Periodic Maintenance Procedures

Engine Stop Switch Operation Inspection

First Step

- Turn on the ignition switch.
- Set the neutral position.
- Turn the engine stop switch to stop position [A].
- Push the starter button.
- The engine does not start.

★If the engine starts, inspect or replace the following item.
Engine Stop Switch (see Switch Inspection in the Electrical System chapter)

Second Step

- Turn on the ignition switch.
- Set the neutral position.
- Turn the engine stop switch to run position [A].
- Push the starter button and run the engine.
- Turn the engine stop switch to stop position.
- Immediately the engine should be stop.

★If the engine does not stop, inspect or replace the following item.
Engine Stop Switch (see Switch Inspection in the Electrical System chapter)

Others

Chassis Parts Lubrication

- Before lubricating each part, clean off any rusty spots with rust remover and wipe off any grease, oil, dirt, or grime.
- Lubricate the points listed below with indicated lubricant.

NOTE

○*Whenever the vehicle has been operated under wet or rainy conditions, or especially after using a high-pressure water spray, perform the general lubrication.*

Pivots: Lubricate with Grease.

Brake Lever
Brake Pedal
Clutch Lever
Rear Brake Joint Pin
Sidestand

Points: Lubricate with Grease.

Clutch Inner Cable Upper and Lower Ends [A]
Throttle Inner Cable Upper and Lower Ends

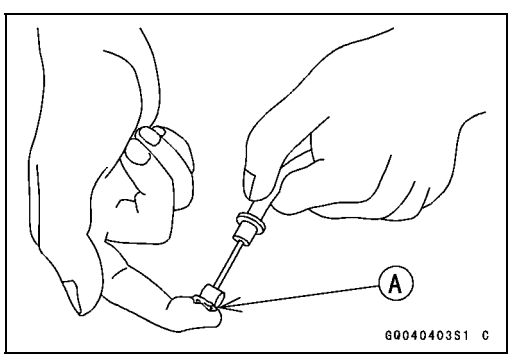

Periodic Maintenance Procedures

Cables: Lubricate with Rust Inhibitor.
Clutch Cable
Throttle Cables

- Lubricate the cables by seeping the oil between the cable and housing.

○The cable may be lubricated by using a commercially available pressure cable lubricator with an aerosol cable lubricant.

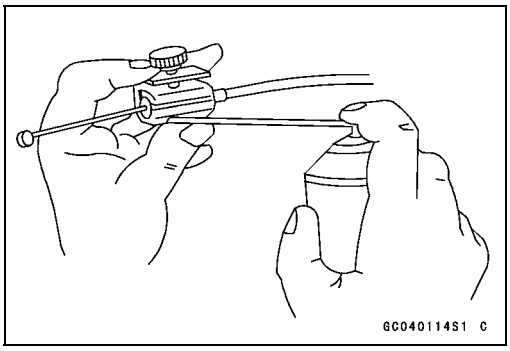

- With the cable disconnected at both ends, the cable should move freely [A] within the cable housing.

★If cable movement is not free after lubricating, if the cable is frayed [B], or if the cable housing is kinked [C], replace the cable.

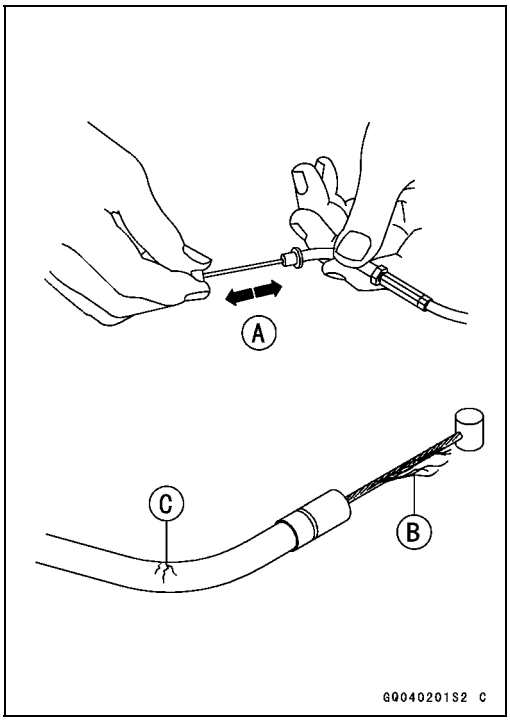

Periodic Maintenance Procedures

Bolts, Nuts and Fasteners Tightness Inspection

● Check the tightness of the bolts and nuts listed here. Also, check to see that each cotter pin is in place and in good condition.

NOTE

○*For the engine fasteners, check the tightness of them when the engine is cold (at room temperature).*

★If there are loose fasteners, retighten them to the specified torque following the specified tightening sequence. Refer to the appropriate chapter for torque specifications. If torque specifications are not in the appropriate chapter, see the Standard Torque Table. For each fastener, first loosen it by 1/2 turn, then tighten it.

★If cotter pins are damaged, replace them with new ones.

Bolt, Nut and Fastener to be checked

Engine:
- Clutch Lever Pivot Bolt Locknut
- Engine Mounting Bolts and Nuts
- Exhaust Pipe Manifold Holder Nuts
- Muffler Body Clamp Bolt
- Muffler Body Mounting Bolt and Nut
- Radiator Upper and Lower Bolts
- Subframe Bolts

Wheels:
- Front Axle
- Front Axle Clamp Bolt
- Rear Axle Nut
- Rear Axle Nut Cotter Pin

Brakes:
- Brake Lever Pivot Nut
- Brake Pedal Bolt
- Brake Rod Joint Cotter Pin
- Caliper Mounting Bolts
- Front Master Cylinder Clamp Bolts
- Rear Caliper Pin Bolt
- Rear Master Cylinder Mounting Bolts

Suspension:
- Front Fork Clamp Bolts
- Rear Shock Absorber Nuts
- Swingarm Pivot Shaft Locknut
- Swingarm Pivot Shaft Nut
- Tie-Rod Nuts
- Uni-Trak Rocker Arm Nut

Steering:
- Handlebar Holder Bolts
- Steering Stem Head Bolt

Others:
- Footpeg Bracket Bolts
- Front Fender Bolts
- Sidestand Bolt

Replacement Parts

Air Cleaner Element Replacement

NOTE

○*In dusty areas, the element should be replaced more frequently than the recommended interval.*
○*After riding through rain or on muddily roads, the element should be replaced immediately.*

⚠ WARNING

If dirt or dust is allowed to pass through into the throttle assy, the throttle may become stuck, possibly causing accident. Replace the air cleaner element according to the maintenance chart.

NOTICE

If dirt gets through into the engine, excessive engine wear and possibly engine damage will occur.

- Remove:
  Fuel Tank (see Fuel Tank Removal in the Fuel System (DFI) chapter)
  Bolts [A]
  Fuel Tank Bracket [B]

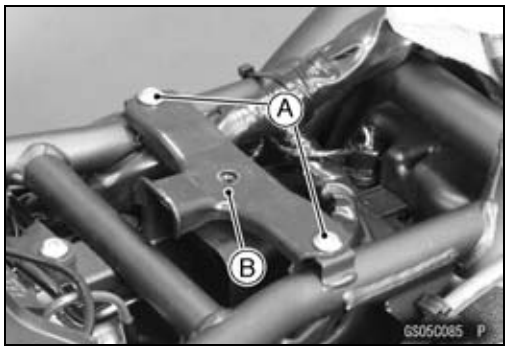

- Cut the band [A].
- Remove the intake air temperature sensor [B].
- Remove the air cleaner duct screws [C].
- Remove the air cleaner duct [D] backward.

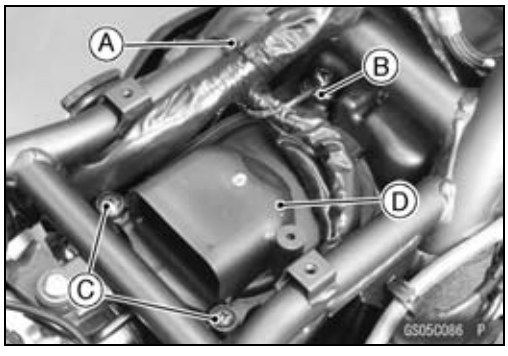

- Discard the air cleaner element [A].

Periodic Maintenance Procedures

- Install a new element [A] so that flat side [B] faces forward.

- Fit the tongue [A] of the air cleaner duct into the slot [B] of the air cleaner housing.
- Tighten:

  Torque - Air Cleaner Duct Screws: 3.8 N·m (0.39 kgf·m, 34 in·lb)

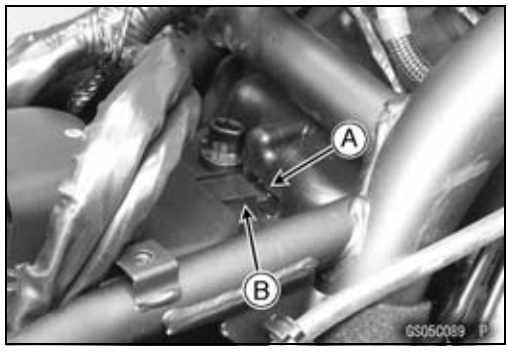

Fuel Hose Replacement

⚠ WARNING

Fuel is flammable and explosive under certain conditions and can cause severe burns. Be prepared for fuel spillage; any spilled fuel must be completely wiped up immediately. When the fuel hose is disconnected, fuel spills out from the hose and the pipe because of residual pressure. Cover the hose connection with a piece of clean cloth to prevent fuel spillage.

- Draw the fuel out from the fuel tank with a commercially available electric pump.
- Remove the fuel tank (see Fuel Tank Removal in the Fuel System (DFI) chapter).

○Be careful of fuel spillage from the fuel tank since fuel still remains in the fuel tank and fuel pump. Plug the fuel pipe of the fuel tank.

- Turn the fuel tank upside down.
- Be sure to place a piece of cloth [A] around the fuel intake hose [B].
- Remove:

  Clamps [C]

  Fuel Intake Hose

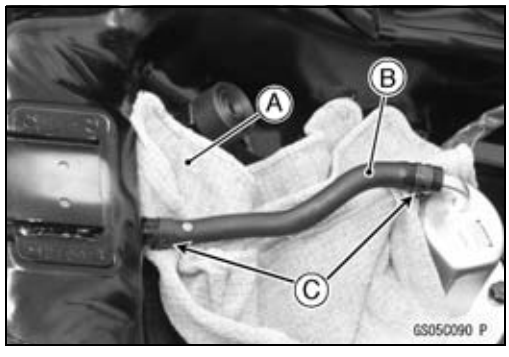

Periodic Maintenance Procedures

- Be sure to place a piece of cloth [A] around the fuel outlet hose joint.
- Push the joint lock claws [B].

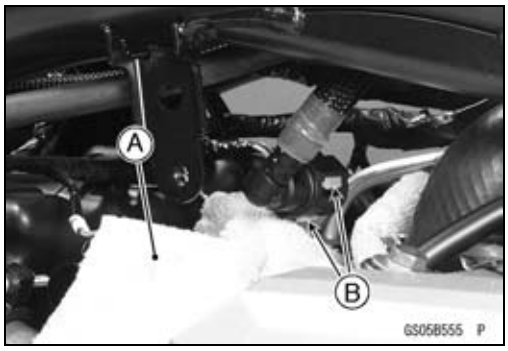

- Pull the joint lock [A] as shown in the figure.
- Pull the fuel outlet hose joint [B] out of the delivery pipe.

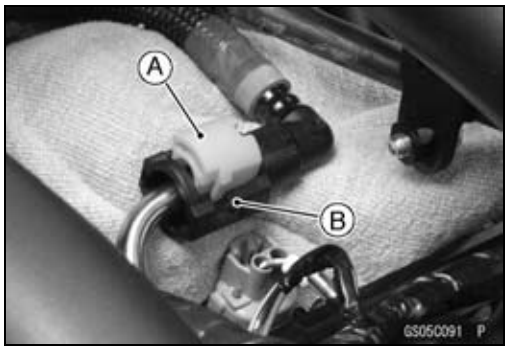

- Install a new fuel intake hose [A] so that the white mark side [B] faces outlet pipe [C] of the fuel tank.
  Fuel Pump [D]
  Bottom View [E]

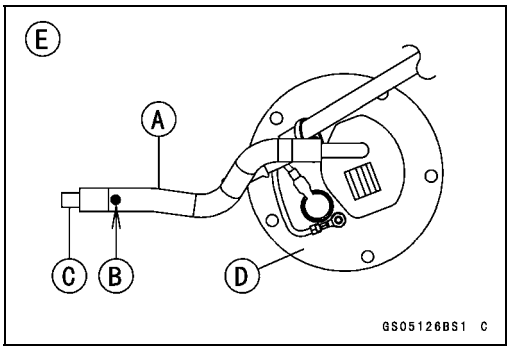

- Fix the both ends of the fuel intake hose [A] with the clamps [B] as shown in the figure.
  1 ~ 2 mm (0.039 ~ 0.079 in.) [C]

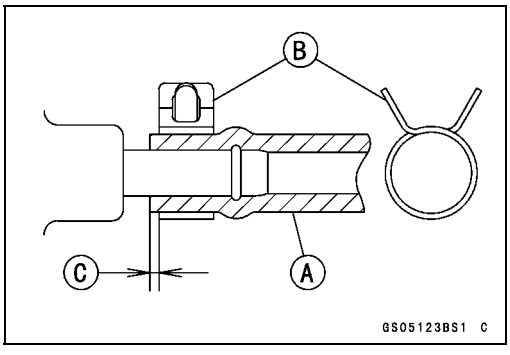

- Replace the fuel outlet hose with a new one.
- Pull [A] the joint lock [B] fully as shown in the figure.

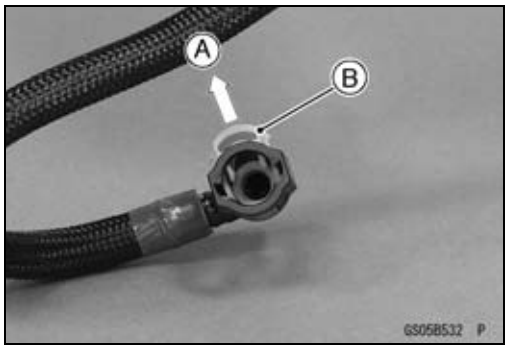

Periodic Maintenance Procedures

- Insert the fuel outlet hose joint [A] straight onto the delivery pipe until the hose joint clicks.
- Push [B] the joint lock [C] until the hose joint clicks.

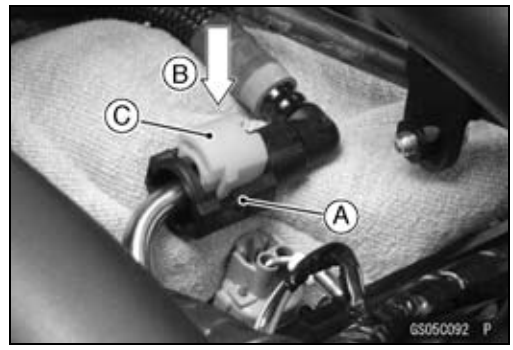

- Push and pull [A] the fuel hose joint [B] back and forth more than two times, and make sure it is locked and does not come off.

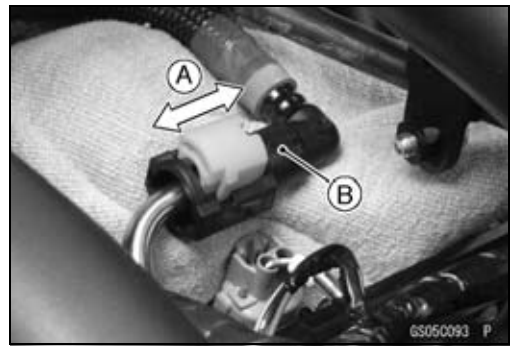

⚠ WARNING

Leaking fuel can cause a fire or explosion resulting in serious burns. Make sure the fuel hose joint is installed correctly on the fuel pump.

★If it comes off, reinstall the hose joint.
- Run the fuel outlet hose correctly (see Cable, Wire, and Hose Routing section in the Appendix chapter).
- Install the fuel tank (see Fuel Tank Installation in the Fuel System (DFI) chapter).
- Start the engine and check the fuel hose for leaks.

Coolant Change

⚠ WARNING

Coolant can be extremely hot and cause severe burns, is toxic and very slippery. Do not remove the radiator cap or attempt to change the coolant when the engine is hot; allow it cool completely. Immediately wipe any spilled coolant from tires, frame, engine or other painted parts. Do not ingest coolant.

- Place a container under the coolant drain bolt [A], then remove the drain bolt.

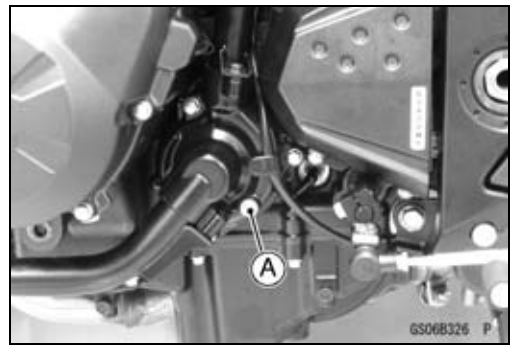

Periodic Maintenance Procedures

- Remove the fuel tank (see Fuel Tank Removal in the Fuel System (DFI) chapter).
- Remove the radiator cap [A] in two steps. First turn the cap counterclockwise to the first stop. Then push and turn it further in the same direction and remove the cap.

○The coolant will drain from the radiator and engine.

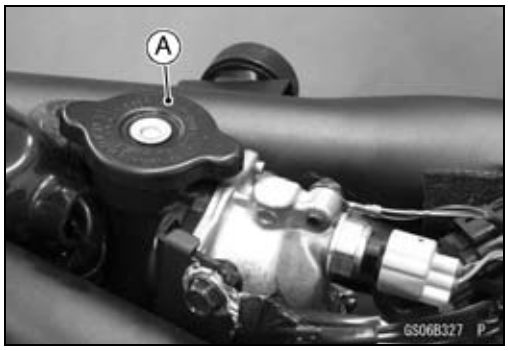

- Remove:
  Right Seat Cover (see Seat Cover Removal in the Frame chapter)
  Hose [A]
  Reserve Tank Bolts [B]
- Turn over the reserve tank, remove the cap, and pour the coolant into a suitable container.
- Install the reserve tank.
- Tighten:

Torque - Reserve Tank Bolts: 9.8 N·m (1.0 kgf·m, 87 in·lb)

- Tighten the drain bolt with the gasket.

○Replace the drain bolt gasket with a new one.

Torque - Coolant Drain Bolt (Water Pump): 11 N·m (1.1 kgf·m, 97 in·lb)

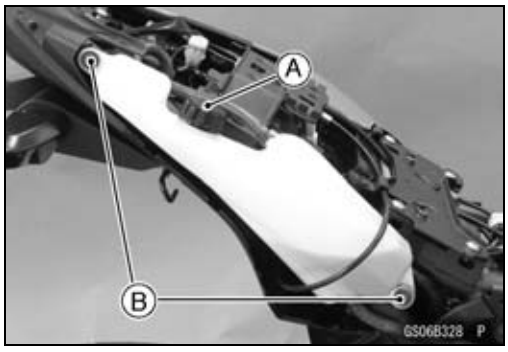

- When filling the coolant, choose a suitable mixture ratio by referring to the coolant manufacturer's directions.

NOTICE

Soft or distilled water must be used with the antifreeze in the cooling system.
If hard water is used in the system, it causes scales accumulation in the water passages, and considerably reduces the efficiency of the cooling system.

Water and Coolant Mixture Ratio (Recommended)

Soft Water:	**50%**
Coolant:	**50%**
Freezing Point:	**–35°C (–31°F)**
Total Amount:	**2.9 L (3.1 US qt)**

- Fill the radiator up to the filler neck [A] with coolant.

NOTE

○*Pour in the coolant slowly so that it can expel the air from the engine and radiator.*

- Check the cooling system for leaks.
- Tap the radiator hoses to force any air bubbles caught inside.
- Fill the radiator up to the filler neck with coolant.

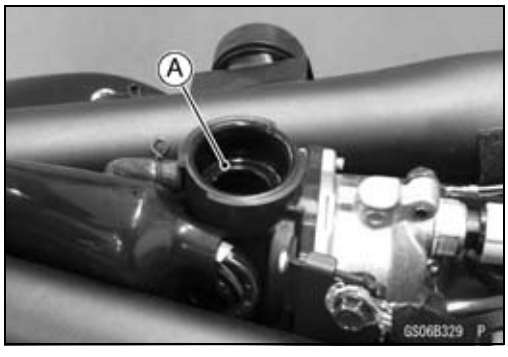

Periodic Maintenance Procedures

- Fill the reserve tank up to the “F” (full) level line [A] with coolant and install the cap [B].
- Install the fuel tank (see Fuel Tank Installation in the Fuel System (DFI) chapter).
- Start the engine, warm it up thoroughly until the radiator fan turns on and then stop the engine.
- Check the coolant level in the reserve tank after the engine cools down.

★If the coolant level is lower than the “L” (low) level line [C], add coolant to the “F” level line.

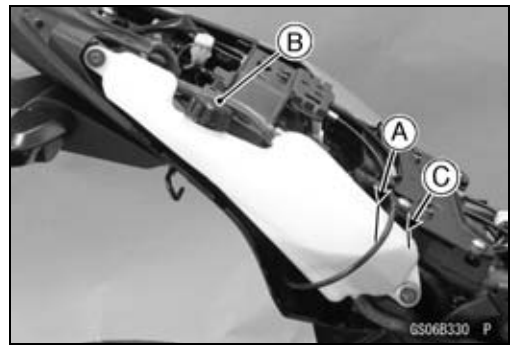

NOTICE
Do not add more coolant above the “F” level line.

Radiator Hose and O-ring Replacement

- Drain the coolant (see Coolant Change).
- Remove:
  Thermostat Housing [A] (see Thermostat Removal in the Cooling System chapter)
  Water Pump Cover [B] (see Water Pump Removal in the Cooling System chapter)
  O-rings [C]
  Hoses [D]
- Apply grease to the new O-rings and install them.
- Install the new hoses and tighten the clamps securely.

  Torque - Radiator (Water) Hose Clamp Screws: 3.0 N·m (0.31 kgf·m, 27 in·lb)
- Fill the coolant (see Coolant Change).
- Check the cooling system for leaks.

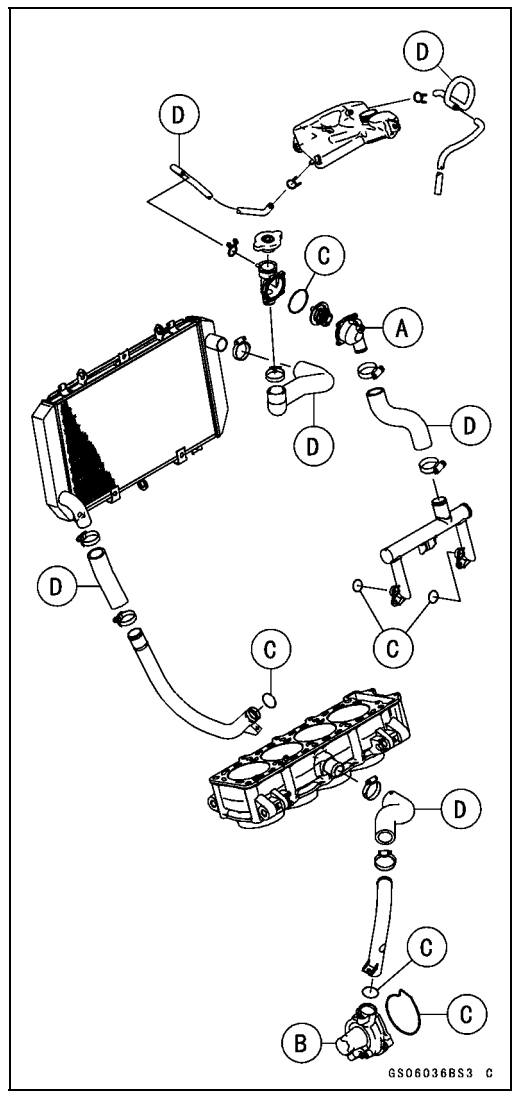

Engine Oil Change

- Situate the motorcycle so that it is vertical after warming up the engine.
- Remove the engine oil drain bolt [A] to drain the oil.

○The oil in the oil filter can be drained by removing the filter (see Oil Filter Replacement).

- Replace the drain bolt gasket [B] with a new one.
- Tighten the drain bolt.

  Torque - Engine Oil Drain Bolt: 29 N·m (3.0 kgf·m, 21 ft·lb)
- Pour in the specified type and amount of oil.

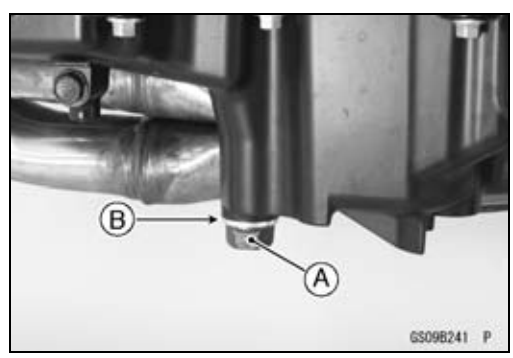

Periodic Maintenance Procedures

Recommended Engine Oil

Type:	**API SG, SH, SJ, SL or SM with JASO MA, MA1 or MA2**
Viscosity:	**SAE 10W-40**
Capacity:	**3.1 L (3.3 US qt) (when filter is not removed)**
	3.3 L (3.5 US qt) (when filter is removed)
	3.8 L (4.0 US qt) (when engine is completely dry)

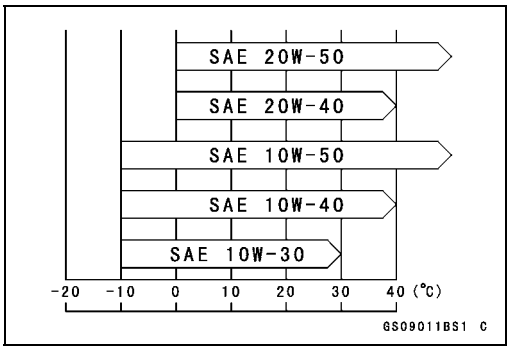

NOTE

○*Do not add any chemical additive to the oil. Oils fulfilling the above requirements are fully formulated and provide adequate lubrication for both the engine and the clutch.*

○*Although 10W-40 engine oil is the recommended oil for most conditions, the oil viscosity may need to be changed to accommodate atmospheric conditions in your riding area.*

- Check the oil level (see Oil Level Inspection in the Engine Lubrication System chapter).

Oil Filter Replacement

- Drain the engine oil (see Engine Oil Change).
- Remove the oil filter [A] with the oil filter wrench [B].

Special Tool - Oil Filter Wrench: 57001-1249

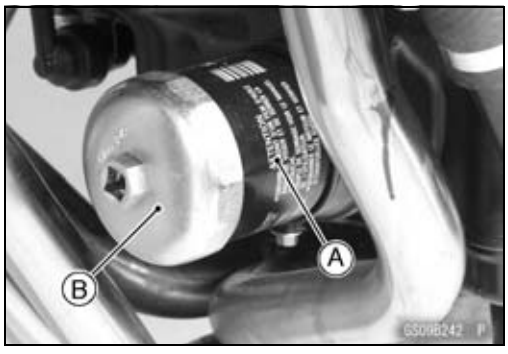

- Replace the filter with a new one.
- Apply grease to the gasket [A] before installation.
- Tighten the filter with the oil filter wrench.

Torque - Oil Filter: 17 N·m (1.7 kgf·m, 13 ft·lb)

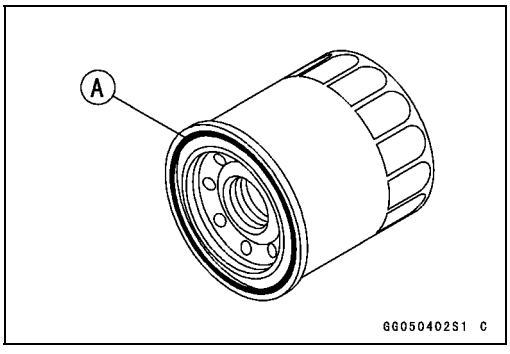

NOTE

○*Hand tightening of the oil filter can not be allowed since it does not reach to this tightening torque.*

- Pour in the specified type and amount of oil (see Engine Oil Change).

Periodic Maintenance Procedures

Brake Hose and Pipe Replacement

NOTICE

Brake fluid quickly ruins painted plastic surfaces; any spilled fluid should be completely washed away immediately.

- Remove the brake hose banjo bolts [A].
- When removing the brake hose, take care not to spill the brake fluid on the painted or plastic parts.
- When removing the brake hoses [B], temporarily secure the end of the brake hose to some high place to keep fluid loss to a minimum.
- Immediately wash away any brake fluid that spills.

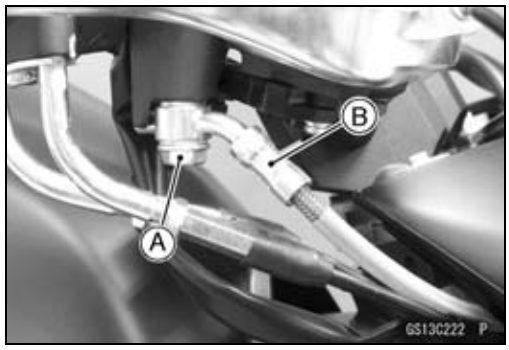

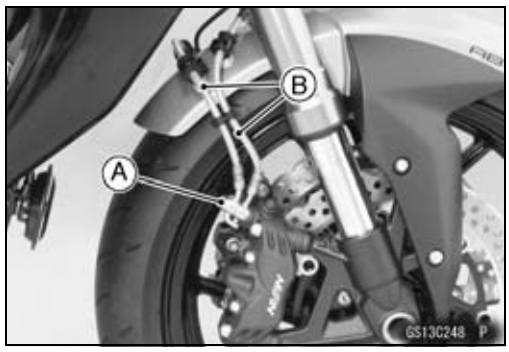

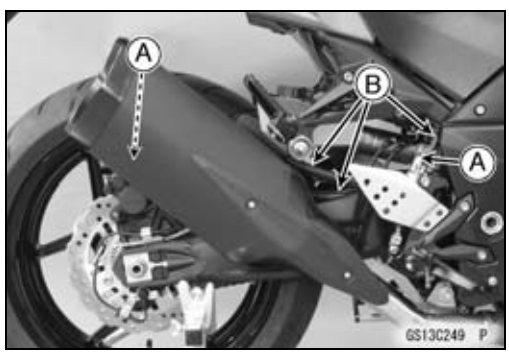

Periodic Maintenance Procedures

- For ABS equipped models; note the following.
- Remove:
  Fuel Tank (see Fuel Tank Removal in the Fuel System (DFI) chapter)
  Rear Fender (see Flap and Rear Fender Removal in the Frame chapter)
  ABS Hydraulic Unit (see ABS Hydraulic Unit Removal in the Brakes chapter)
  Brake Pipe Joint Nuts [A] (using the Flare Nut Wrench)
  Bolts [B]
  Brackets [C]
- There are washers on each side of the brake hose fitting and unit side. Replace them with new ones when installing.
- Before installing the brake pipe, check to see that there is no damage on the threads of the brake pipe joint nut.

★If there is any damage, replace the damaged parts with new ones.

NOTE

○*Tighten the brake pipe joint nuts at both ends of the brake pipe temporarily and then tighten them to the specified torque.*

- Tighten the brake pipe joint nuts with the flare nut wrench.

Torque - Brake Hose Banjo Bolts: 25 N·m (2.5 kgf·m, 18 ft·lb)
Brake Pipe Joint Nuts (ABS Equipped Models): 18 N·m (1.8 kgf·m, 13 ft·lb)

- When installing the hoses, avoid sharp bending, kinking, flatting or twisting, and run the hoses according to Cable, Wire, and Hose Routing section in the Appendix chapter.
- Fill the brake line after installing the brake hose (see Brake Fluid Change).

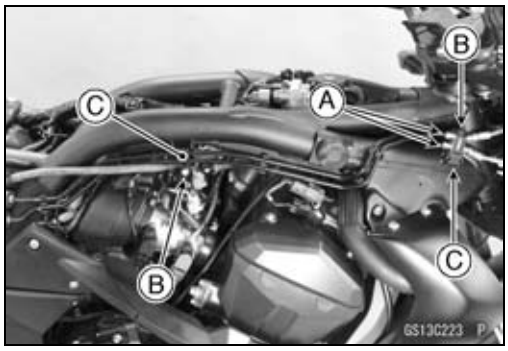

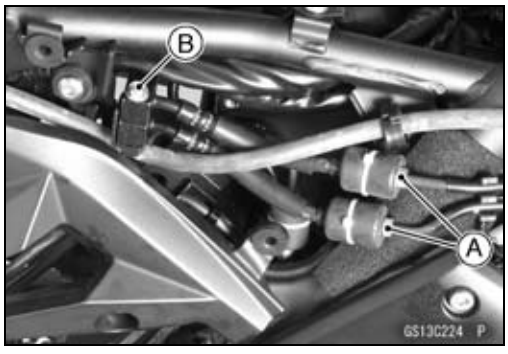

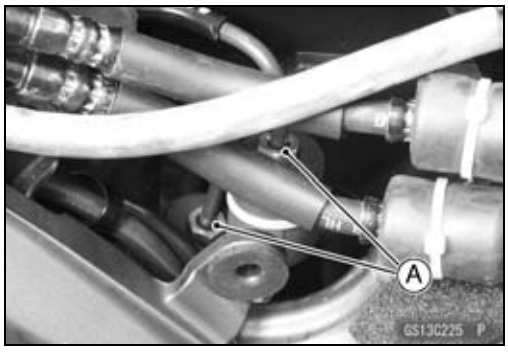

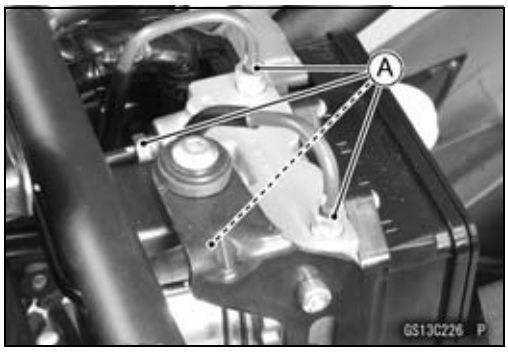

Periodic Maintenance Procedures

Brake Fluid Change

NOTE

○*The procedure to change the front brake fluid is as follows. Changing the rear brake fluid is the same as for the front brake.*

- Level the brake fluid reservoir.
- Remove the reservoir cap.
- Remove the rubber cap from the bleed valve [A] on the caliper.
- Attach a clear plastic hose [B] to the bleed valve, and run the other end of the hose into a container.
- Fill the reservoir with fresh specified brake fluid.

- Change the brake fluid.

○Repeat this operation until fresh brake fluid comes out from the plastic hose or the color of the fluid changes.

1. Open the bleed valve [A].
2. Apply the brake and hold it [B].
3. Close the bleed valve [C].
4. Release the brake [D].

NOTE

○*The fluid level must be checked often during the changing operation and replenished with fresh brake fluid. If the fluid in the reservoir runs out any time during the changing operation, the brakes will need to be bled since air will have entered the brake line.*

○*Front Brake: Repeat the above steps for the other caliper.*

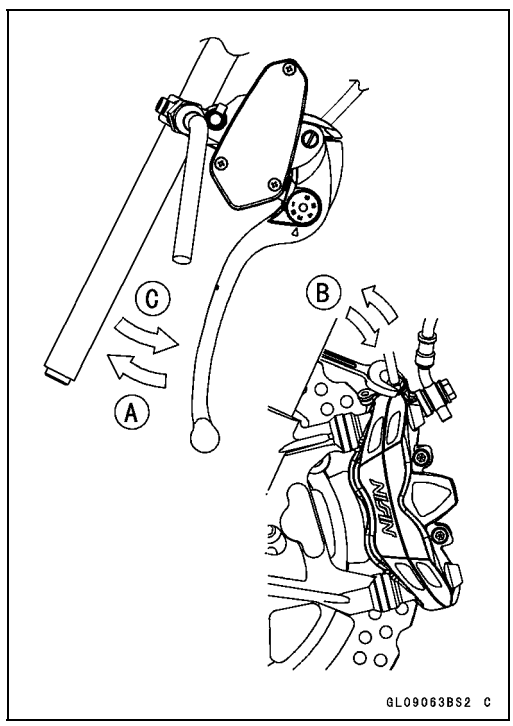

- Follow the procedure below to install the front/rear brake fluid reservoir cap correctly.

○First, tighten the front/rear brake fluid reservoir cap [B] clockwise [C] by hand until slight resistance is felt indicating that the cap is seated on the reservoir body, then tighten the cap an additional 1/6 turn [D] while holding the brake fluid reservoir body [A].

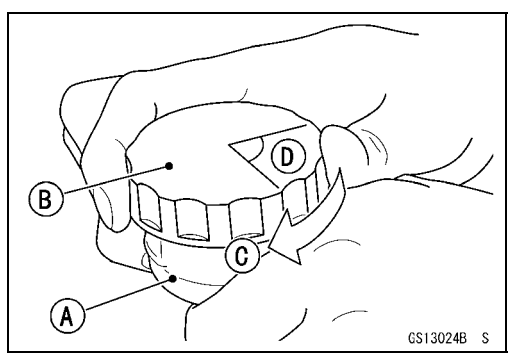

- Tighten the bleed valve, and install the rubber cap.

  Torque - Bleed Valves: 7.8 N·m (0.80 kgf·m, 69 in·lb)

- After changing the fluid, check the brake for good braking power, no brake drag, and no fluid leakage.

★If necessary, bleed the air from the lines.

Master Cylinder Rubber Parts Replacement

Front Master Cylinder Disassembly

- Remove the front master cylinder (see Front Master Cylinder Removal in the Brakes chapter).
- Remove:
  Screws [A]
  Cap [B]
  Diaphragm Plate [C]
  Diaphragm [D]
  Float [E]
  Screw [F]
  Bolt [G]
- Pull out the fluid reservoir [H] and O-rings [I].
- Unscrew the locknut [J] and pivot bolt [K], and remove the brake lever.
- Remove the circlip [L].

  Special Tool - Inside Circlip Pliers: 57001-143
- Pull out the piston assy [M].
- Replace:
  Diaphragm [D]
  O-ring [I]
  Circlip [L]
  Piston Assy [M]

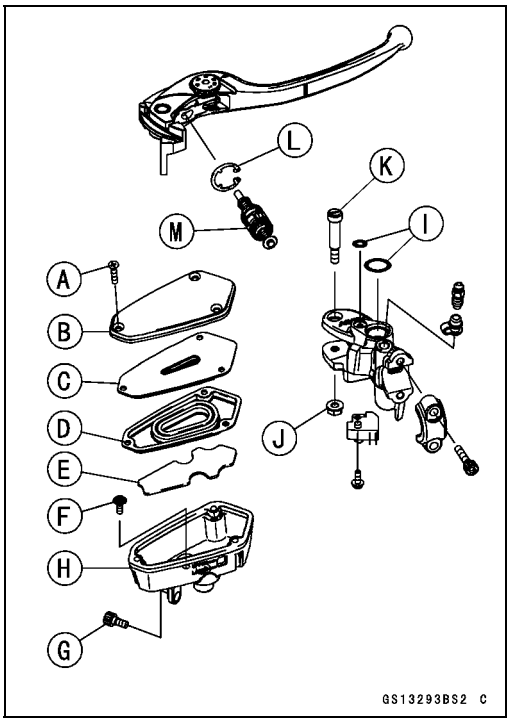

Rear Master Cylinder Disassembly

- Remove the rear master cylinder (see Rear Master Cylinder Removal in the Brakes chapter).
- Remove the circlip [A], connector [B] and O-ring [C].

  Special Tool - Inside Circlip Pliers: 57001-143
- Slide the dust cover [D] out of place, and remove the circlip [E].
- Pull out the push rod assy [F].
- Take off the piston assy [G] and return spring [H].

NOTICE

Do not remove the secondary cup from the piston since removal will damage it.

- Replace:
  Circlip [A]
  O-ring [C]
  Circlip [E]
  Push Rod Assy [F]
  Piston Assy [G]
  Diaphragm [I]

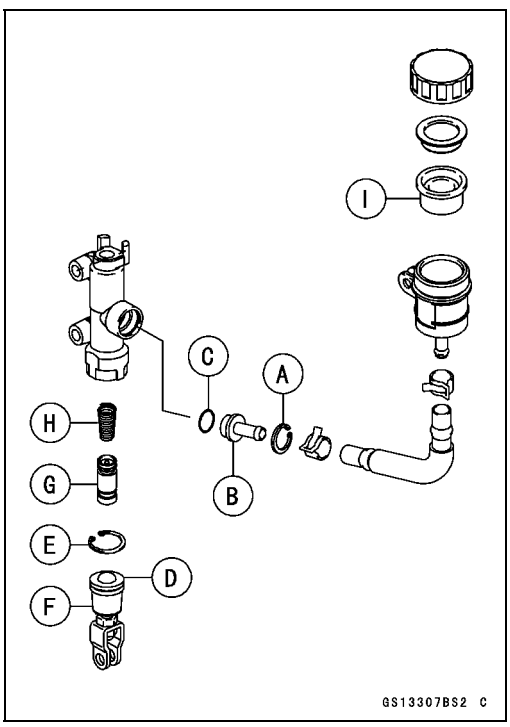

Periodic Maintenance Procedures

Master Cylinder Assembly

- Before assembly, clean all parts including the master cylinder with brake fluid or alcohol.

NOTICE

Except for the disc pads and disc, use only disc brake fluid, isopropyl alcohol, or ethyl alcohol for cleaning brake parts. Do not use any other fluid for cleaning these parts. Gasoline, engine oil, or any other petroleum distillate will cause deterioration of the rubber parts. Oil spilled on any part will be difficult to wash off completely, and will eventually deteriorate the rubber used in the disc brake.

- Apply brake fluid to the new parts and to the inner wall of the cylinder.
- Take care not to scratch the piston or the inner wall of the cylinder.
- Apply silicone grease to the brake lever pivot bolt.
- Tighten the brake lever pivot bolt and the locknut.

Torque - Brake Lever Pivot Bolt: 1.0 N·m (0.10 kgf·m, 9 in·lb)
Brake Lever Pivot Bolt Locknut: 5.9 N·m (0.60 kgf·m, 52 in·lb)

Caliper Rubber Parts Replacement

Front Caliper Disassembly

- Loosen the front caliper pad pins [A] and banjo bolt [B] and tighten them loosely.
- Remove:
  Front Caliper [C] (see Front Caliper Removal in the Brakes chapter)
  Brake Pads (see Front Brake Pad Removal in the brakes chapter)
  Front Caliper Assembly Bolts
  O-ring

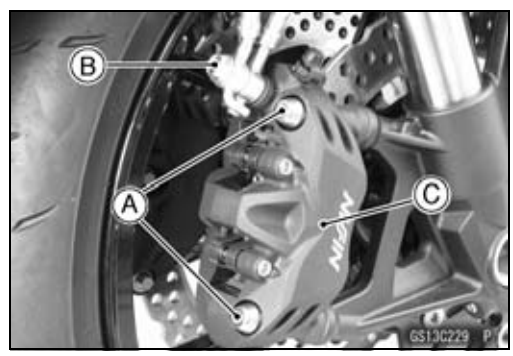

- Using compressed air, remove the pistons. One way to remove the pistons is as follows.

○Install a rubber gasket [A] and a wooden board [B] more than 10 mm (0.4 in.) thick on the caliper half, and fasten them together with a suitable bolt and nut as shown. Leave one of the oil passages [C] open.

○Lightly apply compressed air [D] to the oil passage until the pistons hit the rubber gasket. Block the hose joint opening [E] during this operation if the caliper half has the opening.
  Bolt [F] and Nut
  Push down [G].

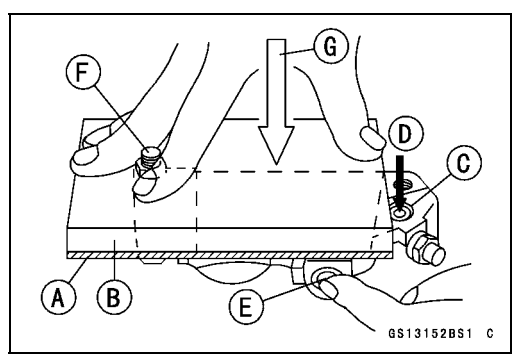

Periodic Maintenance Procedures

⚠ WARNING

The piston in the brake caliper can crush hands and fingers. Never place your hand or fingers in front of the piston.

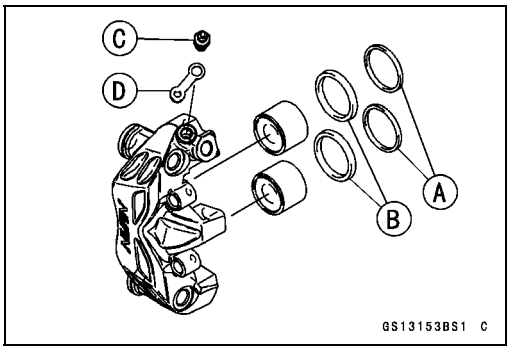

○Pull out the pistons by hand.
- Remove the dust seals [A] and fluid seals [B].
- Remove the bleed valve [C] and rubber cap [D].
- Repeat the previous step to remove the pistons from the other side of the caliper body.

NOTE

○*If compressed air is not available, do as follows for both calipers coincidentally, with the brake hose connected to the caliper.*
○*Prepare a container for brake fluid, and perform the work above it.*
○*Remove the pad springs and pads (see Front Brake Pad Removal in the Brakes chapter).*
○*Pump the brake lever until the pistons come out of the cylinders, and then disassemble the caliper.*

Front Caliper Assembly
- Clean the caliper parts except for the pads.

NOTICE

For cleaning the parts, use only disc brake fluid, isopropyl alcohol, or ethyl alcohol.

- Install the bleed valve and rubber cap.

Torque - Bleed Valves: 7.8 N·m (0.80 kgf·m, 69 in·lb)

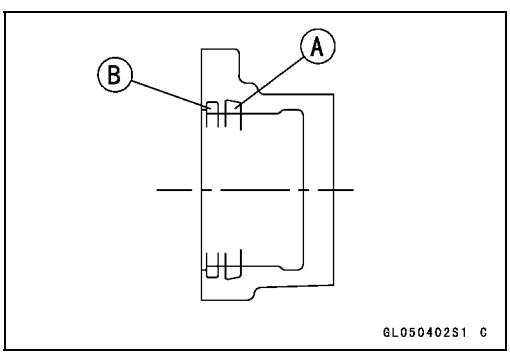

- Replace the fluid seals [A] with new ones.
○Apply silicone grease to the fluid seals, and install them into the cylinders by hand.
- Replace the dust seals [B] with new ones if they are damaged.
○Apply silicone grease to the dust seals, and install them into the cylinders by hand.

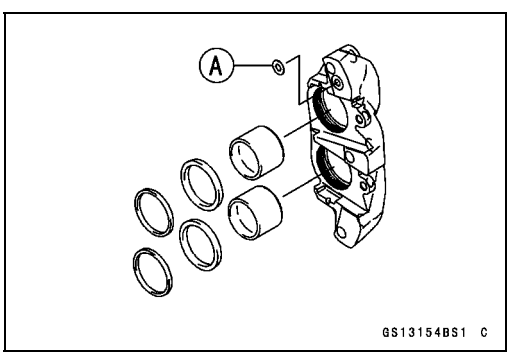

- Replace the O-ring [A].
- Apply brake fluid to the outside of the pistons, and push them into each cylinder by hand.
- Be sure to install the O-ring.
- Apply a non-permanent locking agent to the threads of the front caliper assembly bolts, and tighten them.

Torque - Front Caliper Assembly Bolts: 27 N·m (2.8 kgf·m, 20 ft·lb)

- Install the pads (see Front Brake Pad Installation in the Brakes chapter).
- Wipe up any spilled brake fluid on the caliper with wet cloth.

Periodic Maintenance Procedures

Rear Caliper Disassembly

● Remove:
Rear Caliper (see Rear Caliper Removal in the Brakes chapter)
Brake Pads (see Rear Brake Pad Removal in the Brakes chapter)

● Using compressed air, remove the piston.
○Cover the piston area with a wooden board [A].
○Blow compressed air [B] into the hole for the banjo bolt to remove the piston.

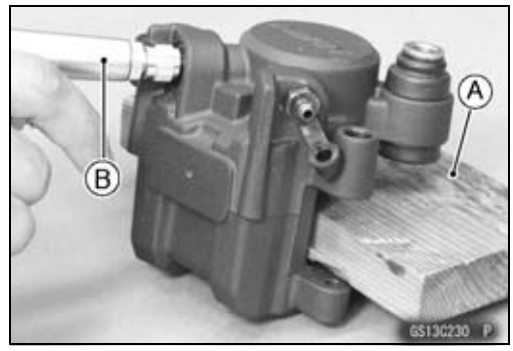

⚠ WARNING

The piston in the brake caliper can crush hands and fingers. Never place your hand or fingers in front of the piston.

● Remove:
Dust Seal [A] and Fluid Seal [B]
Bleed Valve [C] and Rubber Cap [D]
Pad Spring [E]
Rubber Boot [F]
Sleeve [G]

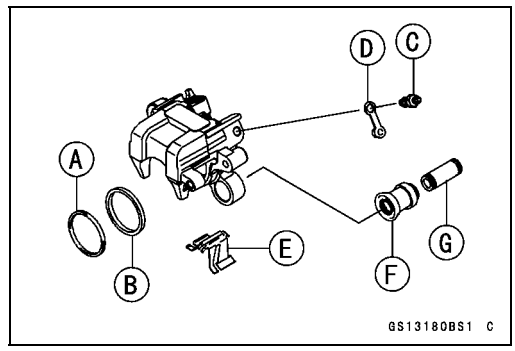

NOTE

○*If compressed air is not available, do as follows with the brake hose connected to the caliper.*
○*Prepare a container for brake fluid, and perform the work above it.*
○*Remove the pads (see Rear Brake Pad Removal in the Brakes chapter).*
○*Pump the brake pedal to remove the caliper piston.*

Rear Caliper Assembly

● Clean the caliper parts except for the pads.

NOTICE

For cleaning the parts, use only disc brake fluid, isopropyl alcohol, or ethyl alcohol.

● Install the bleed valve and rubber cap.

Torque - Bleed Valves: 7.8 N·m (0.80 kgf·m, 69 in·lb)

- Apply brake fluid to the cylinder bore.
- Replace the fluid seal [A] with a new one.
  ○Apply silicone grease to the fluid seal, and install it into the cylinder by hand.
- Replace the dust seal [B] with a new one if it is damaged.

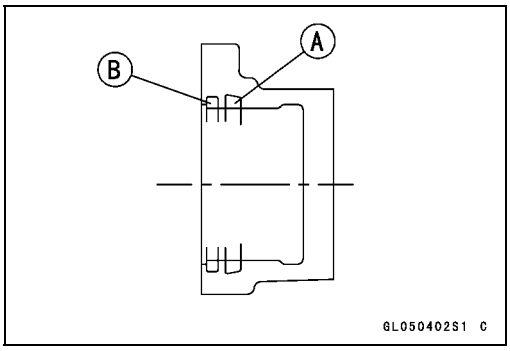

- Install the pad spring [A].
- Apply silicone grease to the sleeve [B].
- Install the rubber boot [C] and sleeve.

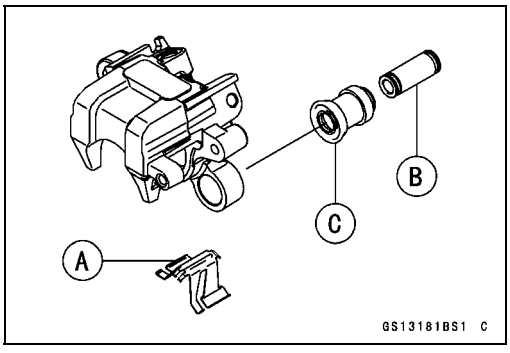

- Install the pads (see Rear Brake Pad Installation in the Brakes chapter).
- Wipe up any spilled brake fluid on the caliper with wet cloth.

Spark Plug Replacement

- Remove the stick coils (see Stick Coil Removal in the Electrical System chapter).
- Remove the spark plugs using the 16 mm (0.63 in.) plug wrench [A] vertically.

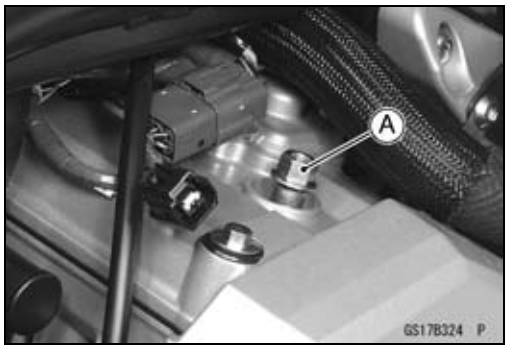

- Replace the spark plug with a new one.

Standard Spark Plug
Type: NGK CR9EK

- Insert the new spark plug in the plug hole, and finger -tighten it first.
- Using the plug wrench [A] vertically, tighten the plug.

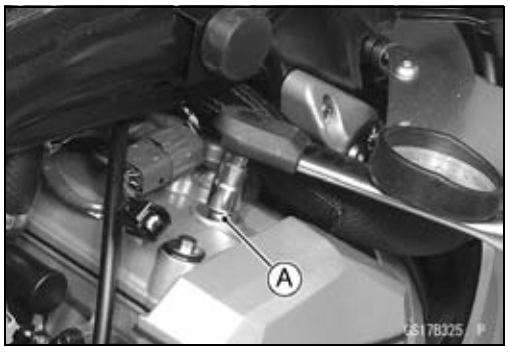

NOTICE

The insulator of the spark plug may break if when the wrench is inclined during tightening.

Torque - Spark Plugs: 13 N·m (1.3 kgf·m, 115 in·lb)

- Install the stick coils securely.
  ○Be sure the stick coils are installed by pulling up it lightly.

Fuel System (DFI)

Table of Contents

Exploded View 3-4
DFI System 3-10
DFI Parts Location 3-16
Specifications 3-18
Special Tools and Sealant 3-20
DFI Servicing Precautions 3-22
  DFI Servicing Precautions 3-22
Troubleshooting the DFI System 3-24
  Outline 3-24
  Inquiries to Rider 3-28
DFI System Troubleshooting Guide 3-31
Self-Diagnosis 3-36
  Self-diagnosis Outline 3-36
  Self-diagnosis Procedures 3-37
    Service Code Reading 3-40
    Service Code Erasing 3-40
  Backups 3-42
Main Throttle Sensor (Service Code 11) 3-45
    Main Throttle Sensor Removal/Adjustment 3-45
    Main Throttle Sensor Input Voltage Inspection 3-45
    Main Throttle Sensor Output Voltage Inspection 3-46
    Main Throttle Sensor Resistance Inspection 3-47
Intake Air Pressure Sensor (Service Code 12) 3-49
    Intake Air Pressure Sensor Removal 3-49
    Intake Air Pressure Sensor Installation 3-49
    Intake Air Pressure Sensor Input Voltage Inspection 3-49
    Intake Air Pressure Sensor Output Voltage Inspection 3-50
Intake Air Temperature Sensor (Service Code 13) 3-54
    Intake Air Temperature Sensor Removal/Installation 3-54
    Intake Air Temperature Sensor Output Voltage Inspection 3-54
    Intake Air Temperature Sensor Resistance Inspection 3-55
Water Temperature Sensor (Service Code 14) 3-57
    Water Temperature Sensor Removal/Installation 3-57
    Water Temperature Sensor Output Voltage Inspection 3-57
    Water Temperature Sensor Resistance Inspection 3-58
Atmospheric Pressure Sensor (Service Code 15) 3-59
    Atmospheric Pressure Sensor Removal 3-59
    Atmospheric Pressure Sensor Installation 3-59
    Atmospheric Pressure Sensor Input Voltage Inspection 3-59
    Atmospheric Pressure Sensor Output Voltage Inspection 3-60
Crankshaft Sensor (Service Code 21) 3-64
    Crankshaft Sensor Removal/Installation 3-64
    Crankshaft Sensor Resistance Inspection 3-64
    Crankshaft Sensor Peak Voltage Inspection 3-64
Camshaft Position Sensor (Service Code 23) 3-65
    Camshaft Position Sensor Removal/Installation 3-65
    Camshaft Position Sensor Resistance Inspection 3-65
    Camshaft Position Sensor Peak Voltage Inspection 3-65
Speed Sensor (Service Code 24, 25) 3-67
    Speed Sensor Removal/Installation 3-67

Speed Sensor Input Voltage Inspection 3-67
Speed Sensor Output Voltage Inspection 3-68
Vehicle-down Sensor (Service Code 31) 3-70
Vehicle-down Sensor Removal 3-70
Vehicle-down Sensor Installation 3-70
Vehicle-down Sensor Input Voltage Inspection 3-71
Vehicle-down Sensor Output Voltage Inspection 3-72
Subthrottle Sensor (Service Code 32) 3-74
Subthrottle Sensor Removal/Adjustment 3-74
Subthrottle Sensor Input Voltage Inspection 3-74
Subthrottle Sensor Output Voltage Inspection 3-75
Subthrottle Sensor Resistance Inspection 3-77
Oxygen Sensor - not activated (Service Code 33) 3-78
Oxygen Sensor Removal/Installation 3-78
Oxygen Sensor Inspection 3-78
Exhaust Butterfly Valve Actuator Sensor (Service Code 34) 3-82
Exhaust Butterfly Valve Actuator Sensor Removal/Installation 3-82
Exhaust Butterfly Valve Actuator Sensor Input Voltage Inspection 3-82
Exhaust Butterfly Valve Actuator Sensor Output Voltage Inspection 3-83
Exhaust Butterfly Valve Actuator Sensor Resistance Inspection 3-84
Immobilizer Amplifier (Service Code 35) 3-85
Antenna Resistance Inspection 3-85
Amplifier Input Voltage Inspection 3-85
Blank Key Detection (Service Code 36) 3-86
Ignition Key Inspection 3-86
ECU Communication Error (Service Code 39) 3-87
ECU Communication Line Inspection 3-87
Stick Coils #1, #2, #3, #4 (Service Code 51, 52, 53, 54) 3-88
Stick Coil Removal/Installation 3-88
Stick Coil Primary Winding Resistance Inspection 3-88
Stick Coil Input Voltage Inspection 3-88
Radiator Fan Relay (Service Code 56) 3-90
Radiator Fan Relay Removal/Installation 3-90
Radiator Fan Relay Inspection 3-90
Subthrottle Valve Actuator (Service Code 62) 3-91
Subthrottle Valve Actuator Removal 3-91
Subthrottle Valve Actuator Inspection 3-91
Subthrottle Valve Actuator Resistance Inspection 3-91
Subthrottle Valve Actuator Input Voltage Inspection 3-92
Exhaust Butterfly Valve Actuator (Service Code 63) 3-94
Exhaust Butterfly Valve Actuator Removal 3-94
Exhaust Butterfly Valve Actuator Installation 3-95
Exhaust Butterfly Valve Actuator Inspection 3-97
Exhaust Butterfly Valve Actuator Resistance Inspection 3-97
Air Switching Valve (Service Code 64) 3-99
Air Switching Valve Removal/Installation 3-99
Air Switching Valve Inspection 3-99
Oxygen Sensor Heater (Service Code 67) 3-100
Oxygen Sensor Heater Removal/Installation 3-100
Oxygen Sensor Heater Resistance Inspection 3-100
Oxygen Sensor Heater Power Source Voltage Inspection 3-101
Oxygen Sensor - Incorrect Output Voltage (Service Code 94) 3-103
Oxygen Sensor Removal/Installation 3-103
Oxygen Sensor Inspection 3-103
Warning Indicator Light (LED) 3-107
Light (LED) Inspection 3-107
ECU 3-108

ECU Identification 3-108
ECU Removal 3-108
ECU Installation 3-109
ECU Power Supply Inspection 3-109
DFI Power Source 3-112
ECU Fuse Removal 3-112
ECU Fuse Installation 3-112
ECU Fuse Inspection 3-112
ECU Main Relay Removal/Installation 3-112
ECU Main Relay Inspection 3-112
Fuel Line 3-113
Fuel Pressure Inspection 3-113
Fuel Flow Rate Inspection 3-114
Fuel Pump 3-116
Fuel Pump Removal 3-116
Fuel Pump Installation 3-117
Fuel Pump Operation Inspection 3-117
Fuel Pump Operating Voltage Inspection 3-118
Pressure Regulator Removal 3-119
Pump Screen, Fuel Filter Cleaning 3-119
Fuel Pump Relay Removal/Installation 3-119
Fuel Pump Relay Inspection 3-119
Fuel Injectors 3-121
Fuel Injector Removal/Installation 3-121
Fuel Injector Audible Inspection 3-121
Fuel Injector Resistance Inspection 3-121
Fuel Injector Power Source Voltage Inspection 3-122
Fuel Injector Output Voltage Inspection 3-123
Fuel Injector Fuel Line Inspection 3-124
Throttle Grip and Cables 3-126
Free Play Inspection 3-126
Free Play Adjustment 3-126
Cable Installation 3-126
Cable Lubrication 3-126
Throttle Body Assy 3-127
Idle Speed Inspection/Adjustment 3-127
Synchronization Inspection/Adjustment 3-127
Throttle Body Assy Removal 3-127
Throttle Body Assy Installation 3-130
Throttle Body Assy Disassembly 3-132
Throttle Body Assy Assembly 3-133
Air Cleaner 3-134
Air Cleaner Element Removal/Installation 3-134
Air Cleaner Element Inspection 3-134
Air Cleaner Oil Draining 3-134
Air Cleaner Housing Removal 3-134
Fuel Tank 3-135
Fuel Tank Removal 3-135
Fuel Tank Installation 3-137
Fuel Tank and Cap Inspection 3-138
Fuel Tank Cleaning 3-138

Exploded View

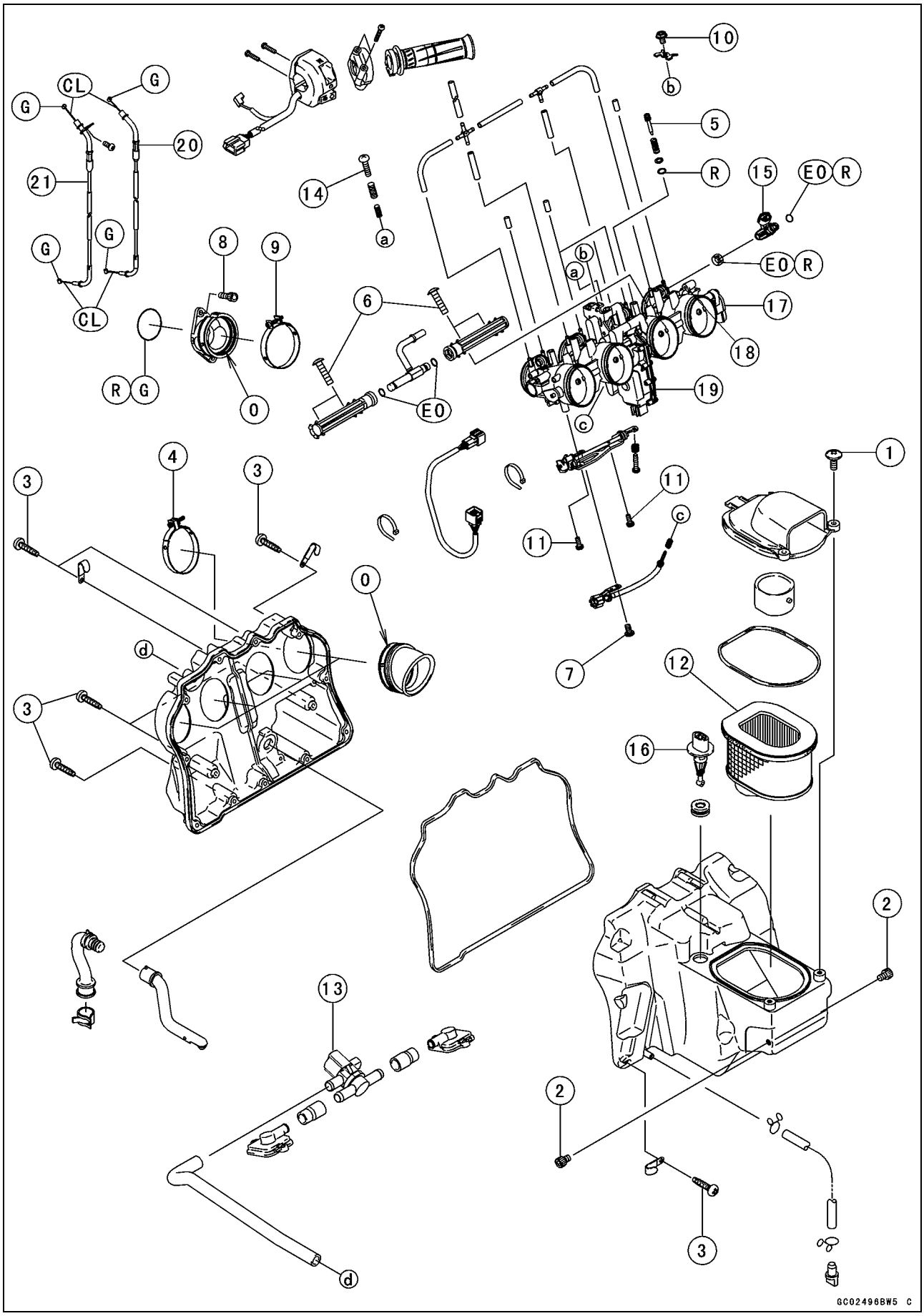

Exploded View

No.	Fastener	Torque			Remarks
		N·m	kgf·m	ft·lb	
1	Air Cleaner Duct Screws	3.8	0.39	34 in·lb	
2	Air Cleaner Housing Mounting Bolts	9.8	1.0	87 in·lb	
3	Air Cleaner Housing Tapping Screws	1.2	0.12	11 in·lb	
4	Air Duct Clamp Bolts	2.0	0.20	18 in·lb	
5	Bypass Screws	0.2	0.02	1.8 in·lb	
6	Delivery Pipe Assy Mounting Screws	3.4	0.35	30 in·lb	
7	Idle Adjusting Cable Clamp Screw	3.4	0.35	30 in·lb	
8	Throttle Body Assy Holder Bolts	13	1.3	115 in·lb	
9	Throttle Body Assy Holder Clamp Bolts	2.0	0.20	18 in·lb	
10	Throttle Cable Plate Bolt	5.9	0.60	52 in·lb	
11	Throttle Link Holder Screws	2.0	0.20	18 in·lb	

12. Air Cleaner Element
13. Air Switching Valve
14. Center Adjusting Screw
15. Fuel Injectors
16. Intake Air Temperature Sensor
17. Main Throttle Sensor
18. Subthrottle Sensor
19. Subthrottle Valve Actuator
20. Throttle Cable (Accelerator)
21. Throttle Cable (Decelerator)

CL: Apply cable lubricant.
EO: Apply engine oil.
G: Apply grease.
O: Apply 2-stroke oil.
R: Replacement Parts

Exploded View

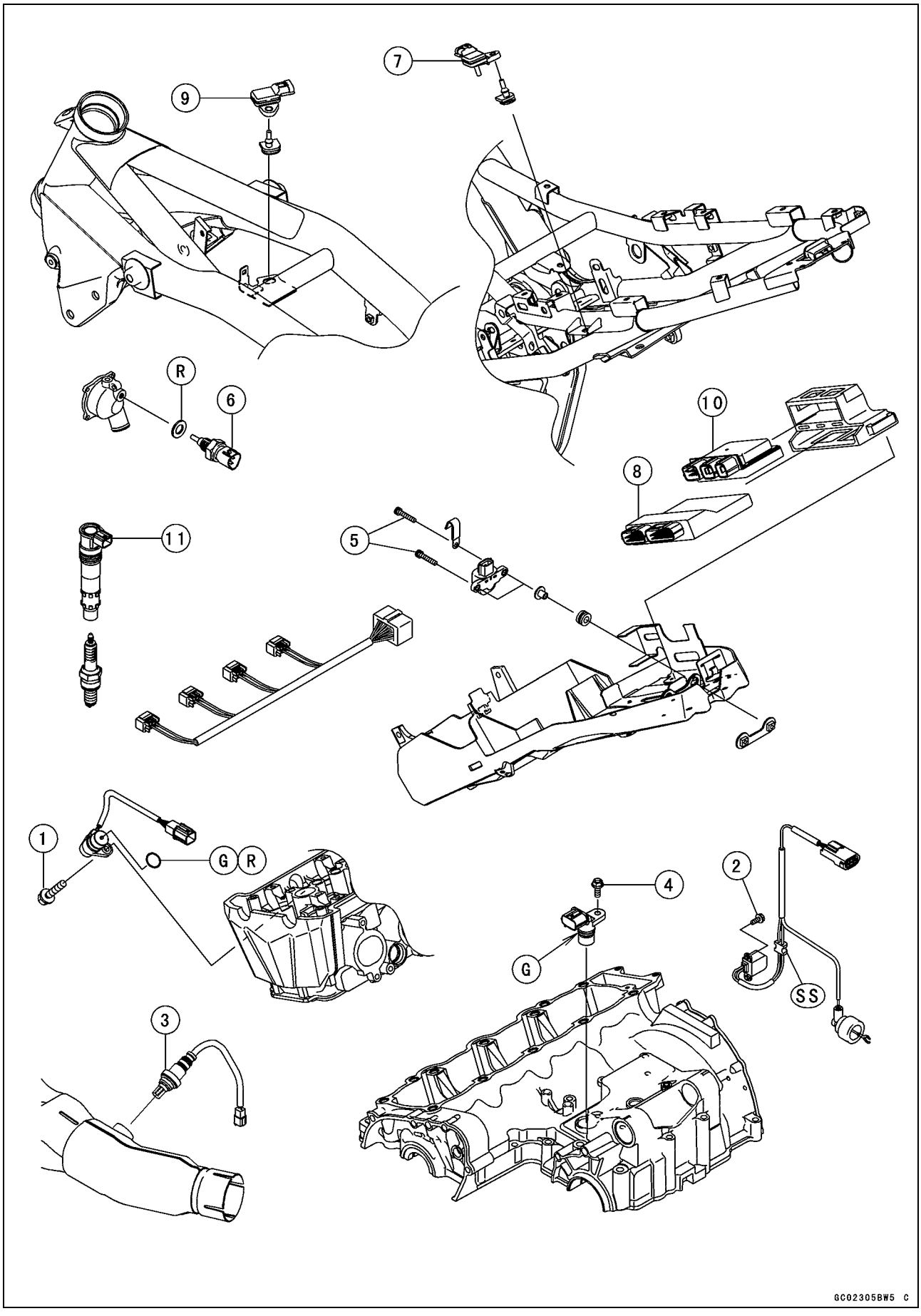

Exploded View

No.	Fastener	Torque			Remarks
		N·m	kgf·m	ft·lb	
1	Camshaft Position Sensor Bolt	12	1.2	106 in·lb	
2	Crankshaft Sensor Bolts	5.9	0.60	52 in·lb	
3	Oxygen Sensor	44.1	4.50	32.5	
4	Speed Sensor Bolt	12	1.2	106 in·lb	
5	Vehicle-down Sensor Bolts	6.0	0.61	53 in·lb	
6	Water Temperature Sensor	25	2.5	18	

7. Atmospheric Pressure Sensor
8. ECU
9. Intake Air Pressure Sensor
10. Relay Box
11. Stick Coils

G: Apply grease.
R: Replacement Parts
SS: Apply silicone sealant.

Exploded View

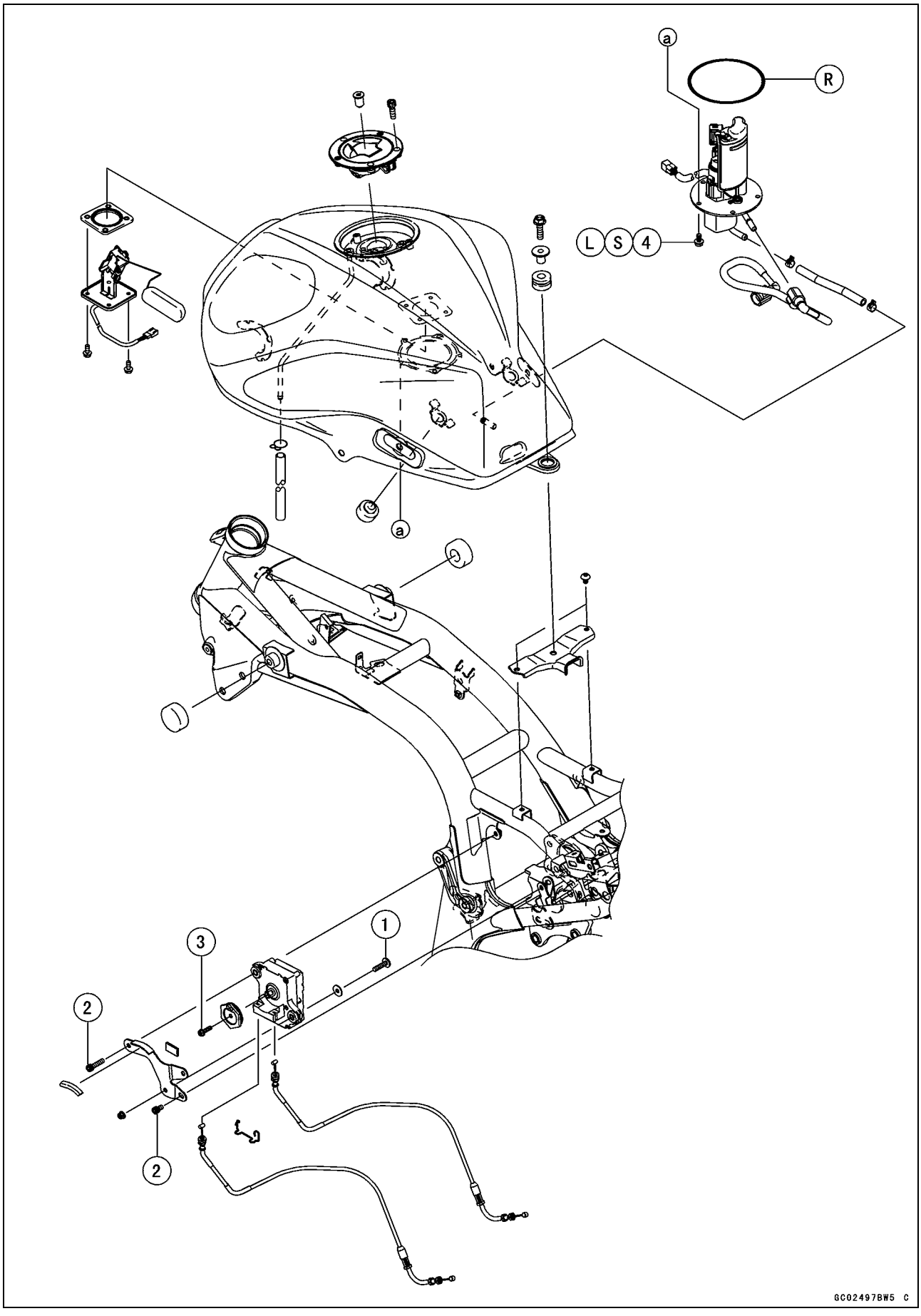

Exploded View

No.	Fastener	Torque			Remarks
		N·m	kgf·m	ft·lb	
1	Exhaust Butterfly Valve Actuator Bracket Bolt	6.9	0.70	61 in·lb	
2	Exhaust Butterfly Valve Actuator Mounting Bolts	6.9	0.70	61 in·lb	
3	Exhaust Butterfly Valve Actuator Pulley Bolt	5.0	0.51	44 in·lb	
4	Fuel Pump Bolts	9.8	1.0	87 in·lb	L, S

L: Apply a non-permanent locking agent.
R: Replacement Parts
S: Follow the specified tightening sequence.

DFI System

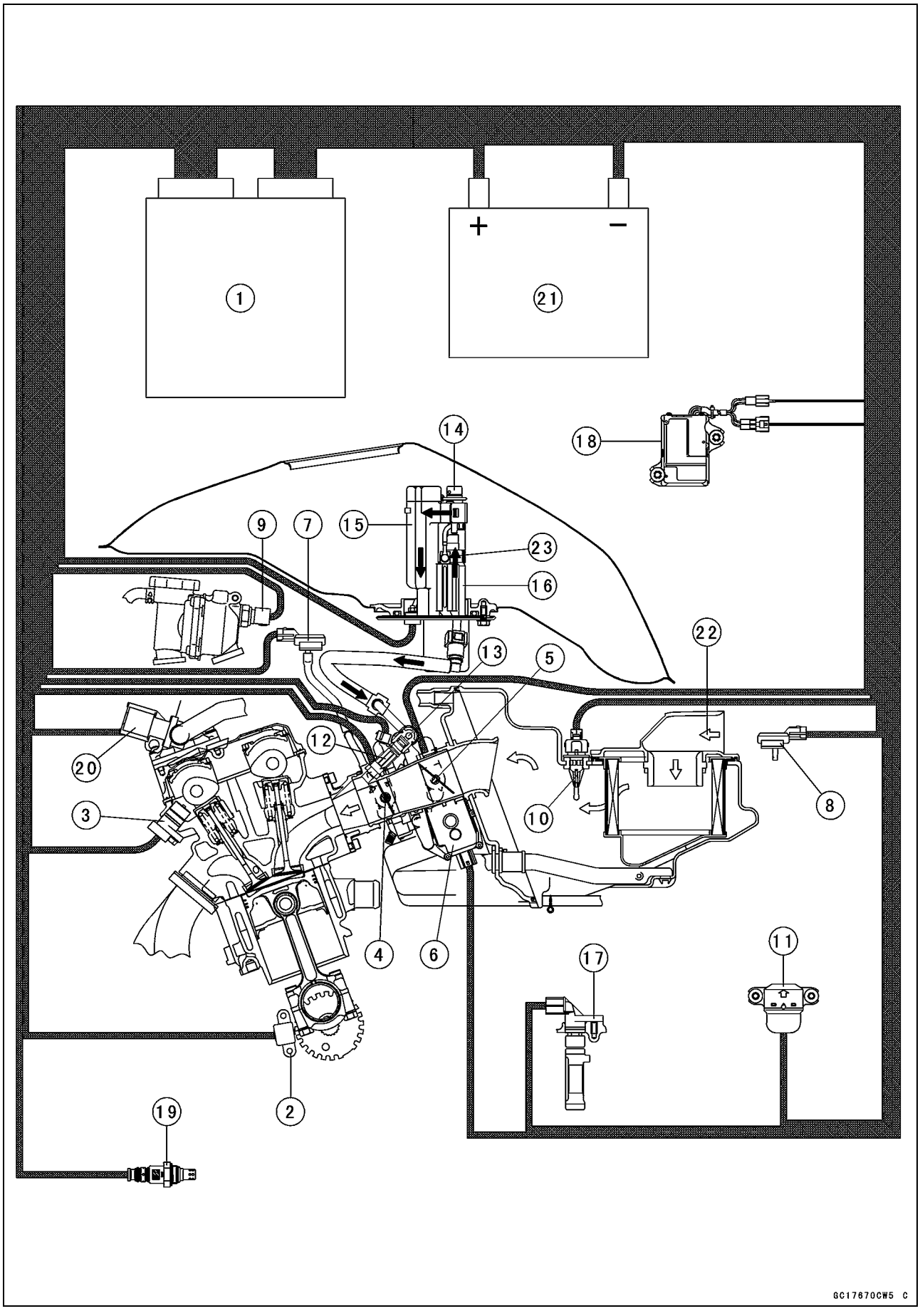

DFI System

1. ECU
2. Crankshaft Sensor
3. Camshaft Position Sensor
4. Main Throttle Sensor
5. Subthrottle Sensor
6. Subthrottle Valve Actuator
7. Intake Air Pressure Sensor
8. Atmospheric Pressure Sensor
9. Water Temperature Sensor
10. Intake Air Temperature Sensor
11. Vehicle-down Sensor
12. Fuel Injectors
13. Delivery Pipe Assy
14. Pressure Regulator
15. Fuel Filter
16. Fuel Pump
17. Speed Sensor
18. Exhaust Butterfly Valve Actuator
19. Oxygen Sensor
20. Air Switching Valve
21. Battery 12 V 8 Ah
22. Air Flow
23. Fuel Flow

DFI System

DFI System Wiring Diagram

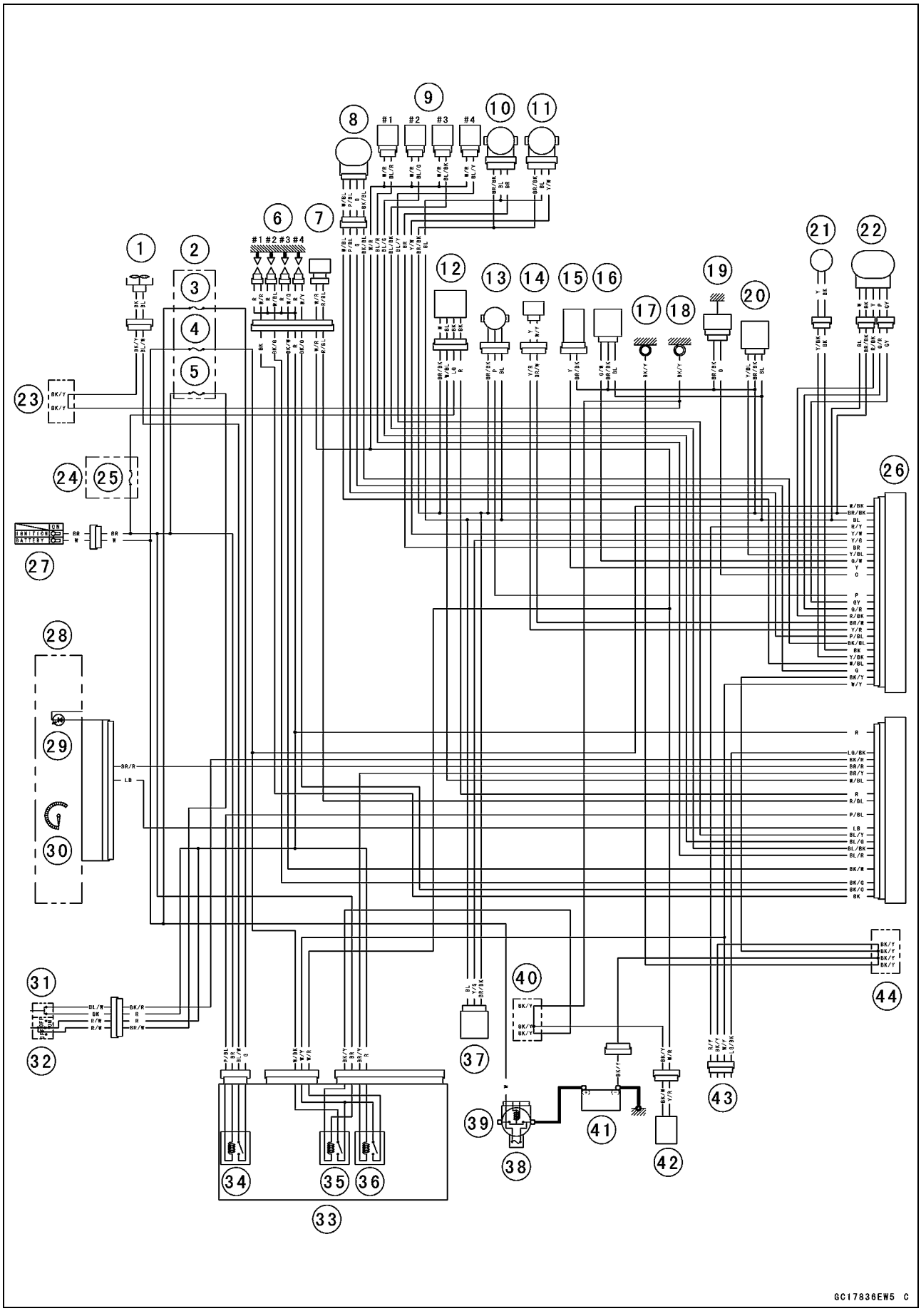

DFI System

Part Names

1. Fan Motor
2. Fuse Box 2
3. Radiator Fan Fuse 15 A
4. ECU Fuse 10 A
5. Ignition Fuse 10 A
6. Stick Coil #1, #2, #3, #4
7. Air Switching Valve
8. Subthrottle Valve Actuator
9. Fuel Injector #1, #2, #3, #4
10. Subthrottle Sensor
11. Main Throttle Sensor
12. Oxygen Sensor
13. Speed Sensor
14. Camshaft Position Sensor
15. Intake Air Temperature Sensor
16. Atmospheric Pressure Sensor
17. Meter Ground
18. Frame Ground
19. Water Temperature Sensor
20. Intake Air Pressure Sensor
21. Crankshaft Sensor
22. Exhaust Butterfly Valve Actuator
23. Water-proof Joint A
24. Fuse Box 1
25. Oxygen Sensor Heater Fuse 10 A
26. ECU
27. Ignition Switch
28. Meter Unit
29. Warning Indicator Light (LED) (FI/Immobilizer)
30. Tachometer
31. Starter Button
32. Engine Stop Switch
33. Relay Box
34. Radiator Fan Relay
35. ECU Main Relay
36. Fuel Pump Relay
37. Vehicle-down Sensor
38. Main Fuse 30 A
39. Starter Relay
40. Water-proof Joint B
41. Battery 12 V 8 Ah
42. Fuel Pump
43. Immobilizer/Kawasaki Diagnostic System Connector
44. Water-proof Joint C

○Color Codes:

BK: Black	GY: Gray	PU: Purple
BL: Blue	LB: Light Blue	R: Red
BR: Brown	LG: Light Green	V: Violet
CH: Chocolate	O: Orange	W: White
DG: Dark Green	P: Pink	Y: Yellow
G: Green		

DFI System

Terminal Numbers of ECU Connectors

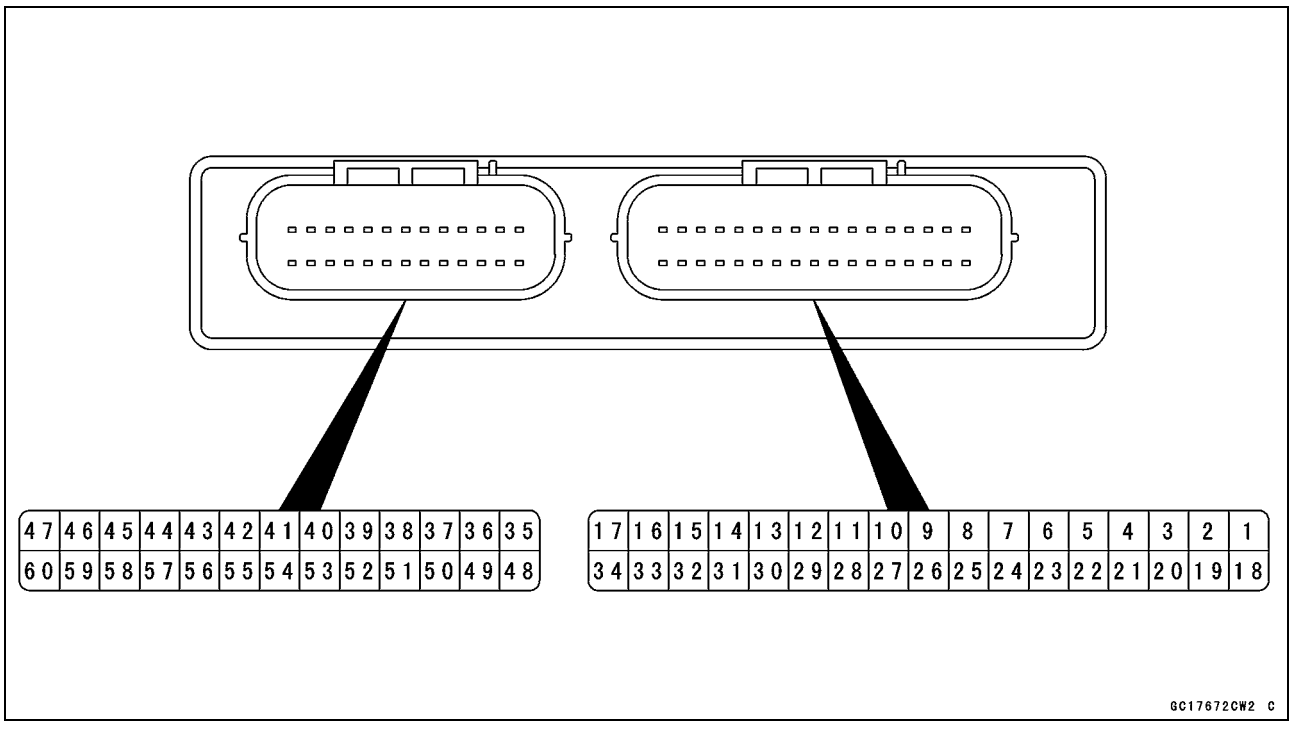

Terminal Names

1. Subthrottle Valve Actuator: BK/BL
2. Subthrottle Valve Actuator: G
3. Exhaust Butterfly Valve Actuator (–): GY
4. Exhaust Butterfly Valve Actuator (+): G/R
5. Exhaust Butterfly Valve Actuator Sensor: R/BK
6. Speed Sensor: P
7. Main Throttle Sensor: Y/W
8. Intake Air Pressure Sensor: Y/BL
9. Water Temperature Sensor: O
10. Power Supply to Sensors: BL
11. Vehicle-down Sensor: Y/G
12. Camshaft Position Sensor (+): Y/R
13. Crankshaft Sensor (+): Y/BK
14. Immobilizer Amplifier: V
15. Immobilizer Amplifier: Y
16. Power Supply to ECU (from ECU Main Relay): W/Y
17. Power Supply to ECU (from Battery): W/BK
18. Subthrottle Valve Actuator: P/BL
19. Subthrottle Valve Actuator: W/BL
20. Unused
21. Unused
22. Unused
23. Unused
24. Subthrottle Sensor: BR
25. Atmospheric Pressure Sensor: G/W
26. Intake Air Temperature Sensor: Y
27. Unused
28. Ground for Sensors: BR/BK
29. Camshaft Position Sensor (–): BR/W
30. Crankshaft Sensor (–): BK
31. Immobilizer Amplifier: LG
32. External Communication Line (Immobilizer System/*KDS): R/Y
33. Unused
34. Ground for ECU: BK/Y

DFI System

35. Engine Stop Switch: R
36. Starter Lockout Switch: R/G
37. Starter Button: BK/R
38. Fuel Pump Relay: BR/Y
39. Oxygen Sensor: W/BL
40. Unused
41. Neutral Switch: LG
42. Radiator Fan Relay: P/BL
43. Injector #2: BL/G
44. Injector #1: BL/R
45. Stick Coil #3: BK/W
46. Stick Coil #2: BK/G
47. Stick Coil #1: BK
48. Sidestand Switch: G/BK
49. Ground: P
50. External Communication Line (Immobilizer System/*KDS): LG/BK
51. Meter Unit (Tachometer): LB
52. Warning Indicator Light (LED) (FI/Immobilizer): BR/R
53. Unused
54. Oxygen Sensor Heater: R
55. Air Switching Valve: R/BL
56. Injector #4: BL/Y
57. Injector #3: BL/BK
58. Ground for Fuel System: BK/Y
59. Ground for Ignition System: BK/Y
60. Stick Coil #4: BK/O

*: KDS (Kawasaki Diagnostic System)

DFI Parts Location

Main Throttle Sensor [A]
Subthrottle Sensor [B]
Fuel Injectors #1, #2, #3, #4 [C]

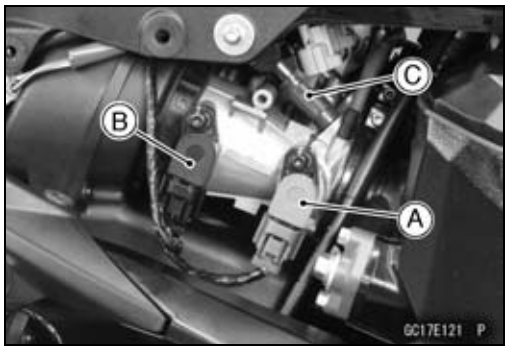

Crankshaft Sensor [A]
Oxygen Sensor [B]

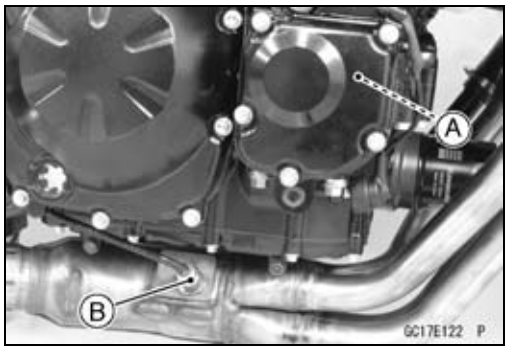

Ignition Key (Transponder) [A]
Ignition Switch [B]
Immobilizer Antenna [C]
Immobilizer Amplifier [D]
Warning Indicator Light (LED) [E]

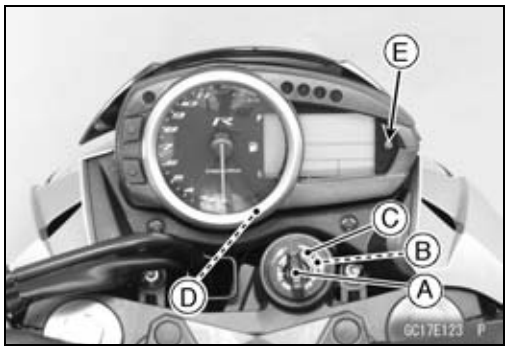

Stick Coils #1, #2, #3, #4 [A]
Air Switching Valve [B]
Camshaft Position Sensor [C]

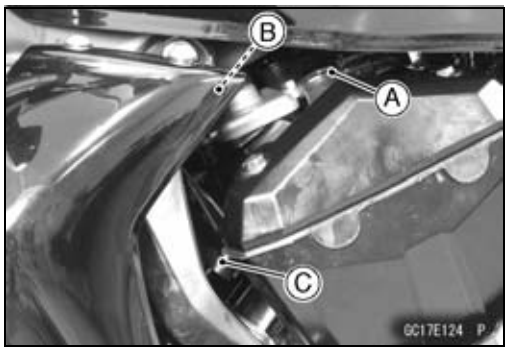

Subthrottle Valve Actuator [A]
Speed Sensor [B]

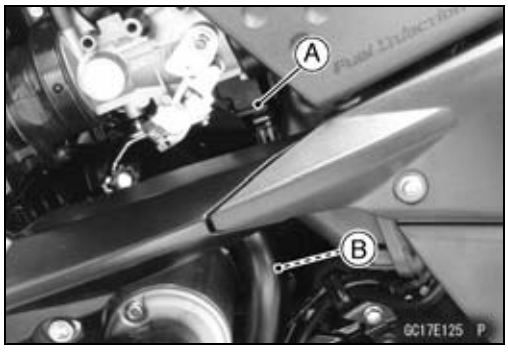

DFI Parts Location

Water Temperature Sensor [A]
Intake Air Pressure Sensor [B]

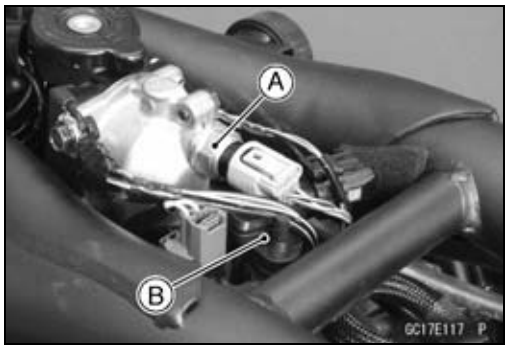

Intake Air Temperature Sensor [A]

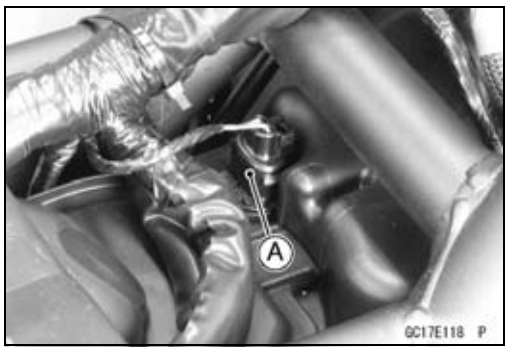

Exhaust Butterfly Valve Actuator [A]
Fuse Box 1 [B] (Oxygen Sensor Heater Fuse 10 A)
Fuse Box 2 [C] (ECU Fuse 10 A, Ignition Fuse 10 A, Radiator Fan Fuse 15 A)
Battery 12 V 8 Ah [D]
Atmospheric Pressure Sensor [E]

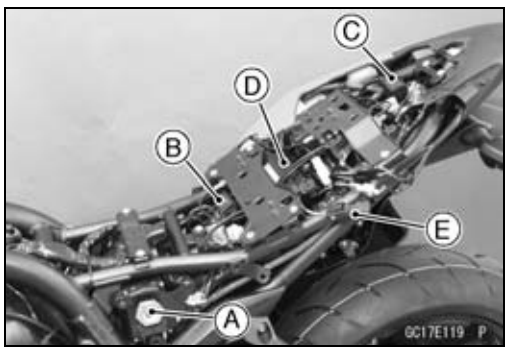

Relay Box [A] (ECU Main Relay, Radiator Fan Relay, Fuel Pump Relay)
ECU [B]
Immobilizer/Kawasaki Diagnostic System Connector [C]
Vehicle-down Sensor [D]

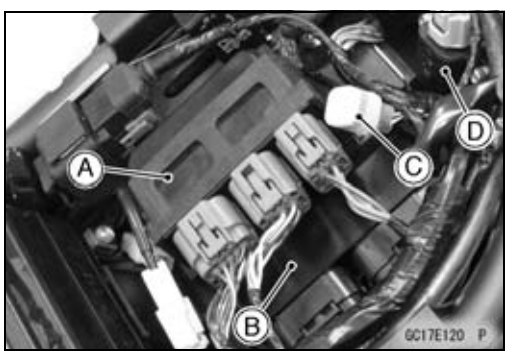

Fuel Pump [A]

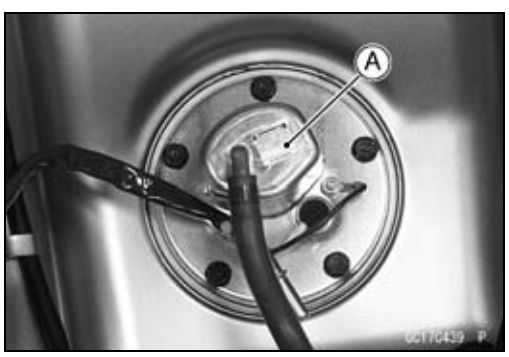

Specifications

Item	Standard
Digital Fuel Injection System	
Idle Speed	1 100 ±50 r/min (rpm)
Throttle Body Assy:	
Throttle Valve	Dual throttle valve
Bore	ϕ32 mm (1.26 in.)
Throttle Body Vacuum	35.3 ±1.3 kPa (265 ±10 mmHg) at idle speed
Bypass Screws (Turn Out)	2 1/2 (for reference)
ECU:	
Make	DENSO
Type	Digital memory type, with built in IC igniter, sealed with resin
Usable Engine Speed	100 ~ 12 100 r/min (rpm)
Fuel Pressure (High Pressure Line)	294 kPa (3.0 kgf/cm², 43 psi) with engine idling
Fuel Pump:	
Type	In-tank friction pump
Discharge	50 mL (1.7 US oz.) or more for 3 seconds
Fuel Injectors:	
Type	INP-288
Nozzle Type	Fine atomizing type with 8 holes
Resistance	About 11.7 ~ 12.3 Ω at 20°C (68°F)
Main Throttle Sensor:	
Input Voltage	DC 4.75 ~ 5.25 V
Output Voltage	DC 0.995 ~ 1.025 V at idle throttle opening
	DC 4.18 ~ 4.38 V at full throttle opening (for reference)
Resistance	4 ~ 6 kΩ
Intake Air Pressure Sensor/Atmospheric Pressure Sensor:	
Input Voltage	DC 4.75 ~ 5.25 V
Output Voltage	DC 3.80 ~ 4.20 V at standard atmospheric pressure (see this text for details)
Intake Air Temperature Sensor:	
Output Voltage	About DC 2.25 ~ 2.50 V at 20°C (68°F)
Resistance	2.21 ~ 2.69 kΩ at 20°C (68°F)
	About 0.322 kΩ at 80°C (176°F)
Water Temperature Sensor:	
Resistance	see the Electrical System chapter
Output Voltage	About DC 2.80 ~ 2.97 V at 20°C (68°F)
Speed Sensor:	
Input Voltage	DC 4.75 ~ 5.25 V
Output Voltage	About DC 0.05 ~ 0.09 V or DC 4.5 ~ 4.9 V at ignition switch ON and 0 km/h
Vehicle-down Sensor:	
Input Voltage	DC 4.75 ~ 5.25 V

Specifications

Item	Standard
Output Voltage	With sensor tilted 60 ~ 70° or more right or left: DC 0.65 ~ 1.35 V
	With sensor arrow mark pointed up: DC 3.55 ~ 4.45 V
Subthrottle Sensor:	
Input Voltage	DC 4.75 ~ 5.25 V
Output Voltage	DC 0.48 ~ 0.52 V at subthrottle valve full close position
	DC 3.8 ~ 4.0 V at subthrottle valve full open position
Resistance	4 ~ 6 kΩ
Exhaust Butterfly Valve Actuator Sensor:	
Input Voltage	DC 4.75 ~ 5.25 V
Output Voltage	DC 3.46 ~ 3.76 V at pulley original position
Resistance	4 ~ 6 kΩ
Immobilizer Antenna:	
Resistance	About 0.6 ~ 0.9 Ω
Exhaust Butterfly Valve Actuator:	
Resistance	5 ~ 200 Ω (for reference)
Subthrottle Valve Actuator:	
Resistance	About 5.2 ~ 7.8 Ω
Input Voltage	About DC 8.5 ~ 10.5 V
Oxygen Sensor:	
Output Voltage (Rich)	DC 0.7 V or more
Output Voltage (Lean)	DC 0.2 V or less
Heater Resistance	11.7 ~ 15.5 Ω at 20°C (68°F)
Throttle Grip and Cables	
Throttle Grip Free Play	2 ~ 3 mm (0.08 ~ 0.12 in.)
Air Cleaner	
Element	Paper filter

Special Tools and Sealant

Oil Pressure Gauge, 5 kgf/cm²:
57001-125

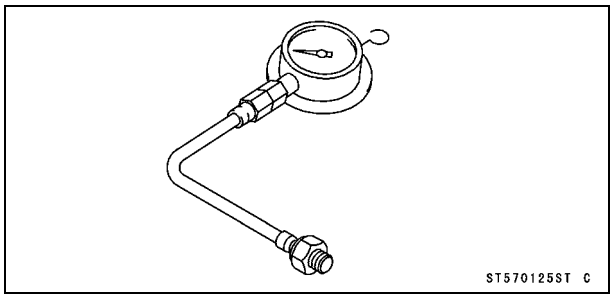

Fork Oil Level Gauge:
57001-1290

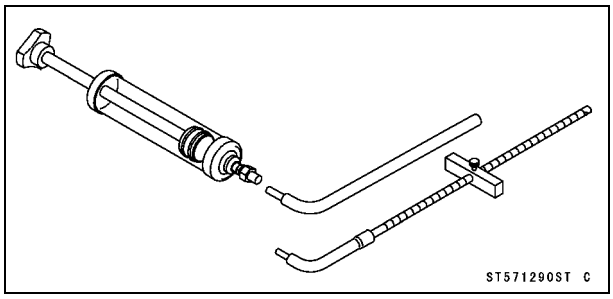

Vacuum Gauge:
57001-1369

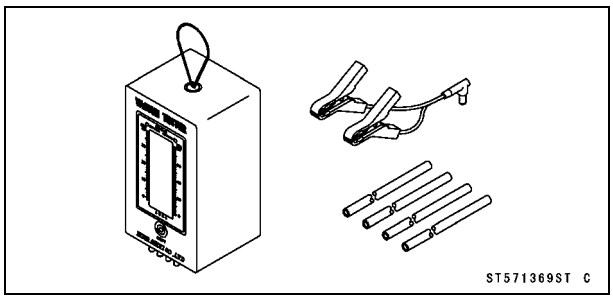

Hand Tester:
57001-1394

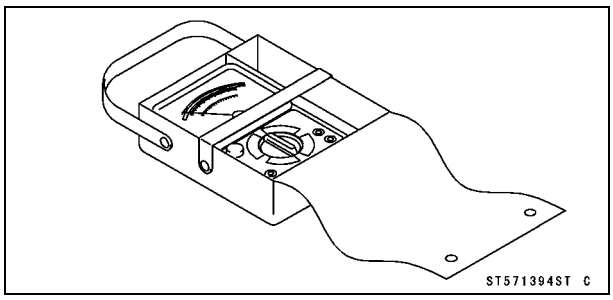

Throttle Sensor Setting Adapter #1:
57001-1400

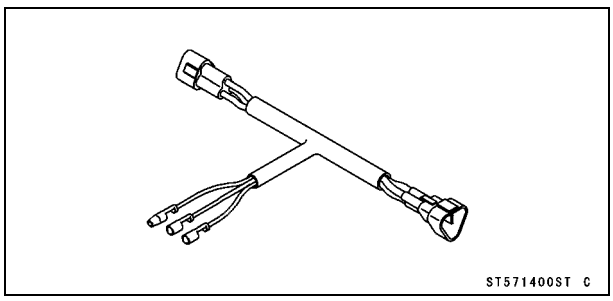

Peak Voltage Adapter:
57001-1415

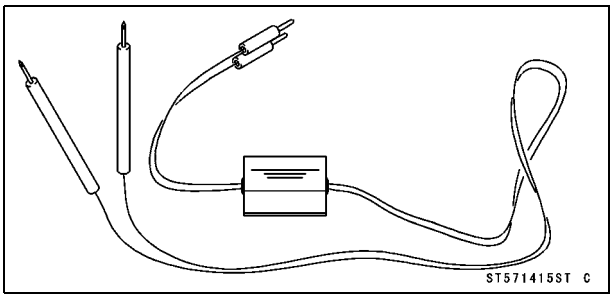

Needle Adapter Set:
57001-1457

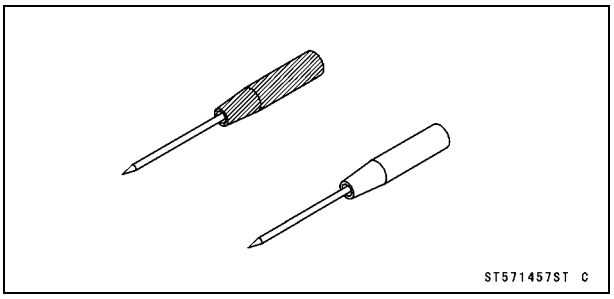

Throttle Sensor Setting Adapter:
57001-1538

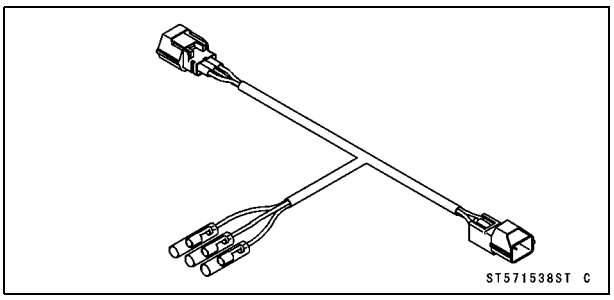

Sensor Harness Adapter:
57001-1561

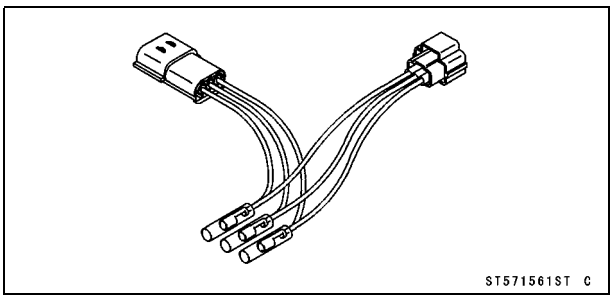

Extension Tube:
57001-1578

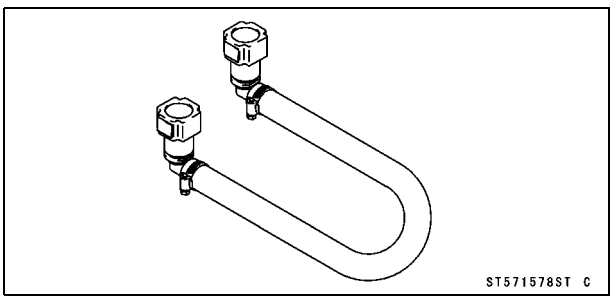

Special Tools and Sealant

Fuel Pressure Gauge Adapter:
57001-1593

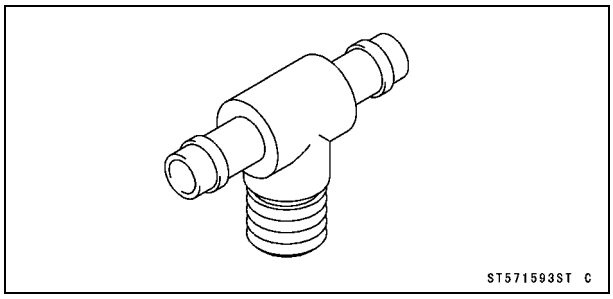

Oxygen Sensor Measuring Adapter:
57001-1682

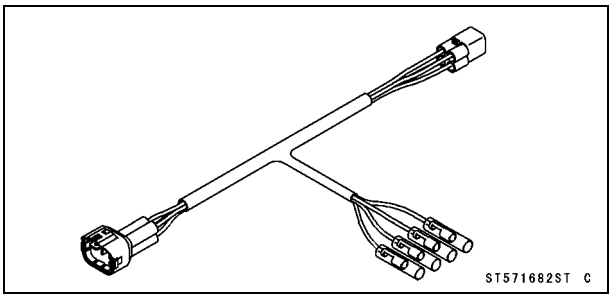

Fuel Hose:
57001-1607

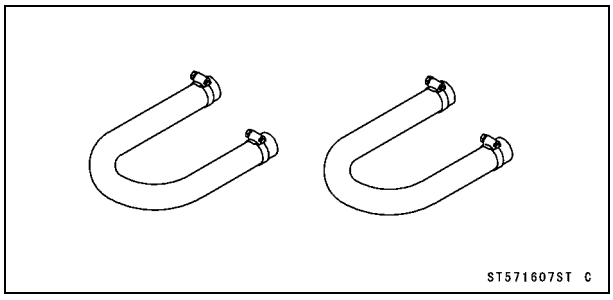

Measuring Adapter:
57001-1700

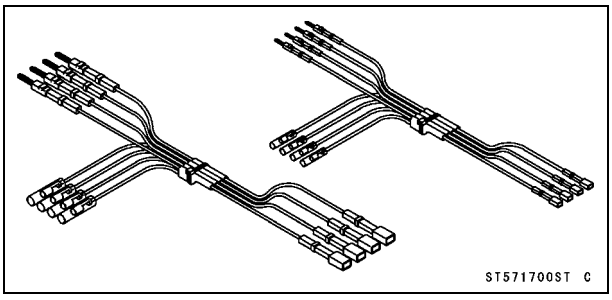

Speed Sensor Measuring Adapter:
57001-1667

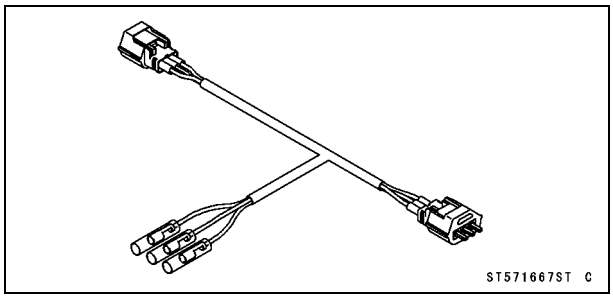

Liquid Gasket, TB1211:
56019-120

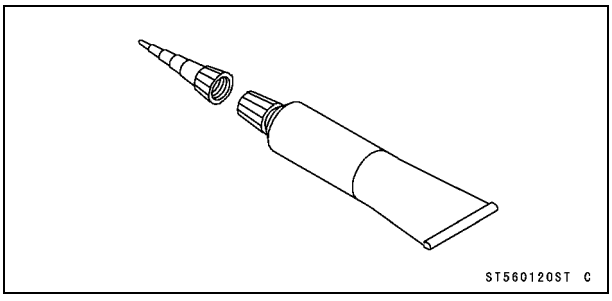

DFI Servicing Precautions

There are a number of important precautions that should be followed servicing the DFI system.

- This DFI system is designed to be used with a 12 V sealed battery as its power source. Do not use any other battery except for a 12 V sealed battery as a power source.
- Do not reverse the battery cable connections. This will damage the ECU.
- To prevent damage to the DFI parts, do not disconnect the battery cables or any other electrical connections when the ignition switch is ON, or while the engine is running.
- Take care not to short the leads that are directly connected to the battery positive (+) terminal to the chassis ground.
- When charging, remove the battery from the motorcycle. This is to prevent ECU damage by excessive voltage.

- Whenever the DFI electrical connections are to be disconnected, first turn off the ignition switch, and disconnect the battery (–) terminal. Do not pull the lead, only the connector. Conversely, make sure that all the DFI electrical connections are firmly reconnected before starting the engine.
- Connect these connectors until they click [A].

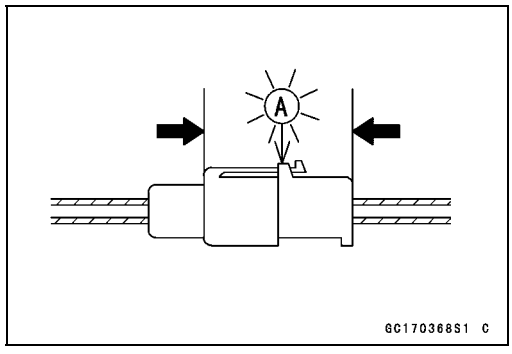

- Do not turn the ignition switch ON while any of the DFI electrical connectors are disconnected. The ECU memorizes service codes.
- Do not spray water on the electrical parts, DFI parts, connectors, leads and wiring.
- If a transceiver is installed on the motorcycle, make sure that the operation of the DFI system is not influenced by electric wave radiated from the antenna. Check operation of the system with the engine at idle. Locate the antenna as far as possible away from the ECU.
- When any fuel hose is disconnected, do not turn on the ignition switch. Otherwise, the fuel pump will operate and fuel will spout from the fuel hose.
- Do not operate the fuel pump if the pump is completely dry. This is to prevent pump seizure.
- Before removing the fuel system parts, blow the outer surfaces of these parts clean with compressed air.
- When any fuel hose is disconnected, fuel may spout out by residual pressure in the fuel line. Cover the hose joint with a piece of clean cloth to prevent fuel spillage.
- When installing the fuel hoses, avoid sharp bending, kinking, flattening or twisting, and route the fuel hoses with a minimum of bending so that the fuel flow will not be obstructed.
- Run the hoses according to Cable, Wire, and Hose Routing section in the Appendix chapter.
- To prevent corrosion and deposits in the fuel system, do not add to fuel any fuel antifreeze chemicals.

DFI Servicing Precautions

○If the motorcycle is not properly handled, the high pressure inside the fuel line can cause fuel to leak or the hose to burst. Remove the fuel tank (see Fuel Tank Removal) and check the fuel hose.
Fuel Intake Hose [A]
Fuel Outlet Hose [B]

★Replace the fuel hose if any fraying, cracks or bulges are noticed.

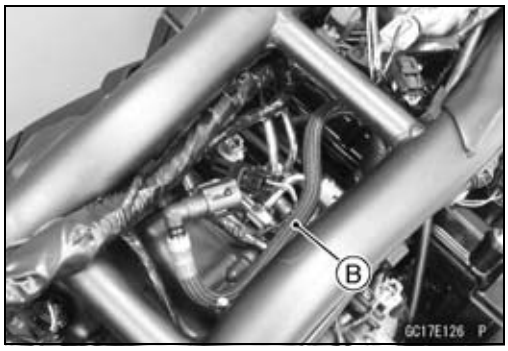

○To maintain the correct fuel/air mixture (F/A), there must be no intake air leaks in the DFI system. Be sure to install the oil filler plug [A] after filling the engine oil.

Torque - Oil Filler Plug: 2.0 N·m (0.20 kgf·m, 18 in·lb)

Troubleshooting the DFI System

The warning indicator light (LED) [A] is used for the FI indicator, immobilizer indicator and oil pressure warning indicator.

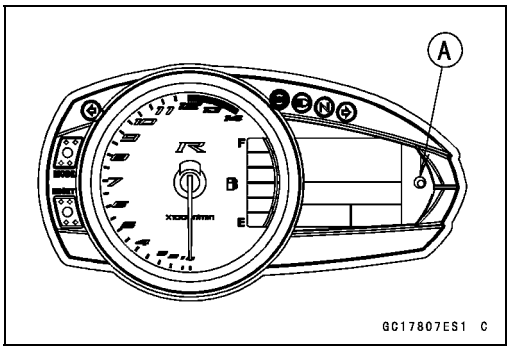

Outline

When a problem occurs with DFI system, the warning indicator light (LED) [A] and FI warning symbol [B] blinks to alert the rider. In addition, the condition of the problem is stored in the memory of the ECU. The warning indicator light (LED) and immobilizer warning symbol [C] blinks, when a problem occurs in the system.

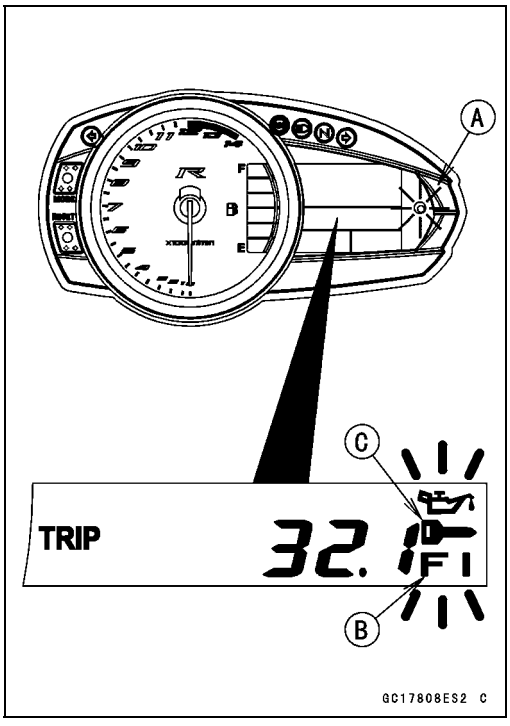

With the engine stopped and turned in the self-diagnosis mode, the service code [A] is displayed on the LCD (Liquid Crystal Display) by the number of two digits.

If the problem is with the following parts, the ECU can not recognize these problem. Therefore, the warning indicator light (LED), FI and/or immobilizer warning symbols do not blinks, and service code is not displayed.

- LCD for Meter Unit
- Fuel Pump
- Fuel Pump Relay
- Fuel Injectors
- Stick Coil Secondary Wiring and Ground Wiring
- ECU Main Relay
- ECU Power Source Wiring and Ground Wiring

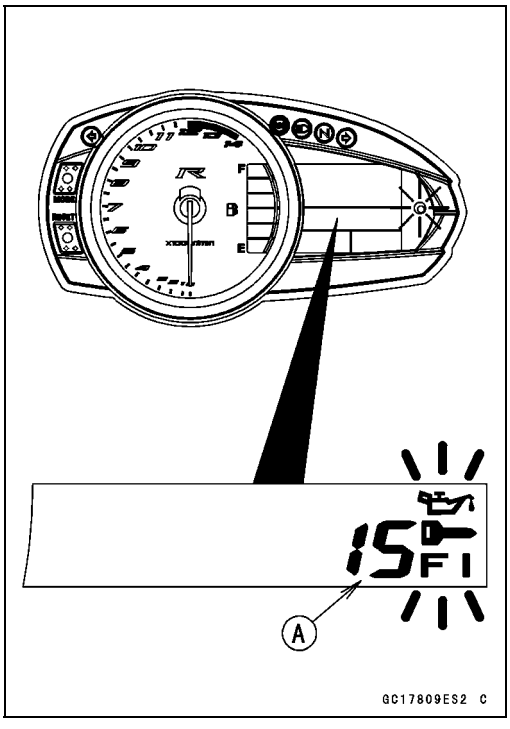

Troubleshooting the DFI System

When the service code [A] is displayed, for first ask the rider about the conditions [B] of trouble, and then start to determine the cause [C] of problem.

As a pre-diagnosis inspection, check the ECU for ground and power supply, the fuel line for no fuel leaks, and for correct pressure. The pre-diagnosis items are not indicated by the warning indicator light (LED) and FI warning symbol.

Don't rely solely on the DFI self-diagnosis function, use common sense.

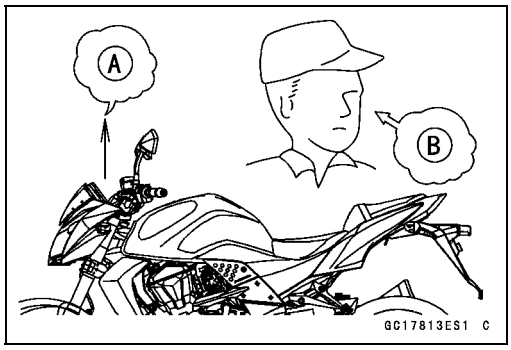

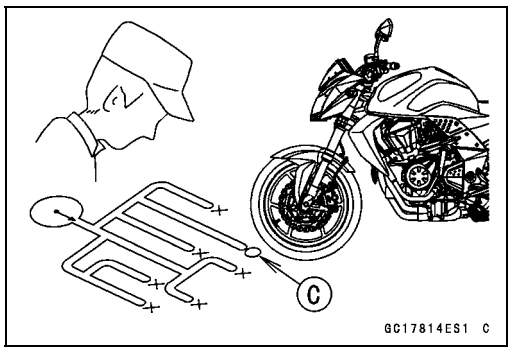

Even when the DFI system is operating normally, the warning indicator light (LED) and FI warning symbol may blink under strong electrical interference. Additional measures are not required. Turn the ignition switch OFF to stop the indicator light and symbol.

If the warning indicator light (LED) and FI warning symbol of the motorcycle brought in for repair still blinks, check the service code.

When the repair has been done, the FI warning symbol goes off. But the service codes stored in memory of the ECU are not erased to preserve the problem history. The problem history can be referred using the KDS (Kawasaki Diagnostic System) when solving unstable problems.

When the motorcycle is down, the vehicle-down sensor operates and the ECU shuts off the fuel pump relay, fuel injectors and ignition system. The ignition switch is left ON. If the starter button is pushed, the electric starter turns but the engine does not start. When the starter button is pushed, the warning indicator light (LED) and FI warning symbol blink but the service code is not displayed. To start the engine again, raise the motorcycle, turn the ignition switch OFF, and then ON.

Much of the DFI system troubleshooting work consists of confirming continuity of the wiring. The DFI parts are assembled and adjusted with precision, and it is impossible to disassemble or repair them.

Troubleshooting the DFI System

- When checking the DFI parts, use a digital meter which can be read two decimal place voltage or resistance.

○The DFI part connectors [A] have seals [B], including the ECU. When measuring the input or output voltage with the connector joined, use the needle adapter set [C]. Insert the needle adapter inside the seal until the needle adapter reaches the terminal.

Special Tool - Needle Adapter Set: 57001-1457

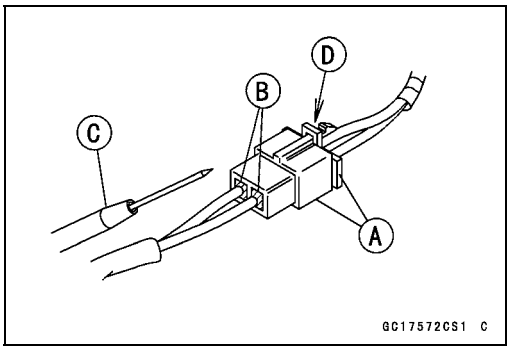

NOTICE

Insert the needle adapter straight along the terminal in the connector to prevent short-circuit between terminals.

- Make sure that measuring points are correct in the connector, noting the position of the lock [D] and the lead color before measurement. Do not reverse connections of a digital meter.
- Be careful not to short-circuit the leads of the DFI or electrical system parts by contact between adapters.
- Turn the ignition switch ON and measure the voltage with the connector joined.

NOTICE

Incorrect, reverse connection or short circuit by needle adapters could damage the DFI or electrical system parts.

○After measurement, remove the needle adapters and apply silicone sealant to the seals [A] of the connector [B] for waterproofing.

Sealant - Liquid Gasket, TB1211: 56019-120

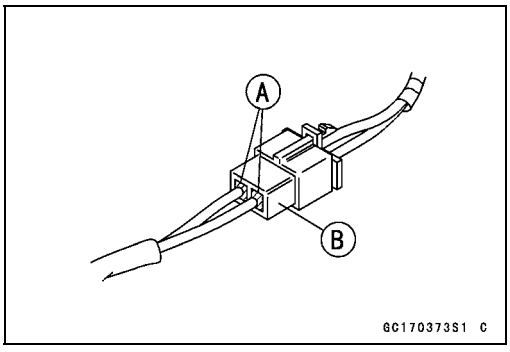

- Always check battery condition before replacing the DFI parts. A fully charged battery is a must for conducting accurate tests of the DFI system.
- Trouble may involve one or in some cases all items. Never replace a defective part without determining what CAUSED the problem. If the problem was caused by some other item or items, they too must be repaired or replaced, or the new replacement part will soon fail again.
- Measure coil winding resistance when the DFI part is cold (at room temperature).
- Make sure all connectors in the circuit are clean and tight, and examine leads for signs of burning, fraying, short, etc. Deteriorated leads and bad connections can cause reappearance of problems and unstable operation of the DFI system.

★If any wiring is deteriorated, replace the wiring.

Troubleshooting the DFI System

- Pull each connector [A] apart and inspect it for corrosion, dirt, and damage.

★If the connector is corroded or dirty, clean it carefully. If it is damaged, replace it. Connect the connectors securely.

- Check the wiring for continuity.

○Use the wiring diagram to find the ends of the lead which is suspected of being a problem.

○Connect the hand tester between the ends of the leads.

Special Tool - Hand Tester: 57001-1394

○Set the tester to the × 1 Ω range, and read the tester.

★If the tester does not read 0 Ω, the lead is defective. Replace the lead or the main harness or the subharness.

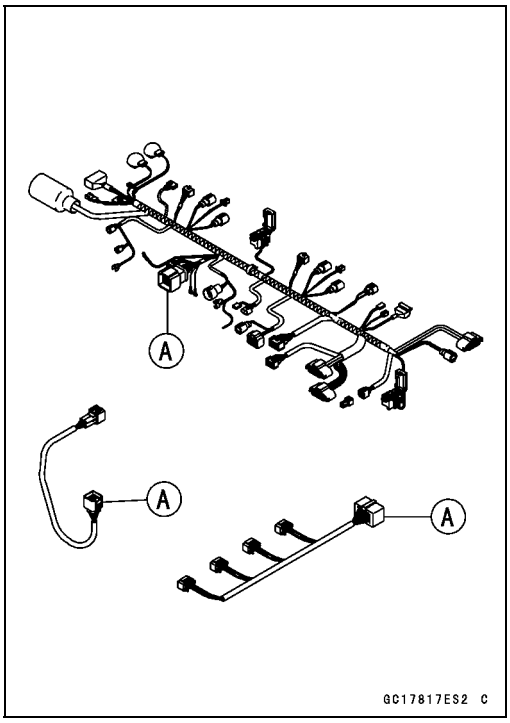

○If both ends of a harness [A] are far apart, ground [B] the one end [C], using a jumper lead [D] and check the continuity between the end [E] and the ground [F]. This enables to check a long harness for continuity. If the harness is open, repair or replace the harness.

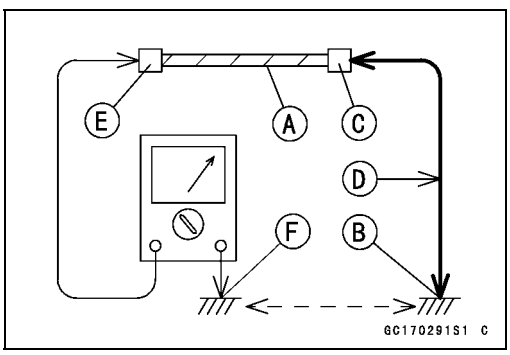

○When checking a harness [A] for short circuit, open one end [B] and check the continuity between the other end [C] and ground [D]. If there is continuity, the harness has a short circuit to ground, and it must be repaired or replaced.

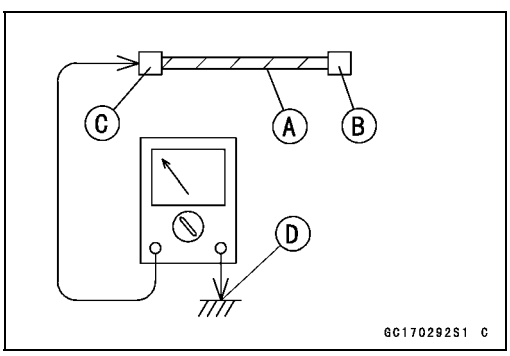

- Narrow down suspicious locations by repeating the continuity tests from the ECU connectors.

★If no abnormality is found in the wiring or connectors, the DFI parts are the next likely suspects. Check the part, starting with input and output voltages. However, there is no way to check the ECU itself.

★If an abnormality is found, replace the affected DFI part.

★If no abnormality is found in the wiring, connectors, and DFI parts, replace the ECU.

Troubleshooting the DFI System

DFI Diagnosis Flow Chart

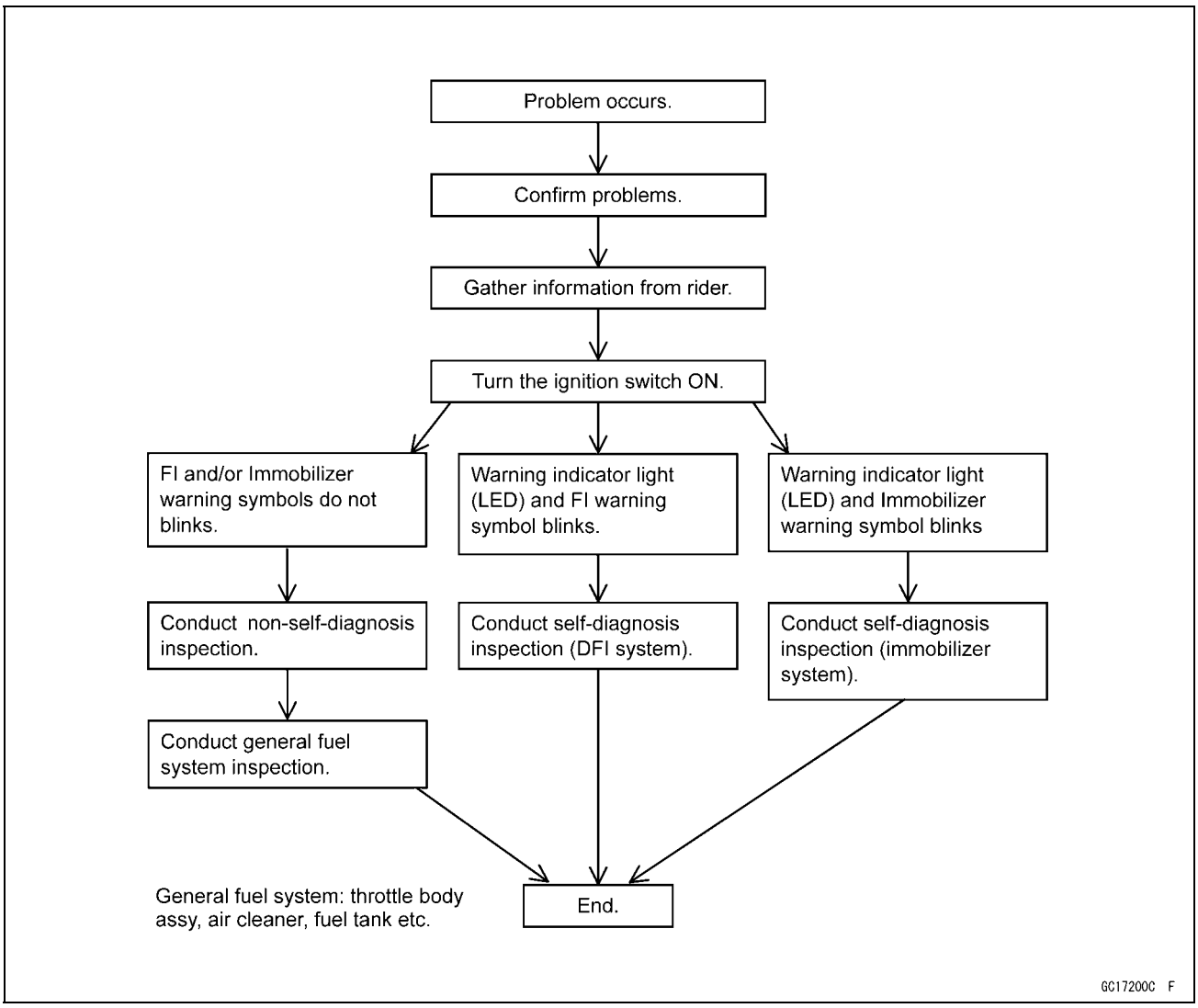

Inquiries to Rider

○Each rider reacts to problems in different ways, so it is important to confirm what kind of symptoms the rider has encountered.

○Try to find out exactly what problem occurred under exactly what conditions by asking the rider; knowing this information may help you reproduce the problem.

○The following sample diagnosis sheet will help prevent you from overlooking any areas, and will help you decide if it is a DFI system problem, or a general engine problem.

Troubleshooting the DFI System

Sample Diagnosis Sheet

Rider name:	**Registration No. (license plate No.):**	**Year of initial registration:**
Model:	**Engine No.:**	**Frame No.:**
Date problem occurred:		**Mileage:**
Environment when problem occurred.		
Weather	☐ fine, ☐ cloudy, ☐ rain, ☐ snow, ☐ always, ☐ other:	
Temperature	☐ hot, ☐ warm, ☐ cold, ☐ very cold, ☐ always, ☐ other:	
Problem frequency	☐ chronic, ☐ often, ☐once	
Road	☐ street, ☐ highway, ☐ mountain road (☐ uphill, ☐ downhill), ☐ bumpy, ☐ pebble	
Altitude	☐ normal, ☐ high (about 1 000 m or more)	
Motorcycle conditions when problem occurred.		
Warning indicator light (LED)	☐ Starts blinking about 3 seconds after from ignition switch ON, and goes off after engine pressure becomes high enough (with engine running).	
	☐ Starts blinking about 3 seconds after from ignition switch ON, and the FI warning symbol on the LCD starts blinking (DFI system problem).	
	☐ Starts blinking about 3 seconds after from ignition switch ON, and the immobilizer warning symbol on the LCD starts blinking (immobilizer system problem).	
	☐ Starts blinking about 3 seconds after from ignition switch ON, and about 10 seconds after, the FI warning symbol on the LCD starts blinking (ECU communication error).	
	☐ Does not blink about 3 seconds after ignition switch ON.	
	☐ light up (ECU or meter unit replace).	
Starting difficulty	☐ starter motor not rotating.	
	☐ starter motor rotating but engine do not turn over.	
	☐ starter motor and engine do not turn over.	
	☐ no fuel flow (☐ no fuel in tank, ☐ no fuel pump sound).	
	☐ no spark.	
	☐ other:	
Engine stalls	☐ right after starting.	
	☐ when opening throttle grip.	
	☐ when closing throttle grip.	
	☐ when moving off.	
	☐ when stopping the motorcycle.	
	☐ when cruising.	
	☐ other:	

Troubleshooting the DFI System

Poor running at low speed	☐ very low idle speed, ☐ very high idle speed, ☐ rough idle speed.
	☐ battery voltage is low (charge the battery).
	☐ spark plug loose (tighten it).
	☐ spark plug dirty, broken, or gap maladjusted (remedy it).
	☐ backfiring.
	☐ afterfiring.
	☐ hesitation when acceleration.
	☐ engine oil viscosity too high.
	☐ brake dragging.
	☐ engine overheating.
	☐ clutch slipping.
	☐ other:
Poor running or no power at high speed	☐ spark plug loose (tighten it).
	☐ spark plug dirty, broken, or gap maladjusted (remedy it).
	☐ spark plug incorrect (replace it).
	☐ knocking (fuel poor quality or incorrect, → use high-octane gasoline).
	☐ brake dragging.
	☐ clutch slipping.
	☐ engine overheating.
	☐ engine oil level too high.
	☐ engine oil viscosity too high.
	☐ other:

DFI System Troubleshooting Guide

NOTE

○*This is not an exhaustive list, giving every possible cause for each problem listed. It is meant simply as a rough guide to assist the troubleshooting for some of the more common difficulties in DFI system.*

○*The ECU may be involved in the DFI electrical and ignition system troubles. If these parts and circuits are checked out good, be sure to check the ECU for ground and power supply. If the ground and power supply are checked good, replace the ECU.*

Engine Won't Turn Over

Symptoms or Possible Causes	Actions (chapter)
Neutral, starter lockout or sidestand switch trouble	Inspect each switch (see chapter 16).
Immobilizer system trouble	Inspect (see chapter 3).
Vehicle-down sensor operated	Turn ignition switch OFF (see chapter 3).
Vehicle-down sensor trouble	Inspect (see chapter 3).
Crankshaft sensor trouble	Inspect (see chapter 16).
Stick coil shorted or not in good contact	Inspect or Reinstall (see chapter 16).
Stick coil trouble	Inspect (see chapter 16).
Spark plug dirty, broken or gap maladjusted	Inspect and replace (see chapter 2).
Spark plug incorrect	Replace it with the correct plug (see chapter 2).
ECU ground and power supply trouble	Inspect (see chapter 3).
ECU trouble	Inspect (see chapter 3).
No or little fuel in tank	Supply fuel (see Owner's Manual).
Fuel injector trouble	Inspect and replace (see chapter 3).
Fuel pump not operating	Inspect (see chapter 3).
Fuel pump relay trouble	Inspect and replace (see chapter 3).
Fuel filter or pump screen clogged	Inspect and replace fuel pump (see chapter 3).
Fuel pressure regulator trouble	Inspect fuel pressure and replace fuel pump (see chapter 3).
Fuel line clogged	Inspect and repair (see chapter 3).

Poor Running at Low Speed

Symptoms or Possible Causes	Actions (chapter)
Spark weak:	
Stick coil shorted or not in good contact	Inspect or reinstall (see chapter 16).
Stick coil trouble	Inspect (see chapter 16).
Spark plug dirty, broken or gap maladjusted	Inspect and replace (see chapter 2).
Spark plug incorrect	Replace it with the correct plug (see chapter 2).
ECU trouble	Inspect (see chapter 3).
Fuel/air mixture incorrect:	
Little fuel in tank	Supply fuel (see Owner's Manual).
Air cleaner clogged, poorly sealed, or missing	Clean element or inspect sealing (see chapter 2).
Air duct loose	Reinstall (see chapter 3).
Throttle body assy holder loose	Reinstall (see chapter 3).
Throttle body assy dust seal damage	Replace (see chapter 3).
Fuel injector O-ring damage	Replace (see chapter 3).
Fuel filter or pump screen clogged	Inspect and replace fuel pump (see chapter 3).

DFI System Troubleshooting Guide

Symptoms or Possible Causes	Actions (chapter)
Fuel pressure regulator trouble	Inspect fuel pressure and replace fuel pump (see chapter 3).
Fuel line clogged	Inspect and repair (see chapter 3).
Intake air pressure sensor trouble	Inspect (see chapter 3).
Atmospheric pressure sensor trouble	Inspect (see chapter 3).
Water temperature sensor trouble	Inspect (see chapter 3).
Intake air temperature sensor trouble	Inspect (see chapter 3).
Main throttle sensor trouble	Inspect (see chapter 3).
Subthrottle sensor trouble	Inspect (see chapter 3).
Subthrottle valve actuator trouble	Inspect (see chapter 3).
Unstable (rough) idling:	
Fuel pressure too low or too high	Inspect (see chapter 3).
Fuel injector trouble	Inspect (see chapter 3).
Main throttle sensor trouble	Inspect (see chapter 3).
Subthrottle sensor trouble	Inspect (see chapter 3).
Subthrottle valve actuator trouble	Inspect (see chapter 3).
Engine vacuum not synchronizing	Inspect and adjust (see chapter 2).
Intake air pressure sensor trouble	Inspect (see chapter 3).
Atmospheric pressure sensor trouble	Inspect (see chapter 3).
Water temperature sensor trouble	Inspect (see chapter 3).
Intake air temperature sensor trouble	Inspect (see chapter 3).
Engine stalls easily:	
Spark plug dirty, broken or gap maladjusted	Inspect and replace (see chapter 2).
Stick coil trouble	Inspect (see chapter 16).
Camshaft position sensor trouble	Inspect (see chapter 16).
Main throttle sensor trouble	Inspect (see chapter 3).
Subthrottle sensor trouble	Inspect (see chapter 3).
Subthrottle valve actuator trouble	Inspect (see chapter 3).
Intake air pressure sensor trouble	Inspect (see chapter 3).
Atmospheric pressure sensor trouble	Inspect (see chapter 3).
Water temperature sensor trouble	Inspect (see chapter 3).
Intake air temperature sensor trouble	Inspect (see chapter 3).
Fuel pump trouble	Inspect (see chapter 3).
Fuel injector trouble	Inspect (see chapter 3).
Fuel pressure too low or too high	Inspect (see chapter 3).
Fuel pressure regulator trouble	Inspect fuel pressure and replace fuel pump (see chapter 3).
Fuel line clogged	Inspect and repair (see chapter 3).
Poor acceleration:	
Fuel pressure too low	Inspect (see chapter 3).
Water or foreign matter in fuel	Change fuel. Inspect and clean fuel system (see chapter 3).
Fuel filter or pump screen clogged	Inspect and replace fuel pump (see chapter 3).
Fuel pump trouble	Inspect (see chapter 3).
Fuel injector trouble	Inspect (see chapter 3).

DFI System Troubleshooting Guide

Symptoms or Possible Causes	Actions (chapter)
Main throttle sensor trouble	Inspect (see chapter 3).
Subthrottle sensor trouble	Inspect (see chapter 3).
Subthrottle valve actuator trouble	Inspect (see chapter 3).
Intake air pressure sensor trouble	Inspect (see chapter 3).
Atmospheric pressure sensor trouble	Inspect (see chapter 3).
Water temperature sensor trouble	Inspect (see chapter 3).
Intake air temperature sensor trouble	Inspect (see chapter 3).
Spark plug dirty, broken or gap maladjusted	Inspect and replace (see chapter 2).
Stick coil trouble	Inspect (see chapter 16).
Stumble:	
Fuel pressure too low	Inspect (see chapter 3).
Fuel injector trouble	Inspect (see chapter 3).
Main throttle sensor trouble	Inspect (see chapter 3).
Subthrottle sensor trouble	Inspect (see chapter 3).
Subthrottle valve actuator trouble	Inspect (see chapter 3).
Intake air pressure sensor trouble	Inspect (see chapter 3).
Atmospheric pressure sensor trouble	Inspect (see chapter 3).
Water temperature sensor trouble	Inspect (see chapter 3).
Intake air temperature sensor trouble	Inspect (see chapter 3).
Surge:	
Unstable fuel pressure	Fuel pressure regulator trouble (Inspect and replace fuel pump) or kinked fuel line (Inspect and replace fuel pump) (see chapter 3).
Fuel injector trouble	Inspect (see chapter 3).
Water temperature sensor trouble	Inspect (see chapter 3).
Backfiring when deceleration:	
Spark plug dirty, broken or gap maladjusted	Inspect and replace (see chapter 2).
Fuel pressure too low	Inspect (see chapter 3).
Fuel pump trouble	Inspect (see chapter 3).
Main throttle sensor trouble	Inspect (see chapter 3).
Subthrottle sensor trouble	Inspect (see chapter 3).
Subthrottle valve actuator trouble	Inspect (see chapter 3).
Intake air pressure sensor trouble	Inspect (see chapter 3).
Atmospheric pressure sensor trouble	Inspect (see chapter 3).
Water temperature sensor trouble	Inspect (see chapter 3).
Intake air temperature sensor trouble	Inspect (see chapter 3).
Air switching valve trouble	Inspect and replace (see chapter 16).
Air suction valve trouble	Inspect and replace (see chapter 5).
After fire:	
Spark plug burned or gap maladjusted	Replace (see chapter 2).
Fuel injector trouble	Inspect (see chapter 3).
Intake air pressure sensor trouble	Inspect (see chapter 3).
Atmospheric pressure sensor trouble	Inspect (see chapter 3).
Water temperature sensor trouble	Inspect (see chapter 3).

DFI System Troubleshooting Guide

Symptoms or Possible Causes	Actions (chapter)
Intake air temperature sensor trouble	Inspect (see chapter 3).
Other:	
Intermittent any DFI fault and its recovery	Check that DFI connectors are clean and tight, and examine leads for signs of burning or fraying (see chapter 3).

Poor Running or No Power at High Speed

Symptoms or Possible Causes	Actions (chapter)
Firing incorrect:	
Stick coil shorted or not in good contact	Inspect or Reinstall (see chapter 16).
Stick coil trouble	Inspect (see chapter 16).
Spark plug dirty, broken or gap maladjusted	Inspect and replace (see chapter 2).
Spark plug incorrect	Replace it with the correct plug (see chapter 2).
ECU trouble	Inspect (see chapter 3).
Fuel/air mixture incorrect:	
Air cleaner clogged, poorly sealed, or missing	Clean element or inspect sealing (see chapter 2).
Air duct loose	Reinstall (see chapter 3).
Throttle body assy holder loose	Reinstall (see chapter 3).
Throttle body assy dust seal damage	Replace (see chapter 3).
Water or foreign matter in fuel	Change fuel. Inspect and clean fuel system (see chapter 3).
Fuel injector O-ring damage	Replace (see chapter 3).
Fuel injector clogged	Inspect and repair (see chapter 3).
Fuel line clogged	Inspect and repair (see chapter 3).
Fuel pump operates intermittently and often DFI fuse blows.	Fuel pump bearings may wear. Replace the fuel pump (see chapter 3).
Fuel pump trouble	Inspect (see chapter 3).
Intake air pressure sensor trouble	Inspect (see chapter 3).
Cracked or obstructed intake air pressure sensor hose	Inspect and repair or replace (see chapter 3).
Atmospheric pressure sensor trouble	Inspect (see chapter 3).
Water temperature sensor trouble	Inspect (see chapter 3).
Intake air temperature sensor trouble	Inspect (see chapter 3).
Main throttle sensor trouble	Inspect (see chapter 3).
Subthrottle sensor trouble	Inspect (see chapter 3).
Subthrottle valve actuator trouble	Inspect (see chapter 3).
Knocking:	
Fuel poor quality or incorrect	Fuel change (Use the gasoline recommended in the Owner's Manual).
Spark plug incorrect	Replace it with the correct plug (see chapter 2).
Stick coil trouble	Inspect (see chapter 16).
ECU trouble	Inspect (see chapter 3).
Engine vacuum not synchronizing	Inspect and adjust (see chapter 2).
Intake air pressure sensor trouble	Inspect (see chapter 3).
Atmospheric pressure sensor trouble	Inspect (see chapter 3).

DFI System Troubleshooting Guide

Symptoms or Possible Causes	Actions (chapter)
Water temperature sensor trouble	Inspect (see chapter 3).
Intake air temperature sensor trouble	Inspect (see chapter 3).
Miscellaneous:	
Subthrottle sensor trouble	Inspect (see chapter 3).
Subthrottle valve actuator trouble	Inspect (see chapter 3).
Speed sensor trouble	Inspect (see chapter 3).
Throttle valves will not fully open	Inspect throttle cables and lever linkage (see chapter 3).
Engine overheating - Water temperature sensor, crankshaft sensor or speed sensor trouble	(see Overheating of Troubleshooting Guide in chapter 17)
Air switching valve trouble	Inspect and replace (see chapter 16).
Air suction valve trouble	Inspect and replace (see chapter 5).
Exhaust Smokes Excessively:	
(Black smoke)	
Air cleaner element clogged	Clean element (see chapter 2).
Fuel pressure too high	Inspect (see chapter 3).
Fuel injector trouble	Inspect (see chapter 3).
Water temperature sensor trouble	Inspect (see chapter 3).
Intake air temperature sensor trouble	Inspect (see chapter 3).
(Brown smoke)	
Air duct loose	Reinstall (see chapter 3).
Fuel pressure too low	Inspect (see chapter 3).
Water temperature sensor trouble	Inspect (see chapter 3).
Intake air temperature sensor trouble	Inspect (see chapter 3).

Self-Diagnosis

The warning indicator light (LED) [A] is used for the FI indicator, immobilizer indicator and oil pressure warning indicator.

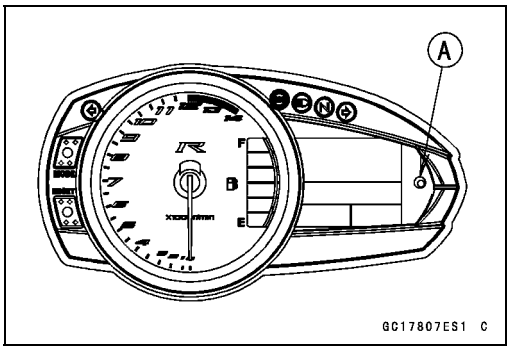

Self-diagnosis Outline

The self-diagnosis system has two modes and can be switched to another mode by operating the meter unit.

User Mode

The ECU notifies the rider of troubles in DFI system, ignition system and immobilizer system by blinking the warning indicator light (LED) [A], FI warning symbol [B] and immobilizer warning symbol [C] when DFI, ignition and immobilizer system parts are faulty, and initiates fail-safe function. In case of serious troubles ECU stops the injection/ignition/starter motor operation.

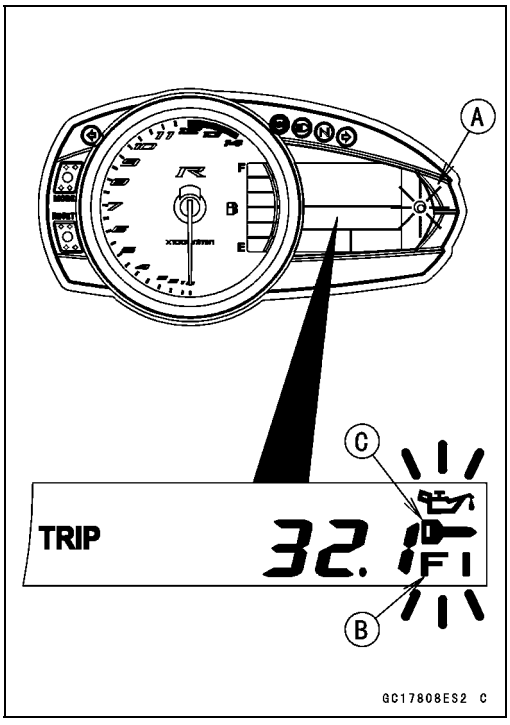

Self-Diagnosis

Dealer Mode

The LCD (Liquid Crystal Display) display the service code(s) [A] to show the problem(s) which the DFI system, ignition system and immobilizer system has at the moment of diagnosis.

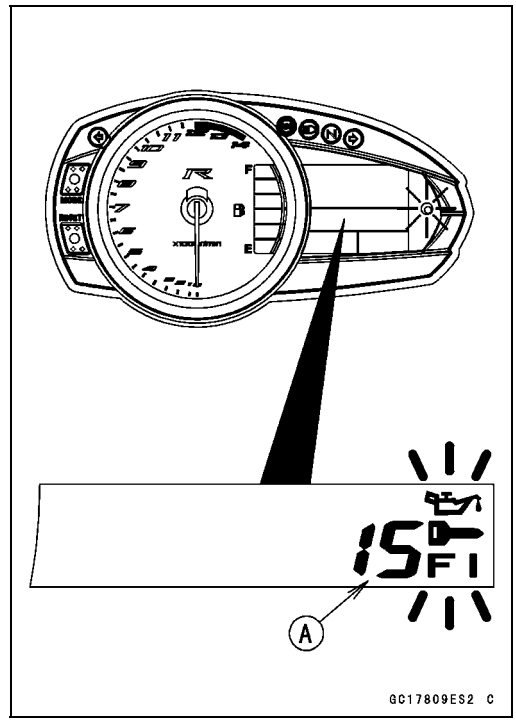

Self-diagnosis Procedures

○When a problem occurs with the DFI system and ignition system, the warning indicator light (LED) [A] and FI warning symbol [B] blinks.

○When a problem occurs with the system, the warning indicator light (LED) and immobilizer warning symbol [C] blinks.

NOTE

○*Use a fully charged battery when conducting self-diagnosis. Otherwise, the light (LED) and symbol blinks very slowly or do not blink.*

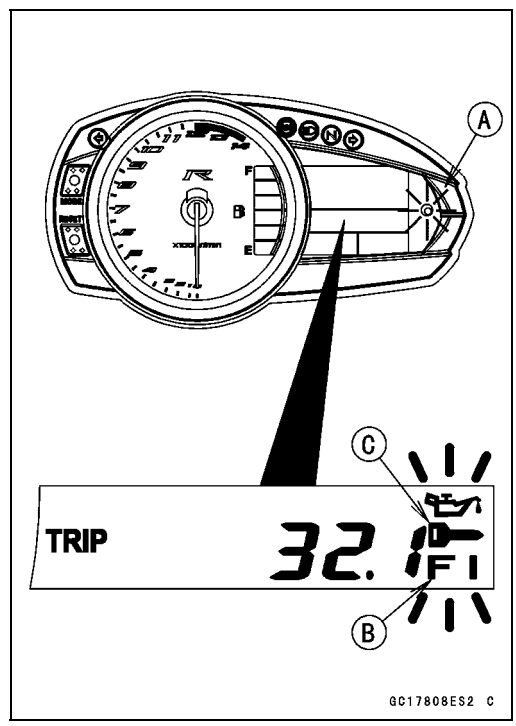

Self-Diagnosis

- Turn the ignition switch ON.
- Push the MODE button [A] to display the odometer.

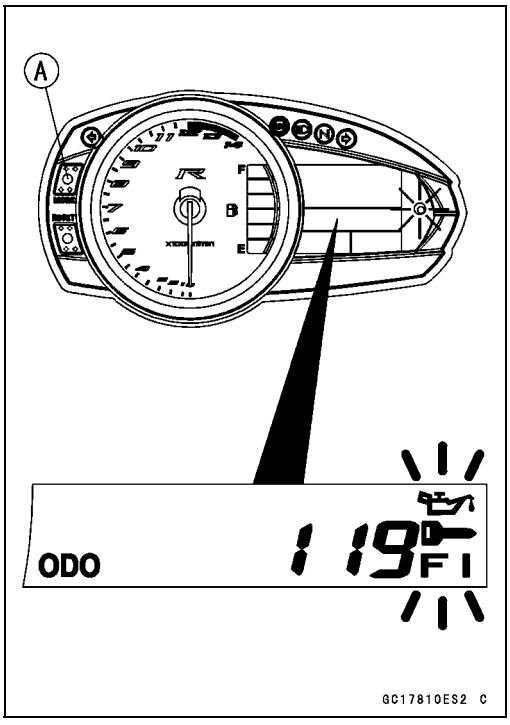

- Push the MODE button [A] for more than two seconds.
- The service code [B] is displayed on the LCD by the number of two digits.

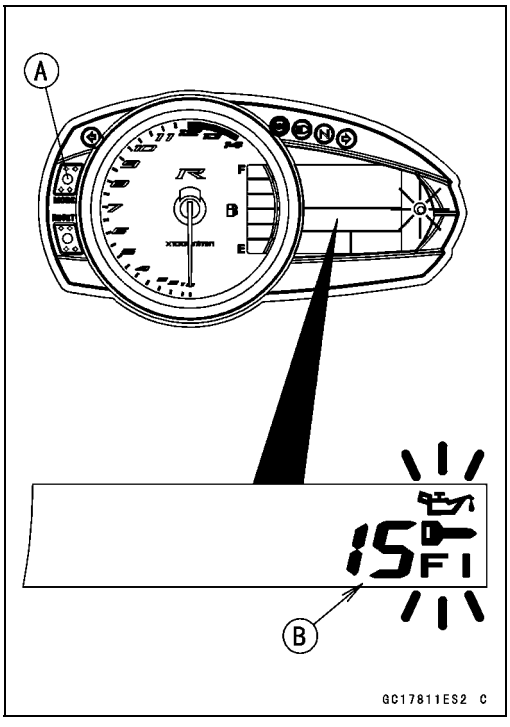

- Any of the following procedures ends self-diagnosis.

○When the service code is displayed on the LCD, push the MODE button for more than two seconds.

○When the ignition switch is turned OFF.

Self-Diagnosis

Self-Diagnosis Flow Chart

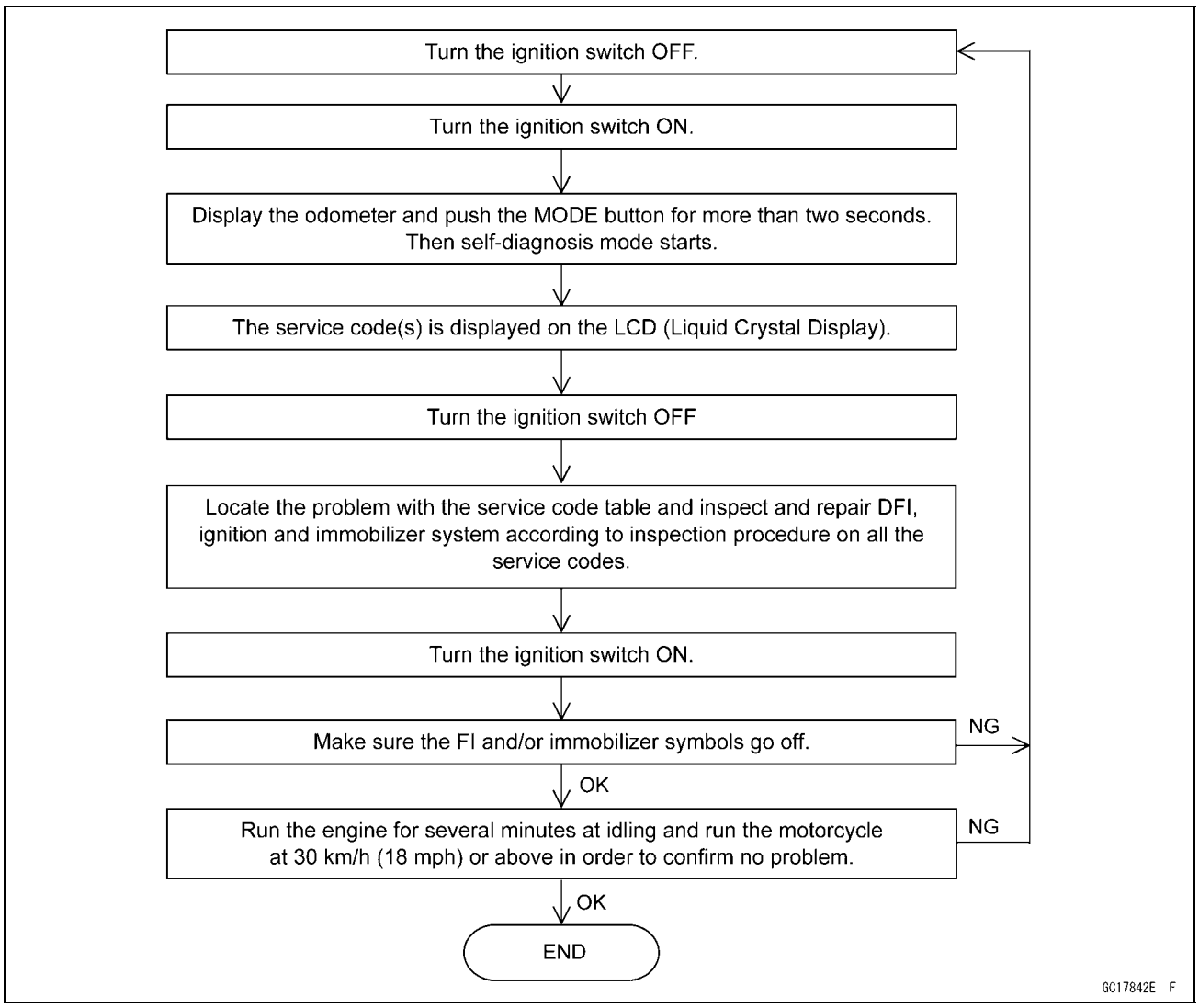

Self-Diagnosis

Service Code Reading

○The service code(s) is displayed on the LCD by the number of two digits.

○When there are a number of problems, all the service codes can be stored and the display will begin starting from the lowest number service code in the numerical order.

○Then after completing all codes, the display is repeated until the ignition switch is turned OFF or MODE button is pushed for more than two seconds.

○For example, if three problems occurred in the order of 56, 15, 35, the service codes are displayed (each two seconds) from the lowest number in the order listed as shown below. (15→35→56)→(15→35→56)→· · ·(repeated)

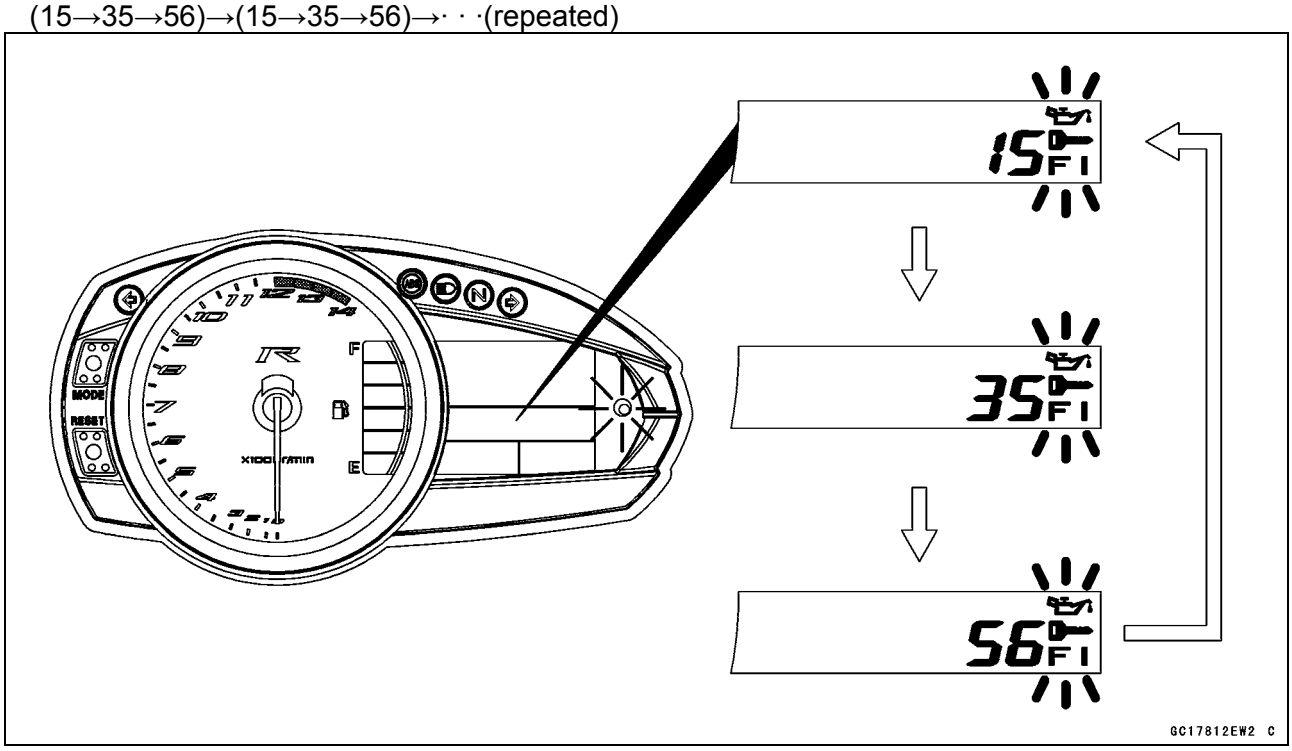

○If there is no problem or when the repair has been done, FI and/or immobilizer symbols go off and service code is not displayed.

Service Code Erasing

○When repair has been done, FI and/or immobilizer warning symbols go off and service code is not displayed.

★But the service codes stored in memory of the ECU are not erased to preserve the problem history. In this model, the problem history can not be erased.

Self-Diagnosis

Service Code Table

Service Code	Problems
11	Main throttle sensor malfunction, wiring open or short
12	Intake air pressure sensor malfunction, wiring open or short
13	Intake air temperature sensor malfunction, wiring open or short
14	Water temperature sensor malfunction, wiring open or short
15	Atmospheric pressure sensor malfunction, wiring open or short
21	Crankshaft sensor malfunction, wiring open or short
23	Camshaft position sensor malfunction, wiring open or short
24 and **25**	Speed sensor malfunction, wiring open or short First 24 is displayed and then 25, repeatedly
31	Vehicle-down sensor malfunction, wiring open or short
32	Subthrottle sensor malfunction, wiring open or short
33	Oxygen sensor inactivation, wiring open or short
34	Exhaust butterfly valve actuator sensor malfunction, wiring open or short
35	Immobilizer amplifier malfunction
36	Blank Key detection
39	ECU communication error
51	Stick coil #1 malfunction, wiring open or short
52	Stick coil #2 malfunction, wiring open or short
53	Stick coil #3 malfunction, wiring open or short
54	Stick coil #4 malfunction, wiring open or short
56	Radiator fan relay malfunction, wiring open or short
62	Subthrottle valve actuator malfunction, wiring open or short
63	Exhaust butterfly valve actuator malfunction, wiring open or short
64	Air switching valve malfunction, wiring open or short
67	Oxygen sensor heater malfunction, wiring open or short
94	Oxygen sensor malfunction, wiring open or short

Notes:

○The ECU may be involved in these problems. If all the parts and circuits checked out good, be sure to check the ECU for ground and power supply. If the ground and power supply are checked good, replace the ECU.

○When no service code is displayed, the electrical parts of the DFI system has no fault, and the mechanical parts of the DFI system and the engine are suspect.

Self-Diagnosis

Backups

○The ECU takes the following measures to prevent engine damage when the DFI, ignition or immobilizer system parts have troubles.

Service Codes	Parts	Output Signal Usable Range or Criteria	Backups by ECU
11	Main Throttle Sensor	Output Voltage 0.2 ~ 4.8 V	If the main throttle sensor system fails (the output voltage is out of the usable range, wiring short or open), the ECU locks ignition timing into the ignition timing at closed throttle position and sets the DFI in the D-J method.
12	Intake Air Pressure Sensor	Intake Air Pressure (Absolute) Pv = 100 ~ 900 mmHg	If the intake air pressure sensor system fails (the signal is out of the usable range, wiring short or open), the ECU sets the DFI in the α-N method (1).
13	Intake Air Temperature Sensor	Intake Air Temperature Ta = – 47 ~ + 178°C	If the intake air temperature sensor system fails (the signal is out of the usable range, wiring short or open), the ECU sets Ta at 30°C.
14	Water Temperature Sensor	Water Temperature Tw = – 30 ~ + 120°C	If the water temperature sensor system fails (the signal is out of the usable range, wiring short or open), the ECU sets Tw at 80°C. When an radiator fan is turning on, ECU sets Tw at 110°C.
15	Atmospheric Pressure Sensor	Atmospheric Pressure (Absolute) Pa = 100 ~ 900 mmHg	If the atmospheric pressure sensor system fails (the signal is out of the usable range, wiring short or open), the ECU sets Pa at 760 mmHg (the standard atmospheric pressure).
21	Crankshaft Sensor	Crankshaft sensor must send 22 signals to the ECU at the 1 cranking.	If the crankshaft sensor generates less than 22 or more signals, the engine stops by itself.
23	Camshaft Position Sensor	Camshaft position sensor must send 1 signal to the ECU at the 2 crankings.	If the camshaft position sensor system fails (the signal is missing, wiring short or open), the ECU continues to ignite cylinders in the same sequence following the last good signal.
24 and **25**	Speed Sensor	Speed sensor must send 23 signals to the ECU at the one rotation of the drive shaft. The gear position is decided by the signal of the speed sensor.	If the speed sensor system fails (no signal, wiring short or open), the speedometer shows 0, and the ECU sets the top (6) gear position.
31	Vehicle -down Sensor	Output Voltage 0.65 ~ 4.45 V	If the vehicle-down sensor system has failures (the output voltage is out of the usable range, wiring short or open), the ECU shuts off the fuel pump relay, the fuel injectors and the ignition system.
32	Subthrottle Sensor	Output Voltage 0.15 ~ 4.85 V	If the subthrottle sensor system fails (the output voltage is out of the usable range, wiring short or open), the ECU drive the subthrottle valve to the full closed position, and it stops the current to the subthrottle valve actuator.

Self-Diagnosis

Service Codes	Parts	Output Signal Usable Range or Criteria	Backups by ECU
33	Oxygen Sensor	The oxygen sensor is active and sensor must send signals (output voltage) continuously to the ECU.	If the oxygen sensor is not activated, the ECU stops the feedback mode of the oxygen sensor.
34	Exhaust Butterfly Valve Actuator Sensor	Output Voltage 0.1 ~ 4.8 V	If the exhaust butterfly valve sensor system fails (the output voltage is out of the usable range, wiring short or open), the ECU locks the exhaust butterfly valve at full open position near, and it stops the current to the exhaust butterfly valve actuator.
35	Immobilizer Amplifier	–	If the immobilizer system fails (no signal, wiring short or open), the vehicle is no start and run.
36	Ignition Key	The ignition key must use register key.	If the blank key or broken key is used, the vehicle is no start and run.
39	ECU	The ECU send the data (for service code and key registration) to the meter unit.	–
51	Stick Coil #1*	The stick coil primary winding must send signals 20 or more times continuously to the ECU.	If the stick coil #1 primary winding has failures (no signal, wiring short or open), the ECU shuts off the injector #1 to stop fuel to the cylinder #1, though the engine keeps running.
52	Stick Coil #2*	The stick coil primary winding must send signals 20 or more times continuously to the ECU.	If the stick coil #2 primary winding has failures (no signal, wiring short or open), the ECU shuts off the injector #2 to stop fuel to the cylinder #2, though the engine keeps running.
53	Stick Coil #3*	The stick coil primary winding must send signals 20 or more times continuously to the ECU.	If the stick coil #3 primary winding has failures (no signal, wiring short or open), the ECU shuts off the injector #3 to stop fuel to the cylinder #3, though the engine keeps running.
54	Stick Coil #4*	The stick coil primary winding must send signals 20 or more times continuously to the ECU.	If the stick coil #4 primary winding has failures (no signal, wiring short or open), the ECU shuts off the injector #4 to stop fuel to the cylinder #4, though the engine keeps running.
56	Radiator Fan Relay	When the relay OFF condition, the fan relay is open.	–
62	Subthrottle Valve Actuator	The actuator operates open and close of the subthrottle valve by the pulse signal from the ECU.	If the subthrottle valve actuator fails (the signal is out to the usable range, wiring short or open), the ECU stops the current to the actuator.
63	Exhaust Butterfly Valve Actuator	The actuator operates open and close of the exhaust butterfly valve by the pulse signal from the ECU.	If the exhaust butterfly valve actuator fails (the signal is out to the usable range, wiring short or open), the ECU stops the current to the actuator.

Self-Diagnosis

Service Codes	Parts	Output Signal Usable Range or Criteria	Backups by ECU
64	Air Switching Valve	The air switching valve controls the flow of the secondary air by opening and shutting the solenoid valve.	–
67	Oxygen Sensor Heater	The oxygen sensor heater raise temperature of the sensor for its earlier activation. 12 V-6.6 W, 0.55 A	If the oxygen sensor heater fails (wiring short or open), the ECU stops the current to the heater, and it stops the feedback mode of the oxygen sensor.
94	Oxygen Sensor	The oxygen sensor must send signals (output voltage) continuously to the ECU	If the oxygen sensor output voltage is incorrect, the ECU stops the feedback mode of the oxygen sensor.

Note:

(1) α-N Method: the DFI control method from medium to heavy engine load. When the engine load is light like at idling or low speed, the ECU determines the injection quantity by calculating from the throttle vacuum (intake air pressure sensor output voltage) and engine speed (crankshaft sensor output voltage). This method is called D-J method. As the engine speed increases, and the engine load turns middle to heavy, the ECU determines the injection quantity by calculating from the throttle opening (main throttle sensor output voltage) and the engine speed. This method is called α-N method.

*: This depends on the number of stopped cylinders.

Main Throttle Sensor (Service Code 11)

The main throttle sensor is a rotating variable resistor that change output voltage according to throttle operating. The ECU senses this voltage change and determines fuel injection quantity, and ignition timing according to engine rpm, and throttle opening.

Input Terminal [A]
Output Terminal [B]
Ground Terminal [C]

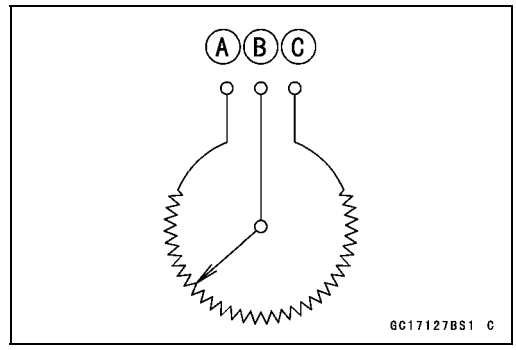

Main Throttle Sensor Removal/Adjustment

NOTICE

Do not remove or adjust the main throttle sensor [A] since it has been adjusted and set with precision at the factory.
Never drop the throttle body assy especially on a hard surface. Such a shock to the main throttle sensor can damage it.

Main Throttle Sensor Input Voltage Inspection

NOTE

○*Be sure the battery is fully charged.*

- Turn the ignition switch OFF.
- Disconnect the main throttle sensor connector and connect the harness adapter [A] between these connectors.

Special Tool - Throttle Sensor Setting Adapter: 57001-1538

- Connect a digital meter to the harness adapter leads.

Main Throttle Sensor Input Voltage
Connections to Adapter:
Digital Meter (+) → BK (sensor BL) lead
Digital Meter (–) → W (sensor BR/BK) lead

- Measure the input voltage with the engine stopped and with the connector joined.
- Turn the ignition switch ON.

Input Voltage
Standard: DC 4.75 ~ 5.25 V

- Turn the ignition switch OFF.

★If the reading is within the standard, check the output voltage (see Main Throttle Sensor Output Voltage Inspection).

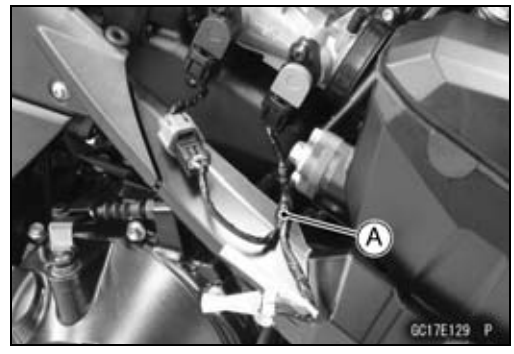

Main Throttle Sensor (Service Code 11)

★If the reading is out of the standard, remove the ECU and check the wiring for continuity between main harness connectors.

○Disconnect the ECU and sensor connectors.

Wiring Inspection
ECU Connector [A] ←→
Main Throttle Sensor Connector [B]
BL lead (ECU terminal 10) [C]
BR/BK lead (ECU terminal 28) [D]

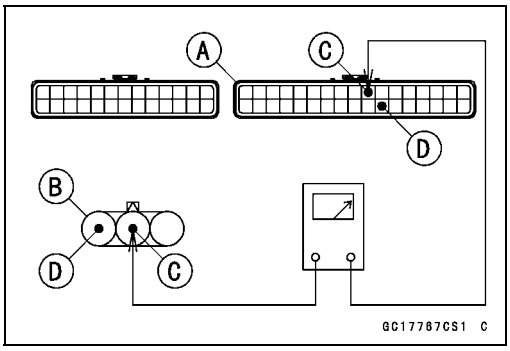

★If the wiring is good, check the ECU for its ground and power supply (see ECU Power Supply Inspection).

★If the ground and power supply are good, replace the ECU (see ECU Removal/Installation).

Main Throttle Sensor Output Voltage Inspection

● Measure the output voltage at the main throttle sensor in the same way as input voltage inspection, note the following.

○Disconnect the main throttle sensor connector and connect the harness adapter [A] between these connectors.

Special Tool - Throttle Sensor Setting Adapter: 57001-1538

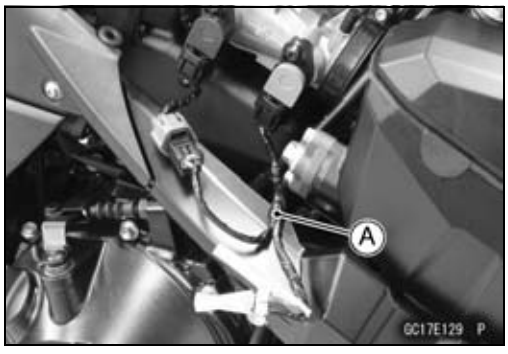

Main Throttle Sensor Output Voltage
Connections to Adapter:
Digital Meter (+) → R (sensor Y/W) lead
Digital Meter (–) → W (sensor BR/BK) lead

● Start the engine and warm it up thoroughly.

● Check idle speed to ensure the throttle opening is correct.

Idle Speed
Standard: 1 100 ±50 r/min (rpm)

★If the idle speed is out of the specified range, adjust it (see Idle Speed Inspection in the Periodic Maintenance chapter).

Main Throttle Sensor (Service Code 11)

- Turn the ignition switch OFF.
- Measure the output voltage with the engine stopped and with the connector joined.
- Turn the ignition switch ON.

Output Voltage
Standard: DC 0.995 ~ 1.025 V at idle throttle opening
DC 4.18 ~ 4.38 V at full throttle opening (for reference)

NOTE

○*Open the throttle, confirm the output voltage will be raise.*
○*The standard voltage refers to the value when the voltage reading at the Input Voltage Inspection shows 5 V exactly.*
○*When the input voltage reading shows other than 5 V, derive a voltage range as follows.*
Example:
In the case of a input voltage of 4.75 V.
0.985 × 4.75 ÷ 5.00 = 0.936 V
1.015 × 4.75 ÷ 5.00 = 0.964 V
Thus, the valid range is 0.936 ~ 0.964 V

- Turn the ignition switch OFF.

★If the reading is out of the standard, check the main throttle sensor resistance (see Main Throttle Sensor Resistance Inspection).

★If the reading is within the standard, remove the ECU and check the wiring for continuity between main harness side connectors.
○Disconnect the ECU and sensor connectors.

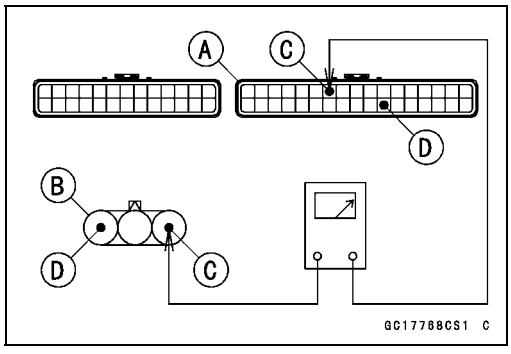

Wiring Inspection
ECU Connector [A] ←→
Main Throttle Sensor Connector [B]
Y/W lead (ECU terminal 7) [C]
BR/BK lead (ECU terminal 28) [D]

★If the wiring is good, check the ECU for its ground and power supply (see ECU Power Supply Inspection).
★If the ground and power supply are good, replace the ECU (see ECU Removal/Installation).

Main Throttle Sensor Resistance Inspection

- Turn the ignition switch OFF.
- Disconnect the main throttle sensor connector.
- Connect a digital meter [A] to the main throttle sensor connector [B].
- Measure the main throttle sensor resistance.

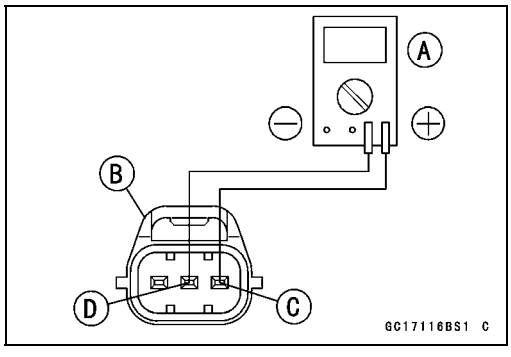

Main Throttle Sensor Resistance
Connections: BR/BK lead [C] ←→ BL lead [D]
Standard: 4 ~ 6 kΩ

★If the reading is out of the standard, replace the throttle body assy.
★If the reading is within the standard, but the problem still exists, replace the ECU (see ECU Removal/Installation).

Main Throttle Sensor (Service Code 11)

Main Throttle Sensor Circuit

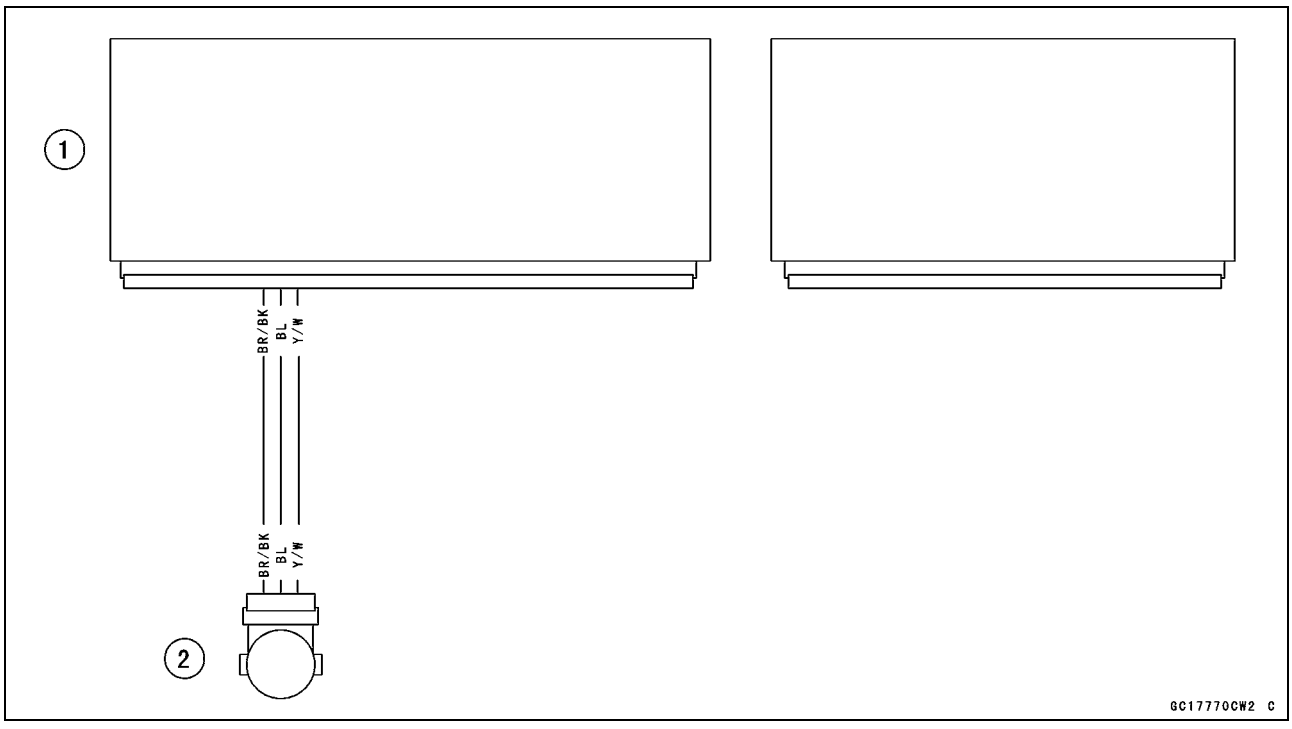

1. ECU
2. Main Throttle Sensor

Intake Air Pressure Sensor (Service Code 12)

Intake Air Pressure Sensor Removal

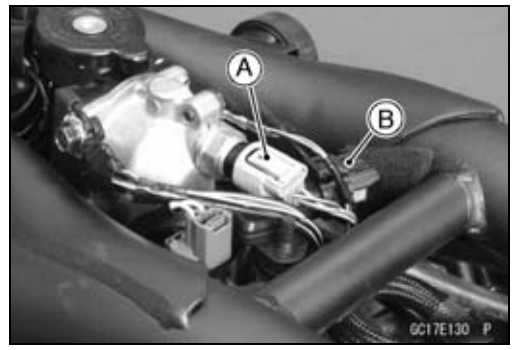

NOTICE

Never drop the intake air pressure sensor especially on a hard surface. Such a shock to the sensor can damage it.

- Remove:
  Fuel Tank (see Fuel Tank Removal)
  Water Temperature Sensor Connector [A] (Disconnect)
  Intake Air Pressure Sensor Connector [B] (Disconnect)

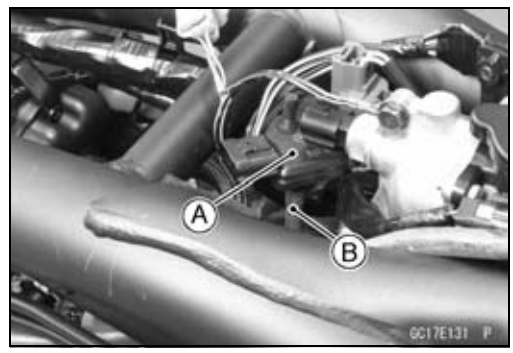

- Remove the intake air pressure sensor [A] from the rubber damper in the frame and separate the vacuum hose [B].

Intake Air Pressure Sensor Installation

NOTE

○*The intake air pressure sensor is the same part as the atmospheric pressure sensor except that the sensor has a vacuum hose and different wiring.*

- Installation is the reverse of removal.

Intake Air Pressure Sensor Input Voltage Inspection

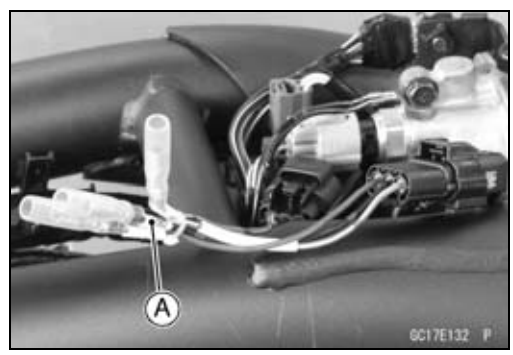

NOTE

○*Be sure the battery is fully charged.*

- Turn the ignition switch OFF.
- Remove the fuel tank (see Fuel Tank Removal).
- Disconnect the intake air pressure sensor connector and connect the harness adapter [A] between these connectors.

Special Tool - Sensor Harness Adapter: 57001-1561

- Connect a digital meter to the harness adapter leads.

Intake Air Pressure Sensor Input Voltage
Connections to Adapter:

Digital Meter (+) → G (sensor BL) lead

Digital Meter (–) → BK (sensor BR/BK) lead

- Measure the input voltage with the engine stopped and with the connector joined.
- Turn the ignition switch ON.

Input Voltage
Standard: DC 4.75 ~ 5.25 V

- Turn the ignition switch OFF.

★If the reading is within the standard, check the output voltage (see Intake Air Pressure Sensor Output Voltage Inspection).

Intake Air Pressure Sensor (Service Code 12)

★If the reading is out of the standard, remove the ECU and check the wiring for continuity between main harness connectors.
○Disconnect the ECU and sensor connectors.

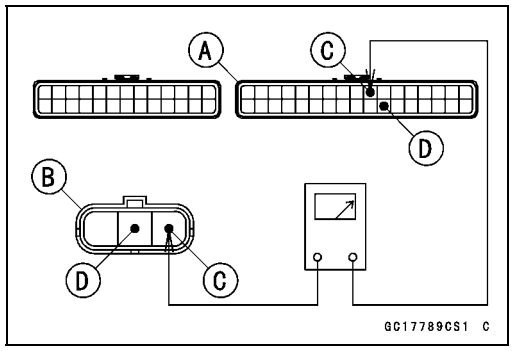

Wiring Inspection
ECU Connector [A] ←→
Intake Air Pressure Sensor Connector [B]
BL lead (ECU terminal 10) [C]
BR/BK lead (ECU terminal 28) [D]

★If the wiring is good, check the ECU for its ground and power supply (see ECU Power Supply Inspection).
★If the ground and power supply are good, replace the ECU (see ECU Removal/Installation).

Intake Air Pressure Sensor Output Voltage Inspection

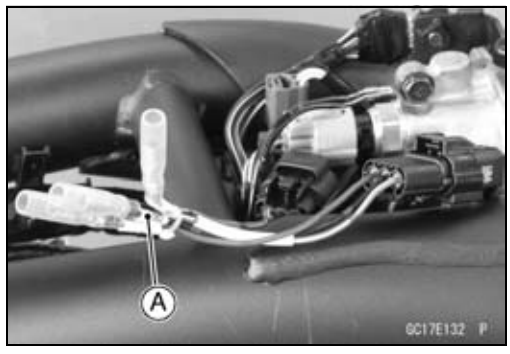

● Measure the output voltage at the intake air pressure sensor in the same way as input voltage inspection, note the following.
○Disconnect the intake air pressure sensor connector and connect the harness adapter [A] between these connectors.

Special Tool - Sensor Harness Adapter: 57001-1561

Intake Air Pressure Sensor Output Voltage
Connections to Adapter:
Digital Meter (+) → G/W (sensor Y/BL) lead
Digital Meter (–) → BK (sensor BR/BK) lead

● Measure the output voltage with the engine stopped and with the connector joined.
● Turn the ignition switch ON.

Output Voltage
Usable Range: **DC 3.80 ~ 4.20 V at standard atmospheric pressure (101.32 kPa, 76 cmHg)**

NOTE

○*The output voltage changes according to local atmospheric pressure.*

● Turn the ignition switch OFF.
★If the reading is out of the usable range, replace the sensor.

★If the reading is within the usable range, remove the ECU and check the wiring for continuity between main harness connector.
○Disconnect the ECU and sensor connectors.

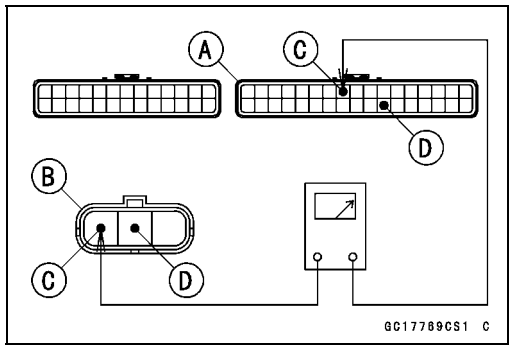

Wiring Inspection
ECU Connector [A] ←→
Intake Air Pressure Sensor Connector [B]
Y/BL lead (ECU terminal 8) [C]
BR/BK lead (ECU terminal 28) [D]

Intake Air Pressure Sensor (Service Code 12)

★If the wiring is good, check the sensor for various vacuum.
- Remove the intake air pressure sensor [A] and disconnect the vacuum hose from the sensor.
- Connect an auxiliary hose [B] to the intake air pressure sensor.
- Temporarily install the intake air pressure sensor.

○Connect a digital meter [C], vacuum gauge [D], the fork oil level gauge [E] and the harness adapter to the intake air pressure sensor.

Special Tools - Fork Oil Level Gauge: 57001-1290
Vacuum Gauge: 57001-1369
Sensor Harness Adapter: 57001-1561

Intake Air Pressure Sensor Output Voltage Connections to Adapter:

Digital Meter (+) → G/W (sensor Y/BL) lead

Digital Meter (–) → BK (sensor BR/BK) lead

○Turn the ignition switch ON.

○Measure the intake air pressure sensor output voltage from various vacuum readings, while pulling the handle of the fork oil level gauge.

○Check the intake air pressure sensor output voltage, using the following formula and chart.

Suppose:
Pg: Vacuum Pressure (Gauge) of Throttle Body
Pl: Local Atmospheric Pressure (Absolute) measured by a barometer
Pv: Vacuum Pressure (Absolute) of Throttle Body
Vv: Sensor Output Voltage (V)

then
Pv = Pl – Pg

For example, suppose the following data is obtained:
Pg = 8 cmHg (Vacuum Gauge Reading)
Pl = 70 cmHg (Barometer Reading)
Vv = 3.2 V (Digital Meter Reading)

then
Pv = 70 – 8 = 62 cmHg (Absolute)

Plot this Pv (62 cmHg) at a point [1] on the chart and draw a vertical line through the point. Then, you can get the usable range [2] of the sensor output voltage.
Usable range = 3.08 ~ 3.48 V
Plot Vv (3.2 V) on the vertical line. → Point [3].

Results: In the chart, Vv is within the usable range and the sensor is normal.

★If the reading is out of the usable range, replace the sensor.

★If the reading is within the usable range, check the ECU for its ground and power supply (see ECU Power Supply Inspection).

★If the ground and power supply are good, replace the ECU (see ECU Removal/Installation).

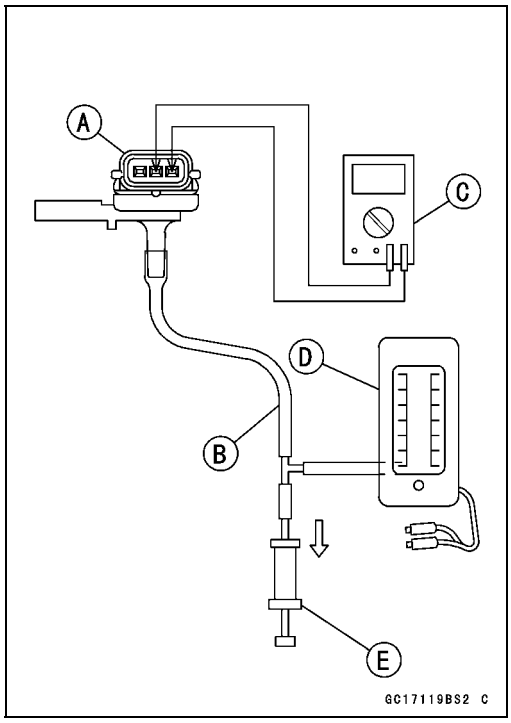

Intake Air Pressure Sensor (Service Code 12)

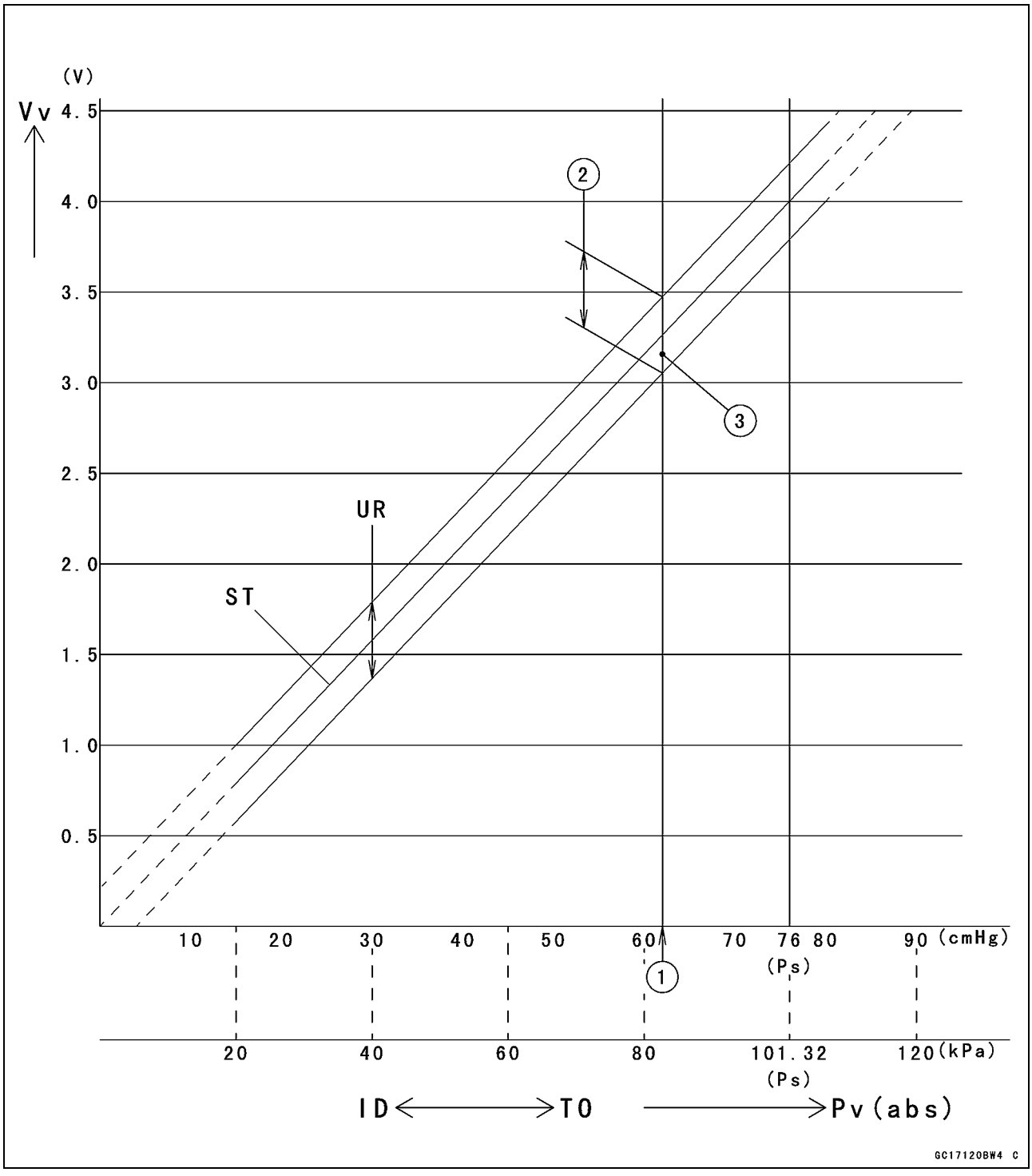

ID: Idling
Ps: Standard Atmospheric Pressure (Absolute)
Pv: Throttle Vacuum Pressure (Absolute)
ST: Standard of Sensor Output Voltage (V)
TO: Throttle Full Open
UR: Usable Range of Sensor Output Voltage (V)
Vv: Intake Air Pressure Sensor Output Voltage (V) (Digital Meter Reading)

Intake Air Pressure Sensor (Service Code 12)

Intake Air Pressure Sensor Circuit

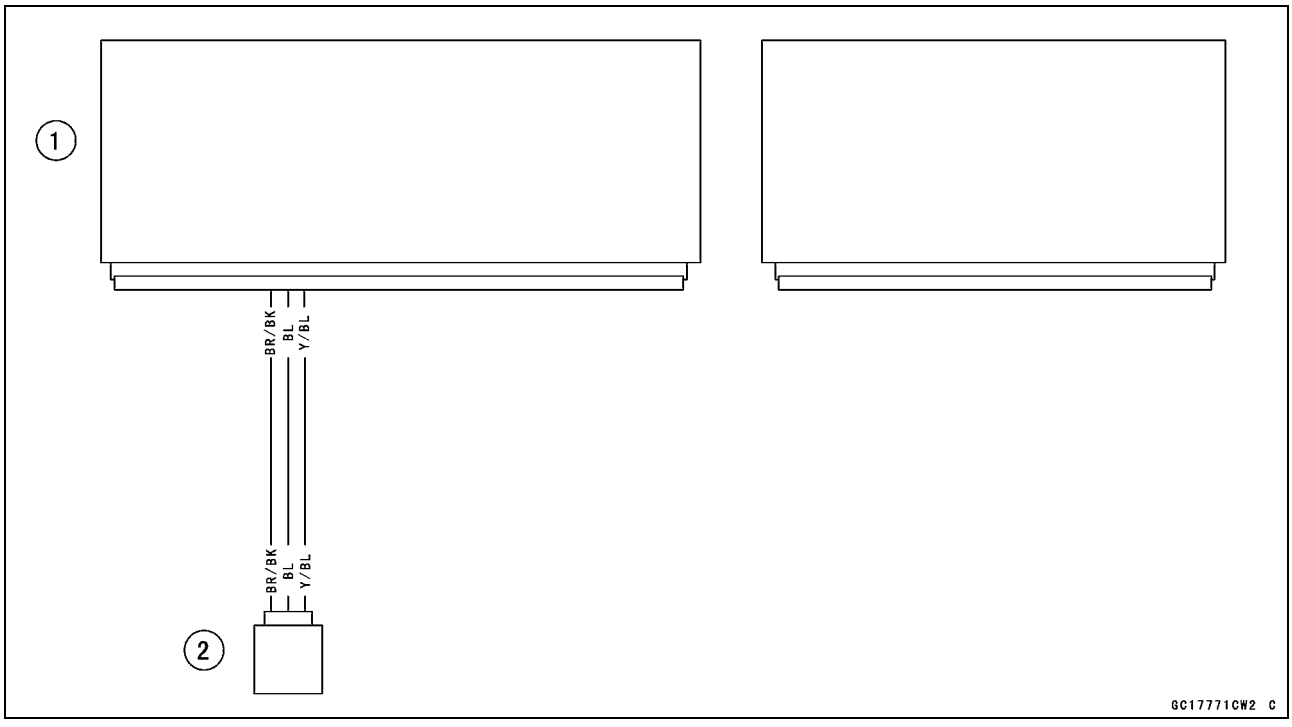

1. ECU
2. Intake Air Pressure Sensor

Intake Air Temperature Sensor (Service Code 13)

Intake Air Temperature Sensor Removal/Installation

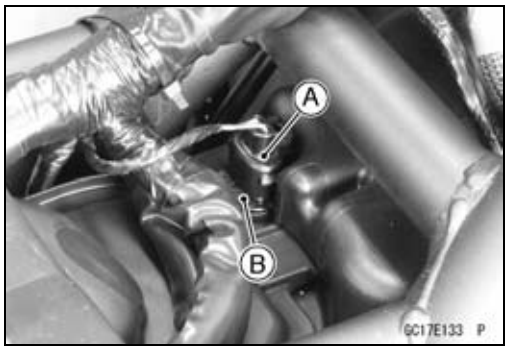

NOTICE

Never drop the intake air temperature sensor especially on a hard surface. Such a shock to the sensor can damage it.

- Remove the fuel tank (see Fuel Tank Removal).
- Disconnect the connector [A] from the intake air temperature sensor [B].
- Pull out the intake air temperature sensor.

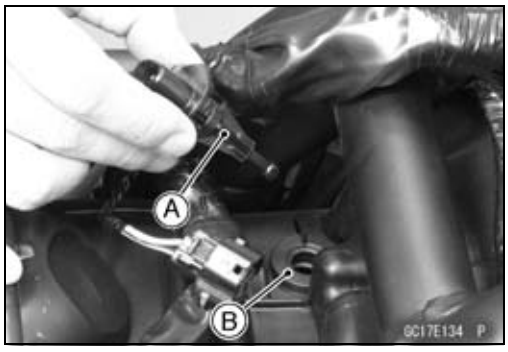

- Insert the intake air temperature sensor [A] into the grommet [B].

Intake Air Temperature Sensor Output Voltage Inspection

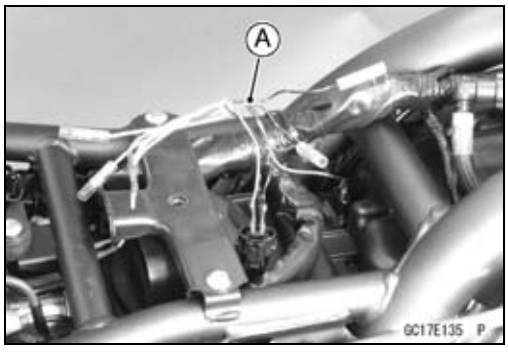

NOTE

○*Be sure the battery is fully charged.*

- Turn the ignition switch OFF.
- Remove the fuel tank (see Fuel Tank Removal).
- Disconnect the intake air temperature sensor connector and connect the harness adapter [A] between these connectors as shown in the figure.
  Main Harness [B]
  Intake Air Temperature Sensor [C]

Special Tool - Measuring Adapter: 57001-1700

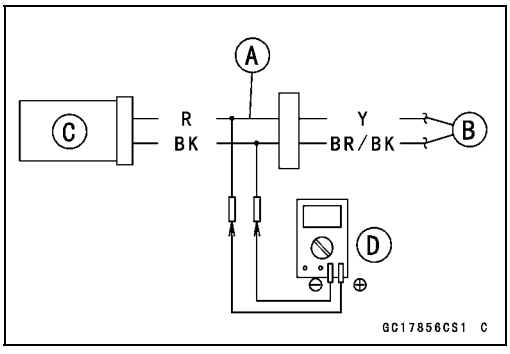

- Connect a digital meter [D] to the harness adapter leads.

Intake Air Temperature Sensor Output Voltage Connections to Adapter:

Digital Meter (+) → R (sensor Y) lead

Digital Meter (–) → BK (sensor BR/BK) lead

- Measure the output voltage with the engine stopped and the connector joined.
- Turn the ignition switch ON.

Output Voltage

Standard: About DC 2.25 ~ 2.50 V at intake air temperature 20°C (68°F)

NOTE

○*The output voltage changes according to the intake air temperature.*

Intake Air Temperature Sensor (Service Code 13)

- Turn the ignition switch OFF.

★If the reading is within the standard, check the ECU for its ground and power supply (see ECU Power Supply Inspection).

★If the ground and power supply are good, replace the ECU (see ECU Removal/Installation).

★If the reading is out of the standard, remove the ECU and check the wiring for continuity between main harness connectors.

○Disconnect the ECU and sensor connectors.

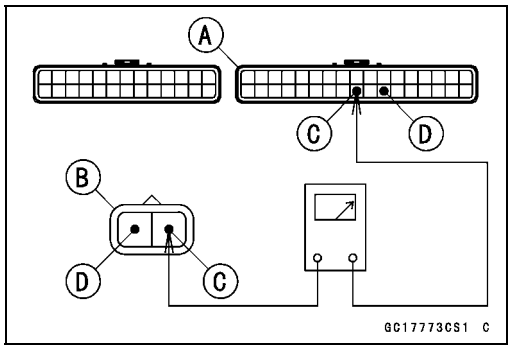

Wiring Inspection

ECU Connector [A] ←→

Intake Air Temperature Sensor Connector [B]

Y lead (ECU terminal 26) [C]

BR/BK lead (ECU terminal 28) [D]

★If the wiring is good, check the intake air temperature sensor resistance (see Intake Air Temperature Sensor Resistance Inspection).

Intake Air Temperature Sensor Resistance Inspection

- Remove the intake air temperature sensor (see Intake Air Temperature Sensor Removal/Installation).
- Suspend the sensor [A] in a container of machine oil so that the heat-sensitive portion is submerged.
- Suspend a thermometer [B] with the heat-sensitive portion [C] located in almost the same depth with the sensor.

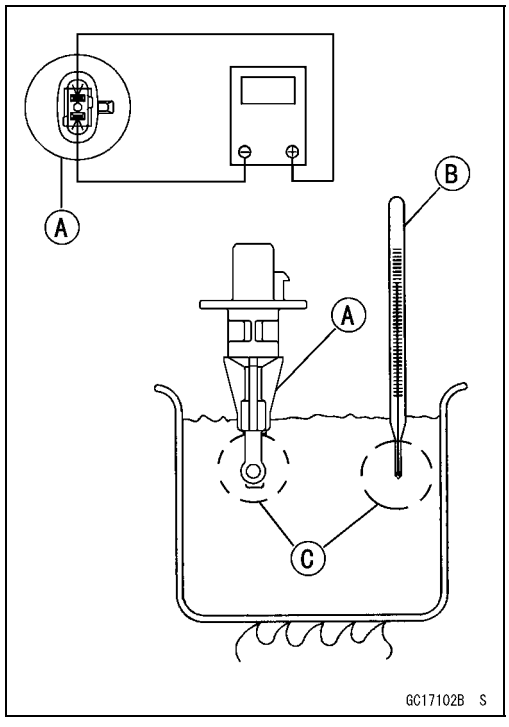

NOTE

○*The sensor and thermometer must not touch the container side or bottom.*

- Place the container over a source of heat and gradually raise the temperature of the oil while stirring the oil gently for even temperature.
- Using a digital meter, measure the internal resistance of the sensor across the terminals at the temperatures shown in the following.

Intake Air Temperature Sensor Resistance

Standard: 2.21 ~ 2.69 kΩ at 20°C (68°F)

About 0.322 kΩ at 80°C (176°F)

★If the reading is out of the standard, replace the sensor.

★If the reading is within the standard, but the problem still exists, replace the ECU (see ECU Removal/Installation).

Intake Air Temperature Sensor (Service Code 13)

Intake Air Temperature Sensor Circuit

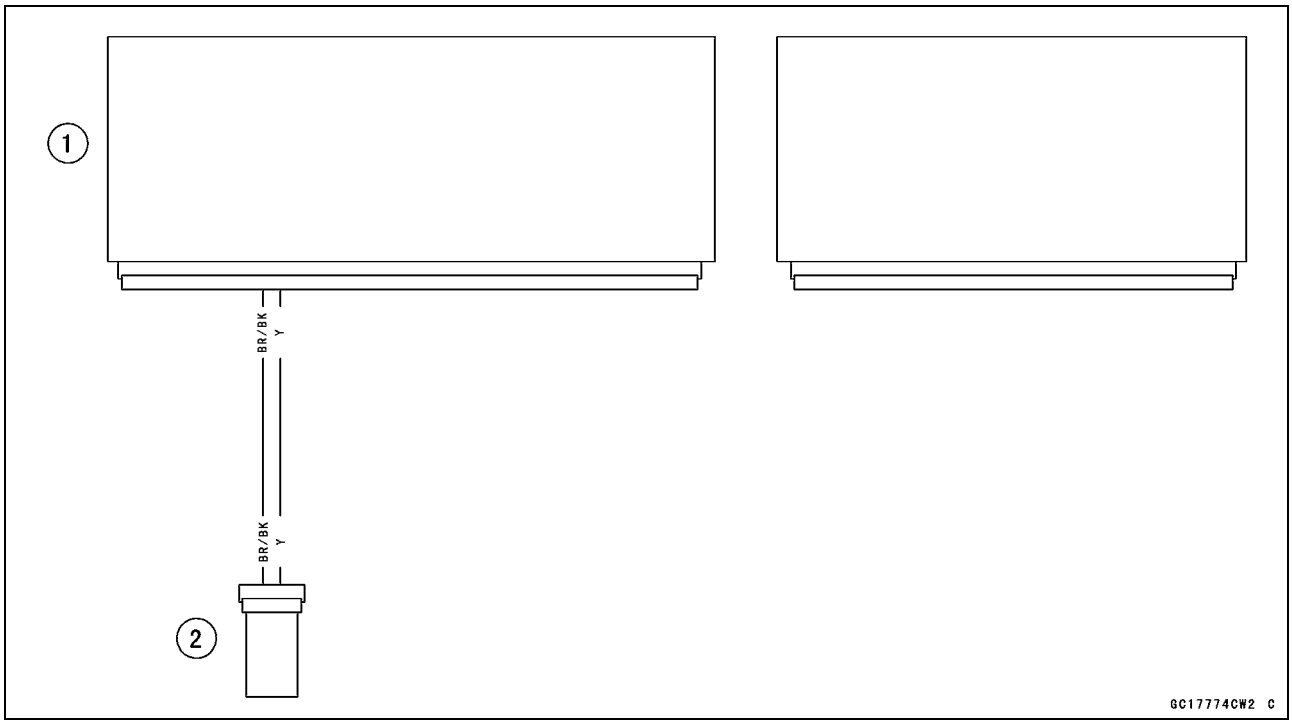

1. ECU
2. Intake Air Temperature Sensor

Water Temperature Sensor (Service Code 14)

Water Temperature Sensor Removal/Installation

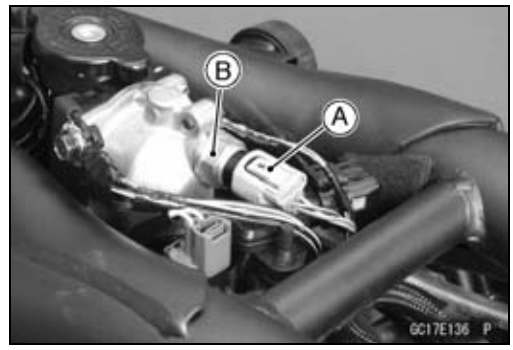

NOTICE

Never drop the water temperature sensor especially on a hard surface. Such a shock to the sensor can damage it.

- Remove:
  Fuel Tank (see Fuel Tank Removal)
  Coolant (Drain, see Coolant Change in the Periodic Maintenance chapter)
  Connector [A] (Disconnect)
  Water Temperature Sensor [B]
- Replace the gasket with a new one, and tighten the water temperature sensor.

  Torque - Water Temperature Sensor: 25 N·m (2.5 kgf·m, 18 ft·lb)
- Fill the engine with coolant and bleed the air from the cooling system (see Coolant Change in the Periodic Maintenance chapter).

Water Temperature Sensor Output Voltage Inspection

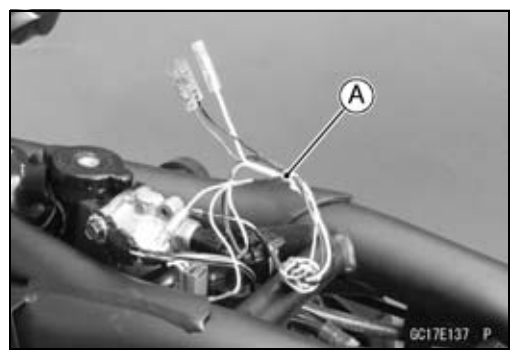

NOTE

○*Be sure the battery is fully charged.*

- Turn the ignition switch OFF.
- Remove the fuel tank (see Fuel Tank Removal).
- Disconnect the water temperature sensor connector and connect the harness adapter [A] between these connectors as shown in the figure.
  Main Harness [B]
  Water Temperature Sensor [C]

  Special Tool - Measuring Adapter: 57001-1700

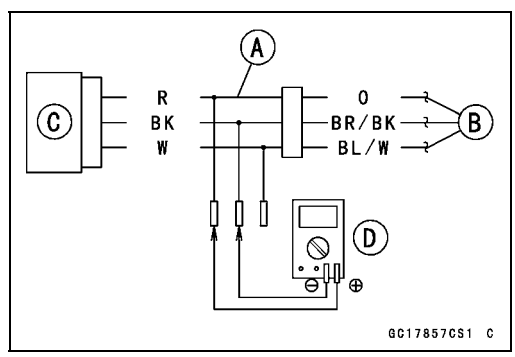

- Connect a digital meter [D] to the harness adapter leads.

  Water Temperature Sensor Output Voltage Connections to Adapter:

  Digital Meter (+) → R (sensor O) lead

  Digital Meter (–) → BK (sensor BR/BK) lead
- Measure the output voltage with the engine stopped and with the connector joined.
- Turn the ignition switch ON.

  Output Voltage
  Standard: About DC 2.80 ~ 2.97 V at 20°C (68°F)

NOTE

○*The output voltage changes according to the coolant temperature in the engine.*

- Turn the ignition switch OFF.

★If the reading is within the standard, check the ECU for its ground and power supply (see ECU Power Supply Inspection).

★If the ground and power supply are good, replace the ECU (see ECU Removal/Installation).

Water Temperature Sensor (Service Code 14)

★If the reading is out of the standard, remove the ECU and check the wiring for continuity between main harness connectors.

○Disconnect the ECU and sensor connectors.

Wiring Inspection

ECU Connector [A] ←→

Water Temperature Sensor Connector [B]

O lead (ECU terminal 9) [C]

BR/BK lead (ECU terminal 28) [D]

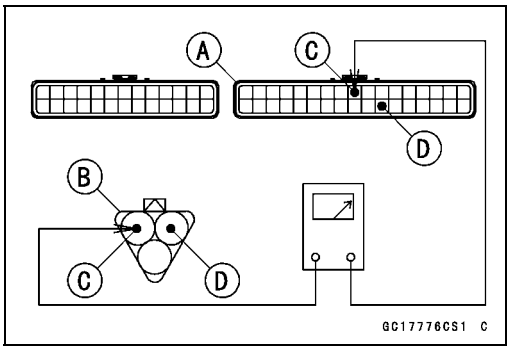

★If the wiring is good, check the water temperature sensor resistance (see Water Temperature Sensor Resistance Inspection).

Water Temperature Sensor Resistance Inspection

● Refer to the Water Temperature Sensor Inspection in the Electrical System chapter.

★If the reading is within the standard, but the problem still exists, replace the ECU (see ECU Removal/Installation).

Water Temperature Sensor Circuit

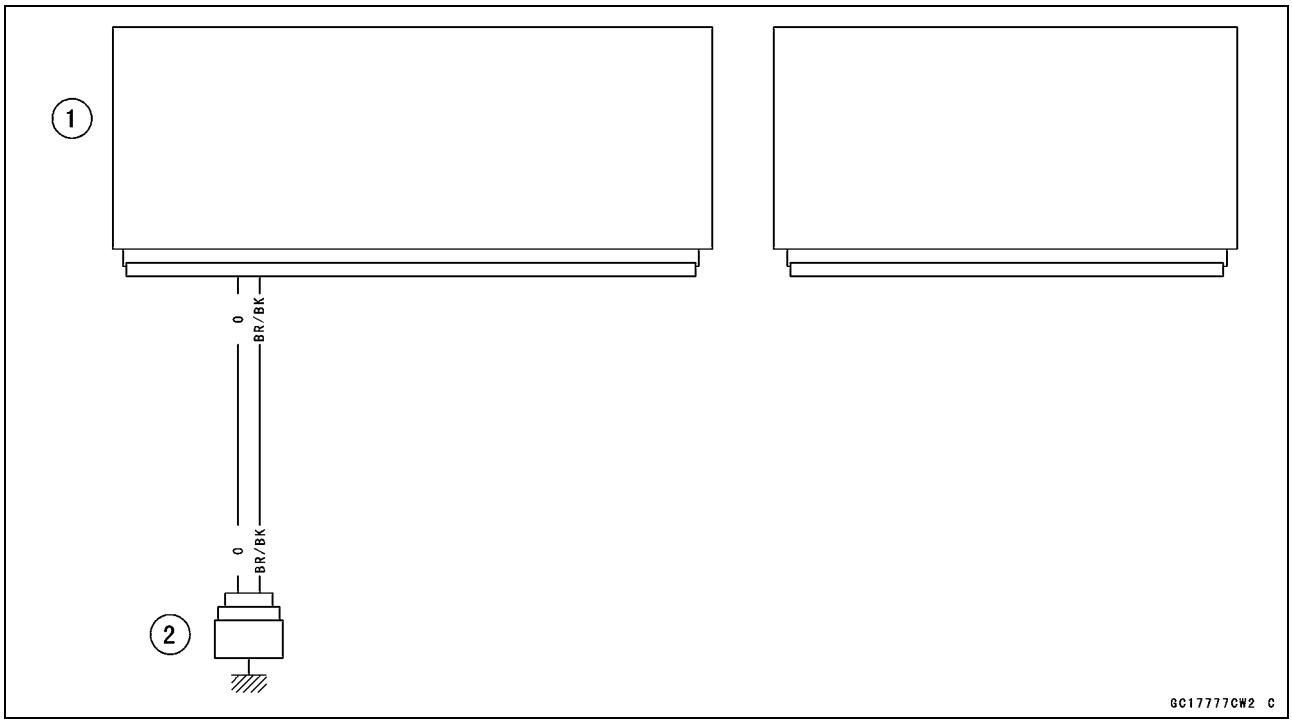

1. ECU
2. Water Temperature Sensor

Atmospheric Pressure Sensor (Service Code 15)

Atmospheric Pressure Sensor Removal

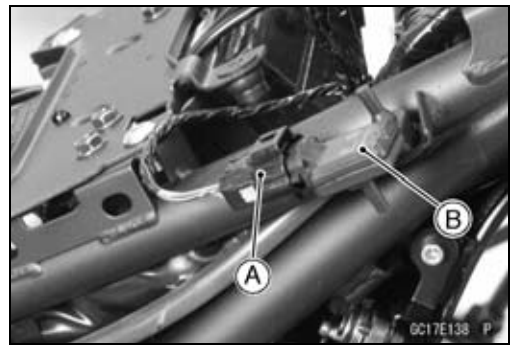

NOTICE

Never drop the atmospheric pressure sensor especially on a hard surface. Such a shock to the sensor can damage it.

- Remove:
  Left Seat Cover (see Seat Cover Removal in the Frame chapter)
  Sensor Connector [A] (Disconnect)
- Remove the atmospheric pressure sensor [B] from the rubber damper in the frame.

Atmospheric Pressure Sensor Installation

NOTE

○*The atmospheric pressure sensor is the same part as the intake air pressure sensor except that the intake air pressure sensor has the vacuum hose and different wiring.*

- Installation is the reverse of removal.

Atmospheric Pressure Sensor Input Voltage Inspection

NOTE

○*Be sure the battery is fully charged.*

- Turn the ignition switch OFF.
- Remove the left seat cover (see Seat Cover Removal in the Frame chapter).
- Disconnect the atmospheric pressure sensor connector and connect the harness adapter [A] between these connectors.

Special Tool - Sensor Harness Adapter: 57001-1561

- Connect a digital meter to the harness adapter leads.

Atmospheric Pressure Sensor Input Voltage
Connections to Adapter:
Digital Meter (+) → G (sensor BL) lead
Digital Meter (–) → BK (sensor BR/BK) lead

- Measure the input voltage with the engine stopped and with the connector joined.
- Turn the ignition switch ON.

Input Voltage
Standard: DC 4.75 ~ 5.25 V

- Turn the ignition switch OFF.

★If the reading is within the standard, check the output voltage (Atmospheric Pressure Sensor Output Voltage Inspection).

Atmospheric Pressure Sensor (Service Code 15)

★If the input voltage is out of the standard, remove the ECU and check the wiring for continuity between main harness connectors.
○Disconnect the ECU and sensor connectors.

Wiring Inspection
ECU Connector [A] ←→
Atmospheric Pressure Sensor Connector [B]
BL lead (ECU terminal 10) [C]
BR/BK lead (ECU terminal 28) [D]

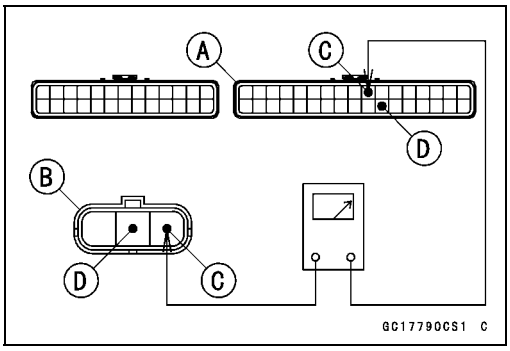

★If the wiring is good, check the ECU for its ground and power supply (see ECU Power Supply Inspection).
★If the ground and power supply are good, replace the ECU (see ECU Removal/Installation).

Atmospheric Pressure Sensor Output Voltage Inspection

● Measure the output voltage at the atmospheric pressure sensor in the same way as input voltage inspection, note the following.
○Disconnect the atmospheric pressure sensor connector and connect the harness adapter [A] between these connectors.

Special Tool - Sensor Harness Adapter: 57001-1561

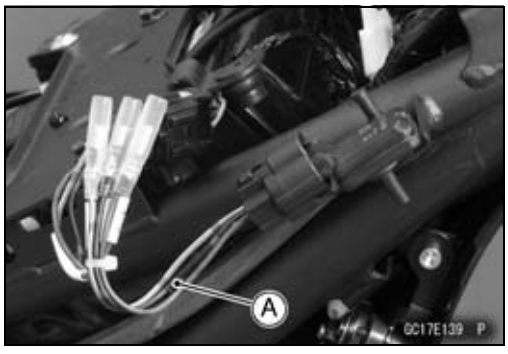

Atmospheric Pressure Sensor Output Voltage
Connections to Adapter:
Digital Meter (+) → G/W (sensor G/W) lead
Digital Meter (–) → BK (sensor BR/BK) lead

● Measure the output voltage with the engine stopped and with the connector joined.
● Turn the ignition switch ON.

Output Voltage
Usable Range: DC 3.80 ~ 4.20 V at the standard atmospheric pressure (101.32 kPa, 76 cmHg absolute)

NOTE

○*The output voltage changes according to the local atmospheric pressure.*

● Turn the ignition switch OFF.
★If the reading is out of the usable range, replace the sensor.

★If the reading is within the standard, remove the ECU and check the wiring for continuity between main harness connector.
○Disconnect the ECU and sensor connectors.

Wiring Inspection
ECU Connector [A] ←→
Atmospheric Pressure Sensor Connector [B]
G/W lead (ECU terminal 25) [C]
BR/BK lead (ECU terminal 28) [D]

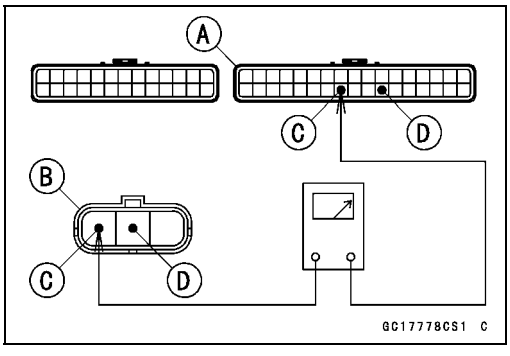

Atmospheric Pressure Sensor (Service Code 15)

★If the wiring is good, check the sensor for various vacuum.
○Determine the local altitude (elevation).
★If you know the local altitude, use the chart in this section.
★If you know the local atmospheric pressure using a barometer, substitute the atmospheric pressure for Pv (vacuum pressure) in the intake air pressure sensor chart (see Intake Air Pressure Sensor Output Voltage Inspection).
○Get the usable range of the atmospheric pressure sensor output voltage in the same way as Output Voltage Inspection of the intake air pressure sensor and check if Va (output voltage) is within the usable range or not.
★If the reading is out of the usable range, replace the sensor.
★If the reading is within the usable range, check the ECU for its ground, and power supply (see ECU Power Supply Inspection).
★If the ground and power supply are good, replace the ECU (see ECU Removal/Installation).

Atmospheric Pressure Sensor (Service Code 15)

Atmospheric Pressure/Altitude Relationship

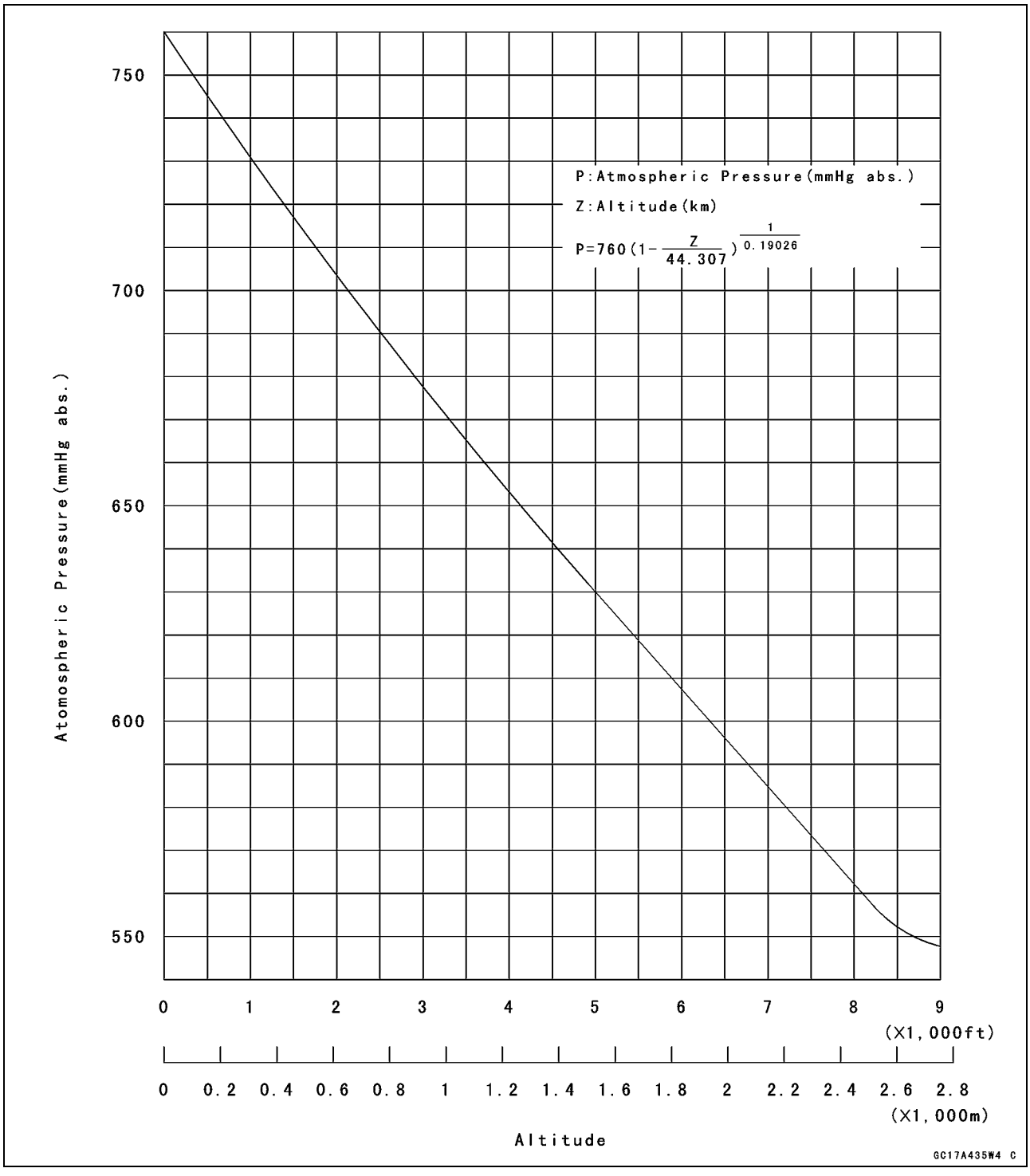

Atmospheric Pressure Sensor (Service Code 15)

Atmospheric Pressure Sensor Circuit

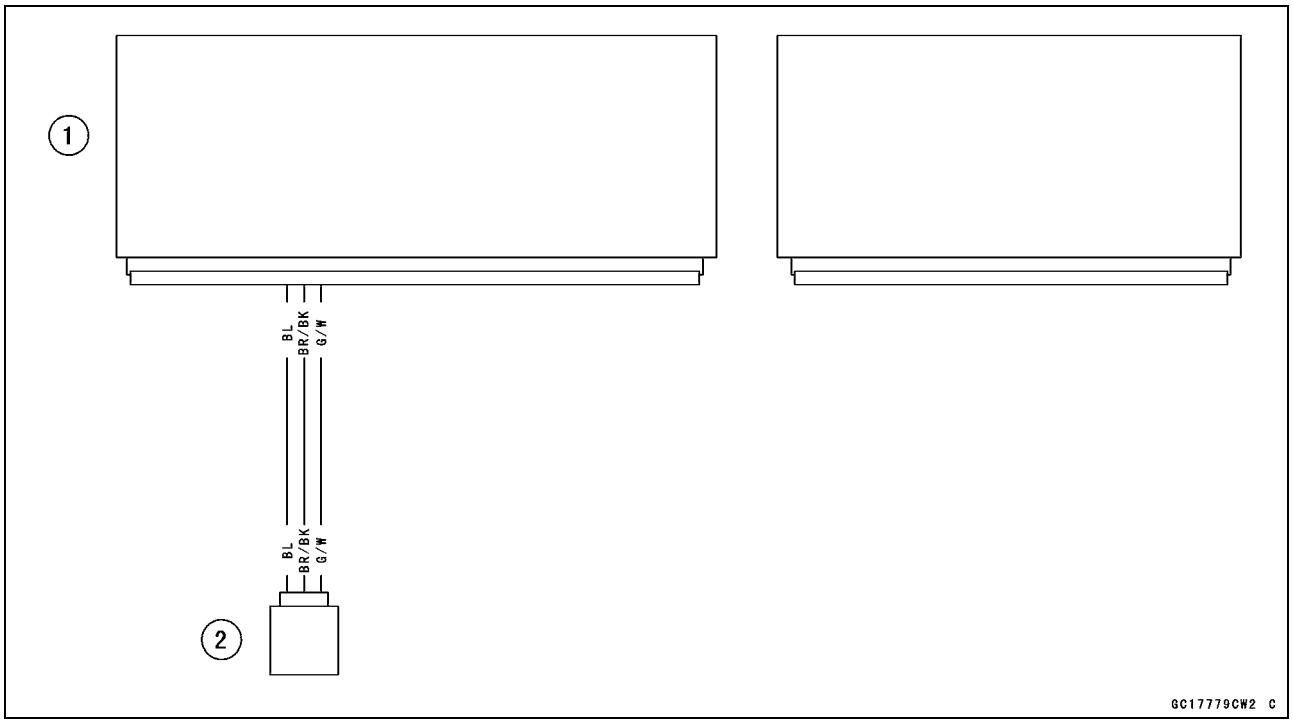

1. ECU
2. Atmospheric Pressure Sensor

Crankshaft Sensor (Service Code 21)

The crankshaft sensor has no power source, and when the engine stops, the crankshaft sensor generates no signals.

Crankshaft Sensor Removal/Installation

- Refer to the Crankshaft Sensor Removal/Installation in the Electrical System chapter.

Crankshaft Sensor Resistance Inspection

- Refer to the Crankshaft Sensor Inspection in the Electrical System chapter.

★If the reading is within the standard, check the peak voltage (see Crankshaft Sensor Peak Voltage Inspection).

Crankshaft Sensor Peak Voltage Inspection

- Refer to the Crankshaft Sensor Peak Voltage Inspection in the Electrical System chapter.

★If the reading is within the standard, remove the ECU and check the wiring for continuity between main harness connectors.

○Disconnect the ECU and sensor connectors.

Wiring Inspection

ECU Connector [A] ←→

Crankshaft Sensor Connector [B]

Y/BK lead (ECU terminal 13) [C]

BK lead (ECU terminal 30) [D]

★If the wiring is good, check the ECU for its ground and power supply (see ECU Power Supply Inspection).

★If the ground and power supply are good, replace the ECU (see ECU Removal/Installation).

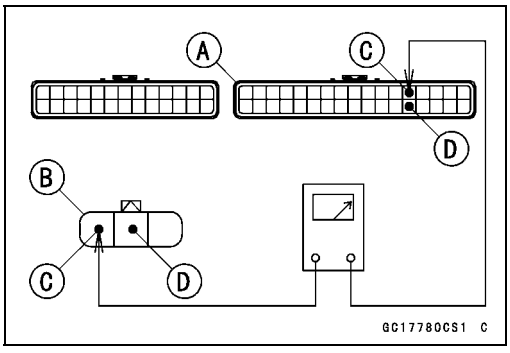

Crankshaft Sensor Circuit

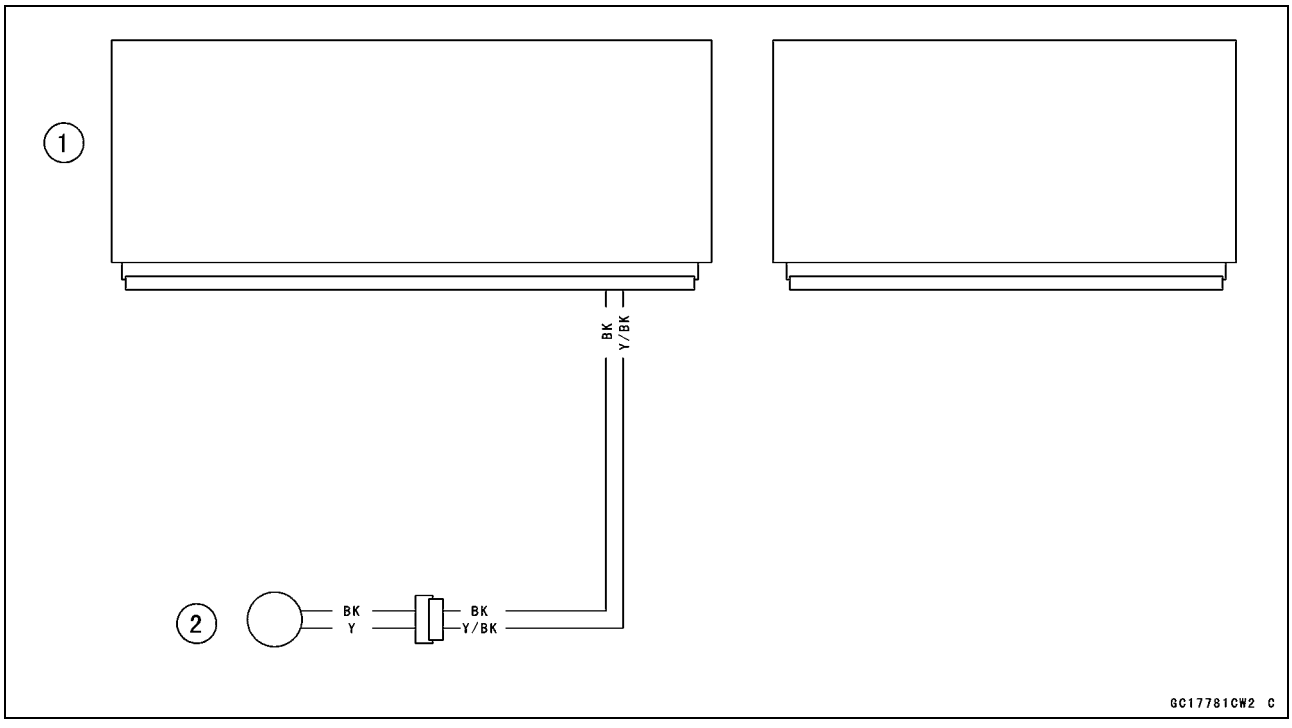

1. ECU
2. Crankshaft Sensor

Camshaft Position Sensor (Service Code 23)

The camshaft position sensor detects the position of the camshaft, and distinguishes the cylinder.

The camshaft position sensor has no power source, and when the engine stops, the camshaft position sensor generates no signals.

Camshaft Position Sensor Removal/Installation

- Refer to the Camshaft Position Sensor Removal/Installation in the Electrical System chapter.

Camshaft Position Sensor Resistance Inspection

- Refer to the Camshaft Position Sensor Inspection in the Electrical System chapter.

★If the reading is within the standard, check the peak voltage (see Camshaft Position Sensor Peak Voltage Inspection).

Camshaft Position Sensor Peak Voltage Inspection

- Refer to the Camshaft Position Sensor Peak Voltage Inspection in the Electrical System chapter.

★If the reading is within the standard, remove the ECU and check the wiring for continuity between main harness connectors.

○Disconnect the ECU and sensor connectors.

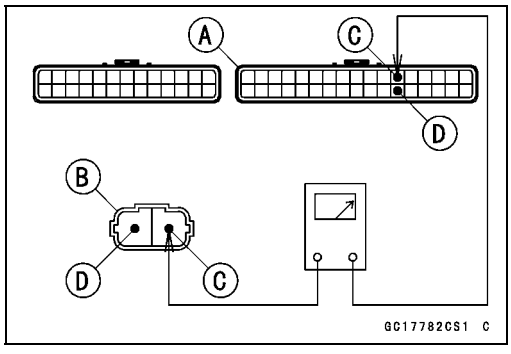

Wiring Inspection

ECU Connector [A] ←→

Camshaft Position Sensor Connector [B]

Y/R lead (ECU terminal 12) [C]

BR/W lead (ECU terminal 29) [D]

★If the wiring is good, check the ECU for its ground and power supply (see ECU Power Supply Inspection).

★If the ground and power supply are good, replace the ECU (see ECU Removal/Installation).

Camshaft Position Sensor (Service Code 23)

Camshaft Position Sensor Circuit

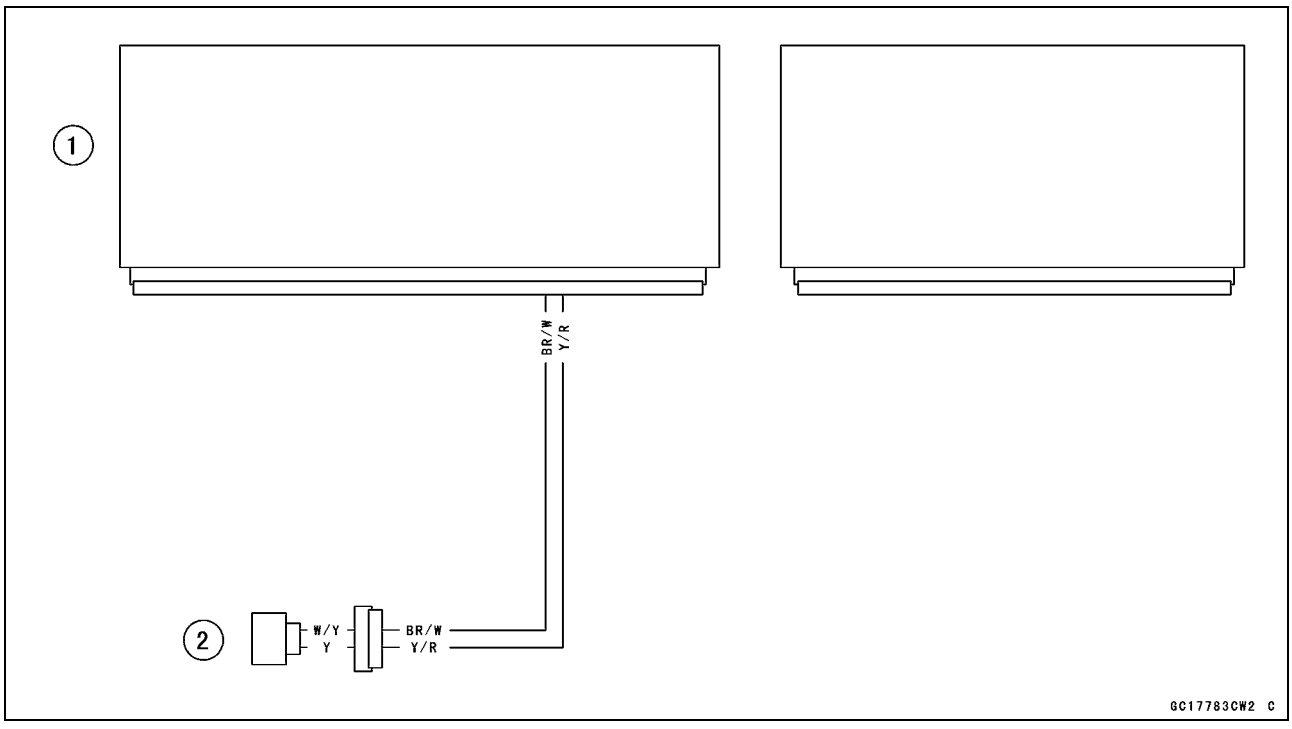

1. ECU
2. Camshaft Position Sensor

Speed Sensor (Service Code 24, 25)

Speed Sensor Removal/Installation

- Refer to the Speed Sensor Removal/Installation in the Electrical System chapter.

Speed Sensor Input Voltage Inspection

NOTE

○*Be sure the battery is fully charged.*

- Turn the ignition switch OFF.
- Disconnect the speed sensor connector and connect the harness adapter [A] between these connectors.

Special Tool - Speed Sensor Measuring Adapter: 57001 -1667

- Connect a digital meter to the harness adapter leads.

Speed Sensor Input Voltage
Connections to Adapter:
Digital Meter (+) → BL (sensor BL) lead
Digital Meter (–) → BK/Y (sensor BR/BK) lead

- Measure the input voltage with the engine stopped and with the connector joined.
- Turn the ignition switch ON.

Input Voltage
Standard: DC 4.75 ~ 5.25 V

- Turn the ignition switch OFF.

★If the reading is within the standard, check the output voltage (see Speed Sensor Output Voltage Inspection).

★If the reading is out of the standard, remove the ECU and check the wiring for continuity between main harness connectors.

○Disconnect the ECU and sensor connectors.

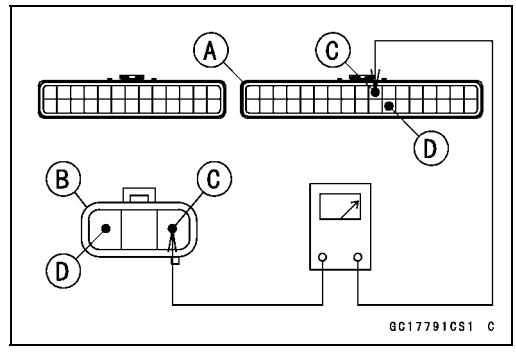

Wiring Inspection
ECU Connector [A] ←→
Speed Sensor Connector [B]
BL lead (ECU terminal 10) [C]
BR/BK lead (ECU terminal 28) [D]

★If the wiring is good, check the ECU for its ground and power supply (see ECU Power Supply Inspection).

★If the ground and power supply are good, replace the ECU (see ECU Removal/Installation).

Speed Sensor (Service Code 24, 25)

Speed Sensor Output Voltage Inspection

- Raise the rear wheel off the ground with the stand.
- Measure the output voltage at the speed sensor in the same way as input voltage inspection, note the following.

○Disconnect the speed sensor connector and connect the harness adapter [A] between these connectors.

Special Tool - Speed Sensor Measuring Adapter: 57001 -1667

Speed Sensor Output Voltage
Connections to Adapter:
Digital Meter (+) → BL/Y (sensor P) lead
Digital Meter (–) → BK/Y (sensor BR/BK) lead

- Measure the output voltage with the engine stopped and with the connector joined.
- Turn the ignition switch ON.

Output Voltage
Standard: About DC 0.05 ~ 0.09 V or DC 4.5 ~ 4.9 V at ignition switch ON and 0 km/h

NOTE

○*Rotate the rear wheel by hand, confirm the output voltage will be raise or lower.*

- Turn the ignition switch OFF.

★If the reading is out of the standard, replace the sensor.

★If the reading is within the standard, remove the ECU and check the wiring for continuity between main harness connectors.

○Disconnect the ECU and sensor connectors.

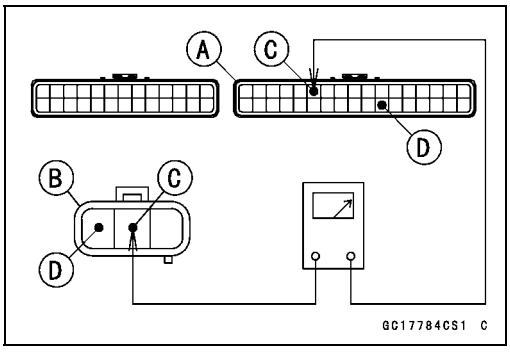

Wiring Inspection
ECU Connector [A] ←→
Speed Sensor Connector [B]
P lead (ECU terminal 6) [C]
BR/BK lead (ECU terminal 28) [D]

★If the wiring is good, check the ECU for its ground and power supply (see ECU Power Supply Inspection).

★If the ground and power supply are good, replace the ECU (see ECU Removal/Installation).

Speed Sensor (Service Code 24, 25)

Speed Sensor Circuit

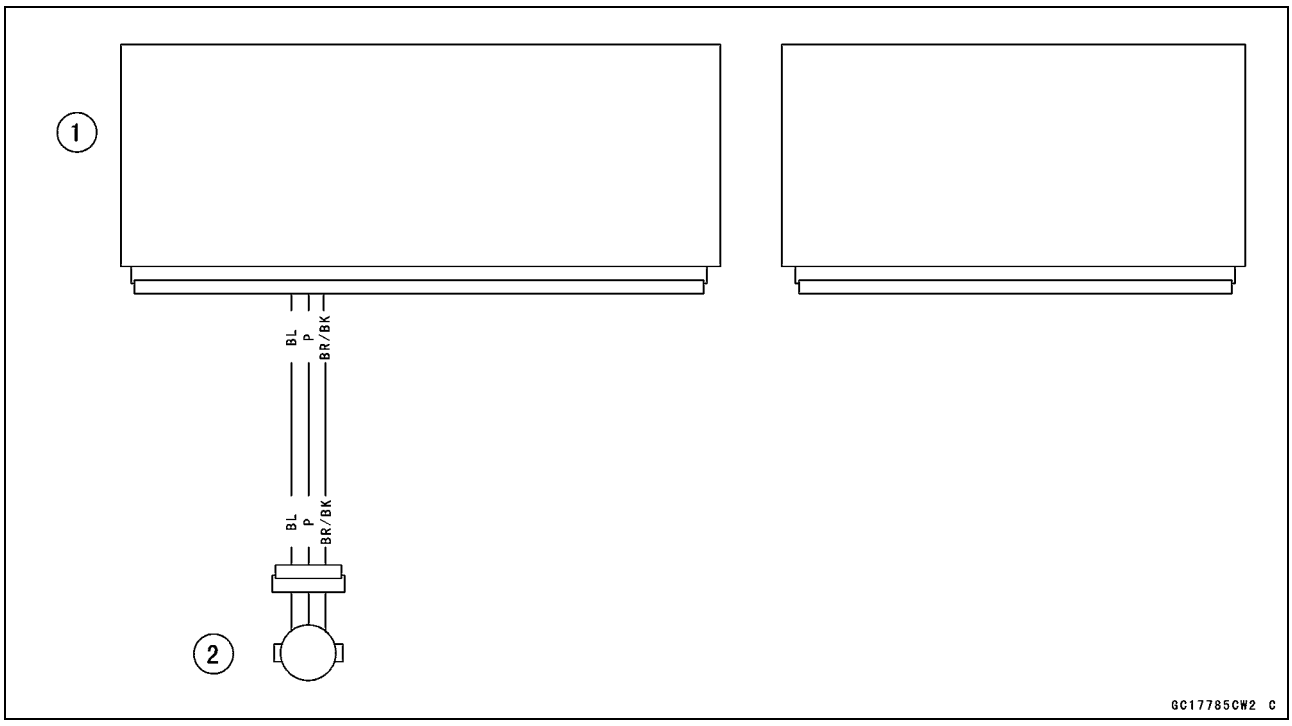

1. ECU
2. Speed Sensor

Vehicle-down Sensor (Service Code 31)

This sensor has a weight [A] with two magnets inside, and sends a signal to the ECU. But when the motorcycle banks 60 ~ 70° or more to either side (in fact falls down), the weight turns and the signal changes. The ECU senses this change, and stops the fuel pump relay, the fuel injectors and the ignition system.

Hall IC [B]

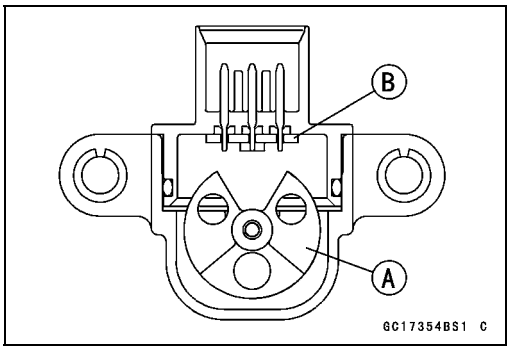

When the motorcycle is down, the ignition switch is left ON. If the starter button is pushed, the electric starter turns but the engine does not start. To start the engine again, raise the motorcycle, turn the ignition switch OFF, and then ON.

Vehicle-down Sensor [A]
Ground Terminal BR/BK [B]
Output Terminal Y/G [C]
Power Source Terminal BL [D]

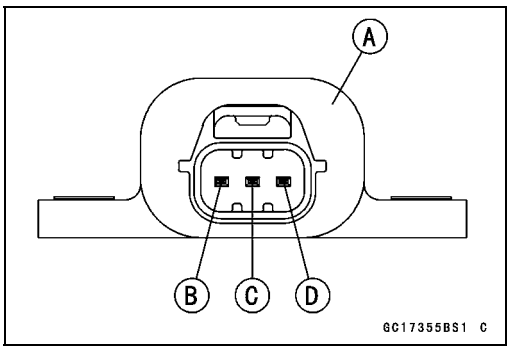

Vehicle-down Sensor Removal

NOTICE

Never drop the vehicle-down sensor especially on a hard surface. Such a shock to the sensor can damage it.

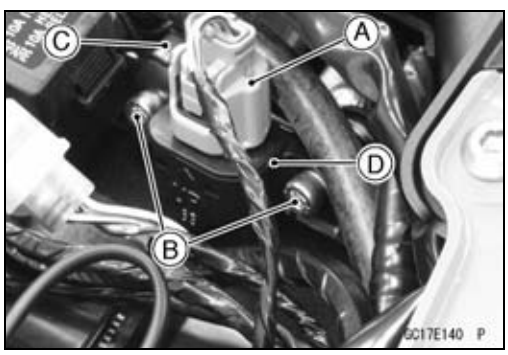

- Remove:
  Rear Seat (see Rear Seat Removal in the Frame chapter)
  Connector [A] (Disconnect)
  Bolts [B] and Clamp [C]
  Vehicle-down Sensor [D]

Vehicle-down Sensor Installation

- The UP mark [A] of the sensor should face upward.
- Tighten:

Torque - Vehicle-down Sensor Bolts: 6.0 N·m (0.61 kgf·m, 53 in·lb)

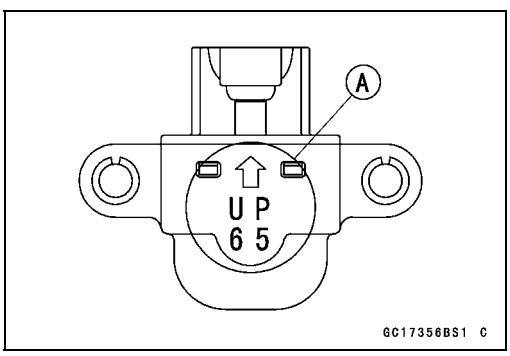

⚠ WARNING

Incorrect installation of the vehicle-down sensor could cause sudden loss of engine power. The rider could lose balance during certain riding situations for an accident resulting in injury or death. Ensure that the vehicle-down sensor is held in place by the sensor brackets.

Vehicle-down Sensor (Service Code 31)

Vehicle-down Sensor Input Voltage Inspection

NOTE

○*Be sure the battery is fully charged.*

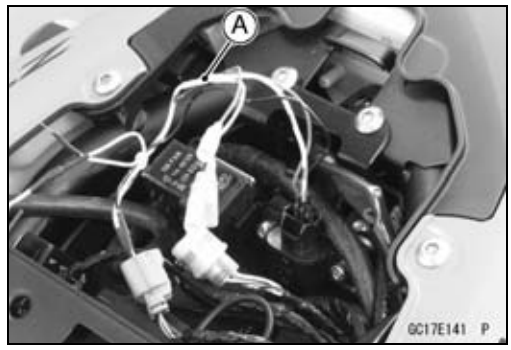

- Turn the ignition switch OFF.
- Disconnect the vehicle-down sensor connector and connect the harness adapter [A] between these connectors as shown in the figure.
  Main Harness [B]
  Vehicle-down Sensor [C]

Special Tool - Measuring Adapter: 57001-1700

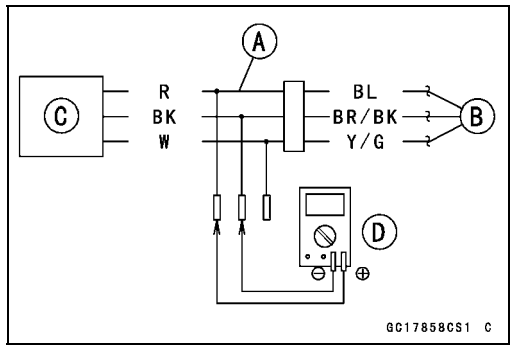

- Connect a digital meter [D] to the harness adapter leads.

Vehicle-down Sensor Input Voltage
Connections to Adapter:
Digital Meter (+) → R (sensor BL) lead
Digital Meter (–) → BK (sensor BR/BK) lead

- Measure the input voltage with the engine stopped and with the connector joined.
- Turn the ignition switch ON.

Input Voltage
Standard: DC 4.75 ~ 5.25 V

- Turn the ignition switch OFF.

★If the reading is within the standard, check the output voltage (see Vehicle-down Sensor Output Voltage Inspection).

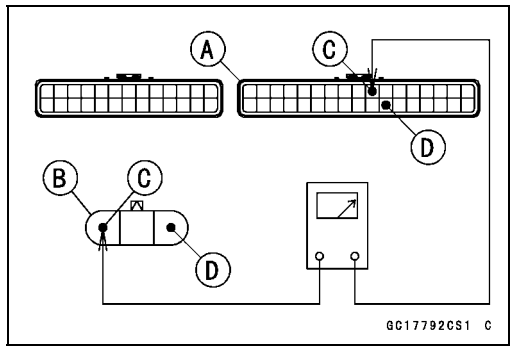

★If the reading is out of the standard, remove the ECU and check the wiring for continuity between main harness connectors.

○Disconnect the ECU and sensor connectors.

Wiring Inspection
ECU Connector [A] ←→
Vehicle-down Sensor Connector [B]
BL lead (ECU terminal 10) [C]
BR/BK lead (ECU terminal 28) [D]

★If the wiring is good, check the ECU for its ground and power supply (see ECU Power Supply Inspection).

★If the ground and power supply are good, replace the ECU (see ECU Removal/Installation).

Vehicle-down Sensor (Service Code 31)

Vehicle-down Sensor Output Voltage Inspection

- Remove the vehicle-down sensor (see Vehicle-down Sensor Removal).
- Connect the harness adapter [A] to the vehicle-down sensor connectors as shown in the figure.

Special Tool - Measuring Adapter: 57001-1700

Main Harness [B]
Vehicle-down Sensor [C]

- Connect a digital meter [D] to the harness adapter leads.

Vehicle-down Sensor Output Voltage
Connections to Adapter:
Digital Meter (+) → W (sensor Y/G) lead
Digital Meter (–) → BK (sensor BR/BK) lead

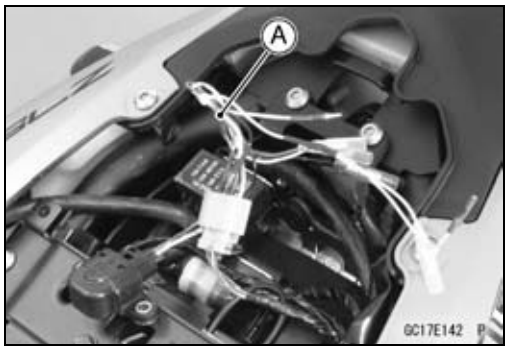

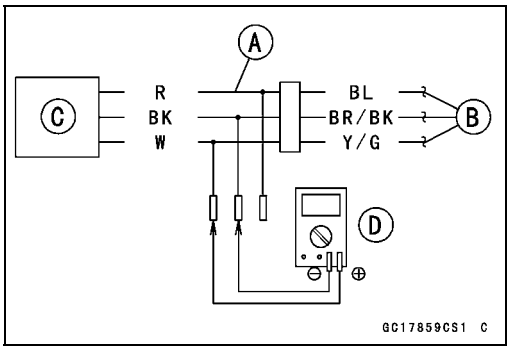

- Hold the sensor vertically.
- Measure the output voltage with the engine stopped and with the connector joined.
- Turn the ignition switch ON.
- Tilt the sensor 60 ~ 70° or more [A] right or left, then hold the sensor almost vertical with the arrow mark pointed up [B], and measure the output voltage.

Output Voltage
Standard: With sensor tilted 60 ~ 70° or more right or left: DC 0.65 ~ 1.35 V
With sensor arrow mark pointed up: DC 3.55 ~ 4.45 V

NOTE

○*If you need to test again, turn the ignition switch OFF, and then ON.*

- Turn the ignition switch OFF.

★If the reading is out of the standard, replace the sensor.

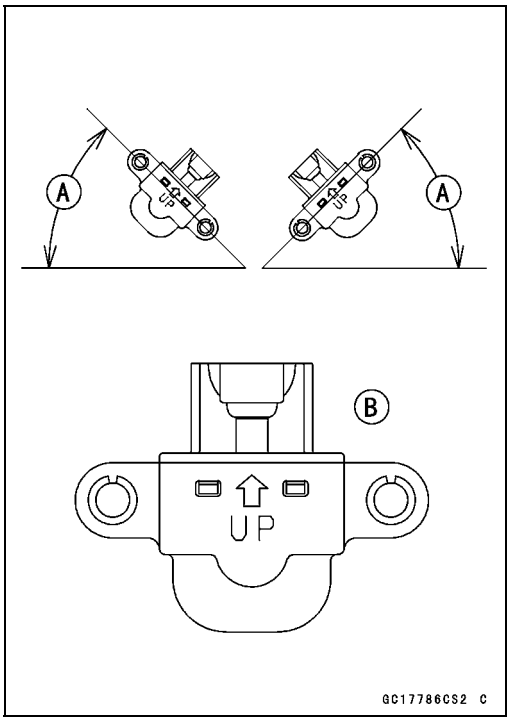

Vehicle-down Sensor (Service Code 31)

★If the reading is within the standard, remove the ECU and check the wiring for continuity between main harness connectors.

○Disconnect the ECU and sensor connectors.

Wiring Inspection

ECU Connector [A] ←→

Vehicle-down Sensor Connector [B]

Y/G lead (ECU terminal 11) [C]

BR/BK lead (ECU terminal 28) [D]

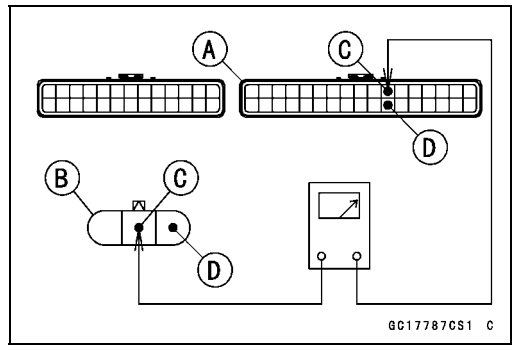

★If the wiring is good, check the ECU for its ground and power supply (see ECU Power Supply Inspection).

★If the ground and power supply are good, replace the ECU (see ECU Removal/Installation).

Vehicle-down Sensor Circuit

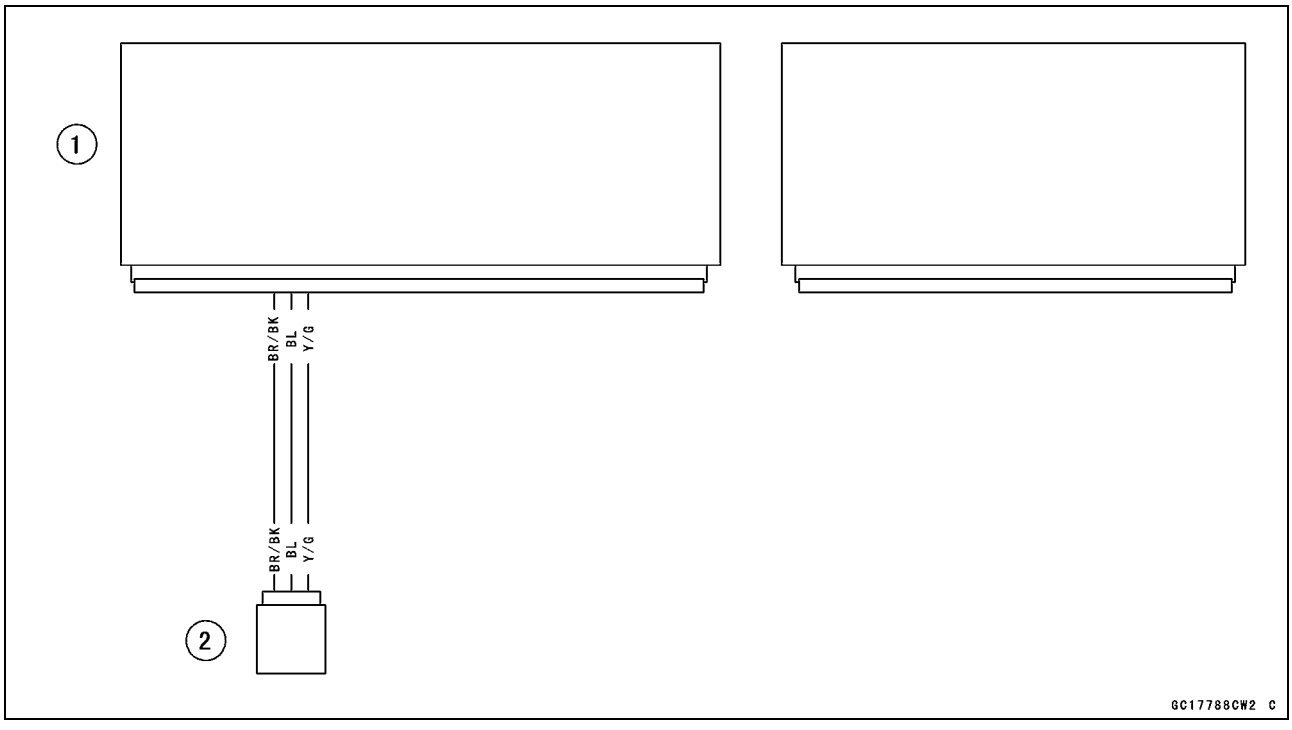

1. ECU
2. Vehicle-down Sensor

Subthrottle Sensor (Service Code 32)

The subthrottle sensor is a rotating variable resistor that change output voltage according to throttle operating. The ECU senses this voltage change and determines fuel injection quantity, and ignition timing according to engine rpm, and throttle opening.

Input Terminal [A]
Output Terminal [B]
Ground Terminal [C]

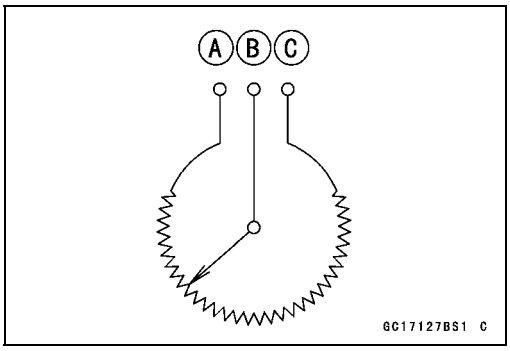

Subthrottle Sensor Removal/Adjustment

NOTICE

Do not remove or adjust the subthrottle sensor [A] since it has been adjusted and set with precision at the factory.
Never drop the throttle body assy especially on a hard surface. Such a shock to the subthrottle sensor can damage it.

Subthrottle Sensor Input Voltage Inspection

NOTE

○*Be sure the battery is fully charged.*

- Turn the ignition switch OFF.
- Disconnect the subthrottle sensor and connect the harness adapter [A] between these connectors.

Special Tool - Throttle Sensor Setting Adapter: 57001-1538

- Connect a digital meter to the harness adapter leads.

Subthrottle Sensor Input Voltage
Connections to Adapter:
Digital Meter (+) → BK (sensor BL) lead
Digital Meter (–) → W (sensor BR/BK) lead

- Measure the input voltage with the engine stopped and with the connector joined.
- Turn the ignition switch ON.

Input Voltage
Standard: DC 4.75 ~ 5.25 V

- Turn the ignition switch OFF.

★If the reading is within the standard, check the output voltage (see Subthrottle Sensor Output Voltage Inspection).

Subthrottle Sensor (Service Code 32)

★If the reading is out of the standard, remove the ECU and check the wiring for continuity between main harness connectors.

○Disconnect the ECU and sensor connectors.

Wiring Inspection
ECU Connector [A] ←→
Subthrottle Sensor Connector [B]
BL lead (ECU terminal 10) [C]
BR/BK lead (ECU terminal 28) [D]

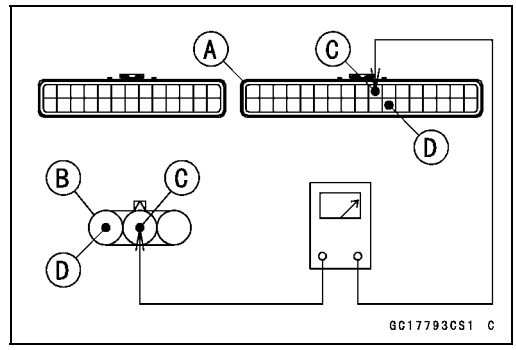

★If the wiring is good, check the ECU for its ground and power supply (see ECU Power Supply Inspection).

★If the ground and power supply are good, replace the ECU (see ECU Removal/Installation).

Subthrottle Sensor Output Voltage Inspection

- Measure the output voltage at the subthrottle sensor in the same way as input voltage inspection, note the following.

○Disconnect the subthrottle sensor connector and connect the harness adapter [A] between these connectors.

Special Tool - Throttle Sensor Setting Adapter: 57001 -1538

Subthrottle Sensor Output Voltage
Connections to Adapter:
Digital Meter (+) → R (sensor BR) lead
Digital Meter (–) → W (sensor BR/BK) lead

- Remove the fuel tank (see Fuel Tank Removal).
- Disconnect the subthrottle valve actuator harness connector [A].

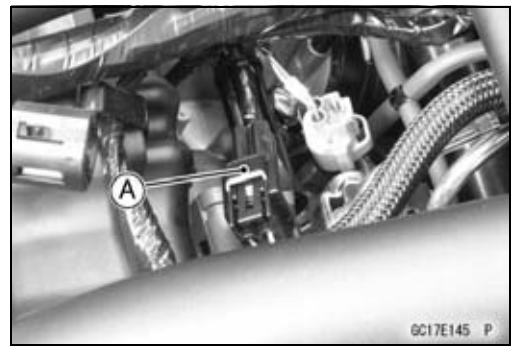

Subthrottle Sensor (Service Code 32)

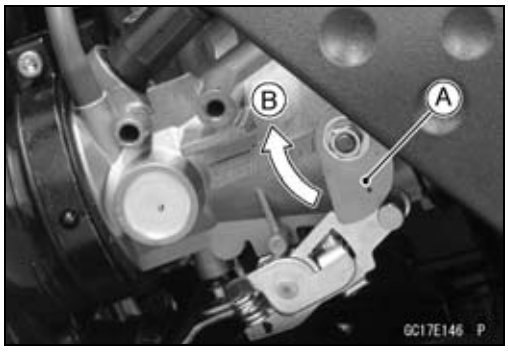

- Measure the output voltage with the engine stopped with the connector joined.
- Turn the ignition switch ON.
- Measure the output voltage when the subthrottle valve is completely closed by turning the lever [A] fully clockwise [B].

Output Voltage

Standard: DC 0.48 ~ 0.52 V at subthrottle valve full close position

DC 3.8 ~ 4.0 V at subthrottle valve full open position

NOTE

○*Turn the lever counterclockwise, confirm the output voltage will be raise.*

○*The standard voltage refers to the value when the voltage reading at the Input Voltage Inspection shows 5 V exactly.*

○*When the input voltage reading shows other than 5 V, derive a voltage range as follows.*
Example:
In the case of a input voltage of 4.75 V.
0.48 × 4.75 ÷ 5.00 = 0.46 V
0.52 × 4.75 ÷ 5.00 = 0.49 V
Thus, the valid range is 0.46 ~ 0.49 V

- Turn the ignition switch OFF.

★If the reading is out of the standard, check the subthrottle sensor resistance (see Subthrottle Sensor Resistance Inspection).

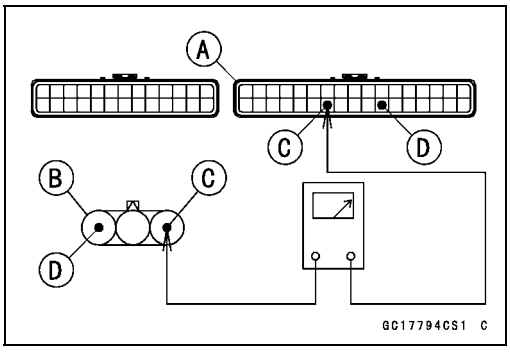

★If the reading is within the standard, remove the ECU and check the wiring for continuity between main harness connectors.

○Disconnect the ECU and sensor connectors.

Wiring Inspection

ECU Connector [A] ←→

Subthrottle Sensor Connector [B]

BR lead (ECU terminal 24) [C]

BR/BK lead (ECU terminal 28) [D]

★If the wiring is good, check the ECU for its ground and power supply (see ECU Power Supply Inspection).

★If the ground and power supply are good, replace the ECU (see ECU Removal/Installation).

Subthrottle Sensor (Service Code 32)

Subthrottle Sensor Resistance Inspection

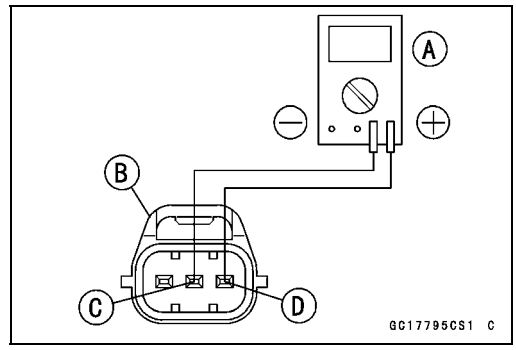

- Turn the ignition switch OFF.
- Disconnect the subthrottle sensor connector.
- Connect a digital meter [A] to the subthrottle sensor connector [B].
- Measure the subthrottle sensor resistance.

Subthrottle Sensor Resistance
Connections: BL lead [C] ←→ BR/BK lead [D]
Standard: 4 ~ 6 kΩ

★If the reading is out of the standard, replace the throttle body assy.
★If the reading is within the standard, but the problem still exists, replace the ECU (see ECU Removal/Installation).

Subthrottle Sensor Circuit

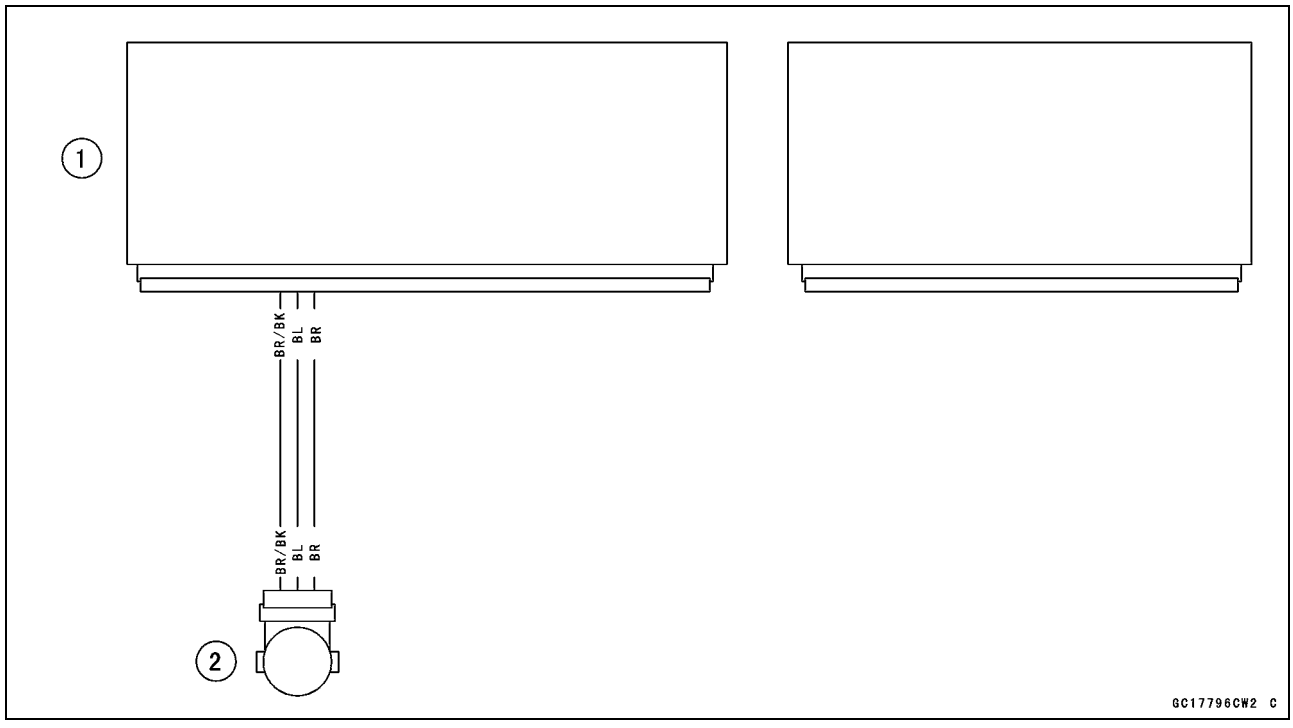

1. ECU
2. Subthrottle Sensor

Oxygen Sensor - not activated (Service Code 33)

Oxygen Sensor Removal/Installation

- Refer to the Oxygen Sensor Removal/Installation in the Electrical System chapter.

Oxygen Sensor Inspection

- Turn the ignition switch OFF.
- Remove:
  Right Frame Cover (see Frame Cover Removal in the Frame chapter)
  Bolt [A]

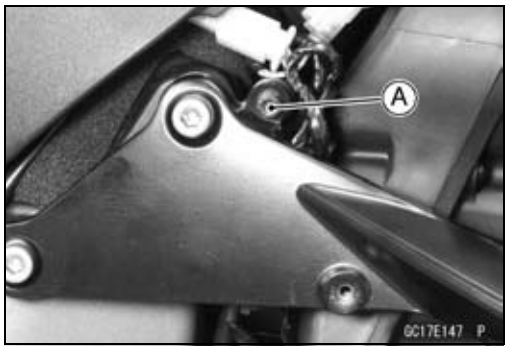

- Pull the oxygen sensor lead connector [A], crankshaft sensor lead connector and bracket downward.

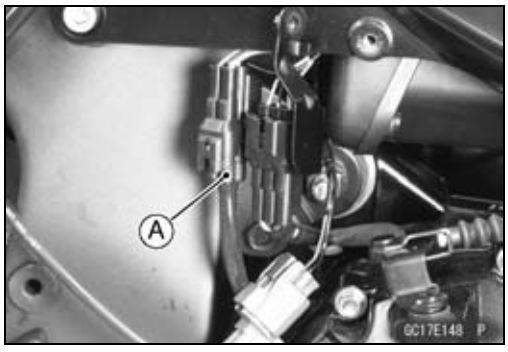

- Disconnect the oxygen sensor lead connector (4 pins connector) and connect the harness adapter [A] between these connectors.

  Special Tool - Oxygen Sensor Measuring Adapter: 57001 -1682

- Connect a digital meter to the harness adapter leads.

  Oxygen Sensor Output Voltage
  Connections to Adapter:
  Digital Meter (+) → BL/Y (sensor BL) lead
  Digital Meter (−) → BR/BK (sensor W) lead

- Remove the fuel tank (see Fuel Tank Removal).
- Separate the hose [A] from the air cleaner housing.

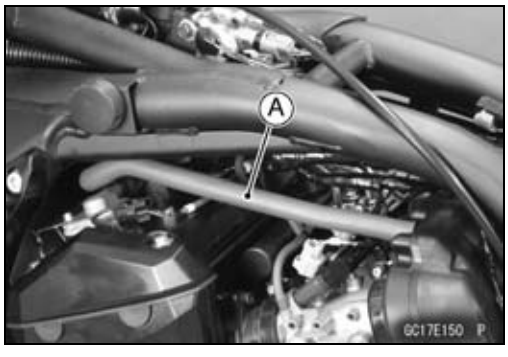

Oxygen Sensor - not activated (Service Code 33)

- Remove the connector [A] from the bracket [B].

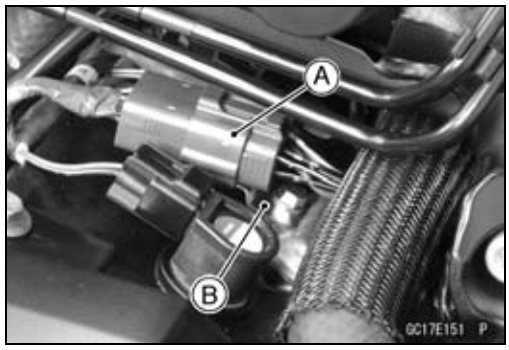

- Separate the hoses [A] from the air suction valve covers.

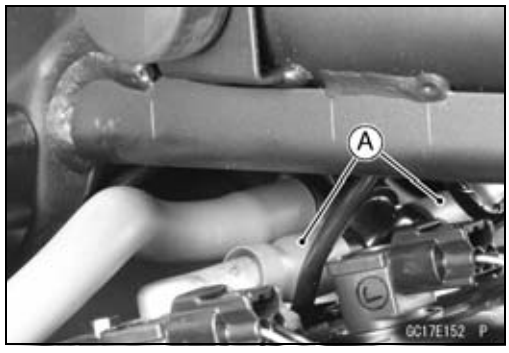

- Pull the air switching valve [A] and hoses out to the left side of the motorcycle.

○Do not disconnect the air switching valve connector [B].

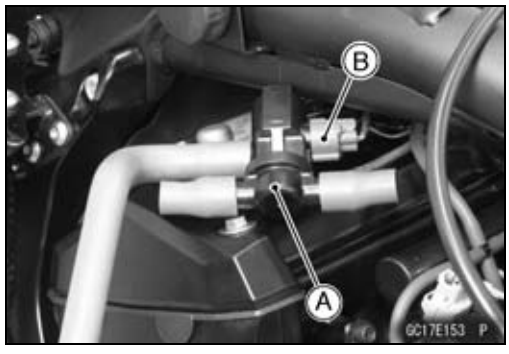

- Install the suitable plugs [A] on the fitting of the air suction valve covers, and shut off the secondary air.

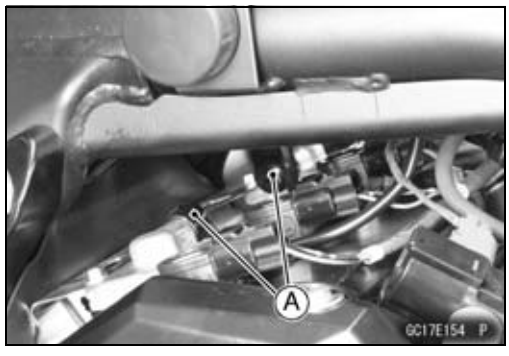

- Remove the fuel outlet hose (see Fuel Hose Replacement in the Periodic Maintenance chapter).
- Connect the following parts temporary.
  Fuel Pump Lead Connector [A]
  Fuel Level Sensor Lead Connector [B]
  Extension Tube [C]

Special Tool - Extension Tube: 57001-1578

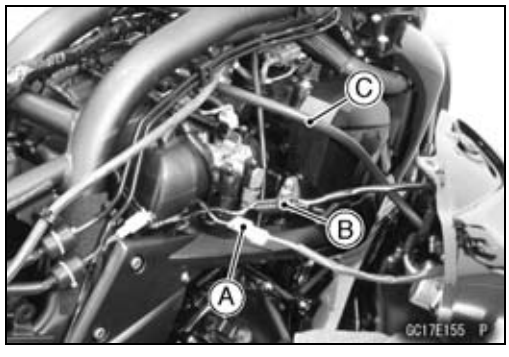

Oxygen Sensor - not activated (Service Code 33)

- Start the engine, and let it idle.
- Warm up the engine thoroughly until the radiator fan starts.
- Measure the output voltage with the connector joined.

Output Voltage (with Plugs)
Standard: DC 0.7 V or more

- Next, remove the plugs from the fittings [A] with idling.

⚠ WARNING

The engine gets extremely hot during normal operation and can cause serious burns. Never touch a hot engine.

- Measure the output voltage with the connector joined.

Output Voltage (without Plugs)
Standard: DC 0.2 V or less

- Turn the ignition switch OFF.

★If the reading is out of the standard (with plugs: DC 0.7 V or more, without plugs: DC 0.2 V or less), remove the ECU and check the wiring for continuity between main harness connectors.

○Disconnect the ECU and sensor connectors.

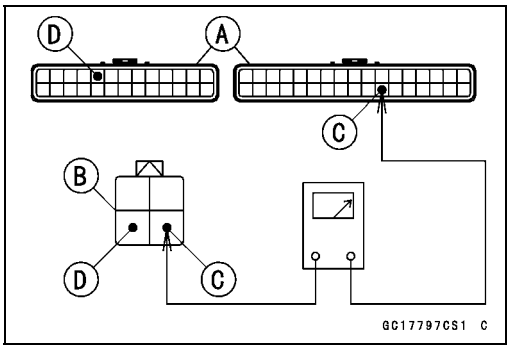

Wiring Inspection
ECU Connectors [A] ←→
Oxygen Sensor Connector [B]
BR/BK lead (ECU terminal 28) [C]
W/BL lead (ECU terminal 39) [D]

★If the wiring is good, replace the sensor.

★If the reading is within the standard (with plugs: DC 0.7 V or more, without plugs: DC 0.2 V or less), check the ECU for its ground and power supply (see ECU Power Supply Inspection).

★If the ground and power supply are good, replace the ECU (see ECU Removal/Installation).

Oxygen Sensor - not activated (Service Code 33)

Oxygen Sensor Circuit

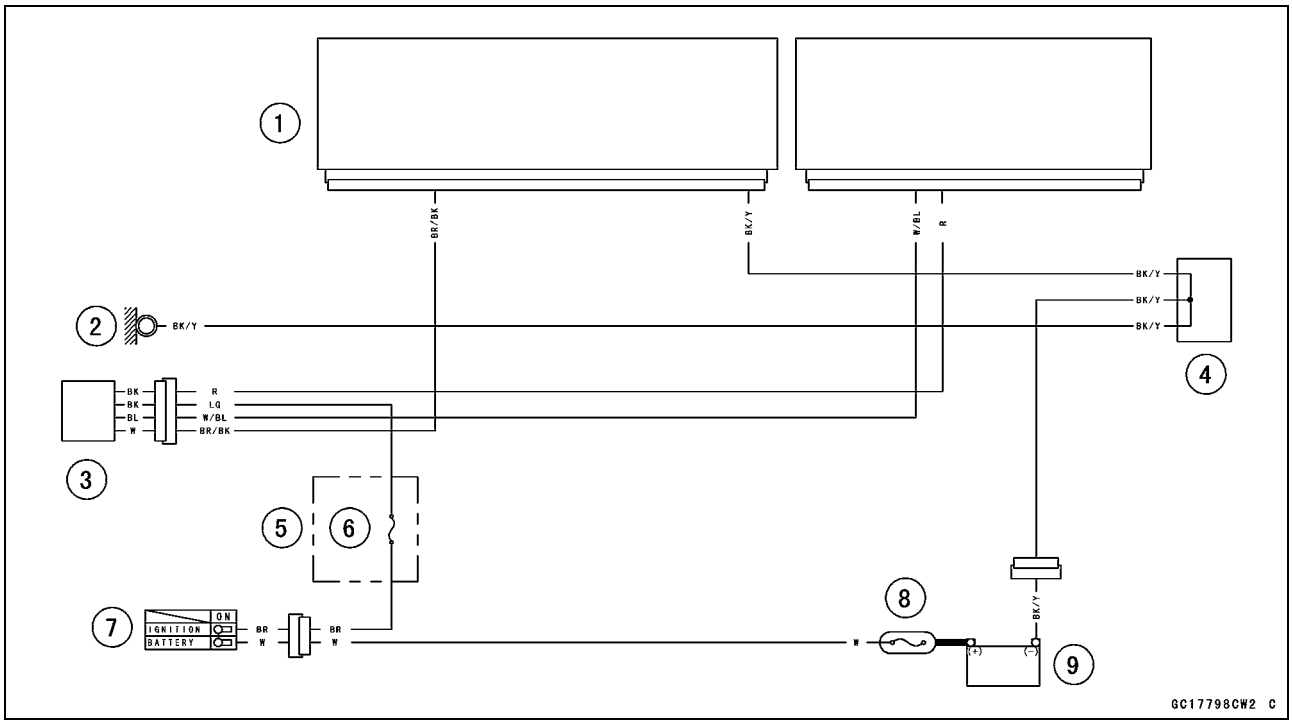

1. ECU
2. Meter Ground
3. Oxygen Sensor
4. Water-proof Joint C
5. Fuse Box 1
6. Oxygen Sensor Heater Fuse 10 A
7. Ignition Switch
8. Main Fuse 30 A
9. Battery 12 V 8 Ah

Exhaust Butterfly Valve Actuator Sensor (Service Code 34)

Exhaust Butterfly Valve Actuator Sensor Removal/Installation

The exhaust butterfly valve actuator sensor is built in the exhaust butterfly valve actuator. So, the sensor itself can not be removed. Remove the exhaust butterfly valve actuator (see Exhaust Butterfly Valve Actuator Removal).

Exhaust Butterfly Valve Actuator Sensor Input Voltage Inspection

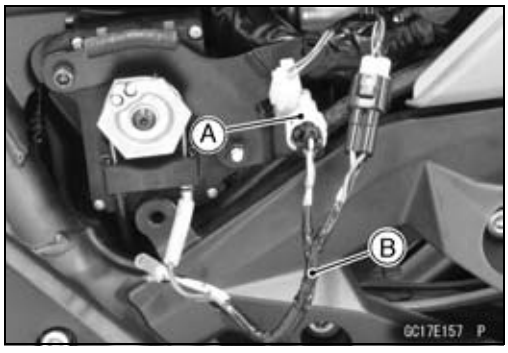

NOTE

○*Be sure the battery is fully charged.*

- Turn the ignition switch OFF.
- Remove the left side cover (see Side Cover Removal in the Frame chapter).
- Disconnect the exhaust butterfly valve actuator sensor lead connector (3 pins connector) [A] and connect the harness adapter [B] between these connector.

Special Tool - Throttle Sensor Setting Adapter #1: 57001 -1400

- Connect a digital meter to the harness adapter leads.

Exhaust Butterfly Valve Actuator Sensor Input Voltage Connections to Adapter:

Digital Meter (+) → Y/W (actuator W) lead

Digital Meter (−) → BK/BL (actuator BK) lead

- Measure the input voltage with the engine stopped and with the connector joined.
- Turn the ignition switch ON.

Input Voltage
Standard: DC 4.75 ~ 5.25 V

- Turn the ignition switch OFF.

★If the reading is within the standard, check the output voltage (see Exhaust Butterfly Valve Actuator Sensor Output Voltage Inspection).

★If the reading is out of the standard, remove the ECU and check the wiring for continuity between main harness connectors.

○Disconnect the ECU and sensor connectors.

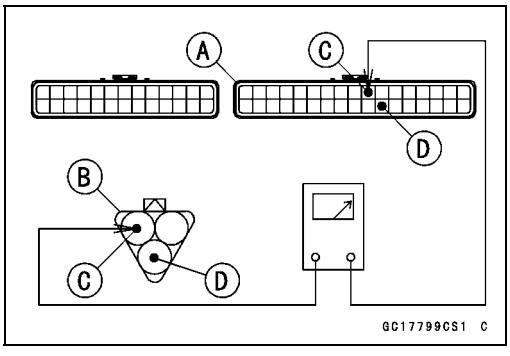

Wiring Inspection
ECU Connector [A] ←→
Exhaust Butterfly Valve Actuator Sensor Connector [B]
BL lead (ECU terminal 10) [C]
BR/BK lead (ECU terminal 28) [D]

★If the wiring is good, check the ECU for its ground and power supply (see ECU Power Supply Inspection).

★If the ground and power supply are good, replace the ECU (see ECU Removal/Installation).

Exhaust Butterfly Valve Actuator Sensor (Service Code 34)

Exhaust Butterfly Valve Actuator Sensor Output Voltage Inspection

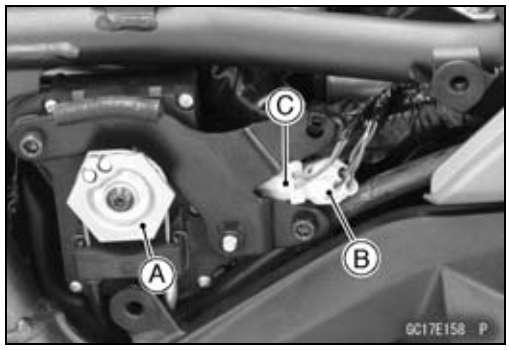

NOTE

○*Before this inspection, confirm the pulley [A] is original position (see Exhaust Butterfly Valve Actuator Installation).*

- Disconnect:
  2 pins Connector [B]
  3 pins Connector [C]

- Connect the harness adapter [A] between the 3 pins connectors.

  Special Tool - Throttle Sensor Setting Adapter #1: 57001 -1400

- Connect a digital meter to the harness adapter leads.

  Exhaust Butterfly Valve Actuator Sensor Output Voltage Connections to Adapter:

  Digital Meter (+) → BL (actuator Y) lead

  Digital Meter (−) → BK/BL (actuator BK) lead

- Measure the output voltage at the 3 pins connector of the exhaust butterfly valve actuator when the pulley is original position.
- Turn the ignition switch ON.

  Output Voltage
  Standard: DC 3.46 ~ 3.76 V at pulley original position

- Turn the ignition switch OFF.

★If the reading is out of the standard, check the exhaust butterfly valve actuator sensor resistance (see Exhaust Butterfly Valve Actuator Sensor Resistance Inspection).

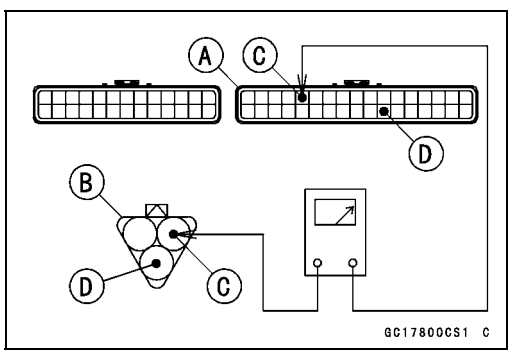

★If the reading is within the standard, remove the ECU and check the wiring for continuity between main harness connectors.

○Disconnect the ECU and sensor connectors.

Wiring Inspection
ECU Connector [A] ←→
Exhaust Butterfly Valve Actuator Sensor Connector [B]
R/BK lead (ECU terminal 5) [C]
BR/BK lead (ECU terminal 28) [D]

★If the wiring is good, check the ECU for its ground and power supply (see ECU Power Supply Inspection).

★If the ground and power supply are good, replace the ECU (see ECU Removal/Installation).

Exhaust Butterfly Valve Actuator Sensor (Service Code 34)

Exhaust Butterfly Valve Actuator Sensor Resistance Inspection

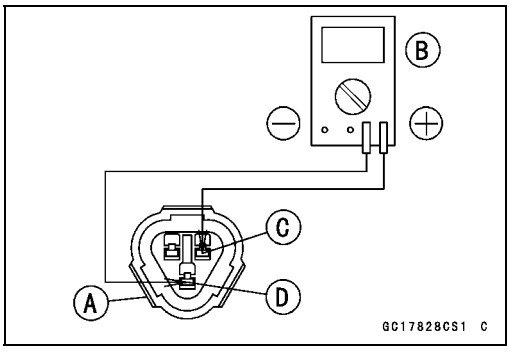

- Turn the ignition switch OFF.
- Disconnect the exhaust butterfly valve actuator sensor connector (3 pins connector) [A].
- Connect a digital meter [B] to the exhaust butterfly valve actuator sensor connector.
- Measure the exhaust butterfly valve actuator sensor resistance.

Exhaust Butterfly Valve Actuator Sensor Resistance
Connections: W lead [C] ←→ BK lead [D]
Standard: 4 ~ 6 kΩ

★If the reading is out of the standard, replace the exhaust butterfly valve actuator.
★If the reading within the standard, but the problem still exists, replace the ECU (see ECU Removal/Installation).

Exhaust Butterfly Valve Actuator Sensor Circuit

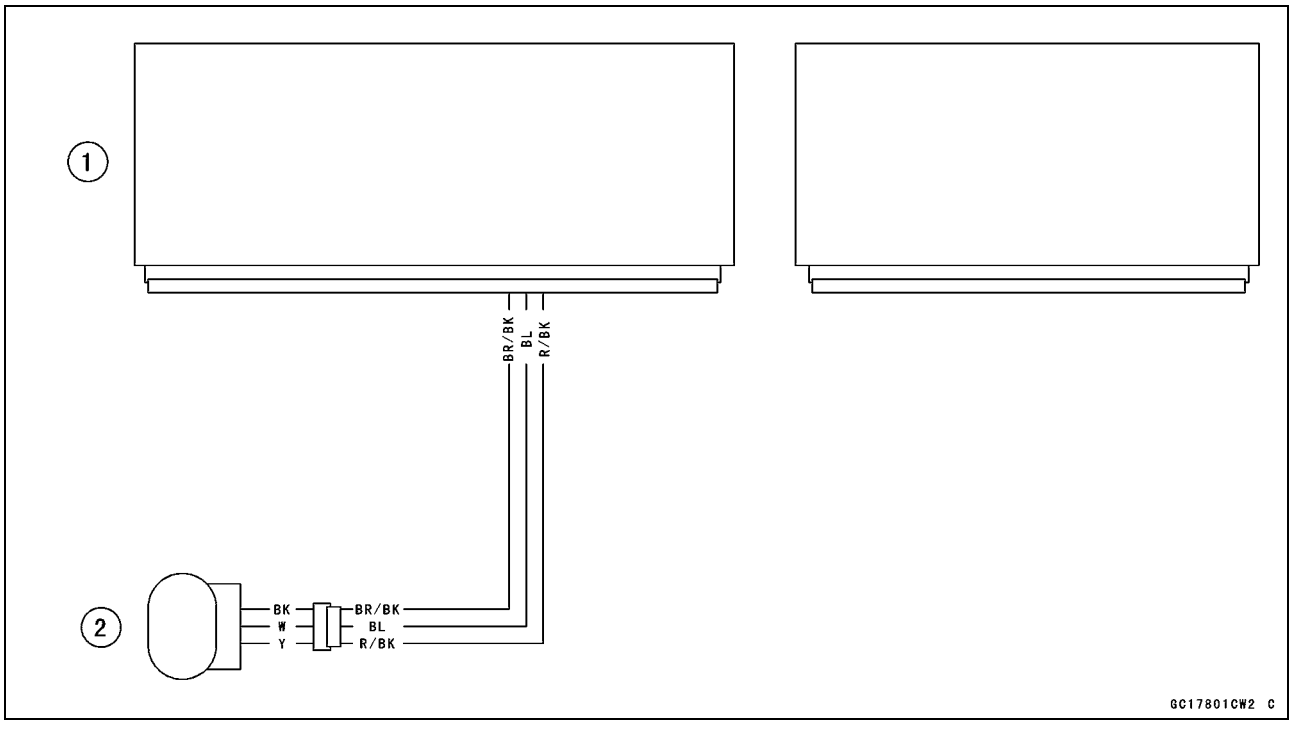

1. ECU
2. Exhaust Butterfly Valve Actuator

Immobilizer Amplifier (Service Code 35)

Antenna Resistance Inspection

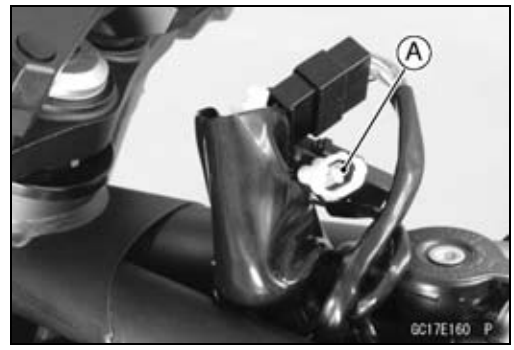

- Turn the ignition switch OFF.
- Remove the fuel tank (see Fuel Tank Removal).
- Disconnect the antenna lead connector [A].
- Measure the antenna resistance.

Antenna Resistance
Connections: BK lead ←→ BK lead
Standard: About 0.6 ~ 0.9 Ω

★If the reading is out of the standard, replace the antenna (see Immobilizer System Parts Replacement in the Electrical System chapter).
★If the reading is within the standard, check the wiring to the amplifier (see wiring diagram in next section).
★If the wiring is good, check the input voltage of the amplifier (see Amplifier Input Voltage Inspection).

Amplifier Input Voltage Inspection

NOTE

○*Be sure the battery is fully charged.*

- Turn the ignition switch OFF.
- Pull out the upper fairing forward (see Upper Fairing Removal in the Frame chapter).

○Do not disconnect the connectors.

- Connect a digital meter to the amplifier connector [A] with needle adapter set.

Special Tool - Needle Adapter Set: 57001-1457

Amplifier Input Voltage
Connections to Amplifier Connector:
Digital Meter (+) → BR/W lead
Digital Meter (–) → BK/Y lead

- Measure the input voltage with the engine stopped and with the connector joined.
- Turn the ignition switch ON.

Input Voltage
Standard: Battery Voltage

- Turn the ignition switch OFF.

★If the reading is out of the standard, check the wiring (see wiring diagram in next section).
★If the reading is within the standard, check the wiring to ECU (see wiring diagram in next section).
★If the wiring is good, replace the amplifier (see Immobilizer System Parts Replacement in the Electrical System chapter).

Blank Key Detection (Service Code 36)

- This code appears in the following conditions.
  - ○The transponder [A] in the ignition key is malfunction.
  - ○When the spare key of unregistration is used.
  - ○When the ignition key is registered in the registered ECU.
- Therefore, the service code 36 will disappear when the above issue is solved.

Ignition Key Inspection

- Register the ignition key correctly (see Key Registration in the Electrical System chapter).

★If the service code 36 appears again, the transponder in the key is malfunction, replace it.

Immobilizer System Circuit

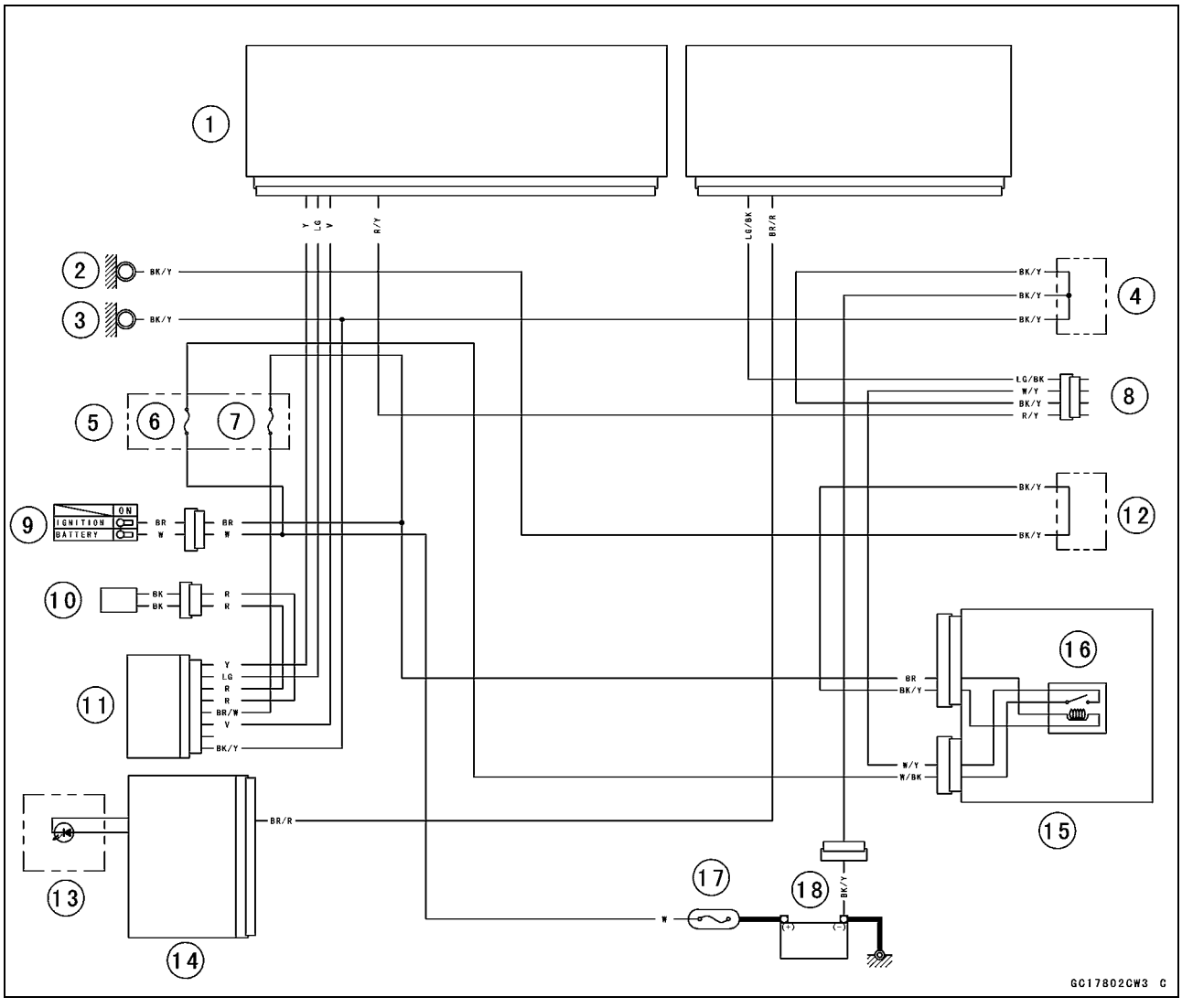

1. ECU
2. Frame Ground
3. Meter Ground
4. Water-proof Joint C
5. Fuse Box 2
6. ECU Fuse 10 A
7. Ignition Fuse 10 A
8. Immobilizer/Kawasaki Diagnostic System Connector
9. Ignition Switch
10. Immobilizer Antenna
11. Immobilizer Amplifier
12. Water-proof Joint B
13. Warning Indicator Light (LED) (FI/Immobilizer)
14. Meter Unit
15. Relay Box
16. ECU Main Relay
17. Main Fuse 30 A
18. Battery 12 V 8 Ah

ECU Communication Error (Service Code 39)

ECU Communication Line Inspection

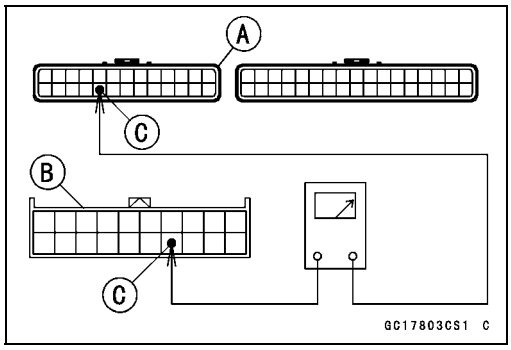

○When the data is not sent from the ECU to the meter unit for more than about 10 seconds, the service code 39 is displayed.
○The service code 39 is detected with meter unit.
● Remove the ECU and meter unit, check the wiring for continuity between main harness connector.
○Disconnect the ECU and meter unit connectors.

Wiring Inspection
ECU Connector [A] ←→ Meter Unit Connector [B]
BR/R lead (ECU terminal 52) [C]

★If the wiring is good, check the meter unit (see Meter Unit Inspection in the Electrical System chapter).
★If the meter unit is normal, replace the ECU (see ECU Removal/Installation).

ECU Communication Line Circuit

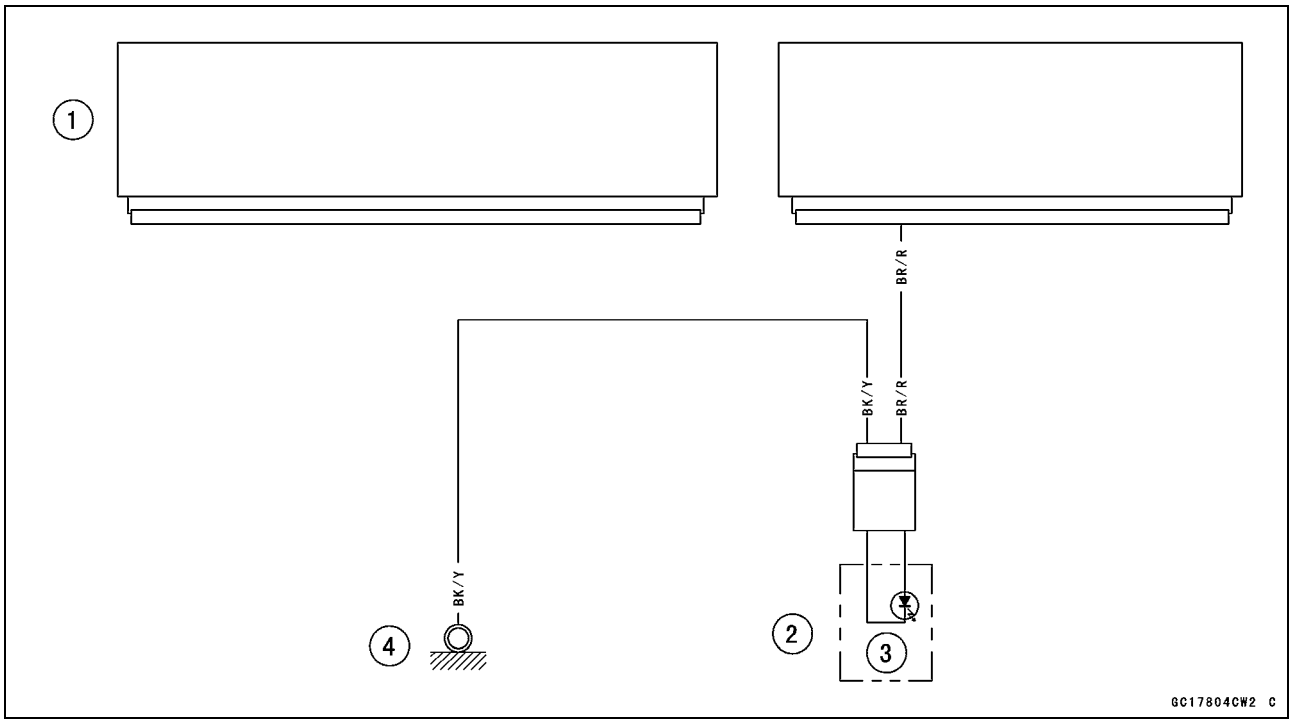

1. ECU
2. Meter Unit
3. Warning Indicator Light (LED)
4. Meter Ground

Stick Coils #1, #2, #3, #4 (Service Code 51, 52, 53, 54)

Stick Coil #1: Service Code 51
Stick Coil #2: Service Code 52
Stick Coil #3: Service Code 53
Stick Coil #4: Service Code 54

Stick Coil Removal/Installation

- Refer to the Stick Coil Removal/Installation in the Electrical System chapter.

Stick Coil Primary Winding Resistance Inspection

- Refer to the Stick Coil Inspection in the Electrical System chapter.

★If the reading is within the standard, check the input voltage (see Stick Coil Input Voltage Inspection).

Stick Coil Input Voltage Inspection

NOTE

○*Be sure the battery is fully charged.*

- Turn the ignition switch OFF.
- Remove the ECU (see ECU Removal).

○Do not disconnect the ECU connectors.

- Connect a digital meter [A] to the connector [B] with the needle adapter set.

Special Tool - Needle Adapter Set: 57001-1457

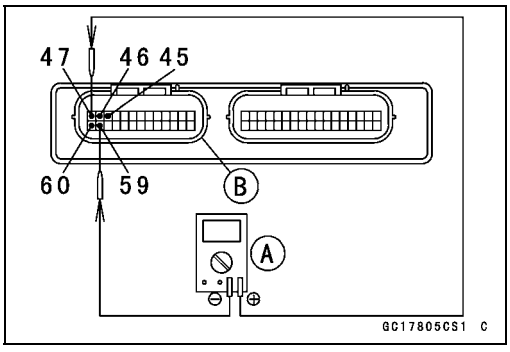

Stick Coil Input Voltage
Connections to ECU Connector:
For Stick Coil #1
Digital Meter (+) → BK lead (terminal 47)
Digital Meter (–) → BK/Y lead (terminal 59)
For Stick Coil #2
Digital Meter (+) → BK/G lead (terminal 46)
Digital Meter (–) → BK/Y lead (terminal 59)
For Stick Coil #3
Digital Meter (+) → BK/W lead (terminal 45)
Digital Meter (–) → BK/Y lead (terminal 59)
For Stick Coil #4
Digital Meter (+) → BK/O lead (terminal 60)
Digital Meter (–) → BK/Y lead (terminal 59)

- Measure the input voltage to each primary winding of the stick coils with the engine stopped and with the connectors joined.
- Turn the engine stop switch to run position.
- Turn the ignition switch ON.

Input Voltage
Standard: Battery Voltage

Stick Coils #1, #2, #3, #4 (Service Code 51, 52, 53, 54)

- Turn the ignition switch OFF.

★If the input voltage is out of the standard, check the wiring for continuity (see wiring diagram in this section).
★If the wiring is good, check the ECU for its ground and power supply (see ECU Power Supply Inspection).
★If the ground and power supply are good, replace the ECU (see ECU Removal/Installation).
★If the input voltage is within the standard, check the ECU for its ground and power supply (see ECU Power Supply Inspection).
★If the ground and power supply are good, replace the ECU (see ECU Removal/Installation).

Stick Coil Circuit

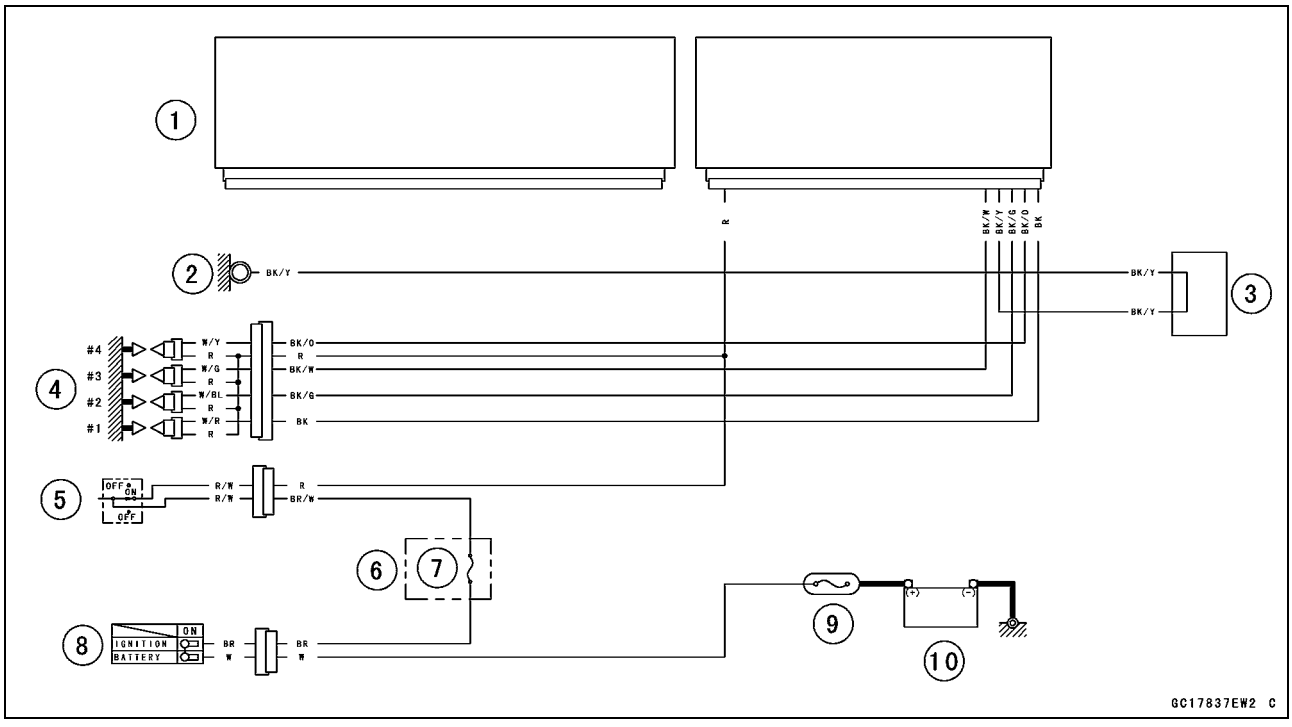

1. ECU
2. Frame Ground
3. Water-proof Joint B
4. Stick Coil #1, #2, #3, #4
5. Engine Stop Switch
6. Fuse Box 2
7. Ignition Fuse 10 A
8. Ignition Switch
9. Main Fuse 30 A
10. Battery 12 V 8 Ah

Radiator Fan Relay (Service Code 56)

Radiator Fan Relay Removal/Installation

○The radiator fan relay is built in the relay box [A].

● Refer to the Relay Box Removal in the Electrical System chapter.

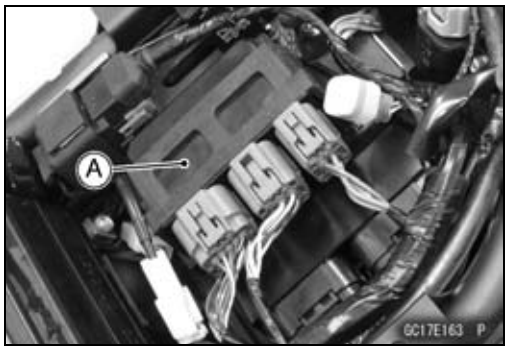

Radiator Fan Relay Inspection

● Refer to the Relay Circuit Inspection in the Electrical System chapter.

★If the radiator fan relay is normal, check the wiring for continuity (see wiring diagram in this section).

★If the wiring is good, check the ECU for its ground and power supply (see ECU Power Supply Inspection).

★If the ground and power supply are good, replace the ECU (see ECU Removal/Installation).

Radiator Fan Relay Circuit

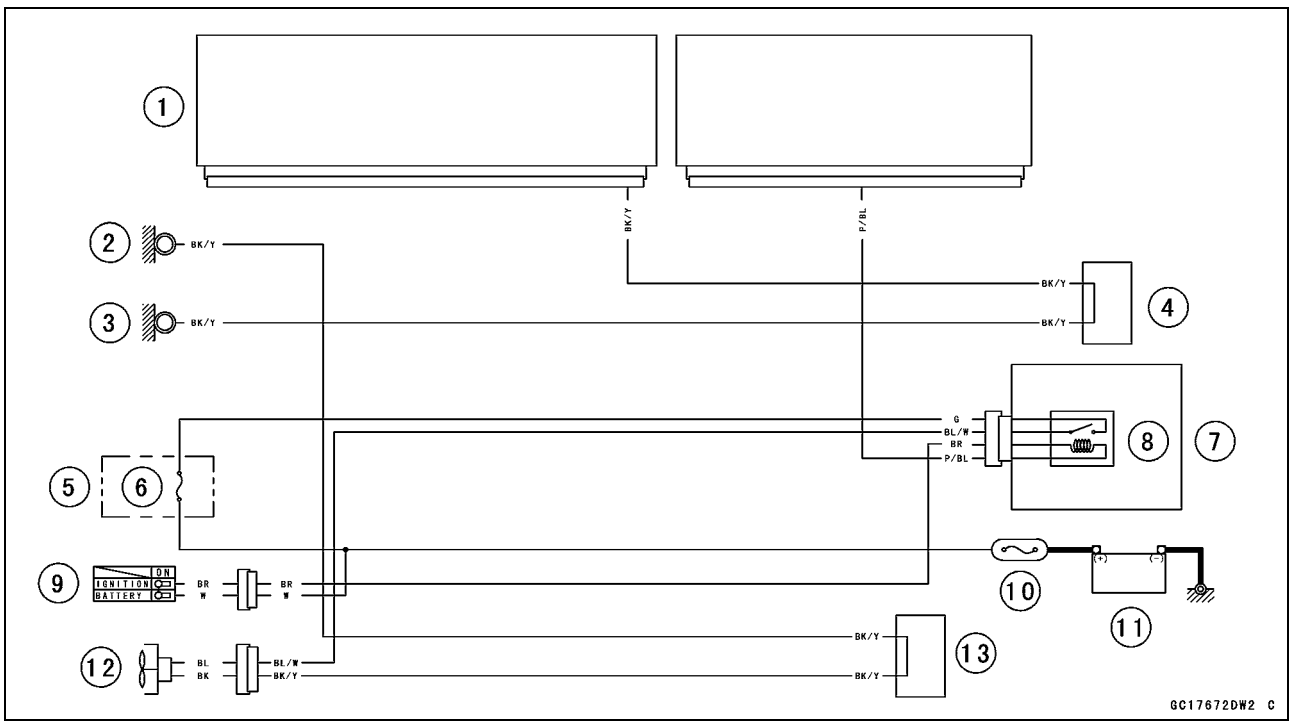

1. ECU
2. Frame Ground
3. Meter Ground
4. Water-proof Joint C
5. Fuse Box 2
6. Radiator Fan Fuse 15 A
7. Relay Box
8. Radiator Fan Relay
9. Ignition Switch
10. Main Fuse 30 A
11. Battery 12 V 8 Ah
12. Fan Motor
13. Water-proof Joint A

Subthrottle Valve Actuator (Service Code 62)

Subthrottle Valve Actuator Removal

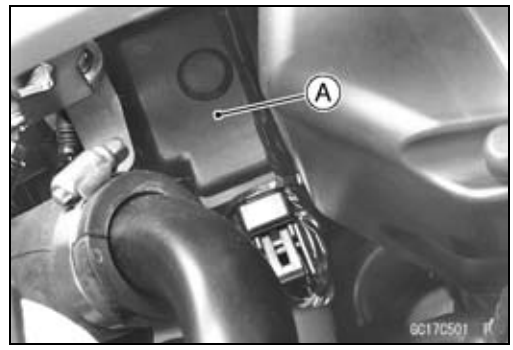

NOTICE

Do not remove the subthrottle valve actuator [A] since it has been adjusted and set with precision at the factory.
Never drop the throttle body assy especially on a hard surface. Such a shock to the subthrottle valve actuator can damage it.

Subthrottle Valve Actuator Inspection

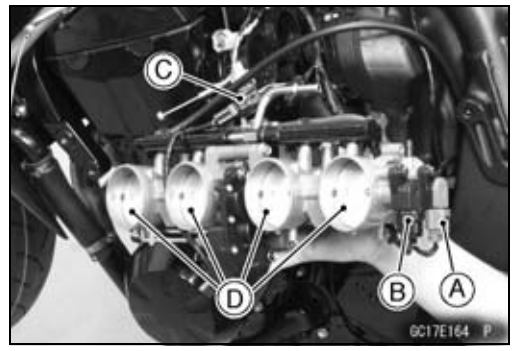

NOTE

○*Be sure the battery is fully charged.*

- Remove the throttle body assy (see Throttle Body Assy Removal).
- Connect the following parts temporally.
  Main Throttle Sensor Connector [A]
  Subthrottle Sensor Connector [B]
  Subthrottle Valve Actuator Harness Connector [C]
- Turn the ignition switch ON.
- Check to see that all the subthrottle valves [D] open and close smoothly.
- Turn the ignition switch OFF.

★If the subthrottle valves do not operate, check the subthrottle valve actuator resistance (see Subthrottle Valve Actuator Resistance Inspection).

Subthrottle Valve Actuator Resistance Inspection

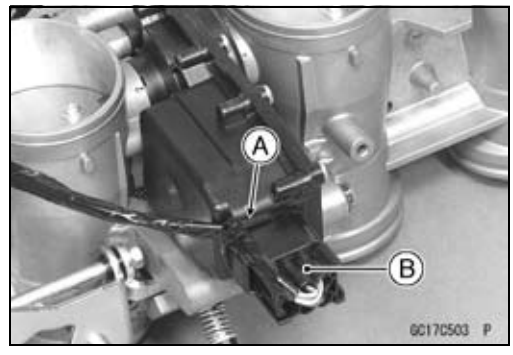

- Turn the ignition switch OFF.
- Cut the band [A], and disconnect the subthrottle valve actuator connector [B].

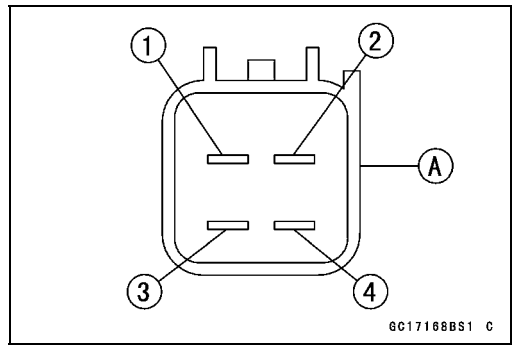

- Connect a digital meter to the subthrottle valve actuator connector [A].
- Measure the subthrottle valve actuator resistance.

Subthrottle Valve Actuator Resistance

Connections:	**BK/BL lead [1] ←→ P/BL lead [2]**
	G lead [3] ←→ W/BL lead [4]
Standard:	**About 5.2 ~ 7.8 Ω**

★If the reading is out of the standard, replace the throttle body assy.

★If the reading is within the standard, check the input voltage (see Subthrottle Valve Actuator Input Voltage Inspection).

Subthrottle Valve Actuator (Service Code 62)

Subthrottle Valve Actuator Input Voltage Inspection

NOTE

○*Be sure the battery is fully charged.*

- Turn the ignition switch OFF.
- Disconnect the subthrottle valve actuator connector and connect the harness adapter [A] between these connectors as shown in the figure.
  Main Harness [B]
  Subthrottle Valve Actuator [C]

Special Tool - Measuring Adapter: 57001-1700

- Connect the peak voltage adapter [D] and a digital meter [E] to the harness adapter leads.

Special Tool - Peak Voltage Adapter: 57001-1415
Type: KEK-54-9-B

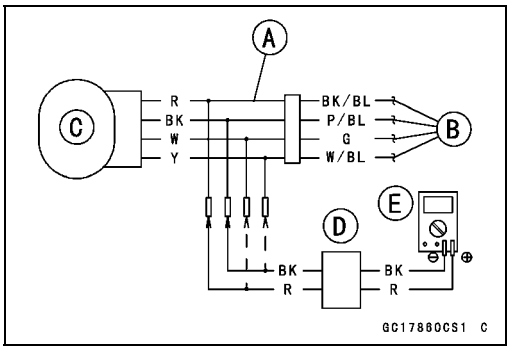

Subthrottle Valve Actuator Input Voltage Connections to Adapter:

(I) Digital Meter (+) → R (actuator BK/BL) lead
Digital Meter (–) → BK (actuator P/BL) lead
(II) Digital Meter (+) → W (actuator G) lead
Digital Meter (–) → Y (actuator W/BL) lead

- Measure the actuator input voltage with the engine stopped and with the connector joined.
- Turn the ignition switch ON.

Input Voltage
Standard: About DC 8.5 ~ 10.5 V, and then 0 V

- Turn the ignition switch OFF.

★If the reading is in specification, but the actuator does not operate, replace the throttle body assy.

★If the reading is out of the specification, remove the ECU and check the wiring for continuity between main harness connectors.

○Disconnect the ECU and actuator connectors.

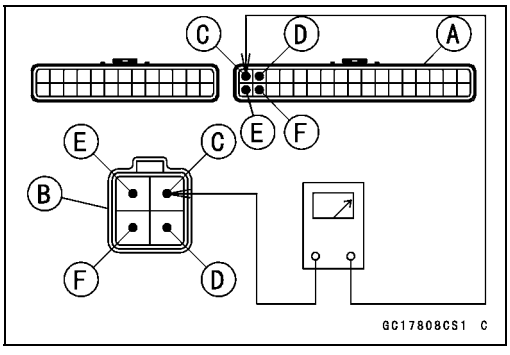

Wiring Inspection
ECU Connector [A] ←→
Subthrottle Valve Actuator Connector [B]
BK/BL lead (ECU terminal 1) [C]
G lead (ECU terminal 2) [D]
P/BL lead (ECU terminal 18) [E]
W/BL lead (ECU terminal 19) [F]

★If the wiring is good, check the ECU for its ground and power supply (see ECU Power Supply Inspection).

★If the ground and power supply are good, replace the ECU (see ECU Removal/Installation).

Subthrottle Valve Actuator (Service Code 62)

Subthrottle Valve Actuator Circuit

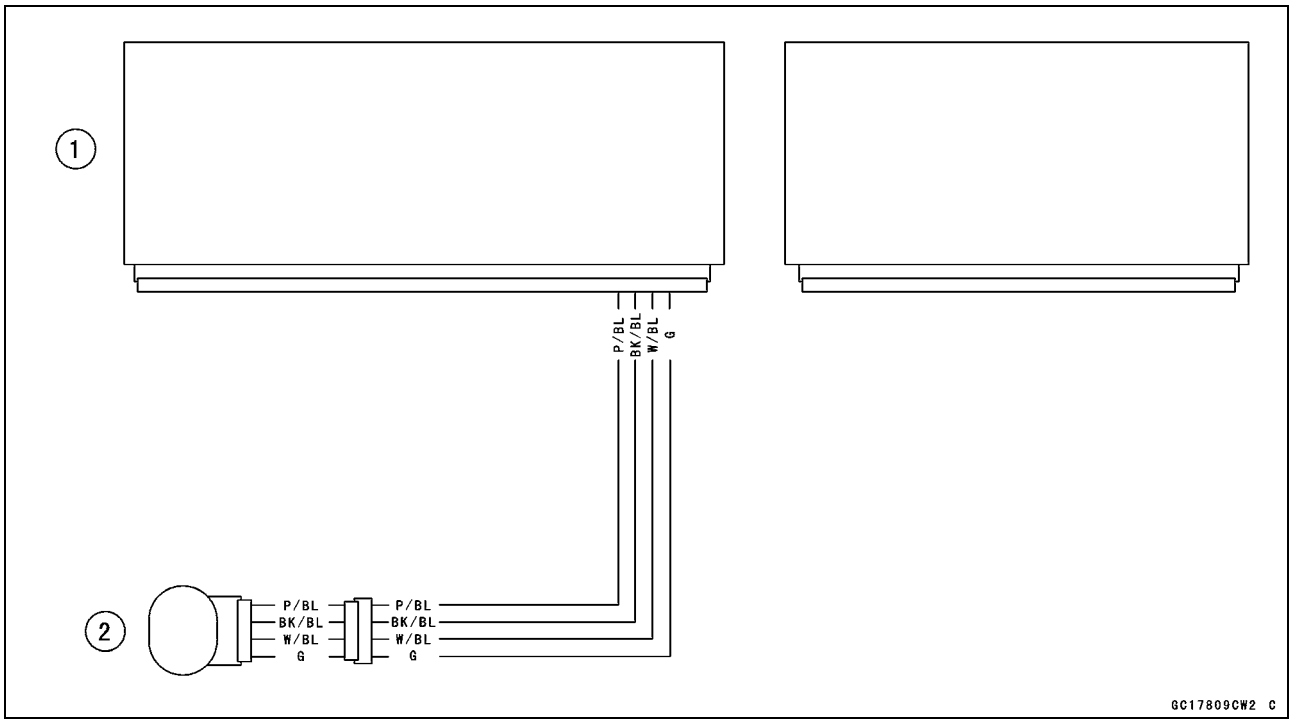

1. ECU
2. Subthrottle Valve Actuator

Exhaust Butterfly Valve Actuator (Service Code 63)

Exhaust Butterfly Valve Actuator Removal

NOTICE

Never drop the exhaust butterfly valve actuator especially on a hard surface. Such a shock to the actuator can damage it.

- Slide the dust covers [A].
- Loosen the locknuts [B], and turn the adjusters [C] to give the cable plenty of play.

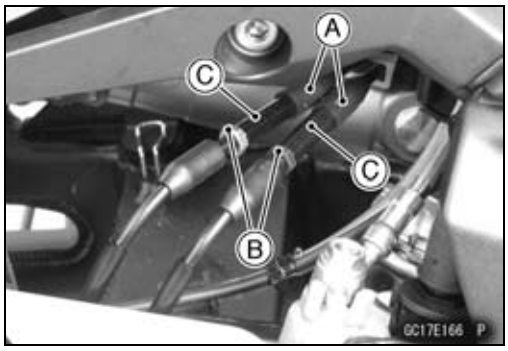

- Remove:
  Left Side Cover (see Side Cover Removal in the Frame chapter)
  Clamp [A]
  Exhaust Butterfly Valve Cables [B]
  Connectors [C] (Disconnect)

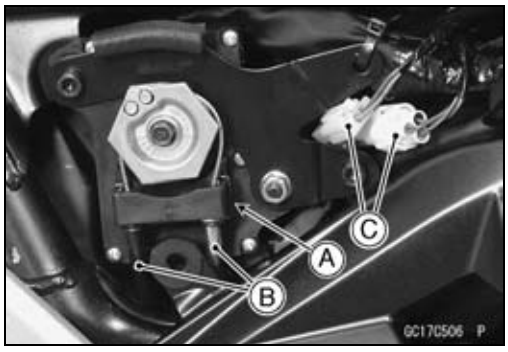

- Cut the band [A].
- Remove:
  Bolts [B]
  Exhaust Butterfly Valve Actuator [C] and Bracket [D]

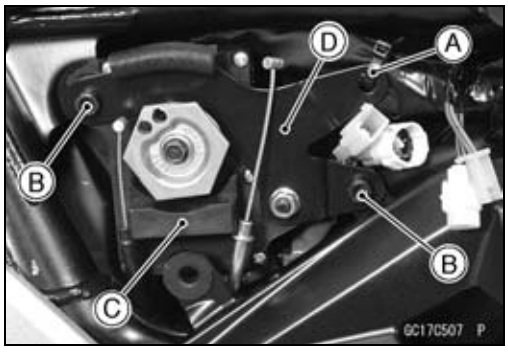

- Remove:
  Nut [A] and Bolt
  Bracket [B]

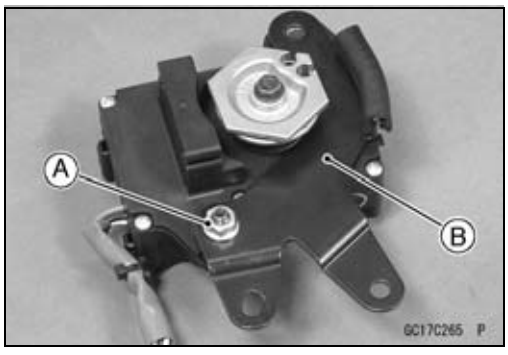

- Remove the pulley bolt while holding the pulley [A] with the suitable tool [B].

NOTICE

If the pulley bolt is removed without holding, the actuator damage will occur.

- Remove the pulley from the actuator.

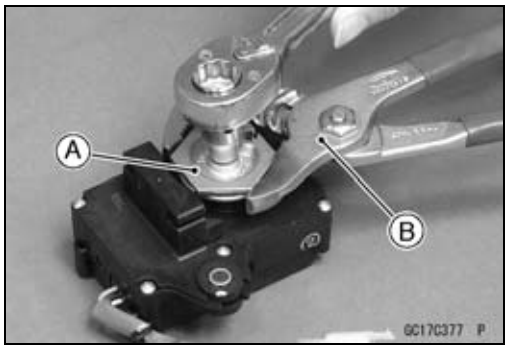

Exhaust Butterfly Valve Actuator (Service Code 63)

Exhaust Butterfly Valve Actuator Installation

- Install the pulley [A] on the actuator so that the hole side [B] align with the groove [C] on the shaft.

○Check that the groove on the shaft faces to the center of the screw [D] as shown in the figure.

○If not, adjust the position (see the procedure on the next page).

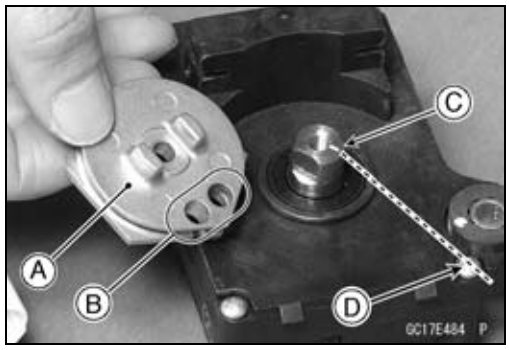

- Install the pulley [A] on the actuator as shown in the figure.
- Tighten the pulley bolt [B] while holding the pulley with the suitable tool [C].

Torque - Exhaust Butterfly Valve Actuator Pulley Bolt: 5.0 N·m (0.51 kgf·m, 44 in·lb)

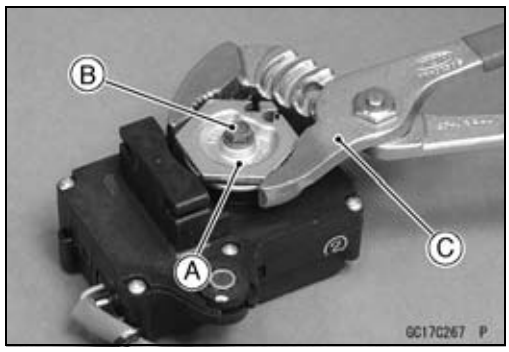

NOTICE
If the pulley bolt is tightened without holding, the actuator damage will occur.

- After tightening the pulley bolt, confirm whether pulley [A] is an angle shown in the figure.
  41.7° ±7° [B]

○This position is original position of the pulley.

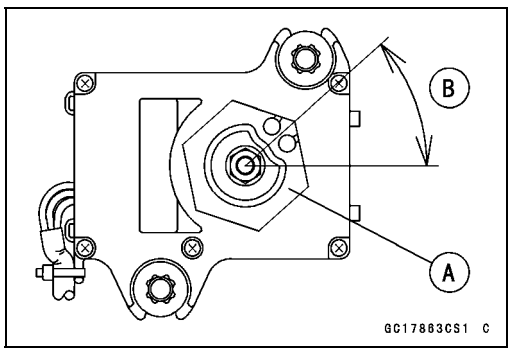

NOTE

○*Correct the position electrically after confirming the use is discontinued and there is no damage when differing from the angle of shown in the figure.*

NOTICE
Do not correct the pulley position with the tool, forcibly. The actuator damage will occur.

★If the pulley angle is wrong, adjust the angle as follows.

○Connect:
  2 pins Connector
  3 pins Connector

○Turn the ignition switch ON.

○Confirm the pulley turns clockwise and then counterclockwise.

○The pulley stops at this side of the original position by the learning control.

○The pulley returns to the original position.

Exhaust Butterfly Valve Actuator (Service Code 63)

★If the position is not within the specified angle above, adjust the angle as follows.
○Disconnect:
2 Pins Connector
3 Pins Connector
○Connect the 12 V battery to the 2 pins connector terminals. Connect the battery to one terminal first, and connect to another terminal lightly to adjust the pulley position until it returns to the original position.
Pink (–) lead terminal [A]
Gray (+) lead terminal [B]
Clockwise:
Pink (–) lead terminal and Battery (–) terminal
Gray (+) lead terminal and Battery (+) terminal
Counterclockwise:
Pink (–) lead terminal and Battery (+) terminal
Gray (+) lead terminal and Battery (–) terminal
○Connect:
2 Pins Connector
3 Pins Connector
○Turn the ignition switch ON.
○Confirm the pulley turns clockwise and then counterclockwise.
○The pulley stops at this side of the original position by the learning control.
○The pulley returns to the original position.
○Turn the ignition switch OFF.
★If the position is not within the specified angle above, replace the exhaust butterfly valve actuator.

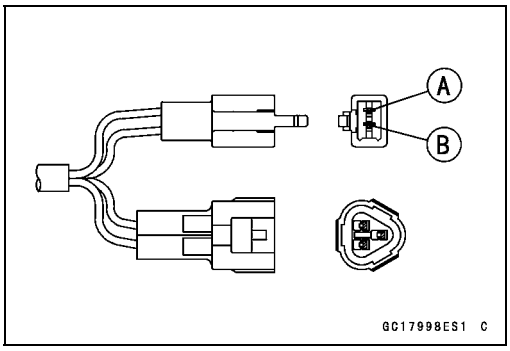

● Be sure that the trim [A] and damper [B] are in positions on the bracket [C] as shown in the figure.

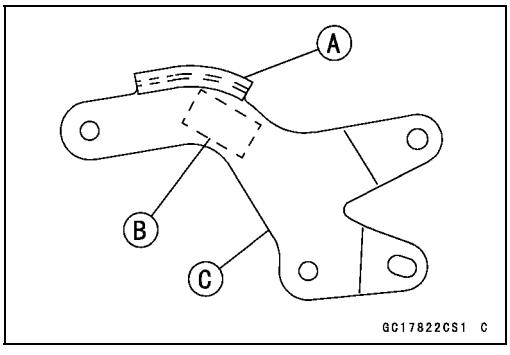

Exhaust Butterfly Valve Actuator (Service Code 63)

- Install the bracket [A] on the actuator [B].
  Washer [C]
  Nut [D]
  Bolt [E]
- Tighten:

  Torque - Exhaust Butterfly Valve Actuator Bracket Bolt: 6.9 N·m (0.70 kgf·m, 61 in·lb)
- Install the actuator and bracket on the frame [F].
  Bolts [G]
- Tighten:

  Torque - Exhaust Butterfly Valve Actuator Mounting Bolts: 6.9 N·m (0.70 kgf·m, 61 in·lb)
- Install the close cable first and then open cable (see Exhaust Butterfly Valve Cable Installation in the Engine Top End chapter).

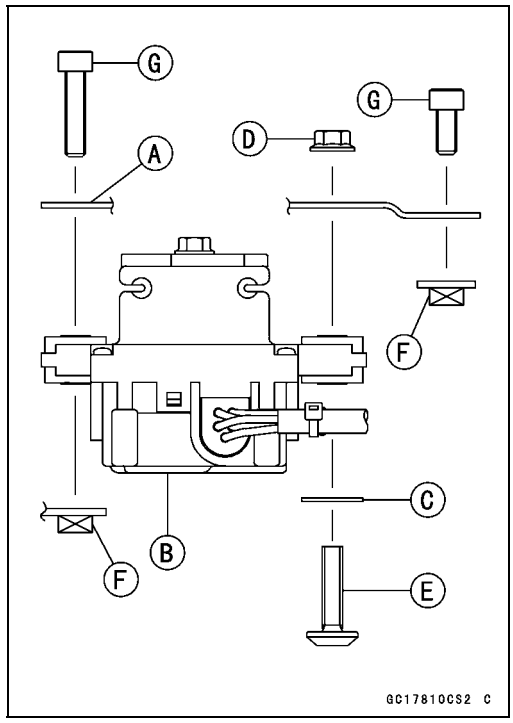

Exhaust Butterfly Valve Actuator Inspection

NOTE

○*Be sure the battery is fully charged*

- Remove the left side cover (see Side Cover Removal in the Frame chapter).
- Turn the ignition switch ON.
- Check to see the pulley [A] clockwise [B] and counterclockwise [C] smoothly.

○The pulley turns clockwise and then counterclockwise, and clockwise again.

- Turn the ignition switch OFF.

★If the pulley does not operate, check the exhaust butterfly valve actuator resistance (see Exhaust Butterfly Valve Actuator Inspection Resistance Inspection).

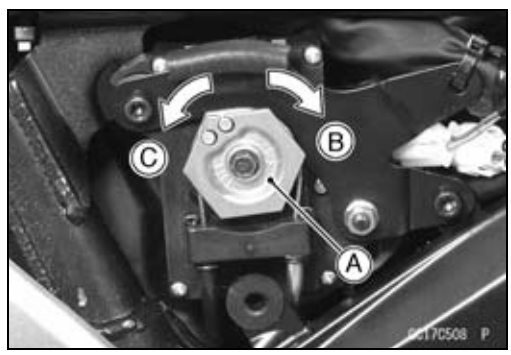

Exhaust Butterfly Valve Actuator Resistance Inspection

- Turn the ignition switch OFF.
- Disconnect the exhaust butterfly valve actuator lead connector (2 pins connector) [A].
- Set the hand tester to the × 1 Ω range and connect it to the exhaust butterfly valve actuator connector.

  Special Tool - Hand Tester: 57001-1394
- Measure the exhaust butterfly valve actuator resistance.

  Exhaust Butterfly Valve Actuator Resistance

Connections:	**P lead ←→ GY lead**
Standard:	**Any Reading Resistance (reference 5 ~ 200 Ω)**

★If the reading is 0 or infinity (∞) Ω, replace the exhaust butterfly valve actuator.

Exhaust Butterfly Valve Actuator (Service Code 63)

★If the reading is in specification, remove the ECU and check the wiring for continuity between main harness connectors.

○Disconnect the ECU and actuator connectors.

Wiring Inspection

ECU Connector [A] ←→

Exhaust Butterfly Valve Actuator Connector [B]

GY lead (ECU terminal 3) [C]

G/R lead (ECU terminal 4) [D]

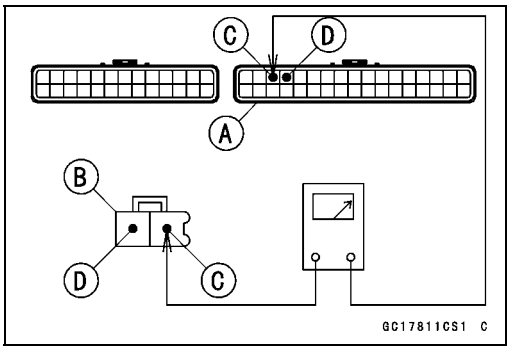

★If the wiring is good, check the ECU for its ground and power supply (see ECU Power Supply Inspection).

★If the ground and power supply are good, replace the ECU (see ECU Removal/Installation).

Exhaust Butterfly Valve Actuator Circuit

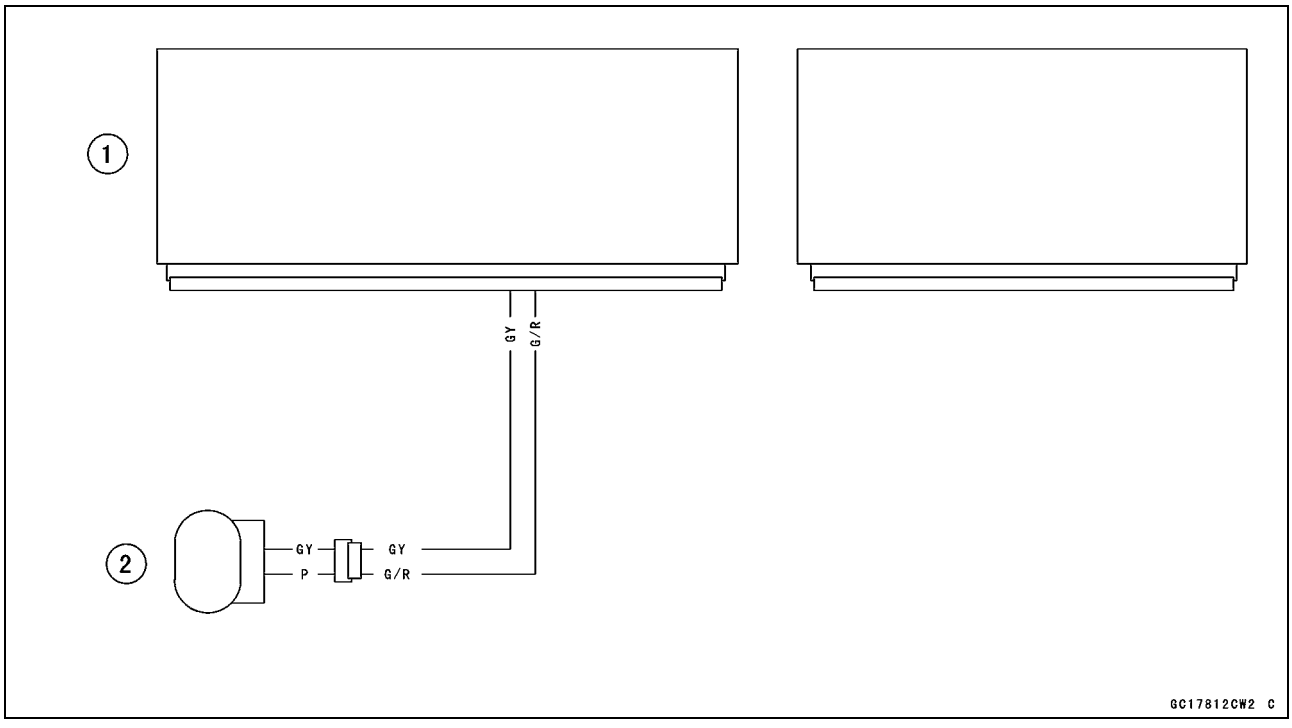

1. ECU
2. Exhaust Butterfly Valve Actuator

Air Switching Valve (Service Code 64)

Air Switching Valve Removal/Installation

- Refer to the Air Switching Valve Removal/Installation in the Engine Top End chapter.

Air Switching Valve Inspection

- Refer to the Air Switching Valve Unit Test in the Electrical System chapter.

★If the air switching valve is normal, check the wiring for continuity (see wiring diagram in this section).

★If the wiring is good, check the ECU for its ground and power supply (see ECU Power Supply Inspection).

★If the ground and power supply are good, replace the ECU (see ECU Removal/Installation).

Air Switching Valve Circuit

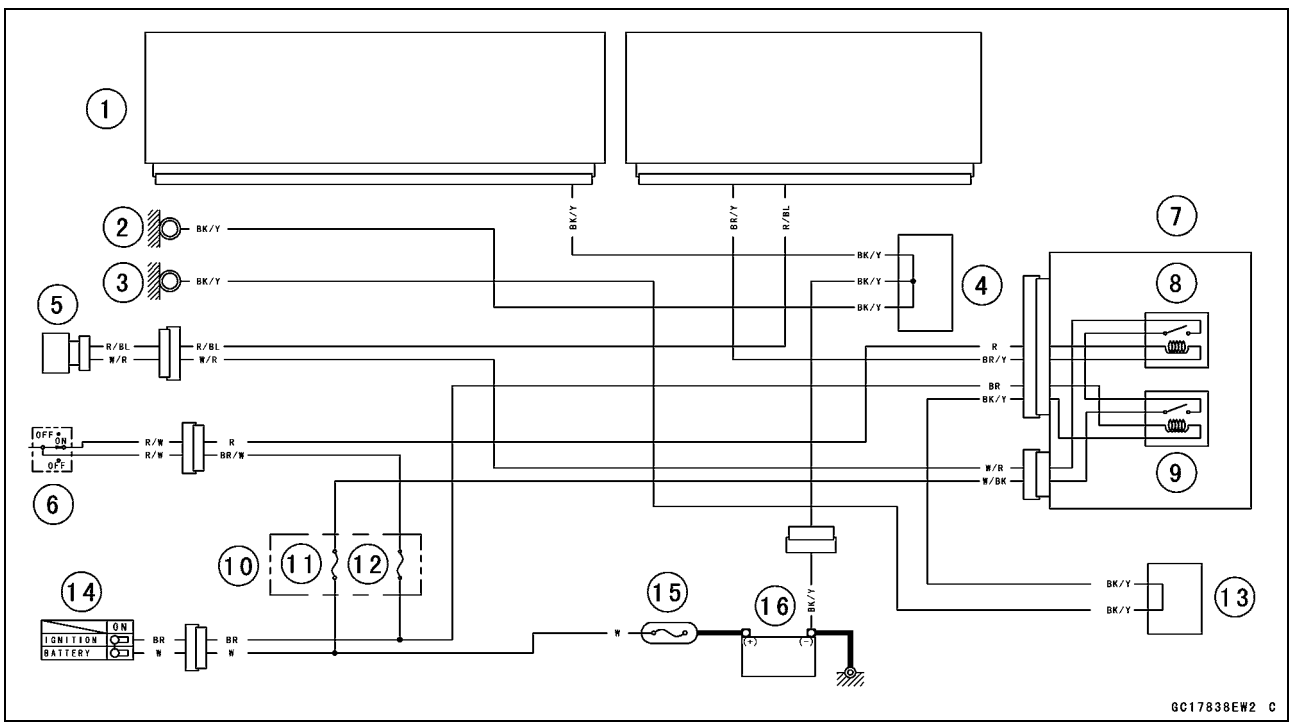

1. ECU
2. Meter Ground
3. Frame Ground
4. Water-proof Joint C
5. Air Switching Valve
6. Engine Stop Switch
7. Relay Box
8. Fuel Pump Relay
9. ECU Main Relay
10. Fuse Box 2
11. ECU Fuse 10 A
12. Ignition Fuse 10 A
13. Water-proof Joint B
14. Ignition Switch
15. Main Fuse 30 A
16. Battery 12 V 8 Ah

Oxygen Sensor Heater (Service Code 67)

Oxygen Sensor Heater Removal/Installation

The oxygen sensor heater is built in the oxygen sensor. So, the heater itself can not be removed. Remove the oxygen sensor (see Oxygen Sensor Removal in the Electrical System chapter).

Oxygen Sensor Heater Resistance Inspection

- Turn the ignition switch OFF.
- Remove:
  Right Frame Cover (see Frame Cover Removal in the Frame chapter)
  Bolt [A]

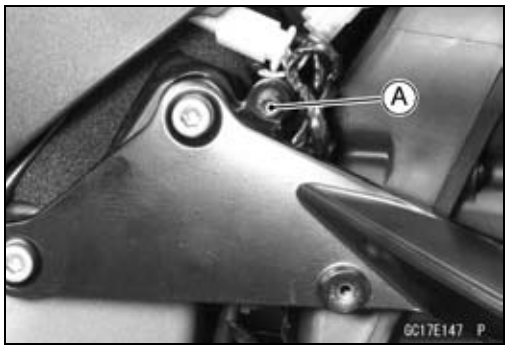

- Pull the oxygen sensor lead connector [A], crankshaft sensor lead connector and bracket downward.
- Disconnect the oxygen sensor lead connector.

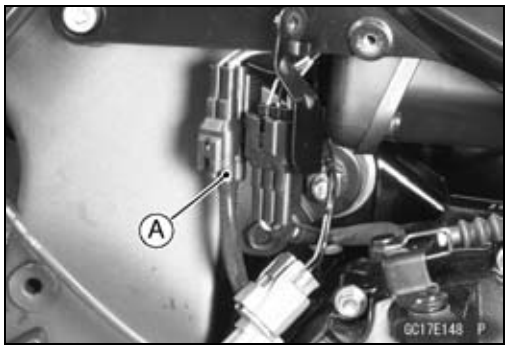

- Connect a digital meter [A] to the oxygen sensor lead connector [B].
- Measure the oxygen sensor heater resistance.

Oxygen Sensor Heater Resistance
Connections: BK lead [C] ←→ BK lead [D]
Standard: 11.7 ~ 15.5 Ω at 20C° (68°F)

★If the reading is out of the standard, replace the sensor.
★If the reading is within the standard, check the power source voltage (see Oxygen Sensor Heater Power Source Voltage Inspection).

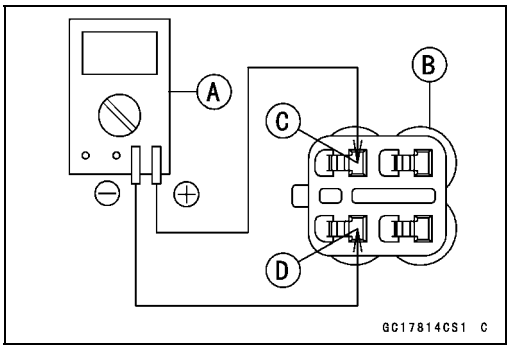

Oxygen Sensor Heater (Service Code 67)

Oxygen Sensor Heater Power Source Voltage Inspection

NOTE

○*Be sure the battery is fully charged.*

- Turn the ignition switch OFF.
- Disconnect the oxygen sensor lead connector and connect the harness adapter [A] between these connectors.

Special Tool - Oxygen Sensor Measuring Adapter: 57001 -1682

- Connect a digital meter to the harness adapter lead.

Oxygen Sensor Power Source Voltage
Connections to Adapter:

Digital Meter (+) → W/Y (sensor BK) lead

Digital Meter (–) → Battery (–) terminal

- Measure the power source voltage with the engine stopped and with the connector joined.
- Turn the ignition switch ON.

Power Source Voltage
Standard: Battery Voltage

- Turn the ignition switch OFF.

★If the reading is in specification, but the problem still exists, replace the ECU (see ECU Removal/Installation).

★If the reading is out of the standard, check the following.
Oxygen Sensor Heater Fuse 10 A (see Fuse Inspection in the Electrical System chapter)
Power Source Wiring (see wiring diagram in this section)

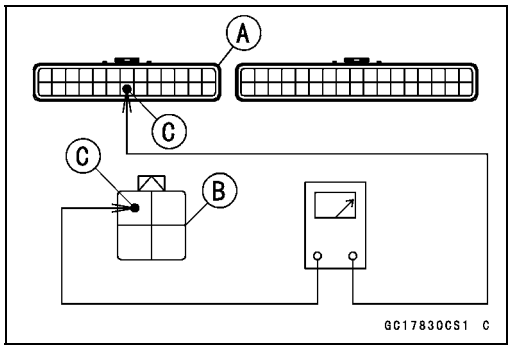

★If the fuse and wiring are good, remove the ECU and check the wiring for continuity between main harness connectors.

○Disconnect the ECU and sensor connectors.

Wiring Inspection
ECU Connector [A] ←→
Oxygen Sensor Connector [B]
R lead (ECU terminal 54) [C]

★If the wiring is good, check the ECU for its ground and power supply (see ECU Power Supply Inspection).

★If the ground and power supply are good, replace the ECU (see ECU Removal/Installation).

Oxygen Sensor Heater (Service Code 67)

Oxygen Sensor Circuit

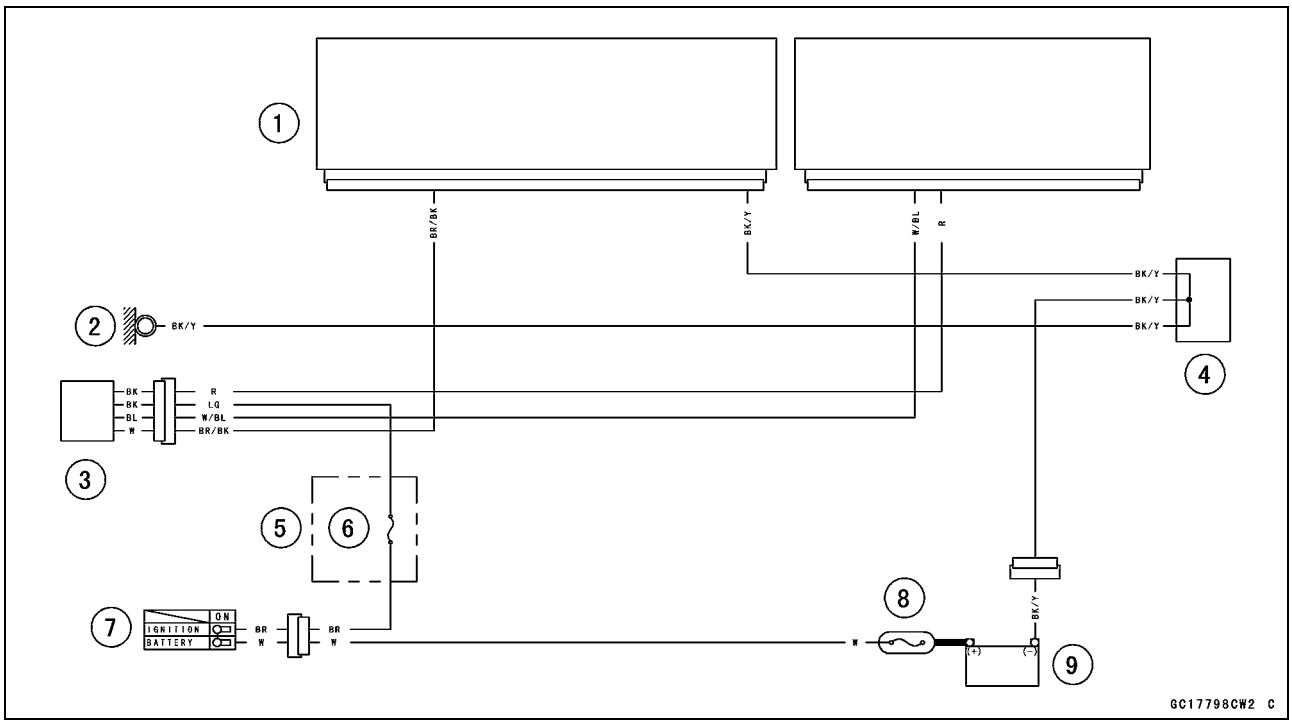

1. ECU
2. Meter Ground
3. Oxygen Sensor
4. Water-proof Joint C
5. Fuse Box 1
6. Oxygen Sensor Heater Fuse 10 A
7. Ignition Switch
8. Main Fuse 30 A
9. Battery 12 V 8 Ah

Oxygen Sensor - Incorrect Output Voltage (Service Code 94)

Oxygen Sensor Removal/Installation

- Refer to the Oxygen Sensor Removal/Installation in the Electrical System chapter.

Oxygen Sensor Inspection

- Turn the ignition switch OFF.
- Remove:
  Right Frame Cover (see Frame Cover Removal in the Frame chapter)
  Bolt [A]

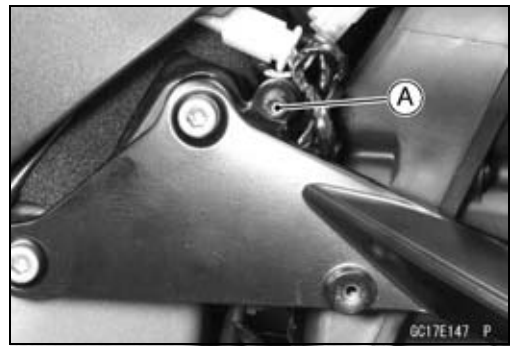

- Pull the oxygen sensor lead connector [A], crankshaft sensor lead connector and bracket downward.

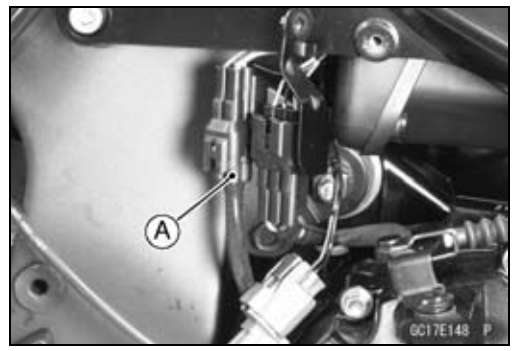

- Disconnect the oxygen sensor lead connector (4 pins connector) and connect the harness adapter [A] between these connectors.

  Special Tool - Oxygen Sensor Measuring Adapter: 57001 -1682

- Connect a digital meter to the harness adapter leads.

  Oxygen Sensor Output Voltage
  Connections to Adapter:
  Digital Meter (+) → BL/Y (sensor BL) lead
  Digital Meter (−) → BR/BK (sensor W) lead

- Remove the fuel tank (see Fuel Tank Removal).
- Separate the hose [A] from the air cleaner housing.

Oxygen Sensor - Incorrect Output Voltage (Service Code 94)

- Remove the connector [A] from the bracket [B].

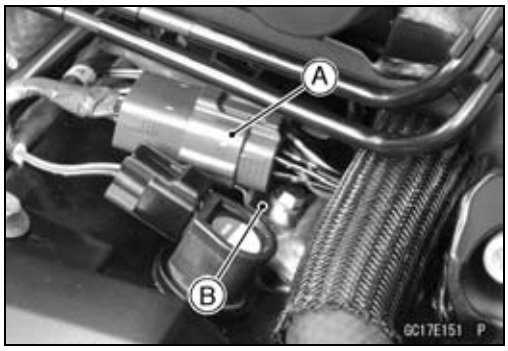

- Separate the hoses [A] from the air suction valve covers.

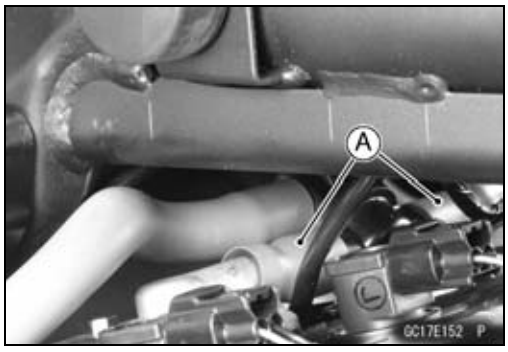

- Pull the air switching valve [A] and hoses out to the left side of the motorcycle.

○Do not disconnect the air switching valve connector [B].

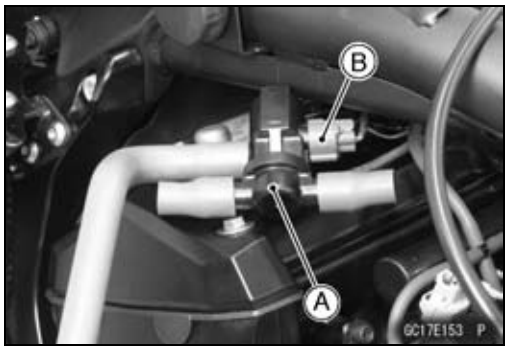

- Install the suitable plugs [A] on the fitting of the air suction valve covers, and shut off the secondary air.

- Remove the fuel outlet hose (see Fuel Hose Replacement in the Periodic Maintenance chapter).
- Connect the following parts temporary.
  Fuel Pump Lead Connector [A]
  Fuel Level Sensor Lead Connector [B]
  Extension Tube [C]

  Special Tool - Extension Tube: 57001-1578

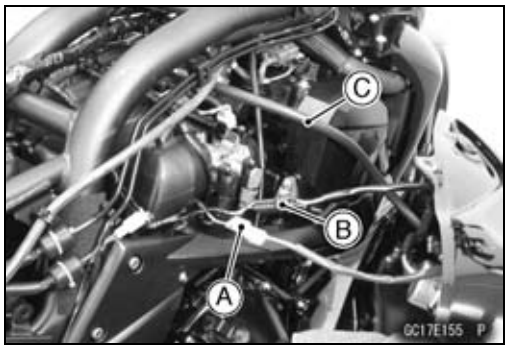

Oxygen Sensor - Incorrect Output Voltage (Service Code 94)

- Start the engine, and let it idle.
- Warm up the engine thoroughly until the radiator fan starts.
- Measure the output voltage with the connector joined.

Output Voltage (with Plugs)
Standard: DC 0.7 V or more

- Next, remove the plugs from the fittings [A] with idling.

⚠ WARNING

The engine gets extremely hot during normal operation and can cause serious burns. Never touch a hot engine.

- Measure the output voltage with the connector joined.

Output Voltage (without Plugs)
Standard: DC 0.2 V or less

- Turn the ignition switch OFF.

★If the reading is out of the standard (with plugs: DC 0.7 V or more, without plugs: DC 0.2 V or less), check the following.
Fuel Pressure (see Fuel Pressure Inspection)
Fuel Injector (see Fuel Injectors section)

★If the fuel pressure and fuel injectors are good, replace the sensor.

★If the reading is within the standard (with plugs: DC 0.7 V or more, without plugs: DC 0.2 V or less), check the ECU for its ground and power supply (see ECU Power Supply Inspection).

★If the ground and power supply are good, replace the ECU (see ECU Removal/Installation).

Oxygen Sensor - Incorrect Output Voltage (Service Code 94)

Oxygen Sensor Circuit

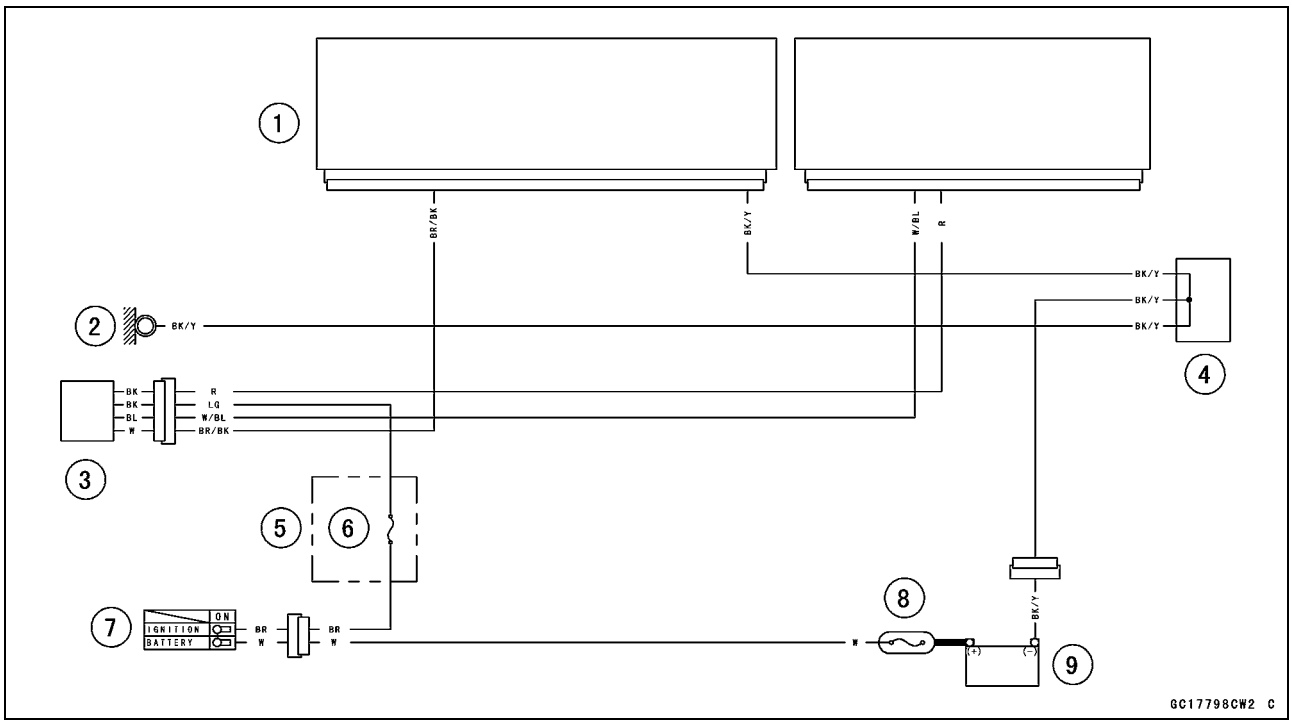

1. ECU
2. Meter Ground
3. Oxygen Sensor
4. Water-proof Joint C
5. Fuse Box 1
6. Oxygen Sensor Heater Fuse 10 A
7. Ignition Switch
8. Main Fuse 30 A
9. Battery 12 V 8 Ah

Warning Indicator Light (LED)

Light (LED) Inspection

○The warning indicator light (LED) [A] is used for the FI indicator, immobilizer indicator and oil pressure warning indicator.

○In this model, the warning indicator light (LED) (FI/immobilizer) blink by the data sent from the ECU.

● Refer to the Meter Unit Inspection in the Electrical System chapter for the warning indicator light (LED) (FI/immobilizer) inspection.

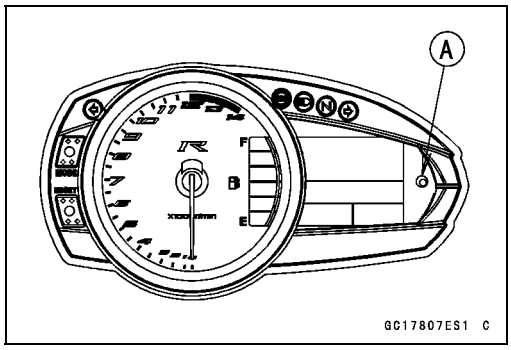

Warning Indicator Light (LED) (FI/Immobilizer) Circuit

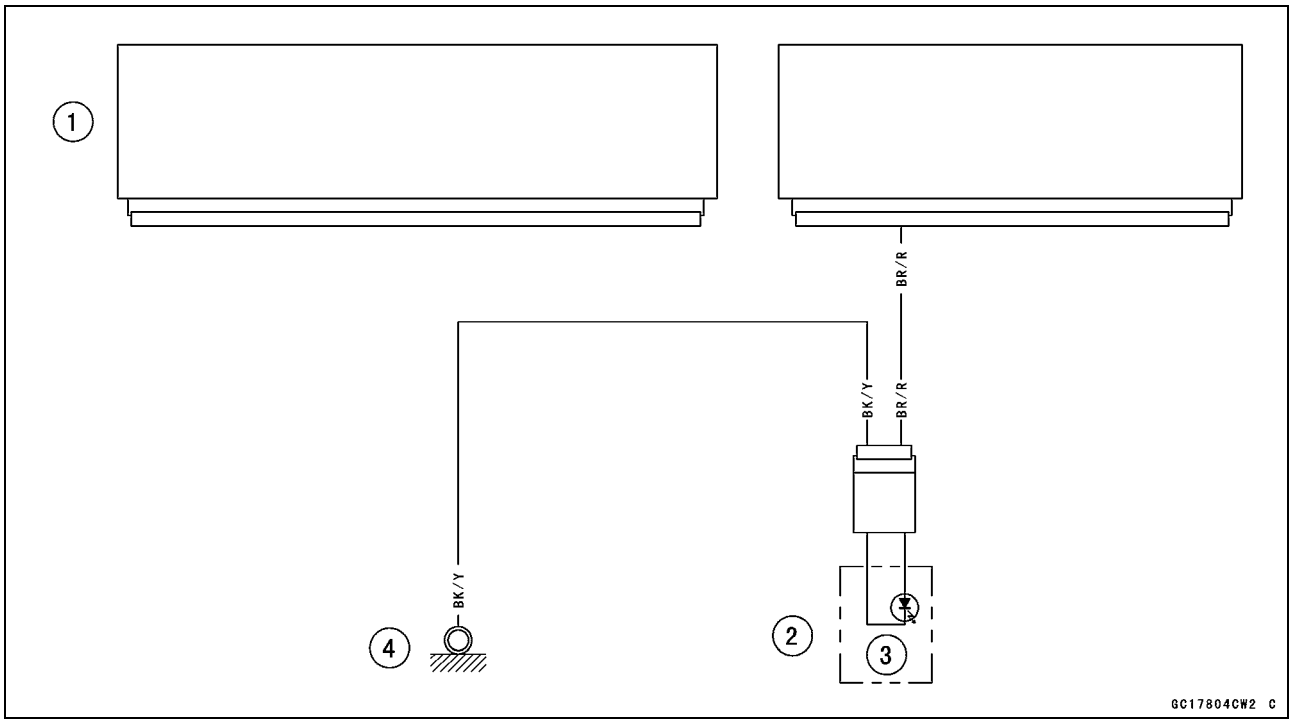

1. ECU
2. Meter Unit
3. Warning Indicator Light (LED)
4. Meter Ground

ECU

ECU Identification

○Most countries have their own regulations, so each ECU has different characteristic. So, do not confuse ECU with each other and use only the ECU for your model. Otherwise, the motorcycle cannot clear the regulation.

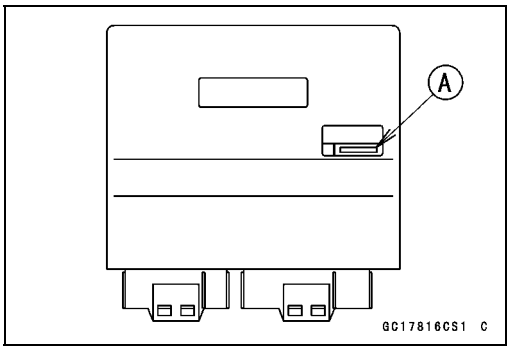

ECU Identification

Part Number [A]	Specification
21175-0341	WVTA (Full H) GB WVTA (Full H) WVTA (78.2 H)

Full: Full Power
H: Honeycomb Type Catalyst
78.2: Maximum Hosepower 78.2 kw (106.3 PS)

ECU Removal

NOTICE

Never drop the ECU especially on a hard surface. Such a shock to the ECU can damage it.

NOTE

○*Refer to the Immobilizer System Parts Replacement in the Electrical System chapter for the immobilizer models (see Immobilizer System Parts Replacement in the Electrical System chapter).*

- Remove the relay box (see Relay Box Removal in the Electrical System chapter).
- Lift up the ECU [A] with rubber protector [B].

- Remove:
  ECU Connectors [A] (Disconnect)
  ECU [B]

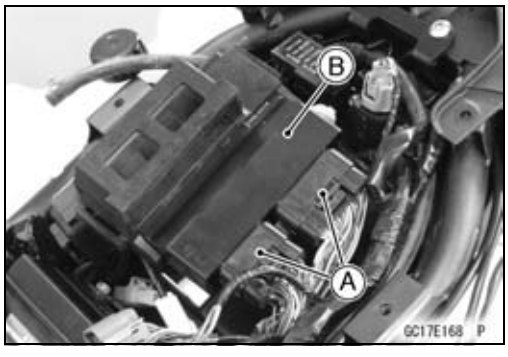

ECU

ECU Installation

- Install:
  ECU [A] (In Rubber Protector [B])
  ECU Connectors [C] (Connect)

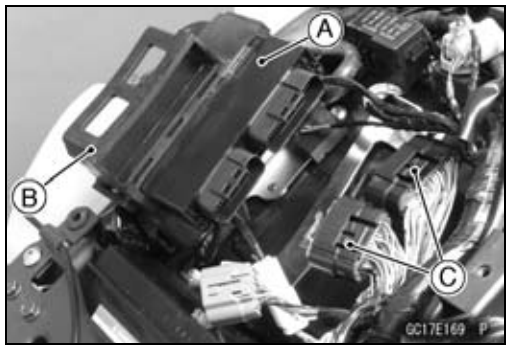

- Insert the slits of the rubber protector to the projections [A] of the bracket.

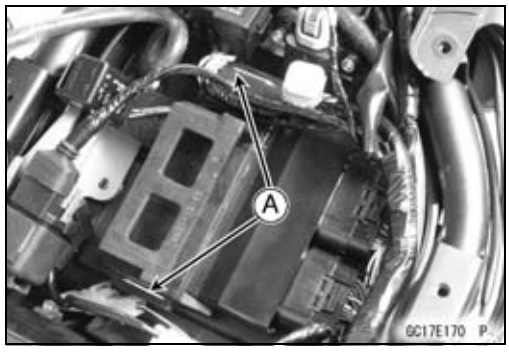

ECU Power Supply Inspection

- Remove the relay box (see Relay Box Removal in the Electrical System chapter).
- Visually inspect the ECU connectors.

★If the connector is clogged with mud or dust, blow it off with compressed air.

- Remove the ECU (see ECU Removal).
- Visually inspect the terminals [A] of the ECU connectors.

★If the terminals of the main harness connectors are damaged, replace the main harness.

★If the terminals of the ECU connectors are damaged, replace the ECU.

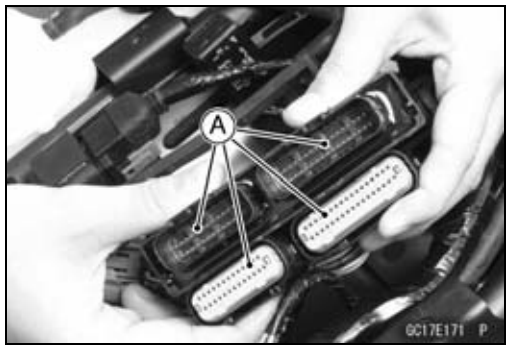

- Turn the ignition switch OFF.
- Disconnect the ECU connectors [A].
- Set the hand tester [B] to the × 1 Ω range and check the following wiring for continuity.

Special Tool - Hand Tester: 57001-1394

ECU Grounding Inspection

Connections:

(I) BK/Y leads (ECU terminal 34, 58 or 59) ←→ Battery (–) Terminal

(II) Engine Ground ←→ Battery (–) Terminal

Criteria:

Both: 0 Ω

★If no continuity, check the connectors, the engine ground lead, or main harness, and repair or replace them if necessary.

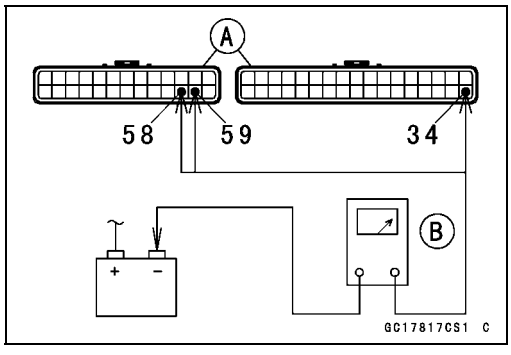

★If the wiring is good, check the power source voltage of the ECU.

NOTE

○*Be sure the battery is fully charged.*

- Connect the ECU connectors.
- Connect a digital meter [A] to the connector [B] with the needle adapter set.

Special Tool - Needle Adapter Set: 57001-1457

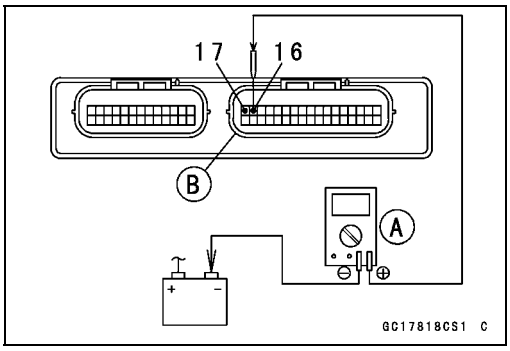

ECU Power Supply Inspection

Connections:

(I) Digital Meter (+) → Terminal 16 (W/Y)

Digital Meter (–) → Battery (–) terminal

(II) Digital Meter (+) → Terminal 17 (W/BK)

Digital Meter (–) → Battery (–) terminal

Ignition Switch OFF:

Terminal 16 (W/Y): 0 V

Terminal 17 (W/BK): Battery Voltage

Ignition Switch ON:

Both: Battery Voltage

★If the reading is out of the specification, check the following.

Main Fuse 30 A (see Fuse Inspection in the Electrical System chapter)

ECU Fuse 10 A (see Fuse Inspection in the Electrical System chapter)

ECU Main Relay (see Relay Circuit Inspection in the Electrical System chapter)

Power Source Wiring (see wiring diagram in this section)

★If the fuse, wiring and relay are good, replace the ECU (see ECU Removal/Installation).

ECU

ECU Power Source Circuit

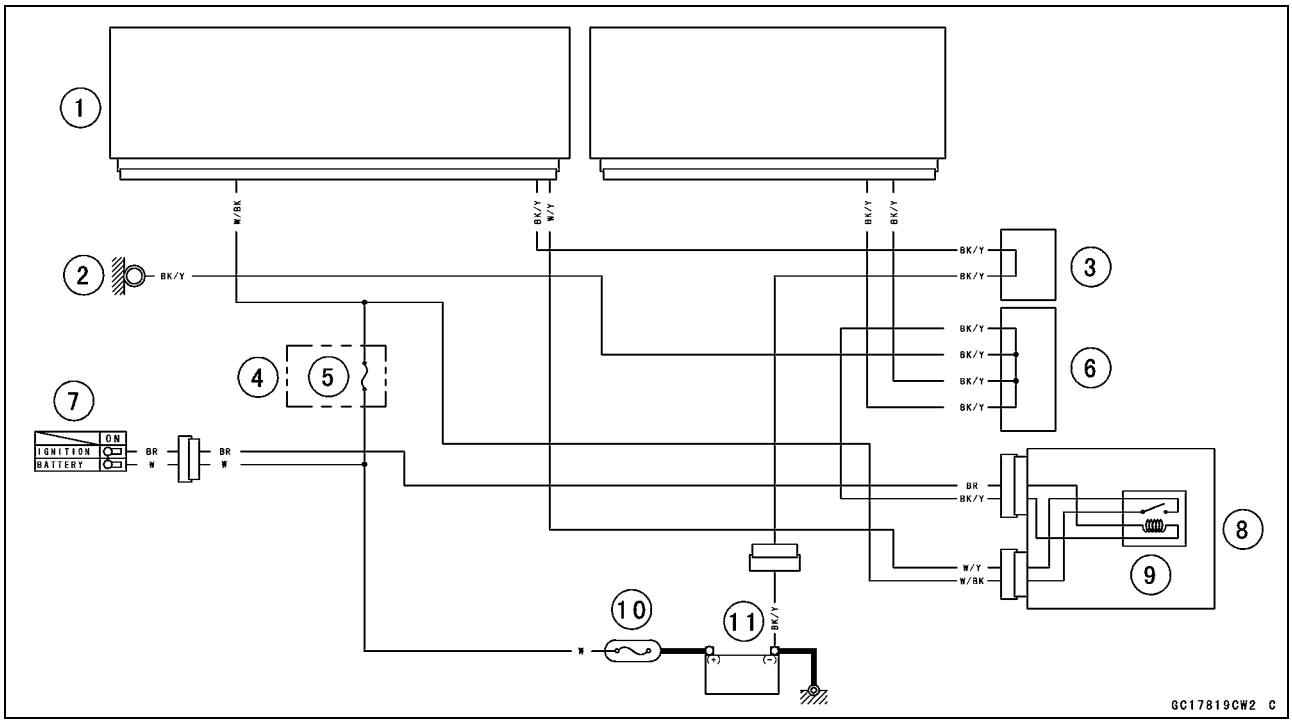

1. ECU
2. Frame Ground
3. Water-proof Joint C
4. Fuse Box 2
5. ECU Fuse 10 A
6. Water-proof Joint B
7. Ignition Switch
8. Relay Box
9. ECU Main Relay
10. Main Fuse 30 A
11. Battery 12 V 8 Ah

DFI Power Source

ECU Fuse Removal

- Refer to the 10 A ECU Fuse Removal in the Electrical System chapter.

ECU Fuse Installation

★If a fuse fails during operation, inspect the DFI system to determine the cause, and then replace it with a new fuse of proper amperage.

- Refer to the Fuse Installation in the Electrical System chapter.

ECU Fuse Inspection

- Refer to the Fuse Inspection in the Electrical System chapter.

ECU Main Relay Removal/Installation

○The ECU main relay is built in the relay box [A].

- Refer to the Relay Box Removal in the Electrical System chapter.

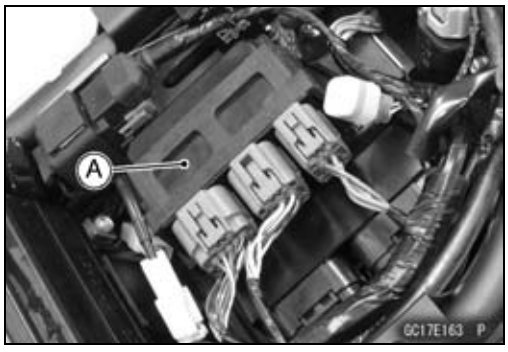

ECU Main Relay Inspection

- Refer to the Relay Circuit Inspection in the Electrical System chapter.

Fuel Line

Fuel Pressure Inspection

NOTE

○*Be sure the battery is fully charged.*

- Remove:
  Fuel Tank (see Fuel Tank Removal)
  Fuel Outlet Hose (see Fuel Hose Replacement in the Periodic Maintenance chapter)

○Be sure to place a piece of cloth around the fuel outlet pipe of the fuel pump and the delivery pipe of the throttle body assy.

⚠ WARNING

Fuel is flammable and explosive under certain conditions and can cause severe burns. Be prepared for fuel spillage; any spilled fuel must be completely wiped up immediately. When the fuel hose is disconnected, fuel spills out from the hose and the pipe because of residual pressure. Cover the hose connection with a piece of clean cloth to prevent fuel spillage.

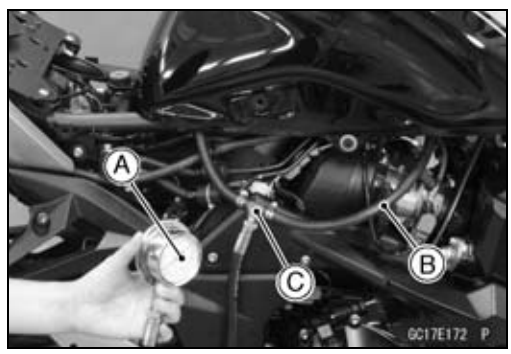

- Install the fuel pressure gauge adapter [A] and fuel hoses (Special Tool: 57001-1607) [B] between the fuel outlet pipe and delivery pipe.
- Secure the fuel hoses with the clamps.
- Connect the pressure gauge [C] to the fuel pressure gauge adapter.

Special Tools - Oil Pressure Gauge, 5 kgf/cm²: 57001-125
Fuel Pressure Gauge Adapter: 57001-1593
Fuel Hose: 57001-1607

⚠ WARNING

Fuel is extremely flammable and can be explosive under certain conditions resulting in serious injury or death. Do not try to start the engine with the fuel hoses disconnected.

- Connect:
  Fuel Pump Lead Connector
  Fuel Level Sensor Lead Connector
- Turn the engine stop switch run position.
- Turn the ignition switch ON.

○The fuel pump should operate for 3 seconds, and then should stop.

NOTE

○*After turning on the engine stop switch and ignition switch, inspect the fuel leakage from the connected portion of the special tools.*

NOTICE

Do not drive the fuel pump 3 seconds or more without the fuel in the fuel tank. If the fuel pump is driven without the fuel, it may be damaged.

Fuel Line

- Start the engine, and let it idle.
- Measure the fuel pressure with the engine idling.

Fuel Pressure (with Engine Idling)
Standard: 294 kPa (3.0 kgf/cm², 43 psi)

NOTE

○*The gauge needle will fluctuate. Read the pressure at the average of the maximum and minimum indications.*

- Turn the ignition switch OFF.

★If the fuel pressure is much higher than specified, replace the fuel pump because the fuel pressure regulator in the fuel pump have been clogged or stuck.

★If the fuel pressure is much lower than specified, check the following.
Fuel Line Leakage (see Fuel Injector Fuel Line Inspection)
Amount of Fuel Flow (see Fuel Flow Rate Inspection)

- After above checks, measure the fuel pressure again.
- Remove the fuel pressure gauge, hoses and adapter.
- Install:
Fuel Outlet Hose (see Fuel Hose Replacement in the Periodic Maintenance chapter)
Fuel Tank (see Fuel Tank Installation)
- Start the engine and check for fuel leakage.

Fuel Flow Rate Inspection

⚠ WARNING

Gasoline is extremely flammable and can be explosive under certain conditions, creating the potential for serious burns. Make sure the area is well-ventilated and free from any source of flame or sparks; this includes any appliance with a pilot light. Do not smoke. Turn the ignition switch OFF. Be prepared for fuel spillage; any spilled fuel must be completely wiped up immediately.

NOTE

○*Be sure the battery is fully charged.*

- Turn the ignition switch OFF.
- Wait until the engine cools down.
- Prepare a fuel hose (Special Tool: 57001-1607) and a measuring cylinder.

Special Tool - Fuel Hose: 57001-1607

- Remove the fuel tank bolt (see Fuel Tank Removal).

Fuel Line

- Open the fuel tank cap [A] to lower the pressure in the tank.
- Remove the fuel outlet hose from the fuel pump (see Fuel Tank Removal).

○Be sure to place a piece of cloth around the fuel outlet pipe of the fuel pump.

⚠ WARNING

Fuel is flammable and explosive under certain conditions and can cause severe burns. Be prepared for fuel spillage; any spilled fuel must be completely wiped up immediately. When the fuel hose is disconnected, fuel spills out from the hose and the pipe because of residual pressure. Cover the hose connection with a piece of clean cloth to prevent fuel spillage.

- Connect the prepared fuel hose [A] to the fuel outlet pipe.
- Secure the fuel hose with a clamp.
- Insert the fuel hose into the measuring cylinder [B].

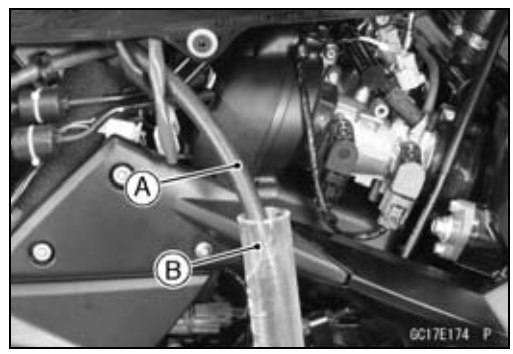

⚠ WARNING

Wipe off spilled out fuel immediately.
Be sure to hold the measuring cylinder vertical.

- Close the fuel tank cap.
- Turn the engine stop switch to run position.
- Turn the ignition switch ON.

○The fuel pump should operate for 3 seconds, and then should stop.

NOTICE

Do not drive the fuel pump 3 seconds or more without the fuel in the fuel tank. If the fuel pump is driven without the fuel, it may be damaged.

- Measure the discharge for 3 seconds.

○Repeat this operation several times.

Amount of Fuel Flow
Standard: 50 mL (1.7 US oz.) or more for 3 seconds

- Turn the ignition switch OFF.

★If the fuel flow is much less than the specified, replace the fuel pump (see Fuel Pump Removal/Installation).

- Install the fuel tank (see Fuel Tank Installation).
- Start the engine and check for fuel leakage.

Fuel Pump

Fuel Pump Removal

⚠ WARNING

Gasoline is extremely flammable and can be explosive under certain conditions, creating the potential for serious burns. Make sure the area is well-ventilated and free from any source of flame or sparks; this includes any appliance with a pilot light. Do not smoke. Turn the ignition switch OFF. Disconnect the battery (–) terminal. To avoid fuel spills, draw it from the tank when the engine is cold. Be prepared for fuel spillage; any spilled fuel must be completely wiped up immediately.

NOTICE

Never drop the fuel pump especially on a hard surface. Such a shock to the pump can damage it.

- Draw the fuel out from the fuel tank with a commercially available electric pump.
- Remove the fuel tank (see Fuel Tank Removal).

○Be careful of fuel spillage from the fuel tank since fuel still remains in the fuel tank and fuel pump. Plug the fuel pipe of the fuel tank.

- Turn the fuel tank upside down.
- Remove the fuel intake hose [A].
- Unscrew the fuel pump bolts [B], and take out the fuel pump [C].

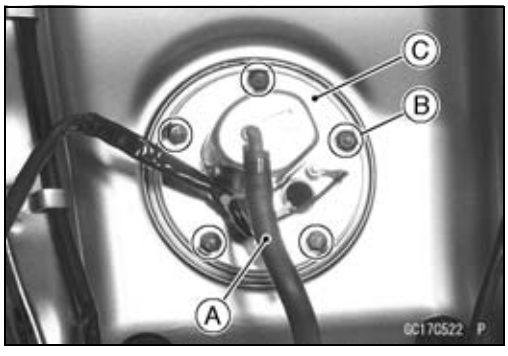

NOTICE

Do not pull the leads of the fuel pump. If they are pulled, the lead terminals may be damaged.

- Discard the fuel pump gasket [A].

Fuel Pump

Fuel Pump Installation

- Remove dirt or dust from the fuel pump [A] by lightly applying compressed air.
- Replace the fuel pump gasket with a new one.

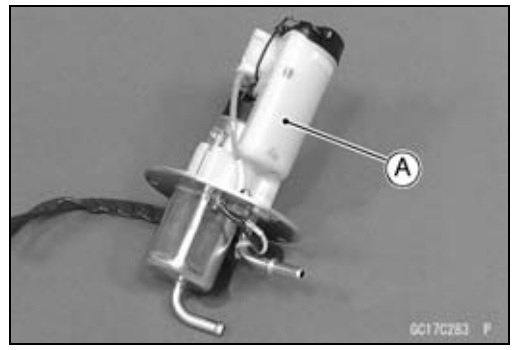

- Check that the fuel pump terminal [A] and band [B] are in place.
  Front [C]
- Apply a non-permanent locking agent to the threads of the fuel pump bolts.
- Tighten the fuel pump bolts to a snug fit, following the tightening sequence as shown in the figure.
- Following the tightening sequence, tighten the fuel pump bolts to the specified torque.

  Torque - Fuel Pump Bolts: 9.8 N·m (1.0 kgf·m, 87 in·lb)
- Tighten the pump bolts again to check the tightness in the order shown.

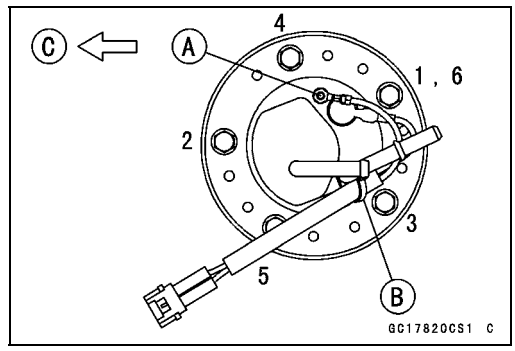

Fuel Pump Operation Inspection

NOTE

○*Be sure the battery is fully charged.*

- Turn the engine stop switch to run position.
- Turn the ignition switch ON and make sure that the fuel pump operates (make light sounds) for 3 seconds, and then stops.
- Turn the ignition switch OFF.

★If the pump does not operate as described above, check the operating voltage (see Fuel Pump Operating Voltage Inspection).

Fuel Pump Operating Voltage Inspection

NOTE

○*Be sure the battery is fully charged.*

- Turn the ignition switch OFF.
- Remove the right side cover (see Side Cover Removal in the Frame chapter).
- Disconnect the fuel pump lead connector and connect the harness adapter [A] between these connectors as shown in the figure.
  Main Harness [B]
  Fuel Pump [C]

Special Tool - Measuring Adapter: 57001-1700

- Connect a digital meter [D] to the harness adapter leads.

Fuel Pump Operating Voltage
Connections to Adapter:
Digital Meter (+) → R (pump Y/R) lead
Digital Meter (–) → BK (pump BK/W) lead

- Measure the operating voltage with engine stopped and with the connector joined.
- Turn the engine stop switch run position.
- Turn the ignition switch ON.

Operating Voltage
Standard: Battery Voltage for 3 seconds, and then 0 V

- Turn the ignition switch OFF.

★If the reading stays on battery voltage and never shows 0 V, check the fuel pump relay (see Relay Circuit Inspection in the Electrical System chapter).
★If the pump relay is normal, check the ECU for its ground and power supply (see ECU Power Supply Inspection).
★If the ground and power supply are good, replace the ECU (see ECU Removal/Installation).
★If there is still no battery voltage, check the ECU main relay and fuel pump relay (see Relay Circuit Inspection in the Electrical System chapter).
★If the main relay and pump relay are normal, check the wiring for continuity (see wiring diagram in this section).
★If the wiring is good, check the ECU for its ground and power supply (see ECU Power Supply Inspection).
★If the ground and power supply are good, replace the ECU (see ECU Removal/Installation).
★If the reading is in specification, but the pump does not operate, replace the fuel pump (see Fuel Pump Removal/Installation).

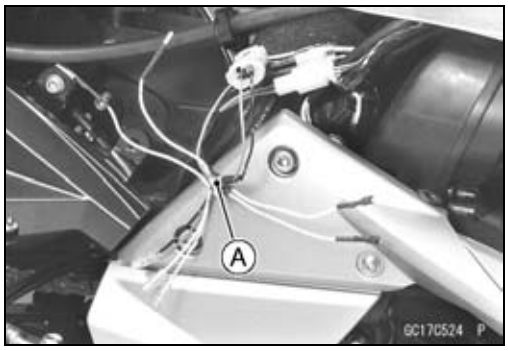

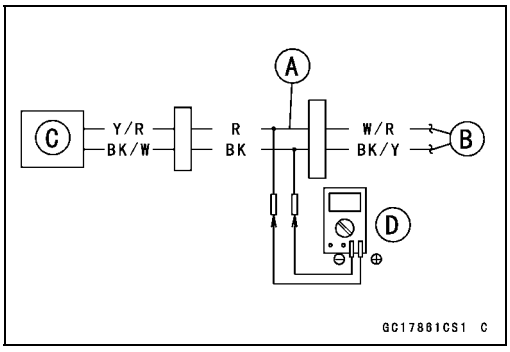

Fuel Pump

Pressure Regulator Removal

○The pressure regulator [A] is built into the fuel pump [B] and can not be removed.

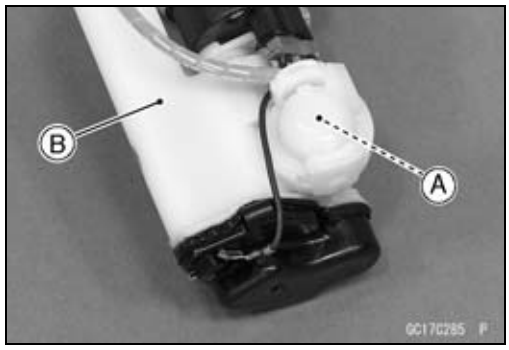

Pump Screen, Fuel Filter Cleaning

○The pump screen [A] and fuel filter [B] are built into the pump and can not be cleaned or checked.

★If the pump screen or fuel filter is suspected of clogging or being damaged, replace it with the fuel pump as a set.

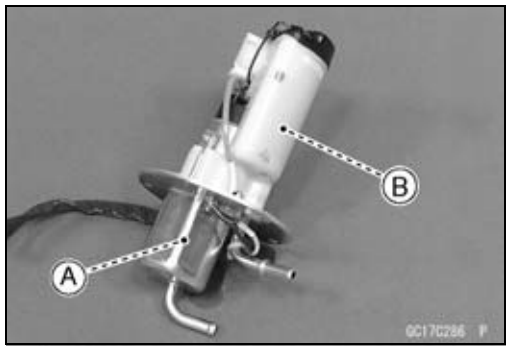

Fuel Pump Relay Removal/Installation

○The fuel pump relay is built in the relay box [A].

- Refer to the Relay Box Removal in the Electrical System chapter.

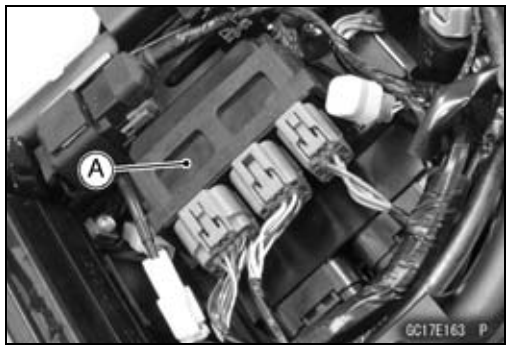

Fuel Pump Relay Inspection

- Refer to the Relay Circuit Inspection in the Electrical System chapter.

Fuel Pump

Fuel Pump Circuit

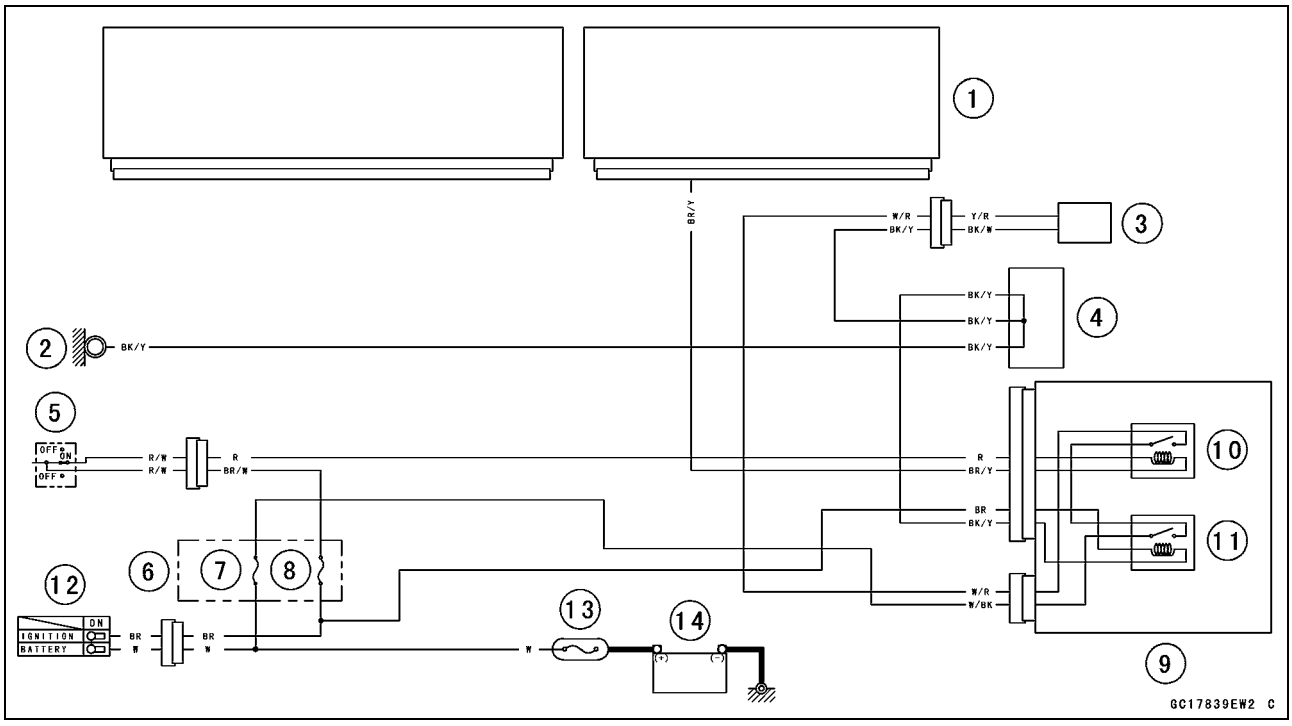

1. ECU
2. Frame Ground
3. Fuel Pump
4. Water-proof Joint B
5. Engine Stop Switch
6. Fuse Box 2
7. ECU Fuse 10 A
8. Ignition Fuse 10 A
9. Relay Box
10. Fuel Pump Relay
11. ECU Main Relay
12. Ignition Switch
13. Main Fuse 30 A
14. Battery 12 V 8 Ah

Fuel Injectors

Fuel Injector Removal/Installation

● Refer to the Throttle Body Assy Disassembly/Assembly.

Fuel Injector Audible Inspection

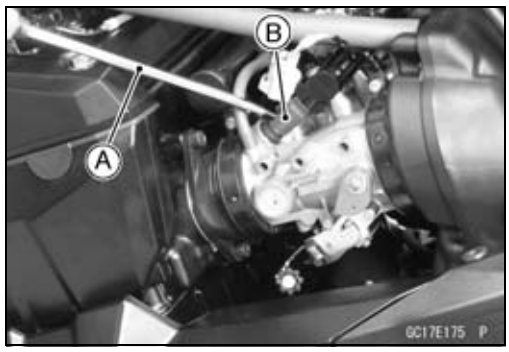

NOTE

○*Be sure the battery is fully charged.*

● Start the engine, and let it idle.
● Apply the tip of a screwdriver [A] to the fuel injector [B]. Put the grip end onto your ear, and listen whether the fuel injector is clicking or not.
○A sound scope can also be used.
○The click interval becomes shorter as the engine speed rises.
● Do the same for the other fuel injectors.
★If all the fuel injectors click at a regular intervals, the fuel injectors are normal.
● Turn the ignition switch OFF.
★If any fuel injector does not click, check the fuel injector resistance (see Fuel Injector Resistance Inspection).

Fuel Injector Resistance Inspection

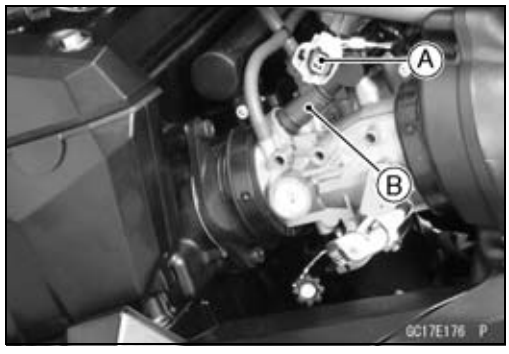

● Remove:
  Fuel Tank (see Fuel Tank Removal)
  Fuel Outlet Hose (see Fuel Hose Replacement in the Periodic Maintenance chapter)
● Disconnect the injector connector [A].
● Connect a digital meter to the terminals of the injector [B].
● Measure the fuel injector resistance.

Fuel Injector Resistance
Connections:
For Fuel Injector #1
W/R ←→ BL/R terminal
For Fuel Injector #2
W/R ←→ BL/G terminal
For Fuel Injector #3
W/R ←→ BL/BK terminal
For Fuel Injector #4
W/R ←→ BL/Y terminal

Standard: About 11.7 ~ 12.3 Ω at 20°C (68°F)

★If the reading is out of the standard, replace the injector.
★If the reading is within the standard, check the power source voltage (see Fuel Injector Power Source Voltage Inspection).

Fuel Injectors

Fuel Injector Power Source Voltage Inspection

NOTE

○*Be sure the battery is fully charged.*

- Turn the ignition switch OFF.
- Disconnect the injector connector and connect the harness adapter [A] between these connectors as shown in the figure.
  Main Harness [B]
  Fuel Injector #1 [C]

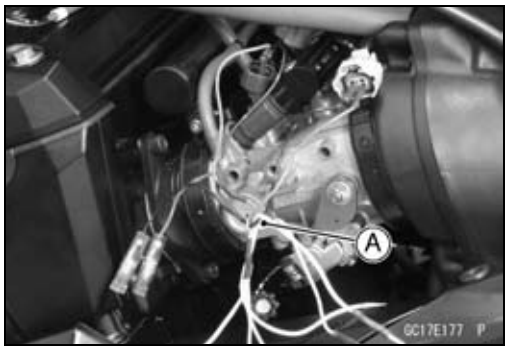

Special Tool - Measuring Adapter: 57001-1700

- Connect a digital meter [D] to the harness adapter leads.

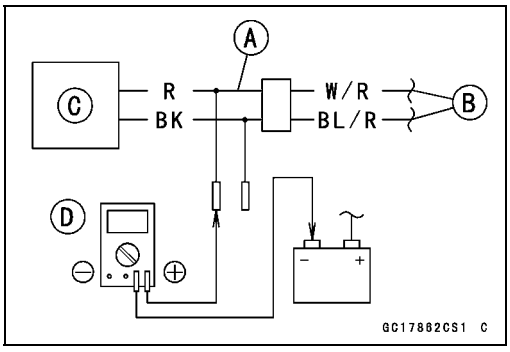

Fuel Injector Power Source Voltage
Connections to Adapter:
For Fuel Injector #1, #2, #3, #4
Digital Meter (+) → R (injector W/R) lead
Digital Meter (–) → Battery (–) terminal

- Measure the power source voltage with the engine stopped.
- Turn the engine stop switch to run position.
- Turn the ignition switch ON.

Power Source Voltage
Standard: Battery Voltage for 3 seconds, and then 0 V

- Turn the ignition switch OFF.

★If the reading stays on battery voltage and never shows 0 V, check the fuel pump relay (see Relay Circuit Inspection in the Electrical System chapter).
★If the pump relay is normal, check the ECU for its ground and power supply (see ECU Power Supply Inspection).
★If the ground and power supply are good, replace the ECU (see ECU Removal/Installation).
★If there is still no battery voltage, check the ECU main relay and fuel pump relay (see Relay Circuit Inspection in the Electrical System chapter).
★If the main relay and pump relay are normal, check the power source wiring (see wiring diagram in this section).
★If the wiring is good, check the ECU for its ground and power supply (see ECU Power Supply Inspection).
★If the ground and power supply are good, replace the ECU (see ECU Removal/Installation).
★If the reading is in specification, check the output voltage (see Fuel Injector Output Voltage Inspection).

Fuel Injectors

Fuel Injector Output Voltage Inspection

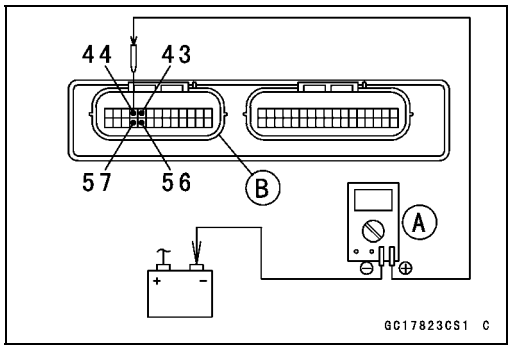

NOTE

○*Be sure the battery is fully charged.*

- Turn the ignition switch OFF.
- Remove the ECU (see ECU Removal).

○Do not disconnect the ECU connector.

- Connect a digital meter [A] to the connector [B] with the needle adapter set.

Special Tool - Needle Adapter Set: 57001-1457

Fuel Injector Output Voltage
Connections to ECU Connector:

For Fuel Injector #1

Digital Meter (+) → BL/R lead (ECU terminal 44)

Digital Meter (–) → Battery (–) terminal

For Fuel Injector #2

Digital Meter (+) → BL/G lead (ECU terminal 43)

Digital Meter (–) → Battery (–) terminal

For Fuel Injector #3

Digital Meter (+) → BL/BK lead (ECU terminal 57)

Digital Meter (–) → Battery (–) terminal

For Fuel Injector #4

Digital Meter (+) → BL/Y lead (ECU terminal 56)

Digital Meter (–) → Battery (–) terminal

- Measure the output voltage with the engine stopped and with the connector joined.
- Turn the engine stop switch to run position.
- Turn the ignition switch ON.

Output Voltage
Standard: Battery Voltage for 3 seconds, and then 0 V

- Turn the ignition switch OFF.

★If the reading is in specification, check the ECU for its ground and power supply (see ECU Power Supply Inspection).

★If the ground and power supply are good, replace the ECU (see ECU Removal/Installation).

Fuel Injectors

★If the reading is out of the specification, remove the ECU and check the wiring for continuity between main harness connectors.

○Disconnect the ECU and injector connectors.

Wiring Inspection

ECU Connector [A] ←→ Fuel Injector Connector [B]

For Fuel Injector #1 [C]

BL/R lead (ECU terminal 44) [D]

For Fuel Injector #2

BL/G lead (ECU terminal 43)

For Fuel Injector #3

BL/BK lead (ECU terminal 57)

For Fuel Injector #4

BL/Y lead (ECU terminal 56)

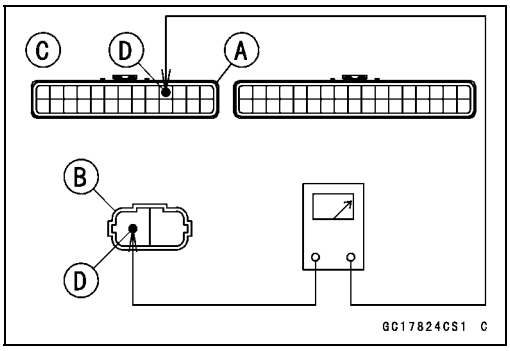

★If the wiring is good, check the ECU for its ground and power supply (see ECU Power Supply Inspection).

★If the ground and power supply are good, replace the ECU (see ECU Removal/Installation).

Fuel Injector Fuel Line Inspection

● Remove:

Fuel Tank (see Fuel Tank Removal)

Fuel Outlet Hose (see Fuel Hose Replacement in the Periodic Maintenance chapter)

○Be sure to place a piece of cloth around the fuel outlet pipe of the fuel pump and the delivery pipe of the throttle body assy.

⚠ WARNING

Fuel is flammable and explosive under certain conditions and can cause severe burns. Be prepared for fuel spillage; any spilled fuel must be completely wiped up immediately. When the fuel hose is disconnected, fuel spills out from the hose and the pipe because of residual pressure. Cover the hose connection with a piece of clean cloth to prevent fuel spillage.

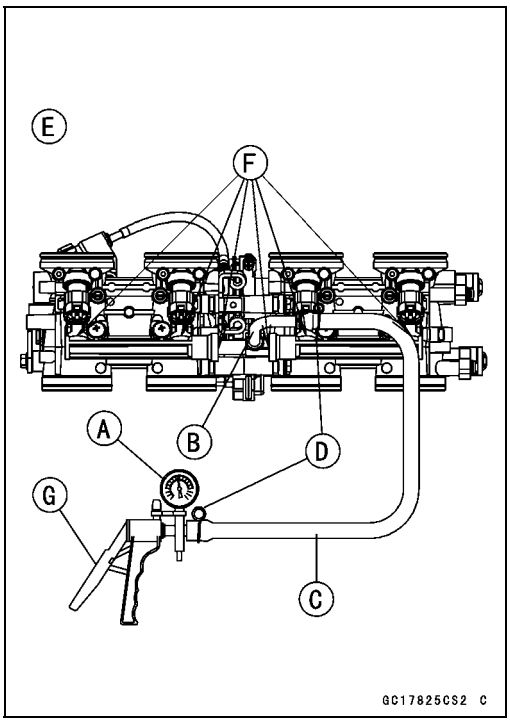

● Check the injector fuel line for leakage as follows.

○Connect a commercially available vacuum/pressure pump [A] to the nipple of the delivery pipe [B] with the fuel hose [C] (both ends with the clamps [D]) as shown in the figure.

Upside View [E]

○Apply soap and water solution to the areas [F] as shown in the figure.

○Watching the pressure gauge, squeeze the pump lever [G], and build up the pressure until the pressure reaches the maximum pressure.

Injector Fuel Line Maximum Pressure

Standard: 300 kPa (3.06 kgf/cm², 43 psi)

NOTICE

During pressure testing, do not exceed the maximum pressure for which the system is designed.

Fuel Injectors

○Watch the gauge for at least 6 seconds.
★If the pressure holds steady, the fuel line is good.
★If the pressure drops at once or if bubbles are found in the area, the fuel line is leaking. Replace the delivery pipe assy, injectors and related parts.
○Repeat the leak test, and check the fuel line for no leakage.
● Install:
Fuel Outlet Hose (see Fuel Hose Replacement in the Periodic Maintenance chapter)
Fuel Tank (see Fuel Tank Installation)
● Start the engine and check for fuel leakage.

Fuel Injector Circuit

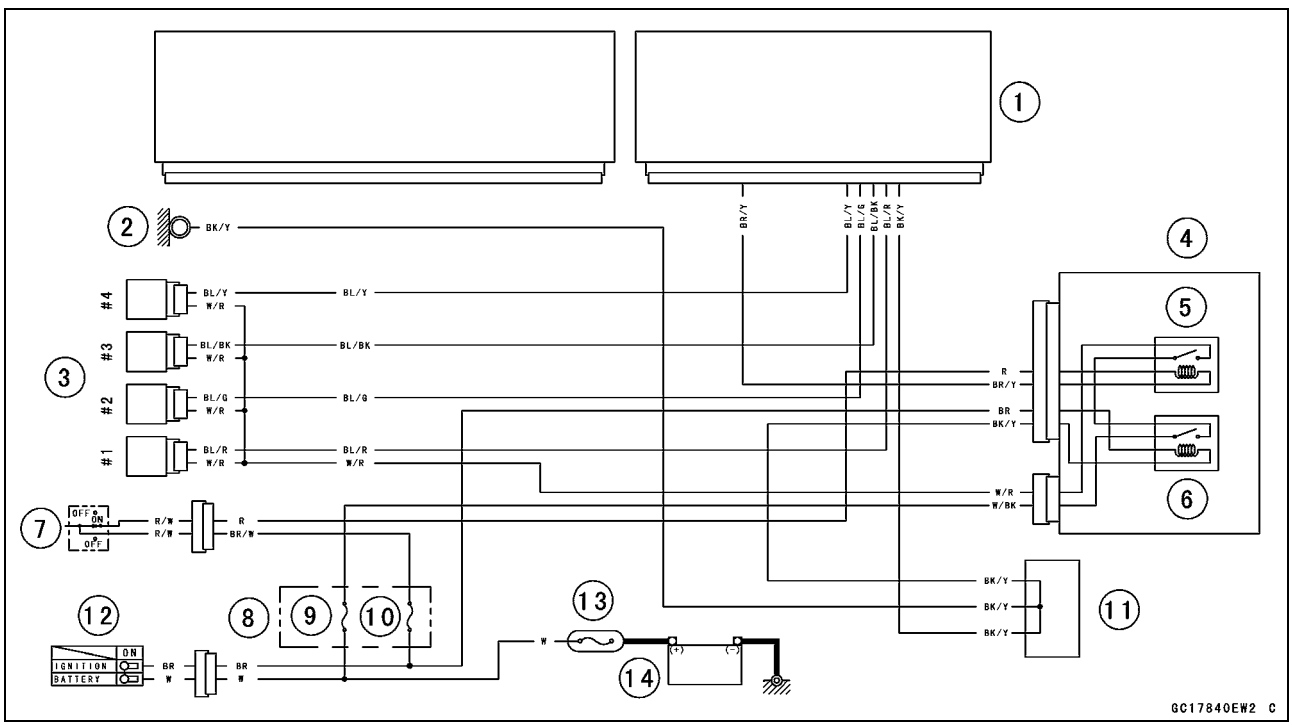

1. ECU
2. Frame Ground
3. Fuel Injector #1, #2, #3, #4
4. Relay Box
5. Fuel Pump Relay
6. ECU Main Relay
7. Engine Stop Switch
8. Fuse Box 2
9. ECU Fuse 10 A
10. Ignition Fuse 10 A
11. Water-proof Joint B
12. Ignition Switch
13. Main Fuse 30 A
14. Battery 12 V 8 Ah

Throttle Grip and Cables

Free Play Inspection

- Refer to the Throttle Control System Inspection in the Periodic Maintenance chapter.

Free Play Adjustment

- Refer to the Throttle Control System Inspection in the Periodic Maintenance chapter.

Cable Installation

- Install the throttle cables in accordance with the Cable, Wire, and Hose Routing section in the Appendix chapter.
- Install the lower ends of the throttle cables in the throttle pulley on the throttle body assy after installing the upper ends of the throttle cables in the grip.
- After installation, adjust each cable properly (see Throttle Control System Inspection in the Periodic Maintenance chapter).

⚠ WARNING

Operation with incorrectly routed or improperly adjusted cables could result in an unsafe riding condition. Be sure the cables are routed correctly and properly adjusted.

Cable Lubrication

- Refer to the Chassis Parts Lubrication in the Periodic Maintenance chapter.

Throttle Body Assy

Idle Speed Inspection/Adjustment

- Refer to the Idle Speed Inspection/Adjustment in the Periodic Maintenance chapter.

Synchronization Inspection/Adjustment

- Refer to the Engine Vacuum Synchronization Inspection in the Periodic Maintenance chapter.

Throttle Body Assy Removal

⚠ WARNING

Gasoline is extremely flammable and can be explosive under certain conditions, creating the potential for serious burns. Make sure the area is well-ventilated and free from any source of flame or sparks; this includes any appliance with a pilot light. Do not smoke. Turn the ignition switch OFF. Be prepared for fuel spillage; any spilled fuel must be completely wiped up immediately.

NOTICE

Never drop the throttle body assy especially on a hard surface. Such a shock to the body assy can damage it.

- Remove:
  Fuel Tank (see Fuel Tank Removal)
  Air Switching Valve Hose [A]
  Vacuum Hose [B]

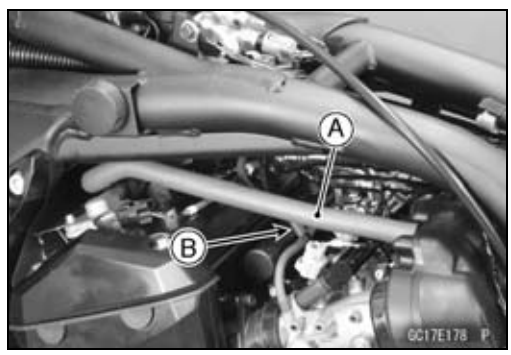

- Disconnect:
  Fuel Injector Connectors [A]
  Subthrottle Valve Actuator Harness Connector [B]
- Open the clamp [C].

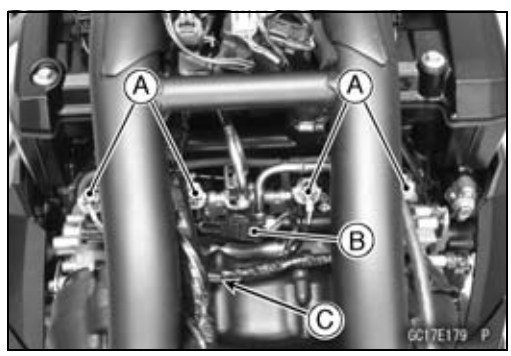

Throttle Body Assy

- Disconnect:
  Main Throttle Sensor Connector [A]
  Subthrottle Sensor Connector [B]
- Open the clamp [C].

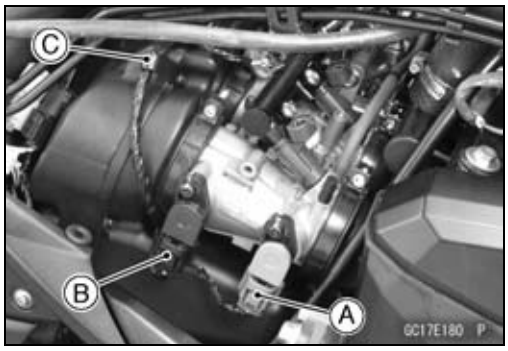

- For ABS equipped models, remove the bolt [A] and bracket [B].

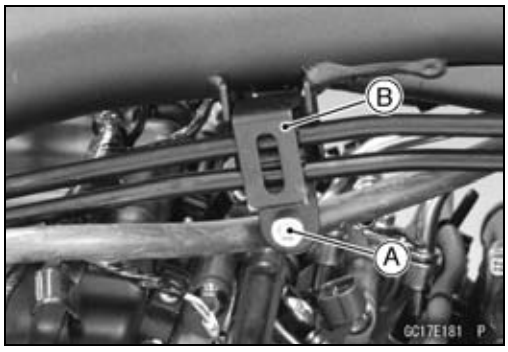

- Remove:
  Air Cleaner Duct (see Air Cleaner Element Replacement in the Periodic Maintenance chapter)
  Intake Air Temperature Sensor (see Intake Air Temperature Sensor Removal)
  Right Air Cleaner Housing Mounting Bolt [A]

○Do not disconnect the intake air temperature sensor connector.

- Remove:
  Exhaust Butterfly Valve Actuator Mounting Bolts (see Exhaust Butterfly Valve Actuator Removal)
  Left Air Cleaner Housing Mounting Bolt [A]

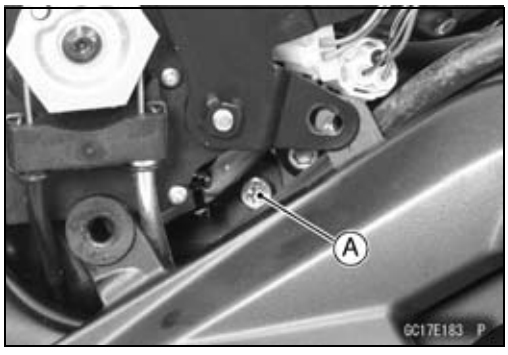

- Remove:
  Right Frame Cover (see Frame Cover Removal in the Frame chapter)
  Bolt [A]
- Pull the oxygen sensor lead connector, crankshaft sensor lead connector and bracket downward.

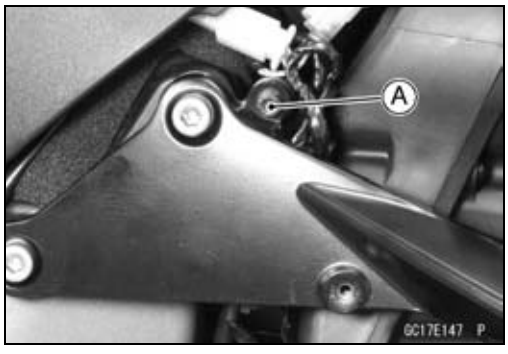

Throttle Body Assy

- Remove the left frame cover (see Frame Cover Removal in the Frame chapter).
- Open the clamp [A] and pull the alternator lead connector [B] downward.

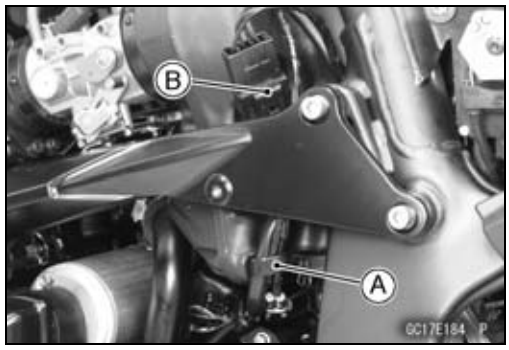

- Remove the left subframe (see Engine Removal in the Engine Removal/Installation chapter).
- Loosen the air duct clamp bolts [A].
- Move [B] the air cleaner housing [C] backward, and pull out the air ducts from the throttle body assy.

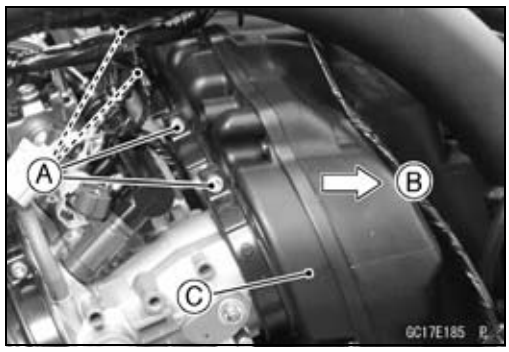

- Remove:
  Throttle Case Screws [A]
  Upper Throttle Case [B]

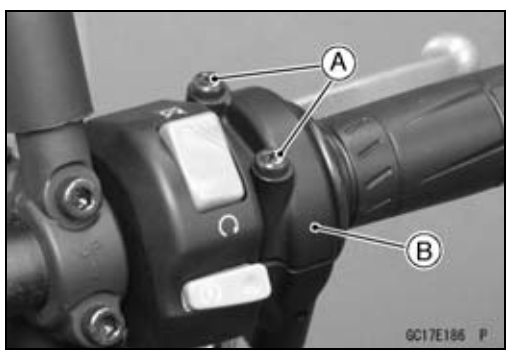

- Remove:
  Throttle Cable Upper Ends [A]
  Lower Throttle Case (with Throttle Cable) [B]

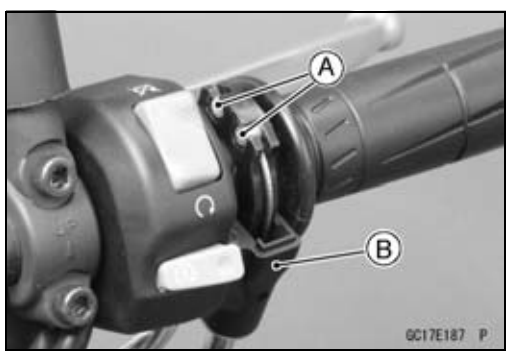

- Turn the lever [A] fully clockwise [B], and close the sub-throttle valves [C] until completely closed position.
- Loosen the throttle body assy holder clamp bolts (#1 ~ #4) [D], and pull out the throttle body assy [E] backward.

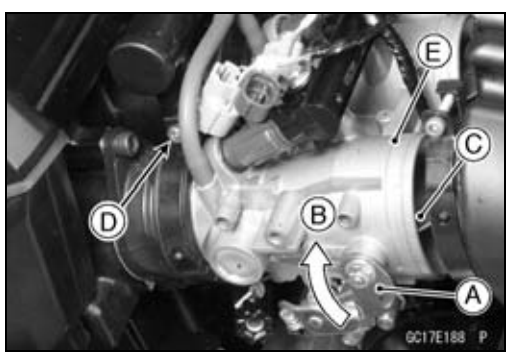

Throttle Body Assy

- Remove the throttle body assy [A] to left side of motorcycle.
- After removing the throttle body assy, stuff pieces of lint-free, clean cloth into the throttle body assy holders.

NOTICE
If dirt gets into the engine, excessive engine wear and possible engine damage will occur.

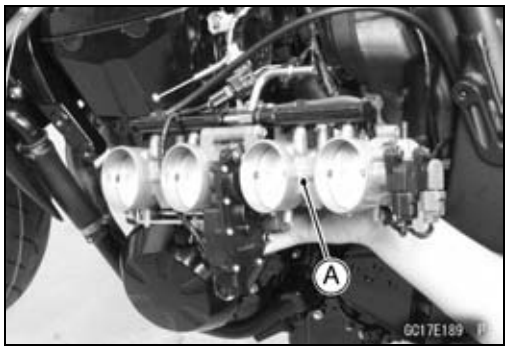

- Remove the bolt [A] and the throttle cable plate [B] from the throttle body assy.

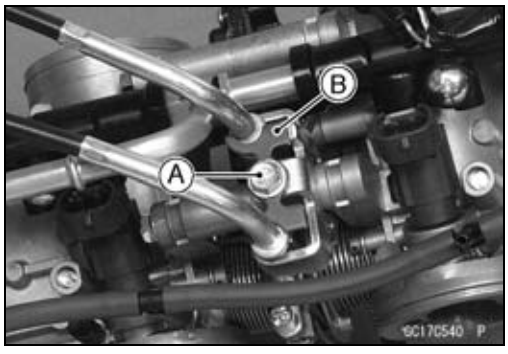

- Remove the throttle cable lower ends [A] from the throttle pulley.

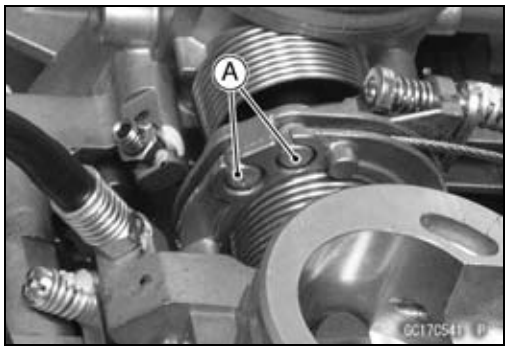

Throttle Body Assy Installation

- Turn the lever [A] fully clockwise, and close the subthrottle valves [B] until completely closed position.

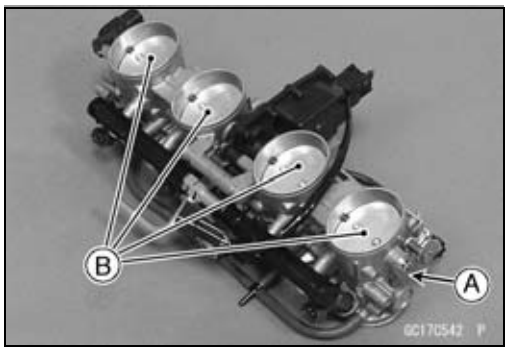

- Apply a thin coating of grease to the throttle cable lower ends.
- Fit the accelerator cable end [A] and the decelerator cable end [B] into the throttle pulley.
- Tighten:

  Torque - Throttle Cable Plate Bolt: 5.9 N·m (0.60 kgf·m, 52 in·lb)

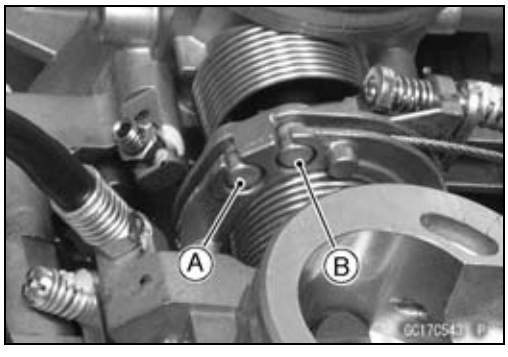

Throttle Body Assy

- Install the throttle body assy holder clamp bolts in the direction as shown.
  Bolt Heads [A]
- Fit the projections [B] of the holder into the holes in the clamps.
- Install the throttle body assy to the throttle body assy holders.

○Apply a small amount of 2-stroke oil to the throttle body assy holder for easy installation.

- Tighten:

Torque - Throttle Body Assy Holder Clamp Bolts: 2.0 N·m (0.20 kgf·m, 18 in·lb)

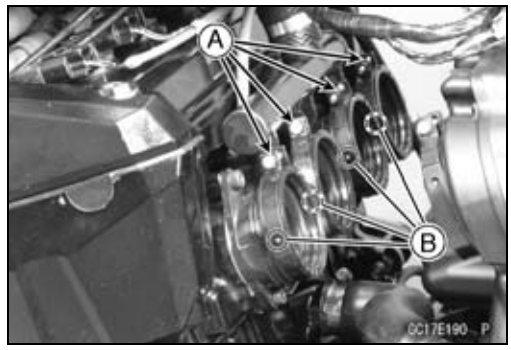

- Install the air duct clamp bolts in the direction as shown.
  Bolt Heads [A]
- Fit the projections [B] of the holder into the holes in the clamps.

○In this figure, the throttle body assy has been removed for clarity.

- Install the air ducts to the throttle body assy.

○Apply a small amount of 2-stroke oil to the throttle body assy holder for easy installation.

- Tighten:

Torque - Air Duct Clamp Bolts: 2.0 N·m (0.20 kgf·m, 18 in·lb)
Air Cleaner Housing Mounting Bolts: 9.8 N·m (1.0 kgf·m, 87 in·lb)

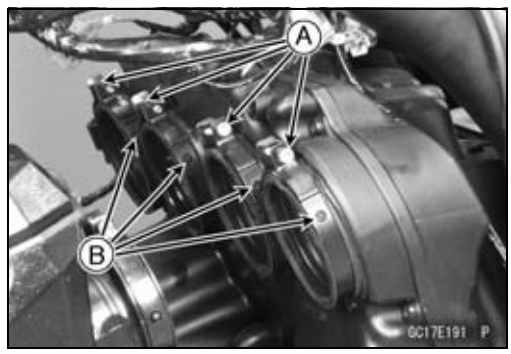

- Fit the projection [A] of the lower throttle case into the hole [B] of the handlebar.
- Apply a thin coating of grease to the throttle cable upper ends.
- Install the upper ends of the throttle cables in the grip.

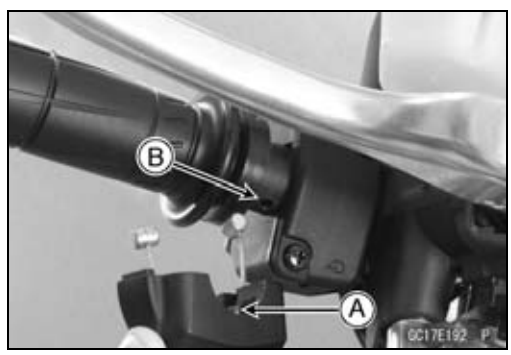

- Install the upper throttle case [A].
- Tighten the throttle case screws [B].

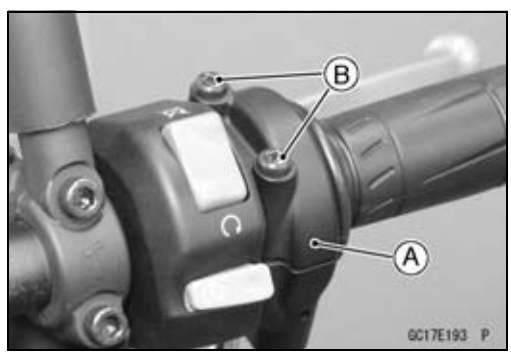

- Turn the throttle grip and make sure that the throttle valves move smoothly and return by spring force.
- Run the leads and hoses correctly (see Cable, Wire, and Hose Routing section in the Appendix chapter).
- Adjust:
  Throttle Grip Free Play (see Throttle Control System Inspection in the Periodic Maintenance chapter)
  Idle Speed (see Idle Speed Adjustment in the Periodic Maintenance chapter)

Throttle Body Assy

Throttle Body Assy Disassembly

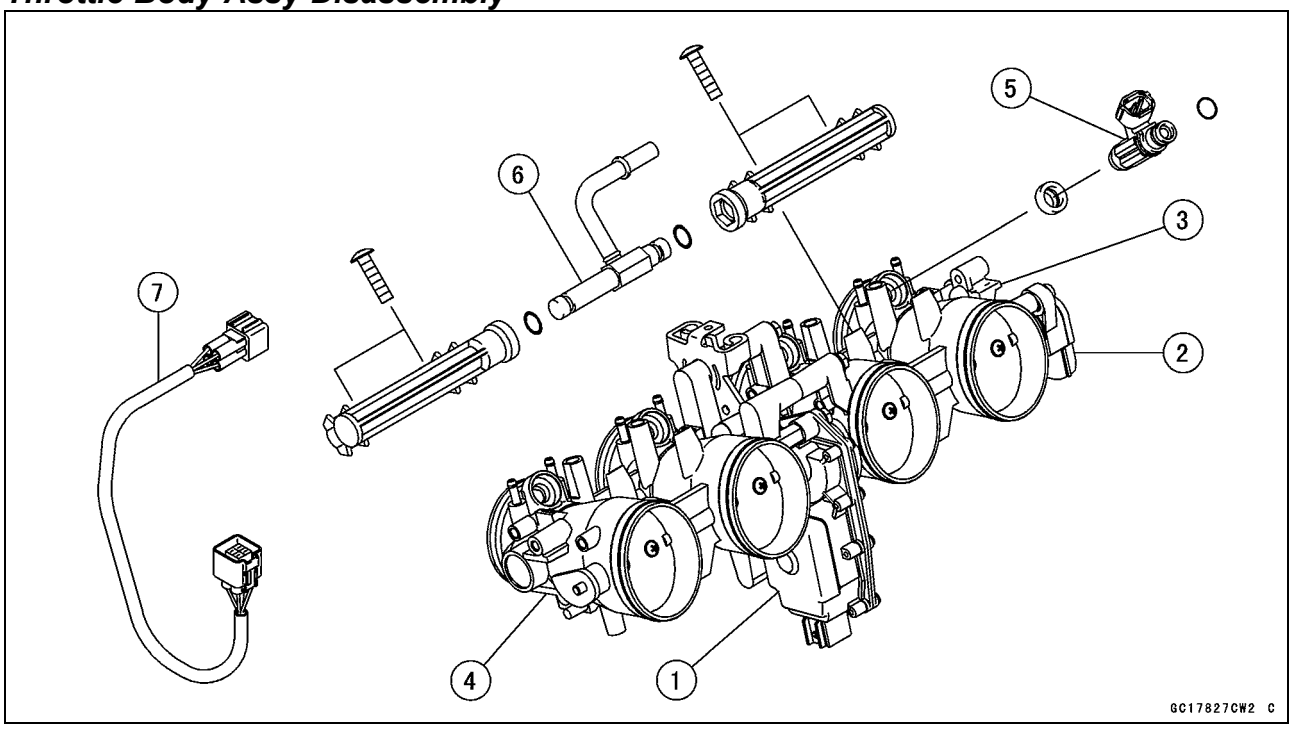

1. Subthrottle Valve Actuator
2. Subthrottle Sensor
3. Main Throttle Sensor
4. Throttle Body Assy
5. Fuel Injectors
6. Delivery Pipe Assy
7. Subthrottle Valve Actuator Connector Harness

NOTICE

Do not remove, disassemble or adjust the main throttle sensor, subthrottle sensor, subthrottle valve actuator, throttle link mechanism and throttle body assy, because they are adjust or set surely at the manufacturer. Adjustment of these parts could result in poor performance, requiring replacement of the throttle body assy.

- Remove the throttle body assy (see Throttle Body Assy Removal).
- Cut the band [A], and disconnect the subthrottle valve actuator connector [B].

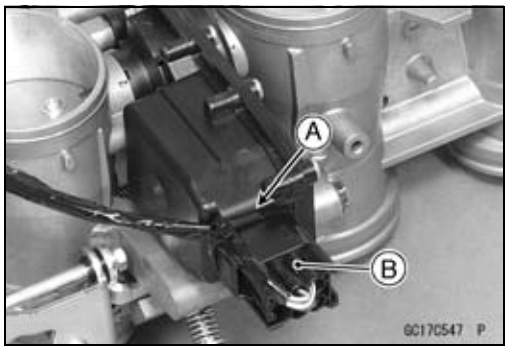

Throttle Body Assy

- Cut the band [A].
- Remove the screws [B] to pull out the injectors from the throttle body assy together with the delivery pipe assy [C].

NOTE

○*Do not damage the insertion portions of the injectors when they are pulled out from the throttle body.*

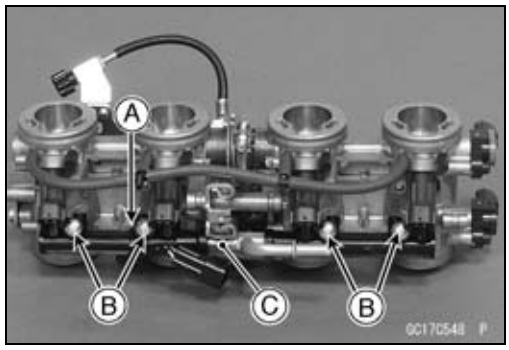

- Pull out the injectors [A] from the delivery pipe assy [B].

NOTE

○*Do not damage the insertion portions of the injectors when they are pulled out from the delivery pipe assy.*

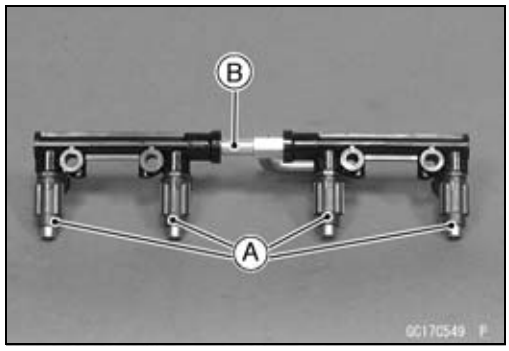

NOTICE

Never drop the fuel injector especially on a hard surface. Such a shock to the injector can damage it.

Throttle Body Assy Assembly

- Before assembling, blow away dirt or dust from the throttle body and delivery pipe by applying compressed air.
- Replace the O-rings [A] of each injector [B] with new ones.
- Apply engine oil to the new O-rings, insert them to the delivery pipe assy [C] and confirm whether the injectors turn smoothly or not.

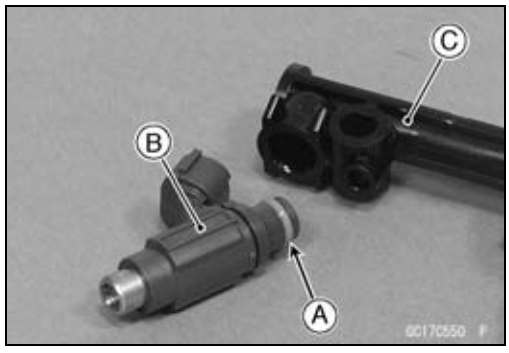

- Replace the dust seals [A] with new ones.
- Apply engine oil to the new dust seals.
- Install the injectors along with the delivery pipe assy to the throttle body.
- Tighten:

  Torque - Delivery Pipe Assy Mounting Screws: 3.4 N·m (0.35 kgf·m, 30 in·lb)

- Connect the subthrottle valve actuator connector, and bind the harness with band.
- Install the throttle body assy (see Throttle Body Assy Installation).

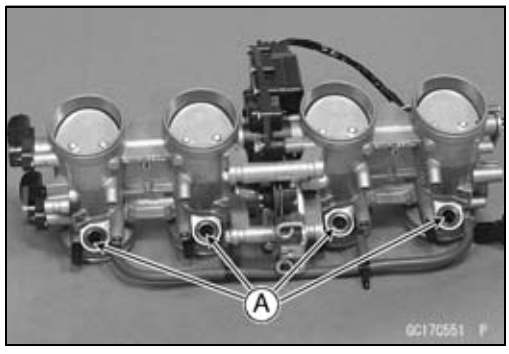

Air Cleaner

Air Cleaner Element Removal/Installation

- Refer to the Air Cleaner Element Replacement in the Periodic Maintenance chapter.

Air Cleaner Element Inspection

- Remove the air cleaner element (see Air Cleaner Element Replacement in the Periodic Maintenance chapter).
- Visually check the element [A] for tears or breaks.

★If the element has any tears or breaks, replace the element.

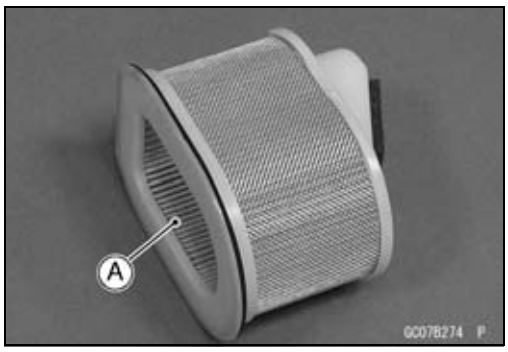

Air Cleaner Oil Draining

A drain hose is connected to the bottom of the air cleaner to drain water or oil accumulated in the cleaner part.

- Visually check the drain hose [A] if the water or oil accumulates.

★If any water or oil accumulates in the hose, remove the plug [B] from the drain hose and drain it.

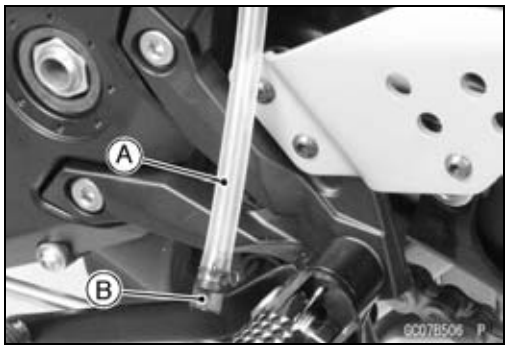

⚠ WARNING

Oil on tires will make them slippery and can cause an accident and injury. Be sure to reinstall the plug in the drain hose after draining.

Air Cleaner Housing Removal

- Remove:
  Engine (see Engine Removal in the Engine Removal/Installation chapter)
  Air Cleaner Element (see Air Cleaner Element Replacement in the Periodic Maintenance chapter)
  Air Cleaner Drain Hose [A]
- Pull [B] the air cleaner housing [C] forward, and remove it from the frame.

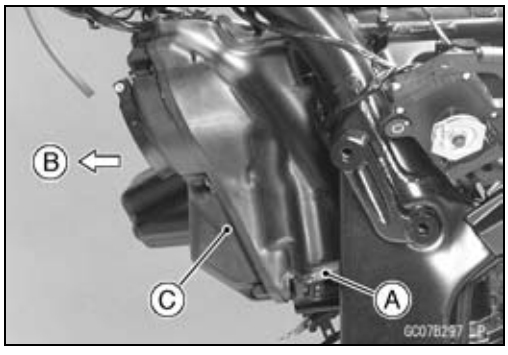

Fuel Tank

Fuel Tank Removal

⚠ WARNING

Gasoline is extremely flammable and can be explosive under certain conditions, creating the potential for serious burns. Make sure the area is well-ventilated and free from any source of flame or sparks; this includes any appliance with a pilot light. Do not smoke. Turn the ignition switch OFF. Disconnect the battery (–) terminal. To avoid fuel spills, draw it from the tank when the engine is cold. Be prepared for fuel spillage; any spilled fuel must be completely wiped up immediately.

- Turn the ignition switch OFF.
- Wait until the engine cools down.
- Disconnect the battery (–) terminal (see Battery Removal in the Electrical System chapter).
- Remove:
  Side Covers (see Side Cover Removal in the Frame chapter)
  Fuel Tank Bolt [A]

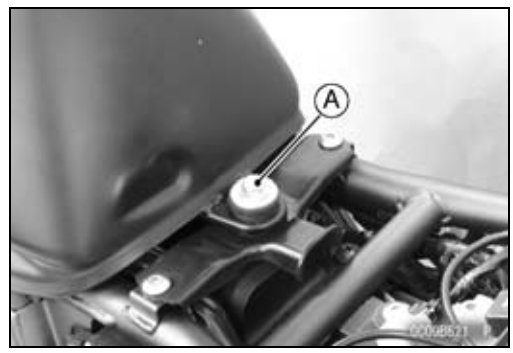

- Open the fuel tank cap [A] to lower the pressure in the tank.

○During tank removal, keep the tank cap open to release pressure in the tank. This makes fuel spillage less.

- Draw the fuel out from the fuel tank with a commercially available pump [A].

○Use a soft plastic hose [B] as a pump intake hose in order to insert the hose smoothly.

○Put the hose through the fill opening [C] into the tank and draw the fuel out.
  Front [D]

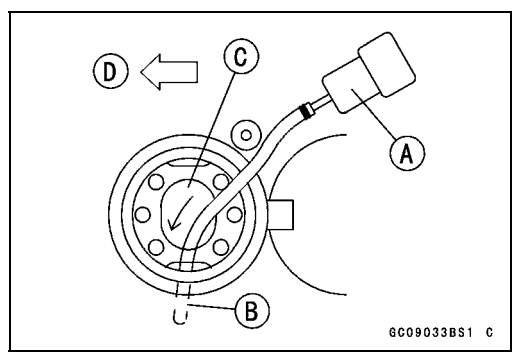

⚠ WARNING

Spilled fuel is flammable and can be explosive under certain conditions. The fuel can not be removed completely from the fuel tank. Be careful for remained fuel spillage.

Fuel Tank

- Disconnect:
  Fuel Pump Lead Connector [A]
  Fuel Level Sensor Lead Connector [B]

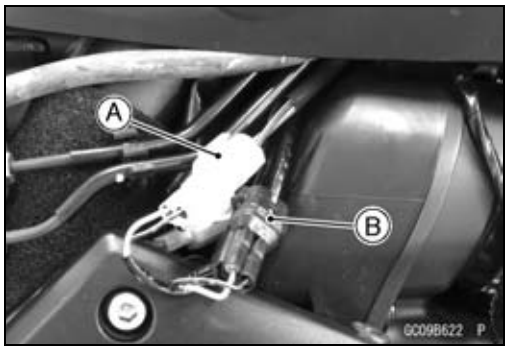

- Be sure to place a piece of cloth [A] around the fuel outlet hose joint [B].
- Push the joint lock claws [C].

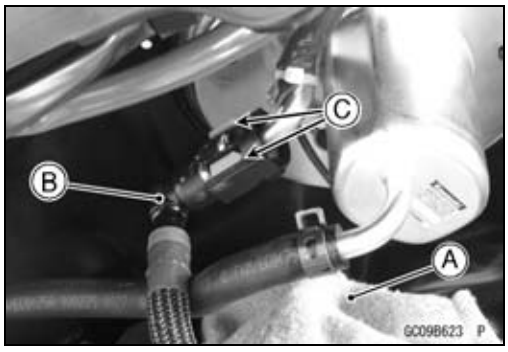

- Pull the joint lock [A] as shown in the figure.
- Pull [B] the fuel outlet hose joint [C] out of the fuel outlet pipe.

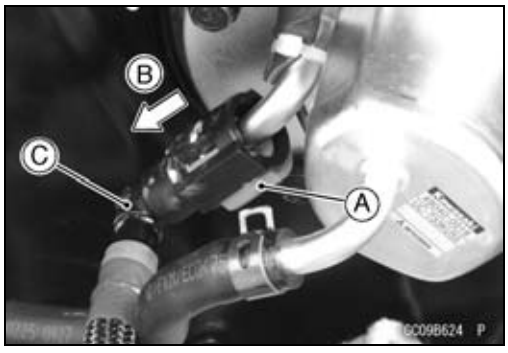

⚠ WARNING

Fuel is flammable and explosive under certain conditions and can cause severe burns. Be prepared for fuel spillage; any spilled fuel must be completely wiped up immediately. When the fuel hose is disconnected, fuel spills out from the hose and the pipe because of residual pressure. Cover the hose connection with a piece of clean cloth to prevent fuel spillage.

- Close the fuel tank cap.
- Remove the fuel tank, and place a it on a flat surface.

○Do not apply the load to the fuel intake pipe of the fuel pump.

Fuel Tank

Fuel Tank Installation

- Note the above WARNING (see Fuel Tank Removal).
- Run the hoses correctly (see Cable, Wire, and Hose Routing section in the Appendix chapter).
- Check that the dampers [A] are in place on the frame and the fuel tank.

★If the dampers are damaged or deteriorated, replace them.

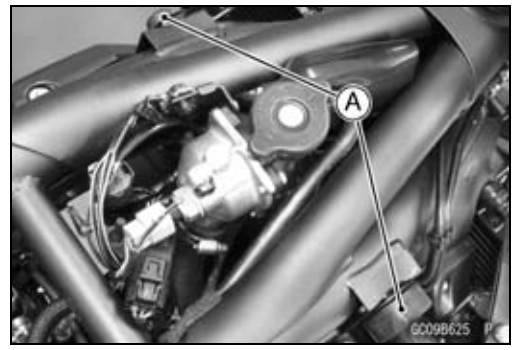

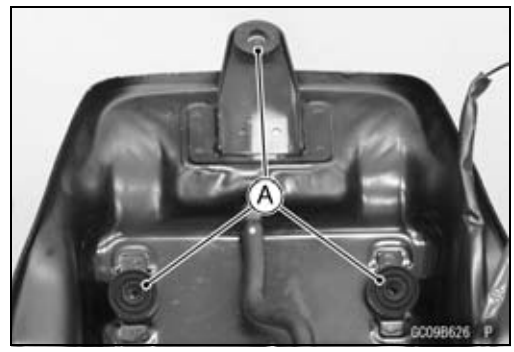

- Pull the joint lock [A] as shown in the figure.

- Insert the fuel outlet hose joint [A] straight onto the fuel outlet pipe until the hose joint clicks.
- Push the joint lock [B] until the hose joint clicks.

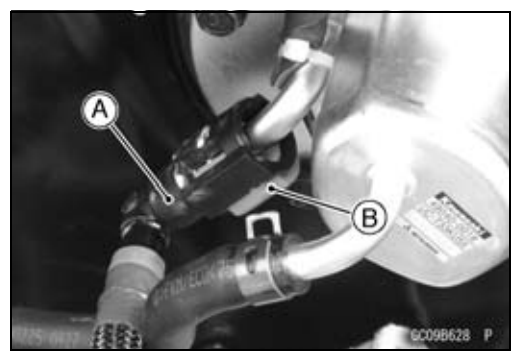

- Push and pull [A] the hose joint [B] back and forth more than two times, and make sure it is locked and does not come off.

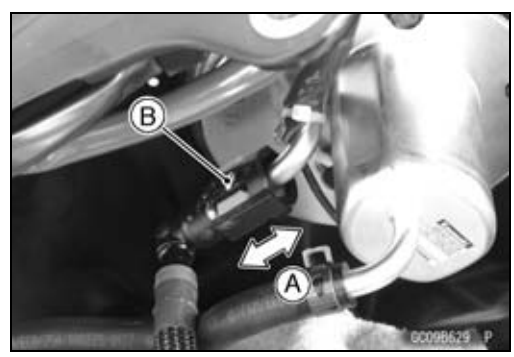

⚠ WARNING

Leaking fuel can cause a fire or explosion resulting in severe burns. Make sure the fuel hose joint is installed correctly on the delivery pipe and that it doesn't leak.

★If it comes off, reinstall the hose joint.

- Connect the fuel pump, fuel level sensor lead connectors and the battery (–) terminal (see Battery Installation in the Electrical System chapter).

Fuel Tank

Fuel Tank and Cap Inspection

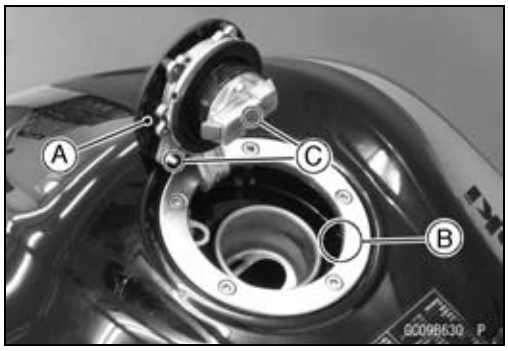

- Open the tank cap.
- Visually inspect the gasket [A] on the tank cap for any damage.

★Replace the gasket if it is damaged.

- Check to see if the water drain pipe [B] in the tank are not clogged. Check the tank cap breather also.

★If they are clogged, remove the tank and drain it, and then blow the breather free with compressed air.

NOTICE

Do not apply compressed air to the air vent holes [C] in the tank cap. This could cause damage and clogging of the labyrinth in the cap.

Fuel Tank Cleaning

⚠ WARNING

Gasoline and low-flash point solvents can be flammable and/or explosive and cause severe burns. Clean the tank in a well-ventilated area, and take care that there are no sparks or flame anywhere near the working area. Do not use gasoline or low-flash point solvents to clean the tank.

- Remove:
  Fuel Tank (see Fuel Tank Removal)
  Fuel Intake Hose (see Fuel Hose Replacement in the Periodic Maintenance chapter)
  Fuel Pump (see Fuel Pump Removal)
- Pour some high-flash point solvent into the fuel tank and shake the tank to remove dirt and fuel deposits.
- Draw the solvent out of the fuel tank.
- Dry the tank with compressed air.
- Install:
  Fuel Pump (see Fuel Pump Installation)
  Fuel Intake Hose (see Fuel Hose Replacement in the Periodic Maintenance chapter)
  Fuel Tank (see Fuel Tank Installation)

Cooling System

Table of Contents

Exploded View 4-2
Coolant Flow Chart 4-4
Specifications 4-6
Special Tools 4-7
Coolant 4-8
- Coolant Deterioration Inspection 4-8
- Coolant Level Inspection 4-8
- Coolant Draining 4-8
- Coolant Filling 4-8
- Pressure Testing 4-8
- Cooling System Flushing 4-9
- Coolant Reserve Tank Removal/Installation 4-9

Water Pump 4-10
- Water Pump Removal 4-10
- Water Pump Installation 4-10
- Water Pump Inspection 4-10
- Water Pump Impeller Disassembly/Assembly 4-10
- Water Pump Impeller Inspection 4-10
- Water Pump Housing Disassembly 4-10
- Water Pump Housing Assembly 4-11
- Mechanical Seal Inspection 4-11

Radiator 4-12
- Radiator and Radiator Fan Removal 4-12
- Radiator and Radiator Fan Installation 4-13
- Radiator Inspection 4-13
- Radiator Cap Inspection 4-14
- Radiator Filler Neck Inspection 4-14

Thermostat 4-15
- Thermostat Removal 4-15
- Thermostat Installation 4-15
- Thermostat Inspection 4-16

Hose and Pipes 4-17
- Hose Installation 4-17
- Hose Inspection 4-17

Water Temperature Sensor 4-18
- Water Temperature Sensor Removal/Installation 4-18
- Water Temperature Sensor Inspection 4-18

Exploded View

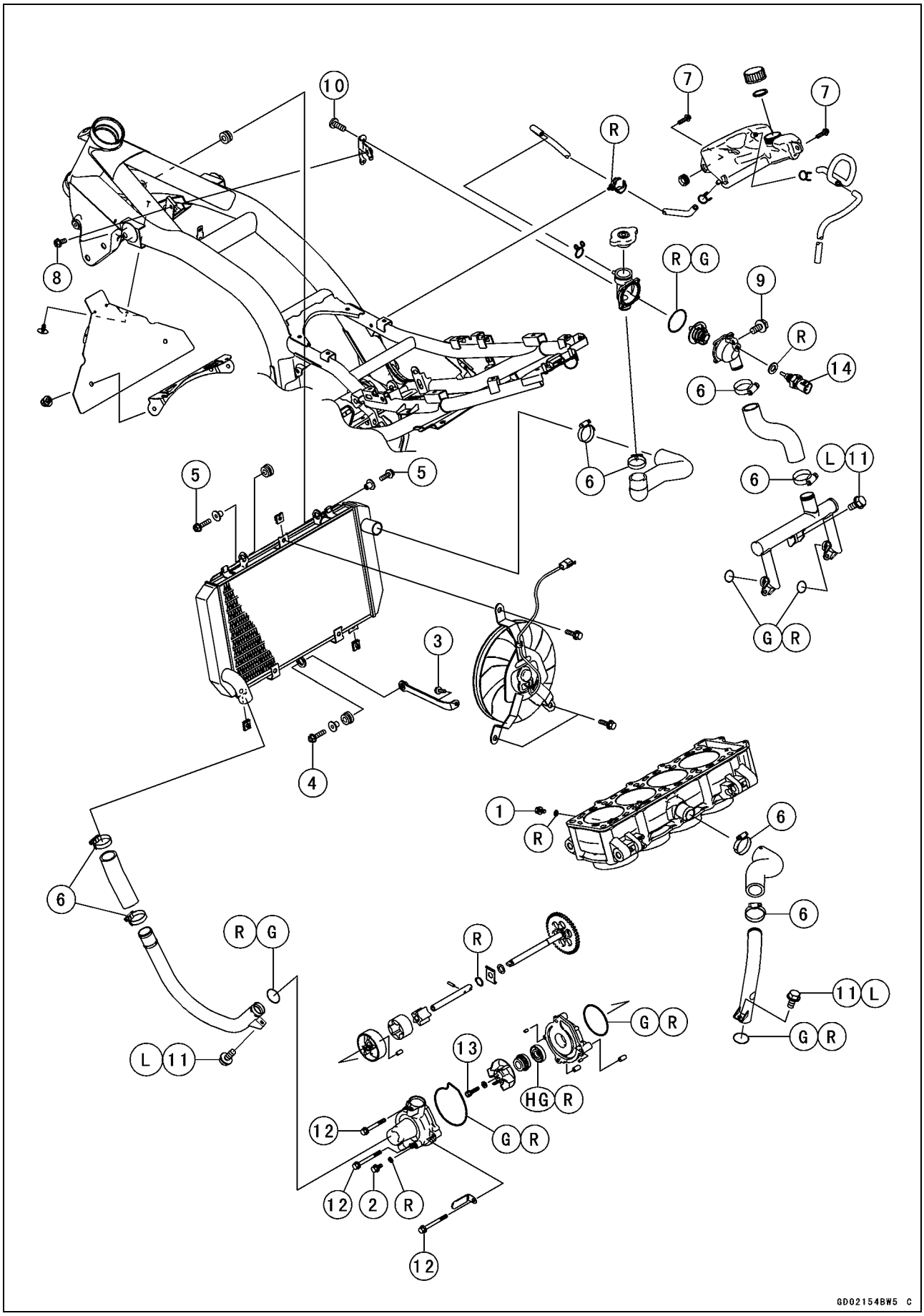

Exploded View

No.	Fastener	Torque			Remarks
		N·m	kgf·m	ft·lb	
1	Coolant Drain Bolt (Cylinder)	9.8	1.0	87 in·lb	
2	Coolant Drain Bolt (Water Pump)	11	1.1	97 in·lb	
3	Radiator Bracket Mounting Bolt	6.9	0.70	61 in·lb	
4	Radiator Lower Bolt	6.9	0.70	61 in·lb	
5	Radiator Upper Bolts	6.9	0.70	61 in·lb	
6	Radiator (Water) Hose Clamp Screws	3.0	0.31	27 in·lb	
7	Reserve Tank Bolts	9.8	1.0	87 in·lb	
8	Thermostat Bracket Bolt	6.9	0.70	61 in·lb	
9	Thermostat Housing Ground Bolt	6.9	0.70	61 in·lb	
10	Thermostat Housing Screws	5.9	0.60	52 in·lb	
11	Water Pipe Bolts	11	1.1	97 in·lb	L
12	Water Pump Cover Bolts	11	1.1	97 in·lb	
13	Water Pump Impeller Bolt	9.8	1.0	87 in·lb	
14	Water Temperature Sensor	25	2.5	18	

G: Apply grease.
HG: Apply high-temperature grease.
L: Apply a non-permanent locking agent.
R: Replacement Parts

Coolant Flow Chart

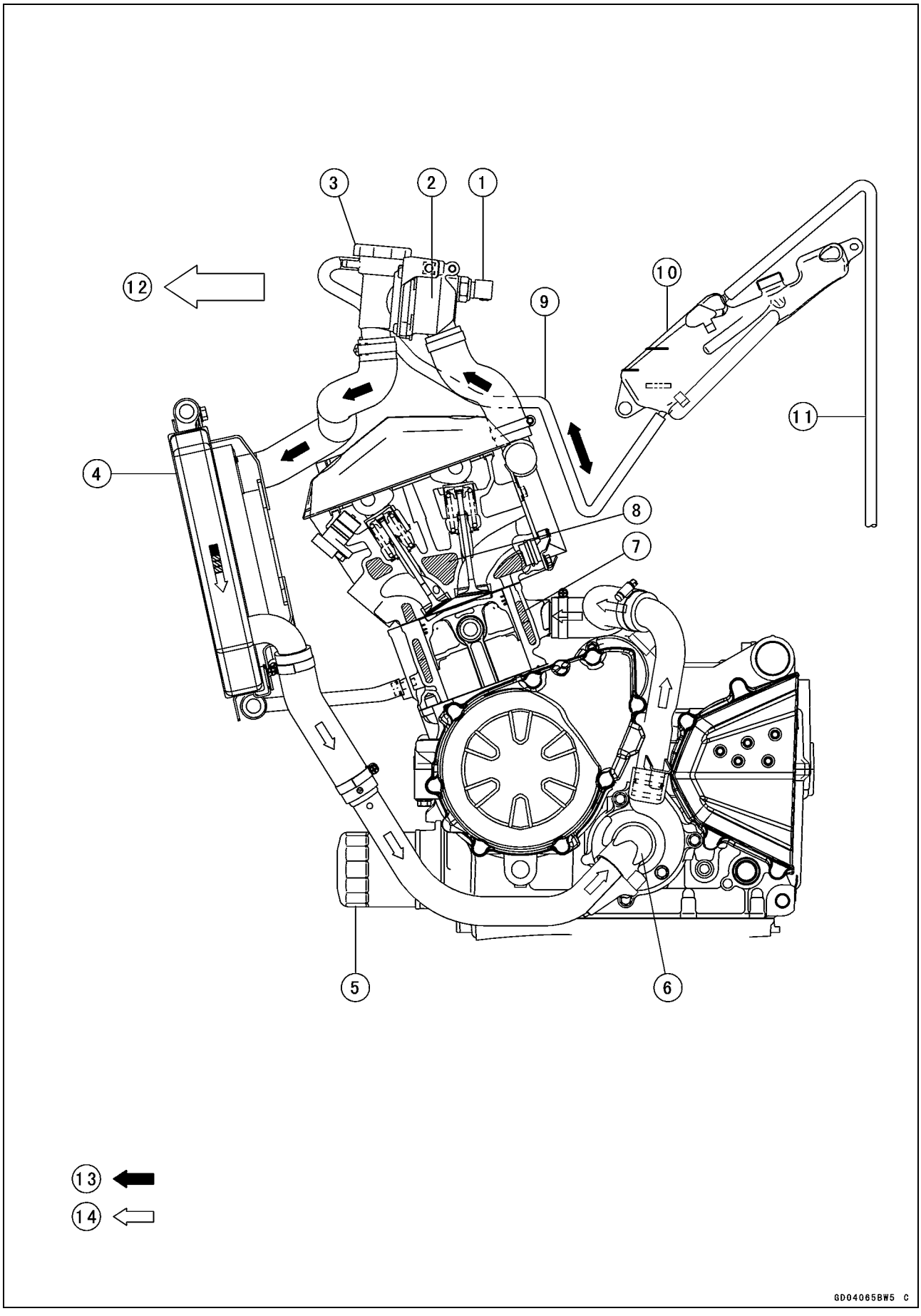

Coolant Flow Chart

1. Water Temperature Sensor
2. Thermostat Housing
3. Radiator Cap
4. Radiator
5. Oil Filter
6. Water Pump
7. Cylinder Jacket
8. Cylinder Head Jacket
9. Reserve Tank Hose
10. Reserve Tank
11. Reserve Tank Overflow Hose
12. Front
13. Hot Coolant
14. Cold Coolant

Permanent type antifreeze is used as a coolant to protect the cooling system from rust and corrosion. When the engine starts, the water pump turns and the coolant circulates.

The thermostat is a wax pellet type which opens or closes with coolant temperature changes. The thermostat continuously changes its valve opening to keep the coolant temperature at the proper level. When coolant temperature is less than 55°C (131°F), the thermostat closes so that the coolant flow is restricted through the air bleeder hole, causing the engine to warm up more quickly. When coolant temperature is more than 58 ~ 62°C (136 ~ 144°F), the thermostat opens and the coolant flows.

When the coolant temperature goes up beyond 100°C (212°F), the radiator fan relay conducts to operate the radiator fan. The radiator fan draws air through the radiator core when there is not sufficient air flow such as at low speeds. This increases up the cooling action of the radiator. When the coolant temperature is below 97°C (207°F), the fan relay opens and the radiator fan stops.

In this way, this system controls the engine temperature within narrow limits where the engine operates most efficiently even if the engine load varies.

The system is pressurized by the radiator cap to suppress boiling and the resultant air bubbles which can cause engine overheating. As the engine warms up, the coolant in the radiator and the water jacket expands. The excess coolant flows through the radiator cap and hose to the reserve tank to be stored there temporarily. Conversely, as the engine cools down, the coolant in the radiator and the water jacket contracts, and the stored coolant flows back to the radiator from the reserve tank.

The radiator cap has two valves. One is a pressure valve which holds the pressure in the system when the engine is running. When the pressure exceeds 93 ~ 123 kPa (0.95 ~ 1.25 kgf/cm², 13 ~ 18 psi), the pressure valve opens and releases the pressure to the reserve tank. As soon as pressure escapes, the valve closes, and keeps the pressure at 93 ~ 123 kPa (0.95 ~ 1.25 kgf/cm², 13 ~ 18 psi). When the engine cools down, another small valve (vacuum valve) in the cap opens. As the coolant cools, the coolant contracts to form a vacuum in the system. The vacuum valve opens and allows the coolant from the reserve tank to enter the radiator.

Specifications

Item	Standard
Coolant Provided when Shipping	
Type (Recommended)	Permanent type antifreeze (soft water and ethylene glycol plus corrosion and rust inhibitor chemicals for aluminum engines and radiators)
Color	Green
Mixed Ratio	Soft water 50%, coolant 50%
Freezing Point	−35°C (−31°F)
Total Amount	2.9 L (3.1 US qt) (reserve tank full level, including radiator and engine)
Radiator Cap	
Relief Pressure	93 ~ 123 kPa (0.95 ~ 1.25 kgf/cm², 13 ~ 18 psi)
Thermostat	
Valve Opening Temperature	58 ~ 62°C (136 ~ 144°F)
Valve Full Opening Lift	8 mm (0.31 in.) or more at 75°C (167°F)

Special Tools

Bearing Driver Set:
57001-1129

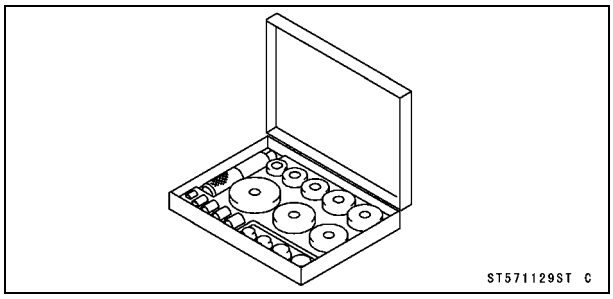

Oil Seal Driver:
57001-1660

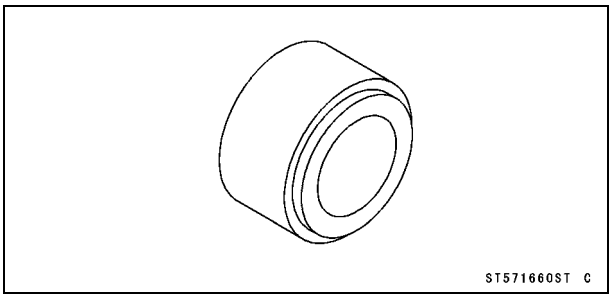

Coolant

Coolant Deterioration Inspection

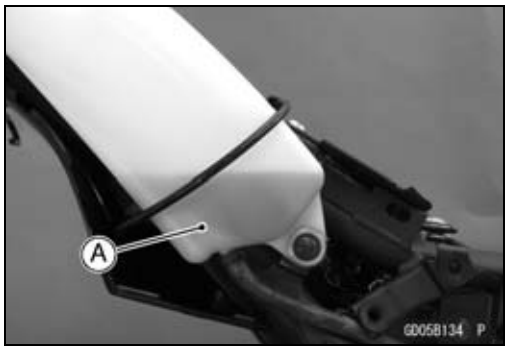

- Remove the right seat cover (see Seat Cover Removal in the Frame chapter).
- Visually inspect the coolant [A] in the reserve tank.

★If whitish cotton-like wafts are observed, aluminum parts in the cooling system are corroded. If the coolant is brown, iron or steel parts are rusting. In either case, flush the cooling system.

★If the coolant gives off an abnormal smell, check for a cooling system leak. It may be caused by exhaust gas leaking into the cooling system.

Coolant Level Inspection

- Refer to the Coolant Level in the Periodic Maintenance chapter.

Coolant Draining

- Refer to the Coolant Change in the Periodic Maintenance chapter.

Coolant Filling

- Refer to the Coolant Change in the Periodic Maintenance chapter.

Pressure Testing

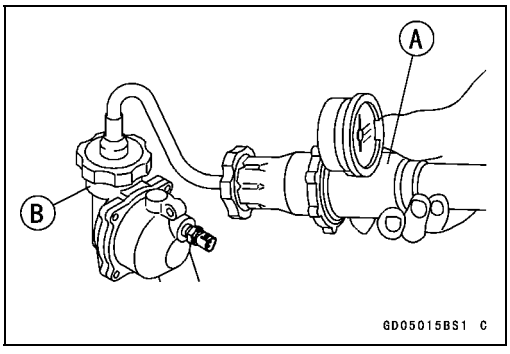

- Remove the fuel tank (see Fuel Tank Removal in the Fuel System (DFI) chapter).
- Remove the radiator cap, and install a cooling system pressure tester [A] on the filler neck [B].

NOTE

○*Wet the cap sealing surfaces with water or coolant to prevent pressure leaks.*

- Build up pressure in the system carefully until the pressure reaches 123 kPa (1.25 kgf/cm², 18 psi).

NOTICE

During pressure testing, do not exceed the pressure for which the system is designed. The maximum pressure is 123 kPa (1.25 kgf/cm², 18 psi).

- Watch the gauge for at least 6 seconds.

★If the pressure holds steady, the system is all right.

★If the pressure drops and no external source is found, check for internal leaks. Droplets in the engine oil indicate internal leakage. Check the cylinder head gasket and the water pump.

- Remove the pressure tester, replenish the coolant, and install the radiator cap.
- Install the fuel tank (see Fuel Tank Installation in the Fuel System (DFI) chapter).

Coolant

Cooling System Flushing

Over a period of time, the cooling system accumulates rust, scale, and lime in the water jacket and radiator. When this accumulation is suspected or observed, flush the cooling system. If this accumulation is not removed, it will clog up the water passage and considerable reduce the efficiency of the cooling system.

- Drain the cooling system (see Coolant Change in the Periodic Maintenance chapter).
- Fill the cooling system with fresh water mixed with a flushing compound.

NOTICE

Do not use a flushing compound which is harmful to the aluminum engine and radiator. Carefully follow the instructions supplied by the manufacturer of the cleaning product.

- Warm up the engine, and run it at normal operating temperature for about ten minutes.
- Stop the engine, and drain the cooling system.
- Fill the system with fresh water.
- Warm up the engine and drain the system.
- Repeat the previous two steps once more.
- Fill the system with a permanent type coolant and bleed the air from the system (see Coolant Change in the Periodic Maintenance chapter).

Coolant Reserve Tank Removal/Installation

- The coolant reserve tank is removed and installed during coolant change (see Coolant Change in the Periodic Maintenance chapter).

Water Pump

Water Pump Removal

- Refer to the Oil Pump Removal in the Engine Lubrication System chapter.

Water Pump Installation

- Refer to the Oil Pump Installation in the Engine Lubrication System chapter.

Water Pump Inspection

- Check the drainage outlet passage [A] at the bottom of the water pump body for coolant leaks.

★If the mechanical seal is damaged, the coolant leaks through the seal and drains through the passage. Replace the mechanical seal unit.

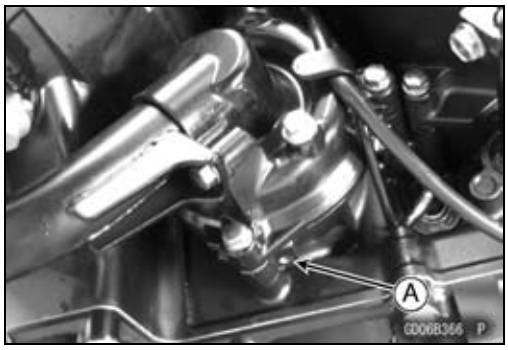

Water Pump Impeller Disassembly/Assembly

- Remove the water pump impeller (see Water Pump Removal).
- The sealing seat and rubber seal may be removed easily by hand.
- Apply coolant around the surfaces of the rubber seal and sealing seat.
- Install the rubber seal [A] and sealing seat [B] into the impeller by pressing them by hand until the seat stops at the bottom of the hole.
- Install the water pump impeller (see Water Pump Installation).

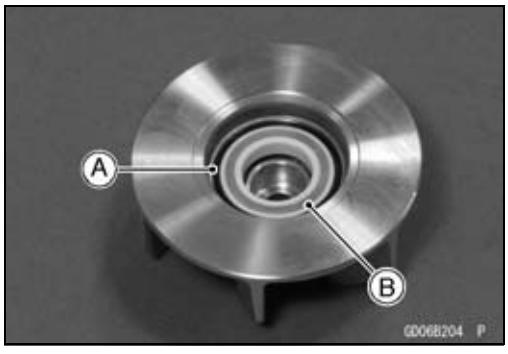

Water Pump Impeller Inspection

- Remove the water pump cover (see Water Pump Removal).
- Visually inspect the water pump impeller [A].

★If the surface is corroded or if the blades are damaged, replace the impeller.

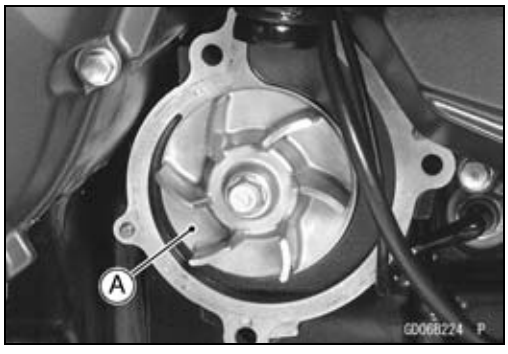

Water Pump Housing Disassembly

NOTICE

Do not damage the hole wall of the water pump housing.

- Insert a bar [A] into the pump housing [B], and hammer evenly around the circumference of the mechanical seal bottom [C].

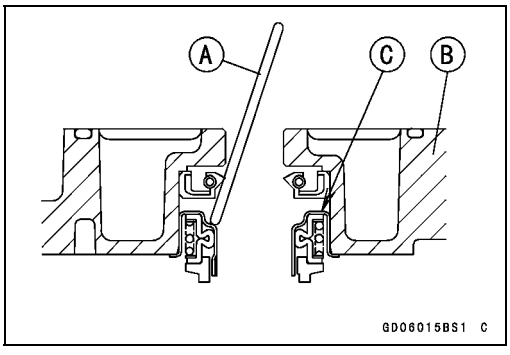

Water Pump

- Take the oil seal [A] out of the housing [B] with a hook [C].

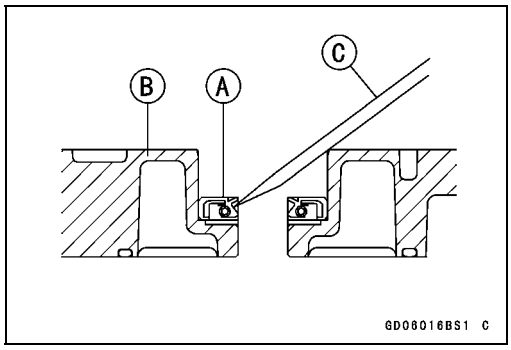

Water Pump Housing Assembly

NOTICE

Do not reuse the mechanical seal and oil seal.

- Apply high-temperature grease to the oil seal lips [A].
- Press the new oil seal into the housing with a bearing driver [B] until it stops at the bottom surface [C] of the housing.

  Special Tool - Bearing Driver Set: 57001-1129

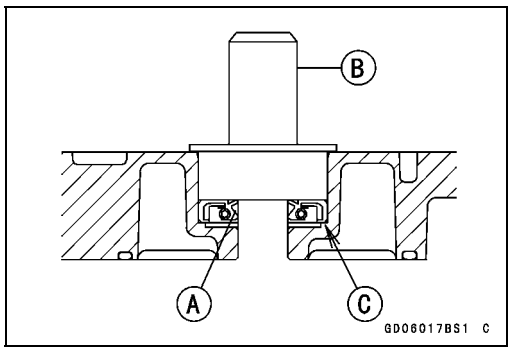

NOTICE

Be careful not to damage the sealing surface of the mechanical seal.

- Press the new mechanical seal into the housing with the oil seal driver [A] until its flange [B] touches the surface [C] of the housing.

  Special Tool - Oil Seal Driver: 57001-1660

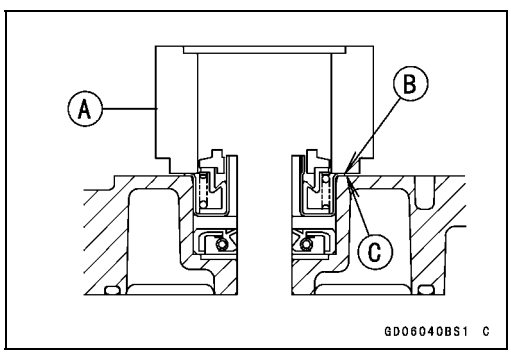

Mechanical Seal Inspection

- Remove the water pump impeller (see Water Pump Removal).
- Visually inspect the mechanical seal.

★If any one of the parts is damaged, replace the mechanical seal as a unit.

Impeller Sealing Seat Surface [A]
Rubber Seal [B]
Mechanical Seal [C]

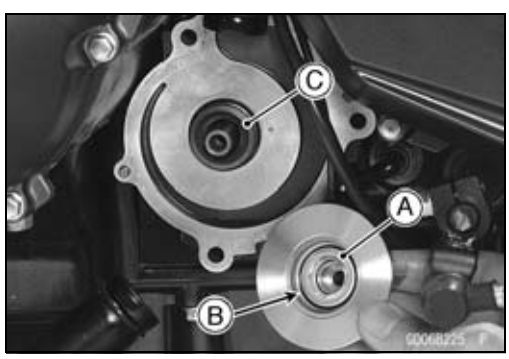

Radiator

Radiator and Radiator Fan Removal

⚠ WARNING

A spinning radiator fan can cause serious injury. The radiator fan is connected directly to the battery and may start even if the ignition switch is off. Do not touch the radiator fan until the radiator fan motor lead connector has been disconnected from the battery.

- Remove:
  Center Fairings (see Center Fairing Removal in the Frame chapter)
  Coolant (Drain, see Coolant Change in the Periodic Maintenance chapter)
  Fuel Tank (see Fuel Tank Removal in the Fuel System (DFI) chapter)
  Radiator Fan Motor Lead Connector [A] (Disconnect)

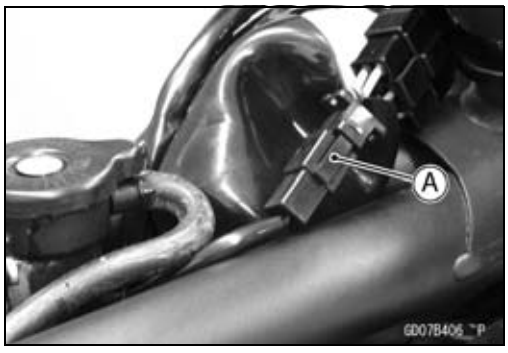

- Remove:
  Radiator Hose Clamp Screw [A] (Loosen)
  Radiator Lower Bolt [B]
  Radiator Upper Bolt (Left) [C]

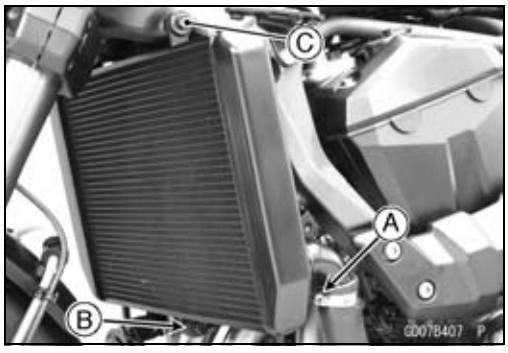

- Remove:
  Radiator Hose Clamp Screw [A] (Loosen)
  Radiator Upper Bolt (Right) [B]
  Radiator [C]

NOTICE

Do not touch the radiator core. This could damage the radiator fins, resulting in loss of cooling efficiency.

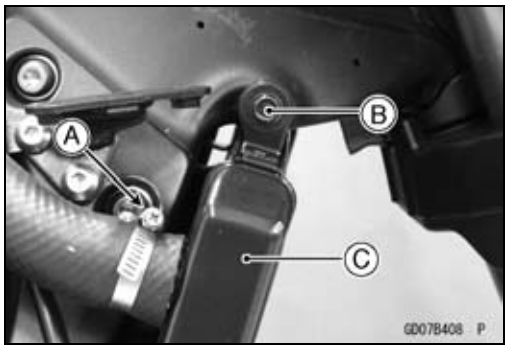

- Remove:
  Radiator Fan Mounting Bolts [A]
  Radiator Fan [B]

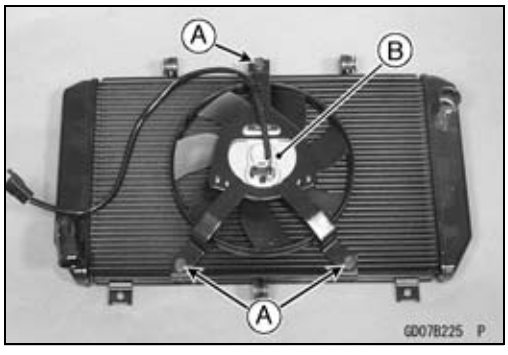

Radiator

Radiator and Radiator Fan Installation

- Installation is the reverse of removal.
- Run the radiator fan motor lead correctly (see Cable, Wire, and Hose Routing section in the Appendix chapter).
- Install the radiator bracket collars [A] as shown in the figure.
  Rubber Dampers [B]
  Upside [C]
  Radiator [D]
  Bracket [E]
- Tighten:

Torque - Radiator Upper Bolts [F]: 6.9 N·m (0.70 kgf·m, 61 in·lb)
Radiator Lower Bolt [G]: 6.9 N·m (0.70 kgf·m, 61 in·lb)

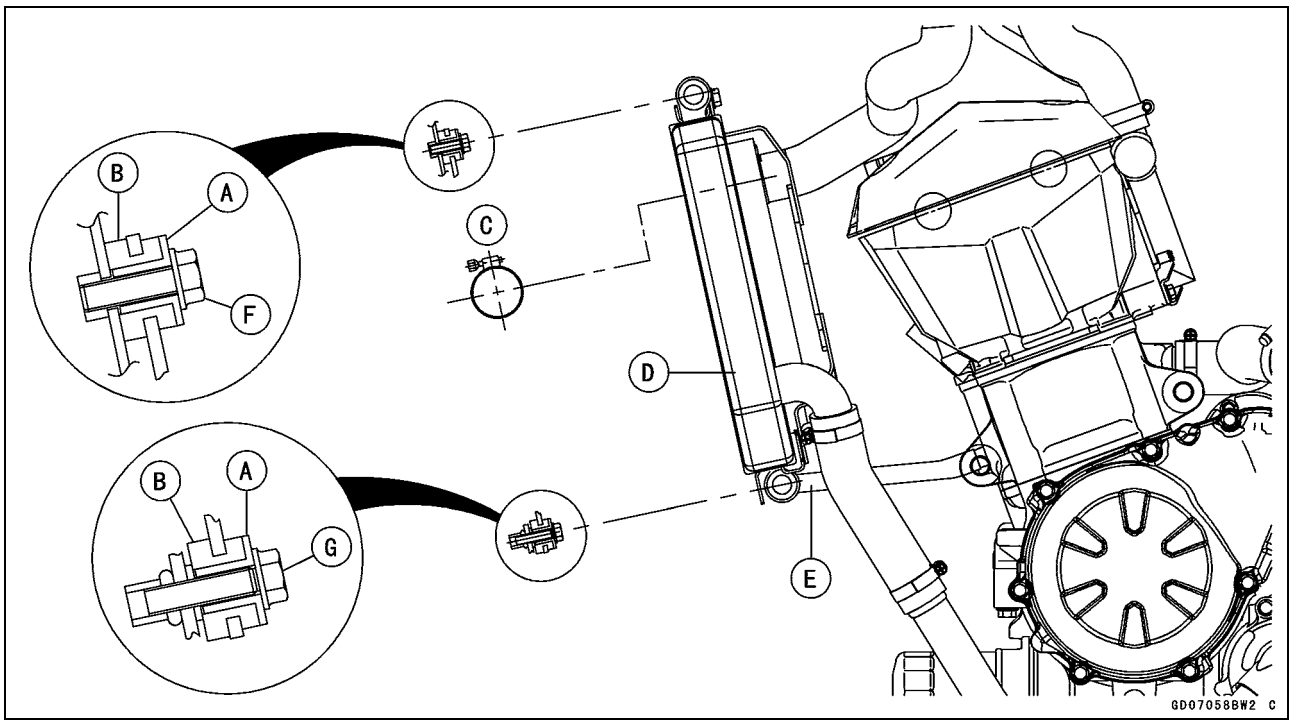

Radiator Inspection

- Check the radiator core.

★If there are obstructions to air flow, remove them.

★If the corrugated fins [A] are deformed, carefully straighten them.

★If the air passages of the radiator core are blocked more than 20% by unremovable obstructions or irreparably deformed fins, replace the radiator with a new one.

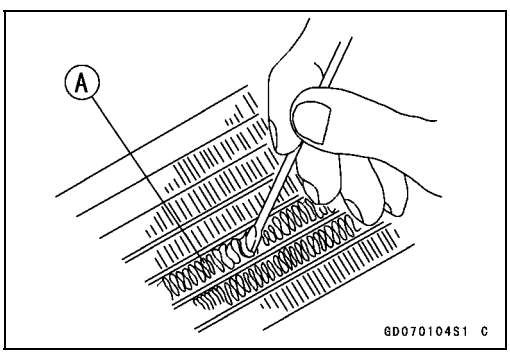

Radiator

NOTICE

When cleaning the radiator with steam cleaner, be careful of the following to prevent radiator damage:
Keep the steam gun [A] away more than 0.5 m (1.6 ft) [B] from the radiator core.
Hold the steam gun perpendicular [C] (not oblique [D]) to the core surface.
Run the steam gun, following the core fin direction.

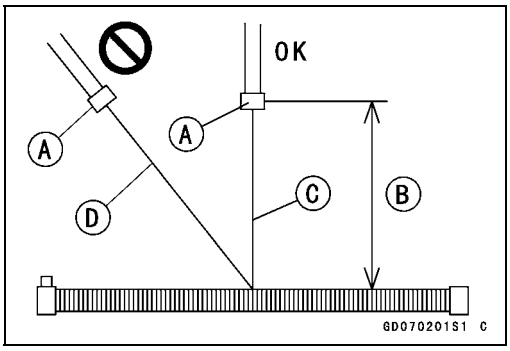

Radiator Cap Inspection

- Remove:
  Fuel Tank (see Fuel Tank Removal in the Fuel System (DFI) chapter)
  Radiator Cap
- Check the condition of the bottom [A] and top [B] valve seals and valve spring [C].

★If any one of them shows visible damage, replace the cap with a new one.

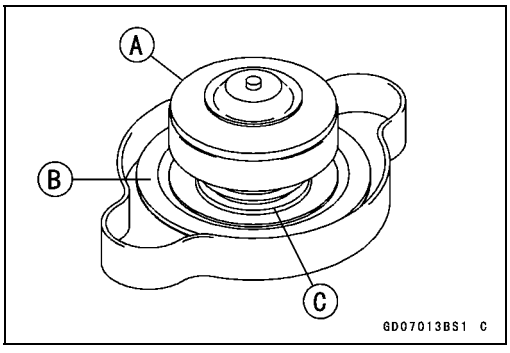

- Install the cap [A] on a cooling system pressure tester [B].

NOTE

○*Wet the cap sealing surfaces with water or coolant to prevent pressure leaks.*

- Watching the pressure gauge, pump the pressure tester to build up the pressure until the relief valve opens: the gauge needle flicks downward. Stop pumping and measure leak time at once. The relief valve must open within the specified range in the table below and the gauge hand must remain within the same range at least 6 seconds.

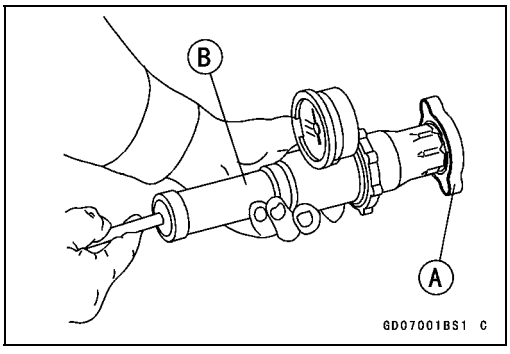

Radiator Cap Relief Pressure
Standard: 93 ~ 123 kPa (0.95 ~ 1.25 kgf/cm², 13 ~ 18 psi)

★If the cap can not hold the specified pressure or if it holds too much pressure, replace it with a new one.

Radiator Filler Neck Inspection

- Remove:
  Fuel Tank (see Fuel Tank Removal in the Fuel System (DFI) chapter)
  Radiator Cap
- Check the radiator filler neck for signs of damage.
- Check the condition of the top and bottom sealing seats [A] in the filler neck. They must be smooth and clean for the radiator cap to function properly.

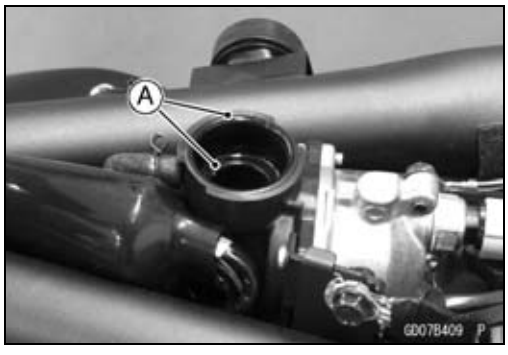

Thermostat

Thermostat Removal

- Remove:
  Coolant (Drain, see Coolant Change in the Periodic Maintenance chapter)
  Fuel Tank (see Fuel Tank Removal in the Fuel System (DFI) chapter)
  Right Center Fairing (see Center Fairing Removal in the Frame chapter)
  Radiator Hose Clamp Screw [A] (Loosen)
  Water Hose Clamp Screw [B] (Loosen)

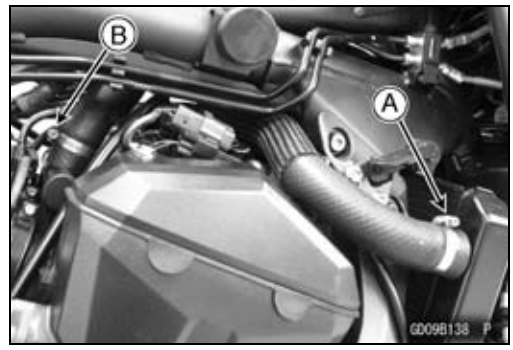

- Remove:
  Thermostat Bracket Bolt [A]
  Ground Bolt [B]
  Ground Leads [C]
  Water Temperature Sensor Lead Connector [D] (Disconnect)
  Water Hose [E]
  Thermostat Housing [F]

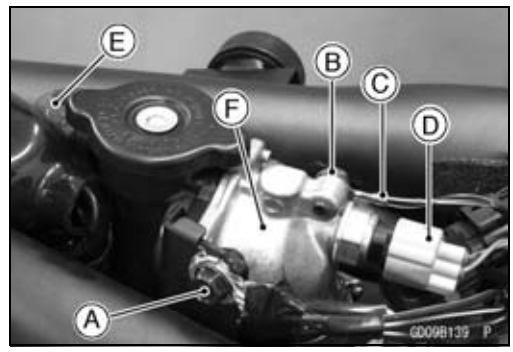

- Remove the screws [A], take off the cap [B], and take out the thermostat.

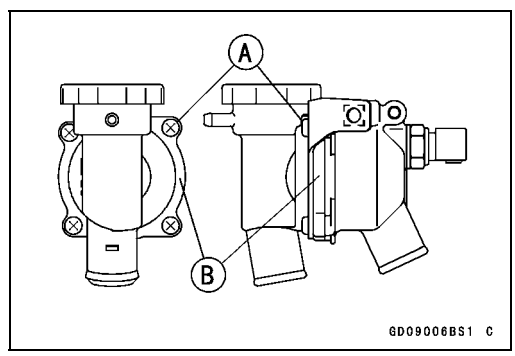

Thermostat Installation

- Install the thermostat [A] in the housing so that the air bleeder hole [B] is on top.
- Apply grease to the new O-ring.
- Install a new O-ring into the housing.
- Tighten:

  Torque - Thermostat Housing Screws: 5.9 N·m (0.60 kgf·m, 52 in·lb)

- Run the hoses correctly (see Cable, Wire, and Hose Routing section in the Appendix chapter).
- Tighten:

  Torque - Thermostat Bracket Bolt: 6.9 N·m (0.70 kgf·m, 61 in·lb)
  Thermostat Housing Ground Bolt: 6.9 N·m (0.70 kgf·m, 61 in·lb)
  Radiator (Water) Hose Clamp Screws: 3.0 N·m (0.31 kgf·m, 27 in·lb)

- Fill the radiator with coolant (see Coolant Change in the Periodic Maintenance chapter).

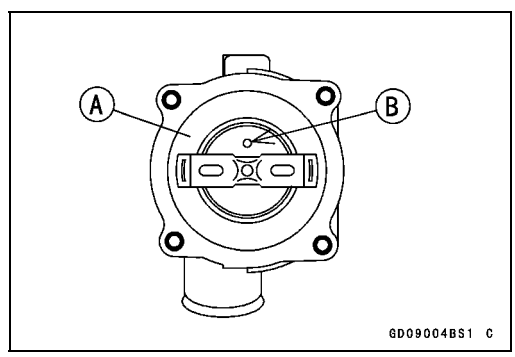

Thermostat

Thermostat Inspection

- Remove the thermostat (see Thermostat Removal), and inspect the thermostat valve [A] at room temperature.

★If the valve is open, replace the thermostat with a new one.

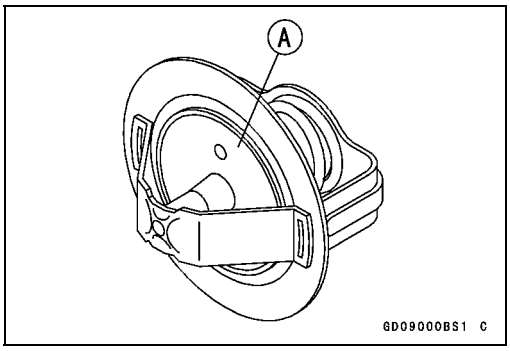

- To check valve opening temperature, suspend the thermostat [A] in a container of water and raise the temperature of the water.

○The thermostat must be completely submerged and must not touch the container sides or bottom. Suspend an accurate thermometer [B] in the water so that the heat sensitive portions [C] are located in almost the same depth. It must not touch the container, either.

★If the measurement is out of the specified range, replace the thermostat with a new one.

Thermostat Valve Opening Temperature
58 ~ 62°C (136 ~ 144°F)

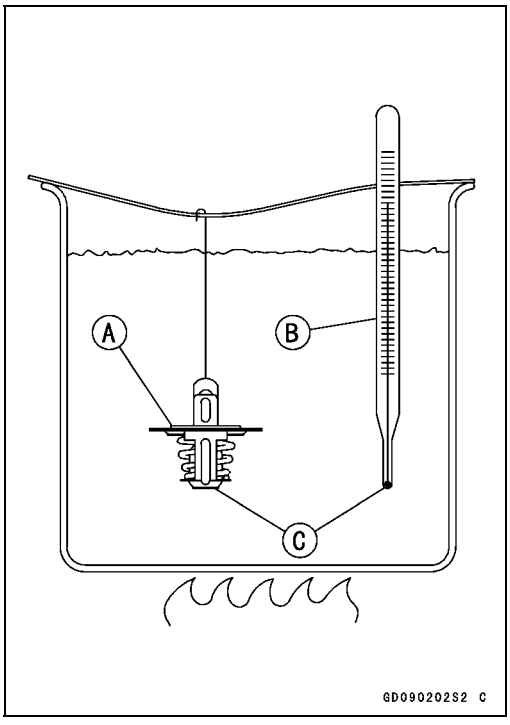

Hose and Pipes

Hose Installation

- Install the hoses and pipes, being careful to follow bending direction. Avoid sharp bending, kinking, flattening or twisting.
- Run the hoses (see Cable, Wire, and Hose Routing section in the Appendix chapter).
- Install the clamp [A] as near as possible to the hose end to clear the raised rib of the fitting. This will prevent the hoses from working loose.

○The clamp screws should be positioned correctly to prevent the clamps from contacting the other parts.

Torque - Radiator (Water) Hose Clamp Screws: 3.0 N·m (0.31 kgf·m, 27 in·lb)

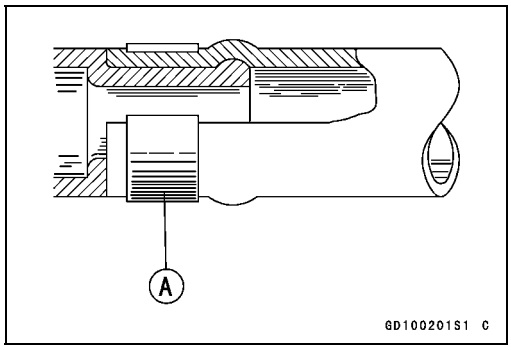

Hose Inspection

- Refer to the Radiator Hose Damage and Installation Condition Inspection in the Periodic Maintenance chapter.

Water Temperature Sensor

NOTICE

The water temperature sensor should never be allowed to fall on a hard surface. Such a shock to the water temperature sensor can damage it.

Water Temperature Sensor Removal/Installation

- Refer to the Water Temperature Sensor Removal/Installation in the Fuel System (DFI) chapter.

Water Temperature Sensor Inspection

- Refer to the Water Temperature Sensor Inspection in the Electrical System chapter.

Engine Top End

Table of Contents

Exploded View 5-2
Exhaust System..... 5-6
Specifications 5-8
Special Tools and Sealant 5-10
Clean Air System..... 5-12
Air Suction Valve Removal..... 5-12
Air Suction Valve Installation..... 5-12
Air Suction Valve Inspection 5-12
Air Switching Valve Removal 5-13
Air Switching Valve Installation 5-13
Air Switching Valve Operation Test..... 5-13
Air Switching Valve Unit Test 5-13
Clean Air System Hose Inspection..... 5-13
Cylinder Head Cover 5-14
Cylinder Head Cover Removal 5-14
Cylinder Head Cover Installation . 5-14
Camshaft Chain Tensioner 5-15
Camshaft Chain Tensioner Removal 5-15
Camshaft Chain Tensioner Installation 5-15
Camshaft, Camshaft Chain 5-16
Camshaft Removal 5-16
Camshaft Installation 5-16
Camshaft, Camshaft Cap Wear Inspection..... 5-17
Camshaft Runout Inspection..... 5-18
Cam Wear Inspection 5-18
Camshaft Chain Removal 5-18
Cylinder Head..... 5-19
Cylinder Compression Measurement 5-19
Cylinder Head Removal 5-20
Cylinder Head Installation 5-20
Cylinder Head Warp Inspection ... 5-21
Valves 5-22
Valve Clearance Inspection 5-22
Valve Clearance Adjustment..... 5-22
Valve Removal 5-22
Valve Installation 5-22
Valve Guide Removal 5-22
Valve Guide Installation 5-23
Valve-to-Guide Clearance Measurement (Wobble Method) 5-24
Valve Seat Inspection 5-24
Valve Seat Repair 5-25
Cylinder, Pistons..... 5-30
Cylinder Removal..... 5-30
Cylinder Installation..... 5-30
Piston Removal..... 5-31
Piston Installation..... 5-31
Cylinder Wear Inspection..... 5-32
Piston Wear Inspection 5-32
Piston Ring, Piston Ring Groove Wear Inspection 5-33
Piston Ring Groove Width Inspection..... 5-33
Piston Ring Thickness Inspection 5-33
Piston Ring End Gap Inspection .. 5-34
Throttle Body Holder..... 5-35
Throttle Body Holder Installation.. 5-35
Muffler..... 5-36
Muffler Body Removal..... 5-36
Muffler Body Installation..... 5-37
Exhaust Pipe Removal..... 5-38
Exhaust Pipe Installation..... 5-39
Exhaust Butterfly Valve Cable Removal 5-40
Exhaust Butterfly Valve Cable Installation 5-41

Exploded View

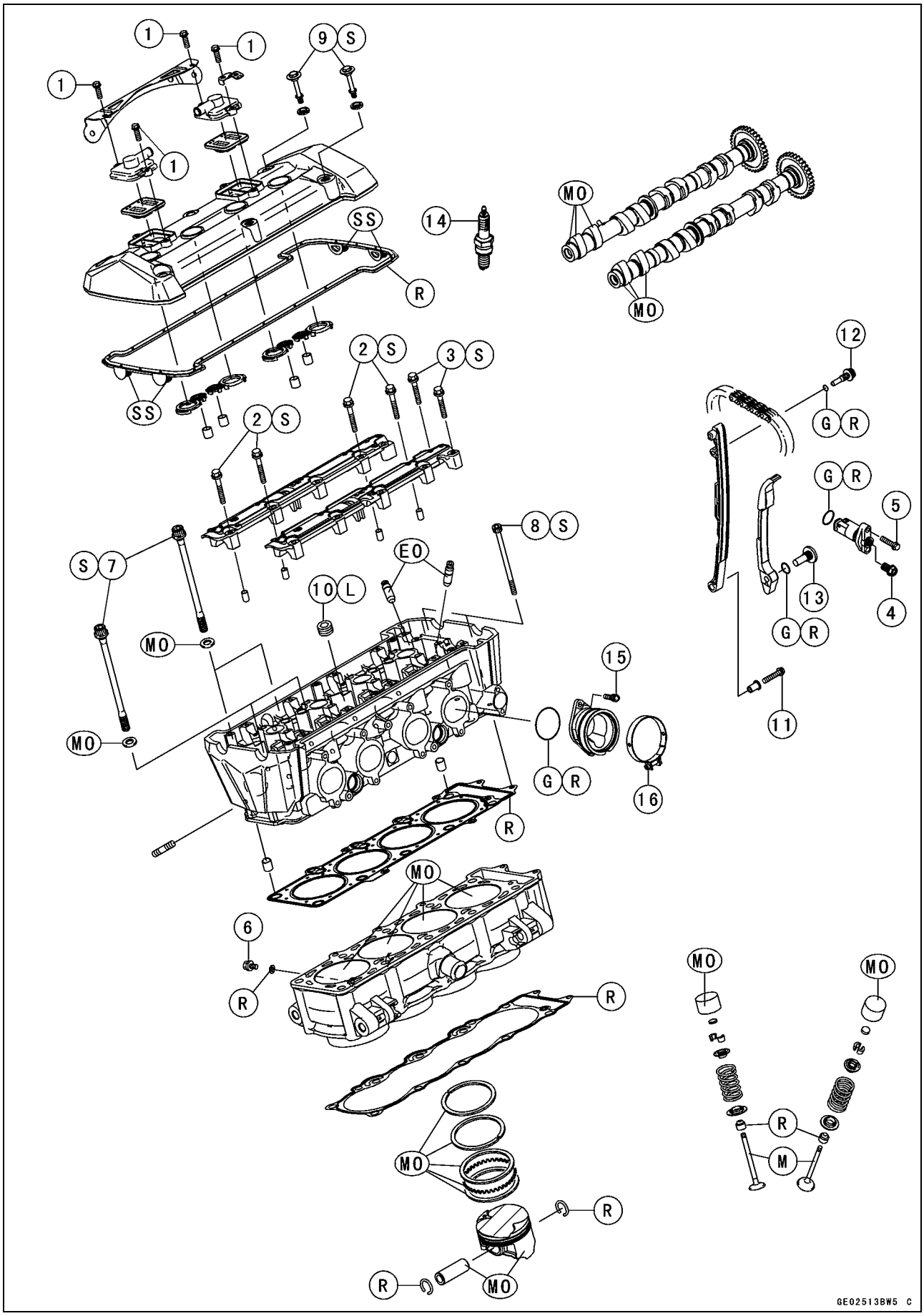

Exploded View

No.	Fastener	Torque			Remarks
		N·m	kgf·m	ft·lb	
1	Air Suction Valve Cover Bolts	9.8	1.0	87 in·lb	
2	Camshaft Cap Bolts (L = 45 mm)	12	1.2	106 in·lb	S
3	Camshaft Cap Bolts (L = 40 mm)	12	1.2	106 in·lb	S
4	Camshaft Chain Tensioner Cap Bolt	20	2.0	15	
5	Camshaft Chain Tensioner Mounting Bolts	11	1.1	97 in·lb	
6	Coolant Drain Bolt (Cylinder)	9.8	1.0	87 in·lb	
7	Cylinder Head Bolts (M10 New Bolts)	54	5.5	40	S
	Cylinder Head Bolts (M10 Used Bolts)	49	5.0	36	S
8	Cylinder Head Bolts (M6)	12	1.2	106 in·lb	S
9	Cylinder Head Cover Bolts	9.8	1.0	87 in·lb	S
10	Cylinder Head Jacket Plugs	22	2.2	16	L
11	Front Camshaft Chain Guide Bolt (Lower)	12	1.2	106 in·lb	
12	Front Camshaft Chain Guide Bolt (Upper)	25	2.5	18	
13	Rear Camshaft Chain Guide Bolt	25	2.5	18	
14	Spark Plugs	13	1.3	115 in·lb	
15	Throttle Body Assy Holder Bolts	13	1.3	115 in·lb	
16	Throttle Body Assy Holder Clamp Bolts	2.0	0.20	18 in·lb	

EO: Apply engine oil.
G: Apply grease.
L: Apply a non-permanent locking agent.
M: Apply molybdenum disulfide grease.
MO: Apply molybdenum disulfide oil solution.
(mixture of the engine oil and molybdenum disulfide grease in a weight ratio 10 : 1)
R: Replacement Parts
S: Follow the specified tightening sequence.
SS: Apply silicone sealant.

Exploded View

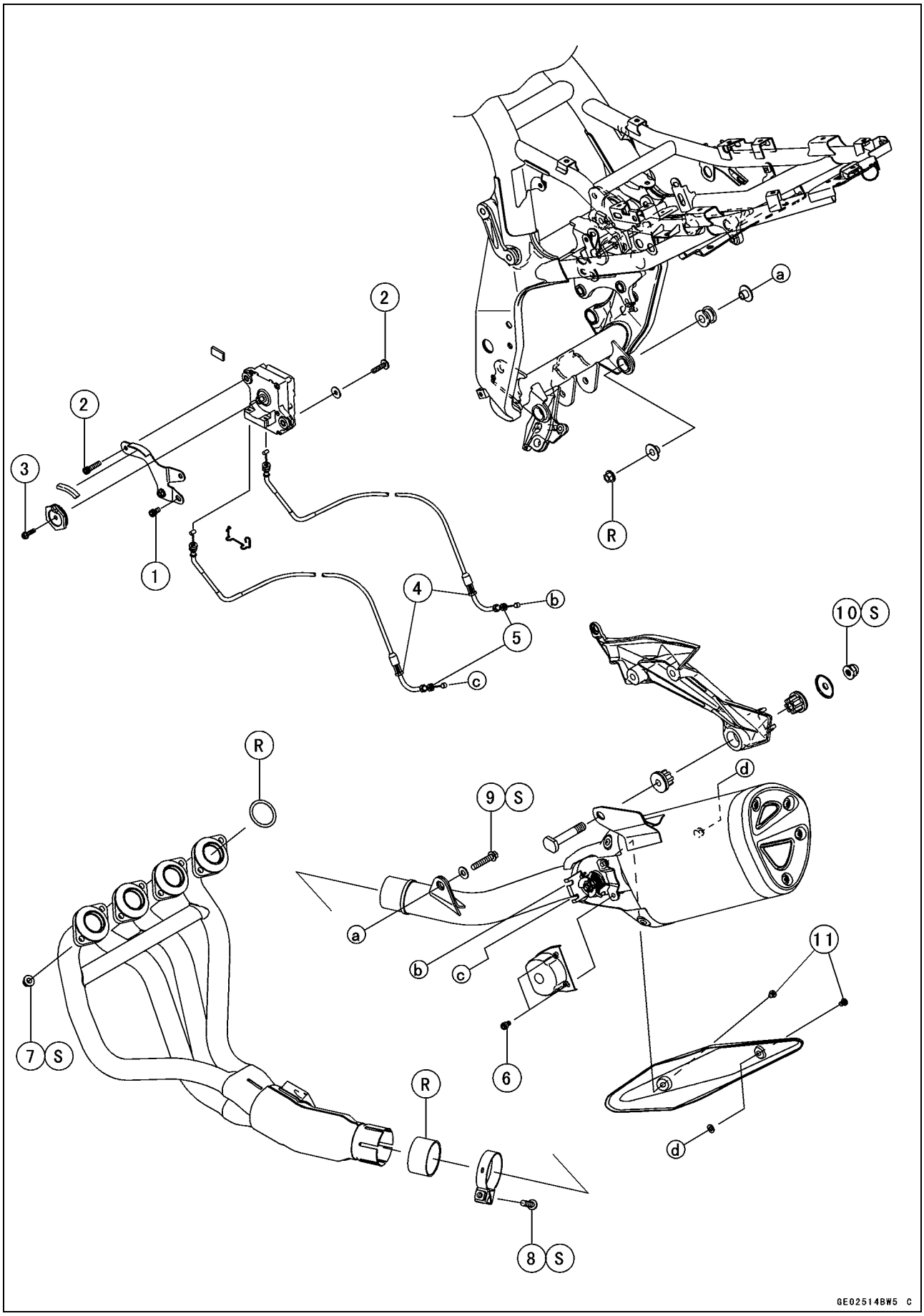

Exploded View

No.	Fastener	Torque			Remarks
		N·m	kgf·m	ft·lb	
1	Exhaust Butterfly Valve Actuator Bracket Bolt	6.9	0.70	61 in·lb	
2	Exhaust Butterfly Valve Actuator Mounting Bolts	6.9	0.70	61 in·lb	
3	Exhaust Butterfly Valve Actuator Pulley Bolt	5.0	0.51	44 in·lb	
4	Exhaust Butterfly Valve Cable Adjuster Locknuts	6.9	0.70	61 in·lb	
5	Exhaust Butterfly Valve Cable Locknuts	6.9	0.70	61 in·lb	
6	Exhaust Butterfly Valve Cover Bolts	6.9	0.70	61 in·lb	
7	Exhaust Pipe Manifold Holder Nuts	17	1.7	13	S
8	Muffler Body Clamp Bolt	15	1.5	11	S
9	Muffler Body Mounting Bolt	17	1.7	13	S
10	Muffler Body Mounting Nut	34	3.5	25	S
11	Muffler Body Side Cover Bolts	6.9	0.70	61 in·lb	

R: Replacement Parts
S: Follow the specified tightening sequence.

Exhaust System

Exhaust System

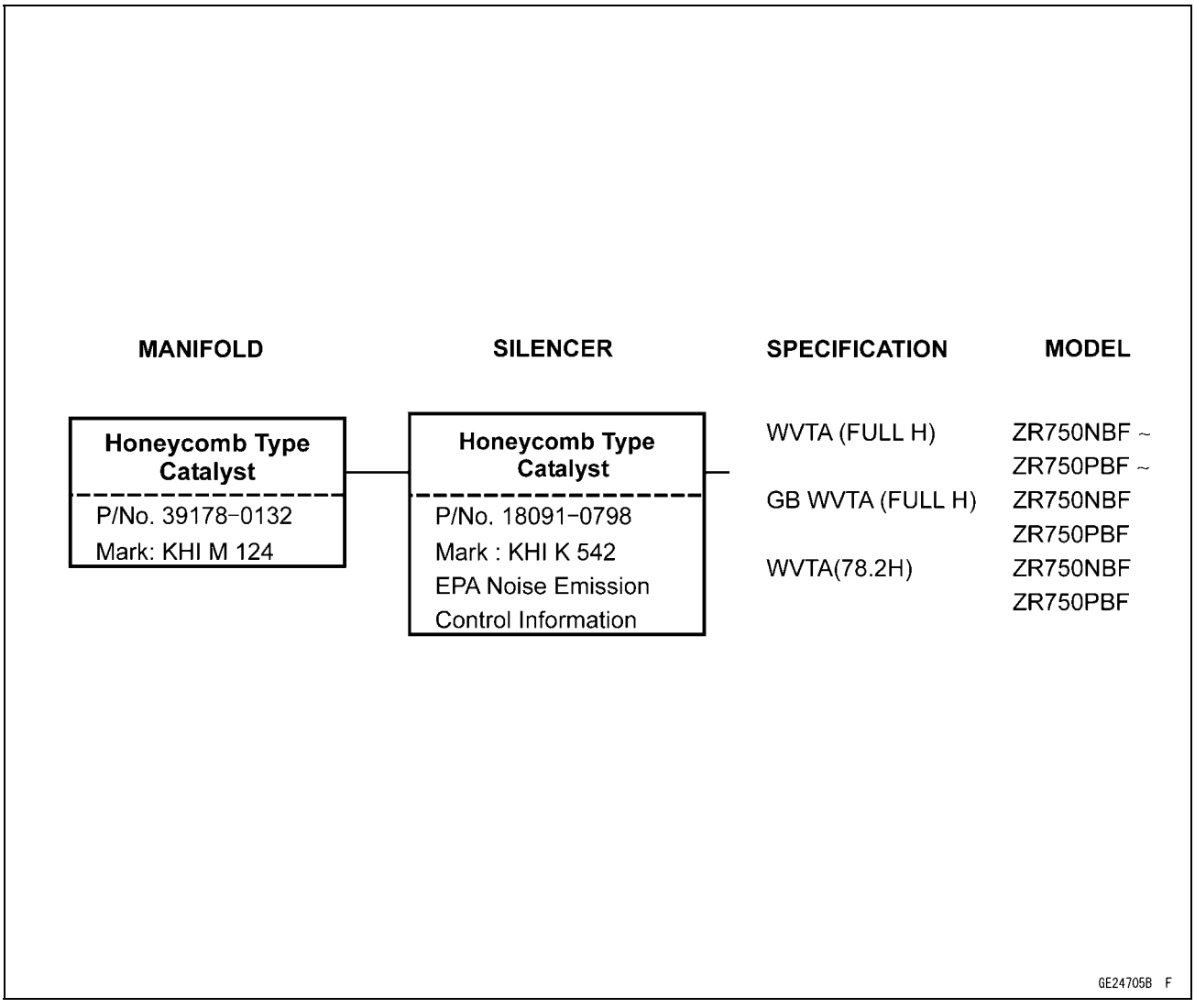

Full: Full Power
H: Honeycomb Type Catalyst

Exhaust System

Manifold Mark Position [A]

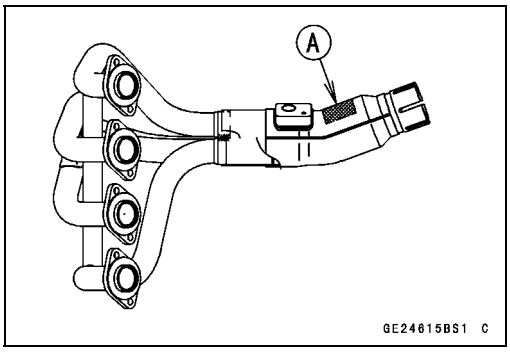

Muffler Body Mark Position [B]

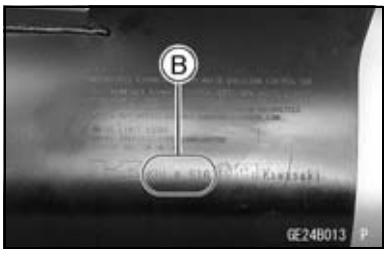

Honeycomb Type Catalyst Position [C]

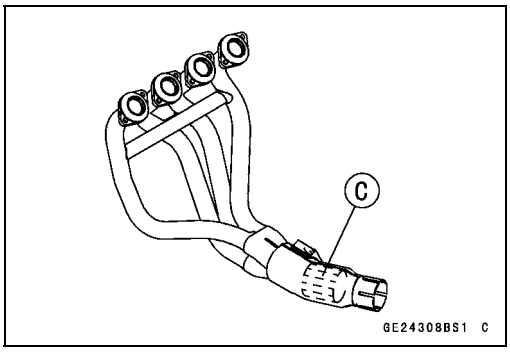

Honeycomb Type Catalyst Position [D]

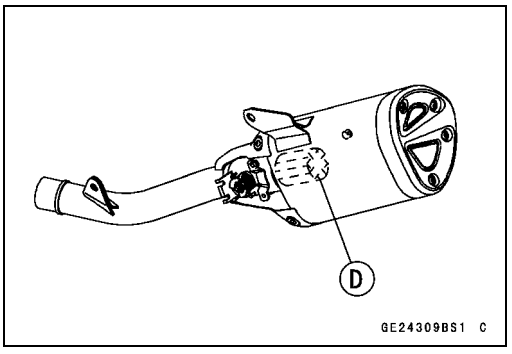

Manifold with Hole [E] for Oxygen Sensor.
Oxygen Sensor [F]

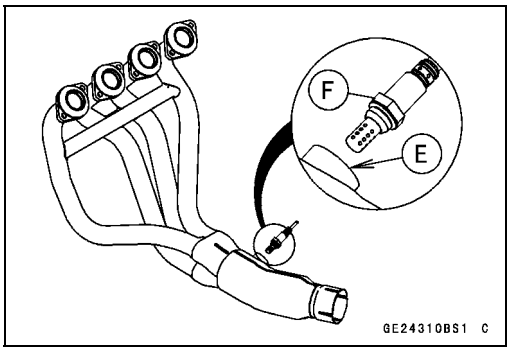

Specifications

Item	Standard	Service Limit
Camshafts		
Cam Height:		
Exhaust	35.742 ~ 35.858 mm (1.4072 ~ 1.4117 in.)	35.64 mm (1.403 in.)
Intake	35.942 ~ 36.058 mm (1.4150 ~ 1.4196 in.)	35.84 mm (1.411 in.)
Camshaft Journal, Camshaft Cap Clearance	0.028 ~ 0.071 mm (0.0011 ~ 0.0028 in.)	0.16 mm (0.0063 in.)
Camshaft Journal Diameter	23.950 ~ 23.972 mm (0.9429 ~ 0.9438 in.)	23.92 mm (0.942 in.)
Camshaft Bearing Inside Diameter	24.000 ~ 24.021 mm (0.9449 ~ 0.9457 in.)	24.08 mm (0.948 in.)
Camshaft Runout	TIR 0.02 mm (0.0008 in.) or less	TIR 0.1 mm (0.004 in.)
Cylinder Head		
Cylinder Compression	(Usable Range) 945 ~ 1 350 kPa (9.6 ~ 13.8 kgf/cm², 137 ~ 196 psi) at 265 r/min (rpm)	– – –
Cylinder Head Warp	– – –	0.05 mm (0.002 in.)
Valves		
Valve Clearance:		
Exhaust	0.22 ~ 0.31 mm (0.0087 ~ 0.0122 in.)	– – –
Intake	0.15 ~ 0.24 mm (0.0059 ~ 0.0094 in.)	– – –
Valve Head Thickness:		
Exhaust	1.0 mm (0.039 in.)	0.5 mm (0.020 in.)
Intake	0.5 mm (0.020 in.)	0.25 mm (0.012 in.)
Valve Stem Bend	TIR 0.01 mm (0.0004 in.) or less	TIR 0.05 mm (0.002 in.)
Valve Stem Diameter:		
Exhaust	3.955 ~ 3.970 mm (0.1557 ~ 0.1563 in.)	3.94 mm (0.155 in.)
Intake	3.975 ~ 3.990 mm (0.1565 ~ 0.1571 in.)	3.96 mm (0.156 in.)
Valve Guide Inside Diameter:		
Exhaust	4.000 ~ 4.012 mm (0.1575 ~ 0.1580 in.)	4.08 mm (0.161 in.)
Intake	4.000 ~ 4.012 mm (0.1575 ~ 0.1580 in.)	4.08 mm (0.161 in.)
Valve/Valve Guide Clearance (Wobble Method):		
Exhaust	0.09 ~ 0.17 mm (0.0035 ~ 0.0067 in.)	0.37 mm (0.016 in.)
Intake	0.03 ~ 0.11 mm (0.0012 ~ 0.0043 in.)	0.32 mm (0.013 in.)
Valve Seat Cutting Angle	32°, 45°, 60°	– – –
Valve Seating Surface:		
Width:		
Exhaust	0.5 ~ 1.0 mm (0.020 ~ 0.039 in.)	– – –
Intake	0.5 ~ 1.0 mm (0.020 ~ 0.039 in.)	– – –
Outside Diameter:		
Exhaust	21.6 ~ 21.8 mm (0.850 ~ 0.858 in.)	– – –
Intake	26.4 ~ 26.6 mm (1.039 ~ 1.047 in.)	– – –
Valve Spring Free Length:		
Exhaust	40.7 mm (1.602 in.)	38.9 mm (1.531 in.)
Intake	40.7 mm (1.602 in.)	38.9 mm (1.531 in.)

Specifications

Item	Standard	Service Limit
Cylinder, Pistons		
Cylinder Inside Diameter	68.400 ~ 68.412 mm (2.6929 ~ 2.6934 in.)	68.50 mm (2.6969 in.)
Piston Diameter	68.345 ~ 68.360 mm (2.6907 ~ 2.6913 in.)	68.20 mm (2.6850 in.)
Piston/Cylinder Clearance	0.040 ~ 0.067 mm (0.0016 ~ 0.0026 in.)	– – –
Piston Ring/Groove Clearance:		
Top	0.04 ~ 0.07 mm (0.0016 ~ 0.0028 in.)	0.17 mm (0.0067 in.)
Second	0.02 ~ 0.05 mm (0.0008 ~ 0.0020 in.)	0.15 mm (0.0059 in.)
Piston Ring Groove Width:		
Top	0.83 ~ 0.85 mm (0.0327 ~ 0.0335 in.)	0.93 mm (0.037 in.)
Second	0.81 ~ 0.83 mm (0.0319 ~ 0.0327 in.)	0.91 mm (0.036 in.)
Piston Ring Thickness:		
Top	0.78 ~ 0.79 mm (0.0307 ~ 0.0311 in.)	0.71 mm (0.028 in.)
Second	0.78 ~ 0.79 mm (0.0307 ~ 0.0311 in.)	0.71 mm (0.028 in.)
Piston Ring End Gap:		
Top	0.30 ~ 0.40 mm (0.0118 ~ 0.0157 in.)	0.7 mm (0.028 in.)
Second	0.45 ~ 0.55 mm (0.0177 ~ 0.0217 in.)	0.9 mm (0.035 in.)

Special Tools and Sealant

Compression Gauge, 20 kgf/cm²:
57001-221

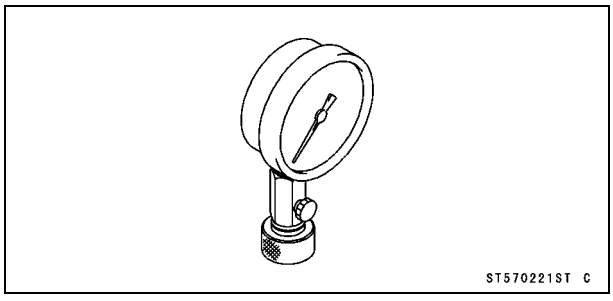

Valve Spring Compressor Assembly:
57001-241

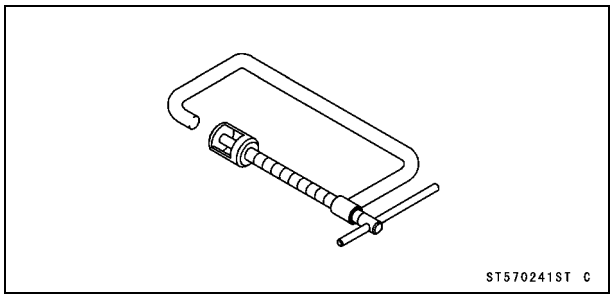

Piston Pin Puller Assembly:
57001-910

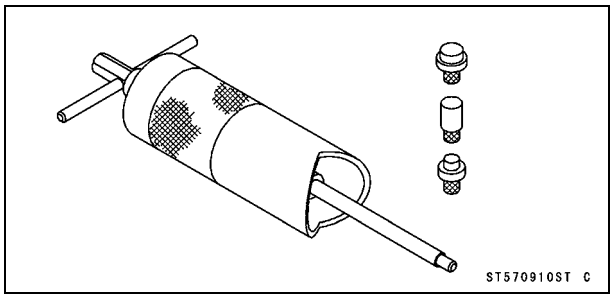

Valve Seat Cutter, 45° - ϕ24.5:
57001-1113

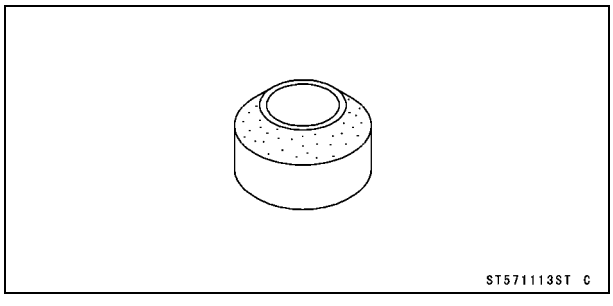

Valve Seat Cutter, 32° - ϕ25:
57001-1118

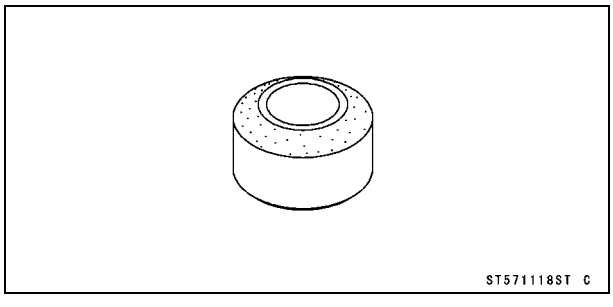

Valve Seat Cutter, 32° - ϕ30:
57001-1120

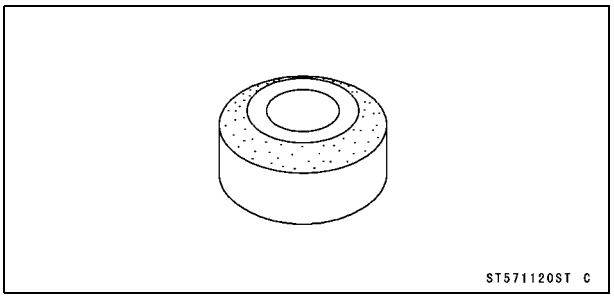

Valve Seat Cutter, 60° - ϕ30:
57001-1123

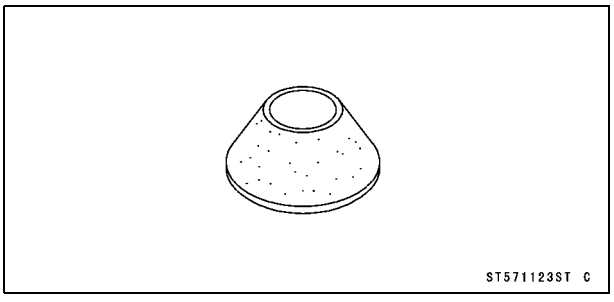

Valve Seat Cutter Holder Bar:
57001-1128

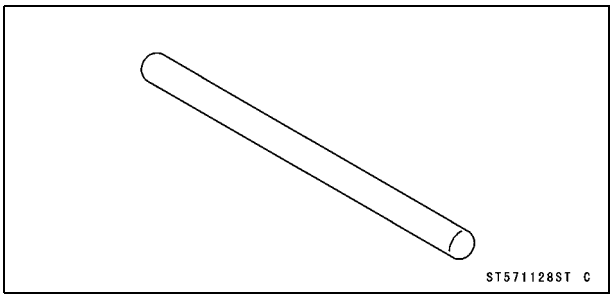

Valve Seat Cutter, 45° - ϕ30:
57001-1187

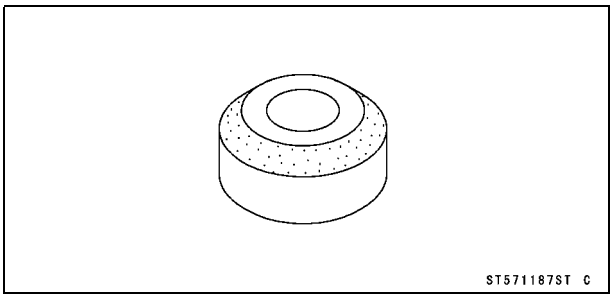

Valve Spring Compressor Adapter, ϕ21:
57001-1272

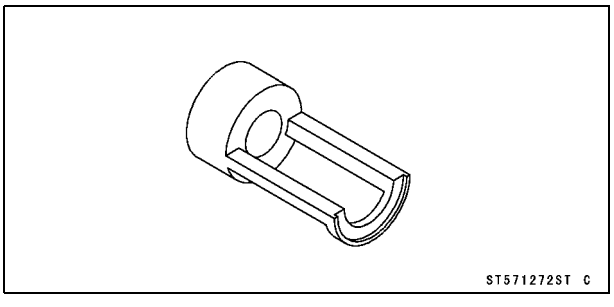

Special Tools and Sealant

Valve Guide Arbor, ϕ4:
57001-1273

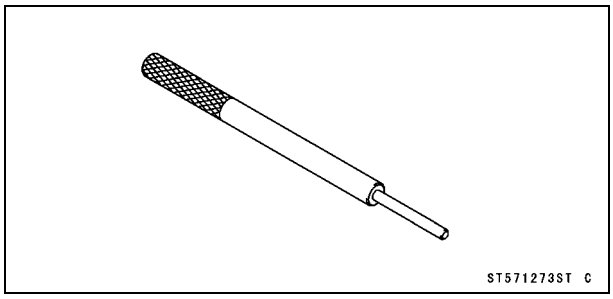

Valve Guide Reamer, ϕ4:
57001-1274

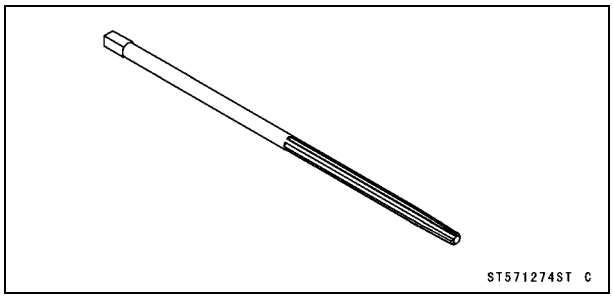

Valve Seat Cutter Holder, ϕ4:
57001-1275

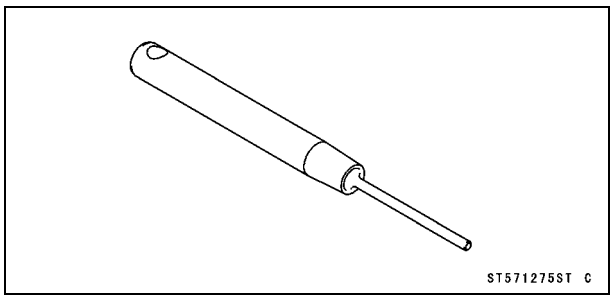

Compression Gauge Adapter, M10 × 1.0:
57001-1317

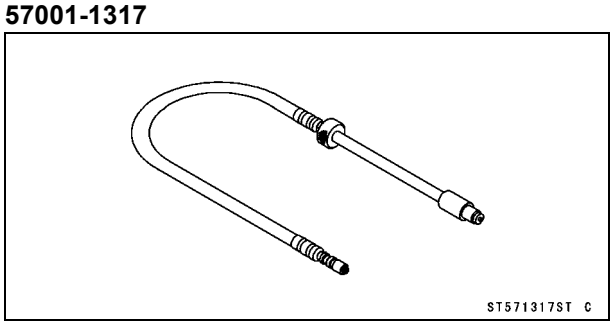

Valve Seat Cutter, 60° - ϕ25:
57001-1328

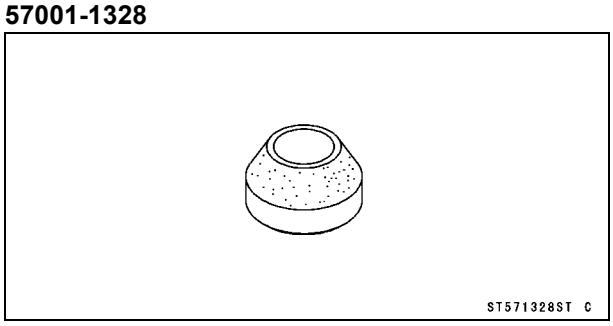

Valve Guide Driver:
57001-1564

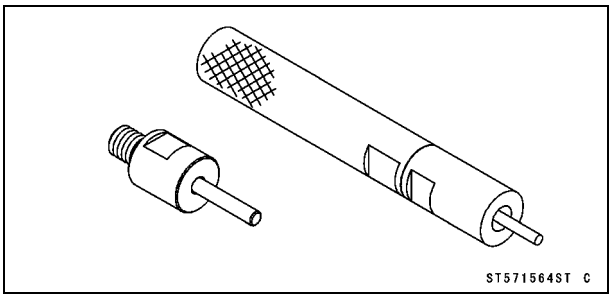

Compression Gauge Adapter, M10 × 1.0:
57001-1601

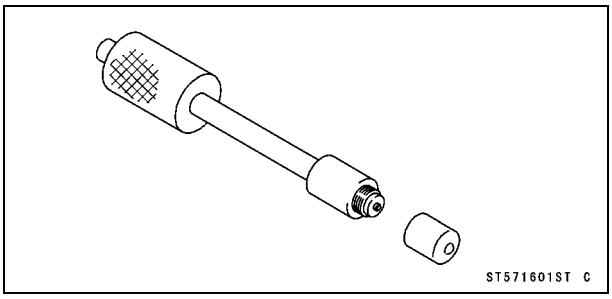

L-Shape Hose:
57001-1606

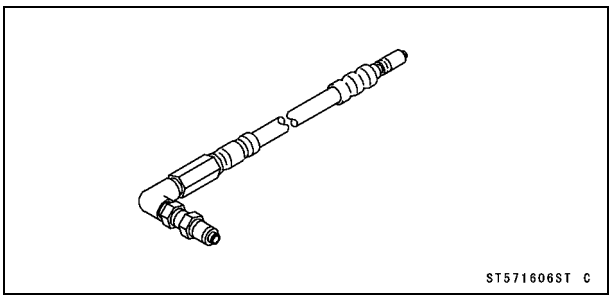

Valve Guide Driver Attachment, C:
57001-1624

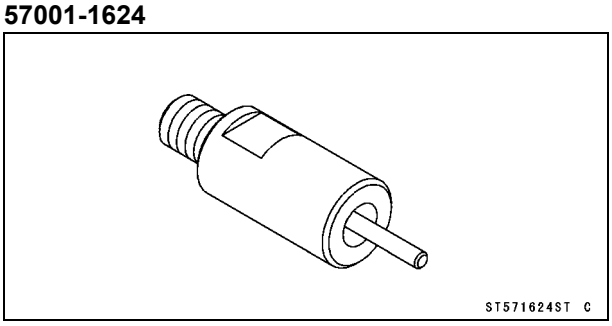

Liquid Gasket, TB1211F:
92104-0004

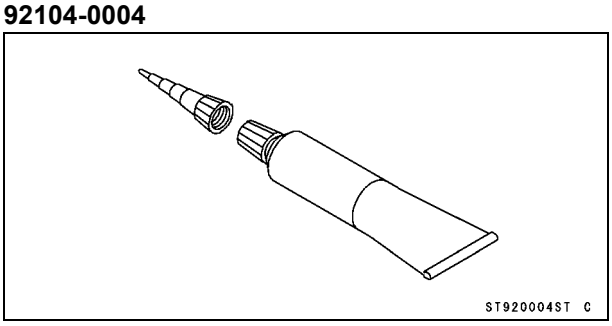

Clean Air System

Air Suction Valve Removal

- Remove:
  Fuel Tank (see Fuel Tank Removal in the Fuel System (DFI) chapter)
  Connector [A] (from Clamp [B])
  Air Suction Valve Cover Bolts [C] and Bracket [D]
  Air Suction Valve Covers [E]
  Air Suction Valves

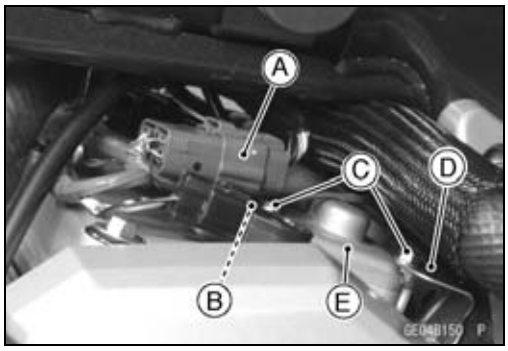

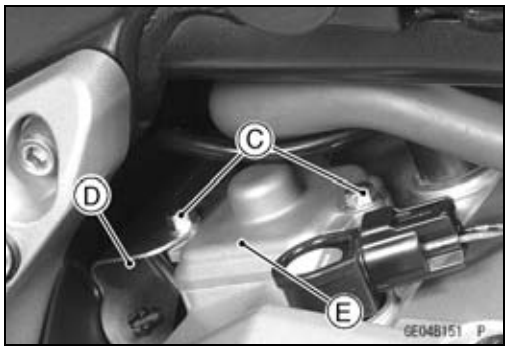

Air Suction Valve Installation

- Install the air suction valve [A] so that its wider side [B] of the reed valve case faces the front.
- Tighten:

  Torque - Air Suction Valve Cover Bolts: 9.8 N·m (1.0 kgf·m, 87 in·lb)
- Install the removed parts (see appropriate chapters).

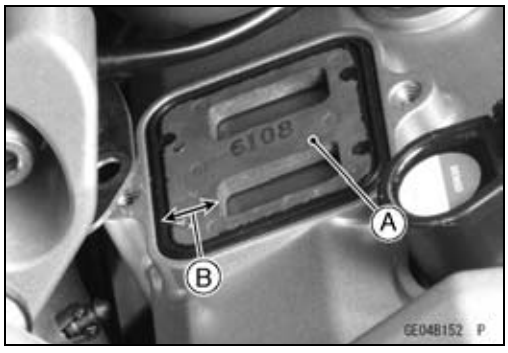

Air Suction Valve Inspection

- Remove the air suction valve (see Air Suction Valve Removal).
- Visually inspect the reeds for cracks, folds, warps, heat damage or other damage.

★If there is any doubt as to the condition of the reeds [A], replace the air suction valve as an assembly.

- Check the reed contact areas [B] of the valve holder for grooves, scratches, any signs of separation from the holder or heat damage.
- If there is any doubt as to the condition of the reed contact areas, replace the air suction valve as an assembly.
- If any carbon or other foreign particles have accumulated between the reed and the reed contact area, wash the valve assembly clean with a high-flash point solvent.

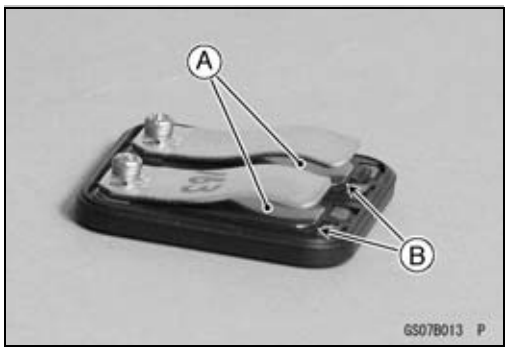

NOTICE

Do not scrape off the deposits with a scraper as this could damage the rubber, requiring replacement of the suction valve assembly.

Clean Air System

Air Switching Valve Removal

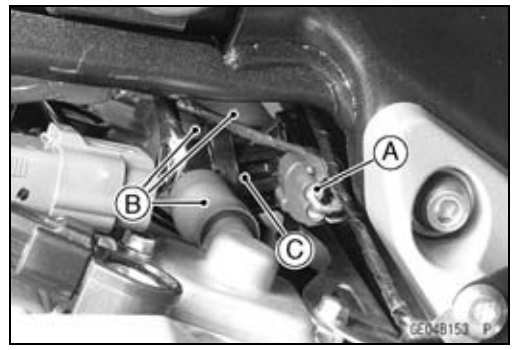

- Remove:
  Fuel Tank (see Fuel Tank Removal in the Fuel System (DFI) chapter)
  Thermostat Housing (see Thermostat Removal in the Cooling System chapter)
  Connector [A] (Disconnect)
- Separate the hoses [B] from the air suction valve covers and air cleaner housing holder, and remove the air switching valve [C].

NOTICE
Never drop the air switching valve, especially on a hardsurface. Such a shock to the air switching valve can damaged it.

Air Switching Valve Installation

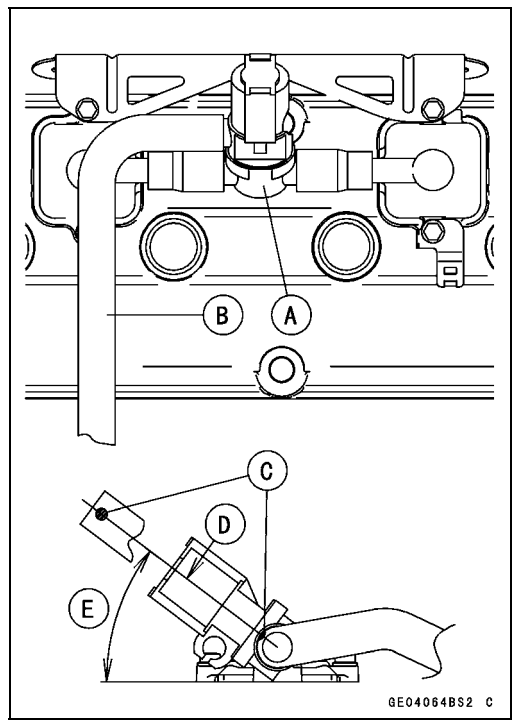

- Install the air switching valve [A] with hose [B] as shown in the figure.

○Align the white mark [C] of the hose and center line [D] of the air switching valve.
30 ~ 40° [E]

Air Switching Valve Operation Test

- Refer to the Air Suction System Damage Inspection in the Periodic Maintenance chapter.

Air Switching Valve Unit Test

- Refer to the Air Switching Valve Unit Test in the Electrical System chapter.

Clean Air System Hose Inspection

- Be certain that all the hoses are routed without being flattened or kinked, and are connected correctly to the air cleaner housing, air switching valve and air suction valve covers.

★If they are not, correct them. Replace them if they are damaged.

Cylinder Head Cover

Cylinder Head Cover Removal

- Remove:
  Fuel Tank (see Fuel Tank Removal in the Fuel System (DFI) chapter)
  Air Switching Valve (see Air Switching Valve Removal)
  Stick Coils (see Stick Coil Removal in the Electrical System chapter)
  Air Suction Valve Covers (see Air Suction Valve Removal)
  Cylinder Head Cover Bolts [A]
  Cylinder Head Cover

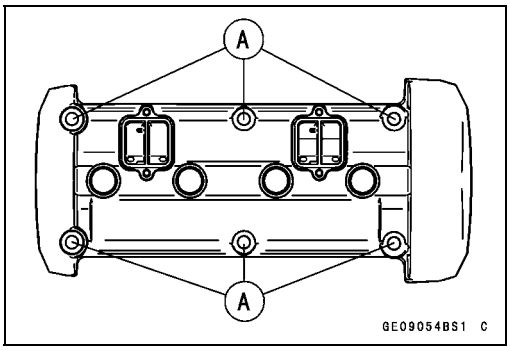

Cylinder Head Cover Installation

- Using a high-flash point solvent, clean off any oil or dirt that may be on the silicone sealant coating area. Dry them with a clean cloth.
- Apply silicone sealant [A] to the cylinder head as shown in the figure.

  Sealant - Liquid Gasket, TB1211F: 92104-0004
- Replace the head cover gasket with a new one.
- Install the new head cover gasket.

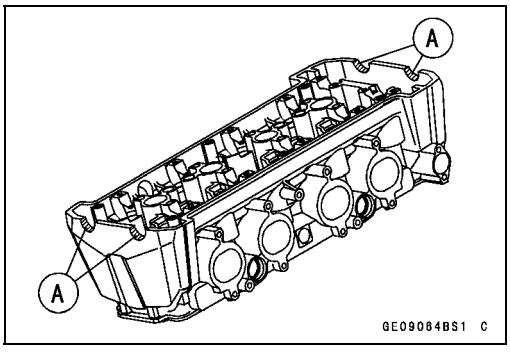

- Install:
  Dowel Pins [A]
  Plug Hole Gaskets [B]

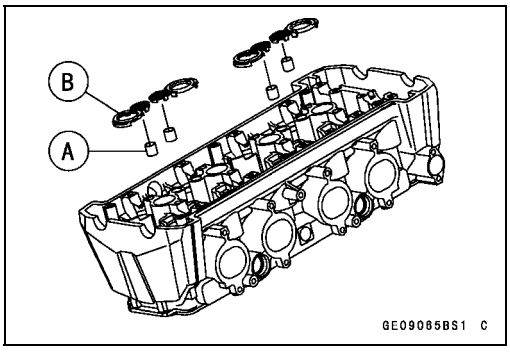

- Install the cylinder head cover.
- Install the washer [A] with the metal side faces upward.

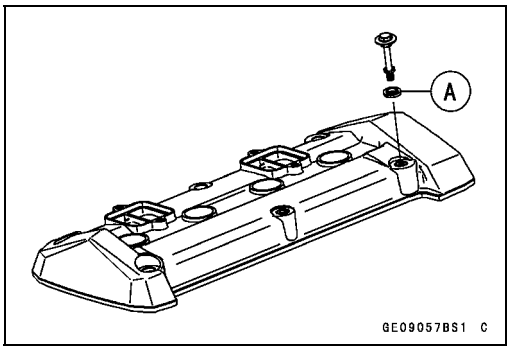

- Tighten the cover bolts following the specified tightening sequence.

  Torque - Cylinder Head Cover Bolts: 9.8 N·m (1.0 kgf·m, 87 in·lb)
- Install the removed parts (see appropriate chapters).

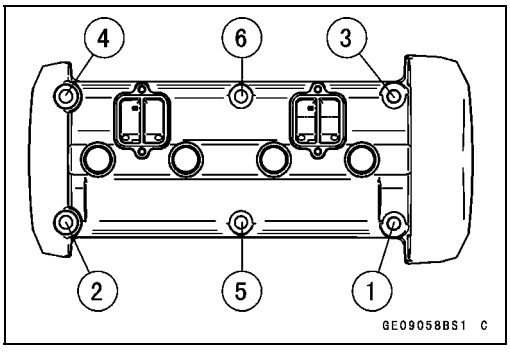

Camshaft Chain Tensioner

Camshaft Chain Tensioner Removal

NOTICE

This is a non-return type camshaft chain tensioner. The push rod does not return to its original position once it moves out to take up camshaft chain slack. Observe all the rules listed below.
When removing the tensioner, do not take out the mounting bolts only halfway. Retightening the mounting bolts from this position could damage the tensioner and the camshaft chain. Once the bolts are loosened, the tensioner must be removed and reset as described in "Camshaft Chain Tensioner Installation".
Do not turn over the crankshaft while the tensioner is removed. This could upset the camshaft chain timing, and damage the valves.

- Remove:
  Cap Bolt [A]
  Washer [B]
  Spring [C]
  Rod [D]
  Mounting Bolts [E]
  Camshaft Chain Tensioner [F]

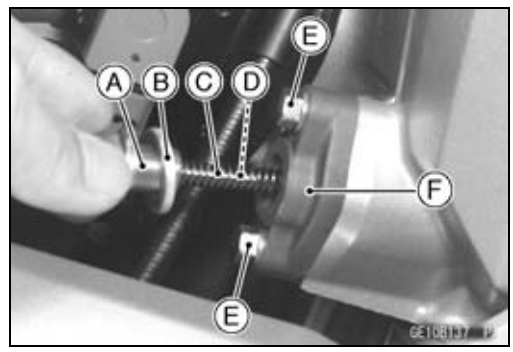

Camshaft Chain Tensioner Installation

- Replace the O-ring [A] with a new one.
- Apply grease to the new O-ring.
- Release the stopper [B] and push the push rod [C] into the tensioner body [D].
- Install the tensioner body so that the stopper faces upward.

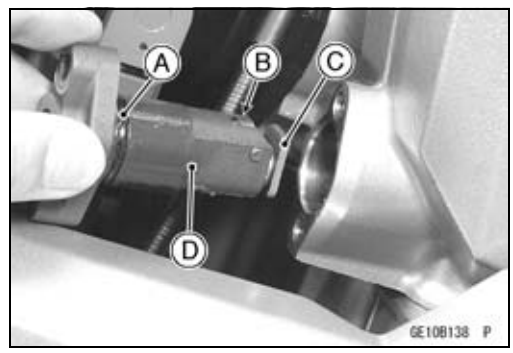

- Tighten the tensioner mounting bolts [A].

  Torque - Camshaft Chain Tensioner Mounting Bolts: 11 N·m (1.1 kgf·m, 97 in·lb)

- Install the rod, spring and washer.
- Tighten the cap bolt [B].

  Torque - Camshaft Chain Tensioner Cap Bolt: 20 N·m (2.0 kgf·m, 15 ft·lb)

- Turn the crankshaft 2 turns clockwise to allow the tensioner to expand and recheck the camshaft chain timing.

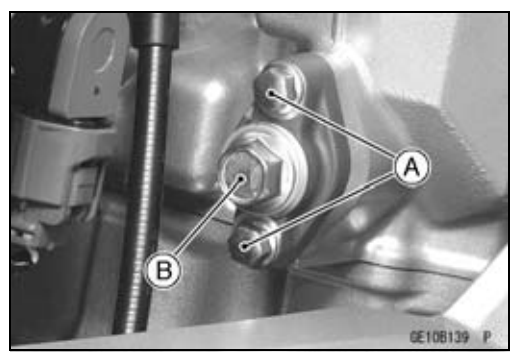

Camshaft, Camshaft Chain

Camshaft Removal

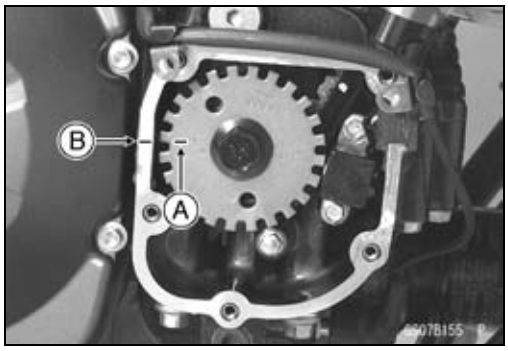

- Remove:
  Cylinder Head Cover (see Cylinder Head Cover Removal)
  Crankshaft Sensor Cover (see Crankshaft Sensor Removal in the Electrical System chapter)
- Position the crankshaft at #1, 4 piston TDC.
  TDC mark [A] for #1, 4 Pistons
  Timing Mark (Crankcase Halves Mating Surface) [B]

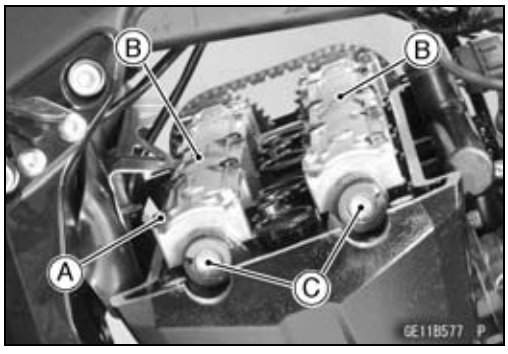

- Remove:
  Camshaft Chain Tensioner (see Camshaft Chain Tensioner Removal)
  Camshaft Cap Bolts [A]
  Camshaft Caps [B]
  Camshafts [C]
- Stuff a clean cloth into the chain tunnel to keep any parts from dropping into the crankcase.

NOTICE

The crankshaft may be turned while the camshafts are removed. Always pull the chain taut while turning the crankshaft. This avoids kinking the chain on the lower (crankshaft) sprocket. A kinked chain could damage both the chain and the sprocket.

Camshaft Installation

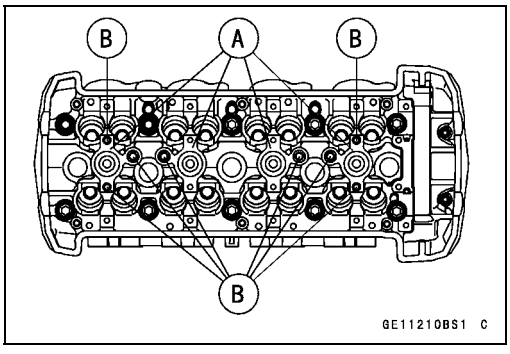

- Be sure to install the following parts.
  Plug Hole Gaskets [A]
  Dowel Pins [B]

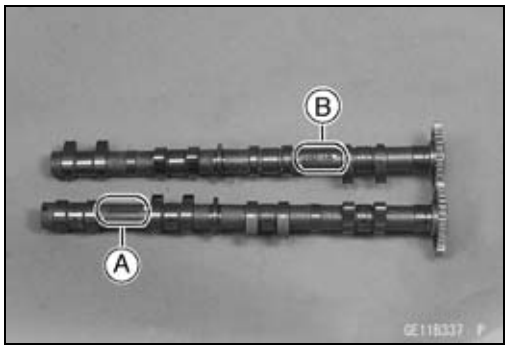

- Apply molybdenum disulfide oil solution to all cam parts and journals.
- If a new camshaft is to be used, apply a thin coat of molybdenum disulfide grease to the cam surfaces.

NOTE

○ *The exhaust camshaft has a 1883 EX mark [A] and the intake camshaft has a 1182 IN mark [B]. Be careful not to mix up these shafts.*

Camshaft, Camshaft Chain

- Position the crankshaft at #1, 4 piston TDC.
- Pull the tension side (exhaust side) [A] of the chain taut to install the chain.
- Engage the camshaft chain with the camshaft sprockets so that the timing marks on the sprockets are positioned as shown in the figure.

○The timing marks of #1, 4T must be aligned with the lower surface of crankcase of rear side [B].

○The timing marks must be aligned with the cylinder head upper surface [C].
EX Mark [D]
IN Mark [E]

- Before installing the camshaft caps, install the camshaft chain tensioner body temporally (see Camshaft Chain Tensioner Installation).

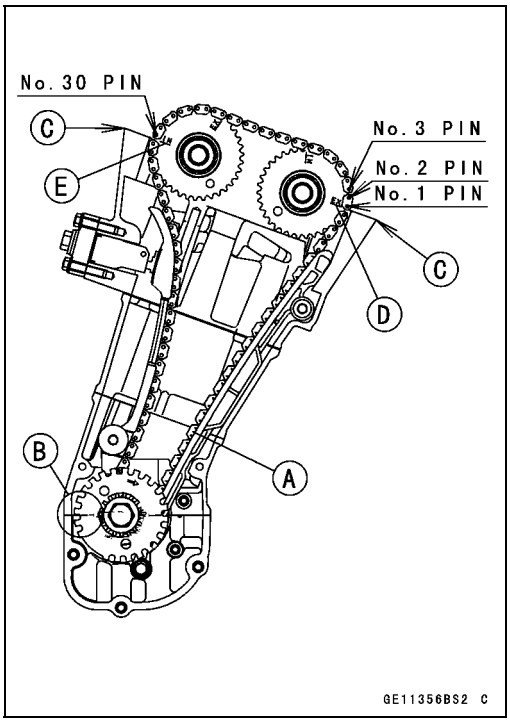

- Install the camshaft caps.
- First tighten the all camshaft cap bolts evenly to seat the camshaft in place, then tighten all bolts following the specified tightening sequence.

Torque - Camshaft Cap Bolts (L = 45 mm) [5, 6, 9, 10]: 12 N·m (1.2 kgf·m, 106 in·lb)
Camshaft Cap Bolts (L = 40 mm) [1 ~ 4, 7, 8, 11 ~ 20]: 12 N·m (1.2 kgf·m, 106 in·lb)

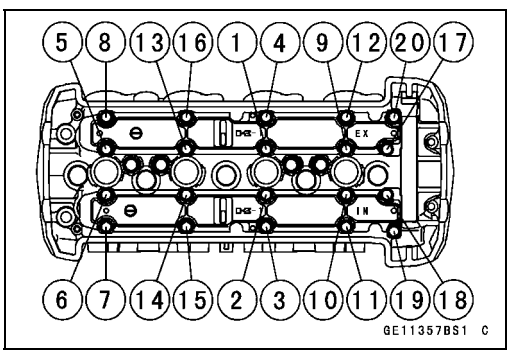

- Install:
  Camshaft Chain Tensioner (see Camshaft Chain Tensioner Installation)
  Cylinder Head Cover (see Cylinder Head Cover Installation)

Camshaft, Camshaft Cap Wear Inspection

- Remove:
  Camshaft Caps (see Camshaft Removal)
- Cut strips of plastigage to journal width. Place a strip on each journal parallel to the camshaft installed in the correct position.
- Measure each clearance between the camshaft journal and the camshaft cap using plastigage (press gauge) [A].
- Tighten the camshaft cap bolts (see Camshaft Installation).

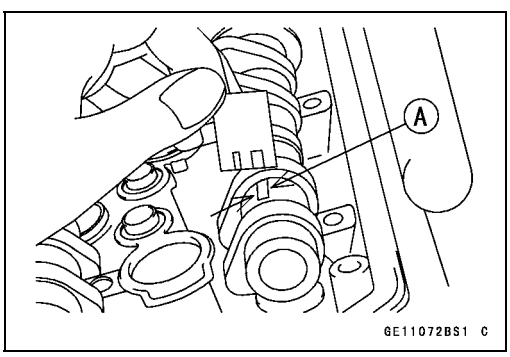

NOTE

○*Do not turn the camshaft when the plastigage is between the journal and camshaft cap.*

Camshaft Journal, Camshaft Cap Clearance

Standard:	**0.028 ~ 0.071 mm (0.0011 ~ 0.0028 in.)**
Service Limit:	**0.16 mm (0.0063 in.)**

Camshaft, Camshaft Chain

★If any clearance exceeds the service limit, measure the diameter of each camshaft journal with a micrometer.

Camshaft Journal Diameter

Standard:	**23.950 ~ 23.972 mm (0.9429 ~ 0.9438 in.)**
Service Limit:	**23.92 mm (0.942 in.)**

★If the camshaft journal diameter is less than the service limit, replace the camshaft with a new one and measure the clearance again.
★If the clearance still remains out of the limit, replace the cylinder head unit.

Camshaft Runout Inspection

- Remove the camshafts (see Camshaft Removal).
- Set the camshaft in a camshaft alignment jig or on V blocks.
- Measure runout with a dial gauge at the specified place as shown in the figure.

★If the runout exceeds the service limit, replace the shaft.

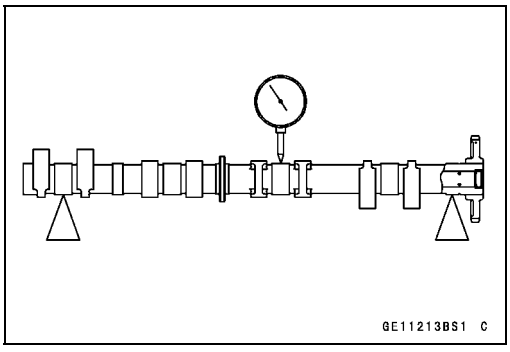

Camshaft Runout

Standard:	**TIR 0.02 mm (0.0008 in.) or less**
Service Limit:	**TIR 0.1 mm (0.004 in.)**

Cam Wear Inspection

- Remove the camshafts (see Camshaft Removal).
- Measure the height [A] of each cam with a micrometer.

★If the cams are worn down past the service limit, replace the camshaft.

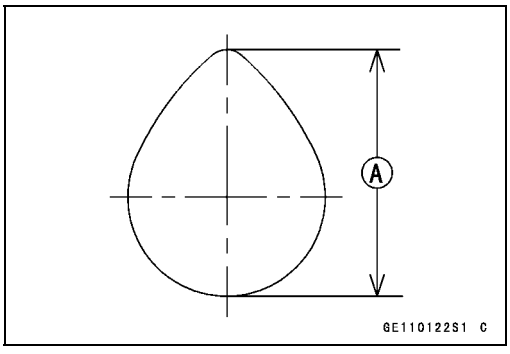

Cam Height

Standard:	
Exhaust	**35.742 ~ 35.858 mm (1.4072 ~ 1.4117 in.)**
Intake	**35.942 ~ 36.058 mm (1.4150 ~ 1.4196 in.)**
Service Limit:	
Exhaust	**35.64 mm (1.403 in.)**
Intake	**35.84 mm (1.411 in.)**

Camshaft Chain Removal

- Split the crankcase (see Crankcase Splitting in the Crankshaft/Transmission chapter).
- Remove the camshaft chain [A] from the crankshaft sprocket.

Cylinder Head

Cylinder Compression Measurement

NOTE

○*Use the battery which is fully charged.*

- Warm up the engine thoroughly.
- Stop the engine.
- Remove:
  Fuel Tank (see Fuel Tank Removal in the Fuel System (DFI) chapter)
  Stick Coils (see Stick Coil Removal in the Electrical System chapter)
  Spark Plugs (see Spark Plug Replacement in the Periodic Maintenance chapter)

- Attach the compression gauge [A] and adapter [B] firmly into the spark plug hole.

○Using the starter motor, turn the engine over with the throttle fully open until the compression gauge stops rising; the compression is the highest reading obtainable.

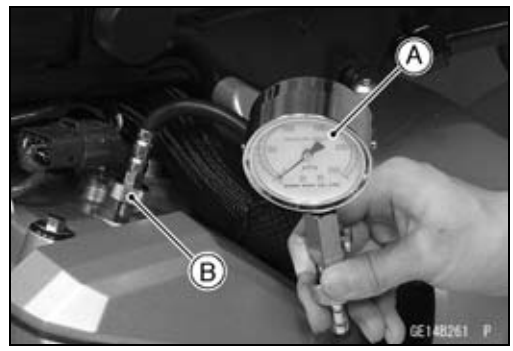

Special Tools - Compression Gauge, 20 kgf/cm²: 57001-221
Compression Gauge Adapter, M10 × 1.0: 57001-1317
Compression Gauge Adapter, M10 × 1.0: 57001-1601
L-Shape Hose: 57001-1606

Cylinder Compression
Usable Range: 945 ~ 1 350 kPa (9.6 ~ 13.8 kgf/cm², 137 ~ 196 psi) at 265 r/min (rpm)

- Repeat the measurement for the other cylinders.
- Install the spark plugs.

Torque - Spark Plugs: 13 N·m (1.3 kgf·m, 115 in·lb)

○The following table should be consulted if the obtainable compression reading is not within the usable range.

Problem	Diagnosis	Remedy (Action)
Cylinder compression is higher than usable range	Carbon accumulation on piston and in combustion chamber possibly due to damaged valve stem oil seal and/or damaged piston oil rings (This may be indicated by white exhaust smoke).	Remove the carbon deposits and replace damaged parts if necessary.
	Incorrect cylinder head gasket thickness	Replace the gasket with a standard part.
Cylinder compression is lower than usable range	Gas leakage around cylinder head	Replace damaged check gasket and cylinder head warp.
	Bad condition of valve seating	Repair if necessary.
	Incorrect valve clearance	Adjust the valve clearance.
	Incorrect piston/cylinder clearance	Replace the piston and/or cylinder.
	Piston seizure	Inspect the cylinder and replace/repair the cylinder and/or piston as necessary.
	Bad condition of piston ring and/or piston ring grooves.	Replace the piston and/or the piston rings.

Cylinder Head

Cylinder Head Removal

- Remove:
  Coolant (Drain, see Coolant Change in the Periodic Maintenance chapter)
  Cylinder Head Cover (see Cylinder Head Cover Removal)
  Camshafts (see Camshaft Removal)
  Throttle Body Assy (see Throttle Body Assy Removal in the Fuel System (DFI) chapter)
  Exhaust Pipe (see Exhaust Pipe Removal)

- Drain the coolant from the cylinder.
- Place a container under the drain bolt [A] and remove it.
- Tighten the drain bolt with gasket.

★Replace the drain bolt gasket with a new one if it is damaged.

Torque - Coolant Drain Bolt (Cylinder): 9.8 N·m (1.0 kgf·m, 87 in·lb)

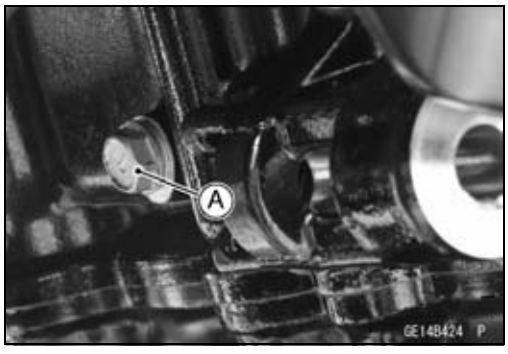

- Remove:
  Crankshaft Sensor (see Crankshaft Sensor Removal in the Electrical System chapter)
  Camshaft Position Sensor (see Camshaft Position Sensor Removal in the Electrical System chapter)
  Front Camshaft Chain Guide Bolts [A]
  Front Camshaft Chain Guide [B]
  Rear Camshaft Chain Guide Bolt [C]
  Rear Camshaft Chain Guide [D]

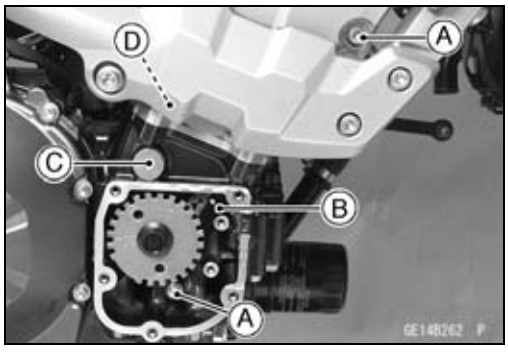

- Remove:
  M6 Cylinder Head Bolts [A]
  M10 Cylinder Head Bolts [B]
  Cylinder Head

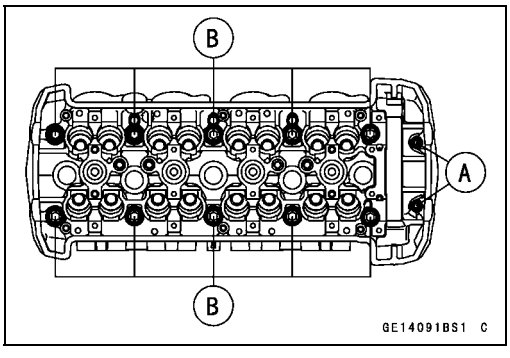

Cylinder Head Installation

NOTE

○*The camshaft cap is machined with the cylinder head, so if a new cylinder head is installed, use the cap that is supplied with the new head.*

- Install a new cylinder head gasket and dowel pins.
- Apply molybdenum disulfide oil solution to both sides [A] of the cylinder head bolt washers [B].

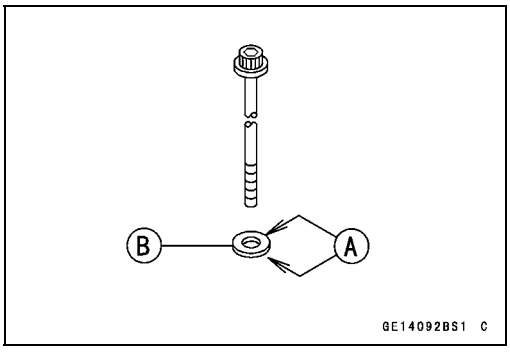

Cylinder Head

- Tighten the M10 cylinder head bolts following the tightening sequence [1 ~ 10].

Torque - Cylinder Head Bolts (M10):

First		**20 N·m (2.0 kgf·m, 15 ft·lb)**
Final	**Used Bolts**	**49 N·m (5.0 kgf·m, 36 ft·lb)**
	New Bolts	**54 N·m (5.5 kgf·m, 40 ft·lb)**

- Tighten the M6 cylinder head bolts [11 ~ 12].

Torque - Cylinder Head Bolts (M6): 12 N·m (1.2 kgf·m, 106 in·lb)

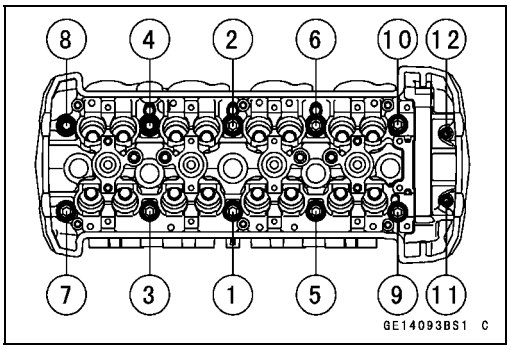

- Install:
  Front Camshaft Chain Guide [A]
  Rear Camshaft Chain Guide [B]
  New O-rings [C]
  Collar [D]

○Apply grease to the new O-ring.

- Tighten:

Torque - Front Camshaft Chain Guide Bolt (Upper) [E]: 25 N·m (2.5 kgf·m, 18 ft·lb)
Front Camshaft Chain Guide Bolt (Lower) [F]: 12 N·m (1.2 kgf·m, 106 in·lb)
Rear Camshaft Chain Guide Bolt [G]: 25 N·m (2.5 kgf·m, 18 ft·lb)

- Install the removed parts (see appropriate chapters).

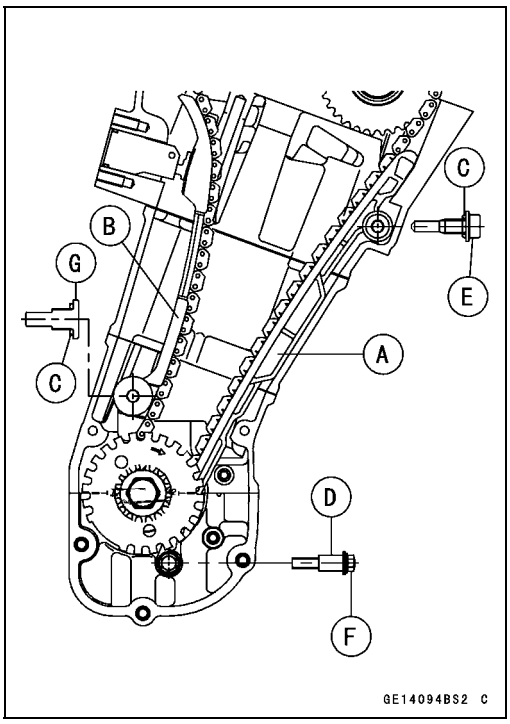

Cylinder Head Warp Inspection

- Clean the cylinder head.
- Lay a straightedge across the lower surface of the cylinder head at several positions.
- Use a thickness gauge [A] to measure the space between the straightedge [B] and the head.

Cylinder Head Warp
Standard: – – –
Service Limit: 0.05 mm (0.002 in.)

★If the cylinder head is warped more than the service limit, replace it.

★If the cylinder head is warped less than the service limit, repair the head by rubbing the lower surface on emery paper secured to a surface plate (first No. 200, then No. 400).

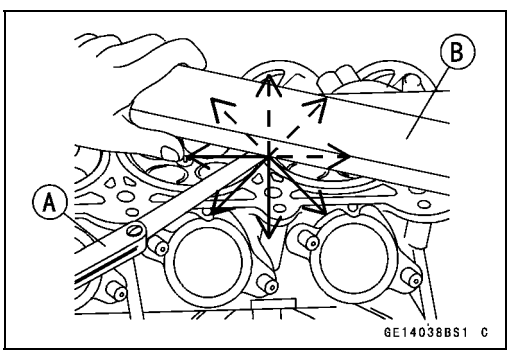

Valves

Valve Clearance Inspection

- Refer to the Valve Clearance Inspection in the Periodic Maintenance chapter.

Valve Clearance Adjustment

- Refer to the Valve Clearance Adjustment in the Periodic Maintenance chapter.

Valve Removal

- Remove:
  Cylinder Head (see Cylinder Head Removal)
  Valve Lifter and Shim

○Mark and record the valve lifter and shim locations so they can be installed in their original positions.

- Using the valve spring compressor assembly, remove the valve.

Special Tools - Valve Spring Compressor Assembly [A]: 57001-241
Valve Spring Compressor Adapter, ϕ21 [B]: 57001-1272

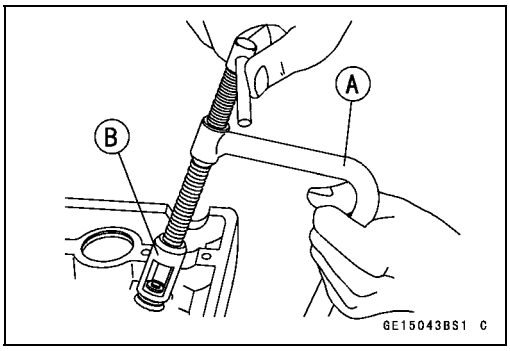

Valve Installation

- Replace the oil seal with a new one.
- Apply a thin coat of molybdenum disulfide grease to the valve stem before valve installation.
- Install the springs so that the closed coil end faces downwards.
  Valve Stem [A]
  Oil Seal [B]
  Spring Seat [C]
  Closed Coil End [D]
  Valve Spring (White) [E]
  Retainer [F]
  Split Keepers [G]

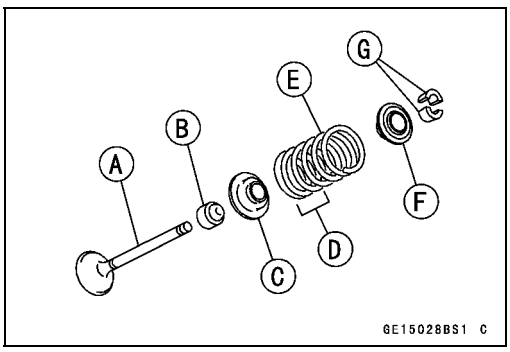

Valve Guide Removal

- Remove:
  Valve (see Valve Removal)
  Oil Seal
  Spring Seat
- Heat the area around the valve guide to 120 ~ 150°C (248 ~ 302°F), and hammer lightly on the valve guide arbor [A] to remove the guide from the top of the head.

NOTICE
Do not heat the cylinder head with a torch. This will warp the cylinder head. Soak the cylinder head in oil and heat the oil.

Special Tool - Valve Guide Arbor, ϕ4: 57001-1273

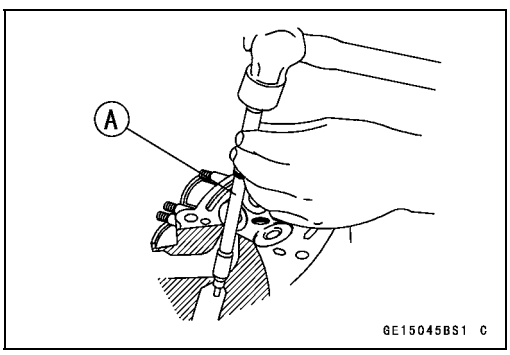

Valves

Valve Guide Installation

- Apply engine oil to the valve guide outer surface before installation.
- Heat the area around the valve guide hole to about 120 ~ 150°C (248 ~ 302°F).

NOTICE

Do not heat the cylinder head with a torch. This will warp the cylinder head. Soak the cylinder head and heat the oil.

- Using the valve guide driver [A] and attachment [B], press and insert the valve guide in until the attachment surface [C] touches the head surface.
  13.3 ~ 13.5 mm (0.52 ~ 0.53 in.) [D]

Special Tools - Valve Guide Driver: 57001-1564
Valve Guide Driver Attachment, C: 57001-1624

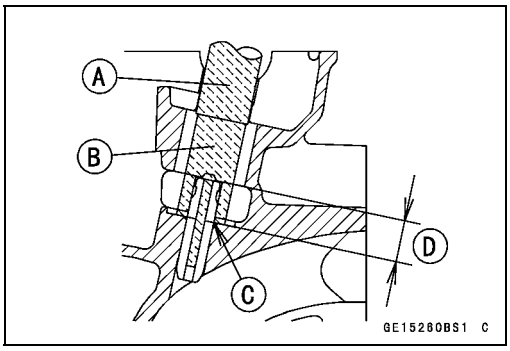

- Wait until the cylinder head cools down and then ream the valve guide with the valve guide reamer [A] even if the old guide is reused.

○Turn the reamer in a clockwise direction until the reamer turns freely in the guide. Never turn the reamer counter-clockwise or it will be dulled.

○Once the guides are reamed they must be cleaned thoroughly.

Special Tool - Valve Guide Reamer, ϕ4: 57001-1274

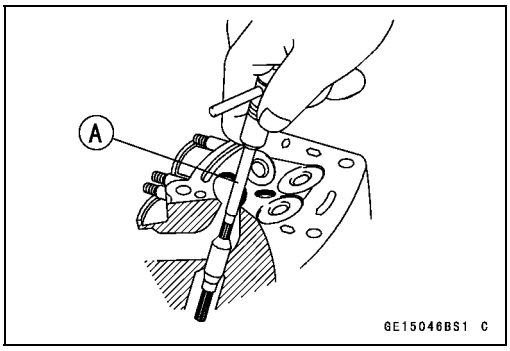

Valves

Valve-to-Guide Clearance Measurement (Wobble Method)

If a small bore gauge is not available, inspect the valve guide wear by measuring the valve to valve guide clearance with the wobble method as indicated below.

- Insert a new valve [A] into the guide [B] and set a dial gauge against the stem perpendicular to it as close as possible to the cylinder head mating surface.
- Move the stem back and forth [C] to measure valve/valve guide clearance.
- Repeat the measurement in a direction at a right angle to the first.

★If the reading exceeds the service limit, replace the guide.

NOTE

○*The reading is not actual valve/valve guide clearance because the measuring point is above the guide.*

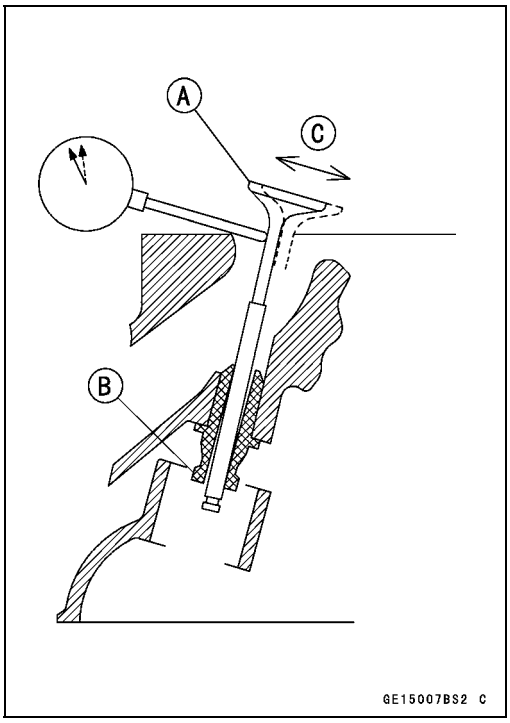

Valve/Valve Guide Clearance (Wobble Method)

Standard:

Exhaust	**0.09 ~ 0.17 mm (0.0035 ~ 0.0067 in.)**
Intake	**0.03 ~ 0.11 mm (0.0012 ~ 0.0043 in.)**

Service Limit:

Exhaust	**0.37 mm (0.016 in.)**
Intake	**0.32 mm (0.013 in.)**

Valve Seat Inspection

- Remove the valve (see Valve Removal).
- Check the valve seating surface [A] between the valve [B] and valve seat [C].

○Measure the outside diameter [D] of the seating pattern on the valve seat.

★If the outside diameter is too large or too small, repair the seat (see Seat Repair).

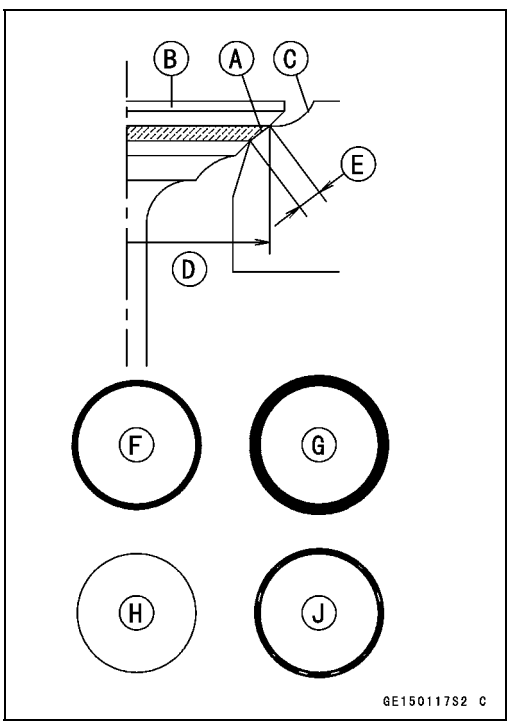

Valve Seating Surface Outside Diameter

Standard:

Exhaust	**21.6 ~ 21.8 mm (0.850 ~ 0.858 in.)**
Intake	**26.4 ~ 26.6 mm (1.039 ~ 1.047 in.)**

○Measure the seat width [E] of the portion where there is no build-up carbon (white portion) of the valve seat with a vernier caliper.

Good [F]

★If the width is too wide [G], too narrow [H] or uneven [J], repair the seat (see Valve Seat Repair).

Valve Seating Surface Width

Standard:

Exhaust	**0.5 ~ 1.0 mm (0.020 ~ 0.039 in.)**
Intake	**0.5 ~ 1.0 mm (0.020 ~ 0.039 in.)**

Valves

Valve Seat Repair

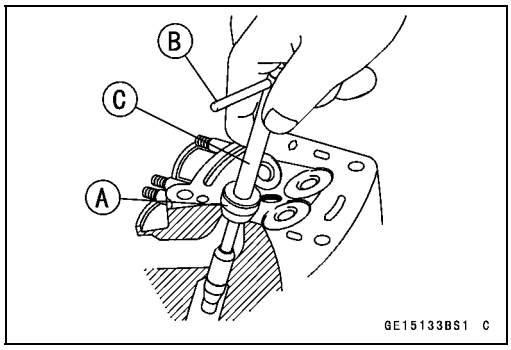

● Repair the valve seat with the valve seat cutters [A].

Special Tools - Valve Seat Cutter Holder Bar [B]: 57001-1128
Valve Seat Cutter Holder, ϕ4 [C]: 57001-1275

[For Exhaust Valve Seat]
Valve Seat Cutter, 45° - ϕ24.5: 57001-1113
Valve Seat Cutter, 32° - ϕ25: 57001-1118
Valve Seat Cutter, 60° - ϕ25: 57001-1328

[For Intake Valve Seat]
Valve Seat Cutter, 45° - ϕ30: 57001-1187
Valve Seat Cutter, 32° - ϕ30: 57001-1120
Valve Seat Cutter, 60° - ϕ30: 57001-1123

★If the manufacturer's instructions are not available, use the following procedure.

Seat Cutter Operation Care

1. This valve seat cutter is developed to grind the valve for repair. Therefore the cutter must not be used for other purposes than seat repair.
2. Do not drop or shock the valve seat cutter, or the diamond particles may fall off.
3. Do not fail to apply engine oil to the valve seat cutter before grinding the seat surface. Also wash off ground particles sticking to the cutter with washing oil.

NOTE

○*Do not use a wire brush to remove the metal particles from the cutter. It will take off the diamond particles.*

4. Setting the valve seat cutter holder in position, operate the cutter in one hand. Do not apply too much force to the diamond portion.

NOTE

○*Prior to grinding, apply engine oil to the cutter and during the operation, wash off any ground particles sticking to the cutter with washing oil.*

5. After use, wash it with washing oil and apply thin layer of engine oil before storing.

Marks Stamped on the Cutter

The marks stamped on the back of the cutter [A] represent the following.

60° ..... Cutter angle [B]
37.5ϕ ..... Outer diameter of cutter [C]

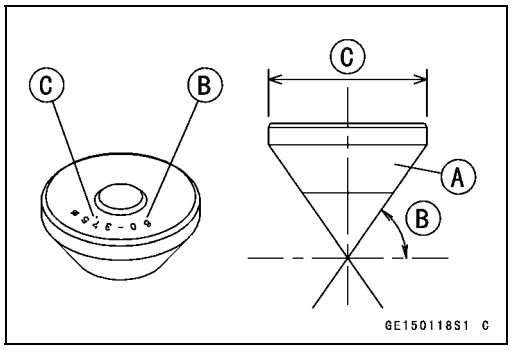

Valves

Operating Procedures

- Clean the seat area carefully.
- Coat the seat with machinist's dye.
- Fit a 45° cutter into the holder and slide it into the valve guide.
- Press down lightly on the handle and turn it right or left. Grind the seating surface only until it is smooth.

NOTICE

Do not grind the seat too much. Overgrinding will reduce valve clearance by sinking the valve into the head. If the valve sinks too far into the head, it will be impossible to adjust the clearance, and the cylinder head must be replaced.

- Measure the outside diameter of the seating surface with a vernier caliper.

★If the outside diameter of the seating surface is too small, repeat the 45° grind until the diameter is within the specified range.

Widened Width [A] of engagement by machining with 45° cutter
Ground Volume [B] by 32° cutter
32° [C]
Correct Width [D]
Ground Volume [E] by 60° cutter
60° [F]

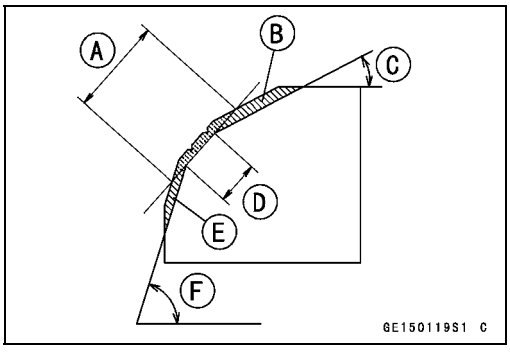

- Measure the outside diameter of the seating surface with a vernier caliper.

★If the outside diameter of the seating surface is too small, repeat the 45° grind [A] until the diameter is within the specified range.

Original Seating Surface [B]

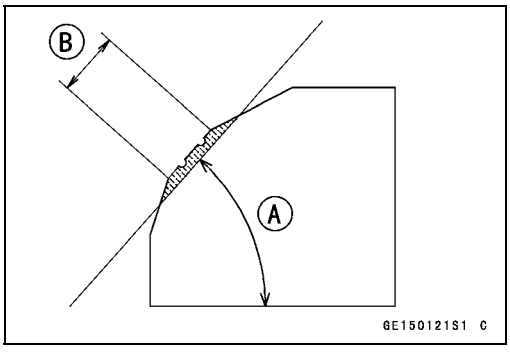

NOTE

○*Remove all pittings of flaws from 45° ground surface.*
○*After grinding with 45° cutter, apply thin coat of machinist's dye to seating surface. This makes seating surface distinct and 32° and 60° grinding operation easier.*
○*When the valve guide is replaced, be sure to grind with 45° cutter for centering and good contact.*

Valves

★If the outside diameter [A] of the seating surface is too large, make the 32° grind described below.
★If the outside diameter of the seating surface is within the specified range, measure the seat width as described below.
● Grind the seat at a 32° angle [B] until the seat outside diameter is within the specified range.
○To make the 32° grind, fit a 32° cutter into the holder, and slide it into the valve guide.
○Turn the holder one turn at a time while pressing down very lightly. Check the seat after each turn.

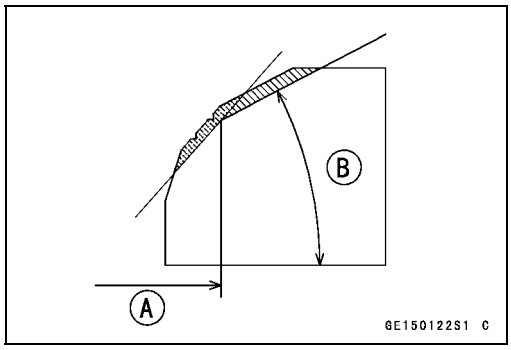

NOTICE

The 32° cutter removes material very quickly. Check the seat outside diameter frequently to prevent overgrinding.

○After making the 32° grind, return to the seat outside diameter measurement step above.
● To measure the seat width, use a vernier caliper to measure the width of the 45° angle portion of the seat at several places around the seat.
★If the seat width is too narrow, repeat the 45° grind until the seat is slightly too wide, and then return to the seat outside diameter measurement step above.

★If the seat width is too wide, make the 60° [A] grind described below.
★If the seat width is within the specified range, lap the valve to the seat as described below.
● Grind the seat at a 60° angle until the seat width is within the specified range.
○To make the 60° grind, fit 60° cutter into the holder, and slide it into the valve guide.
○Turn the holder, while pressing down lightly.
○After making the 60° grind, return to the seat width measurement step above.

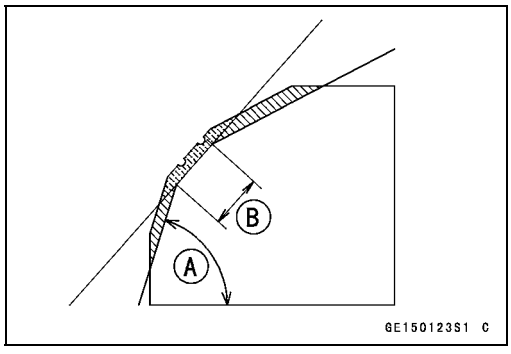

Correct Width [B]

Valves

- Lap the valve to the seat, once the seat width and outside diameter are within the ranges specified above.

○Put a little coarse grinding compound on the face of the valve in a number of places around the valve head.

○Spin the valve against the seat until the grinding compound produces a smooth, matched surface on both the seat and the valve.

○Repeat the process with a fine grinding compound.

Lapper [A]
Valve Seat [B]
Valve [C]

- The seating area should be marked about in the middle of the valve face.

★If the seat area is not in the right place on the valve, check to be sure the valve is the correct part. If it is, it may have been refaced too much; replace it.

- Be sure to remove all grinding compound before assembly.
- When the engine is assembled, be sure to adjust the valve clearance (see Valve Clearance Inspection in the Periodic Maintenance chapter).

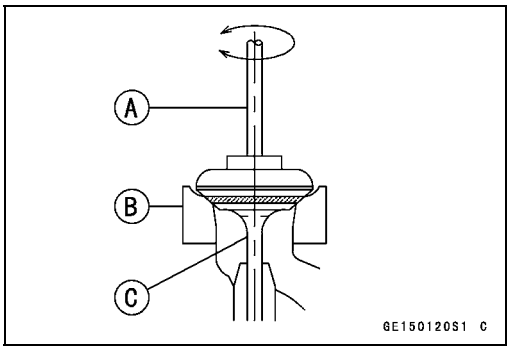

Valves

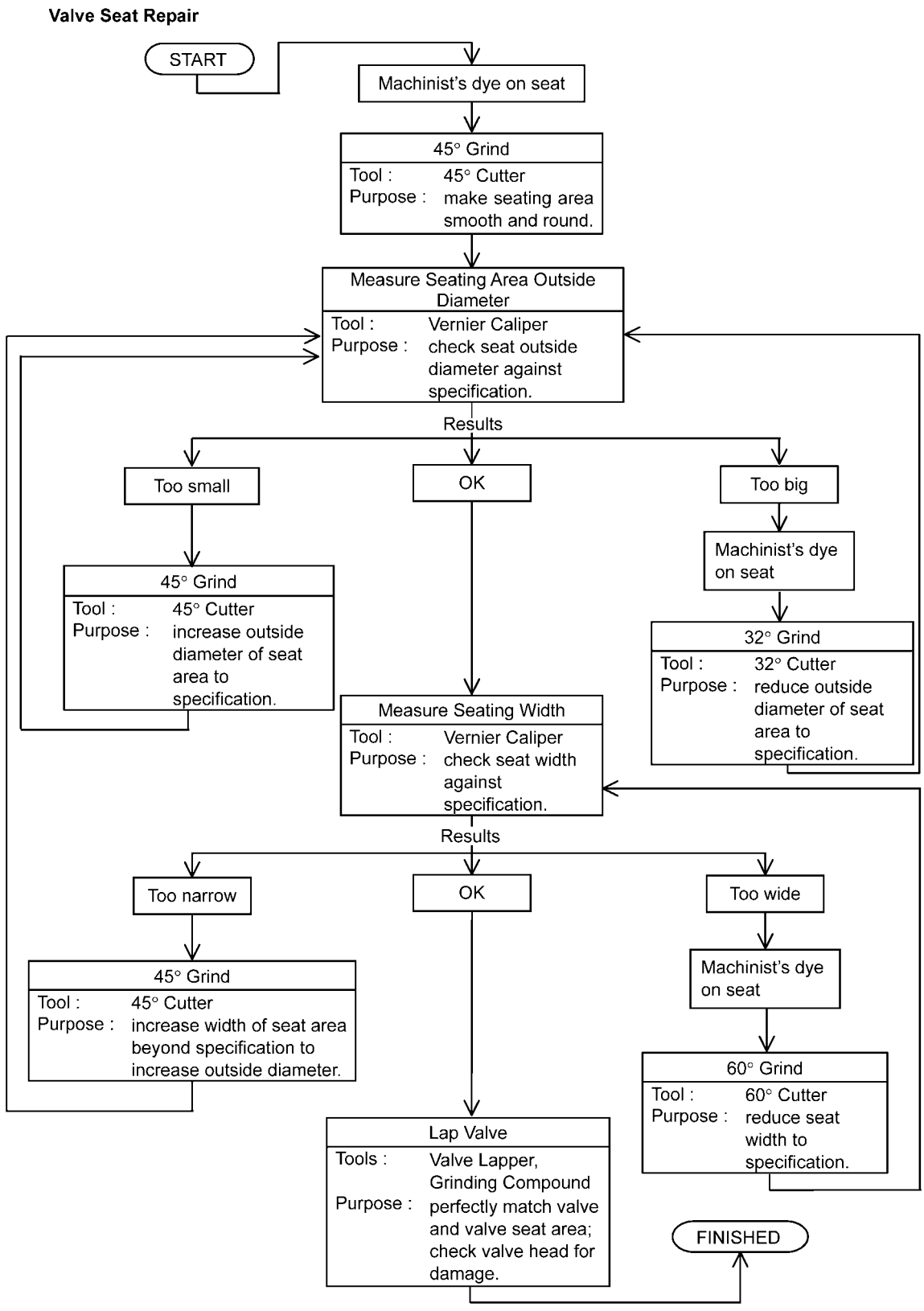
Valve Seat Repair
START
Machinist's dye on seat
45° Grind
Tool : 45° Cutter
Purpose : make seating area smooth and round.
Measure Seating Area Outside Diameter
Tool : Vernier Caliper
Purpose : check seat outside diameter against specification.
Results
Too small
OK
Too big
45° Grind
Tool : 45° Cutter
Purpose : increase outside diameter of seat area to specification.
Machinist's dye on seat
32° Grind
Tool : 32° Cutter
Purpose : reduce outside diameter of seat area to specification.
Measure Seating Width
Tool : Vernier Caliper
Purpose : check seat width against specification.
Results
Too narrow
OK
Too wide
45° Grind
Tool : 45° Cutter
Purpose : increase width of seat area beyond specification to increase outside diameter.
Machinist's dye on seat
60° Grind
Tool : 60° Cutter
Purpose : reduce seat width to specification.
Lap Valve
Tools : Valve Lapper, Grinding Compound
Purpose : perfectly match valve and valve seat area; check valve head for damage.
FINISHED
GE15143B F

Cylinder, Pistons

Cylinder Removal

- Remove:
  Cylinder Head (see Cylinder Head Removal)
  Subframe [A] (see Engine Removal in the Engine Removal/Installation chapter)

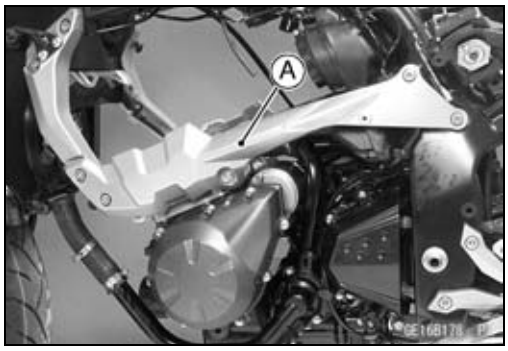

- Remove:
  Water Hose Clamp Screw (Loosen) [A]
  Water Hose [B]
  Cylinder [C]

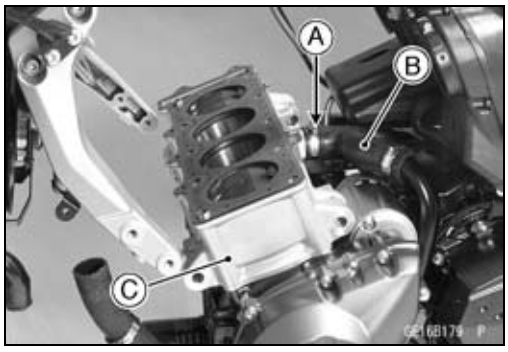

Cylinder Installation

NOTE

○*If a new cylinder is used, use new piston ring.*

- Install the dowel pins [A] and new cylinder gasket [B].
- Apply molybdenum disulfide oil solution to the cylinder bore.

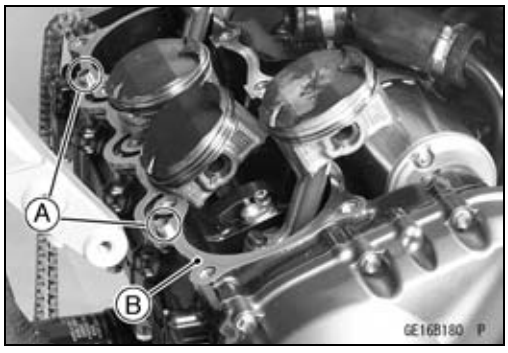

- The piston ring openings must be positioned as shown in the figure. The openings of the oil ring steel rails must be about 30 ~ 40° of angle from the opening of the top ring.
  Top Ring [A]
  Second Ring [B]
  Upper Oil Ring Steel Rail [C]
  Oil Ring Expander [D]
  Lower Oil Ring Steel Rail [E]
  Dent [F]
  30 ~ 40° [G]

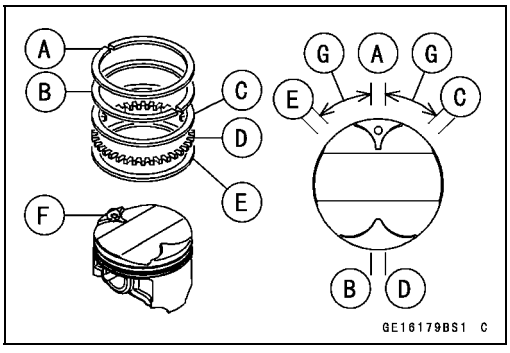

- Position the crankshaft at #2, 3 piston TDC.
- Prepare two auxiliary head bolts with their head cut.

○Install the two cylinder head bolts [A] diagonally in the crankcase.

- Install the cylinder block [B].
  Pistons [C]

○First insert the #2, 3 pistons, and then rotate the crankshaft at 90° angle.

○Insert the piston rings with your thumbs or the thin (–) screwdriver.

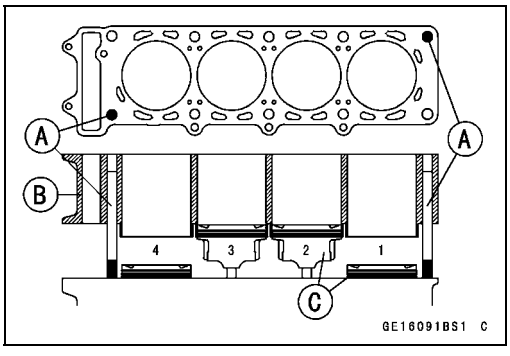

Cylinder, Pistons

Piston Removal

- Remove the cylinder (see Cylinder Removal).
- Place a clean cloth under the pistons and remove the piston pin snap ring [A] from the outside of each piston.

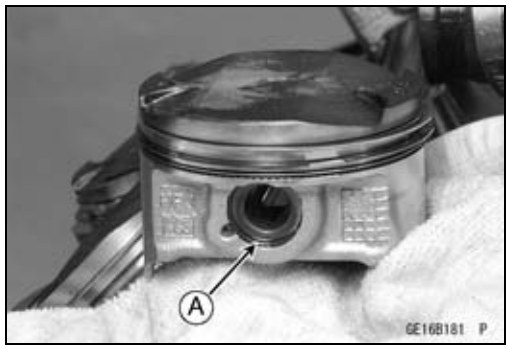

- Remove the piston pins.

  Special Tool - Piston Pin Puller Assembly [A]: 57001-910
- Remove the pistons.

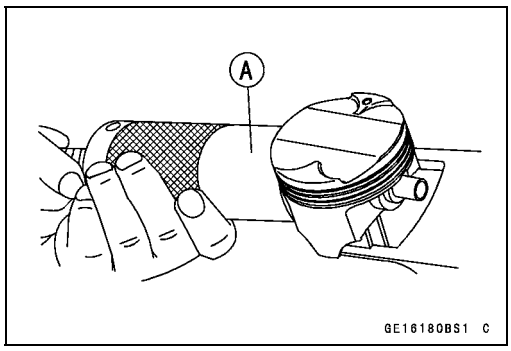

- Carefully spread the ring opening with your thumbs and then push up on the opposite side of the ring [A] to remove it.
- Remove the 3-piece oil ring with your thumbs in the same manner.

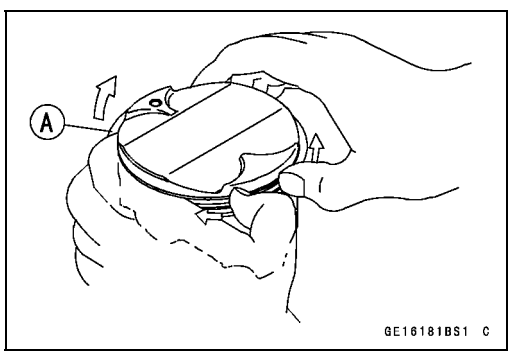

Piston Installation

- Apply molybdenum disulfide oil solution to the oil ring expander, and install the oil ring expander [A] in the bottom piston ring groove so the ends [B] not butt together.
- Apply molybdenum disulfide oil solution to the oil ring steel rails, and install the oil ring steel rails, one above the expander and one below it.

○Spread the rail with your thumbs, but only enough to fit the rail over the piston.

○Release the rail into the bottom piston ring groove.

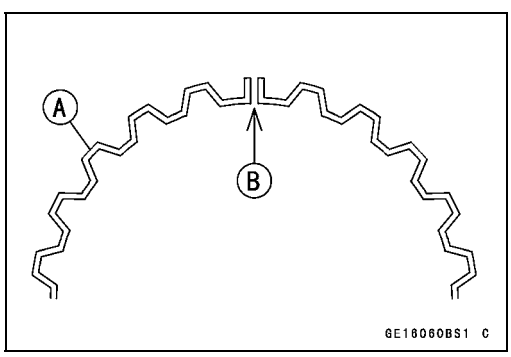

NOTE

○*The oil ring rails have no “top” or “bottom”.*

- Do not mix up the top and second ring.
- Install the top ring [A] so that the “1T” mark [B] faces up.
- Install the second ring [C] so that the “2T” mark [D] faces up.

○Apply molybdenum disulfide oil solution to the piston rings.

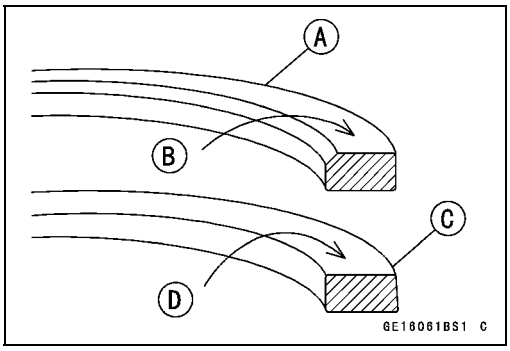

NOTE

○*If a new piston is used, use new piston ring.*

- Install the piston with its dent mark facing forward.
- Fit a new piston pin snap ring into the side of the piston so that the ring opening [A] does not coincide with the slit [B] of the piston pin hole.

○Apply molybdenum disulfide oil solution to the piston pins and piston journals.

○When installing the piston pin snap ring, compress it only enough to install it and no more.

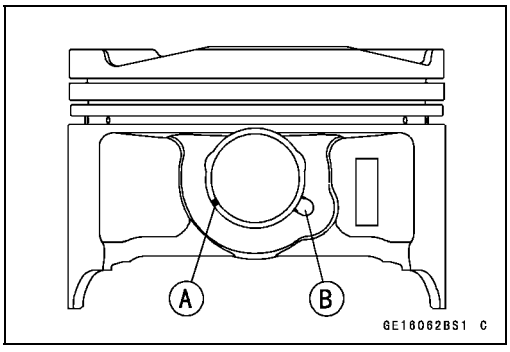

NOTICE

Do not reuse snap rings, as removal weakens and deforms them. They could fall out and score the cylinder wall.

- Install the cylinder (see Cylinder Installation).

Cylinder Wear Inspection

- Since there is a difference in cylinder wear in different directions, take a side-to-side and a front-to-back measurement at each of the two locations (total of four measurements) shown in the figure.

★If any of the cylinder inside diameter measurements exceeds the service limit, replace the cylinder.
10 mm (0.39 in.) [A]
60 mm (2.36 in.) [B]

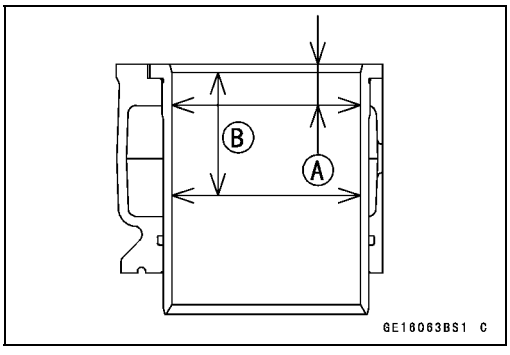

Cylinder Inside Diameter

Standard:	**68.400 ~ 68.412 mm (2.6929 ~ 2.6934 in.)**
Service Limit:	**68.50 mm (2.6969 in.)**

Piston Wear Inspection

- Measure the outside diameter [A] of each piston 5 mm (0.20 in.) [B] up from the bottom of the piston at a right angle to the direction of the piston pin.

★If the measurement is under service limit, replace the piston.

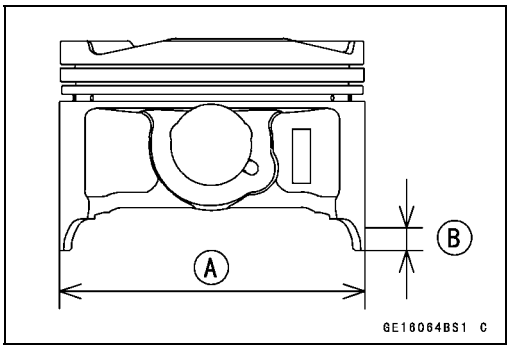

Piston Diameter

Standard:	**68.345 ~ 68.360 mm (2.6907 ~ 2.6913 in.)**
Service Limit:	**68.20 mm (2.6850 in.)**

Cylinder, Pistons

Piston Ring, Piston Ring Groove Wear Inspection

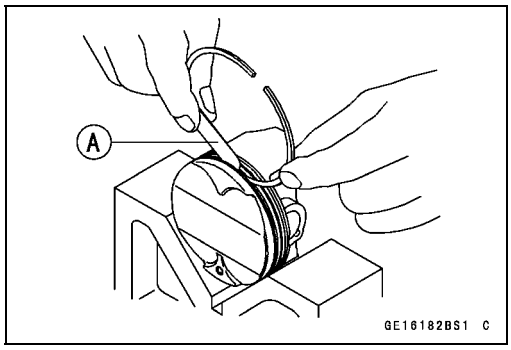

- Check for uneven groove wear by inspecting the ring seating.

★The rings should fit perfectly parallel to groove surfaces. If not, replace the piston and all the piston rings.

- With the piston rings in their grooves, make several measurements with a thickness gauge [A] to determine piston ring/groove clearance.

Piston Ring/Groove Clearance

Top

Standard:	**0.04 ~ 0.07 mm (0.0016 ~ 0.0028 in.)**
Service Limit:	**0.17 mm (0.0067 in.)**

Second

Standard:	**0.02 ~ 0.05 mm (0.0008 ~ 0.0020 in.)**
Service Limit:	**0.15 mm (0.0059 in.)**

Piston Ring Groove Width Inspection

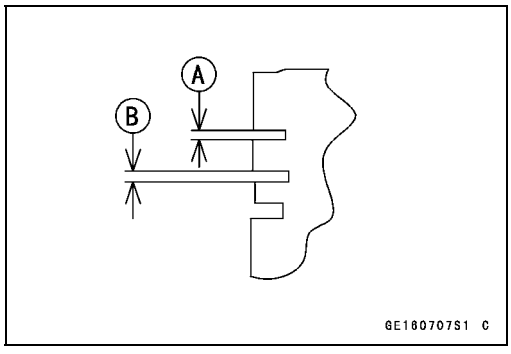

- Measure the piston ring groove width.

○Use a vernier caliper at several points around the piston.

Piston Ring Groove Width

Top [A]

Standard:	**0.83 ~ 0.85 mm (0.0327 ~ 0.0335 in.)**
Service Limit:	**0.93 mm (0.037 in.)**

Second [B]

Standard:	**0.81 ~ 0.83 mm (0.0319 ~ 0.0327 in.)**
Service Limit:	**0.91 mm (0.036 in.)**

★If the width of any of the two grooves is wider than the service limit at any point, replace the piston.

Piston Ring Thickness Inspection

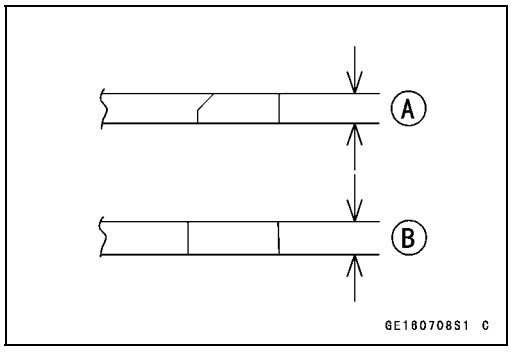

- Measure the piston ring thickness.

○Use the micrometer to measure at several points around the ring.

Piston Ring Thickness

Top [A]

Standard:	**0.78 ~ 0.79 mm (0.0307 ~ 0.0311 in.)**
Service Limit:	**0.71 mm (0.028 in.)**

Second [B]

Standard:	**0.78 ~ 0.79 mm (0.0307 ~ 0.0311 in.)**
Service Limit:	**0.71 mm (0.028 in.)**

★If any of the measurements is less than the service limit on either of the rings, replace all the rings.

NOTE

○*When using new rings in a used piston, check for uneven groove wear. The rings should fit perfectly parallel to the groove sides. If not, replace the piston.*

Piston Ring End Gap Inspection

- Place the piston ring [A] inside the cylinder, using the piston to locate the ring squarely in place. Set it close to the bottom of the cylinder, where cylinder wear is low.
- Measure the gap [B] between the ends of the ring with a thickness gauge.

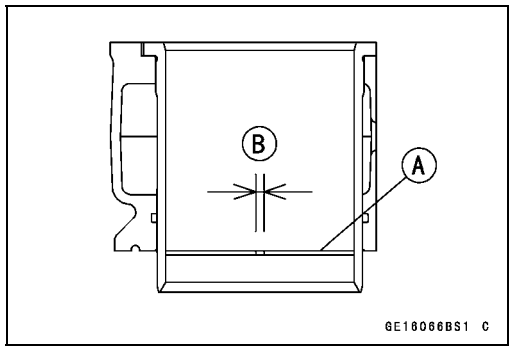

Piston Ring End Gap

Top

Standard: 0.30 ~ 0.40 mm (0.0118 ~ 0.0157 in.)

Service Limit: 0.7 mm (0.028 in.)

Second

Standard: 0.45 ~ 0.55 mm (0.0177 ~ 0.0217 in.)

Service Limit: 0.9 mm (0.035 in.)

★If the end gap of either ring is greater than the service limit, replace all the rings.

Throttle Body Holder

Throttle Body Holder Installation

- Apply grease to the O-rings [A].
- Be sure to install the O-rings.
- Install the clamps [B] as shown and so that its hole fit on the projection [C] of the holder.
- Tighten:

Torque - Throttle Body Assy Holder Bolts [D]: 13 N·m (1.3 kgf·m, 115 in·lb)
Throttle Body Assy Holder Clamp Bolts [E]: 2.0 N·m (0.20 kgf·m, 18 in·lb)

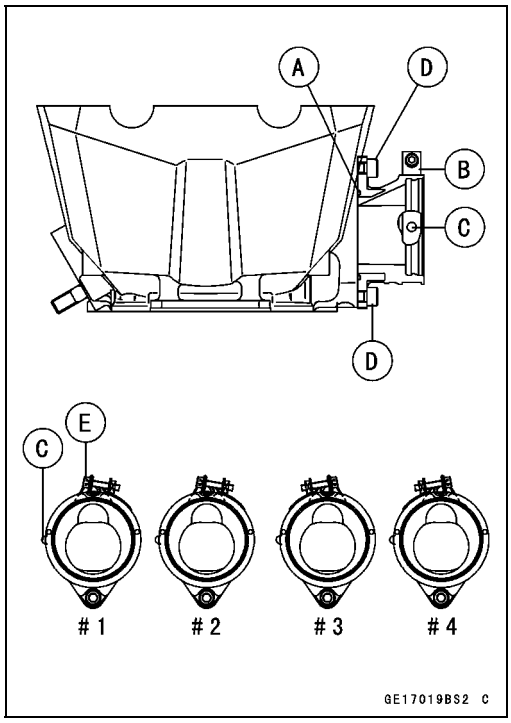

Muffler

⚠ WARNING

The muffler can become extremely hot during normal operation and cause severe burns. Do not remove the muffler while it is hot.

Muffler Body Removal

- Slide the dust covers [A].
- Loosen the locknuts [B], and turn the adjusters [C] to give the cable plenty of play.

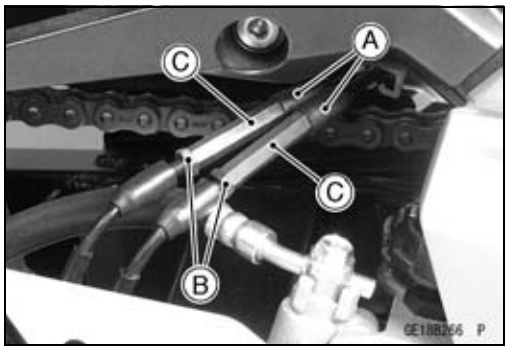

- Remove:
  Clamp Bolt [A] (Loosen)
  Mounting Bolt [B] and Nut [C]
  Muffler Body

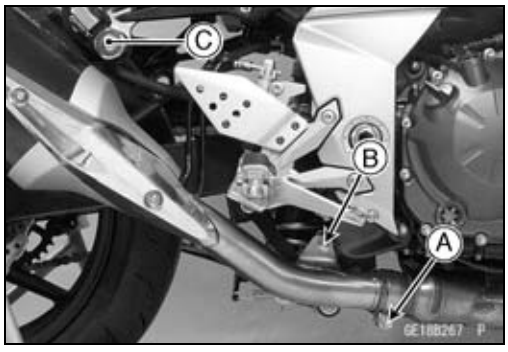

- Remove:
  Bolts [A]
  Cover [B]

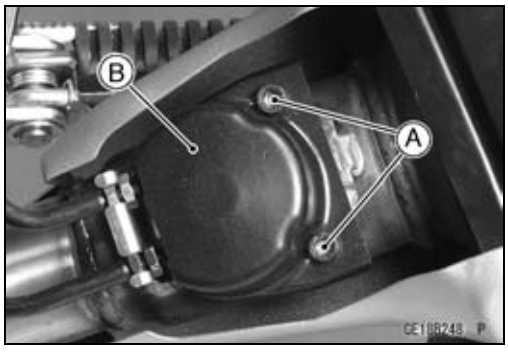

- Loosen the locknuts [A].
- Remove the exhaust butterfly valve cable lower ends [B] from the pulley [C].

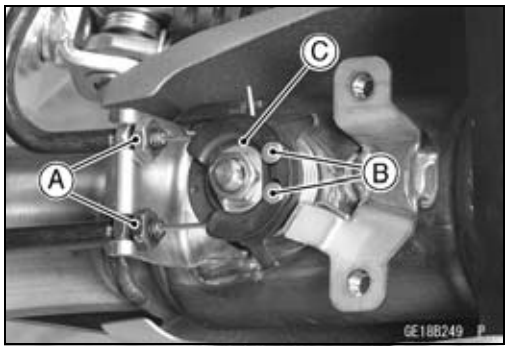

Muffler

Muffler Body Installation

- Replace the muffler body gasket [A] with a new one.
- Install the muffler body gasket until it is bottomed so that the inside chamfer side faces rear [B].
- Install the muffler body clamp bolt [C] as shown in the figure.
  Downside [D]
  Inside [E]
  Front [F]
  Viewed from Rear [G]
  35° [H]
  About 6 mm (0.24 in.) [I]
- Install the muffler body.
  - ○Install the muffler body until it stops at the bottom surface of the exhaust pipe.
- Replace the muffler body mounting nut with a new one.
- Install the muffler body mounting bolt, nut and clamp bolt, following the specified installing sequence.
  - ○First, tighten the muffler body mounting bolt [J] temporarily.
  - ○Second, tighten the muffler body mounting nut [K] temporarily.
  - ○Third, tighten the muffler body clamp bolt [C] securely.
  - ○Fourth, hold the front part of the muffler body upward so that the bolt [J] positions at bottom of the mounting hole [L].
  - ○Fifth, tighten the muffler body mounting bolt [J] securely.
  - ○Sixth, tighten the muffler body mounting nut [K] securely.
- Tighten:

Torque - Muffler Body Clamp Bolt: 15 N·m (1.5 kgf·m, 11 ft·lb)
Muffler Body Mounting Bolt:17 N·m (1.7 kgf·m, 13 ft·lb)
Muffler Body Mounting Nut: 34 N·m (3.5 kgf·m, 25 ft·lb)

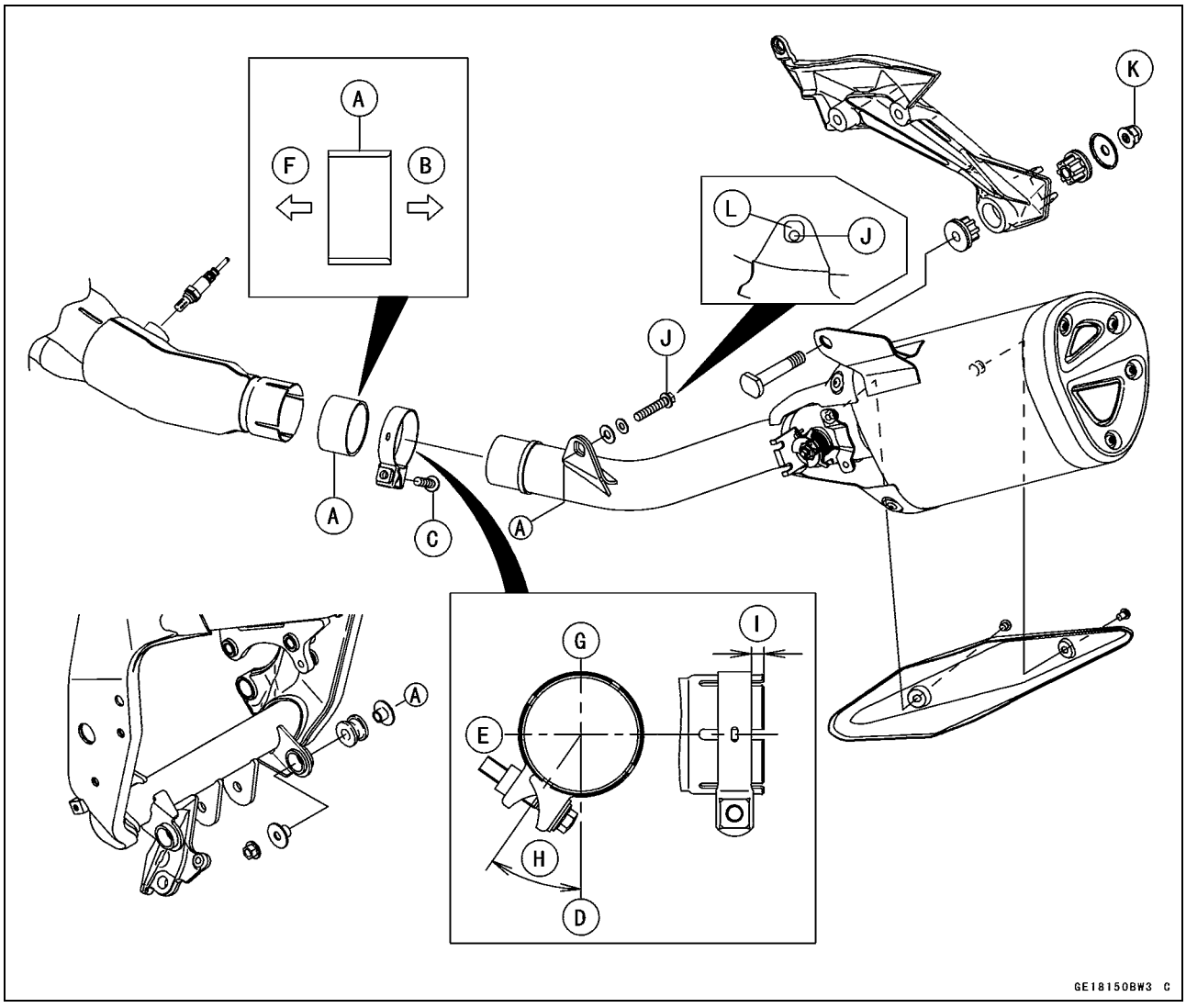

- Install the exhaust butterfly valve cables, and adjust them (see Exhaust Butterfly Valve Cable Installation).
- Thoroughly warm up the engine, wait until the engine cools down, retighten all the bolts and nut.
- Install the removed parts (see appropriate chapters).

○When installing, run the lead correctly (see Cable, Wire, and Hose Routing section in the Appendix chapter).

Exhaust Pipe Removal

- Remove:
  Oxygen Sensor (Equipped Models) (see Oxygen Sensor Removal (Equipped Models) in the Electrical System chapter)
  Radiator Lower Bolt and Radiator Hoses (see Radiator and Radiator Fan Removal in the Cooling System chapter)
  Bolts [A]
  Bracket [B]

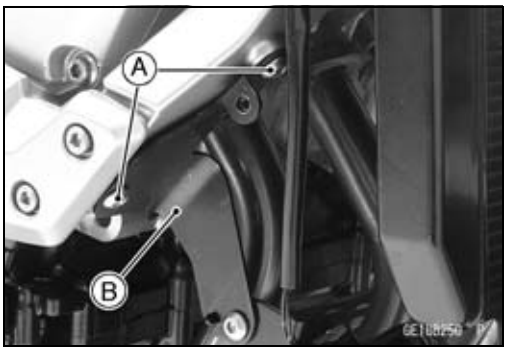

Muffler

- Loosen the clamp bolt [A].

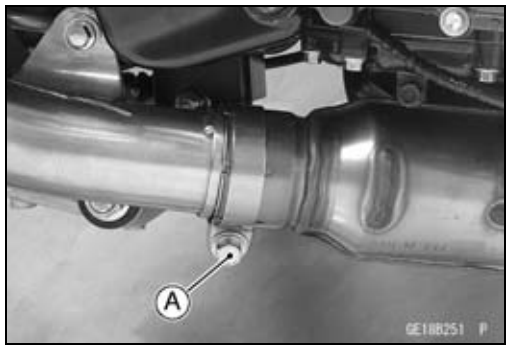

- Remove:
  Exhaust Pipe Manifold Holder Nuts [A]
  Exhaust Pipe [B]

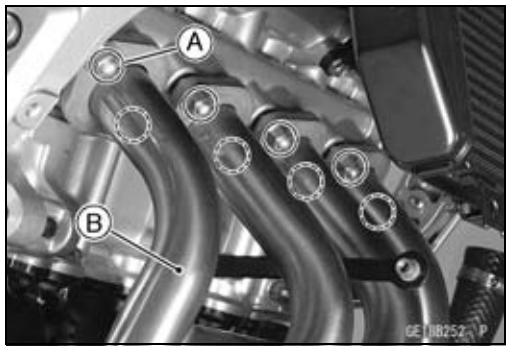

Exhaust Pipe Installation

- Replace the exhaust pipe gaskets [A] and muffler body gasket [B] with new ones and install them.
- Install the muffler body gasket until it is bottomed so that the inside chamfer side faces rear.
- Install the exhaust pipe [C].
- Install the muffler body clamp bolt [D] (see Muffler Body Installation).
- Tighten the exhaust pipe manifold holder nuts [E] following the specified tightening sequence.

○Do not deform the exhaust pipe gaskets.

- Tighten:

Torque - Exhaust Pipe Manifold Holder Nuts [E]: 17 N·m (1.7 kgf·m, 13 ft·lb)

- Thoroughly warm up the engine, wait until the engine cools down, retighten all the bolt and nuts.
- Install the removed parts (see appropriate chapters).

○When installing, run the each leads correctly (see Cable, Wire, and Hose Routing section in the Appendix chapter).

Muffler

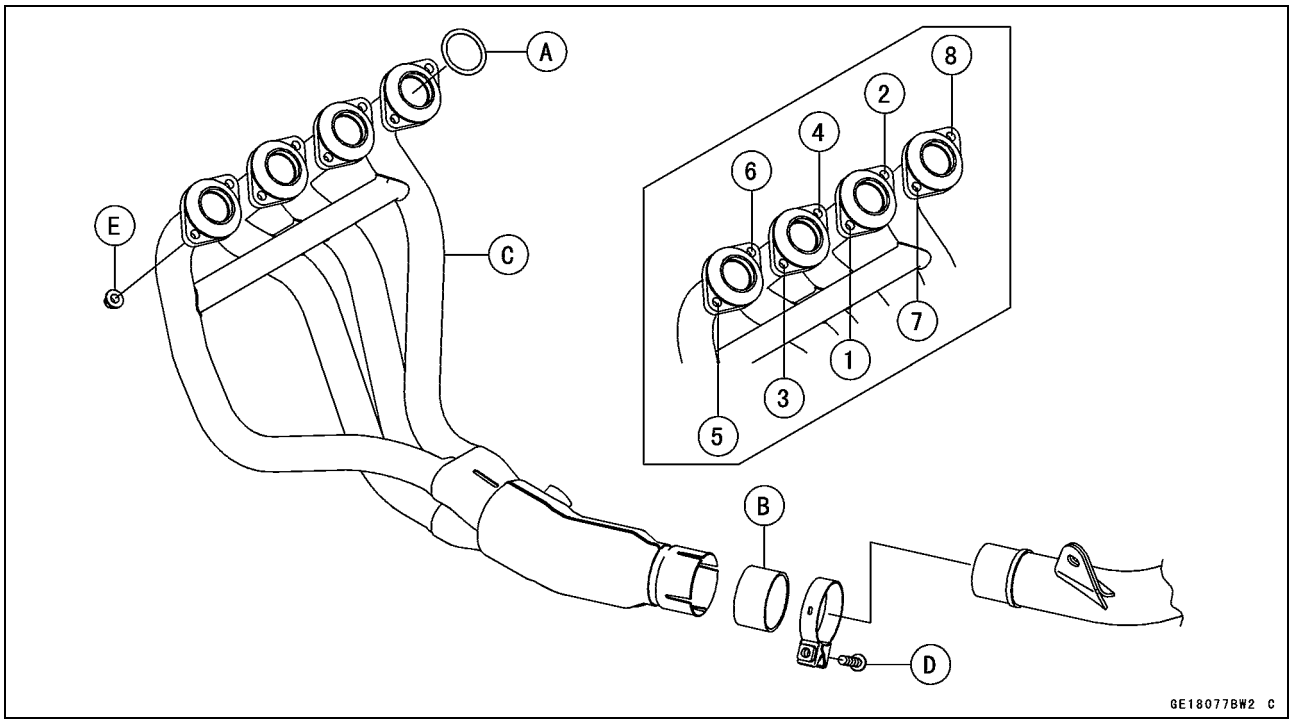

Exhaust Butterfly Valve Cable Removal

- Slide the dust covers [A].
- Loosen the locknuts [B], and turn the adjusters [C] to give the cable plenty of play.

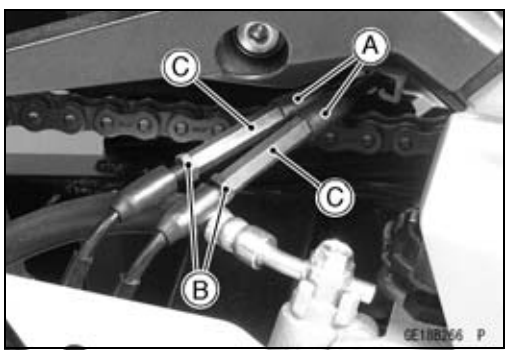

- Remove:
  Left Side Cover (see Side Cover Removal in the Frame chapter)
  Clamp [A]
  Exhaust Butterfly Valve Cable Upper Ends [B]

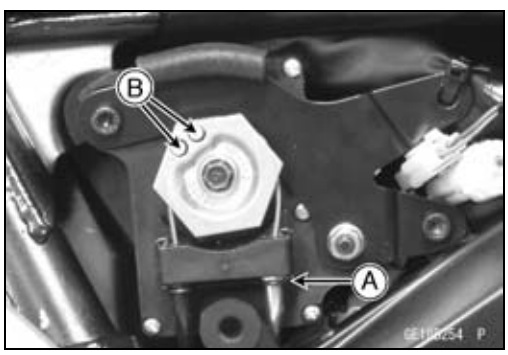

- Remove:
  Exhaust Butterfly Valve Cable Lower Ends (see Muffler Body Removal)
  Exhaust Butterfly Valve Cables

Muffler

Exhaust Butterfly Valve Cable Installation

- Confirm whether pulley [A] is an angle shown in the figure.
  41.7° ±7° [B]

○This position is original position of the pulley.

NOTE

○*Correct the position electrically after confirming use is discontinued and there is no damage when differing from the angle of shown in the figure.*

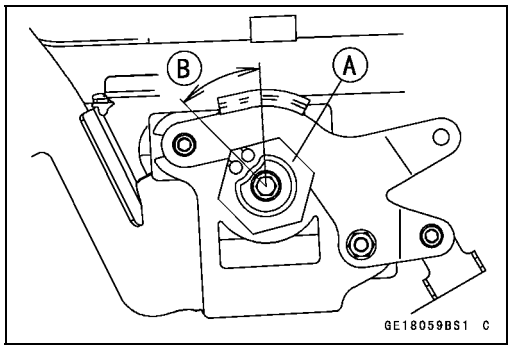

NOTICE

Do not correct the pulley position with the tool, forcibly. The actuator damage will occur.

★If the angle is wrong, adjust the pulley (see Exhaust Butterfly Valve Actuator Installation in the Fuel System (DFI) chapter).

- Install the exhaust butterfly valve cable lower ends to the pulley of right muffler body.
  6 mm (0.24 in.) [A]
- Tighten:

  Torque - Exhaust Butterfly Valve Cable Locknuts: 6.9 N·m (0.70 kgf·m, 61 in·lb)
- Install the cover.
- Tighten the bolts.
- Run the cables correctly (see Cable, Wire, and Hose Routing section in the Appendix chapter).

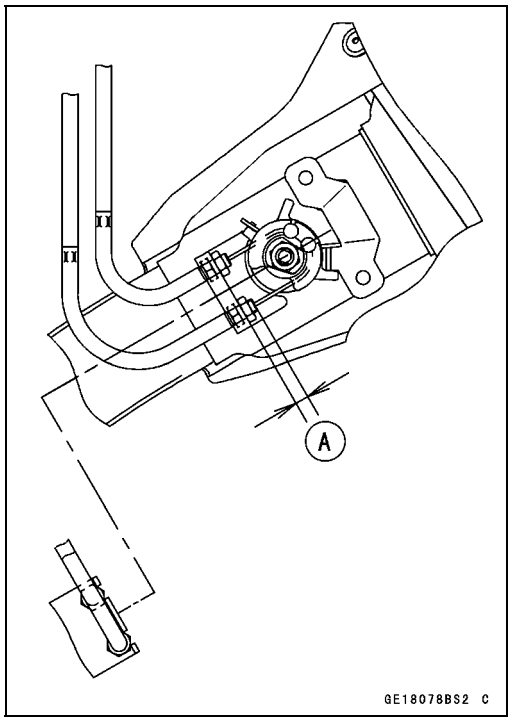

- Install the exhaust butterfly valve cable upper ends to the pulley of actuator.
  Close Cable (Black) [A]
  Open Cable (White) [B]
- Install the clamp [C].

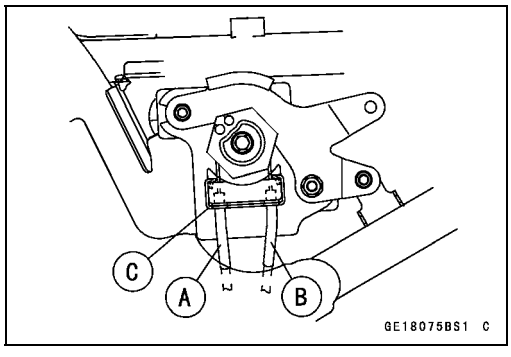

Muffler

- Stretch the open cable (white) [A] first by using the adjuster [B].

○Turn the adjuster counterclockwise until it becomes hard to turn.
Locknut of White [C]

NOTICE

To keep the correct exhaust butterfly valve position, adjust the open cable first. Do not overstretch. If the adjustment of the exhaust butterfly valve cables are incorrect, the exhaust butterfly valve actuator does not operate correctly.

- Then, stretch the close cable (black) [D] by using the adjuster [E].

○Turn the adjuster counterclockwise until it becomes hard to turn.
Locknut of Black [F]

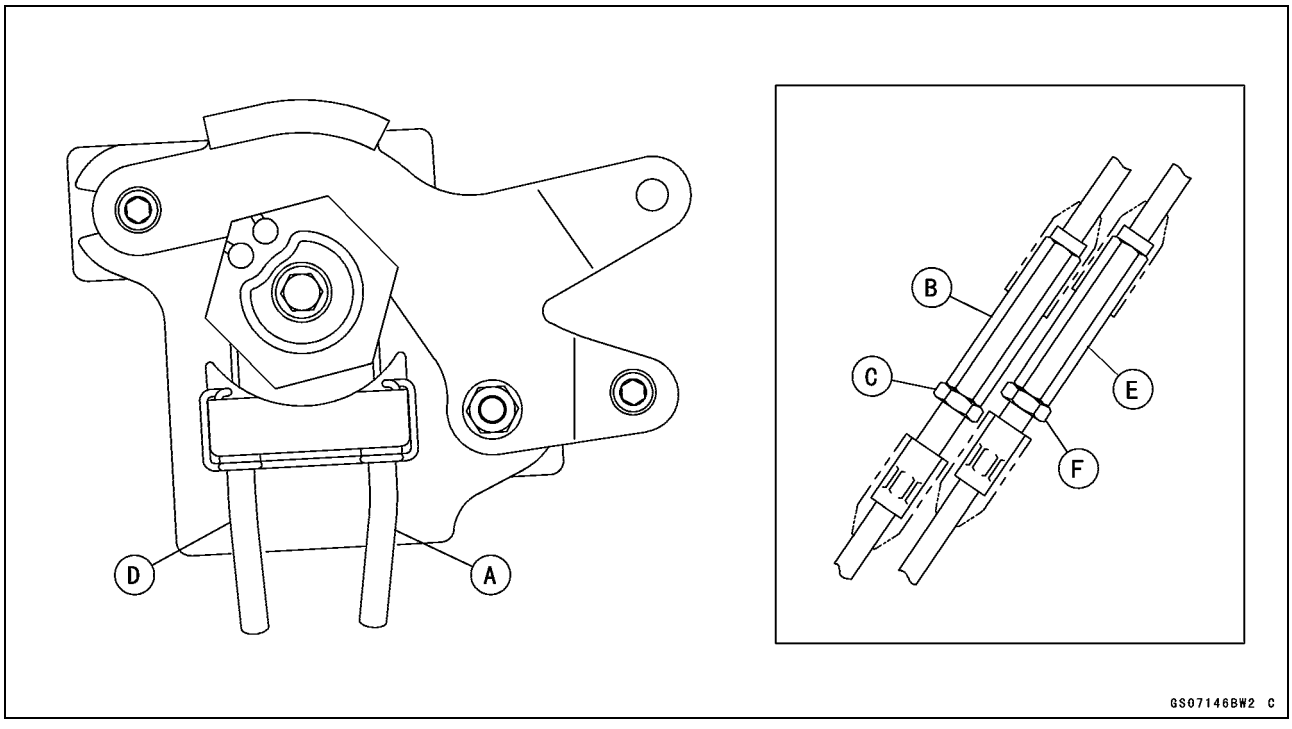

Muffler

- Turn the ignition switch to ON and wait until the pulley [A] turns fully clockwise [B].
- Turn off the ignition switch when the pulley become fully clockwise position [C] as shown in the figure.

○The target position is a position in which the upper end [D] of the open cable and the screw [E] of the actuator become almost straight.

- The pulley stops at fully clockwise position.

NOTE

○*The exhaust butterfly valve is full closed position when the pulley turned fully clockwise. Therefore, the play [F] appears in the open cable when pulley is fully clockwise position. The open and close cables can be evenly stretching by adjusting this play.*

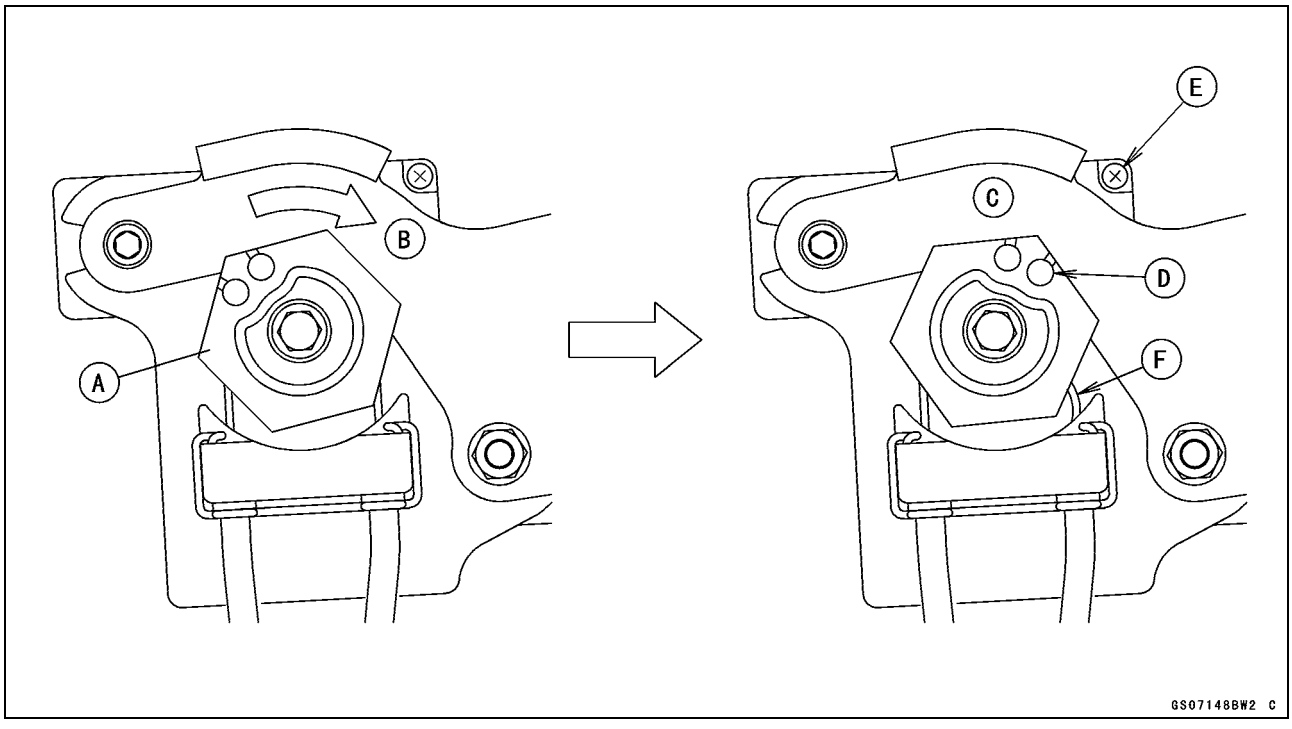

- Stretch the open cable (white) by using the adjuster [A].
○Turn the adjuster counterclockwise until it becomes hard to turn.
  Locknut of White [B]

NOTICE

Do not overstretch. If the adjustment of the exhaust butterfly valve cables are incorrect, the exhaust butterfly valve actuator does not operate correctly.

- Tighten:

Torque - Exhaust Butterfly Valve Cable Adjuster Locknuts: 6.9 N·m (0.70 kgf·m, 61 in·lb)

- Cover the dust covers [C].
- Be sure that the dust covers [D] are in positions as shown.
- Turn the ignition switch to ON, and confirm the pulley turns clockwise and then counterclockwise, and clockwise again.
★If the operation of the pulley is different, readjust the exhaust butterfly valve cables.
- Turn the ignition switch to OFF.
○The pulley returns to the original position.
- Confirm the pulley is original position.
★If the pulley is no original position, adjust the pulley (see Exhaust Butterfly Valve Actuator Installation in the Fuel System (DFI) chapter).

- Confirm the operation of the pulley as follows.
○Start the engine, and confirm the pulley turns clockwise and then it stops.
○Open the throttle, and confirm the pulley turns counterclockwise.
★If the pulley does not operate, readjust the exhaust butterfly valve cables.
- Install the removed parts (see appropriate chapters).

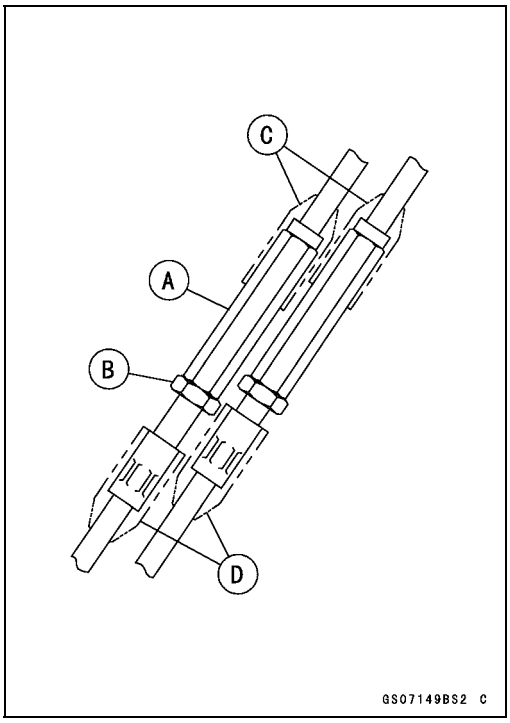

Clutch

Table of Contents

Exploded View 6-2
Specifications 6-4
Special Tool and Sealant 6-5
Clutch Lever and Cable 6-6
- Clutch Lever Free Play Inspection 6-6
- Clutch Lever Free Play Adjustment 6-6
- Clutch Cable Removal 6-6
- Clutch Cable Installation 6-6
- Clutch Cable Lubrication 6-6
- Clutch Lever Installation 6-6

Clutch Cover 6-7
- Clutch Cover Removal 6-7
- Clutch Cover Installation 6-7
- Release Shaft Removal 6-7
- Release Shaft Installation 6-8
- Clutch Cover Disassembly 6-8
- Clutch Cover Assembly 6-8

Clutch 6-9
- Clutch Removal 6-9
- Clutch Installation 6-9
- Clutch Plate Assembly Inspection 6-11
- Clutch Plate Assembly Adjustment 6-11
- Clutch Plate, Wear, Damage Inspection 6-12
- Clutch Plate Warp Inspection 6-12
- Clutch Spring Free Length Measurement 6-12

Exploded View

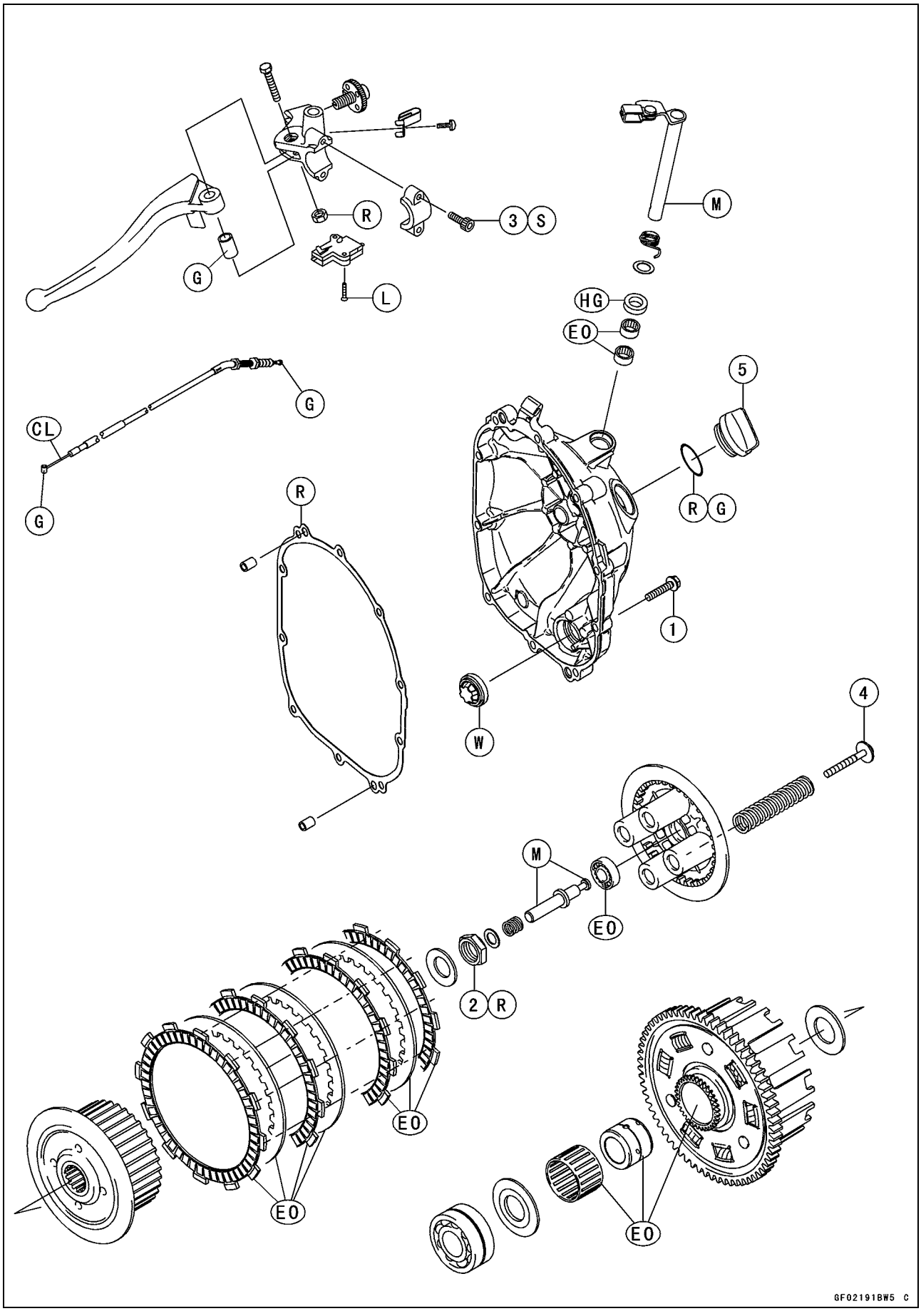

Exploded View

No.	Fastener	Torque			Remarks
		N·m	kgf·m	ft·lb	
1	Clutch Cover Mounting Bolts	11	1.1	97 in·lb	
2	Clutch Hub Nut	135	13.8	99.6	R
3	Clutch Lever Clamp Bolts	7.8	0.80	69 in·lb	S
4	Clutch Spring Bolts	8.8	0.90	78 in·lb	
5	Oil Filler Plug	2.0	0.20	18 in·lb	

CL: Apply cable lubricant.
EO: Apply engine oil.
G: Apply grease.
HG: Apply high-temperature grease.
L: Apply a non-permanent locking agent.
M: Apply molybdenum disulfide grease.
R: Replacement Parts
S: Follow the specified tightening sequence.
W: Apply water.

6-4 CLUTCH

Specifications

Item	Standard	Service Limit
Clutch Lever Free Play	2 ~ 3 mm (0.08 ~ 0.12 in.)	– – –
Clutch		
Clutch Plate Assembly Length	37.7 ~ 38.3 mm (1.48 ~ 1.51 in.)	– – –
Friction Plate Thickness	2.72 ~ 2.88 mm (0.107 ~ 0.113 in.)	2.4 mm (0.094 in.)
Friction and Steel Plate Warp	0.15 mm (0.0059 in.) or less	0.3 mm (0.012 in.)
Clutch Spring Free Length	64.1 mm (2.52 in.)	61.2 mm (2.41 in.)

Special Tool and Sealant

Clutch Holder:
57001-1243

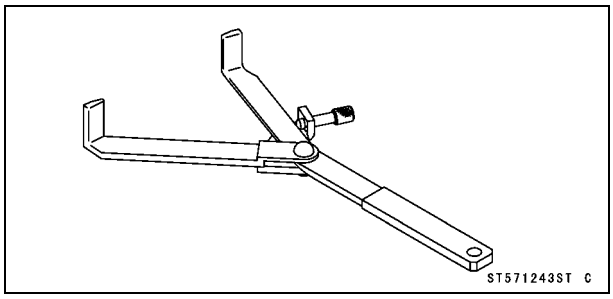

Liquid Gasket, TB1211F:
92104-0004

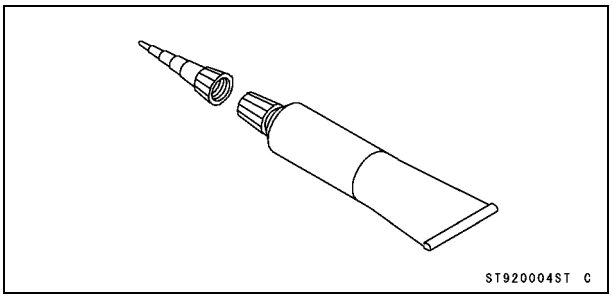

Clutch Lever and Cable

Clutch Lever Free Play Inspection

- Refer to the Clutch Operation Inspection in the Periodic Maintenance chapter.

Clutch Lever Free Play Adjustment

- Refer to the Clutch Operation Inspection in the Periodic Maintenance chapter.

Clutch Cable Removal

- Slide the dust cover [A] at the clutch cable lower end out of place.
- Loosen the nuts [B], and slide the lower end of the clutch cable to give the cable plenty of play.

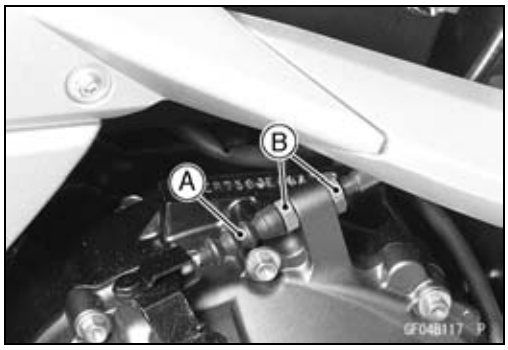

- Screw in the adjuster.
- Line up the slots [A] in the clutch lever and adjuster [B], and then free the cable from the lever.
- Free the clutch inner cable tip from the clutch release lever.
- Push the release lever toward the front of the motorcycle and tape the release lever to the clutch cover to prevent the release shaft from falling out.
- Pull the clutch cable out of the frame.

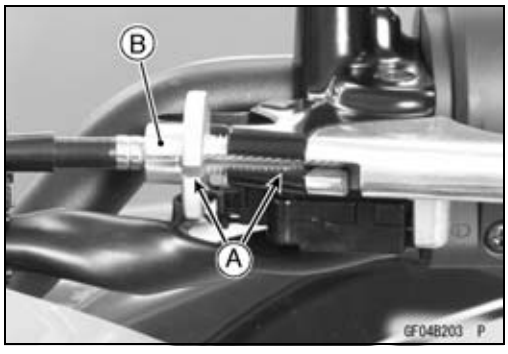

Clutch Cable Installation

- Run the clutch cable correctly (see Cable, Wire, and Hose Routing section in the Appendix chapter).
- Adjust the clutch cable (see Clutch Operation Inspection in the Periodic Maintenance chapter).

Clutch Cable Lubrication

- Refer to the Chassis Parts Lubrication in the Periodic Maintenance chapter.

Clutch Lever Installation

- Install the clutch lever so that the mating surface [A] of the clutch lever clamp is aligned with the punch mark [B].
- Tighten the upper clamp bolt first, and then the lower clamp bolt. There will be a gap at the lower part of the clamp after tightening.

Torque - Clutch Lever Clamp Bolts: 7.8 N·m (0.80 kgf·m, 69 in·lb)

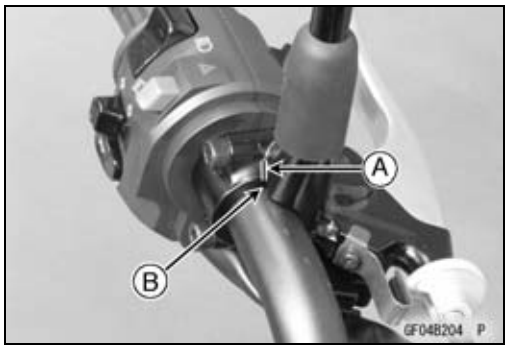

Clutch Cover

Clutch Cover Removal

- Remove:
  Engine Oil (Drain, see Engine Oil Change in the Periodic Maintenance chapter)
  Clutch Cable Lower End [A]
  Clutch Cover Mounting Bolts [B]

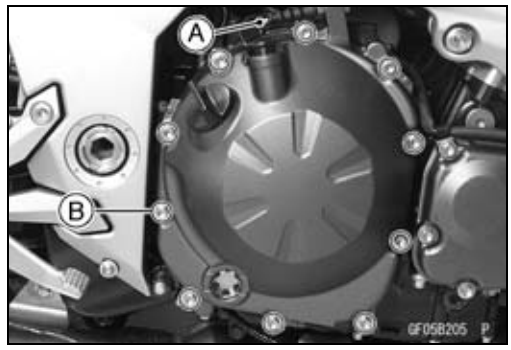

- Turn the release lever [A] toward the rear as shown in the figure, and remove the clutch cover [B].
  About 90° [C]

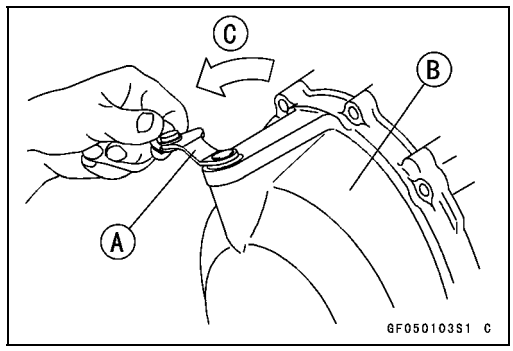

Clutch Cover Installation

- Using a high-flash point solvent, clean off any oil or dirt that may be on the silicone sealant coating area. Dry them with a clean cloth.
- Apply silicone sealant to the area [A] where the mating surface of the crankcase touches the clutch cover gasket.

  Sealant - Liquid Gasket, TB1211F: 92104-0004
- Replace the clutch cover gasket with a new one.
- Tighten the clutch cover mounting bolts.

  Torque - Clutch Cover Mounting Bolts: 11 N·m (1.1 kgf·m, 97 in·lb)

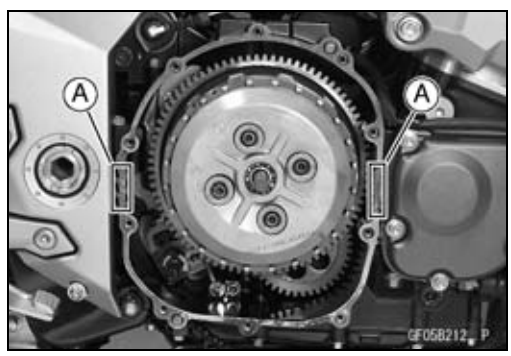

Release Shaft Removal

NOTICE
Do not remove the clutch release lever and shaft assembly unless it is absolutely necessary. If removed, the oil seal replacement may be required.

- Remove the clutch cover (see Clutch Cover Removal).
- Pull the lever and shaft assembly straight out of the clutch cover.

Clutch Cover

Release Shaft Installation

- Apply high-temperature grease to the oil seal lips on the upper ridge of the clutch cover.
- Apply engine oil to the needle bearings in the hole of the clutch cover.
- Apply molybdenum disulfide grease to the pusher-holding portion [A] on the release shaft.
- Install the washer [B] and spring [C].
- Insert the release shaft straight into the upper hole of the clutch cover.

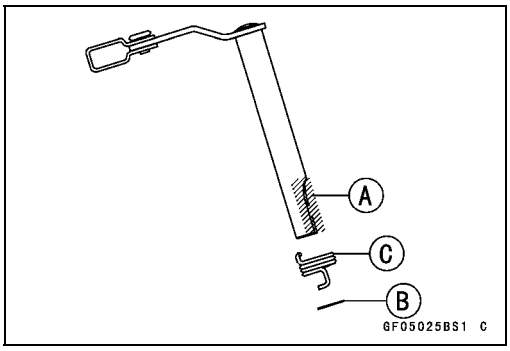

NOTICE

When inserting the release shaft, be careful not to remove the spring of the oil seal.

- Fit the spring [A] as shown in the figure.
  Viewed from Rear [B]
  Release Shaft [C]
  Clutch Cover [D]

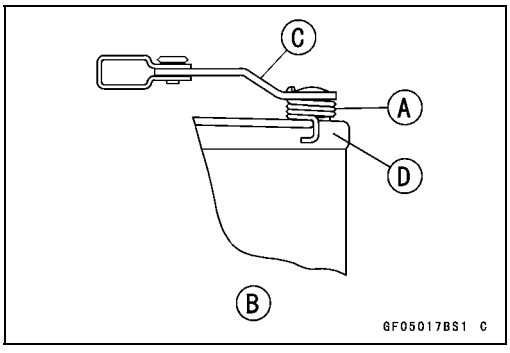

Clutch Cover Disassembly

- Remove:
  Oil Seal [A]
  Needle Bearings [B]
  Oil Level Gauge

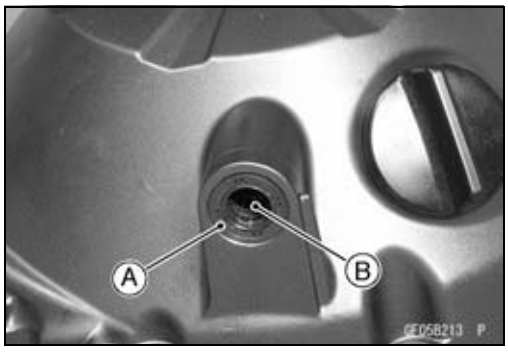

Clutch Cover Assembly

- Replace the needle bearings and oil seal with new ones.

NOTE

○*Install the needle bearings so that the manufacture's mark face out.*

- Install the needle bearings [A] and oil seal [B] position as shown in the figure.
  Press the needle bearing until the bottom [C].
  Press the needle bearing so that the bearing surface [D] is flush with the housing end of clutch cover [E].
- Install the oil level gauge until the bottom.

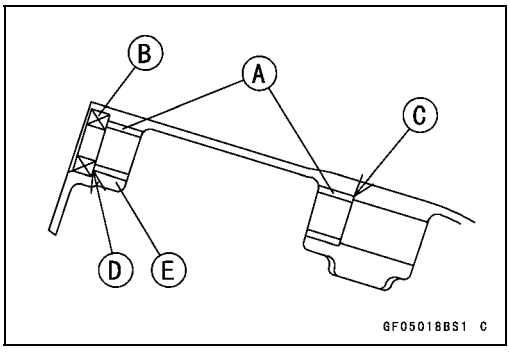

Clutch

Clutch Removal

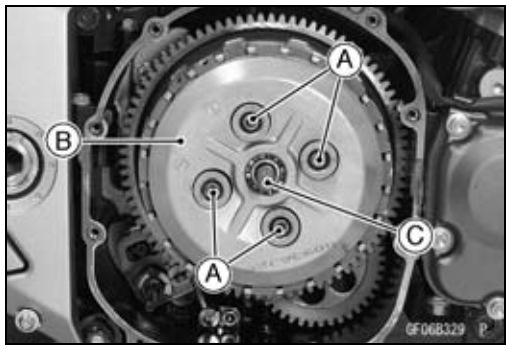

- Remove:
  Engine Oil (Drain, see Engine Oil Change in the Periodic Maintenance chapter)
  Clutch Cover (see Clutch Cover Removal)
  Clutch Spring Bolts [A]
  Clutch Springs
  Clutch Spring Plate [B] (with Thrust Bearing, Pusher [C], Spring and Washer)

- Remove:
  Friction Plates and Steel Plates
  Clutch Hub Nut [A]

○Holding the clutch hub [B], remove the nut and washer.

Special Tool - Clutch Holder [C]: 57001-1243

- Remove:
  Clutch Hub
  Spacer

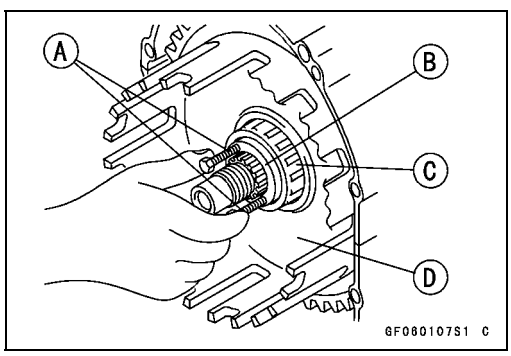

- Using the two 4 mm (0.16 in.) bolts [A], pull out the sleeve [B], needle bearing [C] and clutch housing [D].
- Remove the spacer.

Clutch Installation

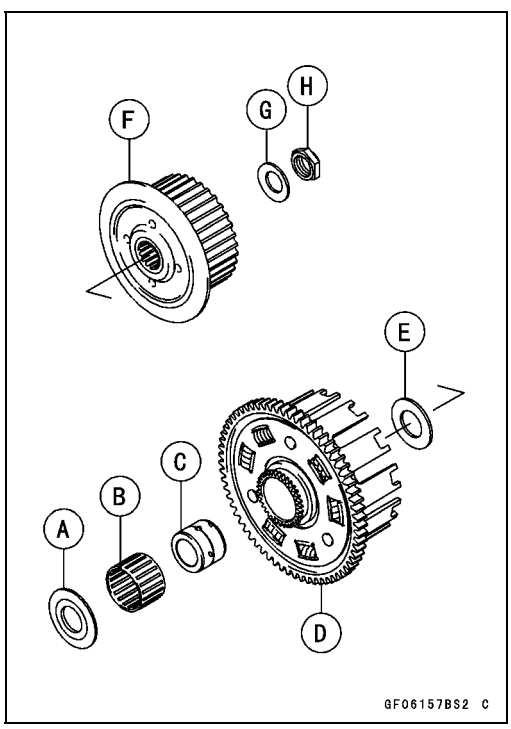

- Install the following parts on the drive shaft.
  Spacer [A]
  Needle Bearing [B]
  Sleeve [C]
  Clutch Housing [D]
  Spacer [E]
  Clutch Hub [F]
  Washer [G]
  Nut [H]

Clutch

○Install the spacer [A] so that the tapered side [B] faces inward.

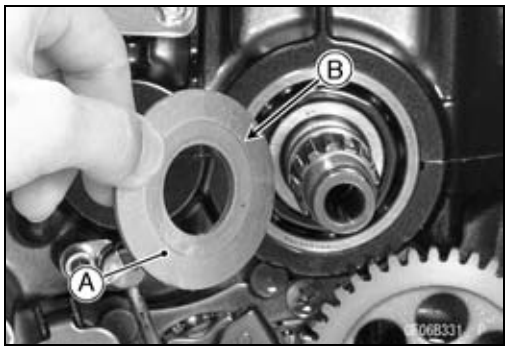

○Install the washer [A] so that the “OUTSIDE” mark [B] faces outward.

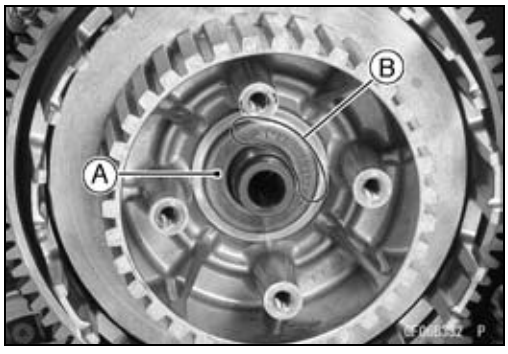

○Replace the clutch hub nut with a new one.
○Holding the clutch hub, tighten the clutch hub nut.

Special Tool - Clutch Holder: 57001-1243

Torque - Clutch Hub Nut: 135 N·m (13.8 kgf·m, 99.6 ft·lb)

● Install the friction plates and steel plates, starting with a friction plate and alternating them.

NOTICE
If new dry friction plates and steel plates are installed, apply engine oil to the surfaces of each plate to avoid clutch plate seizure.

○Install the last friction plate [A] fitting the tangs in the grooves in the housing as shown in the figure.

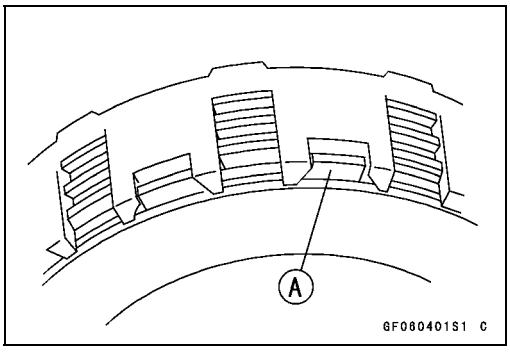

● Apply molybdenum disulfide grease to the pusher ends [A] and install the thrust bearing [B], pusher [C], spring [D] and washer [E] in the clutch spring plate [F].
○Apply engine oil to the needle bearing.

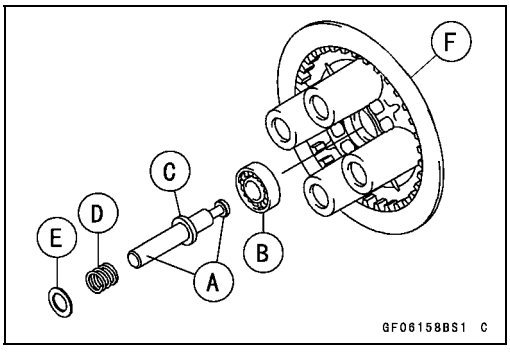

Clutch

- Align the mark [A] of the clutch spring plate [B] with the groove [C] of the clutch hub.
- Install:
  Clutch Spring Plate
  Clutch Springs
- Tighten the clutch spring bolts.

  Torque - Clutch Spring Bolts: 8.8 N·m (0.90 kgf·m, 78 in·lb)
- Install the clutch cover (see Clutch Cover Installation).

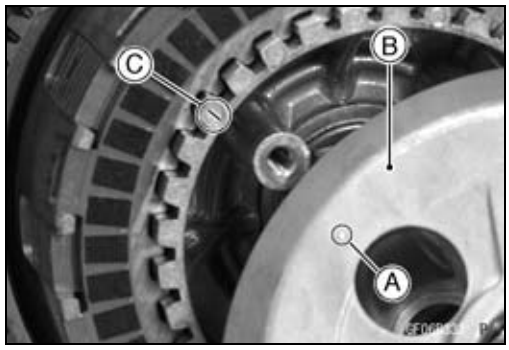

Clutch Plate Assembly Inspection

- Inspect the friction plate thickness (see Clutch Plate, Wear, Damage Inspection).
- Measure the length [A] of the clutch plate assembly as shown in the figure.

○Assemble:
  Clutch Hub [B]
  Friction Plates [C]
  Steel Plates [D]
  Clutch Spring Plate [E]
  Clutch Springs [F]
  Clutch Spring Bolts [G]

Torque - Clutch Spring Bolts: 8.8 N·m (0.90 kgf·m, 78 in·lb)

Clutch Plate Assembly Length
Standard: 37.7 ~ 38.3 mm (1.48 ~ 1.51 in.)

★If the length is not within the specified range, adjust the length (see Clutch Plate Assembly Adjustment).

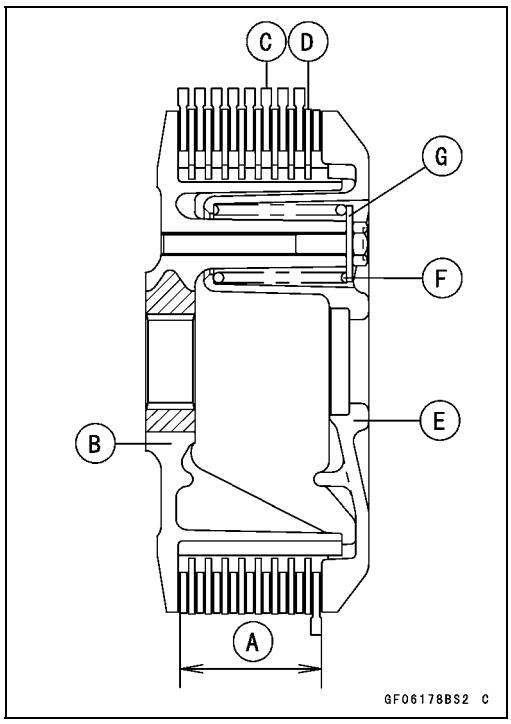

Clutch Plate Assembly Adjustment

- Inspect the clutch plate assembly length, and then replace the steel plate(s) which brings the length within the specified range.
- Remove:
  Clutch Spring Bolts
  Clutch Springs
  Clutch Spring Plate
- Replace the following steel plate(s).

Thickness	Part Number
1.4 mm (0.055 in.)	13089-1126
1.6 mm (0.063 in.) (STD)	13089-013
2.0 mm (0.079 in.)	13089-1073

NOTE

○*Do not use the steel plate of 1.4 mm (0.055 in.) and 2.0 mm (0.079 in.) thickness at the same time.*

- Install the removed parts, and inspect the clutch plate assembly length.

  Torque - Clutch Spring Bolts: 8.8 N·m (0.90 kgf·m, 78 in·lb)

Clutch

Clutch Plate, Wear, Damage Inspection

- Visually inspect the friction and steel plates for signs of seizure, overheating (discoloration), or uneven wear.
- Measure the thickness of each friction plate [A] at several points.

★If any plates show signs of damage, or if they have worn past the service limit, replace them with new ones.

Friction Plate Thickness

Standard: 2.72 ~ 2.88 mm (0.107 ~ 0.113 in.)

Service Limit: 2.4 mm (0.094 in.)

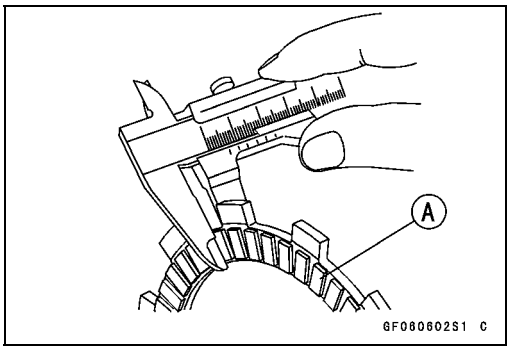

Clutch Plate Warp Inspection

- Place each friction plate or steel plate on a surface plate and measure the gap between the surface plate [A] and each friction plate or steel plate [B] with a thickness gauge [C]. The gap is the amount of friction or steel plate warp.

★If any plate is warped over the service limit, replace it with a new one.

Friction and Steel Plate Warp

Standard: 0.15 mm (0.0059 in.) or less

Service Limit: 0.3 mm (0.012 in.)

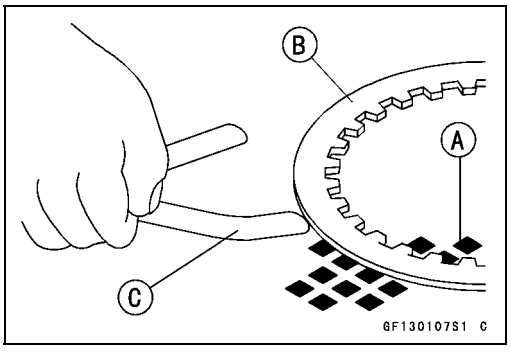

Clutch Spring Free Length Measurement

- Measure the free length of the clutch springs [A].

★If any spring is shorter than the service limit, it must be replaced.

Clutch Spring Free Length

Standard: 64.1 mm (2.52 in.)

Service Limit: 61.2 mm (2.41 in.)

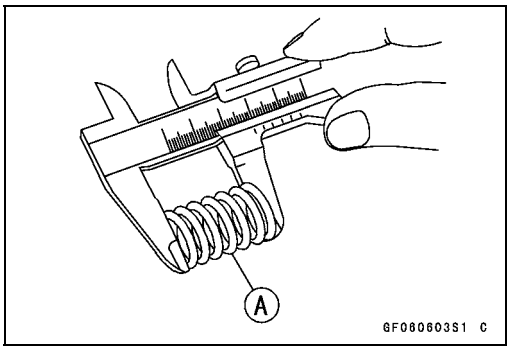

Engine Lubrication System

Table of Contents

Exploded View 7-2
Engine Oil Flow Chart 7-4
Specifications 7-5
Special Tools and Sealant 7-6
Engine Oil and Oil Filter 7-7
- Oil Level Inspection 7-7
- Engine Oil Change 7-7
- Oil Filter Replacement 7-7

Oil Pan 7-8
- Oil Pan Removal 7-8
- Oil Pan Installation 7-8

Oil Pressure Relief Valve 7-9
- Oil Pressure Relief Valve Removal 7-9
- Oil Pressure Relief Valve Installation 7-9
- Oil Pressure Relief Valve Inspection 7-9

Oil Pump 7-10
- Oil Pump Removal 7-10
- Oil Pump Installation 7-10
- Oil Pump Drive Gear Removal 7-11
- Oil Pump Drive Gear Installation 7-11

Oil Pressure Measurement 7-12
- Oil Pressure Measurement 7-12

Oil Pressure Switch 7-13
- Oil Pressure Switch Removal 7-13
- Oil Pressure Switch Installation 7-13

Exploded View

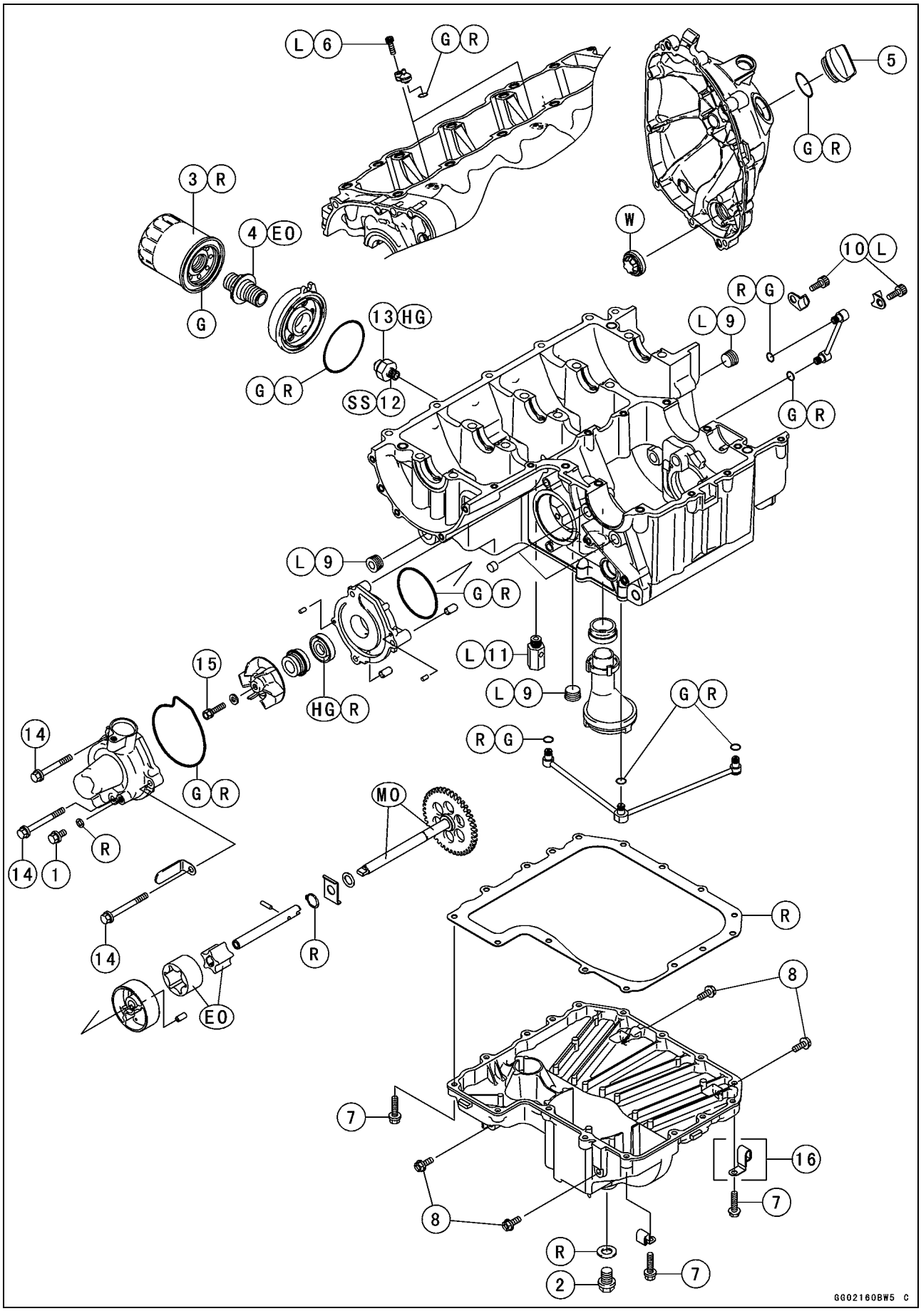

Exploded View

No.	Fastener	Torque			Remarks
		N·m	kgf·m	ft·lb	
1	Coolant Drain Bolt (Water Pump)	11	1.1	97 in·lb	
2	Engine Oil Drain Bolt	29	3.0	21	
3	Oil Filter	17	1.7	13	G, R
4	Oil Filter Holder	78	8.0	58	EO
5	Oil Filler Plug	2.0	0.20	18 in·lb	
6	Oil Jet Nozzle Bolts	6.9	0.70	61 in·lb	L
7	Oil Pan Bolts	11	1.1	97 in·lb	
8	Oil Pan Side Dummy Bolts	6.9	0.70	61 in·lb	
9	Oil Passage Plugs	20	2.0	15	L
10	Oil Pipe Holder Bolts	13	1.3	115 in·lb	L
11	Oil Pressure Relief Valve	15	1.5	11	L
12	Oil Pressure Switch	15	1.5	11	SS
13	Oil Pressure Switch Terminal Bolt	2.0	0.20	18 in·lb	HG
14	Water Pump Cover Bolts	11	1.1	97 in·lb	
15	Water Pump Impeller Bolt	9.8	1.0	87 in·lb	

16. Clamp (Oxygen Sensor Equipped Models)
EO: Apply engine oil.
G: Apply grease.
HG: Apply high-temperature grease.
L: Apply a non-permanent locking agent.
MO: Apply molybdenum disulfide oil solution.
(mixture of the engine oil and molybdenum disulfide grease in a weight ratio 10 : 1)
R: Replacement Parts
SS: Apply silicone sealant.
W: Apply water.

Engine Oil Flow Chart

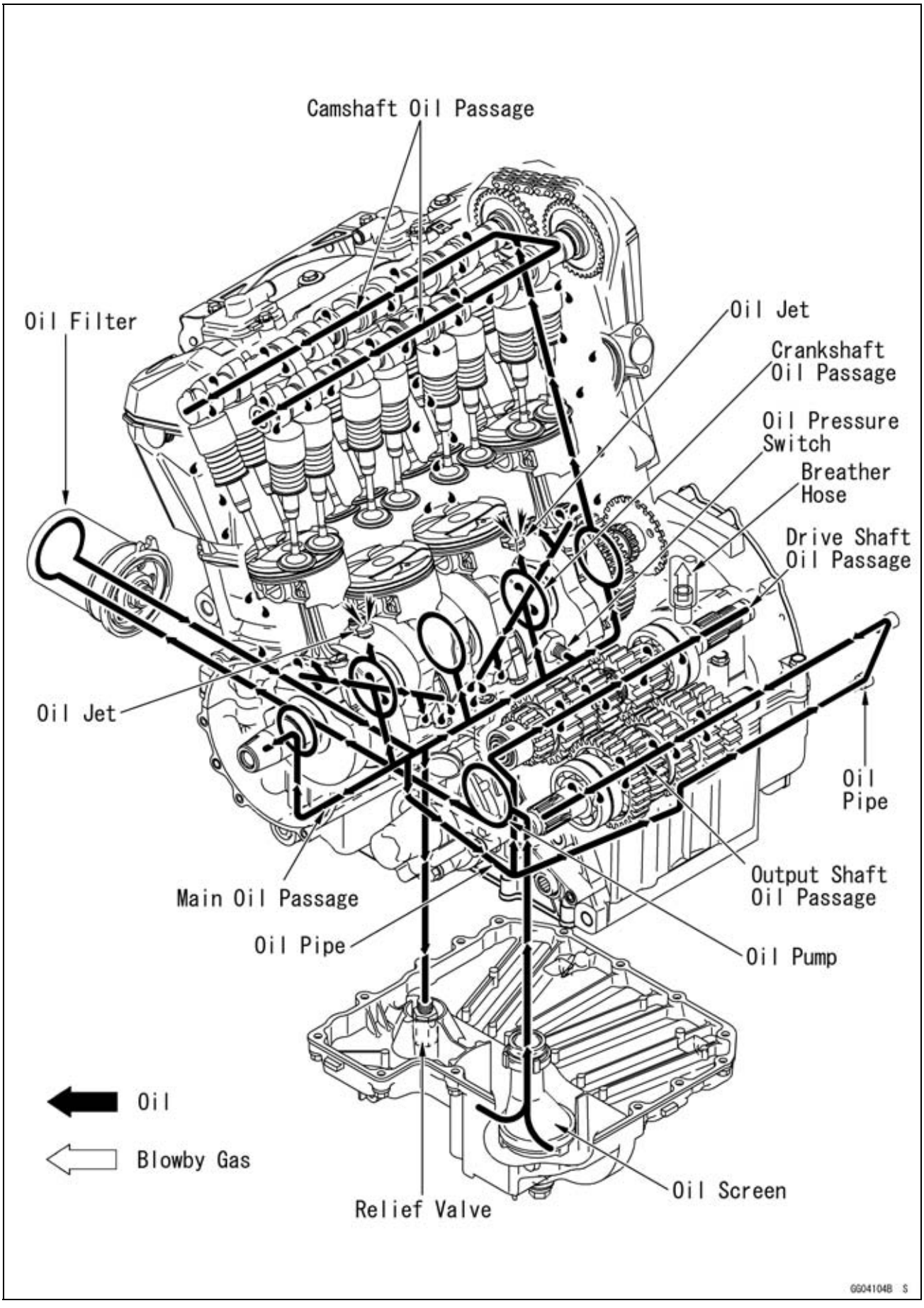

Specifications

Item	Standard
Engine Oil	
Type	API SG, SH, SJ, SL or SM with JASO MA, MA1 or MA2
Viscosity	SAE 10W-40
Capacity:	3.1 L (3.3 US gt) (when filter is not removed)
	3.3 L (3.5 US gt) (when filter is removed)
	3.8 L (4.0 US gt) (when engine is completely dry)
Level	Between upper and lower level lines (Wait 2 ~ 3 minutes after idling or running)
Oil Pressure Measurement	
Oil Pressure	147 ~ 226 kPa (1.5 ~ 2.3 kgf/cm², 21 ~ 33 psi) at 4 000 r/min (rpm), Oil Temperature 90°C (194°F)

Special Tools and Sealant

Outside Circlip Pliers:
57001-144

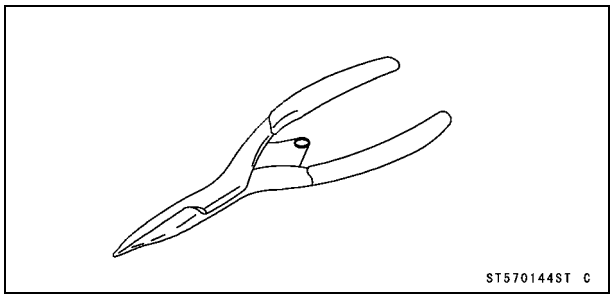

Oil Pressure Gauge Adapter, PT3/8:
57001-1233

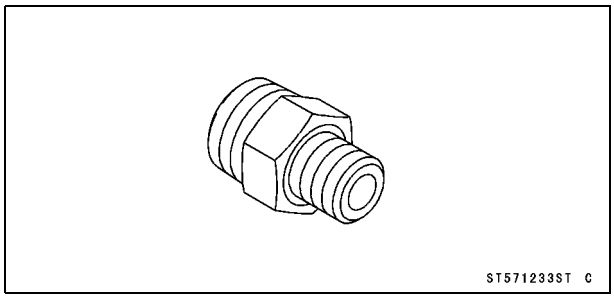

Oil Pressure Gauge, 10 kgf/cm²:
57001-164

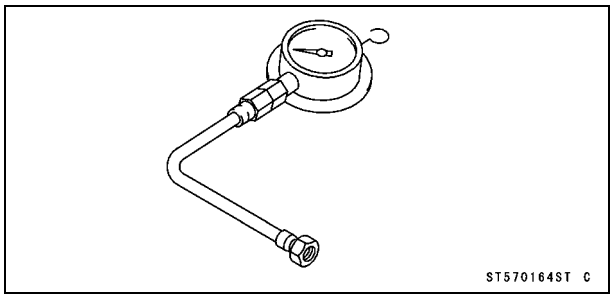

Liquid Gasket, TB1211:
56019-120

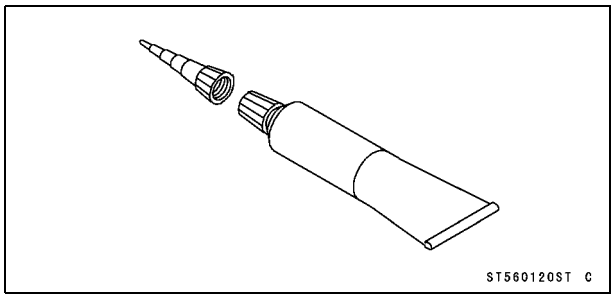

Engine Oil and Oil Filter

⚠ WARNING

Vehicle operation with insufficient, deteriorated, or contaminated engine oil will cause accelerated wear and may result in engine seizure, accident, and injury. Check the oil level before each use and change the oil and filter according to the periodic maintenance chart.

Oil Level Inspection

- Check that the engine oil level is between the upper [A] and lower [B] levels in the gauge.

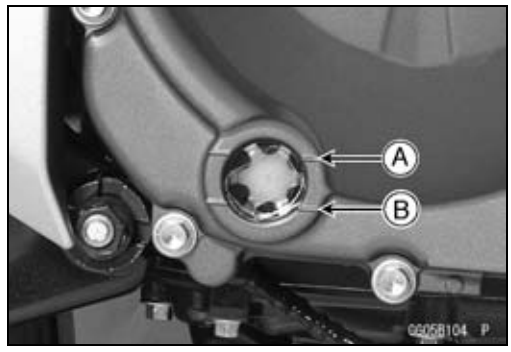

NOTE

○*Situate the motorcycle so that it is perpendicular to the ground.*

○*If the motorcycle has just been used, wait several minutes for all the oil to drain down.*

○*If the oil has just been changed, start the engine and run it for several minutes at idle speed. This fills the oil filter with oil. Stop the engine, then wait several minutes until the oil settles.*

NOTICE

Racing the engine before the oil reaches every part can cause engine seizure.
If the engine oil gets extremely low or if the oil pump or oil passages clog up or otherwise do not function properly, the warning indicator light (LED) and oil pressure warning symbol will blink. If this blink stays on when the engine is running above idle speed, stop the engine immediately and find the cause.

★If the oil level is too high, remove the excess oil, using a syringe or some other suitable device.

★If the oil level is too low, add the correct amount of oil through the oil filter opening. Use the same type and make of oil that is already in the engine.

NOTE

○*If the engine oil type and make are unknown, use any brand of the specified oil to top off the level in preference to running the engine with the oil level low. Then at your earliest convenience, change the oil completely.*

Engine Oil Change

- Refer to the Engine Oil Change in the Periodic Maintenance chapter.

Oil Filter Replacement

- Refer to the Oil Filter Replacement in the Periodic Maintenance chapter.

Oil Pan

Oil Pan Removal

- Remove:
  Engine Oil (Drain, see Engine Oil Change in the Periodic Maintenance chapter)
  Exhaust Pipe (see Exhaust Pipe Removal in the Engine Top End chapter)
  Oil Pan Bolts [A] and Clamps
  Oil Pan [B] and Gasket [C]

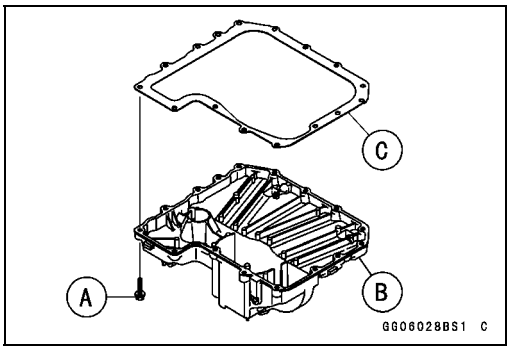

- Remove the oil pipe [A], oil pressure relief valve [B] and oil screen [C] as necessary.

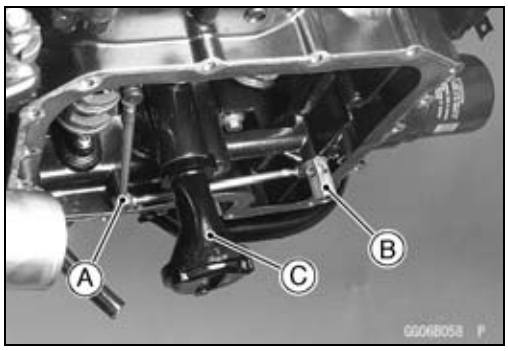

Oil Pan Installation

- Clean the oil screen [A].
- Install the oil screen so that the crankcase rib [B] fits the slot [C] of the oil screen.
- Apply grease to the O-rings on the oil pipe.

★If the oil pressure relief valve was removed, install it.

○Apply a non-permanent locking agent to the threads of the oil pressure relief valve, and tighten it.

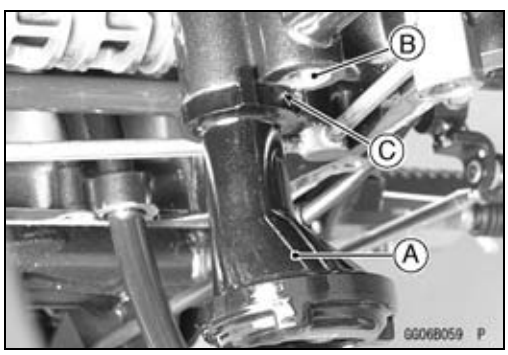

NOTICE
Do not apply too much non-permanent locking agent to the threads. This may block the oil passage.

Torque - Oil Pressure Relief Valve: 15 N·m (1.5 kgf·m, 11 ft·lb)

- Replace the oil pan gasket with a new one.
- Install the clamp [A] at an angle of within 45° [B] as shown in the figure.
- Install the clamp [C] as shown in the figure (Oxygen Sensor Equipped Models).
- Tighten:

  Torque - Oil Pan Bolts [D]: 11 N·m (1.1 kgf·m, 97 in·lb)

- Install the removed parts (see appropriate chapters).

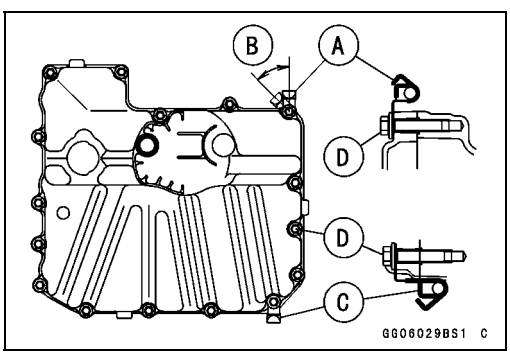

Oil Pressure Relief Valve

Oil Pressure Relief Valve Removal

- Refer to the Oil Pan Removal.

Oil Pressure Relief Valve Installation

- Refer to the Oil Pan Installation.

Oil Pressure Relief Valve Inspection

- Check to see if the valve [A] slides smoothly when pushing it in with a wooden or other soft rod, and see if it comes back to its seat by spring [B] pressure.

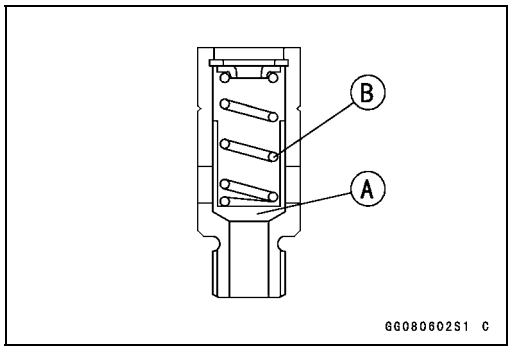

NOTE

○*Inspect the valve in its assembled state. Disassembly and assembly may change the valve performance.*

★If any rough spots are found during above inspection, wash the valve clean with a high-flash point solvent and blow out any foreign particles that may be in the valve with compressed air.

⚠ WARNING

Gasoline and low-flash point solvents can be flammable and/or explosive and cause severe burns. Clean the oil pressure relief valve in a well-ventilated area, and take care that there are no sparks or flame anywhere near the working area; this includes any appliance with a pilot light. Do not use gasoline or a low-flash point solvent to clean the oil pressure relief valve.

★If cleaning does not solve the problem, replace the oil pressure relief valve as an assembly. The oil pressure relief valve is precision made with no allowance for replacement of individual parts.

Oil Pump

Oil Pump Removal

- Remove:
  Coolant (Drain, see Coolant Change in the Periodic Maintenance chapter)
  Engine Oil (Drain, see Engine Oil Change in the Periodic Maintenance chapter)
  Water Pipe Bolts [A]
  Water Pipes [B]

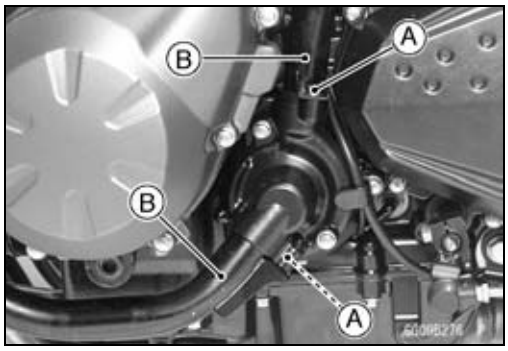

- Remove:
  Water Pump Cover Bolts [A]
  Clamp [B]
  Water Pump Cover [C]

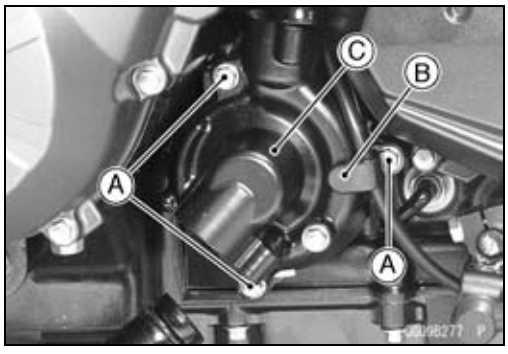

- Remove:
  Impeller Bolt [A]
  Washer
  Impeller [B]
  Water Pump Body
  Oil Pump Cover
  Oil (Water) Pump Shaft
  Outer Rotor and Inner Rotor

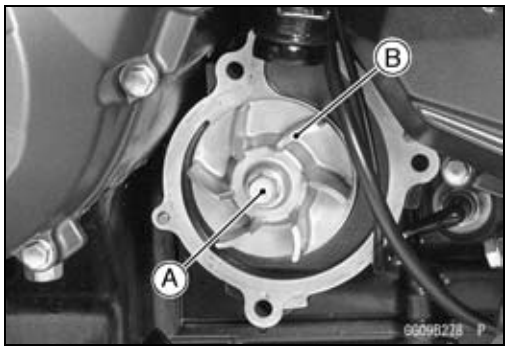

Oil Pump Installation

- Install the outer rotor [A] into the crankcase.
- Install the pin [B], inner rotor [C] and oil (water) pump shaft [D].

○Turn the pump shaft so that the slot [E] in its shaft fits onto the projection [F] of the pump drive gear shaft.

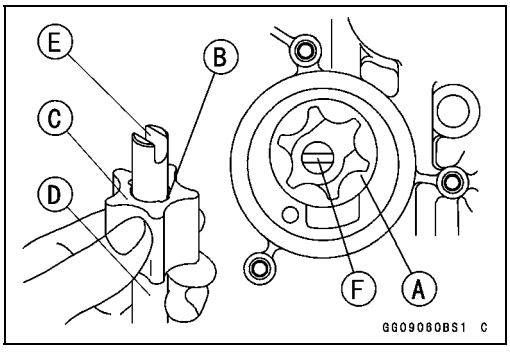

- Fit the pin [A] of the oil pump cover [B] into the hole [C] in the crankcase.

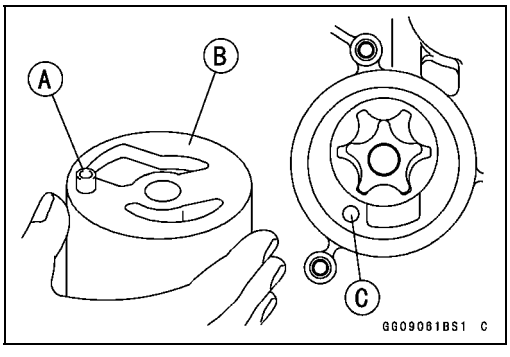

Oil Pump

- Install:
  Pins [A]
  Water Pump Body [B]

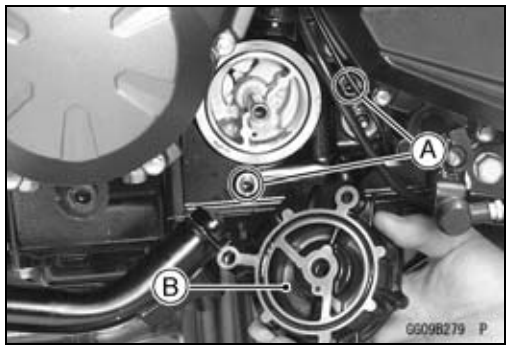

- Install the impeller [A], washer and bolt [B].
- Tighten:

  Torque - Water Pump Impeller Bolt: 9.8 N·m (1.0 kgf·m, 87 in·lb)

- Install the pins [C] and water pump cover.
- Tighten:

  Torque - Water Pump Cover Bolts: 11 N·m (1.1 kgf·m, 97 in·lb)

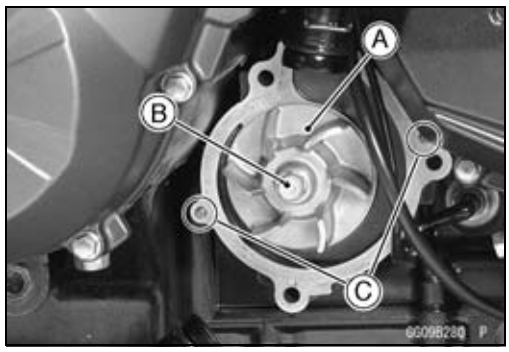

- Install the upper water pipe [A] and lower water pipe [B].

○When installing the lower water pipe, move the front end of the pipe to the engine side so that the radiator hose does not contact the left center fairing.

- Apply a non-permanent locking agent to the threads of the water pipe bolts [C] and tighten them.

  Torque - Water Pipe Bolts: 11 N·m (1.1 kgf·m, 97 in·lb)

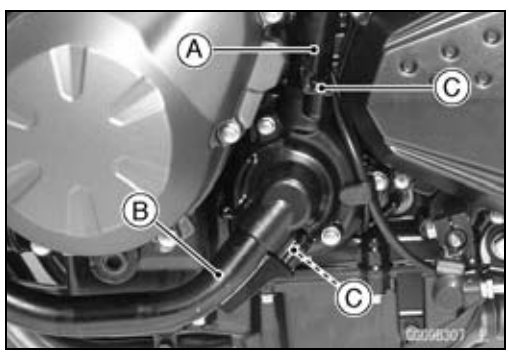

Oil Pump Drive Gear Removal

- Remove:
  Clutch (see Clutch Removal in the Clutch chapter)
  Oil Pan (see Oil Pan Removal)
  Circlip [A] and Washer [B]
  Oil Pump Drive Gear [C] and Washer

  Special Tool - Outside Circlip Pliers: 57001-144

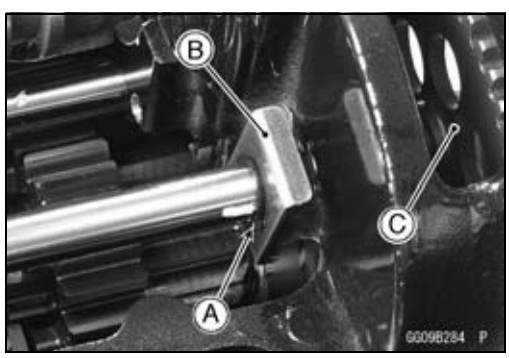

Oil Pump Drive Gear Installation

- Apply molybdenum disulfide oil solution to the journal portions [A] on the oil pump drive gear shaft [B].
- Install the washers [C] [D].
- Install the new circlip [E] into the groove of the oil pump drive gear shaft.

  Special Tool - Outside Circlip Pliers: 57001-144

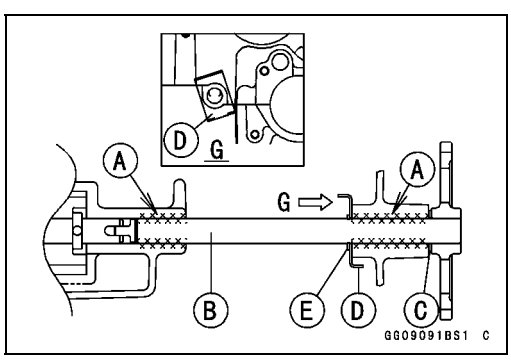

Oil Pressure Measurement

Oil Pressure Measurement

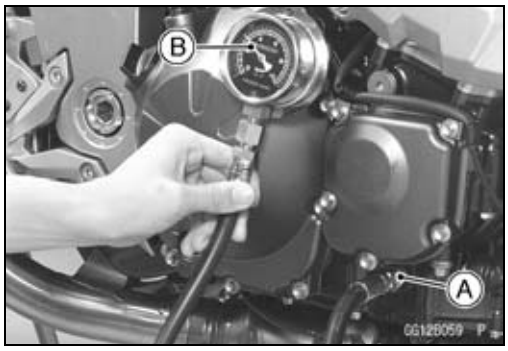

- Remove the oil passage plug, and attach the adapter [A] and gauge [B] to the plug hole.

Special Tools - Oil Pressure Gauge, 10 kgf/cm²: 57001-164
Oil Pressure Gauge Adapter, PT3/8: 57001-1233

- Start the engine and warm up the engine.
- Run the engine at the specified speed, and read the oil pressure gauge.

★If the oil pressure is much lower than the standard, check the oil pump, relief valve, and/or crankshaft bearing insert wear immediately.

★If the reading is much higher than the standard, check the oil passages for clogging.

Oil Pressure
Standard: 147 ~ 226 kPa (1.5 ~ 2.3 kgf/cm², 21 ~ 33 psi) at 4 000 r/min (rpm), Oil Temperature 90°C (194°F)

- Stop the engine.
- Remove the oil pressure gauge and adapter.

⚠ WARNING

Hot oil can cause severe burns. Beware of hot engine oil that will drain through the oil passage when the gauge adapter is removed.

- Apply a non-permanent locking agent to the oil passage plug, and install it.

Torque - Oil Passage Plugs: 20 N·m (2.0 kgf·m, 15 ft·lb)

Oil Pressure Switch

Oil Pressure Switch Removal

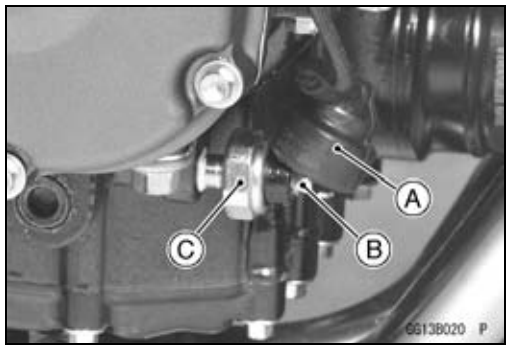

- Remove:
  Engine Oil (Drain, see Engine Oil Change in the Periodic Maintenance chapter)
  Switch Cover [A]
  Switch Terminal Bolt [B]
  Oil Pressure Switch [C]

Oil Pressure Switch Installation

- Using a high-flash point solvent, clean off any oil or dirt that may be on the silicone sealant coating area. Dry them with a clean cloth.
- Apply silicone sealant to the threads of the oil pressure switch and tighten it.

  Sealant - Liquid Gasket, TB1211: 56019-120

  Torque - Oil Pressure Switch: 15 N·m (1.5 kgf·m, 11 ft·lb)
- Install the switch lead direction upward.
- Apply high-temperature grease to the terminal.
- Tighten the terminal bolt.

  Torque - Oil Pressure Switch Terminal Bolt: 2.0 N·m (0.20 kgf·m, 18 in·lb)

Engine Removal/Installation

Table of Contents

Exploded View 8-2
Special Tool 8-4
Engine Removal/Installation 8-5
Engine Removal 8-5
Engine Installation 8-8

Exploded View

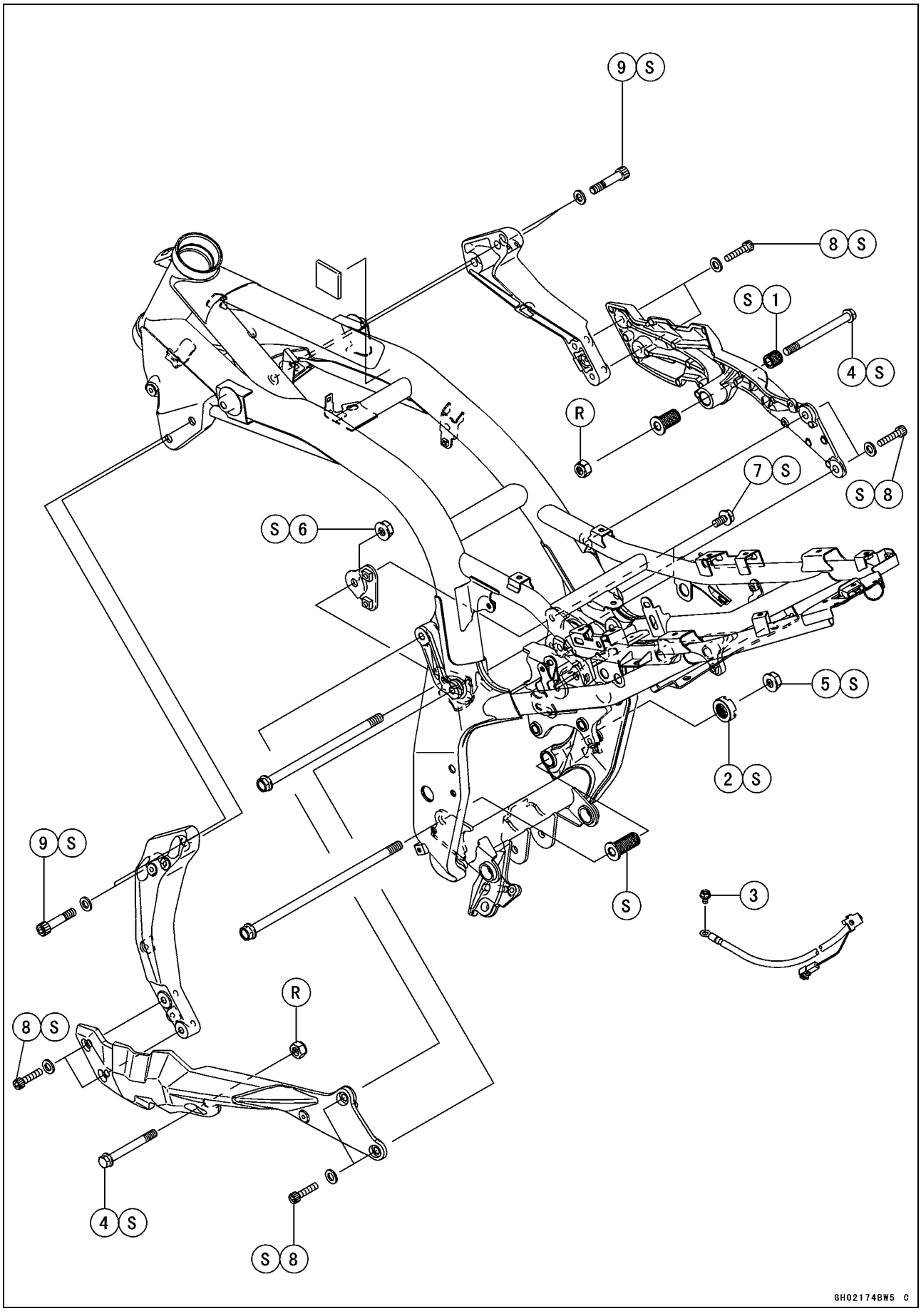

Exploded View

No.	Fastener	Torque			Remarks
		N·m	kgf·m	ft·lb	
1	Adjusting Collar Lock Bolt	34	3.5	25	S
2	Adjusting Collar Locknut	49	5.0	36	S
3	Engine Ground Cable Terminal Bolt	9.8	1.0	87 in·lb	
4	Front Engine Mounting Bolts	44	4.5	32	S
5	Lower Engine Mounting Nut	44	4.5	32	S
6	Middle Engine Mounting Nut	44	4.5	32	S
7	Rear Engine Bracket Bolts	25	2.5	18	S
8	Subframe Bolts	25	2.5	18	S
9	Upper Engine Bracket Bolts	44	4.5	32	S

R: Replacement Parts
S: Follow the specified tightening sequence.

Special Tool

Engine Mount Nut Wrench:
57001-1450

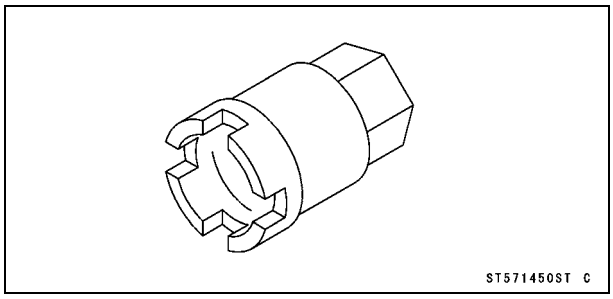

Engine Removal/Installation

Engine Removal

- Support the rear part of the swingarm with a stand.
- Squeeze the brake lever slowly and hold it with a band [A].

⚠ WARNING

Motorcycle may fall over unexpectedly resulting in an accident or injury. Be sure to hold the front brake when removing the engine.

NOTICE

Be sure to hold the front brake when removing the engine, or the motorcycle may fall over. The engine or the motorcycle could be damaged.

NOTE

○*Hold the mounting bolt at the right side of the frame not to turn when loosening the upper and lower engine mounting nuts at the left side of the frame.*

- Remove:
  Engine Oil (Drain, see Engine Oil Change in the Periodic Maintenance chapter)
  Coolant (Drain, see Coolant Change in the Periodic Maintenance chapter)
  Center Fairings (see Center Fairing Removal in the Frame chapter)
  Side Covers (see Side Cover Removal in the Frame chapter)
  Frame Covers (see Frame Cover Removal in the Frame chapter)
  Fuel Tank (see Fuel Tank Removal in the Fuel System (DFI) chapter)
  Clutch Cable Lower End (see Clutch Cable Removal in the Clutch chapter)
  Thermostat Housing (see Thermostat Removal in the Cooling System chapter)
  Radiator (see Radiator and Radiator Fan Removal in the Cooling System chapter)
  Air Switching Valve (see Air Switching Valve Removal in the Engine Top End chapter)
  Throttle Body Assy (see Throttle Body Assy Removal in the Fuel System (DFI) chapter)
  Shift Lever (see Shift Pedal Removal in the Crankshaft/Transmission chapter)

Engine Removal/Installation

- Remove:
  Quick Rivets [A]
  Exhaust Pipe (see Exhaust Pipe Removal in the Engine Top End chapter)

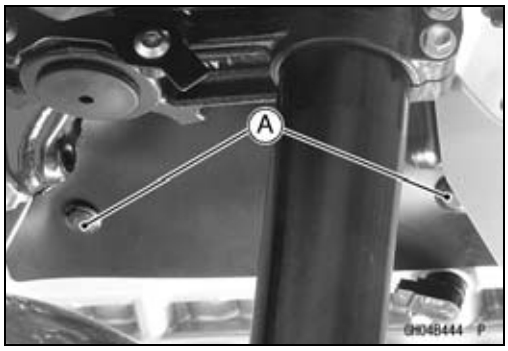

- Disconnect:
  Stick Coil Harness Connector [A]
  Camshaft Position Sensor Lead Connector (see Camshaft Position Sensor Removal in the Electrical System chapter)

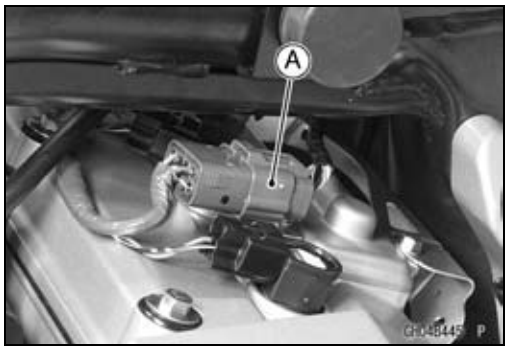

- Disconnect:
  Starter Motor Cable (see Starter Motor Removal in the Electrical System chapter)
  Alternator Lead Connector (see Alternator Cover Removal in the Electrical System chapter)
  Crankshaft Sensor Lead Connector (see Crankshaft Sensor Removal in the Electrical System chapter)
  Neutral Switch Lead Connector [A]
  Sidestand Switch Lead Connector [B]
  Speed Sensor Lead Connector [C]
- Remove the engine sprocket (see Engine Sprocket Removal in the Final Drive chapter).

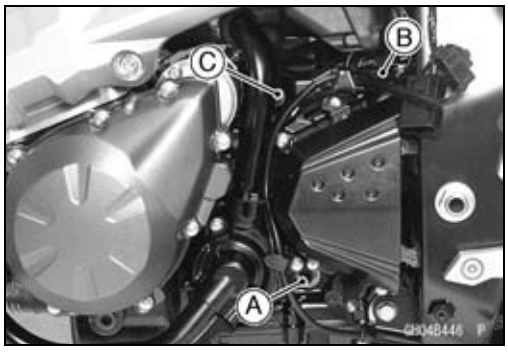

- Remove:
  Breather Hose End [A]
  Engine Ground Cable Terminal Bolt [B]

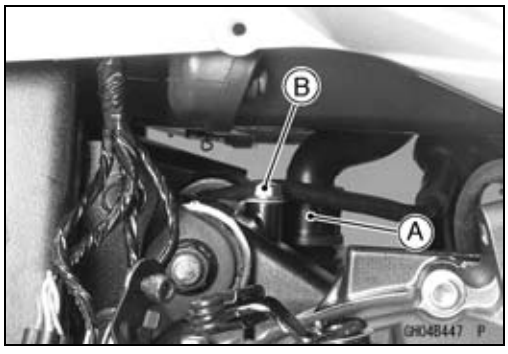

Engine Removal/Installation

● Support the engine with a suitable stand [A].
○Put a plank [B] onto the suitable stand for engine balance.

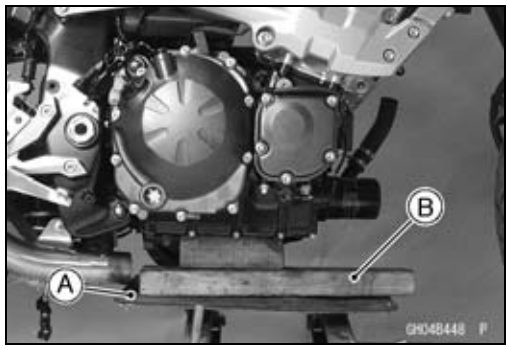

● Remove:
Front Engine Mounting Bolts [A] (Both Sides)
Adjusting Collar Lock Bolt
Subframe Bolts [B] (Both Sides)
Upper Engine Bracket Bolts [C] (Both Sides)
Subframes [D] (Both Sides)
Middle Engine Mounting Nut [E] and Bolt
Lower Engine Mounting Nut [F] and Bolt
Rear Engine Bracket Bolts [G]
Rear Engine Bracket [H]

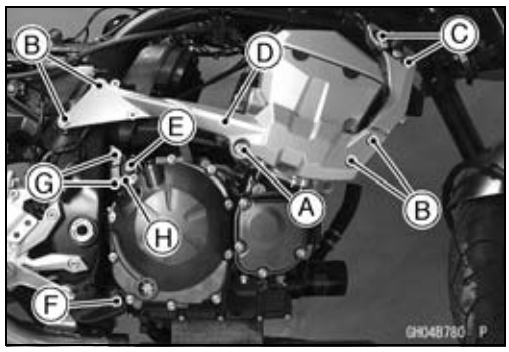

● Using the nut wrench [A], loosen the locknut [B].
Special Tool - Engine Mount Nut Wrench: 57001-1450

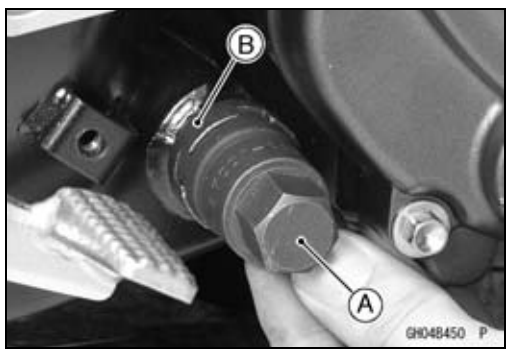

● Using the Hexagon Wrench, turn the adjusting collar [A] counterclockwise to make the gap between the engine and adjusting collar.

● Remove the drive chain [A] from the output shaft [B].
● Using the stand, take out the engine.

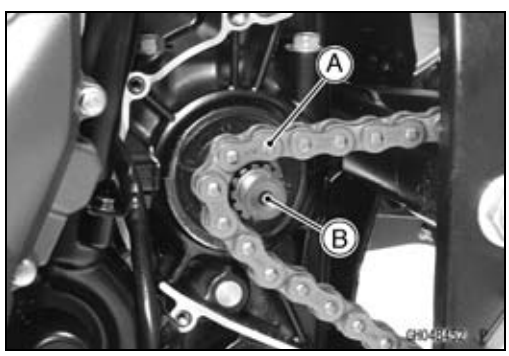

Engine Removal/Installation

Engine Installation

- Support the engine with a suitable stand.

○Put a plank onto the suitable stand for engine balance.

- Screw the adjusting collar [A] to the frame.
- Screw the adjusting collar [B] to the subframe.

NOTE

○*Hold the mounting bolt at the right side of the frame not to turn when tightening the upper and lower engine mounting nuts at the left side of the frame.*

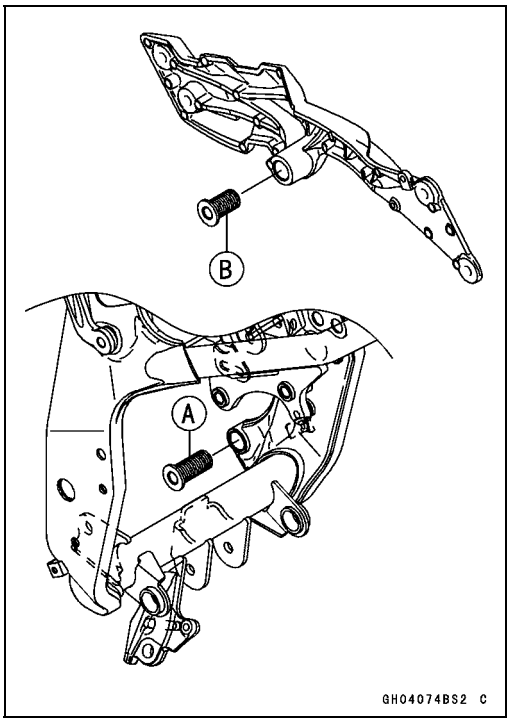

Engine Removal/Installation

- Replace the front engine mounting nuts with new ones.
- Install the engine mounting bolts and nuts, following the specified installing sequence.

○First, hang the drive chain over the output shaft just before moving the engine into its final position in the frame.
○Second, install the rear engine bracket [A] and tighten the bolts [B] temporarily.
○Third, install the left upper engine bracket [C] and left subframe [D] and tighten the bolts [E] [F] [G].
○Fourth, insert the lower [H] and middle [I] engine mounting bolts.
○Fifth, tighten the left front engine mounting bolt [J].
○Sixth, tighten the rear engine bracket bolts [B].
○Seventh, tighten the adjusting collar [K] until the clearance between the crankcase and frame come to 0 mm.
○Eighth, tighten the adjusting collar locknut [L].
○Ninth, tighten the lower [M] and middle [N] engine mounting nuts.
○Tenth, install the right upper engine bracket [O] and right subframe [P] and tighten the bolts [Q] [R] [S] temporarily.
○Eleventh, insert the right front engine mounting bolt [V] in the right subframe.
○Twelfth, first tighten the right subframe bolts (rear).
Right Subframe Bolts (Rear) [S]
Right Subframe Bolts (Front) [R]
Right Upper Engine Bracket Bolts [Q]
○Thirteenth, remove the right front engine mounting bolt in the right subframe.
○Fourteenth, tighten the adjusting collar [T] until the clearance between the engine and subframe come to 0 mm.
○Fifteenth, tighten the adjusting collar lock bolt [U] securely.

Torque - Adjusting Collar Lock Bolt: 34 N·m (3.5 kgf·m, 25 ft·lb)

○Sixteenth, tighten the right front engine mounting bolt.
○Lastly, tighten the locknut, nuts and bolts securely.

Torque - Adjusting Collar Locknut [L]: 49 N·m (5.0 kgf·m, 36 ft·lb)
Lower Engine Mounting Nut [M]: 44 N·m (4.5 kgf·m, 32 ft·lb)
Rear Engine Bracket Bolts [B]: 25 N·m (2.5 kgf·m, 18 ft·lb)
Middle Engine Mounting Nut [N]: 44 N·m (4.5 kgf·m, 32 ft·lb)
Subframe Bolts [E] [F] [R] [S]: 25 N·m (2.5 kgf·m, 18 ft·lb)
Upper Engine Bracket Bolts [G] [Q]: 44 N·m (4.5 kgf·m, 32 ft·lb)
Front Engine Mounting Bolts [J] [V] :44 N·m (4.5 kgf·m, 32 ft·lb)

Engine Removal/Installation

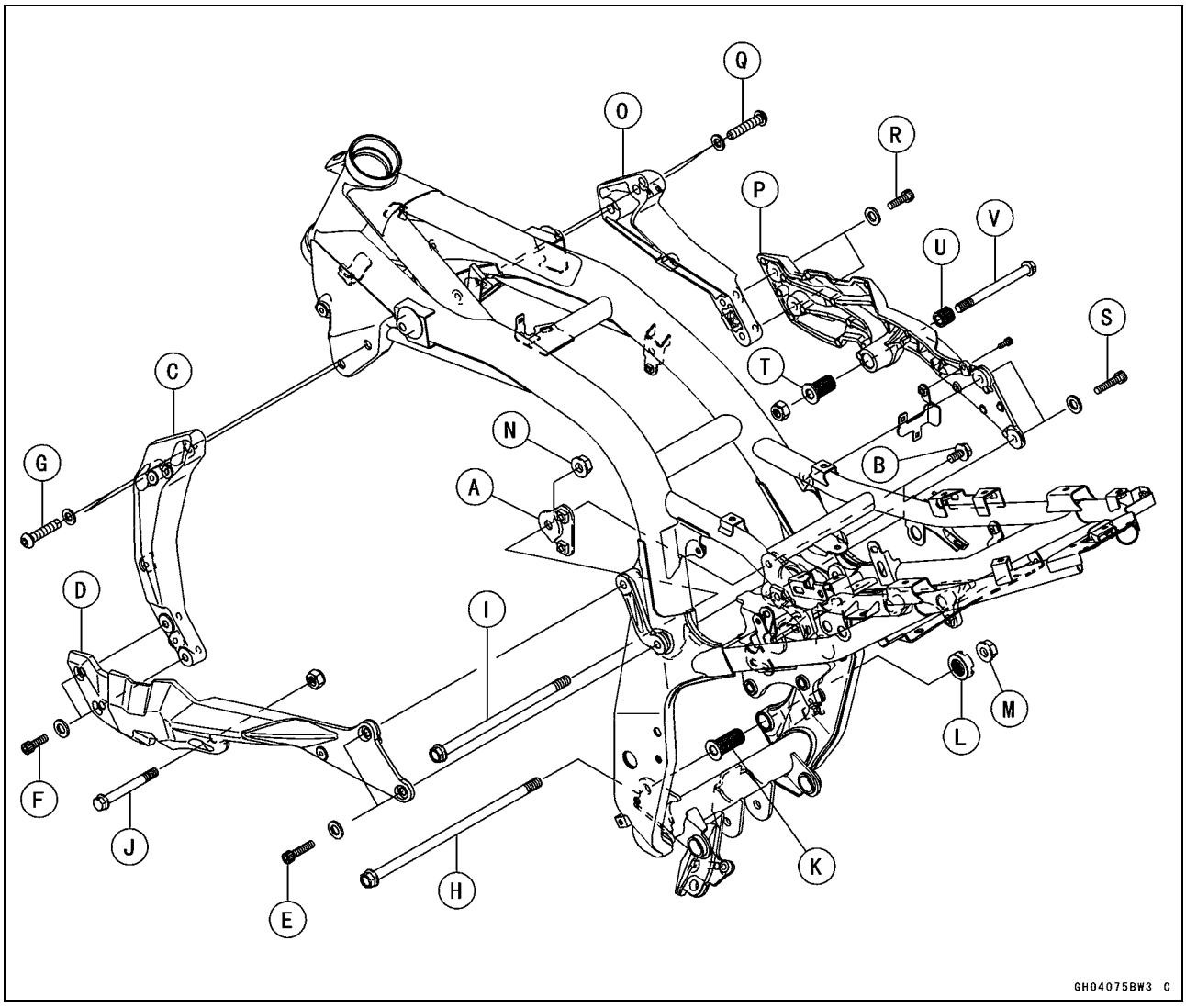

- Run the leads, cables and hoses correctly (see Cable, Wire, and Hose Routing section in the Appendix chapter).
- Install the removed parts (see appropriate chapters).

Torque - Engine Ground Cable Terminal Bolt: 9.8 N·m (1.0 kgf·m, 87 in·lb)

- Adjust:
  Throttle Cables (see Throttle Control System Inspection in the Periodic Maintenance chapter)
  Clutch Cable (see Clutch Operation Inspection in the Periodic Maintenance chapter)
  Drive Chain (see Drive Chain Slack Inspection in the Periodic Maintenance chapter)
- Fill the engine with engine oil (see Engine Oil Change in the Periodic Maintenance chapter).
- Fill the engine with coolant (see Coolant Change in the Periodic Maintenance chapter).

Crankshaft/Transmission

Table of Contents

Exploded View 9-2
Specifications 9-6
Special Tools and Sealant 9-8
Crankcase Splitting 9-9
  Crankcase Splitting 9-9
  Crankcase Assembly 9-9
Crankshaft and Connecting Rods 9-14
  Crankshaft Removal 9-14
  Crankshaft Installation 9-14
  Connecting Rod Removal 9-14
  Connecting Rod Installation 9-14
  Crankshaft/Connecting Rod Cleaning 9-18
  Connecting Rod Bend Inspection 9-18
  Connecting Rod Twist Inspection 9-18
  Connecting Rod Big End Side Clearance Inspection 9-18
  Connecting Rod Big End Bearing Insert/Crankpin Wear Inspection 9-19
  Crankshaft Side Clearance Inspection 9-20
  Crankshaft Runout Inspection 9-21
  Crankshaft Main Bearing Insert/Journal Wear Inspection 9-21
Starter Motor Clutch 9-23
  Starter Motor Clutch Removal/Installation 9-23
  Starter Motor Clutch Inspection 9-23
  Starter Motor Clutch Disassembly 9-23
  Starter Motor Clutch Assembly 9-23
Transmission 9-24
  Shift Pedal Removal 9-24
  Shift Pedal Installation 9-24
  External Shift Mechanism Removal 9-25
  External Shift Mechanism Installation 9-26
  External Shift Mechanism Inspection 9-26
  Transmission Shaft Removal 9-27
  Transmission Shaft Installation 9-27
  Transmission Shaft Disassembly 9-27
  Transmission Shaft Assembly 9-28
  Shift Drum and Fork Removal 9-31
  Shift Drum and Fork Installation 9-31
  Shift Drum Disassembly 9-31
  Shift Drum Assembly 9-31
  Shift Fork Bending Inspection 9-32
  Shift Fork/Gear Groove Wear Inspection 9-32
  Shift Fork Guide Pin/Drum Groove Wear Inspection 9-32
  Gear Dog and Gear Dog Hole Damage Inspection 9-32

Exploded View

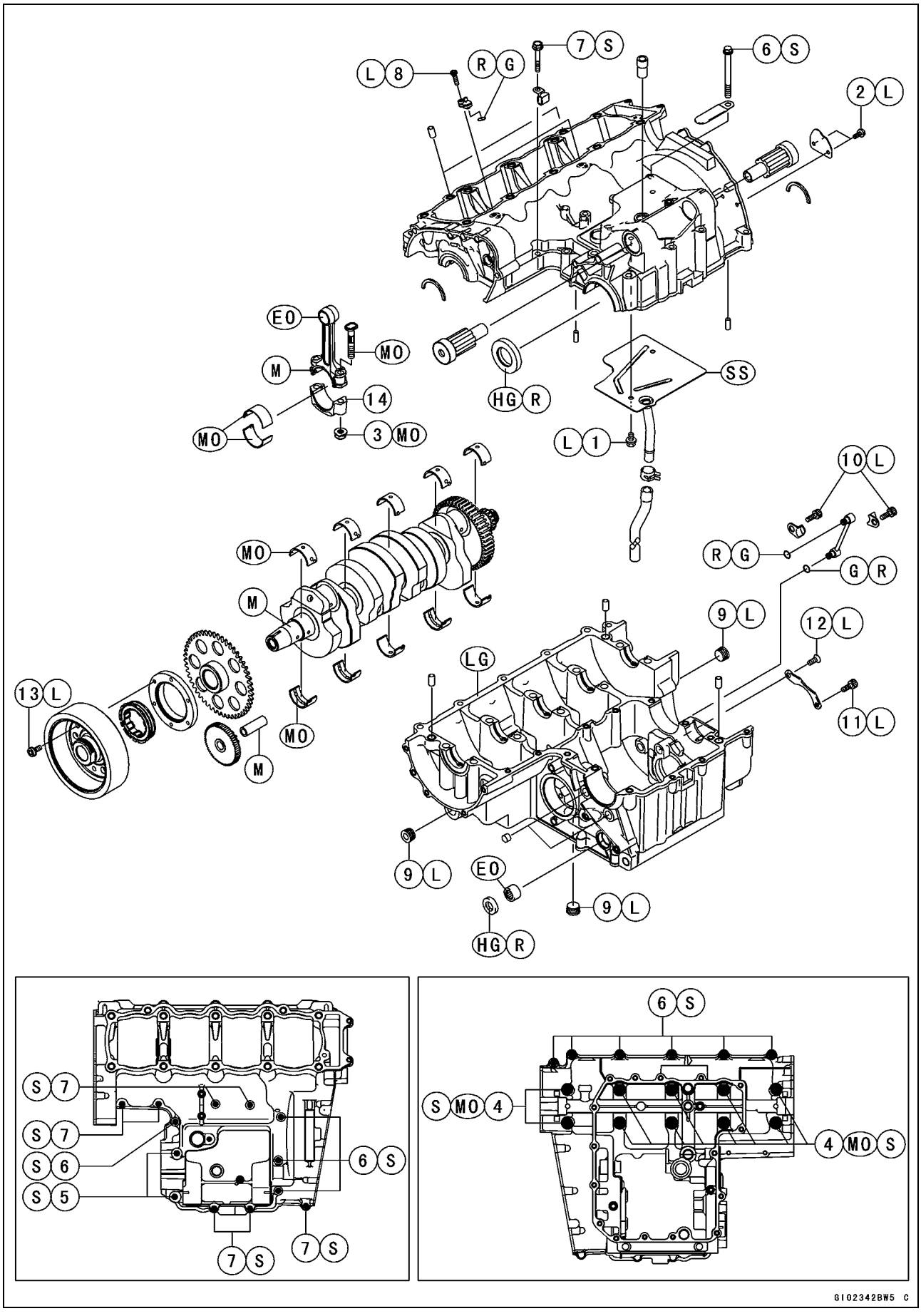

Exploded View

No.	Fastener	Torque			Remarks
		N·m	kgf·m	ft·lb	
1	Breather Plate Bolts (M6)	9.8	1.0	87 in·lb	L
2	Breather Plate Bolts (M5)	5.9	0.60	52 in·lb	L
3	Connecting Rod Big End Nuts	see the text	←	←	MO
4	Crankcase Bolts (M9)	42	4.3	31	MO, S
5	Crankcase Bolts (M8)	27	2.8	20	S
6	Crankcase Bolts (M7)	20	2.0	15	S
7	Crankcase Bolts (M6)	12	1.2	106 in·lb	S
8	Oil Jet Nozzle Bolts	6.9	0.70	61 in·lb	L
9	Oil Passage Plugs	20	2.0	15	L
10	Oil Pipe Holder Bolts	13	1.3	115 in·lb	L
11	Shift Drum Bearing Holder Bolt	13	1.3	115 in·lb	L
12	Shift Drum Bearing Holder Screw	5.9	0.60	52 in·lb	L
13	Starter Motor Clutch Bolts	12	1.2	106 in·lb	L

14. Do not apply any grease or oil.
EO: Apply engine oil.
G: Apply grease.
HG: Apply high-temperature grease.
L: Apply a non-permanent locking agent.
LG: Apply liquid gasket.
M: Apply molybdenum disulfide grease.
MO: Apply molybdenum disulfide oil solution.
(mixture of the engine oil and molybdenum disulfide grease in a weight ratio 10:1)
R: Replacement Parts
S: Follow the specified tightening sequence.
SS: Apply silicone sealant.

Exploded View

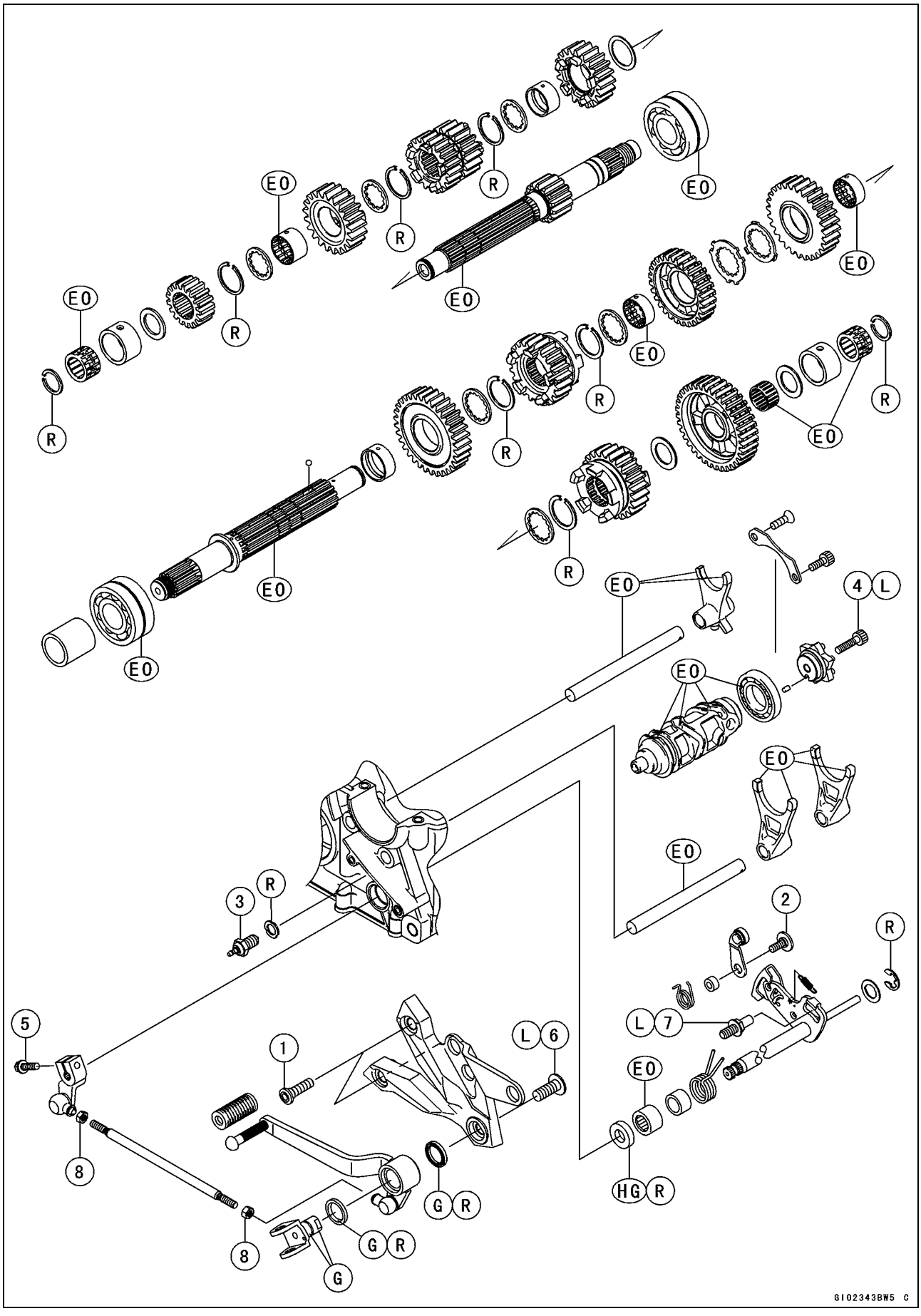

Exploded View

No.	Fastener	Torque			Remarks
		N·m	kgf·m	ft·lb	
1	Front Footpeg Bracket Bolts	25	2.5	18	
2	Gear Positioning Lever Bolt	12	1.2	106 in·lb	
3	Neutral Switch	15	1.5	11	
4	Shift Drum Cam Holder Bolt	12	1.2	106 in·lb	L
5	Shift Lever Bolt	6.9	0.70	61 in·lb	
6	Shift Pedal Mounting Bolt	34	3.5	25	L
7	Shift Shaft Return Spring Pin	29	3.0	21	L
8	Tie-Rod Locknuts	6.9	0.70	61 in·lb	

EO: Apply engine oil.
G: Apply grease.
HG: Apply high-temperature grease.
L: Apply a non-permanent locking agent.
R: Replacement Parts

Specifications

Item	Standard	Service Limit
Crankshaft, Connecting Rods		
Connecting Rod Bend	– – –	TIR 0.2/100 mm (0.008/3.94 in.)
Connecting Rod Twist	– – –	TIR 0.2/100 mm (0.008/3.94 in.)
Connecting Rod Big End Side Clearance	0.13 ~ 0.38 mm (0.0051 ~ 0.0150 in.)	0.58 mm (0.023 in.)
Connecting Rod Big End Bearing Insert/Crankpin Clearance	0.041 ~ 0.071 mm (0.0016 ~ 0.0028 in.)	0.11 mm (0.0043 in.)
Crankpin Diameter:	34.984 ~ 35.000 mm (1.3773 ~ 1.3780 in.)	34.97 mm (1.3768 in.)
Marking None	34.984 ~ 34.992 mm (1.3773 ~ 1.3776 in.)	– – –
○	34.993 ~ 35.000 mm (1.3777 ~ 1.3780 in.)	– – –
Connecting Rod Big End Inside Diameter:	38.000 ~ 38.016 mm (1.4961 ~ 1.4967 in.)	– – –
Marking None	38.000 ~ 38.008 mm (1.4961 ~ 1.4964 in.)	– – –
○	38.009 ~ 38.016 mm (1.4964 ~ 1.4967 in.)	– – –
Connecting Rod Big End Bearing Insert Thickness:		
Brown	1.475 ~ 1.480 mm (0.05807 ~ 0.05827 in.)	– – –
Black	1.480 ~ 1.485 mm (0.05827 ~ 0.05846 in.)	– – –
Blue	1.485 ~ 1.490 mm (0.05846 ~ 0.05866 in.)	– – –

Connecting Rod Big End Bearing Insert Selection:

Con-rod Big End Inside Diameter Marking	Crankpin Diameter Marking	Bearing Insert	
		Size Color	Part Number
None	○	Brown	92139-1110
None	None	Black	92139-1109
○	○		
○	None	Blue	92139-1108

Connecting Rod Bolt Stretch:	(Usable Range)	
New Connecting Rod	0.24 ~ 0.36 mm (0.0094 ~ 0.0142 in.)	– – –
Used Connecting Rod	0.20 ~ 0.32 mm (0.0079 ~ 0.0126 in.)	– – –
Crankshaft Side Clearance	0.05 ~ 0.20 mm (0.0020 ~ 0.0079 in.)	0.40 mm (0.0157 in.)
Crankshaft Runout	TIR 0.02 mm (0.0008 in.) or less	TIR 0.05 mm (0.0020 in.)

Specifications

Item		Standard	Service Limit
Crankshaft Main Bearing Insert/Journal Clearance		0.020 ~ 0.044 mm (0.0008 ~ 0.0017 in.)	0.07 mm (0.0028 in.)
Crankshaft Main Journal Diameter:		32.984 ~ 33.000 mm (1.2986 ~ 1.2992 in.)	32.96 mm (1.2976 in.)
Marking	None	32.984 ~ 32.992 mm (1.2986 ~ 1.2989 in.)	– – –
	1	32.993 ~ 33.000 mm (1.2989 ~ 1.2992 in.)	– – –
Crankcase Main Bearing Inside Diameter:		36.000 ~ 36.016 mm (1.4173 ~ 1.4179 in.)	– – –
Marking	○	36.000 ~ 36.008 mm (1.4173 ~ 1.4176 in.)	– – –
	None	36.009 ~ 36.016 mm (1.4177 ~ 1.4179 in.)	– – –
Crankshaft Main Bearing Insert Thickness:			
	Brown	1.490 ~ 1.494 mm (0.0587 ~ 0.0588 in.)	– – –
	Black	1.494 ~ 1.498 mm (0.0588 ~ 0.0590 in.)	– – –
	Blue	1.498 ~ 1.502 mm (0.0590 ~ 0.0591 in.)	– – –

Crankshaft Main Bearing Insert Selection:

Crankcase Main Bearing Inside Diameter Marking	Crankshaft Main Journal Diameter Marking	Bearing Insert*		
		Size Color	Part Number	Journal Nos.
○	1	Brown	92028-1868	3, 5
			92028-1829	1, 2, 4
None	1	Black	92028-1867	3, 5
○	None		92028-1828	1, 2, 4
None	None	Blue	92028-1866	3, 5
			92028-1827	1, 2, 4

*The bearing inserts for Nos. 1, 2 and 4 journals have an oil groove, respectively.

Transmission		
Shift Fork Ear Thickness	5.9 ~ 6.0 mm (0.232 ~ 0.236 in.)	5.8 mm (0.228 in.)
Gear Groove Width	6.05 ~ 6.15 mm (0.238 ~ 0.242 in.)	6.25 mm (0.246 in.)
Shift Fork Guide Pin Diameter	6.9 ~ 7.0 mm (0.272 ~ 0.276 in.)	6.8 mm (0.268 in.)
Shift Drum Groove Width	7.05 ~ 7.20 mm (0.278 ~ 0.283 in.)	7.3 mm (0.287 in.)

Special Tools and Sealant

Bearing Puller:
57001-135

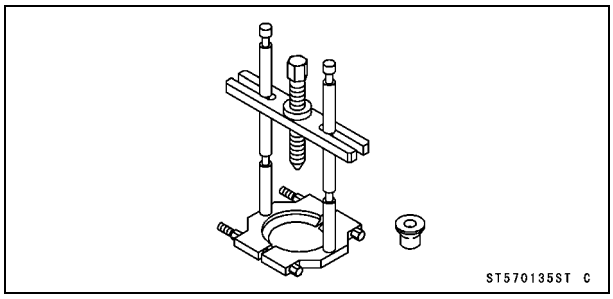

Outside Circlip Pliers:
57001-144

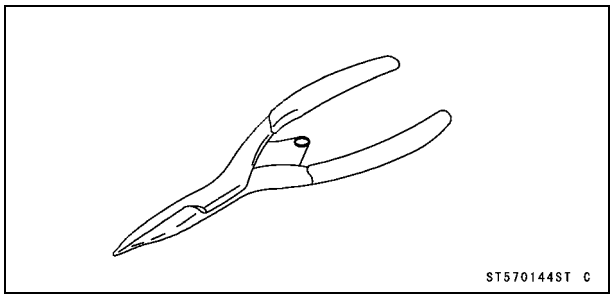

Bearing Puller Adapter:
57001-317

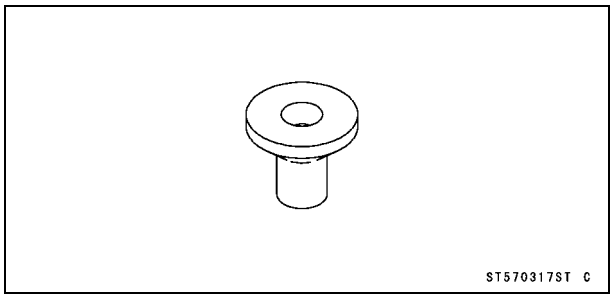

Liquid Gasket, TB1215B:
92104-1062

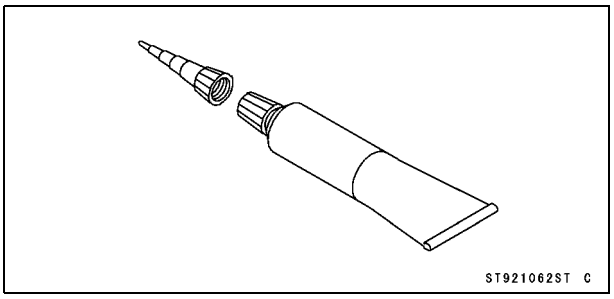

Liquid Gasket, TB1207B:
92104-2068

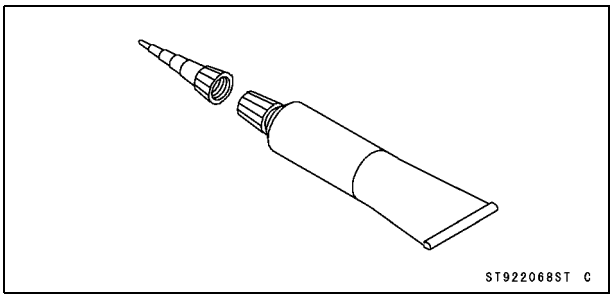

Crankcase Splitting

Crankcase Splitting

- Remove the engine (see Engine Removal in the Engine Removal/Installation chapter).
- Set the engine on a clean surface and hold the engine steady while parts are being removed.
- Remove:
  Crankshaft Sensor (see Crankshaft Sensor Removal in the Electrical System chapter)
  Clutch (see Clutch Removal in the Clutch chapter)
  External Shift Mechanism (see External Shift Mechanism Removal)
  Starter Motor (see Starter Motor Removal in the Electrical System chapter)
  Oil Pump (see Oil Pump Removal in the Engine Lubrication System chapter)
  Alternator Rotor (see Alternator Rotor Removal in the Electrical System chapter)
  Oil Filter (see Oil Filter Replacement in the Periodic Maintenance chapter)
  Oil Pan (see Oil Pan Removal in the Engine Lubrication System chapter)

★If the crankshaft is to be removed, remove the pistons (see Piston Removal in the Engine Top End chapter).

- Remove the upper crankcase bolts.

○First loosen the M6 bolts.
  M6 Bolts [A]
  M7 Bolts [B]
  M8 Bolts [C]

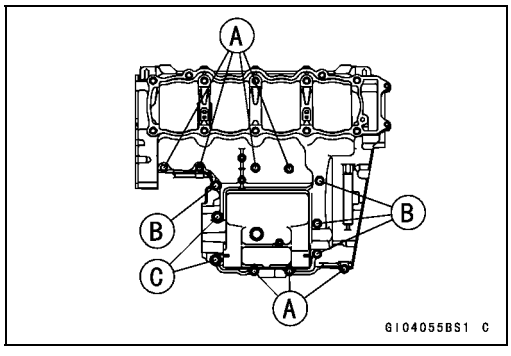

- Remove the lower crankcase bolts.

○First loosen the M7 bolts.
  M7 Bolts [A]
  M9 Bolts [B]

- Tap lightly around the crankcase mating surface with a plastic mallet, and split the crankcase. Take care not to damage the crankcase.

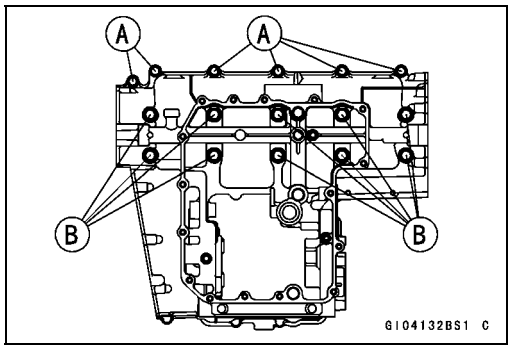

Crankcase Assembly

NOTICE

The upper and lower crankcase halves are machined at the factory in the assembled state, so the crankcase halves must be replaced as a set.

- With a high-flash point solvent, clean off the mating surfaces of the crankcase halves and wipe dry.
- Using compressed air, blow out the oil passages in the crankcase halves.

Crankcase Splitting

- Using a high-flash point solvent, clean off any oil or dirt that may be on the liquid gasket coating area. Dry them with a clean cloth.
- Apply liquid gasket to the breather plate mating surface [A] 1 mm (0.04 in.) or more thick, and then install the breather plate.
  22 mm (0.87 in.) [B]

  Sealant - Liquid Gasket, TB1207B: 92104-2068

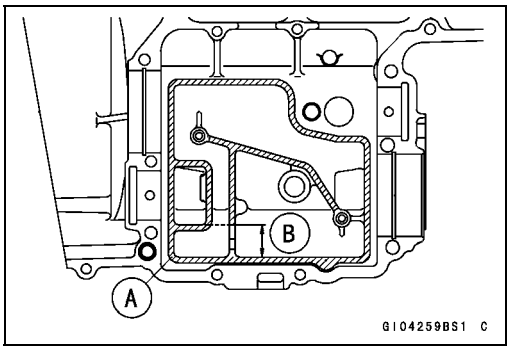

NOTE

○*Make the application finish within 7 minutes when the liquid gasket to the mating surface of the breather plate is applied.*

○*Moreover fit the plate and tighten the bolts just after application of the liquid gasket.*

- Apply a non-permanent locking agent to the threads of the breather plate bolts [A] and tighten them.

  Torque - Breather Plate Bolts (M6): 9.8 N·m (1.0 kgf·m, 87 in·lb)

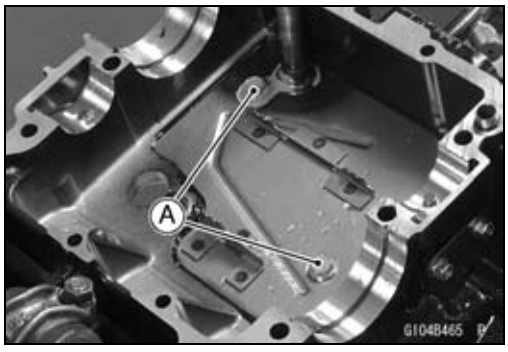

- Install the breather hose [A].

○Align the white mark on the hose with the white mark on the pipe.

○Install the clamp [B] so that its head faces to right side.
  Breather Plate [C]

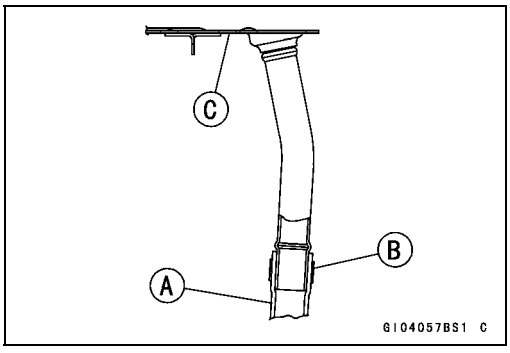

Crankcase Splitting

- Apply grease to the O-rings [A].
- Install the oil jet nozzles [B].
- Apply a non-permanent locking agent to the threads of oil jet nozzle bolts [C].
- Tighten:

  Torque - Oil Jet Nozzle Bolts: 6.9 N·m (0.70 kgf·m, 61 in·lb)

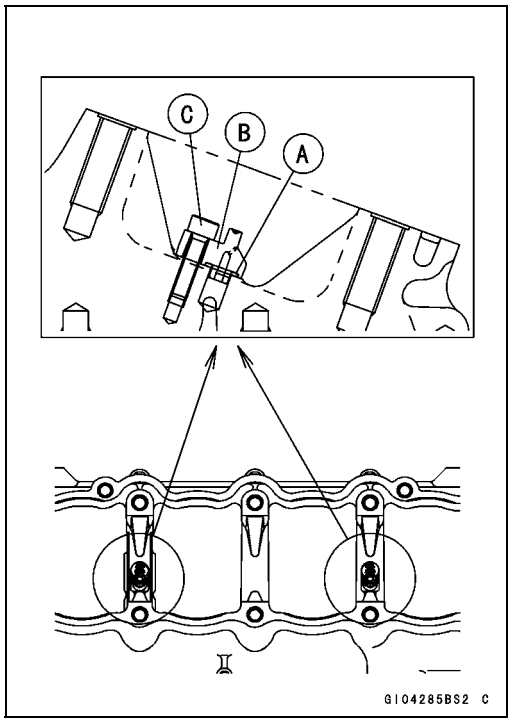

- Install:
  Crankshaft (see Crankshaft Installation)
  Connecting Rods (see Connecting Rod Installation)
  Camshaft Chain [A]
  Transmission Shafts and Gears (see Transmission Shaft Installation)
  Dowel Pins [B]
  Shift Drum (see Shift Drum and Fork Installation)
  Shift Forks and Shift Rods (see Shift Drum and Fork Installation)
- Before fitting the lower case on the upper case, check the following.

○Be sure to hang the camshaft chain on the crankshaft.
○Check to see that the shift drum and transmission gears are in the neutral position.

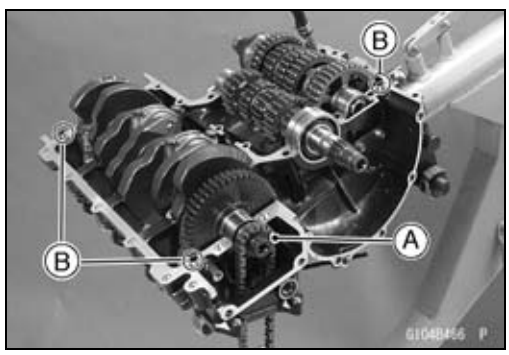

Crankcase Splitting

- Using a high-flash point solvent, clean off any oil or dirt that may be on the liquid gasket coating area. Dry them with a clean cloth.
- Apply liquid gasket [A] to the mating surface of the lower crankcase half.

Sealant - Liquid Gasket, TB1215B: 92104-1062

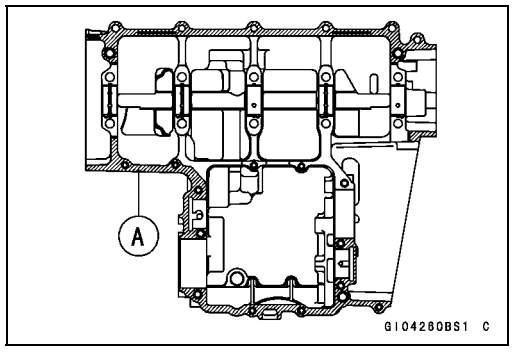

NOTE

○*Especially, apply a sealant so that it shall be filled up on the grooves.*

NOTICE

Do not apply liquid gasket around the crankshaft main bearing inserts, and oil passage holes.

- Fit the lower crankcase to the upper crankcase.

NOTE

○*Make the application finish within 60 minutes when the liquid gasket to the mating surface of the crankcase half is applied.*

○*Moreover fit the case and tighten the bolts just after application of the liquid gasket.*

- The M9 bolts (L = 95 mm, 3.74 in.) [A] has a copper plated washer [B], replace it with a new one.
- Apply molybdenum disulfide oil solution to the seating surface [C] on the lower crankcase for the M9 bolts (L = 95 mm, 3.74 in.).

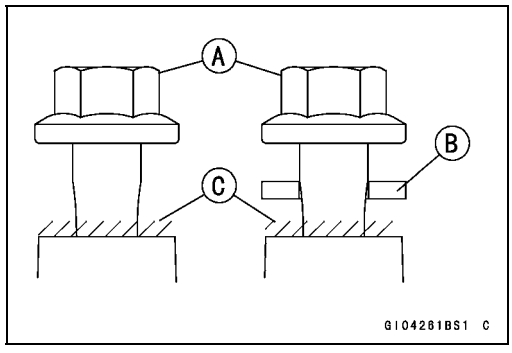

- Tighten the lower crankcase bolts using the following steps.

○Following the sequence numbers on the lower crankcase half, tighten the M9 bolts [1 ~ 6] L= 81 mm (3.19 in.).

Torque - Crankcase Bolts (M9): 42 N·m (4.3 kgf·m, 31 ft·lb)

○Tighten the M9 bolts [7 ~ 10] L= 95 mm (3.74 in.) with copper plated washers.

Torque - Crankcase Bolts (M9): 42 N·m (4.3 kgf·m, 31 ft·lb)

○Tighten the M7 bolts [A].

Torque - Crankcase Bolts (M7): 20 N·m (2.0 kgf·m, 15 ft·lb)

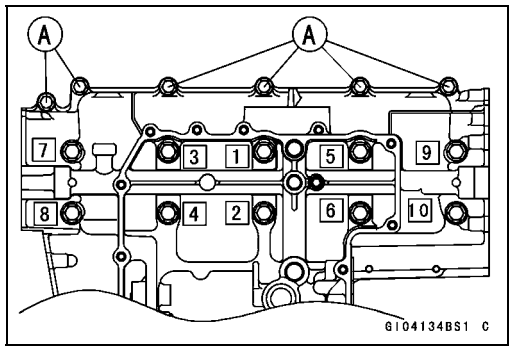

Crankcase Splitting

- Tighten the upper crankcase bolts in the order listed.

Torque - Crankcase Bolts (M8) [A]: 27 N·m (2.8 kgf·m, 20 ft·lb)

Crankcase Bolts (M7): 20 N·m (2.0 kgf·m, 15 ft·lb)

L= 85 mm (3.35 in.) [B]

L= 50 mm (1.97 in.) [C]

Crankcase Bolts (M6): 12 N·m (1.2 kgf·m, 106 in·lb)

L= 90 mm (3.54 in.) [D]

L= 60 mm (2.36 in.) [E]

L= 40 mm (1.57 in.) [F]

Clamps [G]

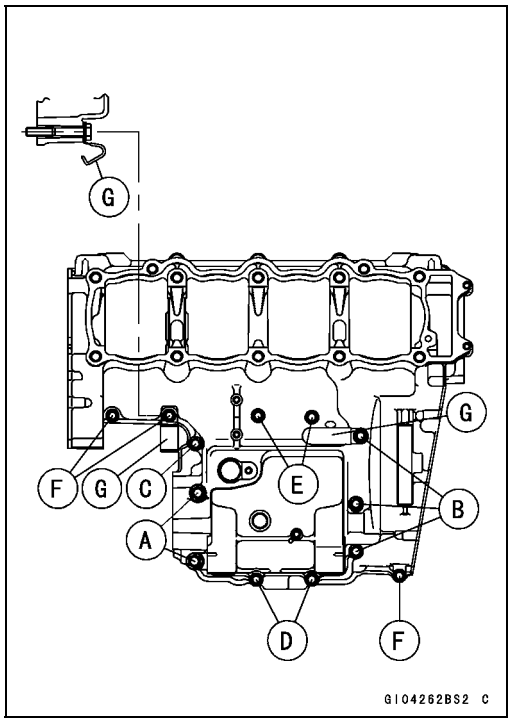

- After tightening all crankcase bolts, check the following items.

○Wipe up the liquid gasket that seeps out around the crankcase mating surface.

○Crankshaft and transmission shafts turn freely.

○While spinning the output shaft, gears shift smoothly from the 1st to 6th gear, and 6th to 1st.

○When the output shaft stays still, the gear can not be shifted to 2nd gear or other higher gear positions.

- Install the removed parts (see appropriate chapters).

Crankshaft and Connecting Rods

Crankshaft Removal

- Split the crankcase (see Crankcase Splitting).
- Remove the crankshaft [A].

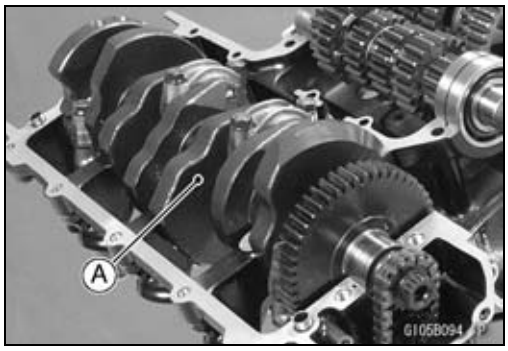

Crankshaft Installation

NOTICE

If the crankshaft, bearing inserts, or crankcase halves are replaced with new ones, select the bearing inserts and check clearance with a plastigage (press gauge) before assembling engine to be sure the correct bearing inserts are installed.

- Apply molybdenum disulfide oil solution to the crankshaft main bearing inserts.
- Install the crankshaft with the camshaft chain [A] hanging on it.

Connecting Rod Removal

- Split the crankcase (see Crankcase Splitting).
- Remove the connecting rod big end nuts [A].
- Remove the crankshaft.

NOTE

○*Mark and record the locations of the connecting rods and their big end caps so that they can be reassembled in their original positions.*

- Remove the connecting rods from the crankshaft.

NOTICE

Discard the connecting rod bolts. To prevent damage to the crankpin surfaces, do not allow the connecting rod bolts to bump against the crankpins.

Connecting Rod Installation

NOTICE

To minimize vibration, the connecting rods should have the same weight mark.

Big End Cap [A]
Connecting Rod [B]
Weight Mark, Alphabet [C]
Diameter Mark [D]: "○" or no mark

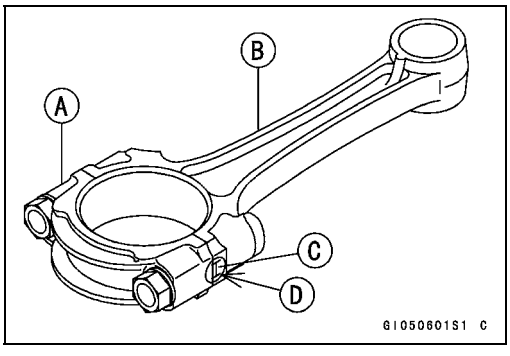

NOTICE

If the connecting rods, big end bearing inserts, or crankshaft are replaced with new ones, select the bearing insert and check clearance with a plastigage (press gauge) before assembling engine to be sure the correct bearing inserts are installed.

Crankshaft and Connecting Rods

- Apply molybdenum disulfide oil solution [A] to the inner surfaces of upper and lower bearing inserts.
- Do not apply any grease or oil to the cap inside and cap insert outside [B].
- Install the inserts so that their nails [C] are on the same side and fit them into the recess of the connecting rod and cap.

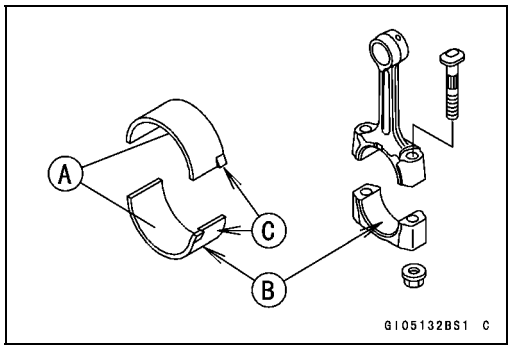

NOTICE

Wrong application of oil and grease could cause bearing damage.

○When installing the inserts [A], be careful not to damage the insert surface with the edge of the connecting rod [B] or the cap [C]. One way to install inserts is as follows.
  Installation [D] to Cap
  Installation [E] to Connecting Rod
  Push [F]
  Spare Dowel Pin [G]
  Connecting Rod Bolts [H]

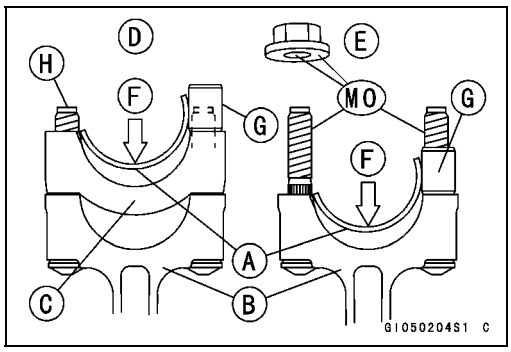

- Install the cap on the connecting rod, aligning the weight and diameter marks.
- Remove debris and clean the surface of inserts.
- Apply molybdenum disulfide oil solution [MO] to the threads and seating surfaces of the big end nuts and bolts.

- Install the crankshaft (see Crankshaft Installation).
- Install each connecting rod on its original crankpin.

○The connecting rod big end is bolted using the “plastic region fastening method”.

○This method precisely achieves the needed clamping force without exceeding it unnecessarily, allowing the use of thinner, lighter bolts further decreasing connecting rod weight.

○There are two types of the plastic region fastening. One is a bolt length measurement method and other is a rotation angle method. Observe one of the following two, but the bolt length measurement method is preferable because this is a more reliable way to tighten the big end nuts.

NOTICE

The connecting rod bolts are designed to stretch when tightened. Never reuse the connecting rod bolts. See the table below for correct bolt and nut usage.

NOTICE

Be careful not to overtighten the nuts.
The bolts must be positioned on the seating surface correctly to prevent the bolt heads from hitting the crankcase.

Crankshaft and Connecting Rods

(1) Bolt Length Measurement Method

- Be sure to clean the bolts, nuts, and connecting rods thoroughly with a high-flash point solvent, because the new connecting rods, bolts, and nuts are treated with an anti-rust solution.

⚠ WARNING

Gasoline and low-flash point solvents can be flammable and/or explosive and cause severe burns. Clean the bolts, nuts, and connecting rods in a well-ventilated area, and take care that there are no sparks or flame anywhere near the working area; this includes any appliance with a pilot light. Do not use gasoline or a low-flash point solvent to clean them.

NOTICE

Immediately dry the bolts and nuts with compressed air after cleaning.
Clean and dry the bolts and nuts completely.

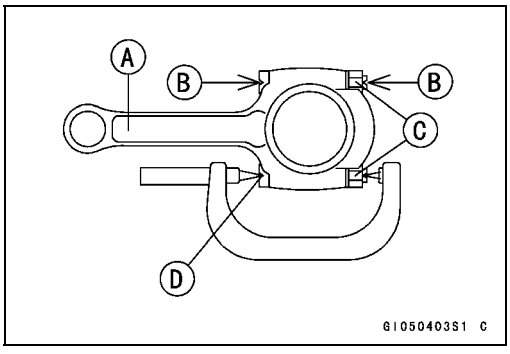

- Install new bolts in reused connecting rods.
- Dent both bolt head and bolt tip with a punch as shown in the figure.
- Before tightening, use a point micrometer to measure the length of new connecting rod bolts and record the values to find the bolt stretch.
  Connecting Rod [A]
  Mark here with a punch [B].
  Nuts [C]
  Fit micrometer pins into punch marks [D].
- Apply a small amount of molybdenum disulfide oil solution to the following.
  Threads of Nuts and Bolts
  Seating Surfaces of Nuts and Connecting Rods
- Tighten the big end nuts until the bolt elongation reaches the length specified in the table.
- Check the length of the connecting rod bolts.

★If the stretch is more than the usable range, the bolt has stretched too much. An overelongated bolt may break in use.

Bolt Length after tightening – Bolt Length before tightening = Bolt Stretch

Connecting Rod Assy	Bolt	Nut	Usable Range of Connecting Rod Bolt Stretch
New	Use the bolts attached to new con-rod.	Attached to new con-rod	0.24 ~ 0.36 mm (0.0094 ~ 0.0142 in.)
		New	
Used	Replace the bolts with new ones.	Used	0.20 ~ 0.32 mm (0.0079 ~ 0.0126 in.)
		New	

Crankshaft and Connecting Rods

(2) Rotation Angle Method

★If you don't have a point micrometer, you may tighten the nuts using the "Rotation Angle Method".

- Be sure to clean the bolts and nuts thoroughly with a high -flash point solvent, because the new bolts and nuts are treated with an anti-rust solution.

⚠ WARNING

Gasoline and low-flash point solvents can be flammable and/or explosive and cause severe burns. Clean the bolts and nuts in a well-ventilated area, and take care that there are no sparks or flame anywhere near the working area; this includes any appliance with a pilot light. Do not use gasoline or a low-flash point solvent to clean the bolts and nuts.

NOTICE

Immediately dry the bolts and nuts with compressed air after cleaning.
Clean and dry the bolts and nuts completely.

- Install new bolts in reused connecting rods.
- Apply a small amount of molybdenum disulfide oil solution to the following.
  Threads [A] of Nuts and Bolts
  Seating Surfaces [B] of Nuts and Connecting Rods

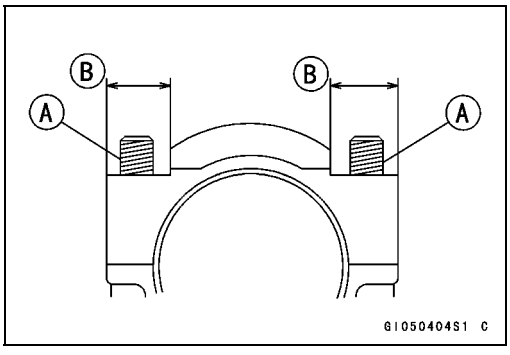

- First, tighten the nuts to the specified torque. See the table below.
- Next, tighten the nuts **120° ±5°** .

○Mark [A] the connecting rod big end caps and nuts so that nuts can be turned 120° [B] properly.

○Tighten the hexagon nut by 2 corners.

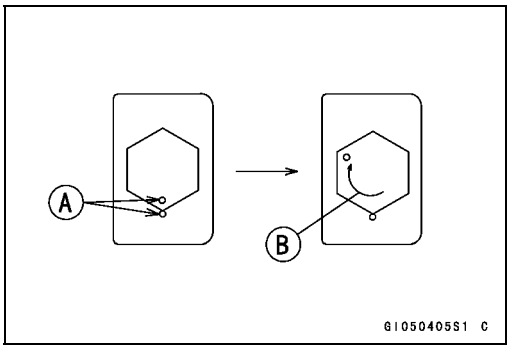

Connecting Rod Assy	Bolt	Nut	Torque + Angle N·m (kgf·m, ft·lb)
New	Use the bolts attached to new con-rod.	Attached to new con-rod	18 (1.8, 13) + 120°
		New	20 (2.0, 15) + 120°
Used	Replace the bolts with new ones.	Used	24 (2.4, 18) + 120°
		New	25 (2.5, 18) + 120°

Crankshaft and Connecting Rods

Crankshaft/Connecting Rod Cleaning

- After removing the connecting rods from the crankshaft, clean them with a high-flash point solvent.
- Blow the crankshaft oil passages with compressed air to remove any foreign particles or residue that may have accumulated in the passages.

Connecting Rod Bend Inspection

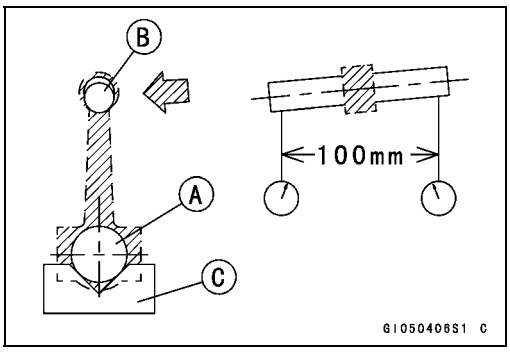

- Remove the connecting rod big end bearing inserts, and reinstall the connecting rod big end cap.
- Select an arbor [A] of the same diameter as the connecting rod big end, and insert the arbor through the connecting rod big end.
- Select an arbor of the same diameter as the piston pin and at least 100 mm (3.94 in.) long, and insert the arbor [B] through the connecting rod small end.
- On a surface plate, set the big-end arbor on V block [C].
- With the connecting rod held vertically, use a height gauge to measure the difference in the height of the arbor above the surface plate over a 100 mm (3.94 in.) length to determine the amount of connecting rod bend.

★If connecting rod bend exceeds the service limit, the connecting rod must be replaced.

Connecting Rod Bend
Service Limit: TIR 0.2/100 mm (0.008/3.94 in.)

Connecting Rod Twist Inspection

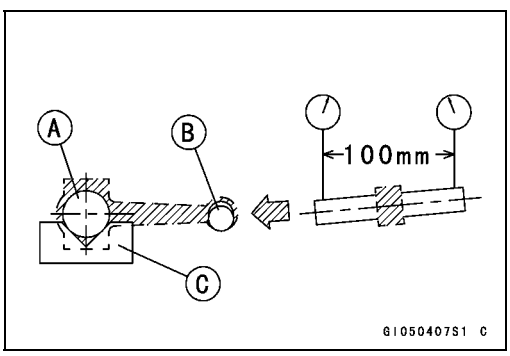

- With the big-end arbor [A] still on V block [C], hold the connecting rod horizontally and measure the amount that the arbor [B] varies from being paralleled with the surface plate over a 100 mm (3.94 in.) length of the arbor to determine the amount of connecting rod twist.

★If connecting rod twist exceeds the service limit, the connecting rod must be replaced.

Connecting Rod Twist
Service Limit: TIR 0.2/100 mm (0.008/3.94 in.)

Connecting Rod Big End Side Clearance Inspection

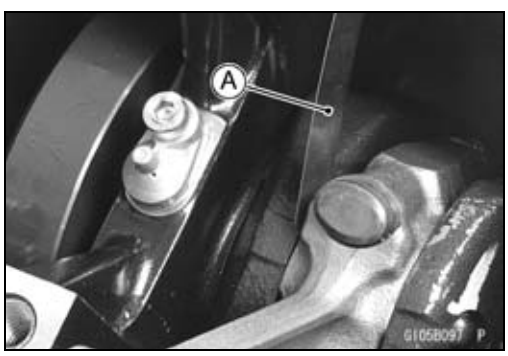

- Measure connecting rod big end side clearance.

○Insert a thickness gauge [A] between the big end and either crank web to determine clearance.

Connecting Rod Big End Side Clearance
Standard: 0.13 ~ 0.38 mm (0.0051 ~ 0.0150 in.)
Service Limit: 0.58 mm (0.023 in.)

★If the clearance exceeds the service limit, replace the connecting rod with new one and then check clearance again. If clearance is too large after connecting rod replacement, the crankshaft also must be replaced.

Crankshaft and Connecting Rods

Connecting Rod Big End Bearing Insert/Crankpin Wear Inspection

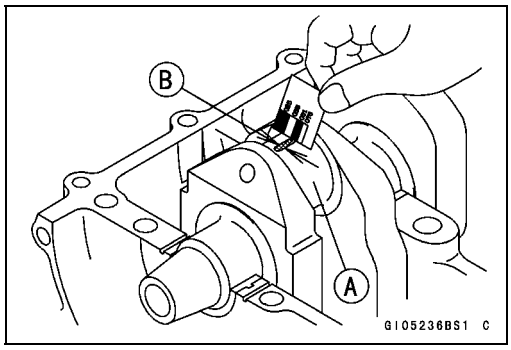

- Measure the bearing insert/crankpin [A] clearance with plastigage [B].
- Tighten the big end nuts to the specified torque (see Connecting Rod Installation).

NOTE

○*Do not move the connecting rod and crankshaft during clearance measurement.*

NOTICE

After measurement, replace the connecting rod bolts.

Connecting Rod Big End Bearing Insert/Crankpin Clearance

Standard: 0.041 ~ 0.071 mm (0.0016 ~ 0.0028 in.)

Service Limit: 0.11 mm (0.0043 in.)

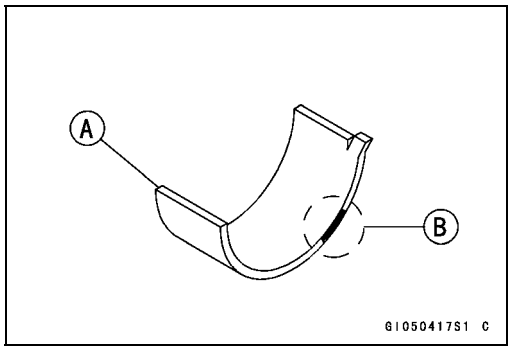

★If the clearance is within the standard, no bearing replacement is required.

★If the clearance is between 0.072 mm (0.0028 in.) and the service limit (0.11 mm, 0.0043 in.), replace the bearing inserts [A] with inserts painted blue [B]. Check insert/crankpin clearance with the plastigage. The clearance may exceed the standard slightly, but it must not be less than the minimum in order to avoid bearing seizure.

★If the clearance exceeds the service limit, measure the diameter of the crankpins.

Crankpin Diameter

Standard: 34.984 ~ 35.000 mm (1.3773 ~ 1.3780 in.)

Service Limit: 34.97 mm (1.3768 in.)

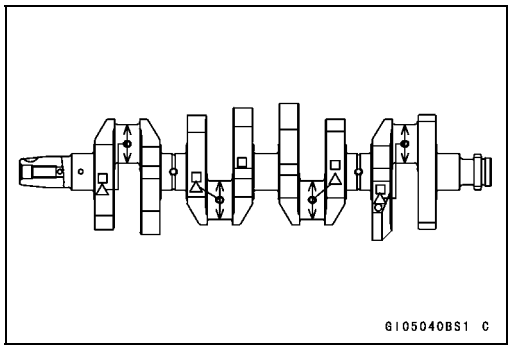

★If any crankpin has worn past the service limit, replace the crankshaft with a new one.

★If the measured crankpin diameters are not less than the service limit, but do not coincide with the original diameter markings on the crankshaft, make new marks on it.

Crankpin Diameter Marks

None 34.984 ~ 34.992 mm (1.3773 ~ 1.3776 in.)

○ 34.993 ~ 35.000 mm (1.3777 ~ 1.3780 in.)

△: Crankpin Diameter Marks, "○" or no mark.

Crankshaft and Connecting Rods

- Measure the connecting rod big end inside diameter, and mark each connecting rod big end in accordance with the inside diameter.
- Tighten the connecting rod big end nuts to the specified torque (see Connecting Rod Installation).

NOTE

○*The mark already on the big end should almost coincide with the measurement.*

Connecting Rod Big End Inside Diameter Marks

None	**38.000 ~ 38.008 mm (1.4961 ~ 1.4964 in.)**
○	**38.009 ~ 38.016 mm (1.4964 ~ 1.4967 in.)**

Big End Cap [A]
Connecting Rod [B]
Weight Mark, Alphabet [C]
Diameter Mark (Around Weight Mark) [D]: "○" or no mark

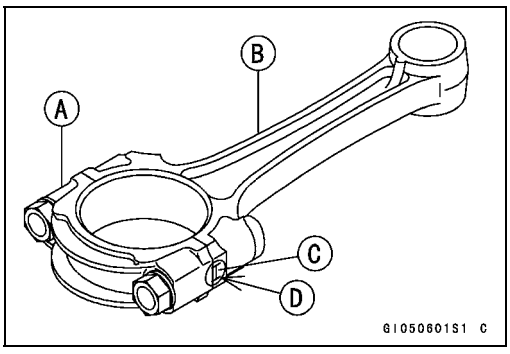

- Select the proper bearing insert [A] in accordance with the combination of the connecting rod and crankshaft coding.
  Size Color [B]

Con-rod Big End Inside Diameter Marking	Crankpin Diameter Marking	Bearing Insert	
		Size Color	Part Number
None	○	Brown	92139-1110
None	None	Black	92139-1109
○	○		
○	None	Blue	92139-1108

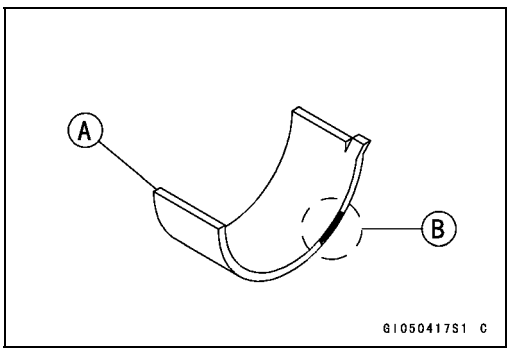

- Install the new inserts in the connecting rod and check insert/crankpin clearance with the plastigage.

Crankshaft Side Clearance Inspection

- Insert a thickness gauge [A] between the crankcase main bearing and the crank web at the No.2 journal [B] to determine clearance.

★If the clearance exceeds the service limit, replace the crankcase halves as a set.

NOTE

○*The upper and lower crankcase halves are machined at the factory in the assembled state, so the crankcase halves must be replaced as a set.*

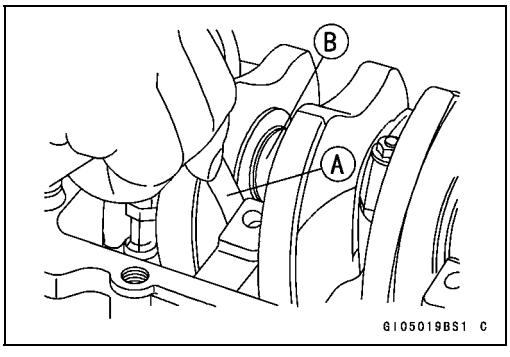

Crankshaft Side Clearance

Standard:	**0.05 ~ 0.20 mm (0.0020 ~ 0.0079 in.)**
Service Limit:	**0.40 mm (0.0157 in.)**

Crankshaft and Connecting Rods

Crankshaft Runout Inspection

● Measure the crankshaft runout.

★If the measurement exceeds the service limit, replace the crankshaft.

Crankshaft Runout

Standard:	**TIR 0.02 mm (0.0008 in.) or less**
Service Limit:	**TIR 0.05 mm (0.0020 in.)**

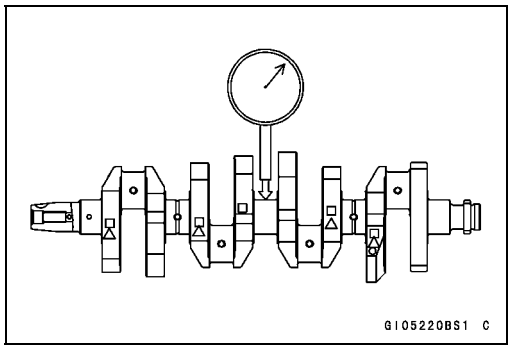

Crankshaft Main Bearing Insert/Journal Wear Inspection

● Using a plastigage (press gauge) [A], measure the bearing insert/journal [B] clearance.

NOTE

○*Tighten the crankcase bolts to the specified torque (see Crankcase Assembly).*

○*Do not turn the crankshaft during clearance measurement.*

○*Journal clearance less than 0.025 mm (0.00098 in.) can not be measured by plastigage, however, using genuine parts maintains the minimum standard clearance.*

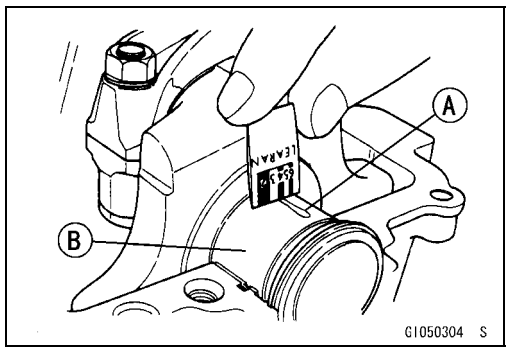

Crankshaft Main Bearing Insert/Journal Clearance

Standard:	**0.020 ~ 0.044 mm (0.0008 ~ 0.0017 in.)**
Service Limit:	**0.07 mm (0.0028 in.)**

★If the clearance is within the standard, no bearing replacement is required.

★If the clearance is between 0.045 mm (0.0018 in.) and the service limit (0.07 mm, 0.0028 in.), replace the bearing inserts [A] with inserts painted blue [B]. Check insert/journal clearance with the plastigage. The clearance may exceed the standard slightly, but it must not be less than the minimum in order to avoid bearing seizure.

★If the clearance exceeds the service limit, measure the diameter of the crankshaft main journal.

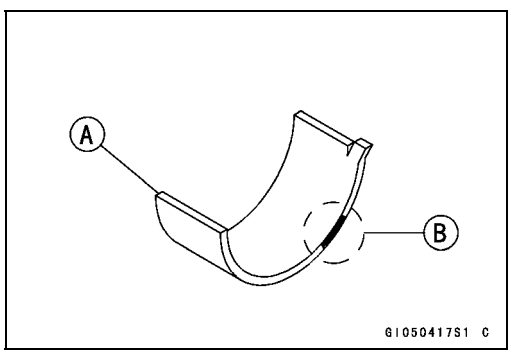

Crankshaft Main Journal Diameter

Standard:	**32.984 ~ 33.000 mm (1.2986 ~ 1.2992 in.)**
Service Limit:	**32.96 mm (1.2976 in.)**

★If any journal has worn past the service limit, replace the crankshaft with a new one.

★If the measured journal diameters are not less than the service limit, but do not coincide with the original diameter markings on the crankshaft, make new marks on it.

Crankshaft Main Journal Diameter Marks

None	**32.984 ~ 32.992 mm (1.2986 ~ 1.2989 in.)**
1	**32.993 ~ 33.000 mm (1.2989 ~ 1.2992 in.)**

□: Crankshaft Main Journal Diameter Marks, “1” or no mark.

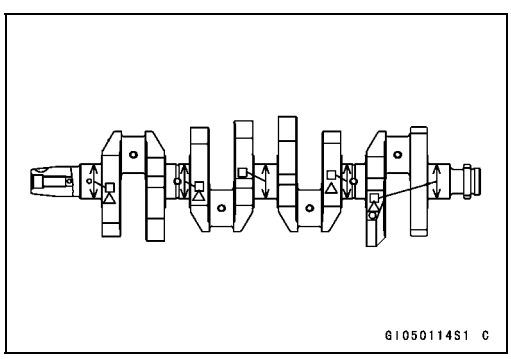

Crankshaft and Connecting Rods

- Measure the main bearing inside diameter, and mark the upper crankcase half in accordance with the inside diameter.
  Crankcase Main Bearing Inside Diameter Marks: "○" or no mark.
- Tighten the crankcase bolts to the specified torque (see Crankcase Assembly).

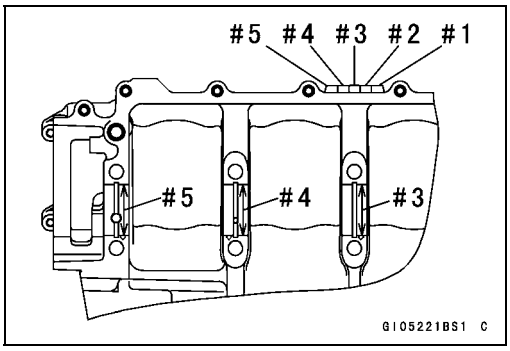

NOTE

○*The mark already on the upper crankcase half should almost coincide with the measurement.*

Crankcase Main Bearing Inside Diameter Marks

○	**36.000 ~ 36.008 mm (1.4173 ~ 1.4176 in.)**
None	**36.009 ~ 36.016 mm (1.4177 ~ 1.4179 in.)**

- Select the proper bearing insert [A] in accordance with the combination of the crankcase and crankshaft coding.
  Size Color [B]

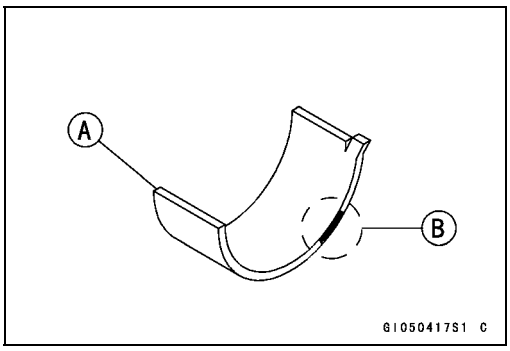

Crankcase Main Bearing Inside Diameter Marking	Crankshaft Main Journal Diameter Marking	Bearing Insert*		
		Size Color	Part Number	Journal Nos.
○	1	Brown	92028-1868	3, 5
			92028-1829	1, 2, 4
None	1	Black	92028-1867	3, 5
○	None		92028-1828	1, 2, 4
None	None	Blue	92028-1866	3, 5
			92028-1827	1, 2, 4

* The bearing inserts for Nos. 1, 2 and 4 journals have an oil groove, respectively.

- Install the new inserts in the crankcase halves and check insert/journal clearance with the plastigage.

Starter Motor Clutch

Starter Motor Clutch Removal/Installation

- Refer to the Alternator Rotor Removal/Installation in the Electrical System chapter.

Starter Motor Clutch Inspection

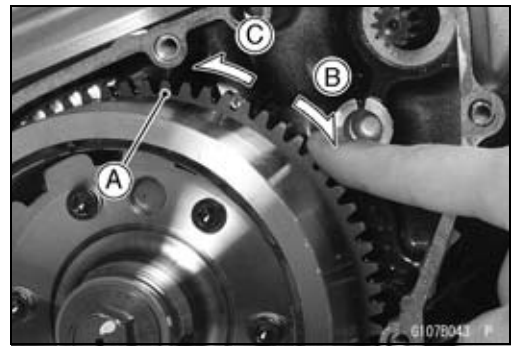

- Remove:
  Alternator Cover (see Alternator Cover Removal in the Electrical System chapter)
  Starter Idle Gear and Shaft
- Turn the starter motor clutch gear [A] by hand. The starter motor clutch gear should turn clockwise [B] freely, but should not turn counterclockwise [C].

★If the starter motor clutch does not operate as it should or if it makes noise, go to the next step.

- Disassemble the starter motor clutch, and visually inspect the clutch parts.

★If there is any worn or damaged part, replace it.

NOTE

○*Examine the starter motor clutch gear as well. Replace it if it worn or damaged.*

Starter Motor Clutch Disassembly

- Remove:
  Alternator Rotor (see Alternator Rotor Removal in the Electrical System chapter)
  Starter Motor Clutch Bolts [A]

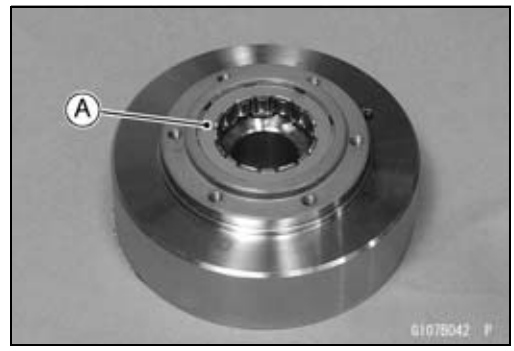

- Remove the starter motor clutch [A].

Starter Motor Clutch Assembly

- Apply a non-permanent locking agent to the threads of the starter motor clutch bolts and tighten them.

Torque - Starter Motor Clutch Bolts: 12 N·m (1.2 kgf·m, 106 in·lb)

Transmission

Shift Pedal Removal

- Align the mark [A] on the shift shaft with the slit [B] on the shift lever.
- Remove:
  Shift Lever Bolt [C]
  Shift Lever

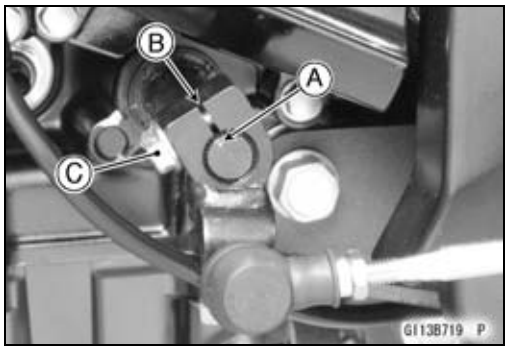

- Remove:
  Front Footpeg Bracket Bolts [A]
  Front Footpeg Bracket [B]

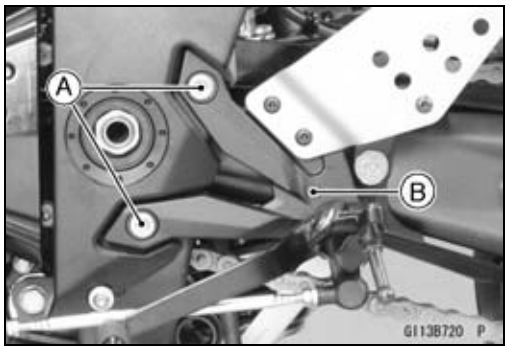

- Remove:
  Bolt [A]
  Front Footpeg [B]
  Shift Pedal [C]

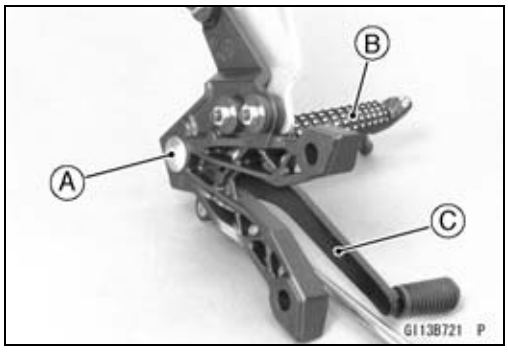

Shift Pedal Installation

- Apply grease to the oil seal lip.
- Press the oil seals [A] in the shift pedal housing [B] so that the oil seal surfaces are flush with the housing end [C] as shown in the figure.

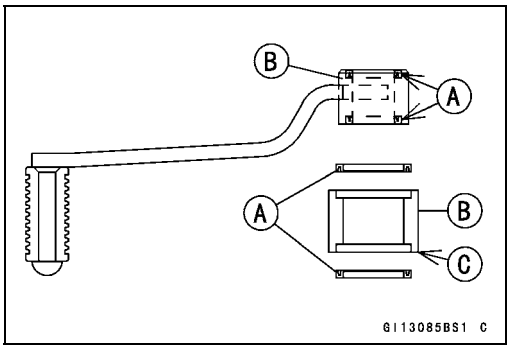

- Apply grease to the sliding surfaces [A] on the footpeg holder [B].
- Apply a non-permanent locking agent to the shift pedal mounting bolt [C].
- Tighten:

  Torque - Shift Pedal Mounting Bolt: 34 N·m (3.5 kgf·m, 25 ft·lb)

  Front Footpeg Bracket [D]
  Shift Pedal [E]

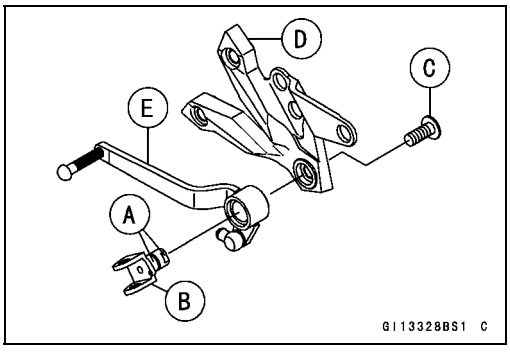

Transmission

- Install the front footpeg bracket [A].
- Tighten:

Torque - Front Footpeg Bracket Bolts [B]: 25 N·m (2.5 kgf·m, 18 ft·lb)

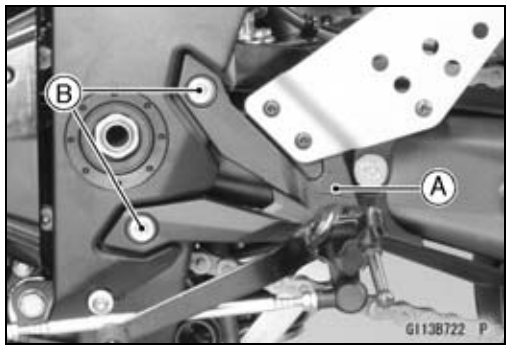

- Install the shift lever [A], aligning the mark (previously marked).
- Tighten:

Torque - Shift Lever Bolt: 6.9 N·m (0.70 kgf·m, 61 in·lb)

- Install the shift pedal [B] as shown in the figure.
  About 90° [C]

○To adjust the pedal position, loosen the front locknut [D] (left-hand threads) and rear locknut [E] and then turn the tie-rod [F].

- Tighten:

Torque - Tie-Rod Locknuts: 6.9 N·m (0.70 kgf·m, 61 in·lb)

- Be sure the sealing lip of the rubber boot fits into the groove of the ball joint.

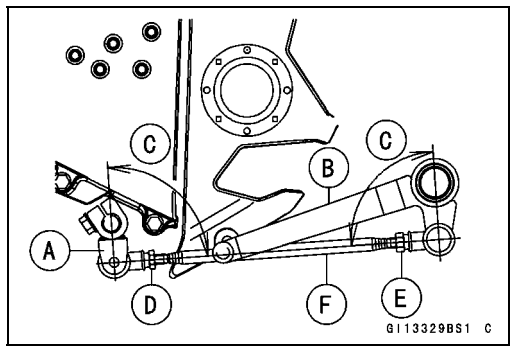

External Shift Mechanism Removal

- Remove:
  Engine Oil (Drain, see Engine Oil Change in the Periodic Maintenance chapter)
  Shift Lever (see Shift Pedal Removal)
  Clutch (see Clutch Removal in the Clutch chapter)
  Oil Pipe Holder Bolts [A]
  Oil Pipe Holders [B]
  Oil Pipe [C] and O-rings

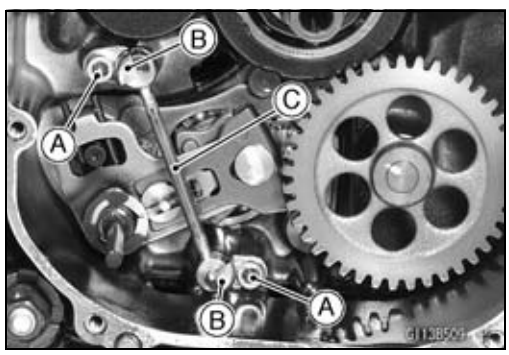

- Remove the shift shaft assembly [A] while pulling out the shift mechanism arm [B].

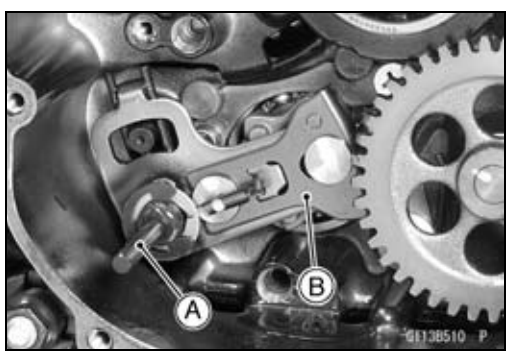

Transmission

- Remove:
  Oil Pump Drive Gear (see Oil Pump Drive Gear Removal in the Engine Lubrication System chapter)
  Gear Positioning Lever Bolt [A]
  Gear Positioning Lever [B]
  Collar and Spring

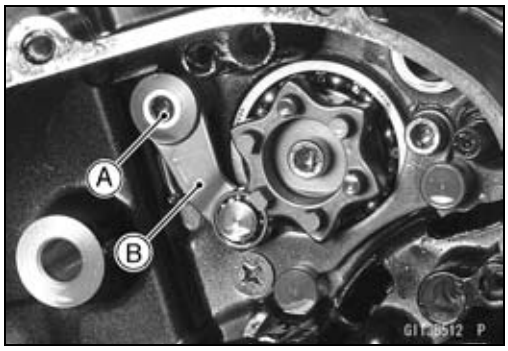

External Shift Mechanism Installation

- Install the gear positioning lever [A] as shown in the figure.
  Spring [B]
  Collar [C]
  Bolt [D]
- Tighten:

  Torque - Gear Positioning Lever Bolt: 12 N·m (1.2 kgf·m, 106 in·lb)
- Apply grease to the O-rings on the oil pipe ends.
- Apply a non-permanent locking agent to the threads of the oil pipe holder bolts and tighten them.

  Torque - Oil Pipe Holder Bolts: 13 N·m (1.3 kgf·m, 115 in·lb)
- Install the removed parts (see appropriate chapters).

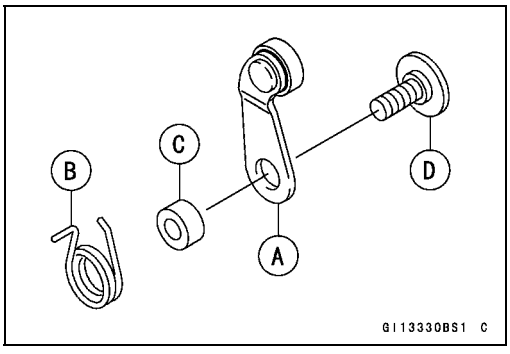

External Shift Mechanism Inspection

- Examine the shift shaft [A] for any damage.

★If the shaft is bent, straighten or replace it.
★If the serration [B] are damaged, replace the shaft.
★If the springs [C] are damaged in any way, replace them.
★If the shift mechanism arm [D] is damaged in any way, replace the shaft.

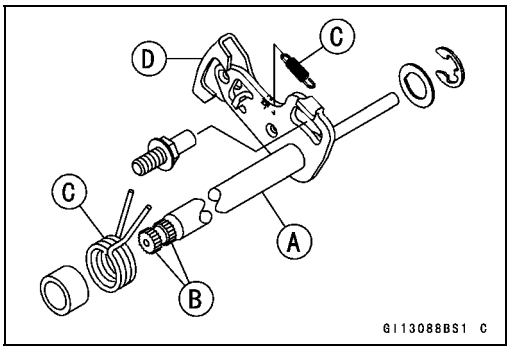

- Check the return spring pin [A] is not loose.

★If it is loose, unscrew it, apply a non-permanent locking agent to the threads, and tighten it.

Torque - Shift Shaft Return Spring Pin: 29 N·m (3.0 kgf·m, 21 ft·lb)

- Check the gear positioning lever [B] and its spring for breaks or distortion.

★If the lever or spring are damaged in any way, replace them.

- Visually inspect the shift drum cam [C].

★If they are badly worn or if they show any damage, replace it.

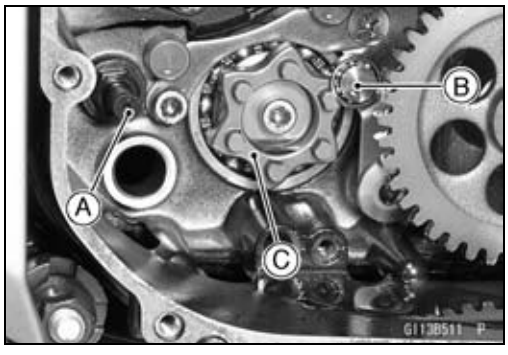

Transmission

Transmission Shaft Removal

- Split the crankcase (see Crankcase Splitting).
- Remove the drive shaft [A] and output shaft [B].

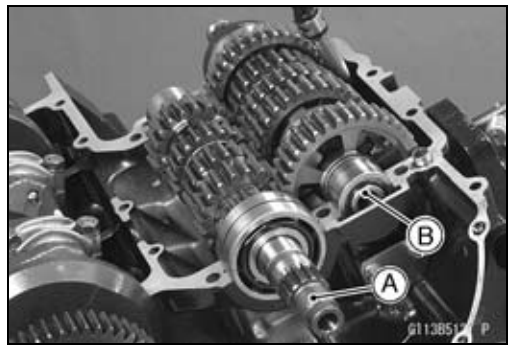

Transmission Shaft Installation

- Check to see that the set pins [A] and set rings [B] are in place.

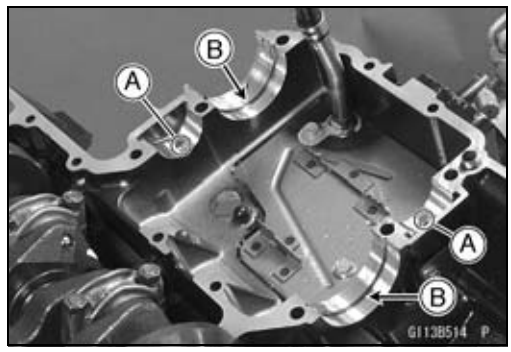

- Install the drive shaft and output shaft into the upper crankcase half.
- Apply engine oil to the bearings.

○The bearing set pins and rings must match properly with the holes or grooves in the bearing outer races. When they are properly matched, there is no clearance [A] between the crankcase and the bearing outer races.

- Assemble the crankcase (see Crankcase Assembly).
- Press in the oil seal [A] onto collar [B] so that the surface of the oil seal is flush with the counterbore bottom surface [C] of the crankcase.

○Apply high-temperature grease to the oil seal lips.

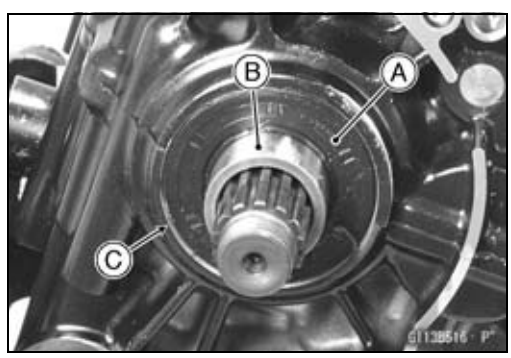

Transmission Shaft Disassembly

- Remove the transmission shafts (see Transmission Shaft Removal).
- Remove the circlips, disassemble the transmission shafts.

Special Tool - Outside Circlip Pliers: 57001-144

- The 5th gear [A] on the output shaft has three steel balls assembled into it for the positive neutral finder mechanism. Remove the 5th gear.

○Set the output shaft in a vertical position holding the 3rd gear [B].

○Spin the 5th gear quickly [C] and pull it off upward.

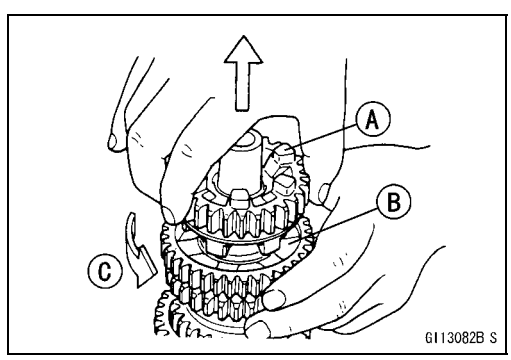

Transmission

- Remove the ball bearing [A] from each shafts.

  Special Tools - Bearing Puller [B]: 57001-135
  Bearing Puller Adapter [C]: 57001-317

- Discard the bearing.

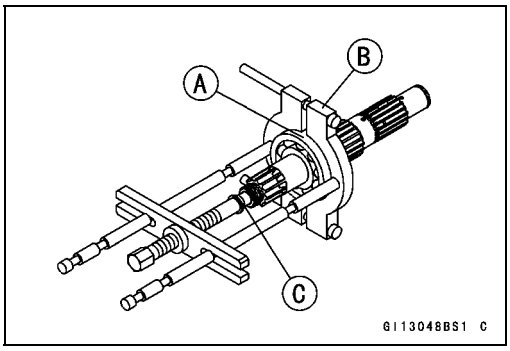

Transmission Shaft Assembly

- Apply engine oil to the bushings, ball bearings and shafts.
- Install the gear bushings [A] on the shaft with their holes [B] aligned.

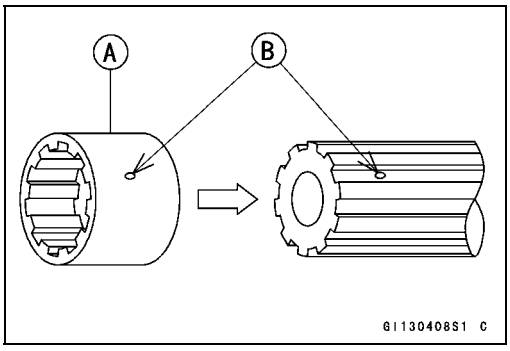

- Replace any circlips removed with new ones.
- Install the circlips [A] so that the opening [B] is aligned with a spline groove [C].

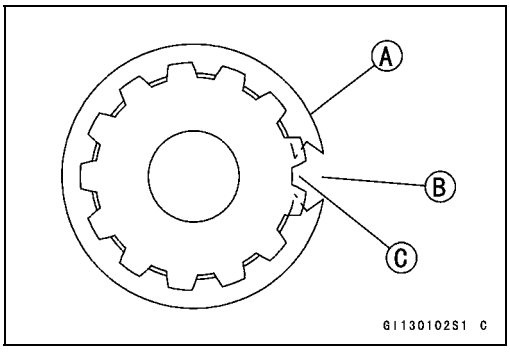

- The drive shaft gears can be recognized by size: the gear with the smallest diameter is 1st gear, and the largest one is 6th gear. Be sure that all parts are put back in the correct sequence and all circlips and washers are properly in place.
- Install the 3rd/4th gear onto the drive shaft with their oil holes aligned.
- Install the 6th gear bushing onto the drive shaft with their oil holes aligned.
- The output shaft gears can be recognized by size: the gear with the largest diameter is 1st gear, and the smallest one is 6th gear. Be sure that all parts are put back in the correct sequence and all circlips and washers are properly in place.
- Install the 6th gear onto the output shaft with their oil holes aligned.
- Install the 3rd/4th gear bushings onto the output shaft with their oil holes aligned.

Transmission

NOTE

○*When the toothed washers [28] [29] are assembled onto the output shaft, note the following.*

○*When the tangs [A] of the toothed washer [29] shall be assembled, they should be installed into the notch [B] of the toothed washer [28] (see Page 9-30).*

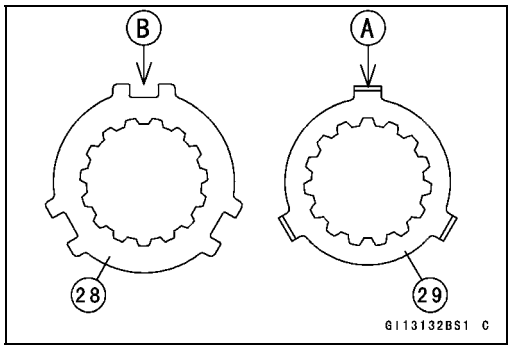

- Fit the steel balls into the 5th gear holes in the output shaft.
  5th Gear [A]
  Output Shaft [B]
  Steel Balls [C]

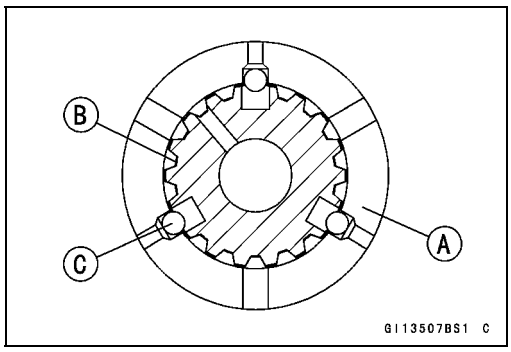

NOTICE

Do not apply grease to the balls to hold them in place. This will cause the positive neutral finder mechanism to malfunction.

○After assembling the 5th gear with steel balls in place on the output shaft, check the ball-locking effect that the 5th gear doesn't come out of the output shaft when moving it up and down by hand.

- Check that each gear spins or slides freely on the transmission shafts without binding after assembly.

Transmission

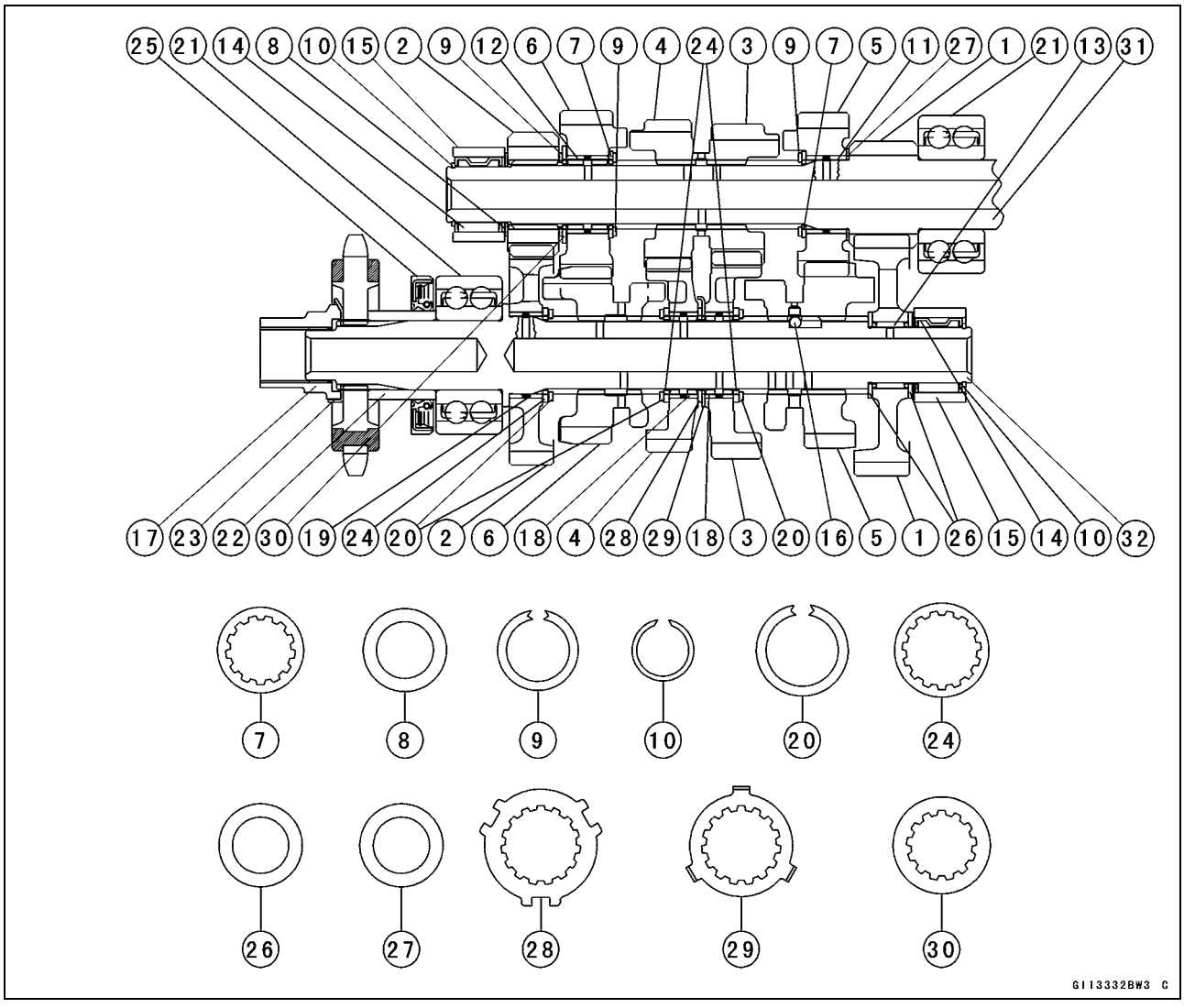

1. 1st Gear
2. 2nd Gear
3. 3rd Gear
4. 4th Gear
5. 5th Gear
6. 6th (Top) Gear
7. Toothed Washer, ϕ31 mm (1.22 in.)
8. Thrust Washer, ϕ30 mm (1.18 in.)
9. Circlip, ϕ29 mm (1.14 in.)
10. Circlip
11. Bushing
12. Bushing
13. Needle Bearing
14. Needle Bearing
15. Bearing Outer Race
16. Steel Ball
17. Nut
18. Bushing
19. Bushing
20. Circlip, ϕ33 mm (1.30 in.)
21. Ball Bearing
22. Collar
23. Washer
24. Toothed Washer, ϕ34 mm (1.34 in.)
25. Oil Seal
26. Thrust Washer, ϕ31 mm (1.22 in.)
27. Thrust Washer, ϕ33 mm (1.30 in.)
28. Toothed Washer
29. Toothed Washer
30. Toothed Washer, ϕ35 mm (1.38 in.)
31. Drive Shaft
32. Output Shaft

Transmission

Shift Drum and Fork Removal

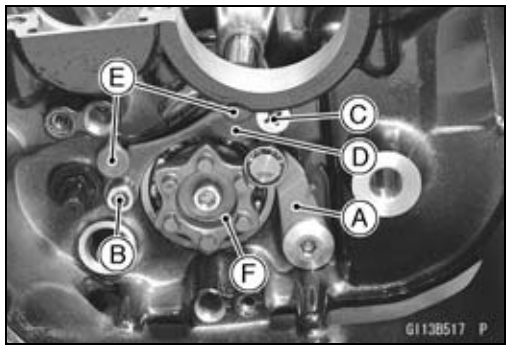

- Remove:
  Lower Crankcase Half (see Crankcase Splitting)
  Transmission Shafts
  Gear Positioning Lever [A] (see External Shift Mechanism Removal)
  Bolt [B] and Screw [C]
  Shift Drum Bearing Holder [D]
- Pull out the shift rods [E], and take off the shift forks.
- Pull out the shift drum [F].

Shift Drum and Fork Installation

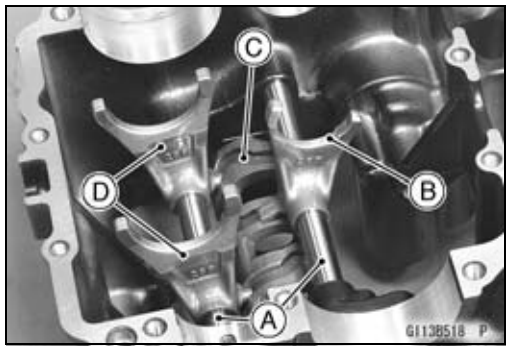

- Apply engine oil to the shift drum, forks and rods.
- Install the shift rods [A], noting the groove position.

○The rods are identical.

○Position the one with shortest ears [B] on the drive shaft and place the pin in the center groove in the shift drum [C].

○The two forks [D] on the output shaft are identical.

- Install the forks so that its “266” and “267” side faces clutch side.
- Apply a non-permanent locking agent to the threads of the shift drum bearing holder bolt and screw, and tighten them.

Torque - Shift Drum Bearing Holder Bolt: 13 N·m (1.3 kgf·m, 115 in·lb)
Shift Drum Bearing Holder Screw: 5.9 N·m (0.60 kgf·m, 52 in·lb)

Shift Drum Disassembly

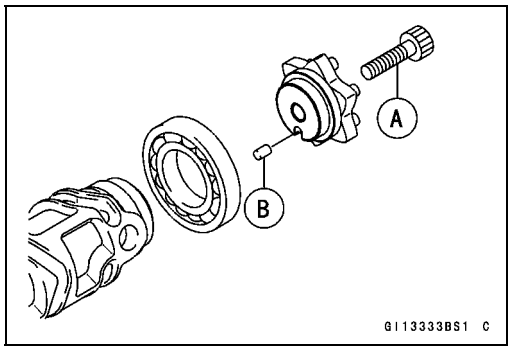

- Remove the shift drum (see Shift Drum and Fork Removal).
- While holding the shift drum with a vise, remove the shift drum cam holder bolt.
  Shift Drum Cam Holder Bolt [A]
  Dowel Pin [B]

Shift Drum Assembly

- Be sure to install the dowel pin.
- Apply a non-permanent locking agent to the threads of the shift drum cam holder bolt, and tighten it.

Torque - Shift Drum Cam Holder Bolt: 12 N·m (1.2 kgf·m, 106 in·lb)

Transmission

Shift Fork Bending Inspection

- Visually inspect the shift forks, and replace any fork that is bent. A bent fork could cause difficulty in shifting, or allow the transmission to jump out of gear when under power.
  90° [A]

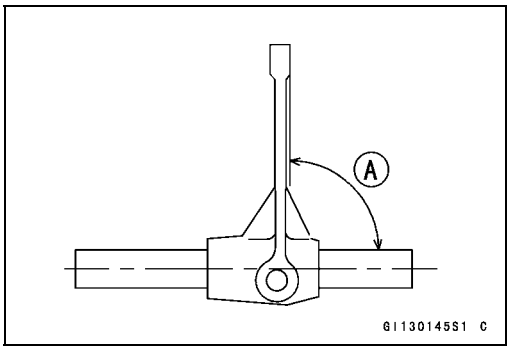

Shift Fork/Gear Groove Wear Inspection

- Measure the thickness of the shift fork ears [A], and measure the width [B] of the gear grooves.

★If the thickness of a shift fork ear is less than the service limit, the shift fork must be replaced.

Shift Fork Ear Thickness

Standard:	**5.9 ~ 6.0 mm (0.232 ~ 0.236 in.)**
Service Limit:	**5.8 mm (0.228 in.)**

★If the gear groove is worn over the service limit, the gear must be replaced.

Gear Groove Width

Standard:	**6.05 ~ 6.15 mm (0.238 ~ 0.242 in.)**
Service Limit:	**6.25 mm (0.246 in.)**

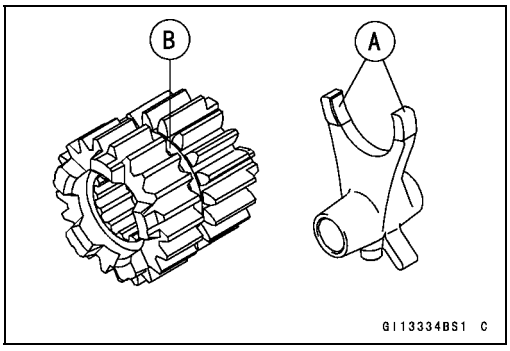

Shift Fork Guide Pin/Drum Groove Wear Inspection

- Measure the diameter of each shift fork guide pin [A], and measure the width [B] of each shift drum groove.

★If the guide pin on any shift fork is less than the service limit, the fork must be replaced.

Shift Fork Guide Pin Diameter

Standard:	**6.9 ~ 7.0 mm (0.272 ~ 0.276 in.)**
Service Limit:	**6.8 mm (0.268 in.)**

★If any shift drum groove is worn over the service limit, the drum must be replaced.

Shift Drum Groove Width

Standard:	**7.05 ~ 7.20 mm (0.278 ~ 0.283 in.)**
Service Limit:	**7.3 mm (0.287 in.)**

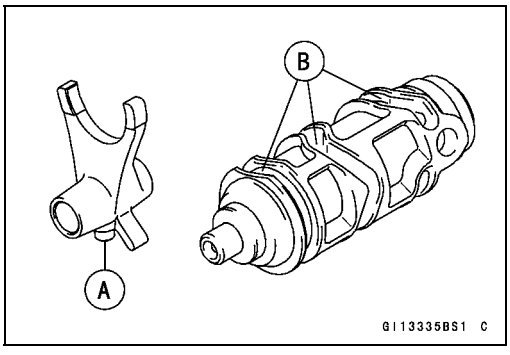

Gear Dog and Gear Dog Hole Damage Inspection

- Visually inspect the gear dogs [A] and gear dog holes [B].

★Replace any damaged gears or gears with excessively worn dogs or dog holes.

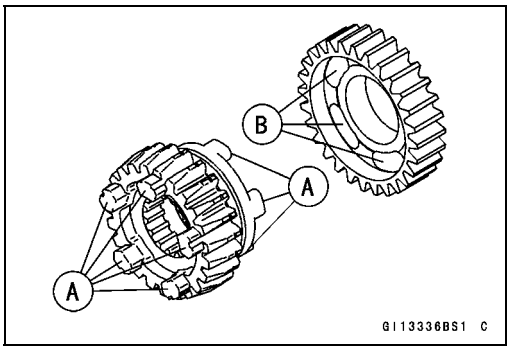

Wheels/Tires

Table of Contents

Exploded View 10-2
Specifications 10-4
Special Tools 10-5
Wheels (Rims) 10-6
- Front Wheel Removal 10-6
- Front Wheel Installation 10-6
- Rear Wheel Removal 10-7
- Rear Wheel Installation 10-8
- Wheel Inspection 10-9
- Axle Inspection 10-10
- Balance Inspection 10-10
- Balance Adjustment 10-10
- Balance Weight Removal 10-10
- Balance Weight Installation 10-11

Tires 10-12
- Air Pressure Inspection/Adjustment 10-12
- Tire Inspection 10-12
- Tire Removal 10-12
- Tire Installation 10-12
- Tire Repair 10-14

Hub Bearing 10-15
- Hub Bearing Removal 10-15
- Hub Bearing Installation 10-15
- Hub Bearing Inspection 10-16
- Hub Bearing Lubrication 10-16

Exploded View

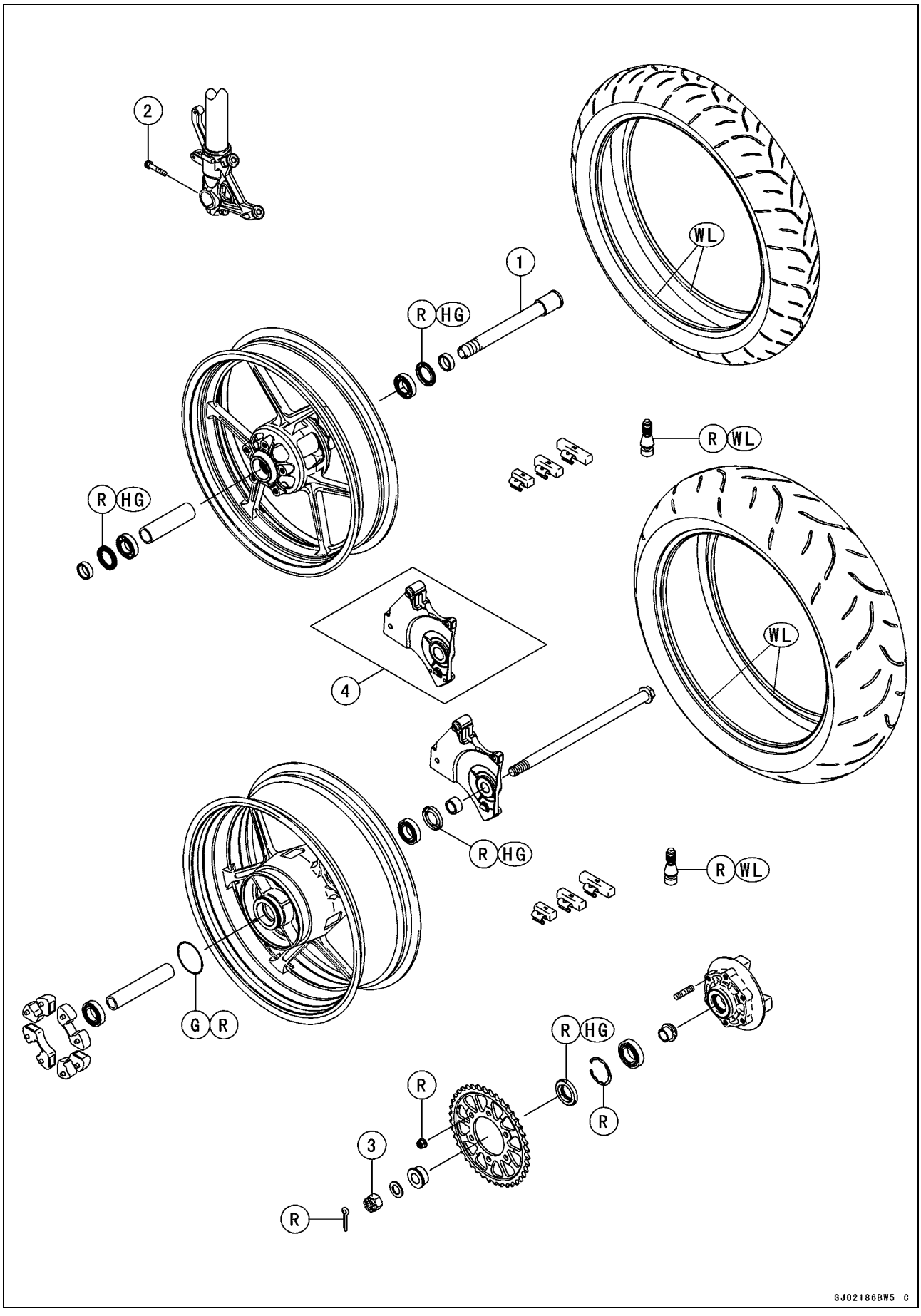

Exploded View

No.	Fastener	Torque			Remarks
		N·m	kgf·m	ft·lb	
1	Front Axle	127	13.0	93.7	
2	Front Axle Clamp Bolt	20	2.0	15	
3	Rear Axle Nut	108	11.0	79.7	

4. ABS Equipped Models
G: Apply grease.
HG: Apply high-temperature grease.
R: Replacement Parts
WL: Apply soap and water solution or rubber lubricant.

Specifications

Item	Standard	Service Limit
Wheels (Rims)		
Rim Runout:		
Axial	TIR 0.5 mm (0.02 in.) or less	TIR 1.0 mm (0.04 in.)
Radial	TIR 0.8 mm (0.03 in.) or less	TIR 1.0 mm (0.04 in.)
Axle Runout/100 mm (3.94 in.)	TIR 0.03 mm (0.0012 in.) or less	TIR 0.2 mm (0.008 in.)
Wheel Balance	10 g (0.35 oz.) or less	– – –
Balance Weights	10 g (0.35 oz.), 20 g (0.71 oz.), 30 g (1.06 oz.)	– – –
Rim Size:		
Front	J17M/C × MT3.50	– – –
Rear	J17M/C × MT5.50	– – –
Tires		
Air Pressure (when Cold):		
Front	Up to 180 kg (397 lb) load: 250 kPa (2.50 kgf/cm², 36 psi)	– – –
Rear	Up to 180 kg (397 lb) load: 290 kPa (2.90 kgf/cm², 42 psi)	– – –
Tread Depth:		
Front	4.0 mm (0.16 in.)	1 mm (0.04 in.) (AT, CH, DE) 1.6 mm (0.06 in.)
Rear	5.0 mm (0.20 in.)	Up to 130 km/h (80 mph): 2 mm (0.08 in.) Over 130 km/h (80 mph): 3 mm (0.12 in.)
Standard Tires:	Make, Type	Size
Front	DUNLOP, SPORTMAX D210F G	120/70 ZR17 M/C (58 W)
Rear	DUNLOP, SPORTMAX D210	180/55 ZR17 M/C (73 W)

⚠ WARNING

Some replacement tires may adversely affect handling and cause an accident resulting in serious injury or death. To ensure proper handling and stability, use only the recommended standard tires for replacement, inflated to the standard pressure.

Special Tools

Bearing Driver Set:
57001-1129

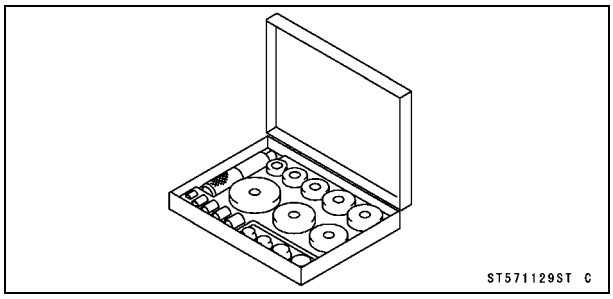

Jack:
57001-1238

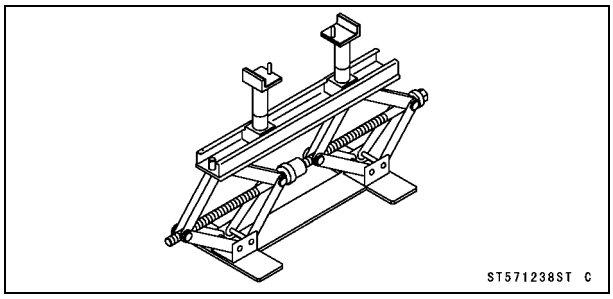

Bearing Remover Head, ϕ20 × ϕ22:
57001-1293

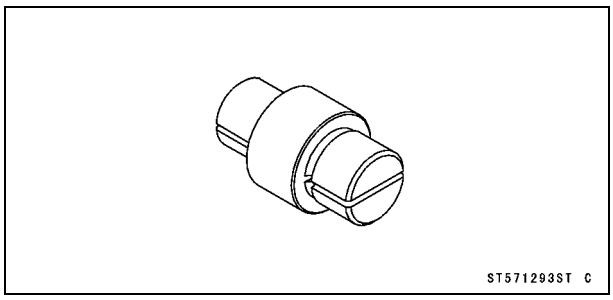

Bearing Remover Shaft, ϕ13:
57001-1377

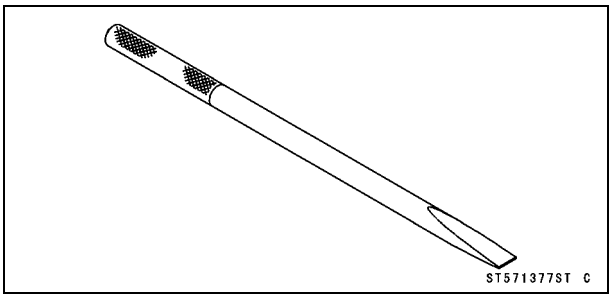

Jack Attachment:
57001-1608

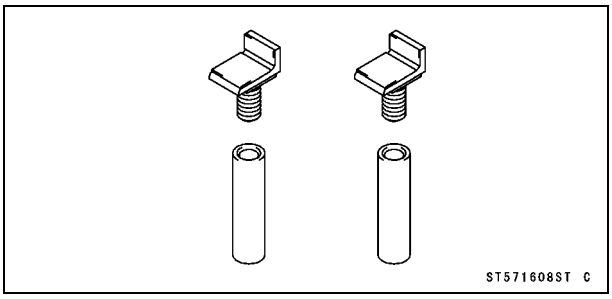

Wheels (Rims)

Front Wheel Removal

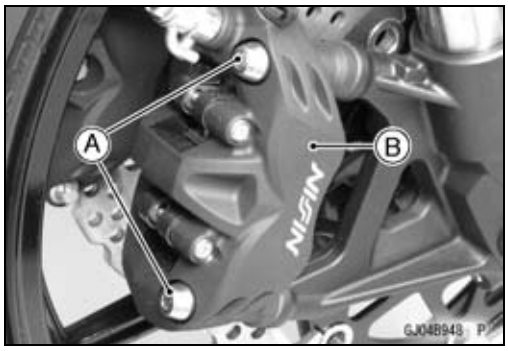

- Remove:
  Front Caliper Mounting Bolts [A] (Both Sides)
  Front Calipers [B] (Both Sides)

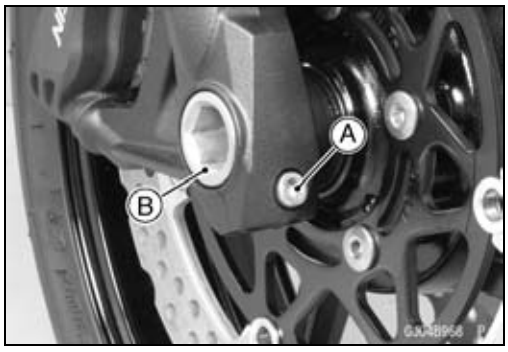

- Remove:
  Front Fender (see Front Fender Removal in the Frame chapter)
  Front Axle Clamp Bolt [A] (Loosen)
  Front Axle [B]

- Raise the front wheel off the ground.

  Special Tools - Jack: 57001-1238
  Jack Attachment: 57001-1608

- Pull out the axle to the right and drop the front wheel out of the forks.

NOTICE

Do not lay the wheel down on one of the discs. This can damage or warp the disc. Place blocks under the wheel so that the disc does not touch the ground.

Front Wheel Installation

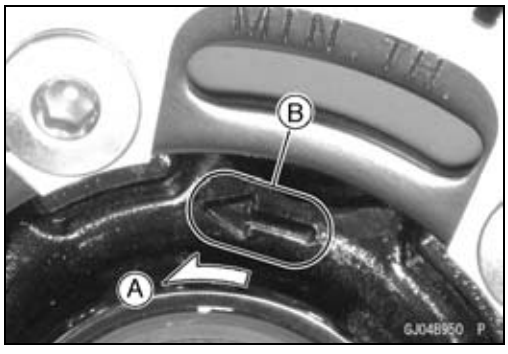

NOTE

○*The direction of the wheel rotation [A] is shown by an arrow [B] on the wheel hub.*

- Check the wheel rotation mark on the front wheel and install it.

Wheels (Rims)

- Apply high-temperature grease to the grease seal lips.
- Fit the collars [A] on the both sides of the hub.

○The collars are identical.

- Insert the front axle.
- Tighten:

Torque - Front Axle: 127 N·m (13.0 kgf·m, 93.7 ft·lb)

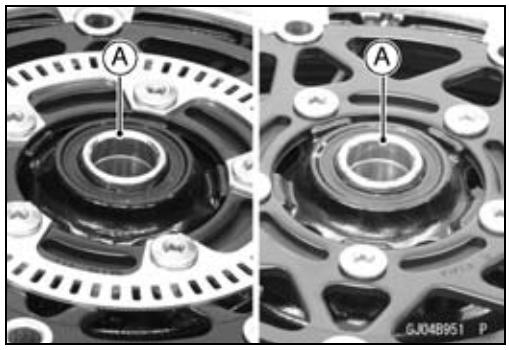

- Before tightening the axle clamp bolt [A] on the right front fork leg, pump the front fork up and down 4 or 5 times to allow the right front fork leg to seat on the front axle.

NOTE

○*Put a block in front of the front wheel to stop moving.*

- Tighten:

Torque - Front Axle Clamp Bolt: 20 N·m (2.0 kgf·m, 15 ft·lb)

- Install the removed parts (see appropriate chapters).
- Check the front brake effectiveness (see Brake Operation Inspection in the Periodic Maintenance chapter).

⚠ WARNING

After servicing, it takes several applications of the brake lever before the brake pads contact the disc, which could result in increased stopping distance and cause an accident resulting in injury or death. Do not attempt to ride the motorcycle until a firm brake lever is obtained by pumping the lever until the pads are against the disc.

Rear Wheel Removal

- Raise the rear wheel off the ground with the stand [A].

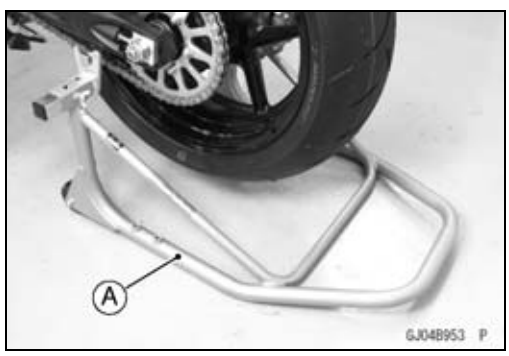

- Remove:
  - Cotter Pin [A]
  - Axle Nut [B]
  - Washer [C]
  - Axle [D] (from Right Side)
- For ABS equipped models, remove the rear wheel rotation sensor from the caliper bracket (see Rear Wheel Rotation Sensor Removal in the Brakes chapter).

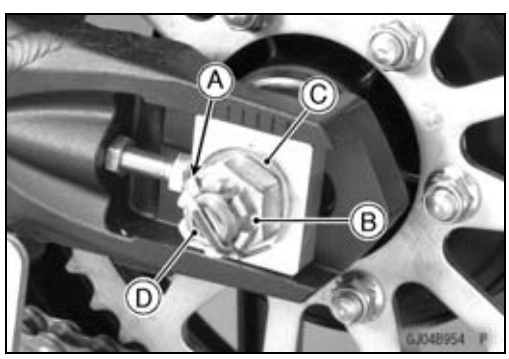

Wheels (Rims)

- Remove the drive chain [A] from the rear sprocket toward the left.
- Move the rear wheel back and remove it.

NOTICE

Do not lay the wheel on the ground with the disc facing down. This can damage or warp the disc. Place blocks under the wheel so that the disc does not touch the ground.

Rear Wheel Installation

- Apply high-temperature grease to the grease seal lips.
- Fit the collars on the both sides of the hub.
  Left Side Collar [A] (with Flange)
  Right Side Collar [B]

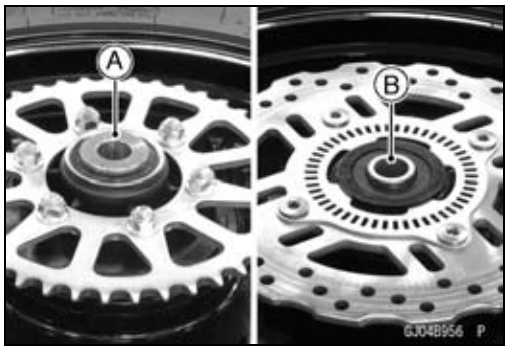

- Engage the drive chain with the rear sprocket.
- Install the caliper bracket [A] onto the swingarm stop [B].
- Insert the axle from the right side of the wheel, and tighten the axle nut.

Torque - Rear Axle Nut: 108 N·m (11.0 kgf·m, 79.7 ft·lb)

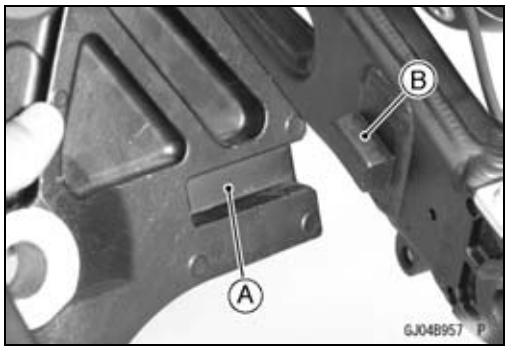

- Insert a new cotter pin [A].

NOTE

- *When inserting the cotter pin, if the slots in the nut do not align with the cotter pin hole in the axle, tighten the nut clockwise [B] up to next alignment.*
- *It should be within 30°.*
- *Loosen once and tighten again when the slot goes past the nearest hole.*

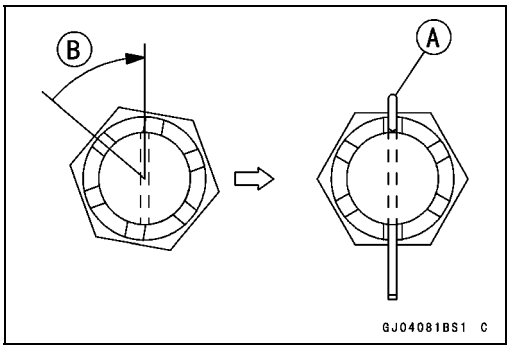

- Bend the cotter pin [A] over the nut.

⚠ WARNING

A loose axle nut can lead to an accident resulting in serious injury or death. Tighten the axle nut to the proper torque and install a new cotter pin.

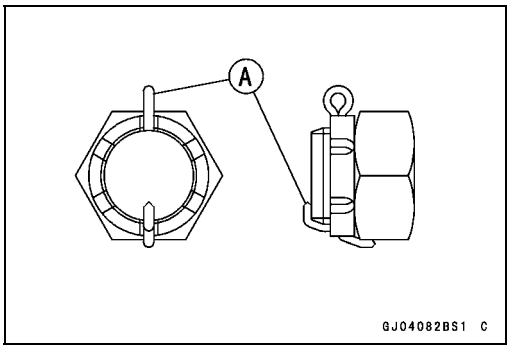

Wheels (Rims)

- Adjust the drive chain slack after installation (see Drive Chain Slack Inspection in the Periodic Maintenance chapter).
- For ABS equipped models, install the rear wheel rotation sensor (see Rear Wheel Rotation Sensor Installation in the Brakes chapter).
- Check the rear brake effectiveness.

⚠ WARNING

After servicing, it takes several applications of the brake lever or pedal before the brake pads contact the disc, which could result in increased stopping distance and cause an accident resulting in injury or death. Do not attempt to ride the motorcycle until a firm brake lever or pedal is obtained by pumping the lever or pedal until the pads are against the disc.

Wheel Inspection

- Raise the front/rear wheel off the ground.

Special Tools - Jack: 57001-1238
Jack Attachment: 57001-1608

- Spin the wheel lightly, and check for roughness or binding.
- ★ If roughness or binding is found, replace the hub bearings (see Hub Bearing Removal/Installation).
- Inspect the wheel for small cracks, dents, bending, or warp.
- ★ If there is any damage to the wheel, replace the wheel.
- Remove the wheel, and support it with the tire by the axle.
- Measure the rim runout, axial [A] and radial [B], with a dial gauge.
- ★ If rim runout exceeds the service limit, check the hub bearings (see Hub Bearing Inspection).
- ★ If the problem is not due to the bearings, replace the wheel.

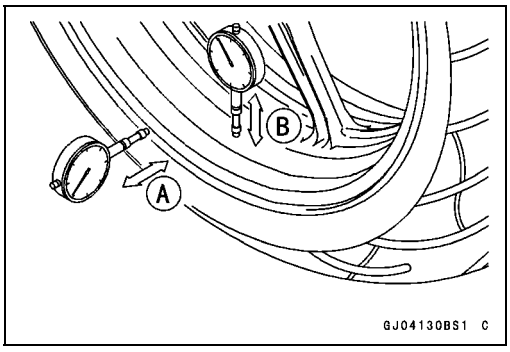

Rim Runout (with tire installed)

Standard:

Axial	**TIR 0.5 mm (0.02 in.) or less**
Radial	**TIR 0.8 mm (0.03 in.) or less**

Service Limit:

Axial	**TIR 1.0 mm (0.04 in.)**
Radial	**TIR 1.0 mm (0.04 in.)**

⚠ WARNING

Damaged wheel parts may fail and cause an accident resulting in serious injury or death. Never attempt to repair a damaged wheel part. If the wheel part is damaged, it must be replaced with a new one.

Wheels (Rims)

Axle Inspection

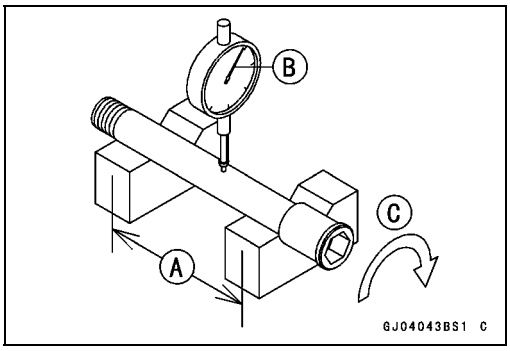

- Remove the front and rear axles (see Front/Rear Wheel Removal).
- Visually inspect the front and rear axle for damages.

★If the axle is damaged or bent, replace it.

- Place the axle in V blocks that are 100 mm (3.94 in.) [A] apart, and set a dial gauge [B] on the axle at a point halfway between the blocks. Turn [C] the axle to measure the runout. The difference between the highest and lowest dial readings is the amount of runout.

★If axle runout exceeds the service limit, replace the axle.

Axle Runout/100 mm (3.94 in.)

Standard:	**TIR 0.03 mm (0.0012 in.) or less**
Service Limit:	**TIR 0.2 mm (0.008 in.)**

Balance Inspection

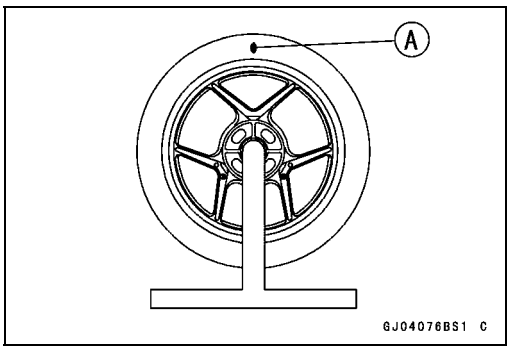

- Remove the front and rear wheels (see Front/Rear Wheel Removal).
- Support the wheel so that it can be spun freely.
- Spin the wheel lightly, and mark [A] the wheel at the top when the wheel stops.

○Repeat this procedure several times. If the wheel stops of its own accord in various positions, it is well balanced.

★If the wheel always stops in one position, adjust the wheel balance (see Balance Adjustment).

Balance Adjustment

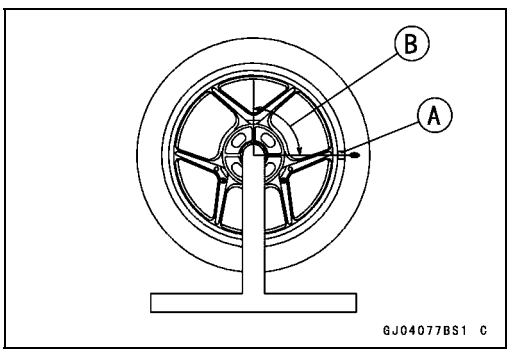

- If the wheel always stops in one position, provisionally attach a balance weight [A] on the rim at the marking using adhesive tape.
- Rotate the wheel 1/4 turn [B], and see whether or not the wheel stops in this position. If it does, the correct balance weight is being used.

★If the wheel rotates and the weight goes up, replace the weight with the next heavier size. If the wheel rotates and the weight goes down, replace the weight with the next lighter size. Repeat these steps until the wheel remains at rest after being rotated 1/4 turn.

- Rotate the wheel another 1/4 turn and then another 1/4 turn to see if the wheel is correctly balanced.
- Repeat the entire procedure as many times as necessary to achieve correct wheel balance.
- Permanently install the balance weight.

Balance Weight Removal

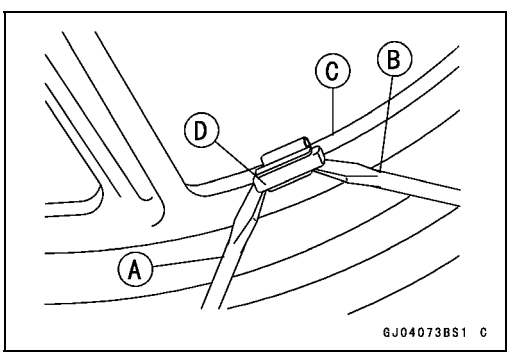

- Insert a regular tip screwdrivers [A] [B] between the rib [C] and the weight [D] as shown in the figure.
- Pry the balance weight with two screwdrivers and remove the balance weight.
- Discard the used balance weight.

NOTICE

Do not tap the screwdrivers. The rim could be damaged.

Wheels (Rims)

Balance Weight Installation

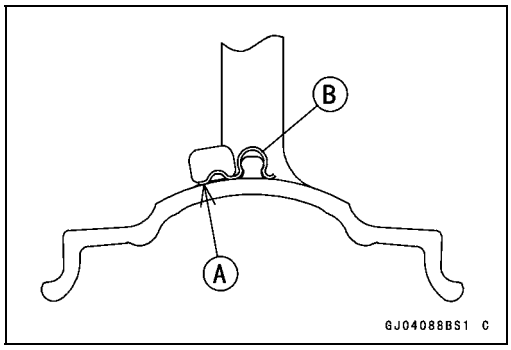

- Check if the weight portion has any play on the blade [A] and clip [B].

★If it does, discard it.

⚠ WARNING

Unbalanced wheels can create an unsafe riding condition. If the balance weight has any play on the rib of the rim, the blade and/or clip have been stretched. Replace the loose balance weight. Do not reuse used balance weight.

Balance Weight

Part Number	Weight
41075-0007	10 g (0.35 oz.)
41075-0008	20 g (0.71 oz.)
41075-0009	30 g (1.06 oz.)

NOTE

○*Balance weights are available from Kawasaki dealers in 10, 20, and 30 grams (0.35, 0.71, and 1.06 oz.) sizes. An imbalance of less than 10 grams (0.35 oz.) will not usually affect running stability.*

○*Do not use four or more balance weight (more than 90 gram, 3.17 oz.). If the wheel requires an excess balance weight, disassemble the wheel to find the cause.*

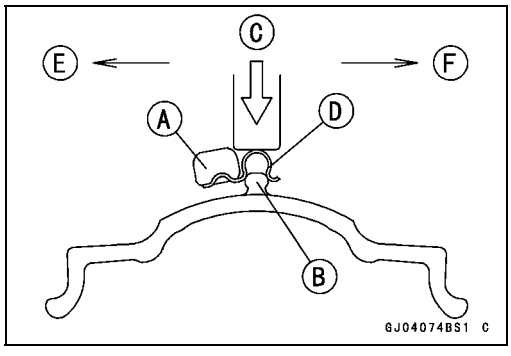

- Slip the balance weight [A] onto the rib [B] by pushing or lightly hammering [C] the clip [D].
  Left Side [E]
  Right Side [F]

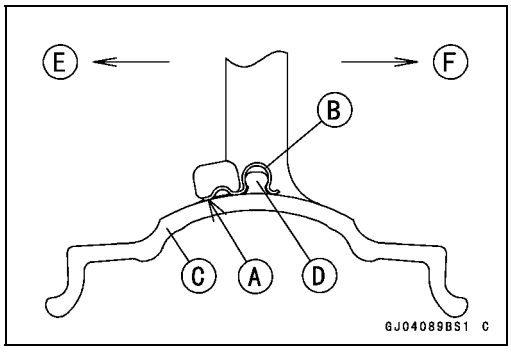

- Be sure to install the balance weight.

○Check that the blade [A] and clip [B] are fully seated on the rim [C] and that the clip is hooked over the rib [D].
  Left Side [E]
  Right Side [F]

Tires

Air Pressure Inspection/Adjustment

- Refer to the Air Pressure Inspection in the Periodic Maintenance chapter.

Tire Inspection

- Refer to the Wheel/Tire Damage Inspection in the Periodic Maintenance chapter.

Tire Removal

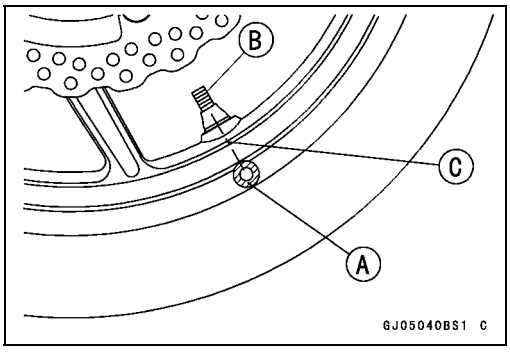

- Remove:
  Wheels (see Front/Rear Wheel Removal)
  Valve Core (Let out the air)
- To maintain wheel balance, mark the valve stem position on the tire with chalk so that the tire can be reinstalled in the same position.
  Chalk Mark or Yellow Mark [A]
  Air Valve [B]
  Align [C]
- Lubricate the tire beads and rim flanges on both sides with a soap and water solution or rubber lubricant. This helps the tire beads slip off the rim flanges.

NOTICE

Never lubricate with engine oil or petroleum distillates because they will deteriorate the tire.

- Remove the tire from the rim using a suitable commercially available tire changer.

NOTE

○*The tires cannot be removed with hand tools because they fit the rims too tightly.*

Tire Installation

⚠ WARNING

Some replacement tires may adversely affect handling and cause an accident resulting in serious injury or death. To ensure proper handling and stability, use only the recommended standard tires for replacement, inflated to the standard pressure.

- Inspect the rim and tire, and replace them if necessary.
- Clean the sealing surfaces of the rim and tire, and smooth the sealing surfaces of the rim with a fine emery cloth if necessary.
- Remove the air valve and discard it.

NOTICE

Replace the air valve whenever the tire is replaced. Do not reuse the air valve.

Tires

- Install a new valve in the rim.

○Remove the valve cap, lubricate the stem seal [A] with a soap and water solution or rubber lubricant, and pull [B] the valve stem through the rim from the inside out until it snaps into place.

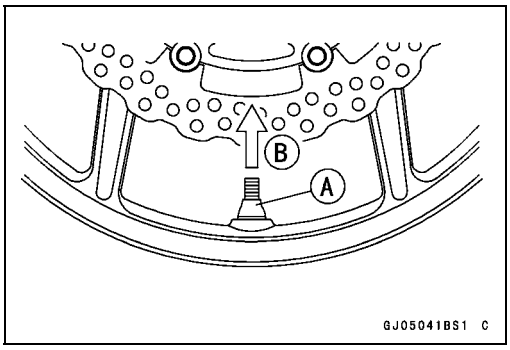

NOTICE

Do not use engine oil or petroleum distillates to lubricate the stem because they will deteriorate the rubber.

○The air valve is shown in the figure.
Valve Cap [A]
Valve Core [B]
Stem Seal [C]
Valve Stem [D]
Valve Seat [E]
Valve Opened [F]

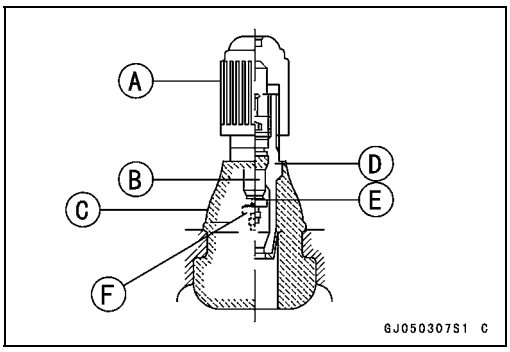

- Check the tire rotation mark on the front and rear tires and install them on the rim accordingly.
  Tire Rotation Mark [A]
  Rotating Direction [B]

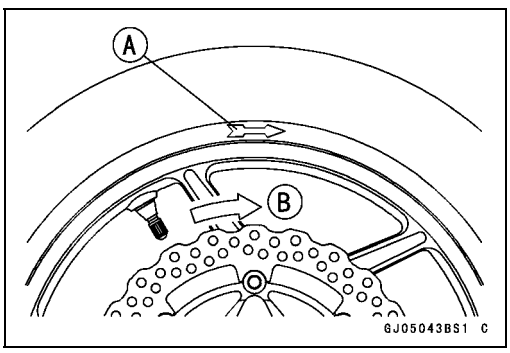

- Position the tire on the rim so that the air valve [A] align with the tire balance mark [B] (the chalk mark made during removal, or the yellow paint mark on a new tire).
- Install the tire bead over the rim flange using a suitable commercially available tire changer.
- Lubricate the tire beads and rim flanges with a soap and water solution or rubber lubricant to help seat the tire beads in the sealing surfaces of the rim while inflating the tire.
- Center the rim in the tire beads, and inflate the tire with compressed air until the tire beads seat in the sealing surfaces.

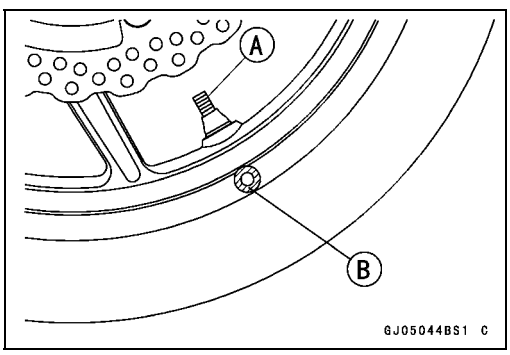

⚠ WARNING

Overinflating a tire can cause it to explode, causing serious injury or death. Be sure to install the valve core whenever inflating the tire, and do not inflate the tire to more than 400 kPa (4.0 kgf/cm², 57 psi).

Tires

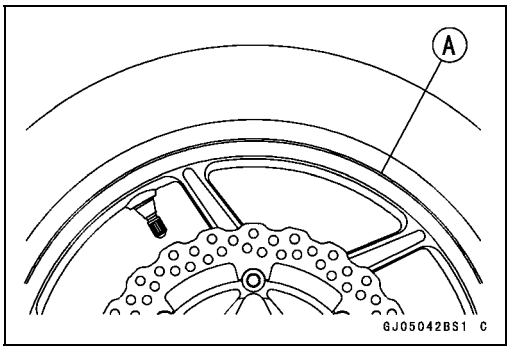

- Check to see that the rim lines [A] on both sides of the tire sidewalls are parallel with the rim flanges.

★If the rim flanges and tire sidewall rim lines are not parallel, remove the valve core.

- Lubricate the rim flanges and tire beads.
- Install the valve core and inflate the tire again.
- After the tire beads seat in the rim flanges, check for air leakage.

○Inflate the tire slightly above standard inflation.

○Use a soap and water solution or submerge the tire, and check for bubbles that would indicate leakage.

- Adjust the air pressure to the specified pressure (see Air Pressure Inspection in the Periodic Maintenance chapter).
- Install the air valve cap.
- Adjust the wheel balance (see Balance Adjustment).

Tire Repair

Currently two types of repair for tubeless tires have come into wide use. One type is called a temporary (external) repair which can be carried out without removing the tire from the rim, and the other type is called permanent (internal) repair which requires tire removal. It is generally understood that higher running durability is obtained by permanent (internal) repairs than by temporary (external) ones. Also, permanent (internal) repairs have the advantage of permitting a thorough examination for secondary damage not visible from external inspection of the tire. For these reasons, Kawasaki does not recommend temporary (external) repair. Only appropriate permanent (internal) repairs are recommended. Repair methods may vary slightly from make to make. Follow the repair methods indicated by the manufacturer of the repair tools and materials so that safe results can be obtained.

Hub Bearing

Hub Bearing Removal

- Remove the wheels (see Front/Rear Wheel Removal), and take out the following.
  Collars [A]
  Coupling [B] (Out of rear hub)
  Grease Seals [C]
  Front Wheel [D]
  Rear Wheel [E]

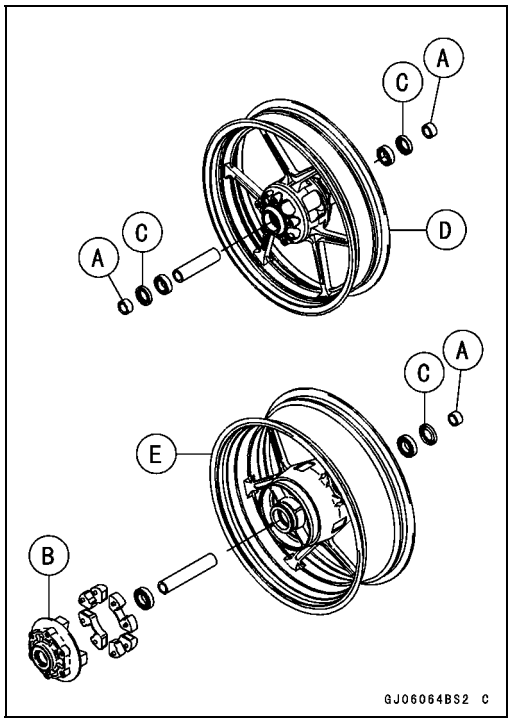

- Use the bearing remover to remove the hub bearings [A].

NOTICE

Do not lay the wheel on the ground with the disc facing down. This can damage or warp the disc. Place wooden blocks under the wheel so that the disc does not touch the ground.

Special Tools - Bearing Remover Head, ϕ20 × ϕ22 [B]: 57001-1293
Bearing Remover Shaft, ϕ13 [C]: 57001-1377

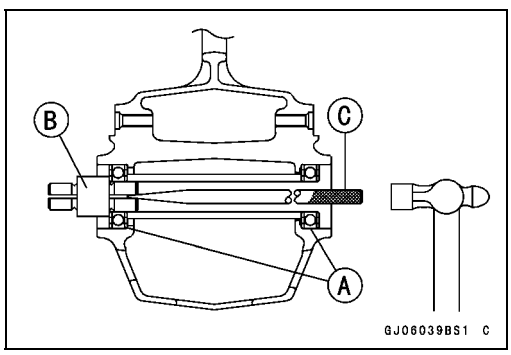

Hub Bearing Installation

- Before installing the hub bearings, blow any dirt or foreign particles out of the hub with compressed air to prevent contamination of the bearings.
- Replace the bearings with new ones.
- Install the bearings by using the bearing driver set which does not contact the bearing inner race.

NOTE

○*Install the bearings so that the marked side faces out.*

- Press in each bearing [A] right until they are bottomed.

Special Tool - Bearing Driver Set [B]: 57001-1129

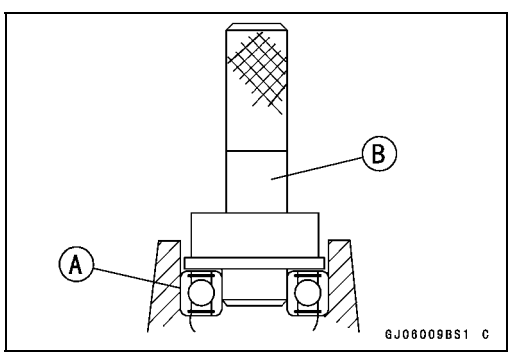

Hub Bearing

- Replace the grease seals with new ones.
- Press in the grease seals [A] so that the seal surface is flush [B] with the end of the hole.

○Apply high-temperature grease to the grease seal lips.

Special Tool - Bearing Driver Set [C]: 57001-1129

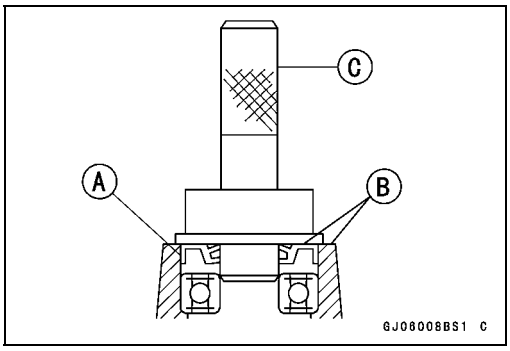

Hub Bearing Inspection

Since the hub bearings are made to extremely close tolerances, the clearance can not normally be measured.

NOTE

○*Do not remove any bearings for inspection. If any bearings are removed, they will need to be replaced with new ones.*

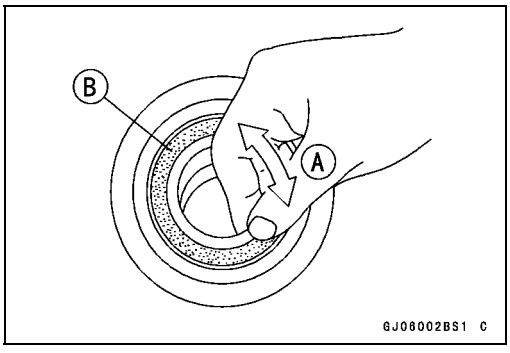

- Turn each bearing in the hub back and forth [A] while checking for plays, roughness, or binding.

★If bearing play, roughness, or binding is found, replace the bearing.

- Examine the bearing seal [B] for tears or leakage.

★If the seal is torn or is leaking, replace the bearing.

Hub Bearing Lubrication

NOTE

○*Since the hub bearings are packed with grease and sealed, lubrication is not required.*

Final Drive

Table of Contents

Exploded View 11-2
Specifications 11-4
Special Tools 11-5
Drive Chain 11-6
- Drive Chain Slack Inspection 11-6
- Drive Chain Slack Adjustment 11-6
- Wheel Alignment Inspection/Adjustment 11-6
- Drive Chain Wear Inspection 11-6
- Drive Chain Lubrication 11-6
- Drive Chain Removal 11-6
- Drive Chain Installation 11-7
- Drive Chain Replacement 11-7

Sprocket, Coupling 11-11
- Engine Sprocket Removal 11-11
- Engine Sprocket Installation 11-11
- Rear Sprocket Removal 11-12
- Rear Sprocket Installation 11-12
- Coupling Installation 11-13
- Coupling Bearing Removal 11-13
- Coupling Bearing Installation 11-13
- Coupling Bearing Inspection 11-14
- Coupling Bearing Lubrication 11-14
- Coupling Damper Inspection 11-14
- Sprocket Wear Inspection 11-14
- Rear Sprocket Warp Inspection 11-15

Exploded View

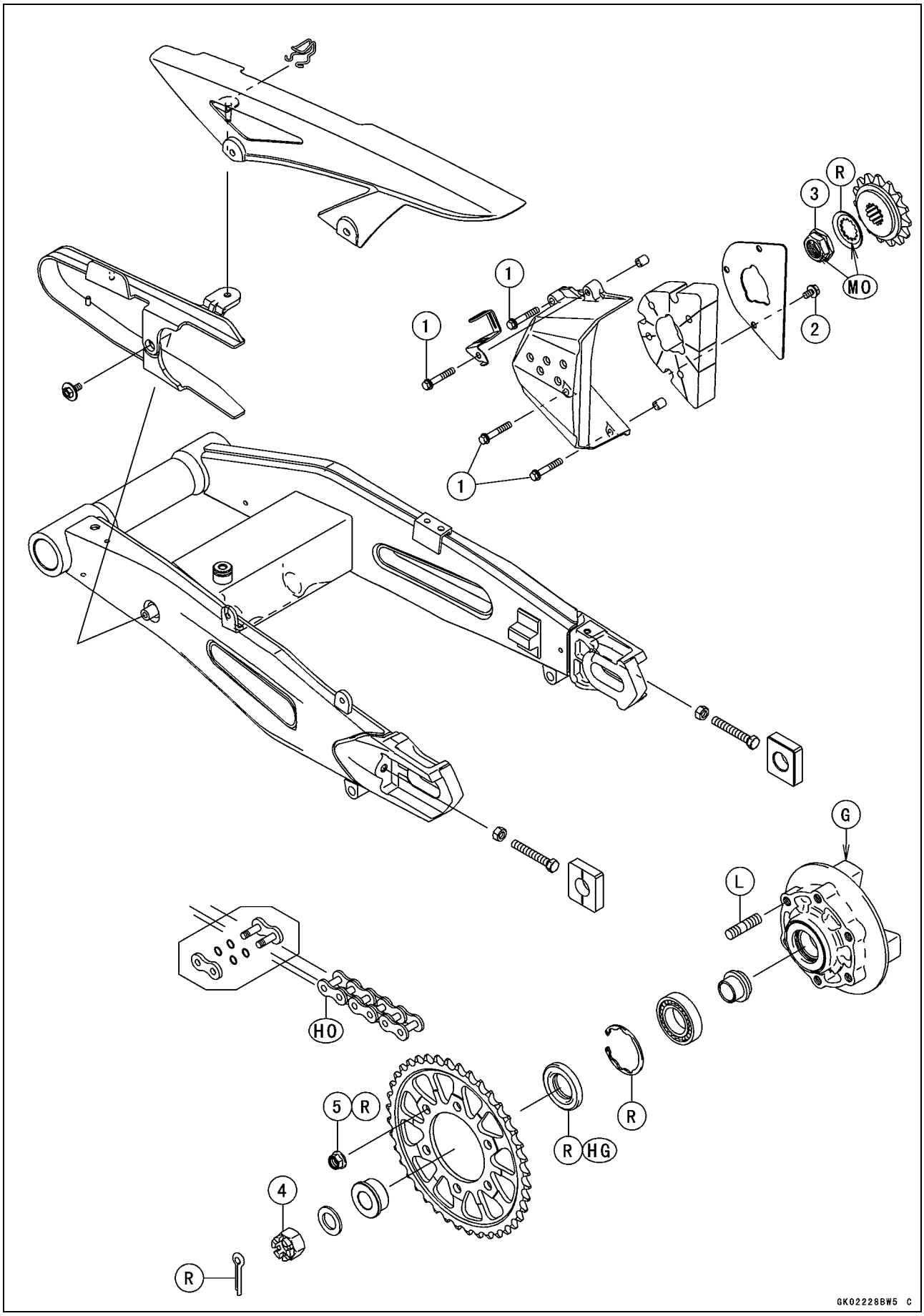

Exploded View

No.	Fastener	Torque			Remarks
		N·m	kgf·m	ft·lb	
1	Engine Sprocket Cover Bolts	9.8	1.0	87 in·lb	
2	Engine Sprocket Cover Plate Bolts	9.8	1.0	87 in·lb	
3	Engine Sprocket Nut	125	12.7	92.2	MO
4	Rear Axle Nut	108	11.0	79.7	
5	Rear Sprocket Nuts	59	6.0	44	R

G: Apply grease.
HG: Apply high-temperature grease.
HO: Apply heavy oil.
L: Apply a non-permanent locking agent.
MO: Apply molybdenum disulfide oil solution.
(mixture of the engine oil and molybdenum disulfide grease in a weight ratio 10:1)
R: Replacement Parts

Specifications

Item	Standard	Service Limit
Drive Chain		
Drive Chain Slack	30 ~ 40 mm (1.2 ~ 1.6 in.)	– – –
Drive Chain Wear (20-link Length)	317.5 ~ 318.2 mm (12.50 ~ 12.53 in.)	323 mm (12.7 in.)
Standard Chain:		
Make	ENUMA	– – –
Type:		
ZR750NB/PB Early Models	EK520MVXL1	– – –
ZR750NB/PB Late Models ~	EK520MVXL2	– – –
Link	112 links	– – –
Sprockets		
Rear Sprocket Warp	0.4 mm (0.016 in.) or less	0.5 mm (0.020 in.)

Special Tools

Inside Circlip Pliers:
57001-143

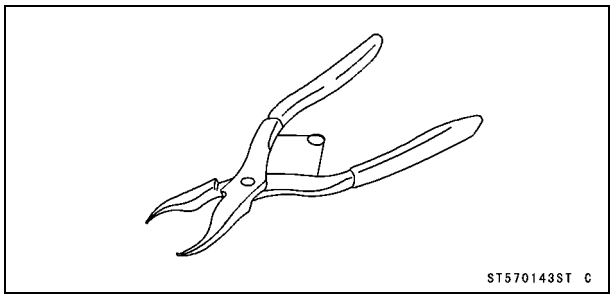

Bearing Driver Set:
57001-1129

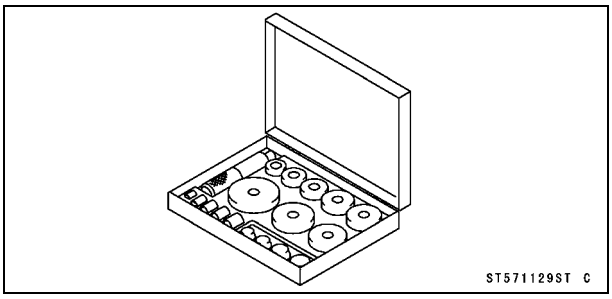

Drive Chain

Drive Chain Slack Inspection

- Refer to the Drive Chain Slack Inspection in the Periodic Maintenance chapter.

Drive Chain Slack Adjustment

- Refer to the Drive Chain Slack Adjustment in the Periodic Maintenance chapter.

Wheel Alignment Inspection/Adjustment

- Refer to the Wheel Alignment Inspection in the Periodic Maintenance chapter.

Drive Chain Wear Inspection

- Refer to the Drive Chain Wear Inspection in the Periodic Maintenance chapter.

Drive Chain Lubrication

- Refer to the Drive Chain Lubrication Condition Inspection in the Periodic Maintenance chapter.

Drive Chain Removal

- Remove:
  Rear Wheel (see Rear Wheel Removal in the Wheels/Tires chapter)
  Chain Cover Bolts [A]

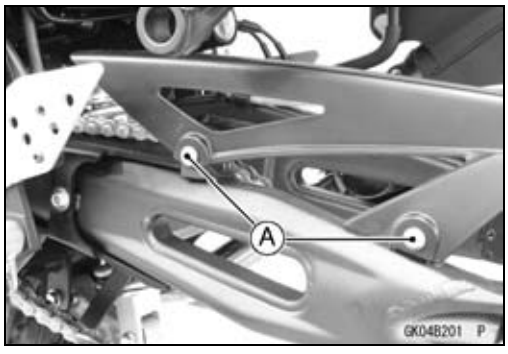

- Remove:
  Clamp [A]
  Chain Cover [B]
  Swingarm (see Swingarm Removal in the Suspension chapter)

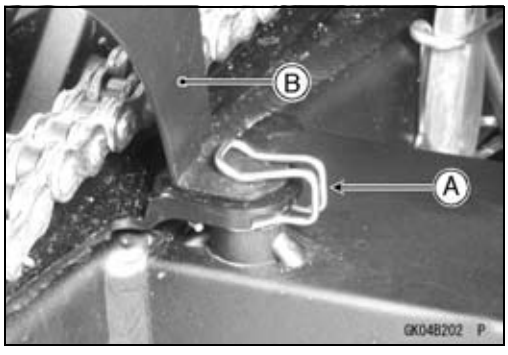

- Remove the engine sprocket cover (see Engine Sprocket Removal).
- Remove the drive chain [A] from the engine sprocket [B], and take it off the chassis.

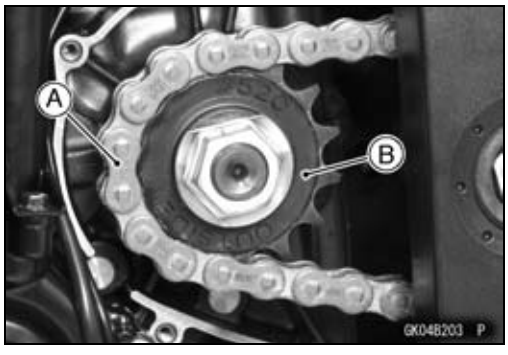

Drive Chain

Drive Chain Installation

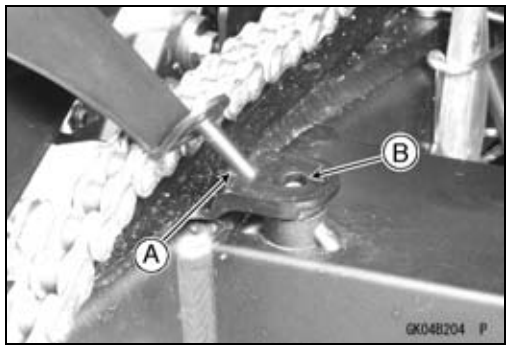

- Install the drive chain to the engine sprocket.
- Install:
  Swingarm (see Swingarm Installation in the Suspension chapter)
  Rear Wheel (see Rear Wheel Installation in the Wheels/Tires chapter)
  Engine Sprocket Cover (Engine Sprocket Installation)
- Insert the projection [A] on the chain cover into the swingarm hole [B].
- Adjust the drive chain slack after installing the chain (see Drive Chain Slack Adjustment in the Periodic Maintenance chapter).

Drive Chain Replacement

- Remove:
  Chain Cover (see Drive Chain Removal)
  Engine Sprocket Cover (see Engine Sprocket Removal)

NOTICE

For safety, if the drive chain shall be replaced, replace it using a recommended tool.

Recommended Tool - Type: EK Joint Tool #50
Brand: ENUMA

Body [A]
Handlebar [B]
Cutting and Riveting Pin [C]
For Cutting [D]
For Riveting [E]
Plate Holder (A) [F]
Plate Holder (B) [G]
Gauge [H]

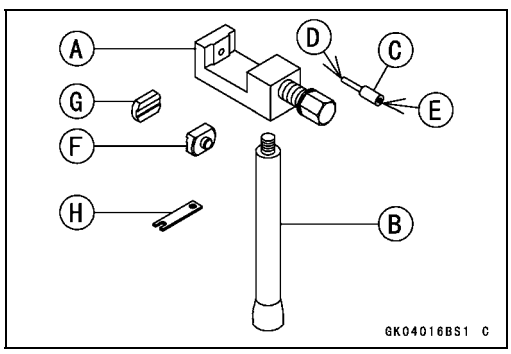

- Grind [A] the pin head to make it flat.
- Set the cutting and riveting pin [B] as shown in the figure.

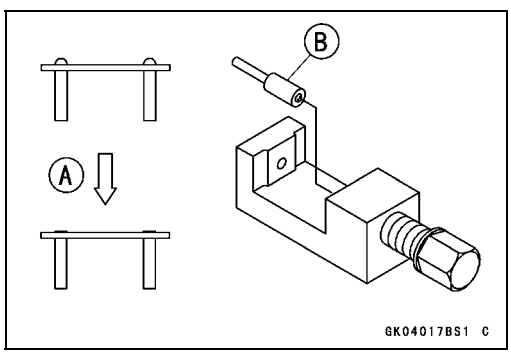

Drive Chain

- Screw the pin holder until it touches chain pin.
- Be sure that the cutting pin hits center of chain pin.

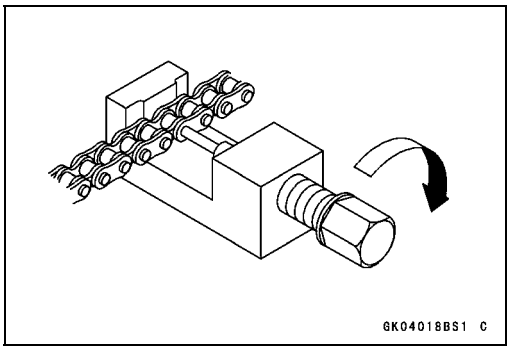

- Screw the handlebar [A] into body.
- Turn the pin holder with wrench [B] clockwise to extract chain pin.

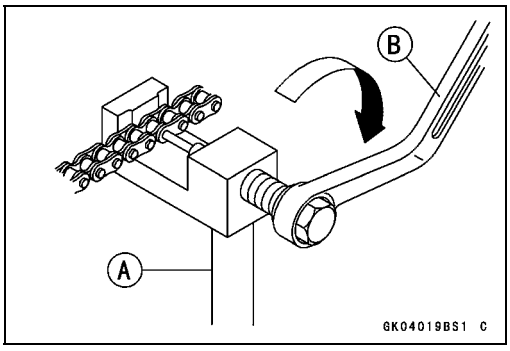

- Replace the link pin, link plate and grease seals.
- Apply grease to the link pins [A] and grease seals [B] [C].
- Engage the drive chain on the engine and rear sprockets.
- Insert the link pins in the drive chain ends.
- Install the grease seals.
- Install the link plate so that the mark [D] faces out.
- Push the link plate by hand or plier to fix it.
- In case of grease seals chain, be sure to set the grease seals correctly.

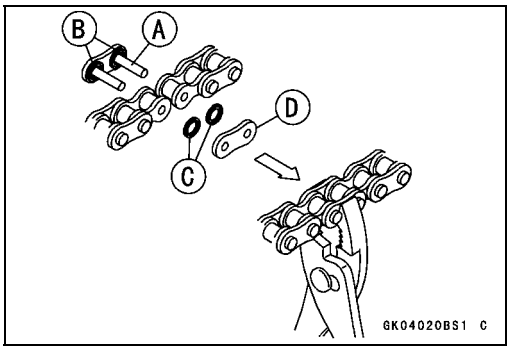

- Set the plate holder (A) [A] and plate holder (B) [B] on the body.

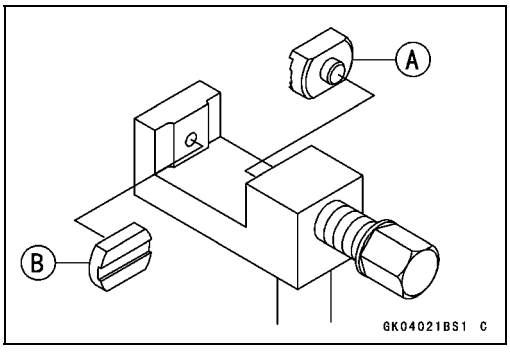

- Fit the plate holder (A) to link plate.
- Turn the pin holder by hand until plate holder (B) touches the other link plate.

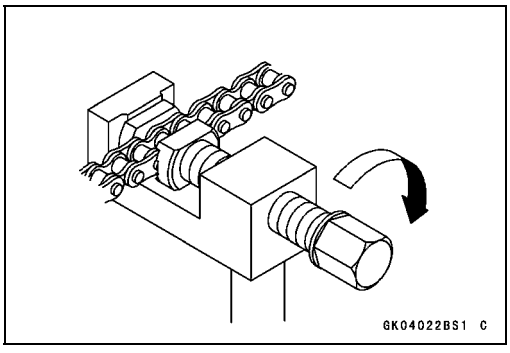

Drive Chain

- Turn the pin holder by wrench clockwise until two pins of link come into groove of plate holder (A).
- Take off the plate holder.

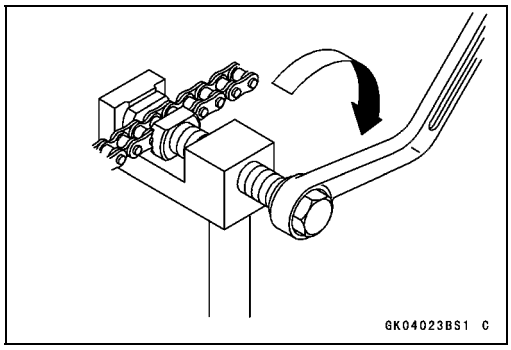

- Set the plate holder (B) [A] and cutting and riveting pin [B] as shown in the figure.

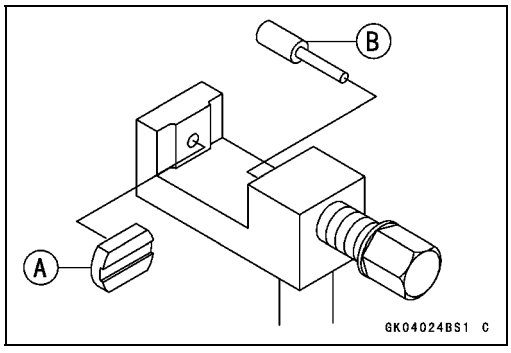

- Turn the pin holder until riveting pin touches link pin.

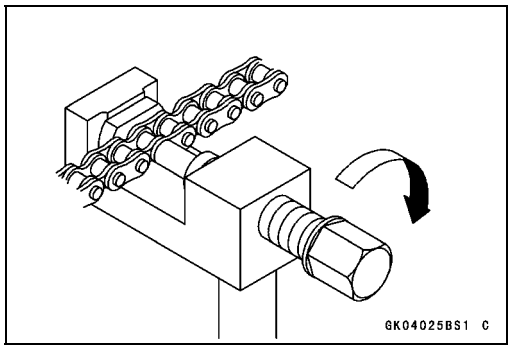

- Turn the wrench clockwise until tip of riveting pin hits of link pin.
- Rivet it.
- Same work for the other link pin.

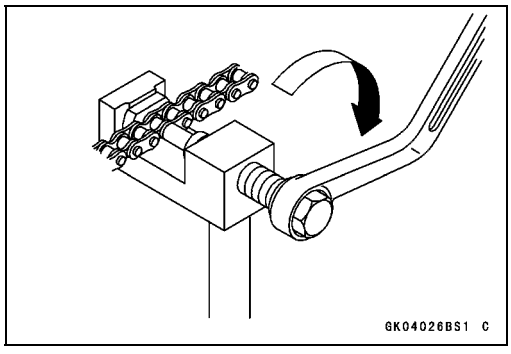

Drive Chain

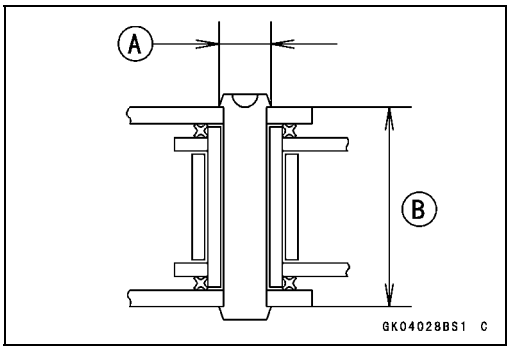

- After staking, check the staked area of the link pin for cracks.
- Measure the outside diameter [A] of the link pin and link plates width [B].

Link Pin Outside Diameter
Standard: 5.7 ~ 6.0 mm (0.22 ~ 0.24 in.)

Link Plates Outside Width
Standard: 17.25 ~ 17.45 mm (0.679 ~ 0.687 in.)

★If the reading exceeds the specified length, cut and rejoin the chain again.

- Check:
  Movement of the Rollers
- Adjust the drive chain slack after installing the chain (see Drive Chain Slack Adjustment in the Periodic Maintenance chapter).

Sprocket, Coupling

Engine Sprocket Removal

- Remove:
  Engine Sprocket Cover Bolts [A]
  Engine Sprocket Cover [B]

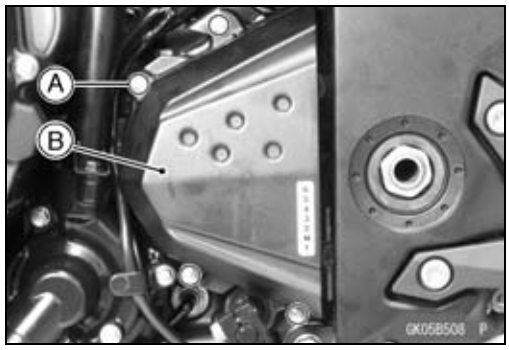

- Flatten out the bended washer [A].
- Remove the engine sprocket nut [B] and washer.

NOTE

○*When loosening the engine sprocket nut, hold the rear brake on.*

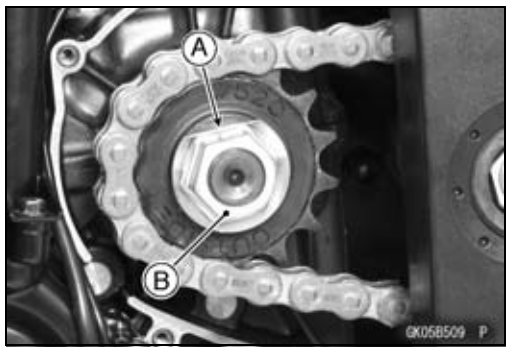

- Raise the rear wheel off the ground with the stand.
- Loosen the drive chain (see Drive Chain Slack Adjustment in the Periodic Maintenance chapter).
- Remove the drive chain from the rear sprocket toward the right.
- Disengage the drive chain [A] from the engine sprocket [B].
- Pull the engine sprocket off the output shaft [C].

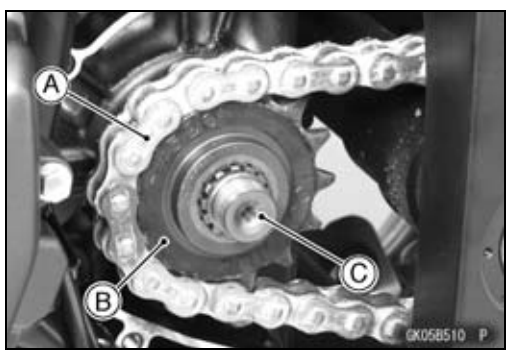

Engine Sprocket Installation

- Replace the sprocket washer and axle cotter pin.
- Install the engine sprocket so that “OUTSIDE” letters [A] face outward.
- Apply molybdenum disulfide oil solution to the threads and the seating surface of the engine sprocket nut.
- Tighten:

  Torque - Engine Sprocket Nut: 125 N·m (12.7 kgf·m, 92.2 ft·lb)

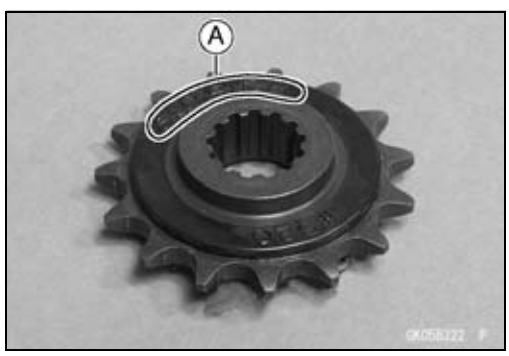

NOTE

○*Tighten the nut while applying the rear brake.*

- After torquing the engine sprocket nut, bend the one side of the washer over the nut.

- Be sure to install the dowel pins [A].

- Install the engine sprocket cover [A].
- Install the clamp [B] as shown in the figure, and tighten the cover bolts [C].

  Torque - Engine Sprocket Cover Bolts: 9.8 N·m (1.0 kgf·m, 87 in·lb)

- Adjust the drive chain slack after installing the engine sprocket (see Drive Chain Slack Adjustment in the Periodic Maintenance chapter).

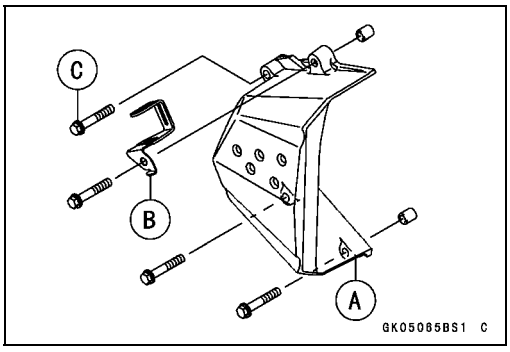

Rear Sprocket Removal

- Remove the rear wheel (see Rear Wheel Removal in the Wheels/Tires chapter).

NOTICE

Do not lay the wheel on the ground with the disc facing down. This can damage or warp the disc. Place blocks under the wheel so that the disc does not touch the ground.

- Remove the rear sprocket nuts [A].
- Remove the rear sprocket [B].

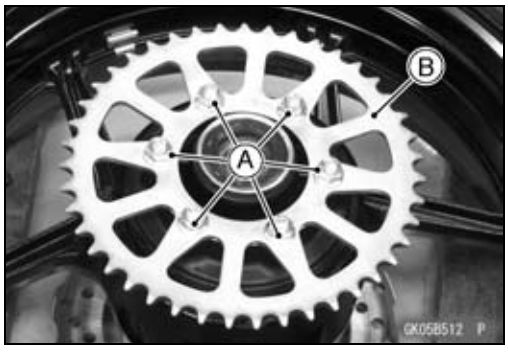

Rear Sprocket Installation

- Install the sprocket facing the tooth number marking [A] outward.
- Replace the rear sprocket nuts with new ones.
- Tighten:

  Torque - Rear Sprocket Nuts: 59 N·m (6.0 kgf·m, 44 ft·lb)

- Install the rear wheel (see Rear Wheel Installation in the Wheels/Tires chapter).

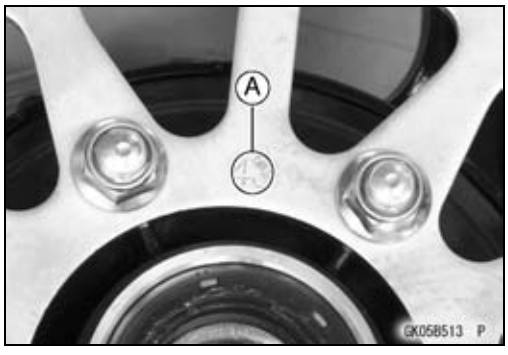

Sprocket, Coupling

Coupling Installation

- Apply high-temperature grease to the coupling grease seal lips [A].
- Apply grease to the coupling internal surface [B].

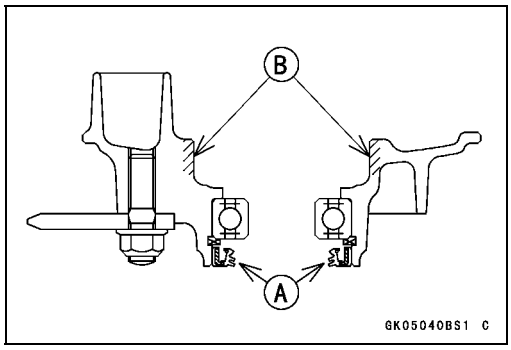

- Grease the following.
  Wheel Flange Portion [A]
  O-ring [B]
- Install the collar [C].

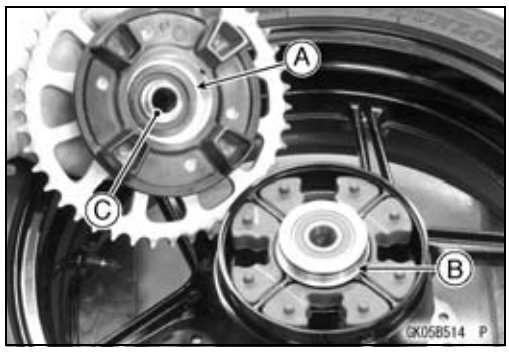

Coupling Bearing Removal

- Remove:
  Coupling
  Grease Seal
  Circlip [A]

  Special Tool - Inside Circlip Pliers: 57001-143

- Remove the bearing [A] by tapping from the wheel side.

  Special Tool - Bearing Driver Set [B]: 57001-1129

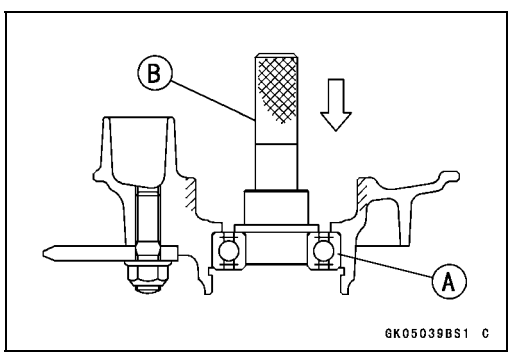

Coupling Bearing Installation

- Replace the bearing with a new one.
- Press in the bearing [A] until it is bottomed.

  Special Tool - Bearing Driver Set [B]: 57001-1129
- Replace the circlip with a new one.

  Special Tool - Inside Circlip Pliers: 57001-143

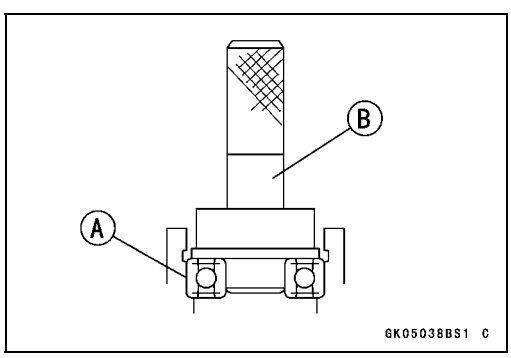

Sprocket, Coupling

- Replace the grease seal with a new one.
- Press in the grease seal so that the seal surface is flush with the end of the hole.

○Apply high-temperature grease to the grease seal lips.

Special Tool - Bearing Driver Set: 57001-1129

Coupling Bearing Inspection

Since the coupling bearing is made to extremely close tolerances, the clearance can not normally be measured.

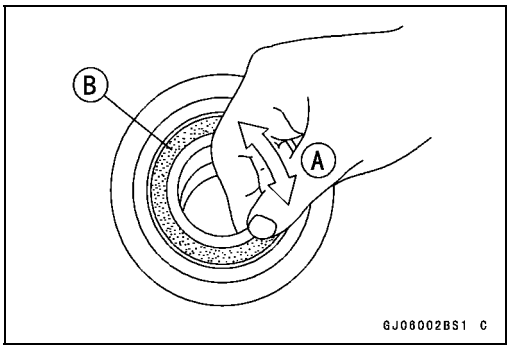

NOTE

○*It is not necessary to remove the coupling bearing for inspection. If the bearing is removed, it will need to be replaced with a new one.*

- Turn the bearing in the coupling back and forth [A] while checking for plays, roughness or binding.

★If the bearing play, roughness or binding is found, replace the bearing.

- Examine the bearing seal [B] for tears or leakage.

★If the seal is torn or is leaking, replace the bearing.

Coupling Bearing Lubrication

NOTE

○*Since the coupling bearing is packed with grease and sealed, lubrication is not required.*

Coupling Damper Inspection

- Remove the rear wheel coupling, and inspect the rubber dampers [A].
- Replace the damper if it appears damaged or deteriorated.

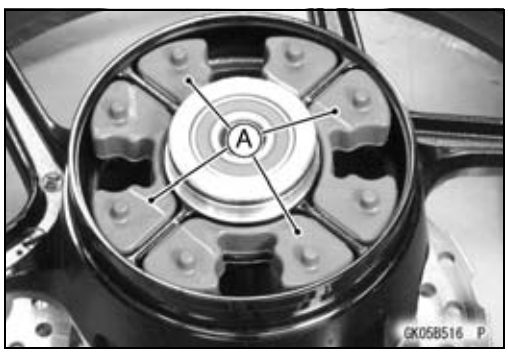

Sprocket Wear Inspection

- Visually inspect the engine and rear sprocket teeth for wear and damage.

★If the teeth are worn as illustrated, replace the sprocket, and inspect the drive chain wear (see Drive Chain Wear Inspection in the Periodic Maintenance chapter).

Worn Tooth (Engine Sprocket) [A]
Worn Tooth (Rear Sprocket) [B]
Direction of Rotation [C]

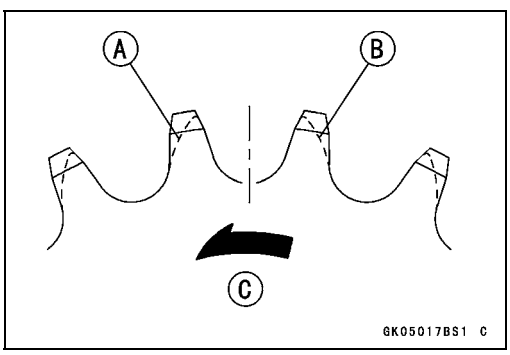

NOTE

○*If a sprocket requires replacement, the chain is probably worn also. When replacing a sprocket, inspect the chain.*

Sprocket, Coupling

Rear Sprocket Warp Inspection

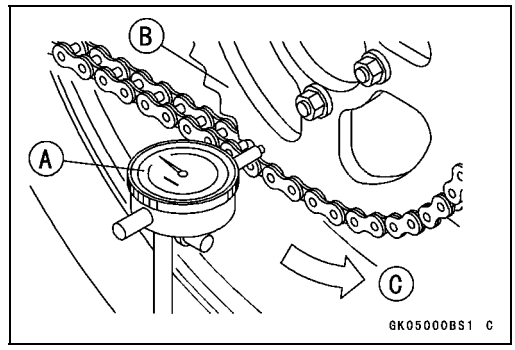

- Raise the rear wheel off the ground with the stand so that it will turn freely.
- Set a dial gauge [A] against the rear sprocket [B] near the teeth as shown in the figure, and rotate [C] the rear wheel to measure the sprocket runout (warp). The difference between the highest and lowest dial gauge readings is the amount of runout (warp).

★If the runout exceeds the service limit, replace the rear sprocket.

Rear Sprocket Warp

Standard: 0.4 mm (0.016 in.) or less

Service Limit: 0.5 mm (0.020 in.)

Brakes

Table of Contents

Exploded View 12-4
Specifications 12-12
Special Tools 12-13
Brake Lever, Brake Pedal 12-14
- Brake Lever Position Adjustment 12-14
- Brake Pedal Position Inspection 12-14
- Brake Pedal Position Adjustment 12-14
- Brake Pedal Removal 12-14
- Brake Pedal Installation 12-15

Calipers 12-16
- Front Caliper Removal 12-16
- Rear Caliper Removal 12-16
- Caliper Installation 12-16
- Front Caliper Disassembly 12-17
- Front Caliper Assembly 12-17
- Rear Caliper Disassembly 12-17
- Rear Caliper Assembly 12-18
- Caliper Fluid Seal Damage Inspection 12-18
- Caliper Dust Seal Damage Inspection 12-18
- Caliper Piston and Cylinder Damage 12-19

Brake Pads 12-20
- Front Brake Pad Removal 12-20
- Front Brake Pad Installation 12-20
- Rear Brake Pad Removal 12-20
- Rear Brake Pad Installation 12-21
- Brake Pad Wear Inspection 12-21

Master Cylinder 12-22
- Front Master Cylinder Removal 12-22
- Front Master Cylinder Installation 12-22
- Rear Master Cylinder Removal 12-22
- Rear Master Cylinder Installation 12-22
- Front Master Cylinder Disassembly 12-23
- Rear Master Cylinder Disassembly 12-23
- Master Cylinder Assembly 12-23
- Master Cylinder Inspection (Visual Inspection) 12-23

Brake Disc 12-24
- Brake Disc Removal 12-24
- Brake Disc Installation 12-24
- Brake Disc Wear Inspection 12-24
- Brake Disc Warp Inspection 12-24

Brake Fluid 12-25
- Brake Fluid Level Inspection 12-25
- Brake Fluid Change 12-25
- Brake Line Bleeding 12-25

Brake Hose 12-29
- Brake Hose and Pipe Removal/Installation 12-29
- Brake Hose and Pipe Inspection 12-29

Anti-Lock Brake System (Equipped Models) 12-30
- ABS Servicing Precautions 12-33
- ABS Troubleshooting Outline 12-35

Inquiries to Rider 12-38
Self-diagnosis Outline 12-40
Self-diagnosis Procedures 12-40
Service Code Clearing Procedures 12-41
How to Read Service Codes 12-44
How to Erase Service Codes 12-44
ABS Indicator Light (LED) Inspection 12-46
ABS Indicator Light (LED) is Unlit (When the Ignition Switch turned to ON) 12-46
ABS Indicator Light (LED) Lights (When the Motorcycle is Running, - No Service Code) 12-47
Solenoid Valve Inspection (Service Code 13,14,17,18) 12-47
ABS Solenoid Valve Relay Inspection (Service Code 19) 12-47
Front, Rear Wheel Rotation Difference Abnormal (Service Code 25) 12-49
ABS Pump Motor Relay Inspection (Service Code 35) 12-49
Front Wheel Rotation Sensor Signal Abnormal (Service Code 42) 12-50
Front Wheel Rotation Sensor Wiring Inspection (Service Code 43) 12-51
Rear Wheel Rotation Sensor Signal Abnormal (Service Code 44) 12-52
Rear Wheel Rotation Sensor Wiring Inspection (Service Code 45) 12-52
Power Supply Voltage Abnormal (Under-Voltage) (Service Code 52) 12-53
Power Supply Voltage Abnormal (Over-Voltage) (Service Code 53) 12-54
ECU Inspection (Service Code 55) 12-55
ABS Hydraulic Unit Removal 12-55
ABS Hydraulic Unit Installation 12-57
ABS Hydraulic Unit Inspection 12-57
Front Wheel Rotation Sensor Removal 12-58
Front Wheel Rotation Sensor Installation 12-58
Rear Wheel Rotation Sensor Removal 12-59
Rear Wheel Rotation Sensor Installation 12-59
Wheel Rotation Sensor Inspection 12-60
Wheel Rotation Sensor Air Gap Inspection 12-60
Wheel Rotation Sensor Rotor Inspection 12-61
ABS Solenoid Valve Relay Fuse (20 A) Removal 12-61
ABS Motor Relay Fuse (30 A) Removal 12-61
ABS ECU Fuse (10 A) Removal 12-61
Fuse Installation 12-62
Fuse Inspection 12-62

This page intentionally left blank.

Exploded View

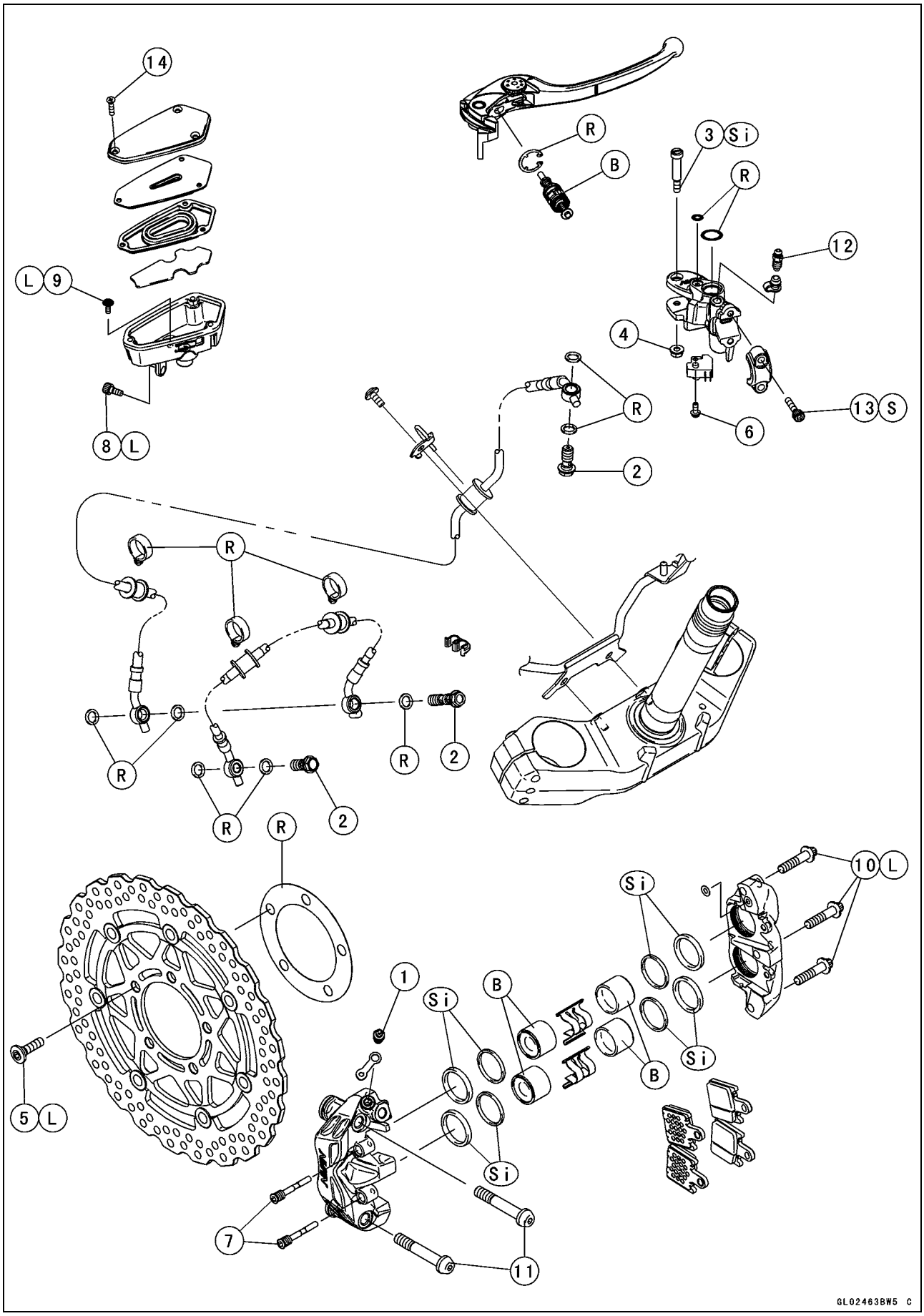

Exploded View

No.	Fastener	Torque			Remarks
		N·m	kgf·m	ft·lb	
1	Bleed Valves	7.8	0.80	69 in·lb	
2	Brake Hose Banjo Bolts	25	2.5	18	
3	Brake Lever Pivot Bolt	1.0	0.10	8.9 in·lb	Si
4	Brake Lever Pivot Bolt Locknut	5.9	0.60	52 in·lb	
5	Front Brake Disc Mounting Bolts	27	2.8	20	L
6	Front Brake Light Switch Screw	1.2	0.12	11 in·lb	
7	Front Brake Pad Pins	17.2	1.8	13	
8	Front Brake Reservoir Bolt	7.8	0.80	69 in·lb	L
9	Front Brake Reservoir Screw	1.2	0.12	11 in·lb	L
10	Front Caliper Assembly Bolts	27	2.8	20	L
11	Front Caliper Mounting Bolts	34	3.5	25	
12	Front Master Cylinder Bleed Valve	7.8	0.80	69 in·lb	
13	Front Master Cylinder Clamp Bolts	11	1.1	97 in·lb	S
14	Front Master Cylinder Reservoir Cap Screws	1.5	0.15	13 in·lb	

B: Apply brake fluid.
L: Apply a non-permanent locking agent.
R: Replacement Parts
S: Follow the specified tightening sequence.
Si: Apply silicone grease (ex. PBC grease).

Exploded View

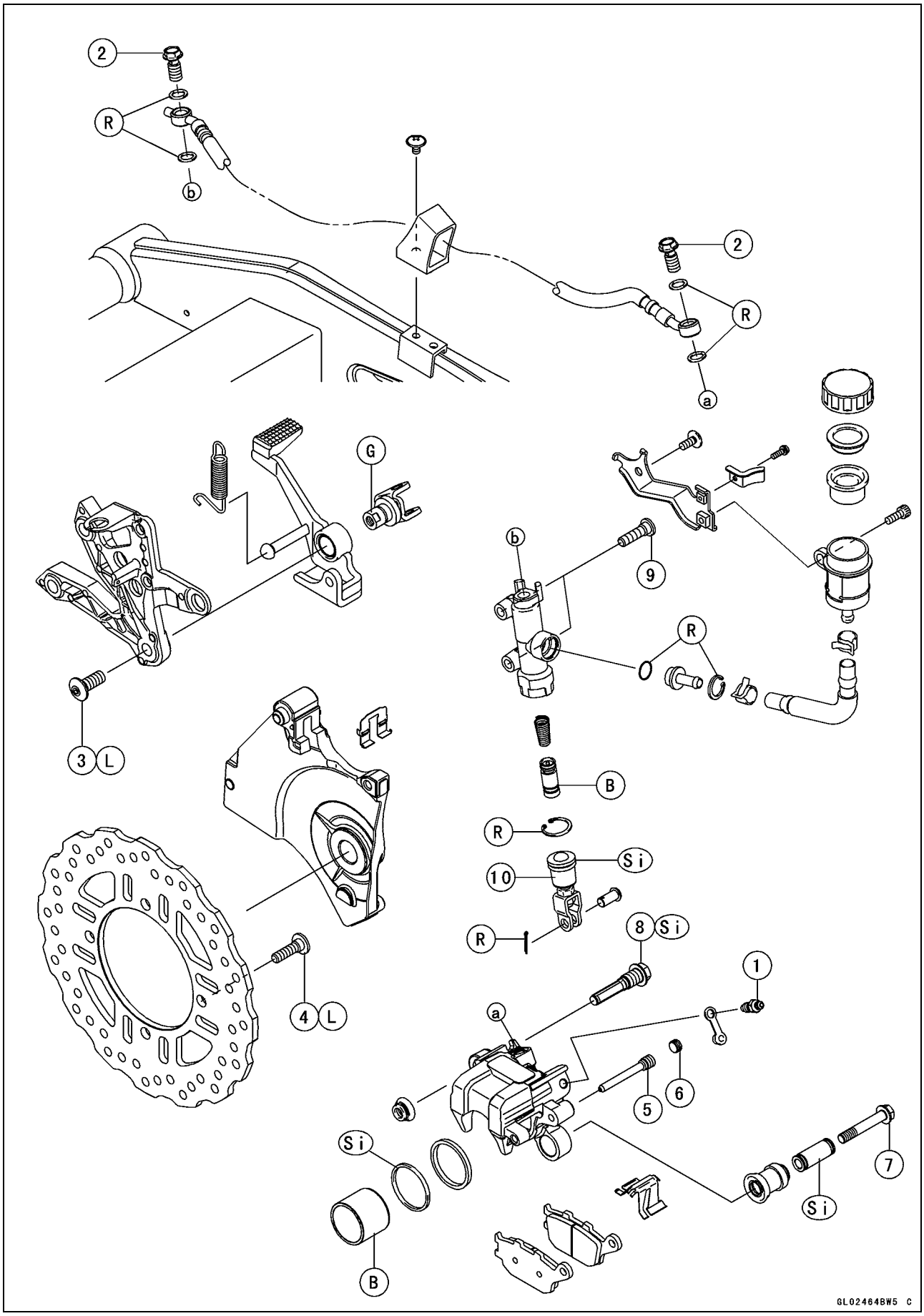

Exploded View

No.	Fastener	Torque			Remarks
		N·m	kgf·m	ft·lb	
1	Bleed Valve	7.8	0.80	69 in·lb	
2	Brake Hose Banjo Bolts	25	2.5	18	
3	Brake Pedal Bolt	34	3.5	25	L
4	Rear Brake Disc Mounting Bolts	27	2.8	20	L
5	Rear Brake Pad Pin	17.2	1.8	13	
6	Rear Brake Pad Pin Plug	2.5	0.25	22 in·lb	
7	Rear Caliper Mounting Bolt	22	2.2	16	
8	Rear Caliper Pin Bolt	27	2.8	20	Si
9	Rear Master Cylinder Mounting Bolts	25	2.5	18	
10	Rear Master Cylinder Push Rod Locknut	17.2	1.8	13	

B: Apply brake fluid.
G: Apply grease.
L: Apply a non-permanent locking agent.
R: Replacement Parts
Si: Apply silicone grease (ex. PBC grease).

Exploded View

ABS Equipped Models

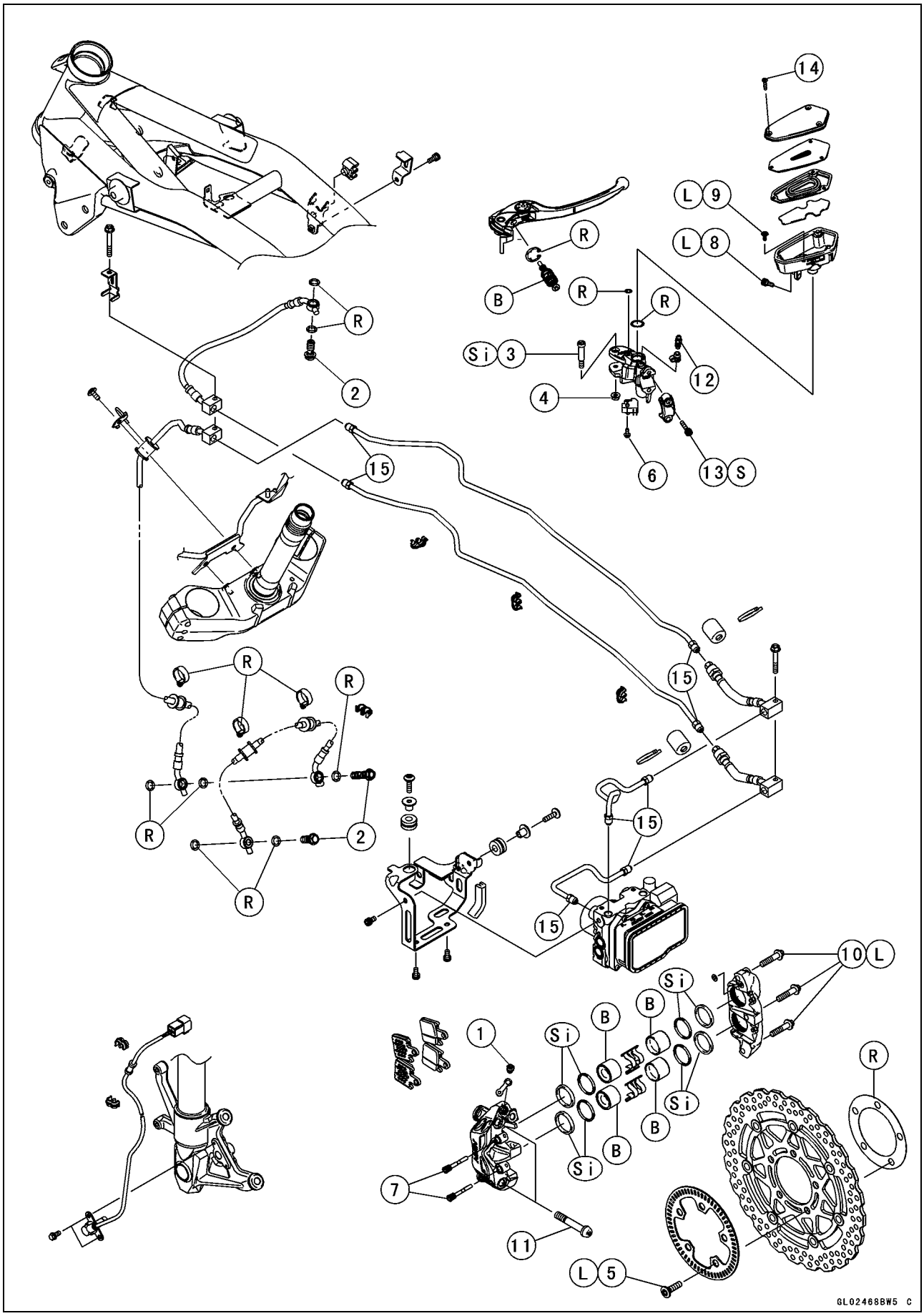

Exploded View

No.	Fastener	Torque			Remarks
		N·m	kgf·m	ft·lb	
1	Bleed Valves	7.8	0.80	69 in·lb	
2	Brake Hose Banjo Bolts	25	2.5	18	
3	Brake Lever Pivot Bolt	1.0	0.10	8.9 in·lb	Si
4	Brake Lever Pivot Bolt Locknut	5.9	0.60	52 in·lb	
5	Front Brake Disc Mounting Bolts	27	2.8	20	L
6	Front Brake Light Switch Screw	1.2	0.12	11 in·lb	
7	Front Brake Pad Pins	17.2	1.8	13	
8	Front Brake Reservoir Bolt	7.8	0.80	69 in·lb	L
9	Front Brake Reservoir Screw	1.2	0.12	11 in·lb	L
10	Front Caliper Assembly Bolts	27	2.8	20	L
11	Front Caliper Mounting Bolts	34	3.5	25	
12	Front Master Cylinder Bleed Valve	7.8	0.80	69 in·lb	
13	Front Master Cylinder Clamp Bolts	11	1.1	97 in·lb	S
14	Front Master Cylinder Reservoir Cap Screws	1.5	0.15	13 in·lb	
15	Brake Pipe Joint Nuts	18	1.8	13	

B: Apply brake fluid.
L: Apply a non-permanent locking agent.
R: Replacement Parts
S: Follow the specified tightening sequence.
Si: Apply silicone grease (ex. PBC grease).

Exploded View

ABS Equipped Models

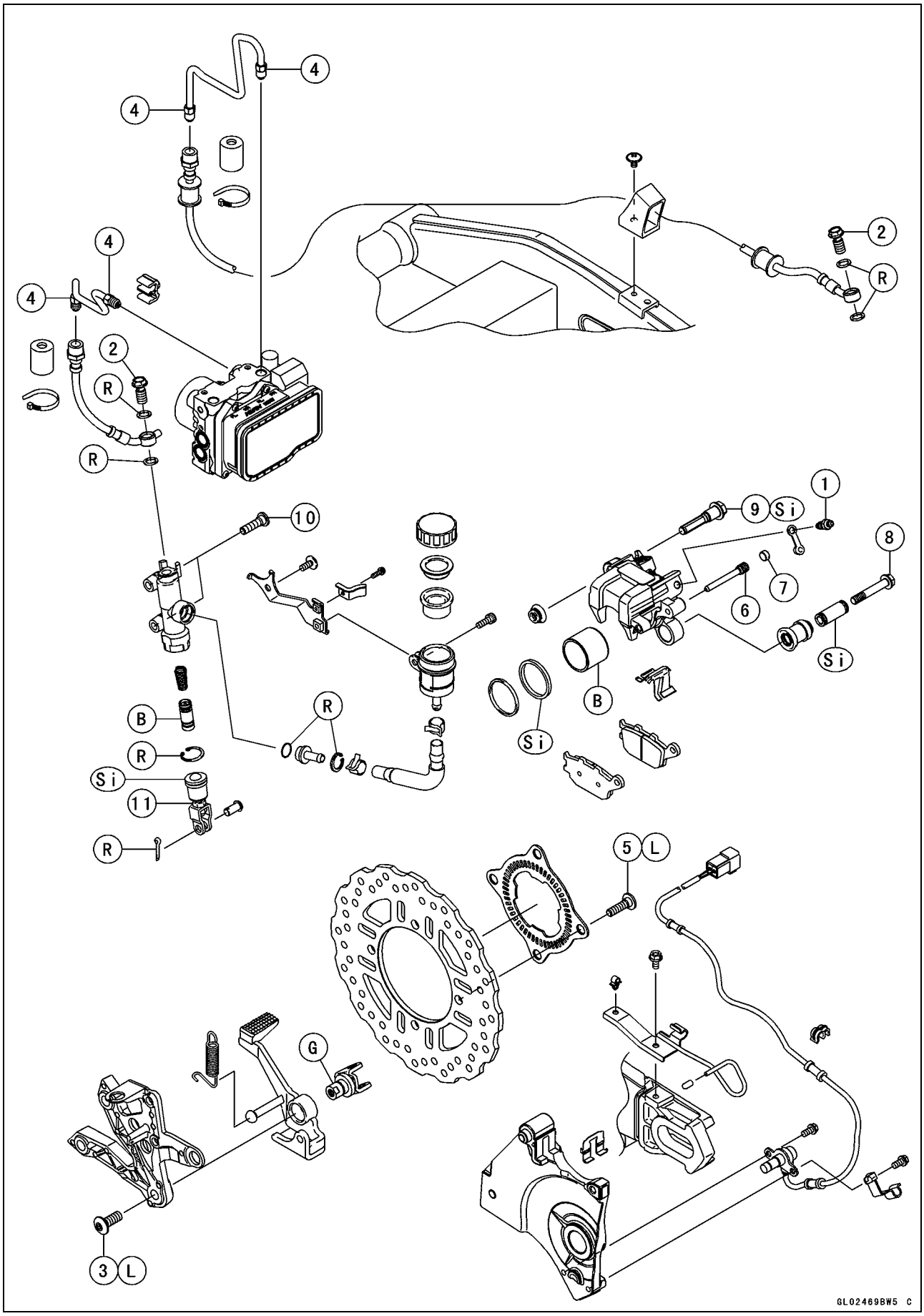

Exploded View

No.	Fastener	Torque			Remarks
		N·m	kgf·m	ft·lb	
1	Bleed Valve	7.8	0.80	69 in·lb	
2	Brake Hose Banjo Bolts	25	2.5	18	
3	Brake Pedal Bolt	34	3.5	25	L
4	Brake Pipe Joint Nuts	18	1.8	13	
5	Rear Brake Disc Mounting Bolts	27	2.8	20	L
6	Rear Brake Pad Pin	17.2	1.8	13	
7	Rear Brake Pad Pin Plug	2.5	0.25	22 in·lb	
8	Rear Caliper Mounting Bolt	22	2.2	16	
9	Rear Caliper Pin Bolt	27	2.8	20	Si
10	Rear Master Cylinder Mounting Bolts	25	2.5	18	
11	Rear Master Cylinder Push Rod Locknut	17.2	1.8	13	

B: Apply brake fluid.
G: Apply grease.
L: Apply a non-permanent locking agent.
R: Replacement Parts
Si: Apply silicone grease (ex. PBC grease).

Specifications

Item	Standard	Service Limit
Brake Lever, Brake Pedal		
Brake Lever Position	6-way adjustable (to suit rider)	– – –
Brake Lever Free Play	Non-adjustable	– – –
Pedal Free Play	Non-adjustable	– – –
Pedal Position	About 50 mm (1.97 in.) below footpeg top	– – –
Brake Pads		
Lining Thickness:		
Front	4.0 mm (0.16 in.)	1 mm (0.04 in.)
Rear	5.0 mm (0.20 in.)	1 mm (0.04 in.)
Brake Discs		
Thickness:		
Front	5.8 ~ 6.2 mm (0.23 ~ 0.24 in.)	5.5 mm (0.22 in.)
Rear	5.8 ~ 6.2 mm (0.23 ~ 0.24 in.)	5.5 mm (0.22 in.)
Runout	TIR 0.15 mm (0.006 in.) or less	TIR 0.3 mm (0.01 in.)
Brake Fluid		
Grade	DOT4	– – –
ABS (Equipped Models)		
Wheel Rotation Sensor Air Gap:		
Front	0.7 ~ 0.9 mm (0.028 ~ 0.035 in.)	– – –
Rear	0.7 ~ 0.9 mm (0.028 ~ 0.035 in.)	– – –

Special Tools

Jack:
57001-1238

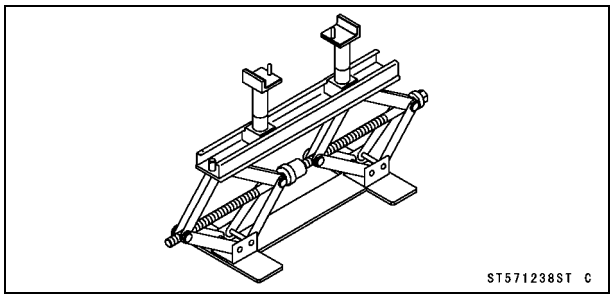

Jack Attachment:
57001-1608

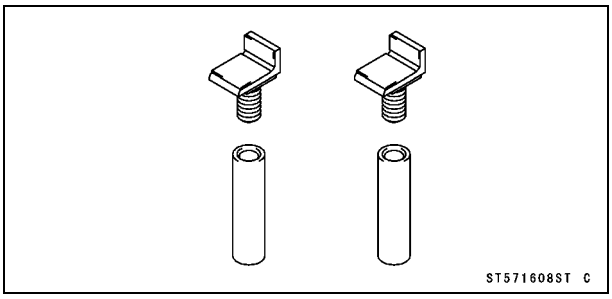

Hand Tester:
57001-1394

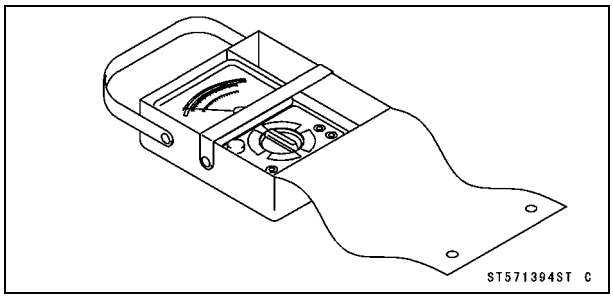

Brake Lever, Brake Pedal

Brake Lever Position Adjustment

The brake lever adjuster has 6 positions so that the brake lever position can be adjusted to suit the operator's hand.

- Push the lever forward and turn the adjuster [A] to align the number with the arrow mark [B] on the lever holder.

○The distance from the grip to the lever is minimum at number 6 and maximum at number 1.

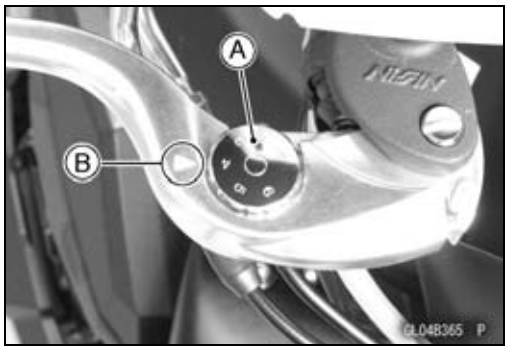

Brake Pedal Position Inspection

- Check that the brake pedal [A] is in the correct position.
  Footpeg [B]

Pedal Position

Standard: About 50 mm (1.97 in.) [C] below top of footpeg

★If it is incorrect, adjust the brake pedal position.

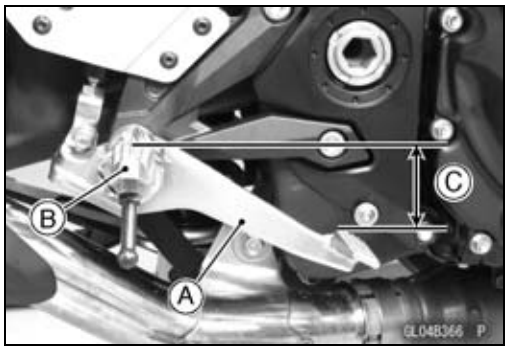

Brake Pedal Position Adjustment

NOTE

○*Usually it is not necessary to adjust the pedal position, but always adjust it when the push rod locknut has been loosened.*

- Loosen the locknut [A] and turn the push rod with the hex head [B] to achieve the correct pedal position.

★If the length [C] shown is **70 ±1 mm (2.76 ±0.04 in.)**, the pedal position will be within the standard range.

- Tighten:

Torque - Rear Master Cylinder Push Rod Locknut: 17.2 N·m (1.8 kgf·m, 13 ft·lb)

- Check the brake light switch operation (see Brake Light Switch Operation Inspection in the Periodic Maintenance chapter).

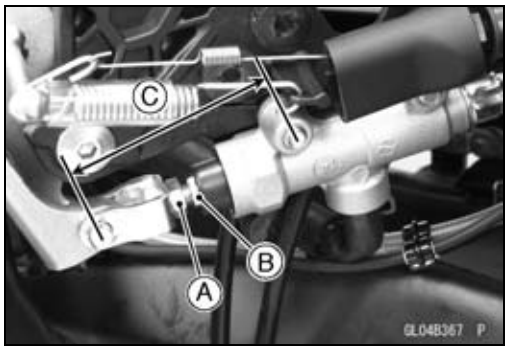

Brake Pedal Removal

- Remove:
  Guard Bracket Bolts and Nuts [A]
  Guard Bracket [B]
  Front Footpeg Bracket Bolts [C]

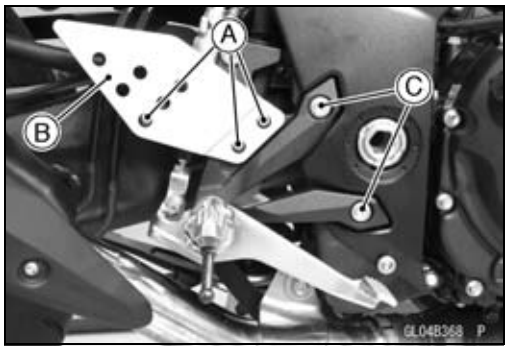

Brake Lever, Brake Pedal

- Remove:
  Cotter Pin [A]
  Joint Pin [B]
  Rear Brake Light Switch Spring [C]
  Return Spring [D]
  Brake Pedal Bolt [E]
  Brake Pedal [F]

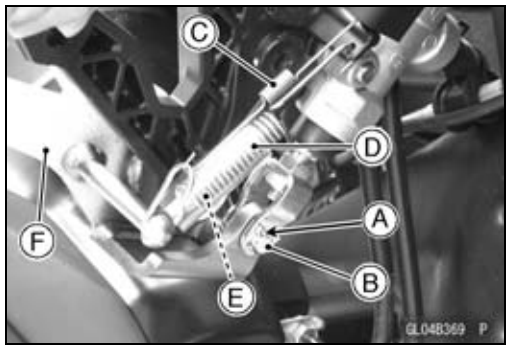

Brake Pedal Installation

- Apply grease to the footpeg pivot shaft [A].
- Install:
  Bushing [B]
  Brake Pedal [C]
- Apply a non-permanent locking agent to the threads of the brake pedal bolt [D], and tighten it.

  Torque - Brake Pedal Bolt: 34 N·m (3.5 kgf·m, 25 ft·lb)

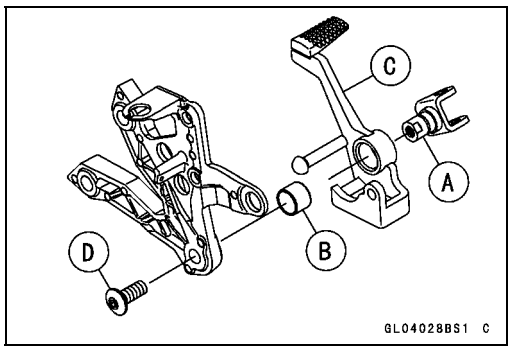

- Hook the lower end of the rear brake light switch spring [A] on the return spring lower end.
- Hook the upper end of the return spring [B] on the footpeg bracket hook.

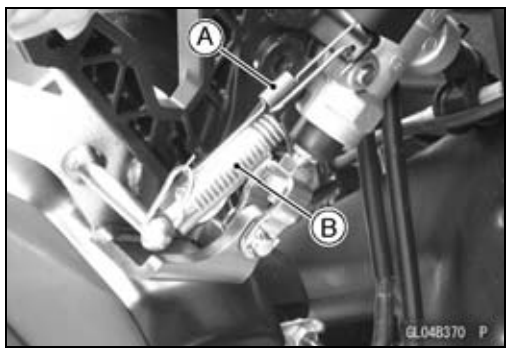

- Replace the cotter pin with a new one.
- Insert the cotter pin [A] and bend the pin ends [B].

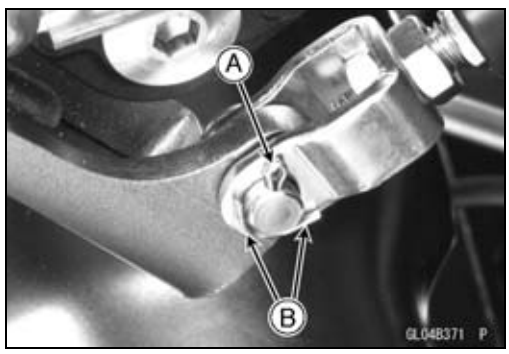

- Install the front footpeg bracket.
- Tighten:

  Torque - Front Footpeg Bracket Bolts: 25 N·m (2.5 kgf·m, 18 ft·lb)

- Install:
  Guard Bracket
  Guard Bracket Bolts
- Check the brake pedal position (see Brake Pedal Position Inspection).

Calipers

Front Caliper Removal

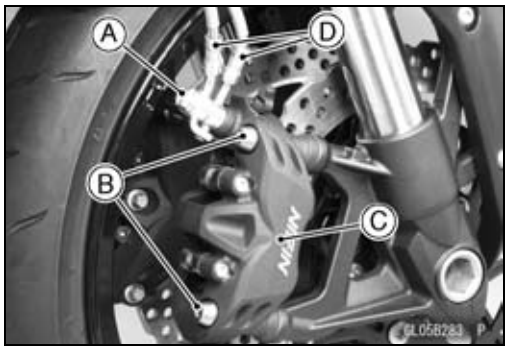

- Loosen the banjo bolt [A] at the brake hose lower end, and tighten it loosely.
- Unscrew the caliper mounting bolts [B], and detach the caliper [C] from the disc.

NOTICE

Do not loosen the caliper assembly bolts. Take out only the caliper mounting bolts for caliper removal. Loosening the caliper assembly bolts will cause brake fluid leakage.

- Unscrew the banjo bolt and remove the brake hoses [D] from the caliper (see Brake Hose Removal/Installation).

NOTICE

Immediately wash away any brake fluid that spills.

NOTE

○*If the caliper is to be disassembled after removal and if compressed air is not available, disassemble the caliper before the brake hose is removed (see Front Caliper Disassembly).*

Rear Caliper Removal

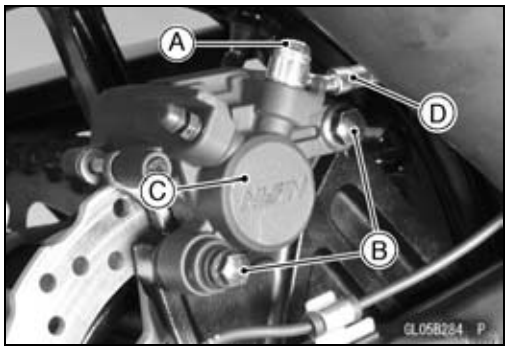

- Loosen the banjo bolt [A] at the brake hose lower end, and tighten it loosely.
- Unscrew the bolts [B], and detach the caliper [C] from the disc.
- Unscrew the banjo bolt and remove the brake hose [D] from the caliper (see Brake Hose Removal/Installation).

NOTICE

Immediately wash away any brake fluid that spills.

NOTE

○*If the caliper is to be disassembled after removal and if compressed air is not available, disassemble the caliper before the brake hose is removed (see Rear Caliper Disassembly).*

Caliper Installation

- Install the caliper and brake hose lower end.

○Replace the washers on each side of hose fitting with new ones.

Calipers

Rear Caliper

- Install:
  Rubber Boot [A]
  Guide [B]

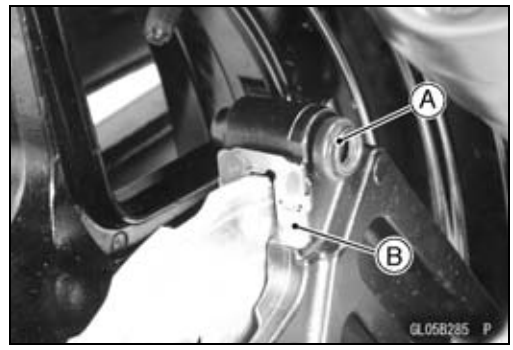

- Fit the rear brake pads [A] to the guide [B].

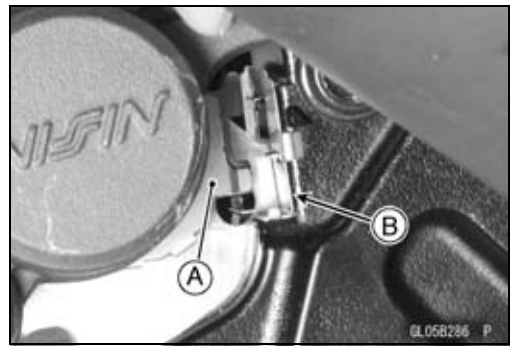

- Apply silicone grease to the rear caliper pin bolt.
- Tighten:

Torque - Caliper Mounting Bolts:
Front: 34 N·m (3.5 kgf·m, 25 ft·lb)
Rear: 22 N·m (2.2 kgf·m, 16 ft·lb)
Rear Caliper Pin Bolt: 27 N·m (2.8 kgf·m, 20 ft·lb)
Brake Hose Banjo Bolts: 25 N·m (2.5 kgf·m, 18 ft·lb)

- Check the fluid level in the brake reservoirs.
- Bleed the brake line (see Brake Line Bleeding).
- Check the brake for good braking power, no brake drag, and no fluid leakage.

⚠ WARNING

After servicing, it takes several applications of the brake lever or pedal before the brake pads contact the disc, which could result in increased stopping distance and cause an accident resulting in injury or death. Do not attempt to ride the motorcycle until a firm brake lever or pedal is obtained by pumping the lever or pedal until the pads are against the disc.

Front Caliper Disassembly

- Refer to the Caliper Rubber Parts Replacement in the Periodic Maintenance chapter.

Front Caliper Assembly

- Refer to the Caliper Rubber Parts Replacement in the Periodic Maintenance chapter.

Rear Caliper Disassembly

- Refer to the Caliper Rubber Parts Replacement in the Periodic Maintenance chapter.

Calipers

Rear Caliper Assembly

- Refer to the Caliper Rubber Parts Replacement in the Periodic Maintenance chapter.

Caliper Fluid Seal Damage Inspection

The fluid seal (piston seal) [A] is placed around the piston to maintain clearance between the pad and the disc. If the seal is in a poor condition, it could lead the pad to wear excessively or the brake to drag, which may cause the temperature of the discs or the brake fluid to increase.

- Replace the fluid seal if it exhibits any of the conditions listed below.

○Brake fluid leakage around the pad.
○Brakes overheat.
○Considerable difference in inner and outer pad wear.
○Seal and piston are stuck together.

★If the fluid seal is replaced, replace the dust seal [B] as well. Also, replace all seals every other time the pads are changed.

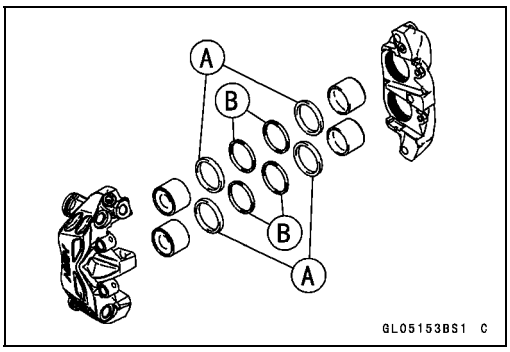

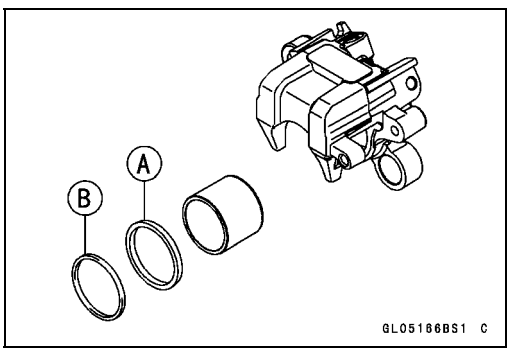

Caliper Dust Seal Damage Inspection

- Check that the dust seals [A] are not cracked, worn, swollen, or otherwise damaged.

★If they show any damage, replace the dust seals with new ones.

Pistons [B]
Fluid Seals [C]

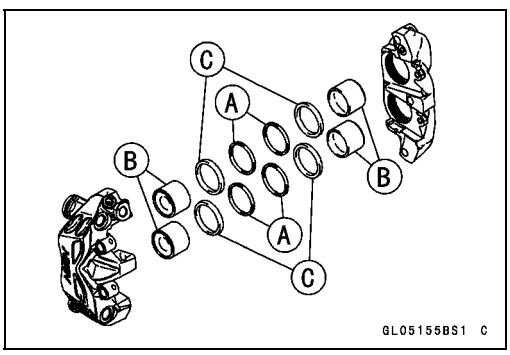

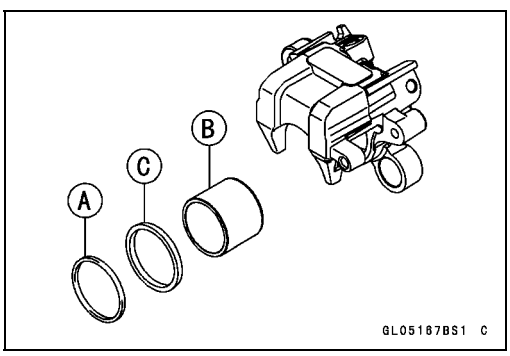

Calipers

Caliper Piston and Cylinder Damage

- Visually inspect the pistons [A] and cylinder surfaces [B].

★Replace the caliper if the cylinder and piston are badly scores or rusty.

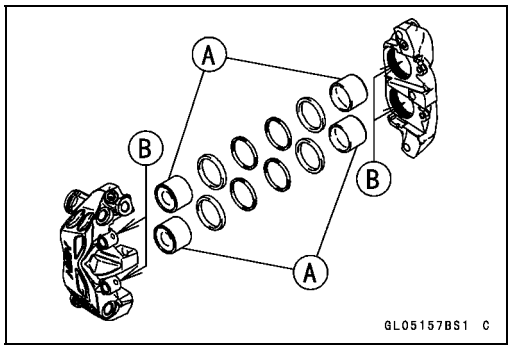

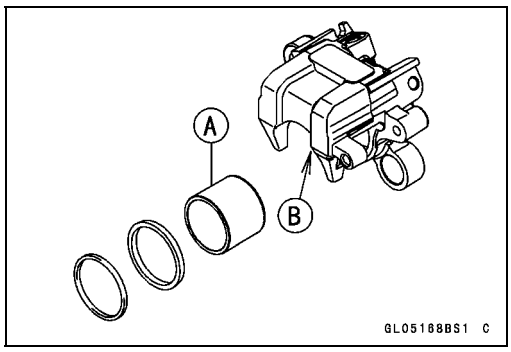

Brake Pads

Front Brake Pad Removal

- Remove:
  Pad Pin [A]
  Pad Spring [B]
  Brake Pads [C]

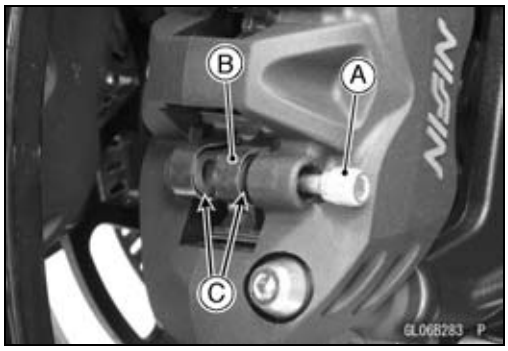

Front Brake Pad Installation

- Push the caliper pistons in by hand as far as they will go.
- Install the outside pad [A] and insert the pad pin [B] as shown in the figure.

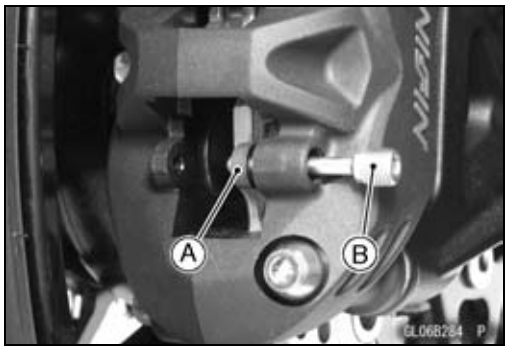

- Set:
  Inside Pad [A]
  Pad Spring [B]

○Pushing the pin holder [C] to hole of the pad and insert the pad pin.

Torque - Front Brake Pad Pins: 17.2 N·m (1.8 kgf·m, 13 ft·lb)

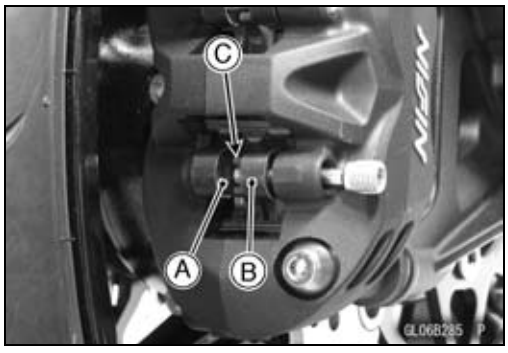

⚠ WARNING

After servicing, it takes several applications of the brake lever before the brake pads contact the disc, which could result in increased stopping distance and cause an accident resulting in injury or death. Do not attempt to ride the motorcycle until a firm brake lever is obtained by pumping the lever until the pads are against the disc.

Rear Brake Pad Removal

- Unscrew the pad pin plug [A].

Brake Pads

- Loosen the pad pin [A].
- Unscrew the bolt [B].

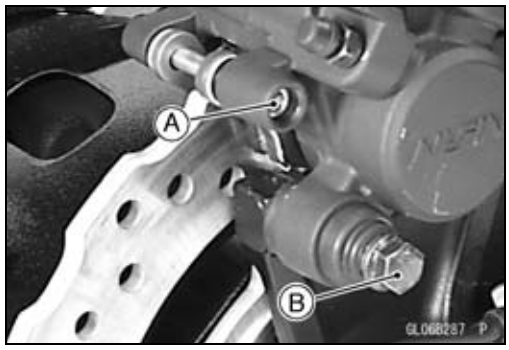

- Remove:
  Pad Pin [A]
  Brake Pads [B]

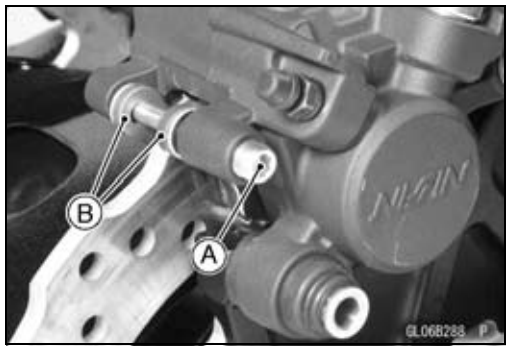

Rear Brake Pad Installation

- Push the caliper piston in by hand as far as they will go.
- Install the outside pad [A] and insert the pad pin [B] as shown in the figure.

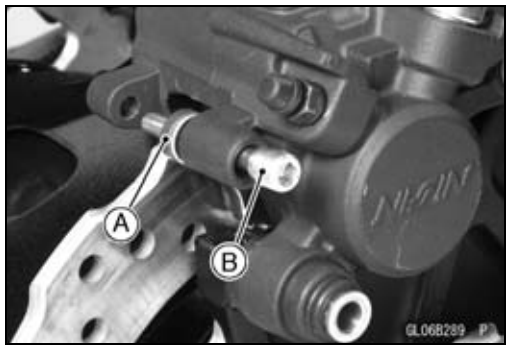

- Set:
  Inside Pad [A]
  Pad Pin [B]
- Install the caliper (see Caliper Installation).
- Tighten the pad pin and plug.

Torque - Rear Brake Pad Pin: 17.2 N·m (1.8 kgf·m, 13 ft·lb)
Rear Brake Pad Pin Plug: 2.5 N·m (0.25 kgf·m, 22 in·lb)

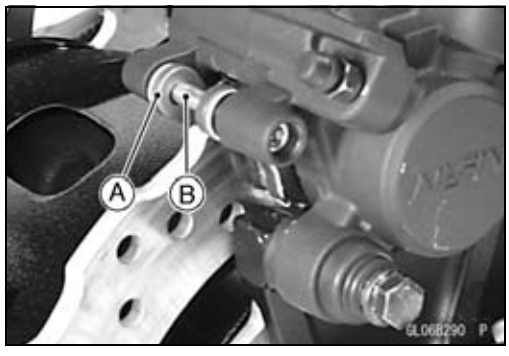

⚠ WARNING

After servicing, it takes several applications of the brake pedal before the brake pads contact the disc, which could result in increased stopping distance and cause an accident resulting in injury or death. Do not attempt to ride the motorcycle until a firm brake pedal is obtained by pumping the pedal until the pads are against the disc.

Brake Pad Wear Inspection

- Refer to the Brake Pad Wear Inspection in the Periodic Maintenance chapter.

Master Cylinder

Front Master Cylinder Removal

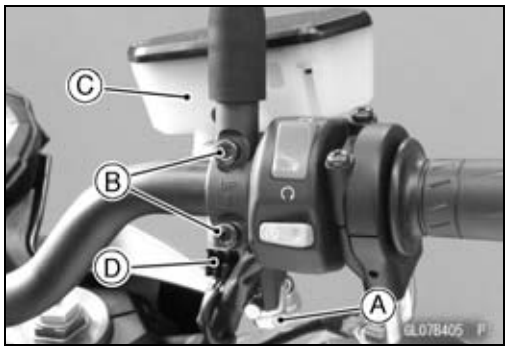

- Remove the banjo bolt [A] to disconnect the brake hose from the master cylinder (see Brake Hose Removal/Installation).
- Unscrew the clamp bolts [B], and take off the master cylinder [C] as an assembly with the reservoir, brake lever, and brake switch installed.
- Disconnect the front brake light switch connector [D].

NOTICE
Immediately wash away any brake fluid that spills.

Front Master Cylinder Installation

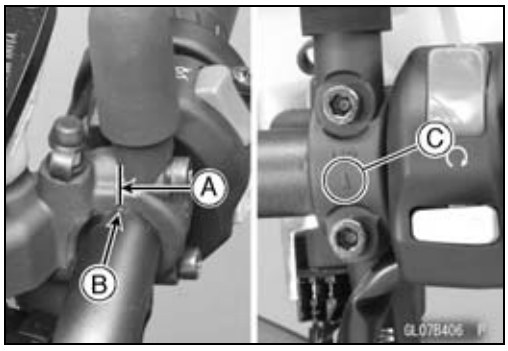

- Set the front master cylinder to match its mating surface [A] to the punch mark [B] of the handlebar.
- The master cylinder clamp must be installed with the arrow mark [C] upward.
- Tighten the upper clamp bolt first, and then the lower clamp bolt.

Torque - Front Master Cylinder Clamp Bolts: 11 N·m (1.1 kgf·m, 97 in·lb)

- Replace the washers that are on each side of the hose fitting with new ones.
- Tighten:

Torque - Brake Hose Banjo Bolts: 25 N·m (2.5 kgf·m, 18 ft·lb)

- Bleed the brake line (see Brake Line Bleeding).
- Check the brake for good braking power, no brake drag, and no fluid leakage.

Rear Master Cylinder Removal

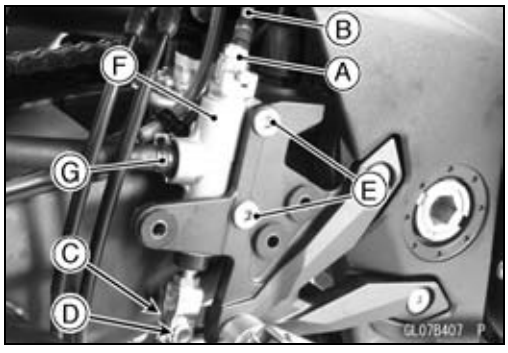

- Remove:
  Guard Bracket (see Brake Pedal Removal)
  Brake Hose Banjo Bolt [A]
  Brake Hose [B]
  Cotter Pin [C]
  Joint Pin [D]
  Bolts [E]
  Rear Master Cylinder [F]
- Slide out the clamp [G].
- Pull off the reservoir hose lower end, and drain the brake fluid into a container.

Rear Master Cylinder Installation

- Replace the cotter pin with a new one.
- Replace the washers that are on each side of hose fitting with new ones.
- Tighten:

Torque - Rear Master Cylinder Mounting Bolts: 25 N·m (2.5 kgf·m, 18 ft·lb)
Brake Hose Banjo Bolts: 25 N·m (2.5 kgf·m, 18 ft·lb)

- Bleed the brake line (see Brake Line Bleeding).
- Check the brake for good braking power, no brake drag, and no fluid leakage.

Master Cylinder

Front Master Cylinder Disassembly

- Refer to the Master Cylinder Rubber Parts Replacement in the Periodic Maintenance chapter.

Rear Master Cylinder Disassembly

- Refer to the Master Cylinder Rubber Parts Replacement in the Periodic Maintenance chapter.

Master Cylinder Assembly

- Refer to the Master Cylinder Rubber Parts Replacement in the Periodic Maintenance chapter.

Master Cylinder Inspection (Visual Inspection)

- Remove the master cylinders (see Front/Rear Master Cylinder Removal).
- Disassemble the front and rear master cylinders (see Master Cylinder Rubber Parts Replacement in the Periodic Maintenance chapter).
- Check that there are no scratches, rust or pitting on the inner wall [A] of each master cylinder and on the outside of each piston [B].

★If a master cylinder or piston shows any damage, replace them.

- Inspect the primary cup [C] and secondary cup [D].

★If a cup is worn, damaged softened (rotted), or swollen, the piston assembly should be replaced to renew the cups.

★If fluid leakage is noted at the brake lever, the piston assembly should be replaced to renew the cups.

- Check the dust covers [E] for damage.

★If they are damaged, replace them.

- Check the piston return springs [F] for any damage.

★If the springs are damaged, replace them.

- Check that relief port [G] and supply port [H] are not plugged.

★If the relief port becomes plugged, the brake pads will drag on the disc. Blow the ports clean with compressed air.

Front Master Cylinder [I]
Rear Master Cylinder [J]

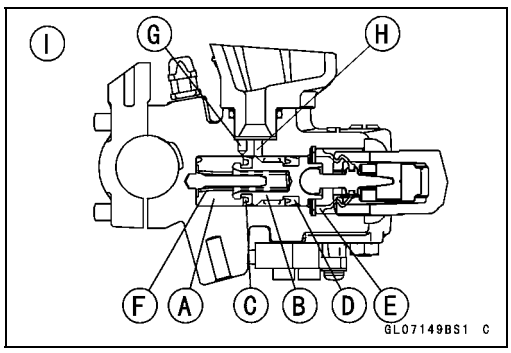

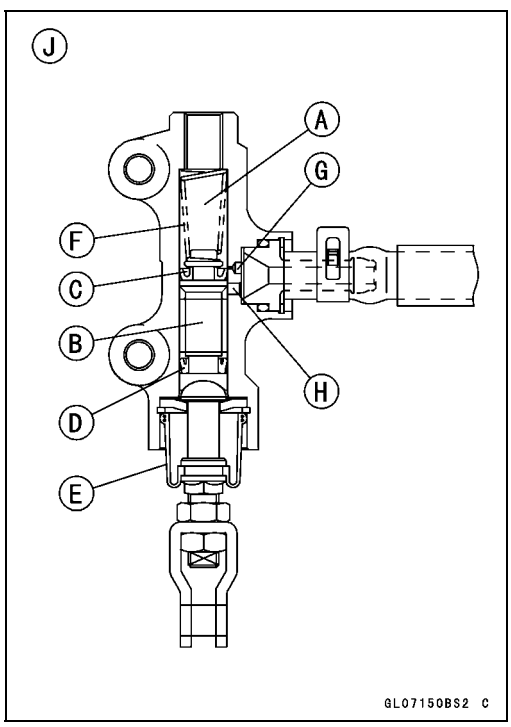

Brake Disc

Brake Disc Removal

- Remove the wheels (see Front/Rear Wheel Removal in the Wheels/Tires chapter).
- Unscrew the mounting bolts, and take off the disc.

○Remove the sensor rotor (ABS equipped models).

- Remove the gaskets.

Brake Disc Installation

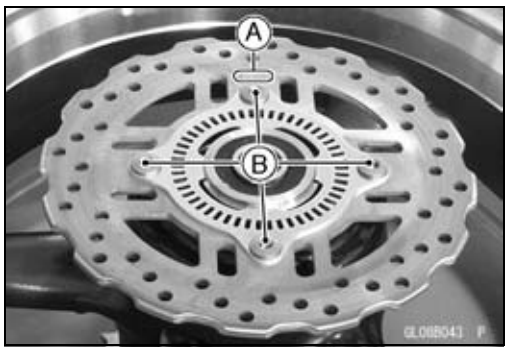

- Replace the gaskets with new ones.
- Install the brake disc on the wheel so that the marked side [A] faces out.

○Install the sensor rotor on the brake disc so that the marked side faces out (ABS equipped models).

- Apply a non-permanent locking agent to the threads of the front and rear brake disc mounting bolts [B], and tighten them.

Torque - Brake Disc Mounting Bolts: 27 N·m (2.8 kgf·m, 20 ft·lb)

Brake Disc Wear Inspection

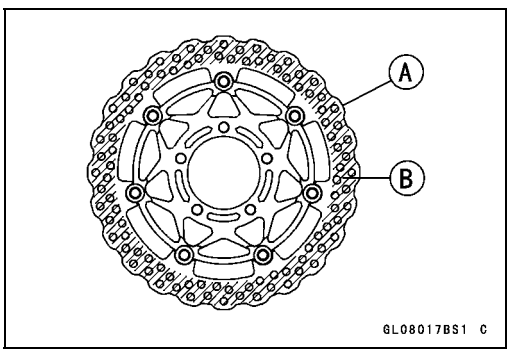

- Measure the thickness of each disc [A] at the point where it has worn the most.

★If the disc has worn past the service limit, replace it.
Measuring Area [B]

Brake Discs Thickness

Standard:

Front	**5.8 ~ 6.2 mm (0.23 ~ 0.24 in.)**
Rear	**5.8 ~ 6.2 mm (0.23 ~ 0.24 in.)**

Service Limit:

Front	**5.5 mm (0.22 in.)**
Rear	**5.5 mm (0.22 in.)**

Brake Disc Warp Inspection

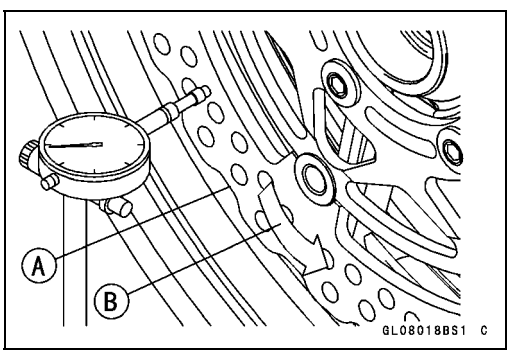

- Raise the front/rear wheel off the ground.

Special Tools - Jack: 57001-1238
Jack Attachment: 57001-1608

○For front disc inspection, turn the handlebar fully to one side.

- Set up a dial gauge against the disc [A] as shown in the figure and measure disc runout, while turning [B] the wheel by hand.

★If runout exceeds the service limit, replace the disc.

Disc Runout

Standard:	**TIR 0.15 mm (0.006 in.) or less**
Service Limit:	**TIR 0.3 mm (0.01 in.)**

Brake Fluid

Brake Fluid Level Inspection

- Refer to the Brake Fluid Level Inspection in the Periodic Maintenance chapter.

Brake Fluid Change

- Refer to the Brake Fluid Change in the Periodic Maintenance chapter.

Brake Line Bleeding

The brake fluid has a very low compression coefficient so that almost all the movement of the brake lever or pedal is transmitted directly to the caliper for braking action. Air, however, is easily compressed. When air enters the brake lines, brake lever or pedal movement will be partially used in compressing the air. This will make the lever or pedal feel spongy, and there will be a loss in braking power.

⚠ WARNING

Air in the brake lines diminish braking performance and can cause an accident resulting in injury or death. If the brake lever or pedal has a soft or "spongy" feeling mushy when it is applied, there might be air in the brake lines or the brake may be defective. Do not operate the vehicle and service the brake system immediately.

NOTE

○*The procedure to bleed the front brake line is as follows. Bleeding the rear brake line is the same as for the front brake.*

- Remove:
  Screw [A]
  Front Brake Reservoir Cap [B]
  Diaphragm Plate
  Diaphragm
- Fill the reservoir with fresh brake fluid to the upper level line in the reservoir.
- Slowly pump the brake lever several times until no air bubbles can be seen rising up through the fluid from the holes at the bottom of the reservoir.

○Bleed the air completely from the master cylinder by this operation.

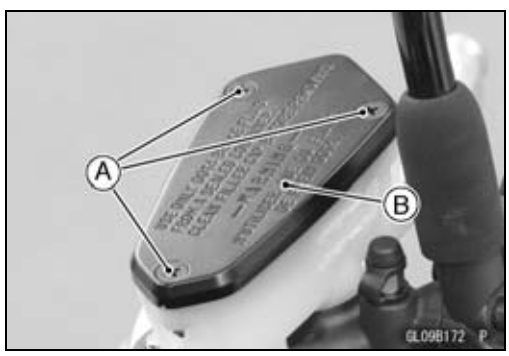

- Remove the rubber cap from the bleed valve on the front master cylinder.
- Attach a clear plastic hose [A] to the bleed valve, and run the other end of the hose into a container.

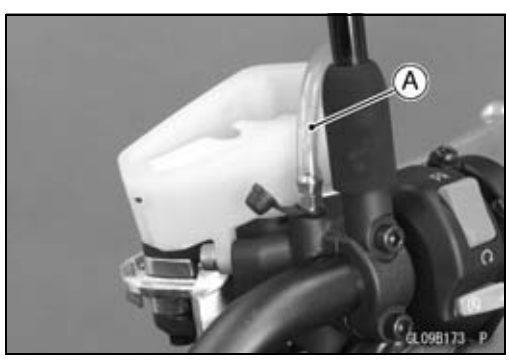

Brake Fluid

- Bleed the brake line and the master cylinder.

○Repeat this operation until no more air can be seen coming out into the plastic hose.

1. Pump the brake lever until it becomes hard, and apply the brake and hold it [A].
2. Quickly open and close [B] the bleed valve while holding the brake applied.
3. Release the brake [C].

NOTE

○*The fluid level must be checked often during the bleeding operation and replenished with fresh brake fluid as necessary. If the fluid in the reservoir runs completely out any time during bleeding, the bleeding operation must be done over again from the beginning since air will have entered the line.*

- Remove the clear plastic hose.
- Tighten the bleed valve, and install the rubber cap.

Torque - Front Master Cylinder Bleed Valve: 5.4 N·m (0.55 kgf·m, 48 in·lb)

- Remove the rubber cap [A] from the bleed valve on the caliper.
- Attach a clear plastic hose [B] to the bleed valve, and run the other end of the hose into a container.

- Bleed the brake line and the caliper.

○Repeat this operation until no more air can be seen coming out into the plastic hose.

1. Pump the brake lever until it becomes hard, and apply the brake and hold it [A].
2. Quickly open and close [B] the bleed valve while holding the brake applied.
3. Release the brake [C].

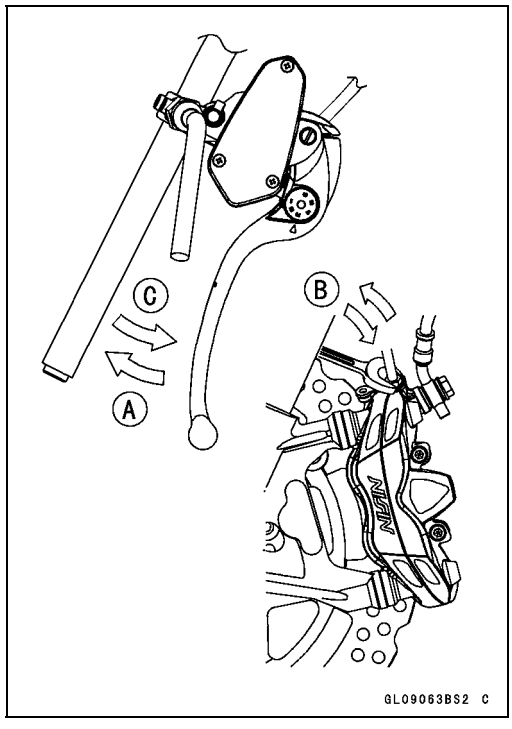

NOTE

○*The fluid level must be checked often during the bleeding operation and replenished with fresh brake fluid as necessary. If the fluid in the reservoir runs completely out any time during bleeding, the bleeding operation must be done over again from the beginning since air will have entered the line.*

○*Tap the brake hose lightly from the caliper to the reservoir for more complete bleeding.*

○*Front Brake: First bleeding the right caliper then repeat the above steps for the left caliper.*

- Remove the clear plastic hose.
- Install:

  Diaphragm
  Diaphragm Plate
  Front Brake Reservoir Cap

Brake Fluid

- Follow the procedure below to install the front/rear brake fluid reservoir cap correctly.

○First, tighten the brake fluid reservoir cap [B] clockwise [C] by hand until slight resistance is felt indicating that the cap is seated on the reservoir body, then tighten the cap an additional 1/6 turn [D] while holding the brake fluid reservoir body [A].

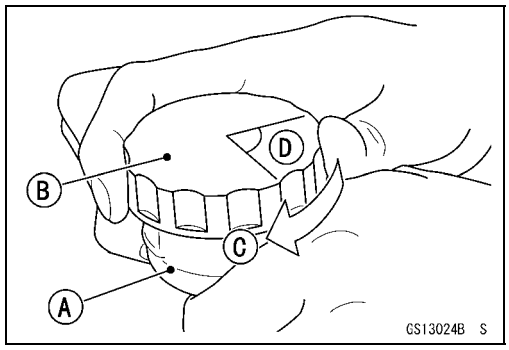

- Install the clamp and screw.
- Tighten:

Torque - Front Brake Reservoir Cap Stopper Screw: 1.2 N·m (0.12 kgf·m, 11 in·lb)

- Tighten the bleed valve, and install the rubber cap.

Torque - Bleed Valves: 7.8 N·m (0.80 kgf·m, 69 in·lb)

- Check the fluid level (see Brake Fluid Level Inspection in the Periodic Maintenance chapter).
- After bleeding is done, check the brake for good braking power, no brake drag, and no fluid leakage.

Brake Fluid

⚠ WARNING

When working with the disc brake, observe the precautions listed below.

1. **Never reuse old brake fluid.**
2. **Do not use fluid from a container that has been left unsealed or that has been open for a long time.**
3. **Do not mix two types and brands of fluid for use in the brake. This lowers the brake fluid boiling point and could cause the brake to be ineffective. It may also cause the rubber brake parts to deteriorate.**
4. **Don't leave the reservoir cap off for any length of time to avoid moisture contamination of the fluid.**
5. **Don't change the fluid in the rain or when a strong wind is blowing.**
6. **Except for the disc pads and disc, use only disc brake fluid, isopropyl alcohol, or ethyl alcohol for cleaning of the brake parts. Do not use any other fluid for cleaning these parts. Gasoline, engine oil, or any other petroleum distillate will cause deterioration of the rubber parts. Oil spilled on any part will be difficult to wash off completely and will eventually deteriorate the rubber used in the disc brake.**
7. **When handling the disc pads or disc, be careful that no disc brake fluid or any oil gets on them. Clean off any fluid or oil that inadvertently gets on the pads or disc with a high-flash point solvent. Do not use one which will leave an oily residue. Replace the pads with new ones if they cannot be cleaned satisfactorily.**
8. **Brake fluid quickly ruins painted surfaces; any spilled fluid should be completely wiped up immediately.**
9. **If any of the brake line fittings or the bleed valve is opened at any time, the AIR MUST BE BLED FROM THE BRAKE LINE.**

Brake Hose

Brake Hose and Pipe Removal/Installation

- Refer to the Brake Hose and Pipe Replacement in the Periodic Maintenance chapter.

Brake Hose and Pipe Inspection

- Refer to the Brake Hose and Pipe Damage and Installation Condition Inspection in the Periodic Maintenance chapter.

Anti-Lock Brake System (Equipped Models)

Parts Location

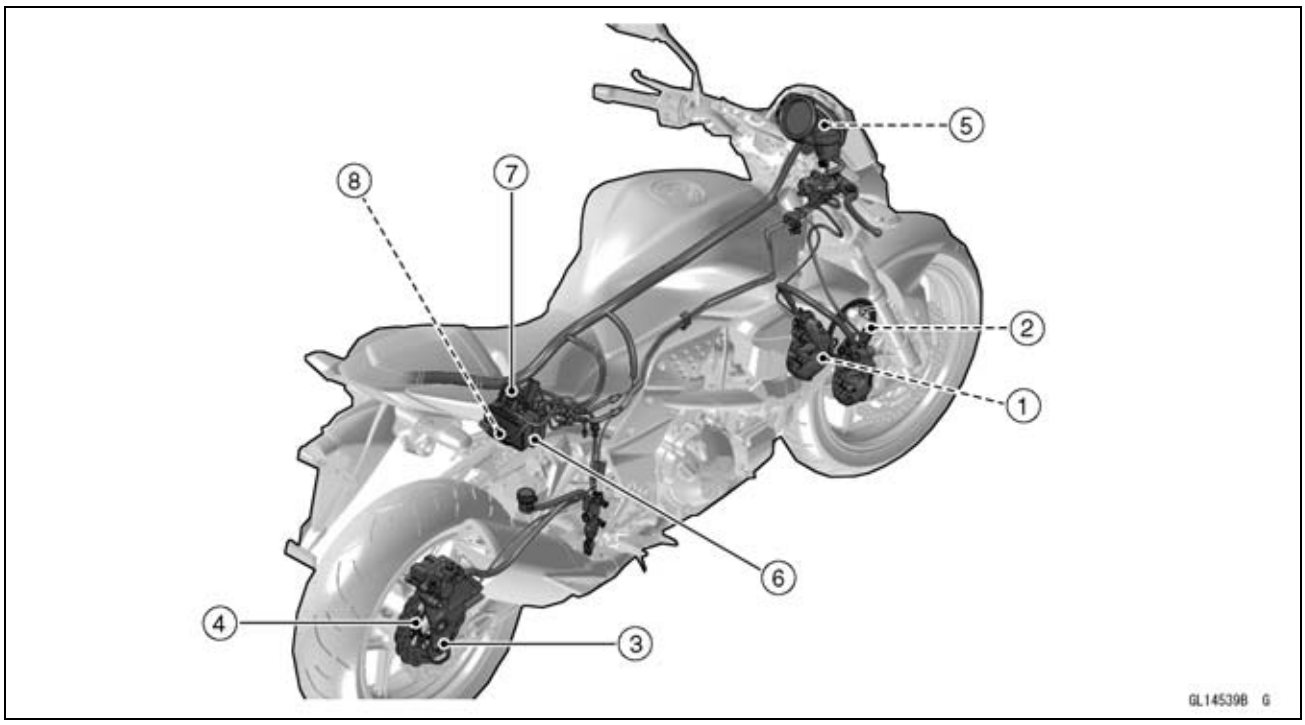

1. Front Wheel Rotation Sensor
2. Front Wheel Rotation Sensor Rotor
3. Rear Wheel Rotation Sensor
4. Rear Wheel Rotation Sensor Rotor
5. ABS Indicator Light (LED)
6. ABS Hydraulic Unit
7. ABS Fuse Box
8. ABS Kawasaki Self-diagnosis System Connector

Anti-Lock Brake System (Equipped Models)

ABS System Wiring Diagram

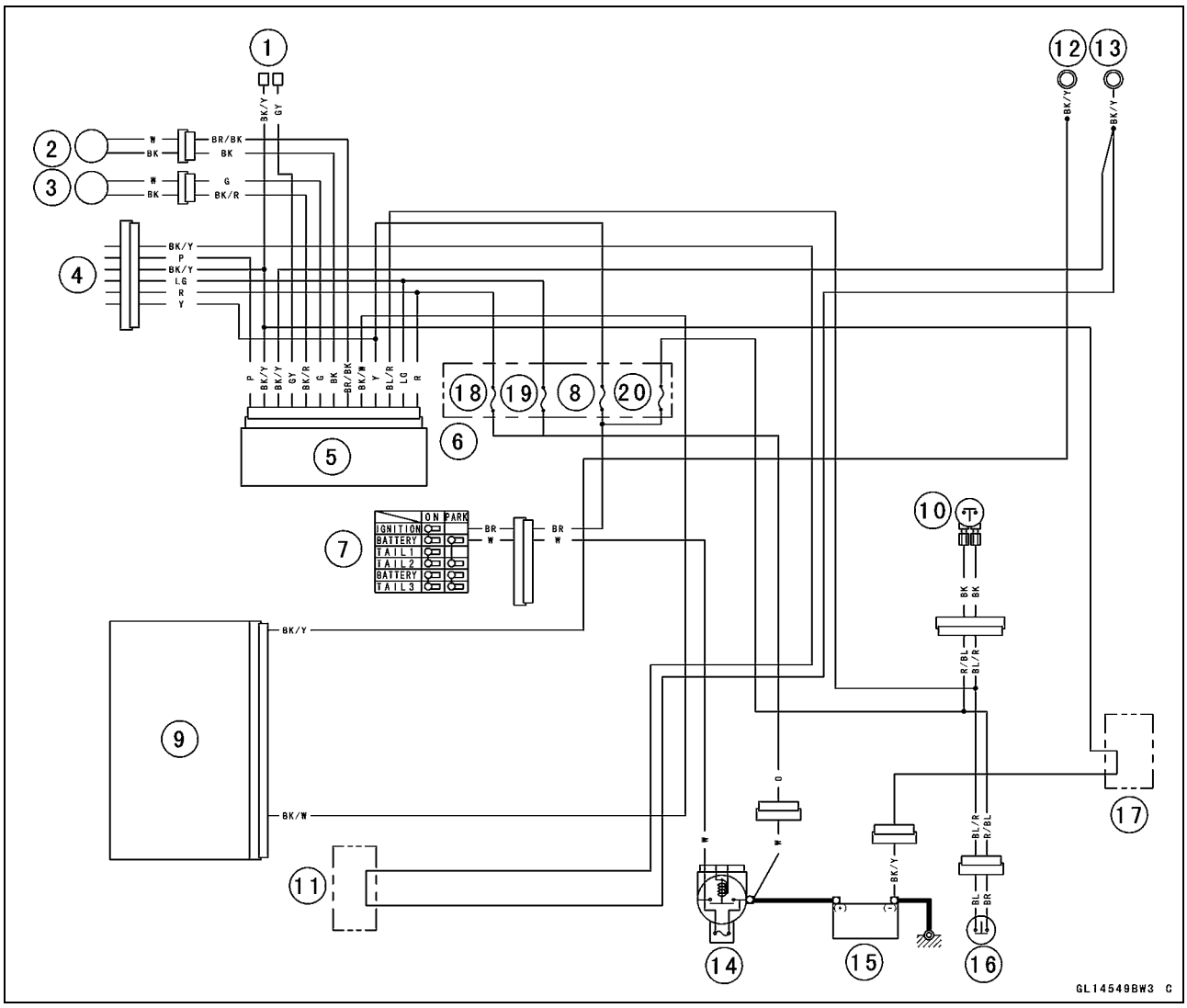

1. ABS Self-diagnosis Terminal
2. Rear Wheel Rotation Sensor
3. Front Wheel Rotation Sensor
4. ABS Kawasaki Self-diagnosis System Connector
5. ABS Hydraulic Unit
6. Fuse Box 1
7. Ignition Switch
8. ABS ECU Fuse 10 A
9. Meter Unit
10. Front Brake Switch
11. Water-proof Joint A
12. Meter Ground
13. Frame Ground
14. Main Fuse 30 A
15. Battery 12 V 8 Ah
16. Rear Brake Switch
17. Water-proof Joint C
18. ABS Motor Relay Fuse 30 A
19. ABS Solenoid Valve Relay Fuse 20 A
20. Taillight Fuse 10A

○Color Codes:

BK: Black	GY: Gray	PU: Purple
BL: Blue	LB: Light Blue	R: Red
BR: Brown	LG: Light Green	V: Violet
CH: Chocolate	O: Orange	W: White
DG: Dark Green	P: Pink	Y: Yellow
G: Green		

Anti-Lock Brake System (Equipped Models)

Terminal Names

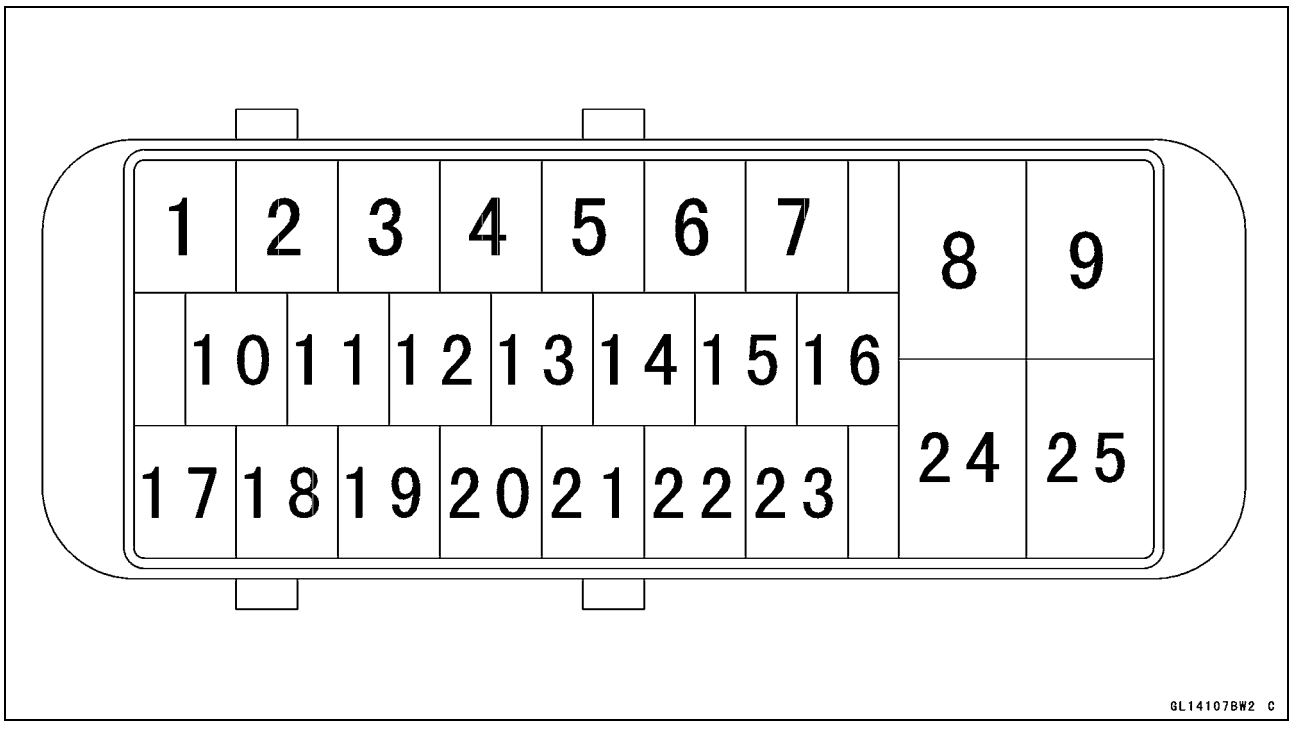

1. Unused
2. Power Supply to Rear Wheel Rotation Sensor
3. Front Wheel Rotation Sensor Signal
4. Front and Rear Brake Light Switch
5. Unused
6. Unused
7. Unused
8. Power Supply to ABS Solenoid Valve Relay
9. Power Supply to ABS Motor Relay
10. ABS Kawasaki Self-diagnosis System Terminal
11. Unused
12. Power Supply to Front Wheel Rotation Sensor
13. ABS Self-diagnosis Terminal
14. Unused
15. Unused
16. Power Supply
17. Unused
18. Rear Wheel Rotation Sensor Signal
19. Unused
20. Unused
21. ABS Indicator Light (LED)
22. Unused
23. Unused
24. Ground
25. Ground to Motor

Anti-Lock Brake System (Equipped Models)

ABS Servicing Precautions

There are a number of important precautions that should be followed servicing the ABS system.

- This ABS system is designed to be used with a 12 V sealed battery as its power source. Do not use any other battery except for a 12 V sealed battery as a power source.
- Do not reverse the battery cable connections. This will damage the ABS hydraulic unit.
- To prevent damage to the ABS parts, do not disconnect the battery cables or any other electrical connections when the ignition switch is ON or while the engine is running.
- Take care not to short the leads that are directly connected to the battery positive (+) terminal to the chassis ground.
- Do not turn the ignition switch ON while any of the ABS electrical connectors are disconnected. The ABS hydraulic unit memorizes service codes.
- Do not spray water on the electrical parts, ABS parts, connectors, leads and wiring.
- If a transceiver is installed on the motorcycle, make sure that the operation of the ABS system is not influenced by electric wave radiated from the antenna. Locate the antenna as far as possible away from the ABS hydraulic unit.
- Whenever the ABS electrical connections are to be disconnected, first turn off the ignition switch.
- The ABS parts should never be struck sharply, as with a hammer, or allowed to fall on a hard surface. Such a shock to the parts can damage them.
- The ABS parts cannot be disassembled. Even if a fault is found, do not try to disassemble and repair the ABS parts, replace it.
- The ABS has many brake lines, pipes, and leads. And the ABS cannot detect problems with the conventional braking system (brake disc wear, unevenly worn brake pad, and other mechanical faults). To prevent trouble, check the brake lines and pipes for correct routing and connection, the wiring for correct routing, and the brakes for proper braking power. Be sure to check for fluid leakage, and bleed the brake line thoroughly.

Anti-Lock Brake System (Equipped Models)

⚠ WARNING

Air in the brake lines diminish braking performance and can cause an accident resulting in injury or death. If any of the brake line fittings, including the ABS hydraulic unit joint nuts, or the bleed valve is opened at any time, the air must be bled completely from the brake line. If the brake lever has a soft or "spongy" feeling mushy when it is applied, there might be air in the brake lines or the brake may be defective. Do not operate the vehicle and service the brake system immediately.

NOTICE

Do not ride the motorcycle with air in the brake line, or the ABS could malfunction.

○The ABS indicator light (LED) [A] may light if the tire pressure is incorrect, a non-recommended tire is installed, or the wheel is deformed. If the indicator light lights, remedy the problem and clear the service code.

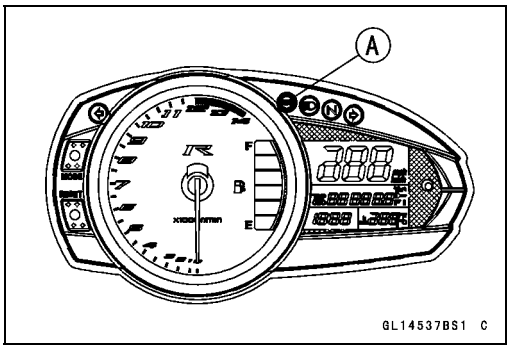

⚠ WARNING

Use of non-recommended tires may cause malfunctioning of ABS and can lead to extended braking distance resulting in an accident causing serious injury or death. Always use recommended standard tires for this motorcycle.

Anti-Lock Brake System (Equipped Models)

○The ABS indicator light (LED) may come on if the engine is run with the motorcycle on its stand and the transmission in gear. If the indicator light comes on, just turn the ignition switch OFF, then clear service code 42, which indicates a “Faulty front wheel rotation sensor”.
○When the ABS operates, the ABS makes noise and the rider feels the reaction force on the brake lever and brake pedal. This is a normal condition. It informs the rider that the ABS is operating normally.
○Service codes detected once by the ABS hydraulic unit will be memorized in the ABS hydraulic unit. Therefore, after maintenance work is finished, be sure to erase the service codes. Do not erase the service codes during troubleshooting. Wait until all the checks and repair work are finished to prevent duplication of previous service codes and unnecessary maintenance work.
○Before delivering the motorcycle to the customer, be sure to erase any service codes which might be stored in the ABS hydraulic unit. Using the self-diagnosis feature, make sure that the ABS indicator light (LED) lights. A fully charged battery is a must for conducting reliable self-diagnosis. Test run the motorcycle at a speed of more than 20 km/h (12 mph) to see that the ABS indicator light (LED) does not come on. Finally, test run the motorcycle at a speed of more than 30 km/h (20 mph) and brake suddenly to see that the motorcycle stops without loss of steering control and the ABS operates normally (The reaction force generated is felt in the brake lever and pedal.). This completes the final inspection.

ABS Troubleshooting Outline

When an abnormality in the system occurs, the ABS indicator light (LED) lights up to alert the rider. In addition, the nature of the fault is stored in the memory of the ABS hydraulic unit and when in the self-diagnosis mode, the service code [A] is indicated by the number of times the ABS indicator light (LED) blinks. The service codes stored in memory are not erased until the mode has been changed to the fault erase mode after the fault has been corrected. Therefore, after correcting the problem, always erase the service codes and then run the self-diagnosis program to confirm normal signal output. When, due to a malfunction, the ABS indicator light (LED) remains lit, get a thorough understanding of the background before starting the repair work. Ask the rider about the conditions [B] under which the problem occurred and try to determine the cause [C]. Do not rely solely on the ABS self-diagnosis function, use common sense; check the brakes for proper braking power, and brake fluid level, search for leaks, etc.

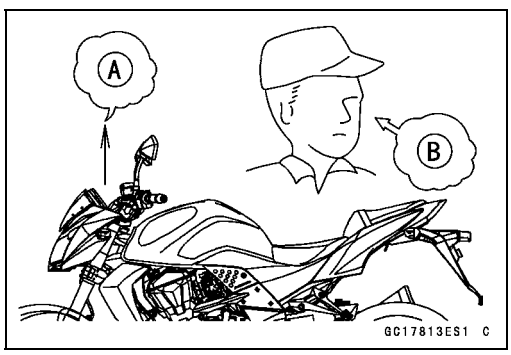

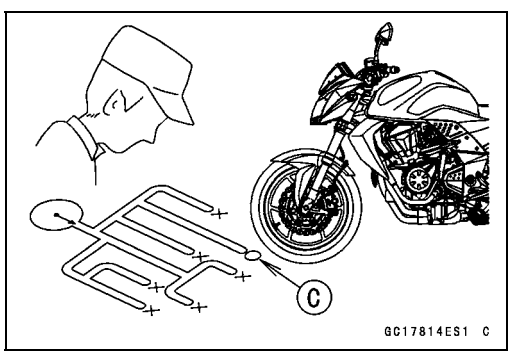

Anti-Lock Brake System (Equipped Models)

Even when the ABS is operating normally, the ABS indicator light (LED) may light up under the conditions listed below. Turn the ignition switch OFF to stop the indicator light. If the motorcycle runs without erasing the service code, the light may light up again.

○After continuous riding on a rough road.
○When the engine is started with the stand raised and the transmission engaged, and the rear wheel turns.
○When accelerating so abruptly that the front wheel leaves the ground.
○When the ABS has been subjected to strong electrical interference.
○When tire pressure is abnormal. Adjust tire pressure.
○When a tire different in size from the standard size is being used. Replace with standard size.
○When the wheel is deformed. Replace the wheel.

Much of the ABS troubleshooting work consists of confirming continuity of the wiring. The ABS parts are assembled and adjusted by the manufacturer, so there is no need to disassemble or repair them. Replace the ABS hydraulic unit.

The basic troubleshooting procedures are listed below.

- Carry out pre-diagnosis inspections as a preliminary inspection.
- Determine the fault using the self-diagnosis function.
- Check wiring and connections from the ABS hydraulic unit connector to the suspected faulty ABS part, using the hand tester.

Special Tool - Hand Tester: 57001-1394

- Visually inspect the wiring for signs of burning or fraying.

★If any wiring is poor, replace the damaged wiring.

- Pull each connector [A] apart and inspect it for corrosion, dirt and damage.

★If the connector is corroded or dirty, clean it carefully. If it is damaged, replace it.

- Check the wiring for continuity.

○Use the wiring diagram to find the ends of the lead which is suspected of being a problem.
○Connect the hand tester between the ends of the leads.

Special Tool - Hand Tester: 57001-1394

○Set the tester to the × 1 Ω range, and read the tester.

★If the tester does not read 0 Ω, the lead is defective. Replace the main harness [B] if necessary.

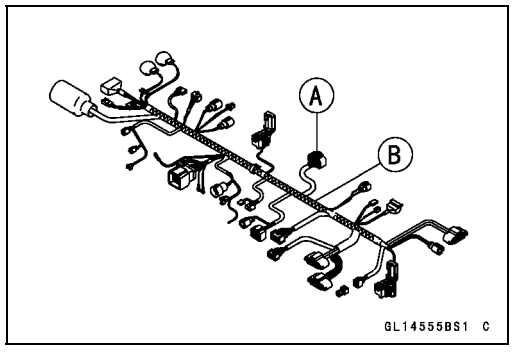

- Narrow down suspicious parts and close in on the faulty ABS part by repeating the continuity tests.

★If no abnormality is found in the wiring or connectors, the ABS parts are the next likely suspects. Check each part one by one.

★If an abnormality is found, replace the affected ABS part.

Anti-Lock Brake System (Equipped Models)

ABS Diagnosis Flow Chart

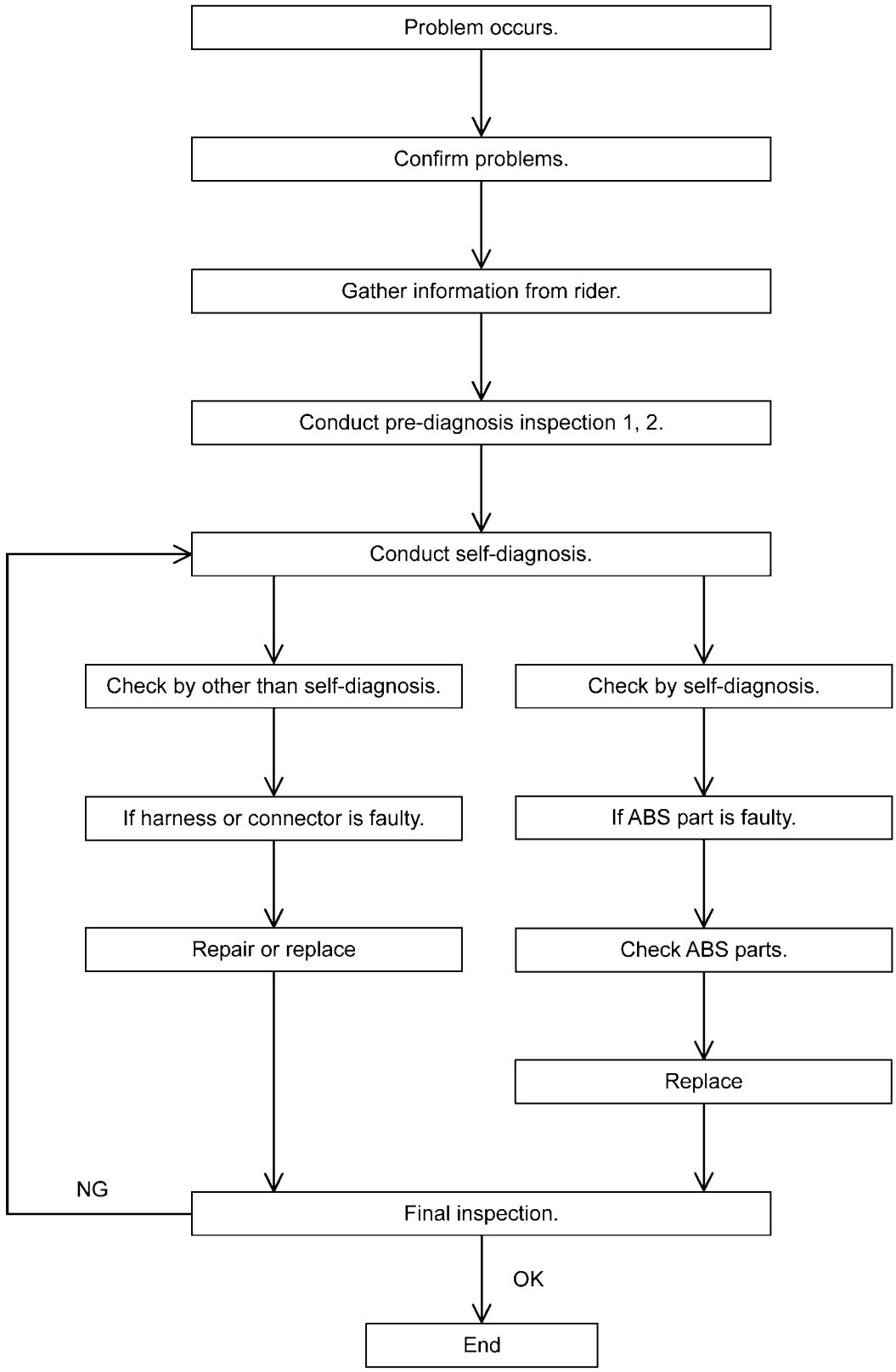

GL14011B F

Anti-Lock Brake System (Equipped Models)

Inquiries to Rider

○Each rider reacts to problems in different ways, so it is important to confirm what kind of condition the rider is dissatisfied with.
○Try to find out exactly what problem occurs under exactly what conditions by asking the rider; knowing this information may help you reproduce the problem in the shop.
○The diagnosis sheet will help prevent you from overlooking any keys, so always use it.

Sample Diagnosis Sheet

Rider name:				Registration No. (license plate No.):			
Year of initial registration:				Model:			
Engine No.:				Frame No.:			
Date problem occurred:				Frequency:			
Weather:				Mileage:			
Phenomenon	☐ Brake lever vibration or noise	☐ Indicator light blinks	☐ Braking distance too long	☐ Abnormal brake lever movement	☐ ABS not working	☐ ABS works but indicator light doesn't light up	☐ ABS operating too frequently
	☐ Pedal vibration or noise	☐ Indicator light remains lit up		☐ Abnormal pedal movement			
Engine conditions at problem	☐ At start-up			☐ After starting		☐ At 5 000 r/min (rpm) or more	
Road conditions	☐ Slippery road ☐ Rough surface ☐ Other			(☐ snow,	☐ gravel,	☐ other)	
Driving conditions	☐ High-speed cornering ☐ Driving 10 km/h (6 mph) or above ☐ Driving below 10 km/h (6 mph) ☐ When stopping ☐ When turning						
Brake application	☐ Gradual ☐ Abrupt						
Other conditions	☐ Large brake lever stroke ☐ Large pedal stroke						

Anti-Lock Brake System (Equipped Models)

Pre-Diagnosis Inspection 1

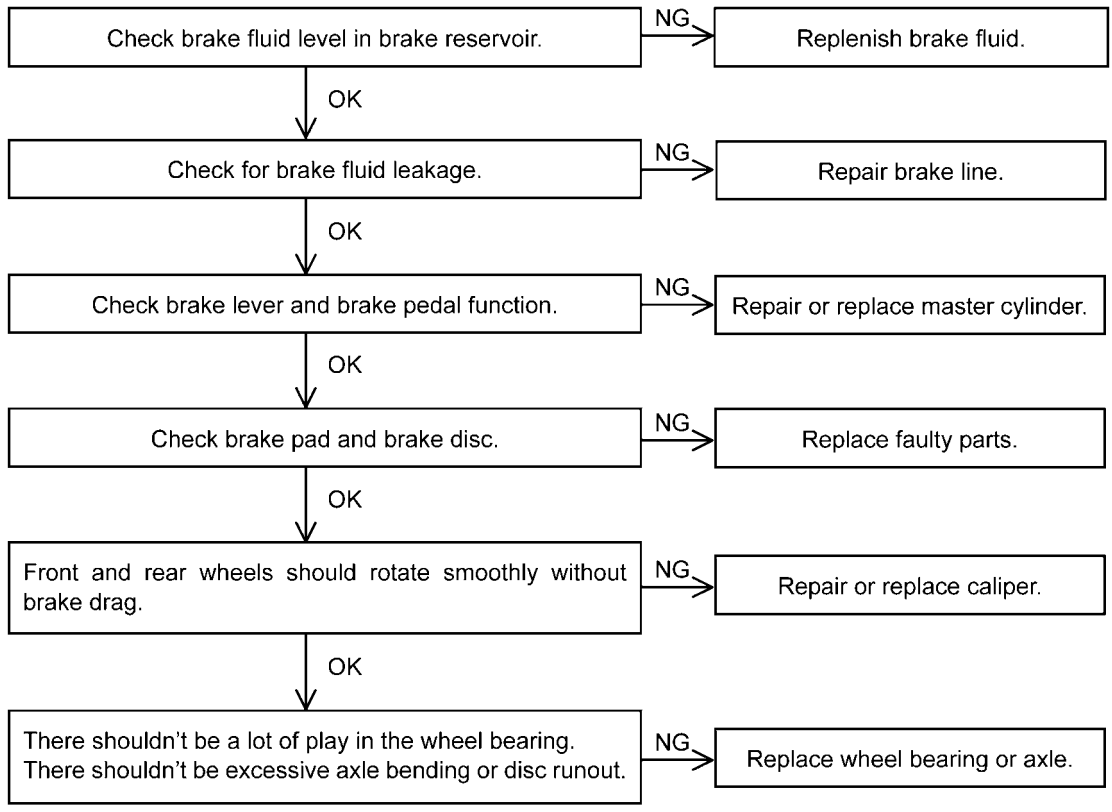

Anti-Lock Brake System (Equipped Models)

Pre-Diagnosis Inspection 2

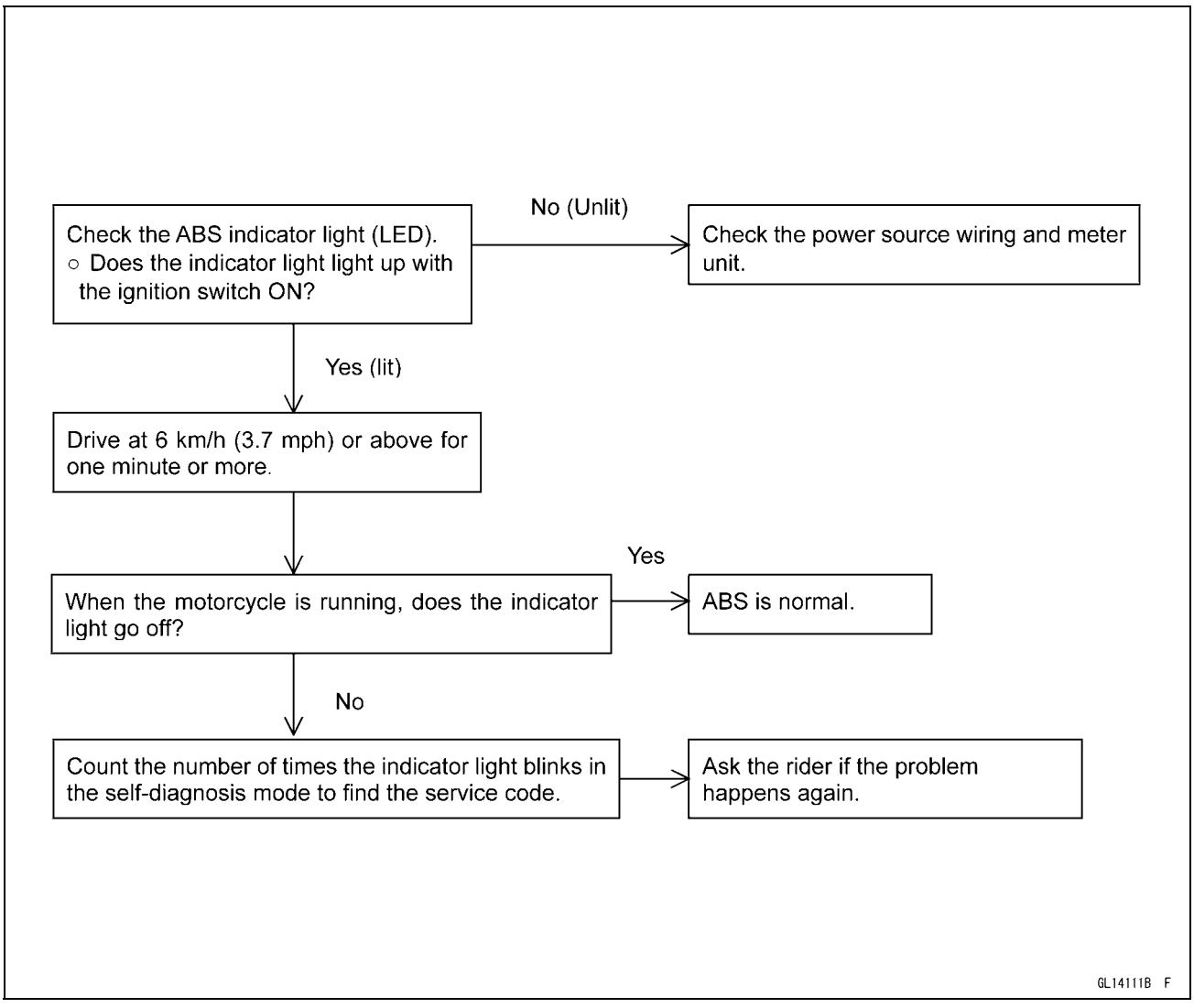

Self-diagnosis Outline

When the indicator light has blinked or come on, the ABS hydraulic unit memorizes and stores the service code for the service person to troubleshoot easily. The service code memory is powered directly by the battery and cannot be canceled by the ignition switch.

The ABS hydraulic unit can memorize up to all service codes (14 codes). Further service codes are memorized after erasing the preceding all service codes (14 codes). If there is no fault, the ABS indicator light (LED) lights, indicating that “The ABS is normal”.

Self-diagnosis Procedures

○When a problem occurs with the ABS system, the ABS indicator light (LED) [A] lights.

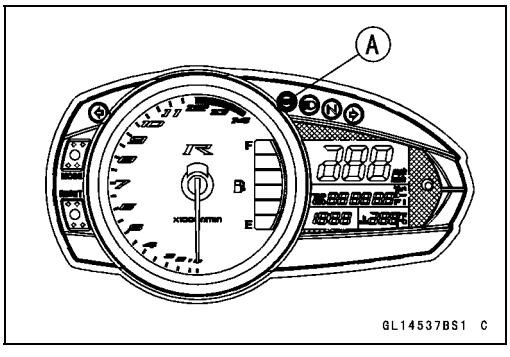

NOTE

○*Use a fully charged battery when conducting self-diagnosis. Otherwise, the light blinks very slowly or doesn’t blink.*

○*The motorcycle is stopped.*

○*Keep the self-diagnosis terminal grounded during self -diagnosis, with an auxiliary lead.*

Anti-Lock Brake System (Equipped Models)

- Remove the seats (see Rear/Front Seat Removal in the Frame chapter).
- Ground the self-diagnosis terminal [A] (Gray) to the ground terminal [B] (Black/Yellow), using a lead.
- Turn on the ignition switch.

○Count the blinks of the light to read the service code. Keep the auxiliary lead ground until you finish reading the service code.

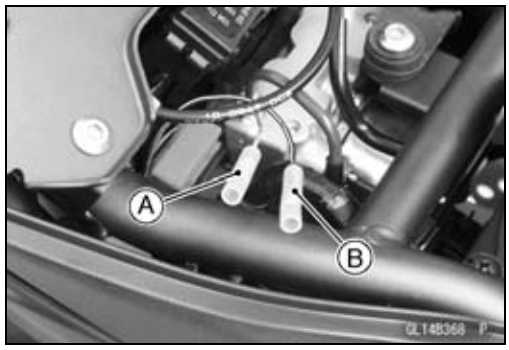

Service Code Clearing Procedures

- Start the service code erase mode with the following procedure.

○The erase mode starts when the ABS self-diagnosis terminal is disconnected from the ground terminal after starting the self-diagnosis mode.

○The service code can be erased by grounding and ungrounding (each time for at least one second) the ABS self-diagnosis terminal three times or more within about 12.5 seconds after starting the erase mode.

○The ABS indicator light (LED) remains lit during the erase mode.

○After erasing, the ABS indicator light (LED) blinks and lights.

○Once erasing is finished, enter the self-diagnosis mode again to confirm that the service codes have been erased. If the ABS has been reset and all codes have been erased, the ABS indicator light (LED) lights.

Anti-Lock Brake System (Equipped Models)

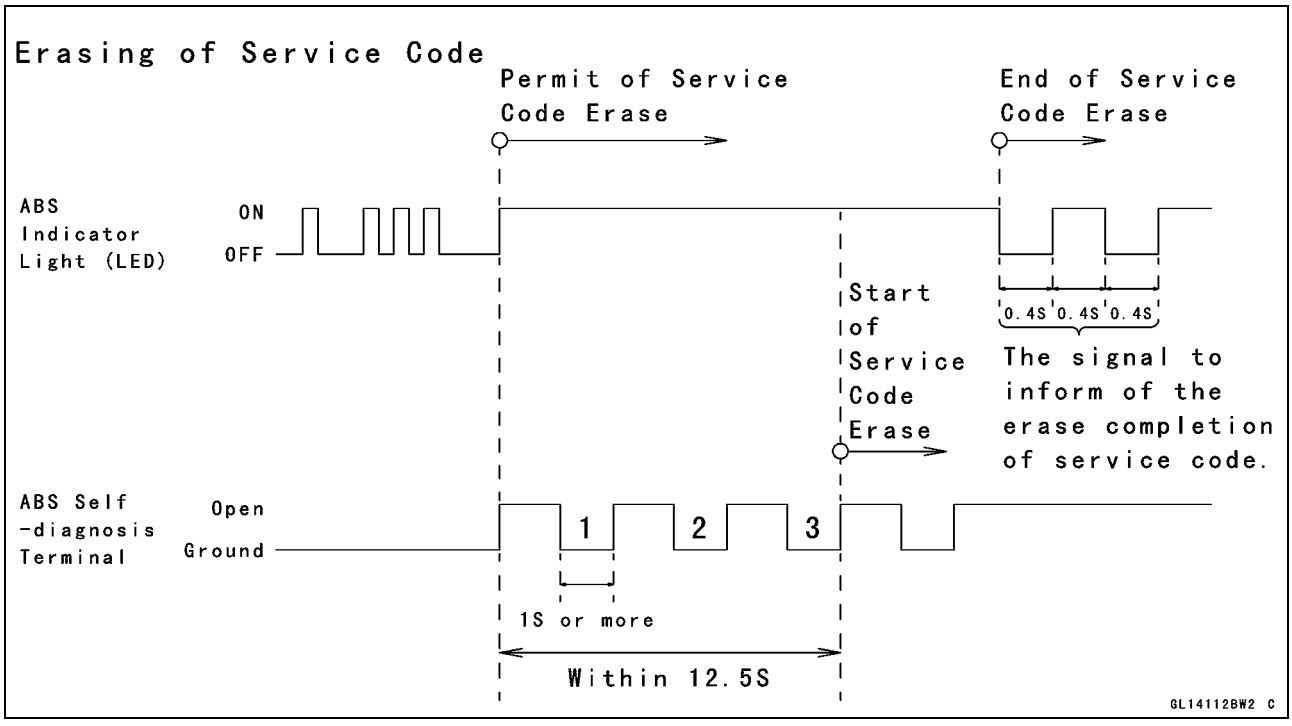

Anti-Lock Brake System (Equipped Models)

Self-diagnosis Flow Chart

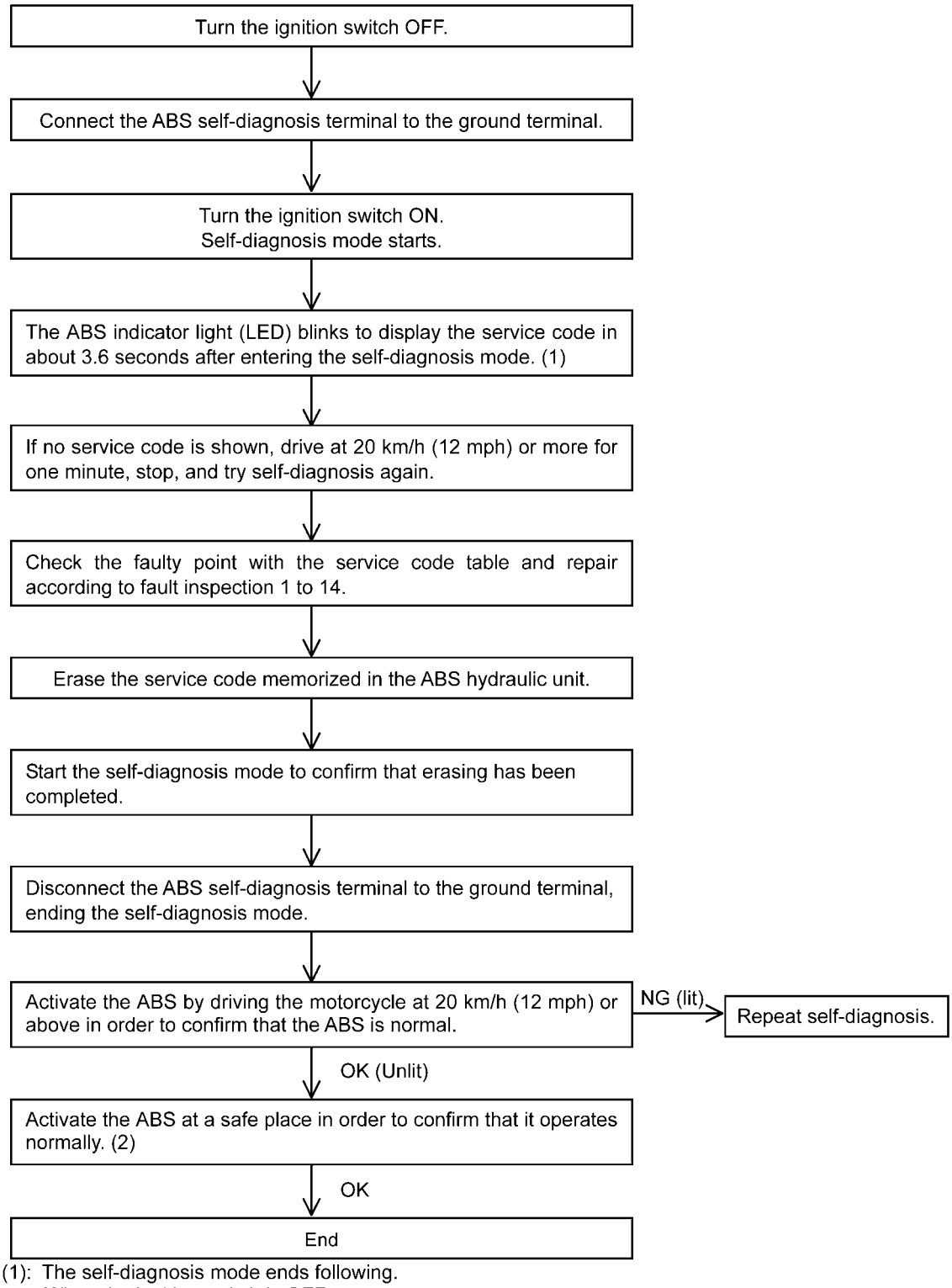

(1): The self-diagnosis mode ends following.
When the ignition switch is OFF.
When the motorcycle is driven while in the self-diagnosis mode.
When the self-diagnosis terminal disconnects.

(2): Apply brake suddenly at 30 km/h (19 mph) or more to confirm that the motorcycle stops smoothly and steady with pulsation on the brake lever and pedal.

GL14113B F

Anti-Lock Brake System (Equipped Models)

How to Read Service Codes

○Service codes are shown by a series of long and short blinks of the ABS indicator light (LED) as shown below.
○Read 10th digit and unit digit as the ABS indicator light (LED) blinks.
○When there are a number of faults, a maximum of all service codes (14 codes) can be stored and the display will begin starting from the small number code entered.
○For the display pattern, first the smallest number code is shown, next up to all service codes (14 codes) starting with the last one stored, then the display is repeated from the smallest number code once again.

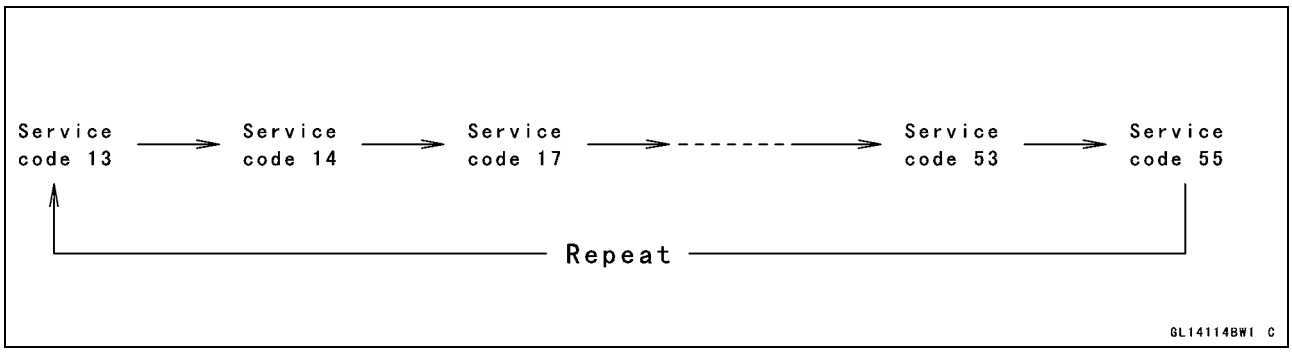

○If there is no fault, the ABS indicator light (LED) lights as shown in the figure.

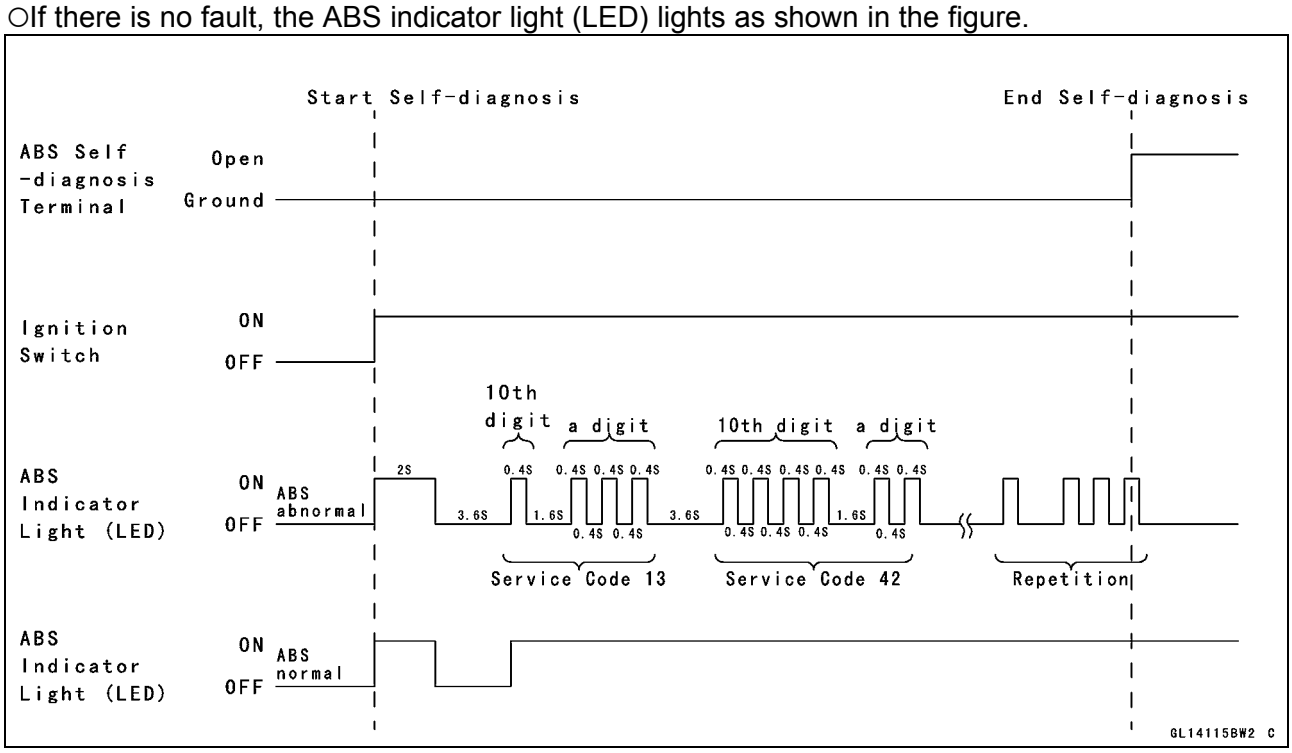

How to Erase Service Codes

○Even if the ignition switch is turned OFF, the battery or the ABS hydraulic unit are disconnected, all service codes remain in the ABS hydraulic unit.
○Refer to the Service Code Clearing Procedure for the service code erasure.

Anti-Lock Brake System (Equipped Models)

Service Code Table

Service Code	ABS Indicator Light (LED)	Problems	Light State
13	ON OFF	Rear intake solenoid valve trouble (shorted or open, stuck valve (ON))	ON
14		Rear outlet solenoid valve trouble (shorted or open, stuck valve (ON))	ON
17		Front intake solenoid valve trouble (shorted or open, stuck valve (ON))	ON
18		Front outlet solenoid valve trouble (shorted or open, stuck valve (ON))	ON
19		ABS solenoid valve relay trouble (wiring shorted or open, stuck relay (ON or OFF))	ON
25		Front, rear tire abnormal (substandard tire, deformation wheel, sensor rotor teeth number wrong)	ON
35		ABS motor relay trouble (wiring shorted, open or lock, stuck relay (ON or OFF)	ON
42		Front wheel rotation sensor signal abnormal (sensor or rotor missing, too large clearance, rotor tooth worn or missing)	ON
43		Front wheel rotation sensor wiring abnormal (wiring shorted or open)	ON
44		Rear wheel rotation sensor signal abnormal (sensor or rotor missing, too large clearance, rotor tooth worn or missing)	ON
45		Rear wheel rotation sensor wiring abnormal (wiring shorted or open)	ON
52		Power supply voltage abnormal (under-voltage)	ON
53		Power supply voltage abnormal (over-voltage)	ON
55		ECU trouble (ECU operation abnormal)	ON

Anti-Lock Brake System (Equipped Models)

ABS Indicator Light (LED) Inspection

● Turn the ignition switch ON.
★If the ABS indicator light (LED) [A] lights, it is normal.
★If the ABS indicator light (LED) does not light, go to step "ABS Indicator Light (LED) is Unlit (When the Ignition Switch turned to ON)".

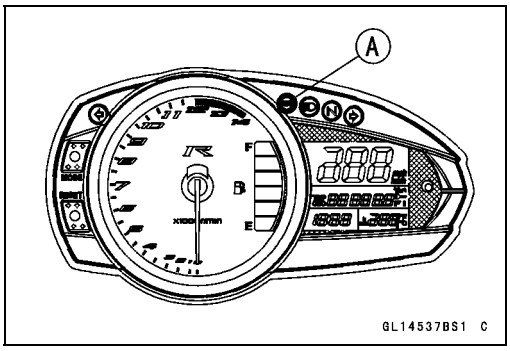

● Turn the ignition switch OFF.
★If the ABS indicator light (LED) [A] does not light, it is normal.
★If the ABS indicator light (LED) lights, go to step "ABS Indicator Light (LED) Lights (When the Motorcycle is Running, - No Service Code)".

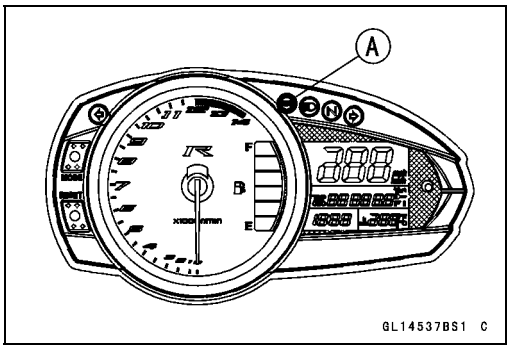

ABS Indicator Light (LED) is Unlit (When the Ignition Switch turned to ON)

● Do the 1st step test.
○Check the terminal voltage between the black/white lead terminal of the meter connector [A] and ground.

Special Tool - Hand Tester: 57001-1394

○Turn the ignition switch ON.

Terminal Voltage
Standard: About 10 V

★If the terminal voltage is not within the specification, 2nd step.
★If the terminal voltage correct, replace the meter assembly.

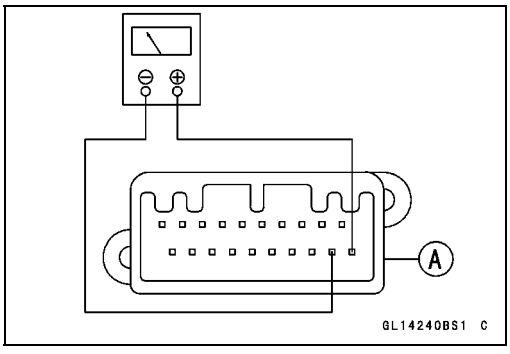

● Do the 2nd step test.
○Disconnect the meter connector.
○Check for continuity between the black/white lead terminal of the main harness side connector [A] and ground.
★If there is the continuity in the lead, replace or repair the main harness.
★If there is not the continuity in the lead, 3rd step.

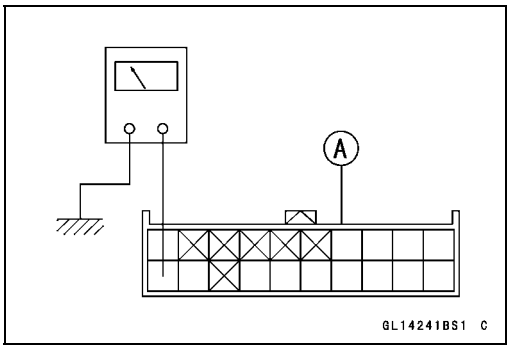

Anti-Lock Brake System (Equipped Models)

● Do the 3rd step test.
○Disconnect the ABS hydraulic unit connector.
○Check for continuity between the black/white lead terminal of the main harness side connector [A] and black/white lead terminal of the main harness side connector [B].
★If there is the continuity in the lead, replace the ABS hydraulic unit.
★If there is not the continuity in the lead, replace or repair the main harness.

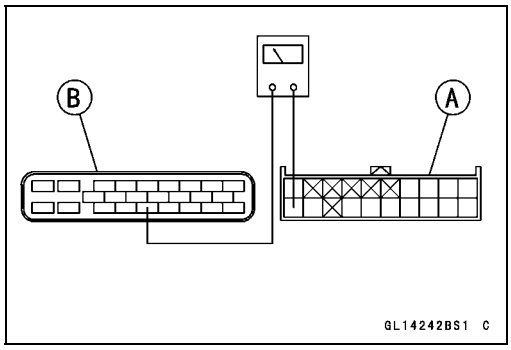

ABS Indicator Light (LED) Lights (When the Motorcycle is Running, - No Service Code)

● Do the 1st step test.
○Disconnect the ABS hydraulic unit connector and meter connector.
○Check for continuity between the black/white lead terminal of the main harness side connector [A] and black/white lead terminals of the main harness side connector [B].

Special Tool - Hand Tester: 57001-1394

★If there is the continuity in the lead, replace the ABS hydraulic unit.
★If there is not the continuity in the lead, replace or repair the main harness.

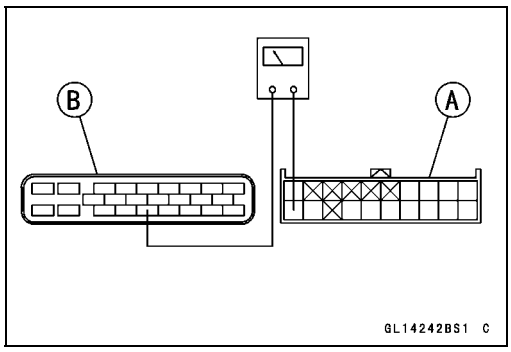

Solenoid Valve Inspection (Service Code 13,14,17,18)

● Do the 1st step test.
○Recheck the service code indication; erase the service code, perform the pre-diagnosis inspection 1 and 2, and retrieve the service code.
★If the ABS indicator light (LED) [A] blinks (Service Code 13, 14, 17, 18), faulty solenoid valve in the ABS hydraulic unit. Replace the ABS hydraulic unit.
★If the ABS indicator light (LED) does not blink (Service Code 13, 14, 17, 18), ABS system is normal (service code is not stored; temporary failure.).

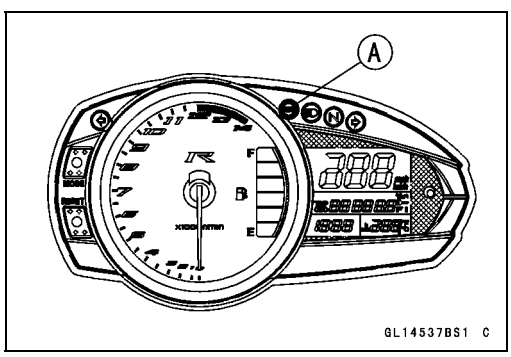

ABS Solenoid Valve Relay Inspection (Service Code 19)

● Do the 1st step test.
○Check the ABS solenoid valve relay fuse (20 A) [A].
★If the fuse blown, 2nd step.
★If the fuse correct, 4th step.

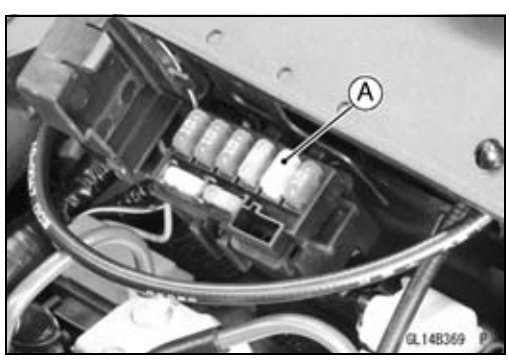

Anti-Lock Brake System (Equipped Models)

● Do the 2nd step test.
○Disconnect the ABS hydraulic unit connector [A].
○Check for continuity between the light green and black/yellow lead terminals of the ABS hydraulic unit connector.
★If there is the continuity in the lead, replace the ABS hydraulic unit.
★If there is not the continuity in the lead, 3rd step.

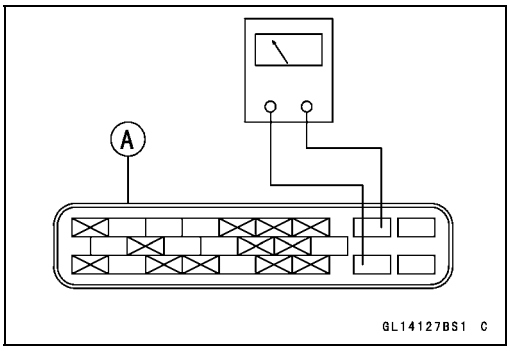

● Do the 3rd step test.
○Check for continuity between the light green lead terminal of the main harness side connector [A] and light green lead terminal of the fuse box 1 [B].
★If there is the continuity in the lead, replace the fuse.
★If there is not the continuity in the lead, replace or repair the main harness.

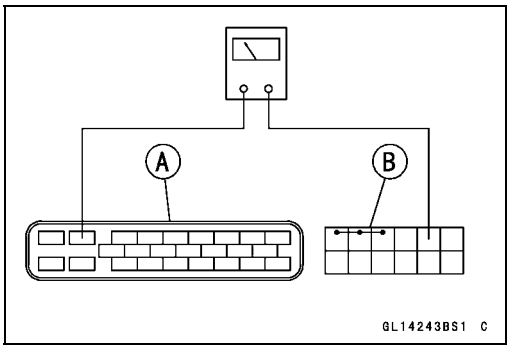

● Do the 4th step test.
○Check the battery terminal voltage between the light green lead terminal of the fuse box 1 [A] and ground.

Special Tool - Hand Tester 57001-1394

Battery Terminal Voltage
Standard: Battery Voltage

★If the battery terminal voltage is not within the specification, 5th step.
★If the battery terminal voltage correct, 6th step.

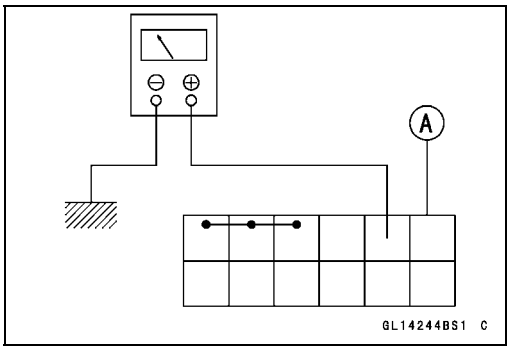

● Do the 5th step test.
○Check for continuity between the positive cable [A] of the battery and light green lead terminal of the main harness side connector [B].
★If there is the continuity in the lead, 4th step.
★If there is not the continuity in the lead, replace or repair the main harness.

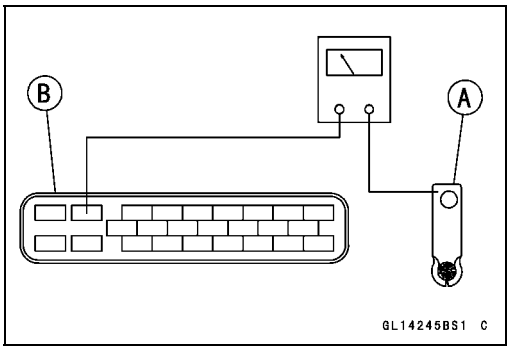

● Do the 6th step test.
○Recheck the service code indication; erase the service code, perform the pre-diagnosis inspection 1 and 2, and retrieve the service code.
★If the ABS indicator light (LED) [A] blinks (Service Code 19), faulty ABS solenoid valve relay in the ABS hydraulic unit. Replace the ABS hydraulic unit.
★If the ABS indicator light (LED) does not blink (Service Code 19), ABS system is normal (service code is not stored; temporary failure.).

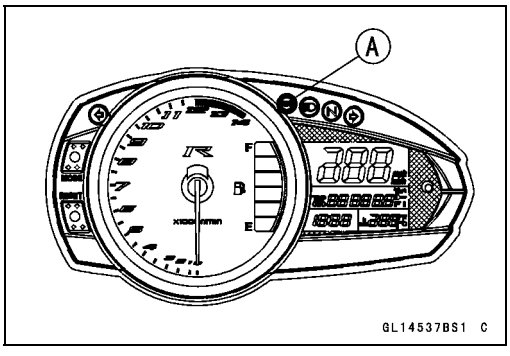

Anti-Lock Brake System (Equipped Models)

Front, Rear Wheel Rotation Difference Abnormal (Service Code 25)

● Do the 1st step test.
○Check the following and correct the faulty part.
Incorrect the tire pressure.
Tires not recommended for the motorcycle were installed (incorrect tire size).
Deformation of the wheel or tire.
Sensor rotor for missing teeth and clogging with foreign matter.
★If the all parts correct, 2nd step.

● Do the 2nd step test.
○ Recheck the service code indication; erase the service code, perform the pre-diagnosis inspection 1 and 2, and retrieve the service code.
★If the ABS indicator light (LED) [A] blinks (Service Code 25), faulty ECU in the ABS hydraulic unit. Replace the ABS hydraulic unit.
★If the ABS indicator light (LED) does not blink (Service Code 25), ABS system is normal (service code is not stored; temporary failure.).

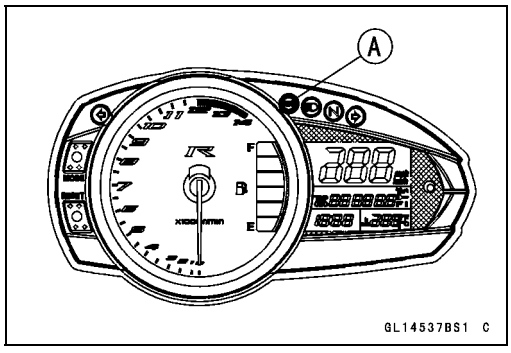

ABS Pump Motor Relay Inspection (Service Code 35)

● Do the 1st step test.
○Check the ABS pump motor relay fuse (30 A) [A].
★If the fuse blown, 2nd step.
★If the fuse correct, 4th step.

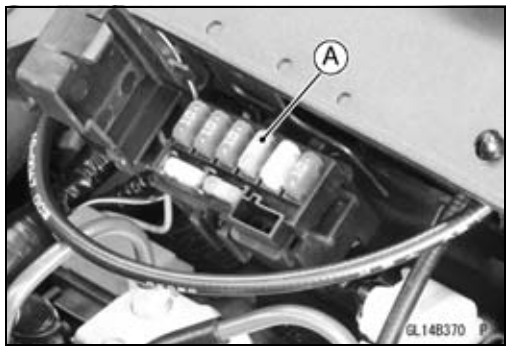

● Do the 2nd step test.
○Disconnect the ABS hydraulic unit connector.
○Check for continuity between the red and black/yellow lead terminals of the ABS hydraulic unit connector [A].
★If there is the continuity in the lead, replace the ABS hydraulic unit.
★If there is not the continuity in the lead, 3rd step.

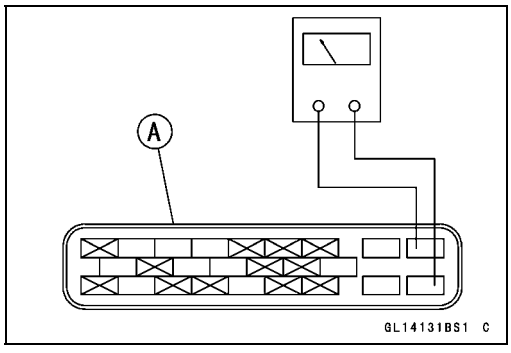

● Do the 3rd step test.
○Check for continuity between the red lead terminal of the main harness side connector [A] and red lead terminal of the fuse box 1 [B].
★If there is the continuity in the lead, replace the fuse.
★If there is not the continuity in the lead, replace or repair the main harness.

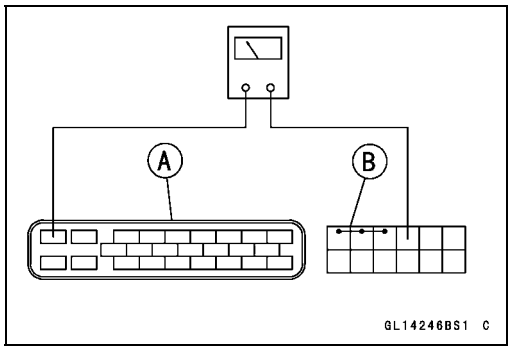

● Do the 4th step test.
○Check the battery terminal voltage between the red lead terminal of the fuse box 1 [A] and ground.

Special Tool - Hand Tester: 57001-1394

Battery Terminal Voltage
Standard: Battery Voltage

★If the battery terminal voltage is not within the specification, 5th step.
★If the battery terminal voltage correct, 6th step.

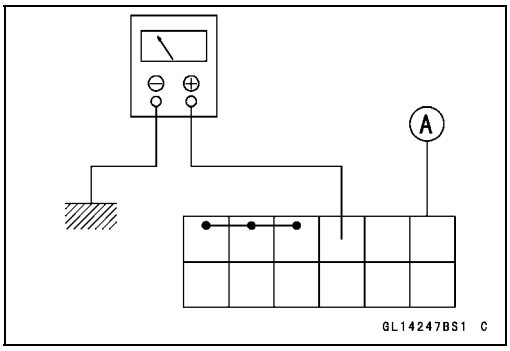

● Do the 5th step test.
○Check for continuity between the positive cable [A] of the battery and red lead terminal of the main harness side connector [B].
★If there is the continuity in the lead, 4th step.
★If there is not the continuity in the lead, replace or repair the main harness.

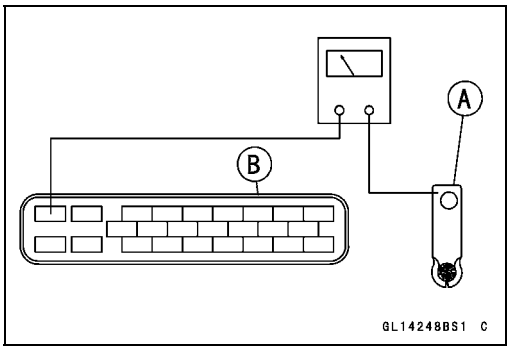

● Do the 6th step test.
○Recheck the service code indication; erase the service code, perform the pre-diagnosis inspection 1 and 2, and retrieve the service code.
★If the ABS indicator light (LED) [A] blinks (Service Code 35), faulty ABS pump motor relay in the ABS hydraulic unit. Replace the ABS hydraulic unit.
★If the ABS indicator light (LED) does not blink (Service Code 35), ABS system is normal (service code is not stored; temporary failure.).

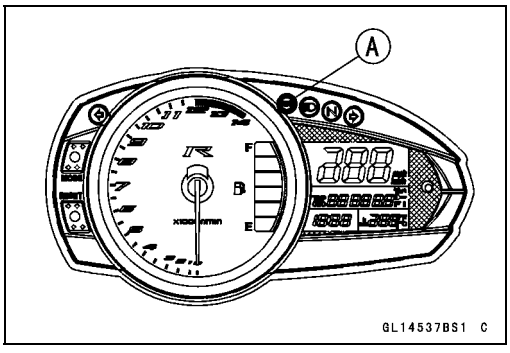

Front Wheel Rotation Sensor Signal Abnormal (Service Code 42)

● Do the 1st step test.
○Measure the air gap between the front wheel rotation sensor and sensor rotor.
Thickness Gauge [A]

Air Gap
Standard: 0.7 ~ 0.9 mm (0.028 ~ 0.035 in.)

★If the measurement is over standard, check each part for deformation and looseness and correct accordingly. Recheck the air gap.
★If the measurement is correct, 2nd step.

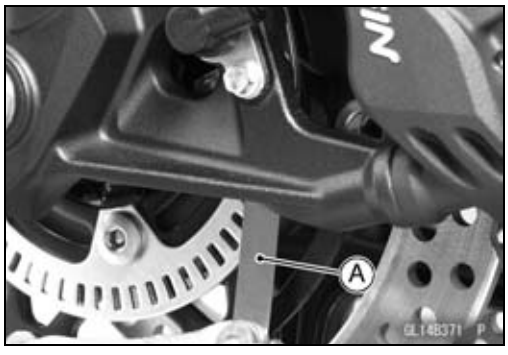

Anti-Lock Brake System (Equipped Models)

● Do the 2nd step test.
○Check that there is iron or other magnetic deposits between the sensor [A] and sensor rotor [B], and the sensor rotor slots for obstructions.
○Check the installation condition of the sensor for looseness.
○Check the sensor and sensor rotor tip for deformation or damage (e.g., chipped sensor rotor teeth).
★If the sensor and sensor rotor in bad condition, remove the any deposits. Install the properly or replace faulty part.
★If the all correct, 3rd step.

● Do the 3rd step test.
○Recheck the service code indication; erase the service code, perform the pre-diagnosis inspection 1 and 2, and retrieve the service code.
★If the ABS indicator light (LED) [A] blinks (Service Code 42), faulty ECU in the ABS hydraulic unit. Replace the ABS hydraulic unit.
★If the ABS indicator light (LED) does not blink (Service Code 42), ABS system is normal (service code is not stored; temporary failure.).

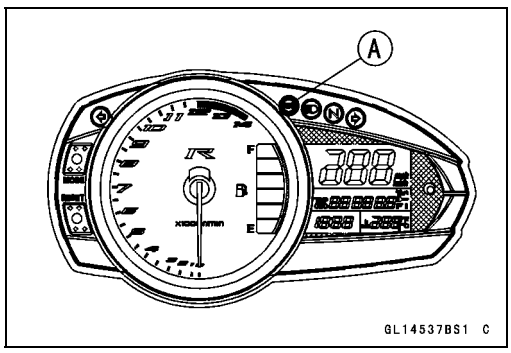

Front Wheel Rotation Sensor Wiring Inspection (Service Code 43)

● Do the 1st step test.
○Disconnect the ABS hydraulic unit connector and front wheel rotation sensor connector.
○Short the black/red and green lead terminals of the main harness side connector [A] with a jumper lead, and check for continuity between the black/red and green lead terminals of the main harness side connector [B].
★If there is the continuity in the lead, 2nd step.
★If there is not the continuity in the lead, replace or repair the main harness.

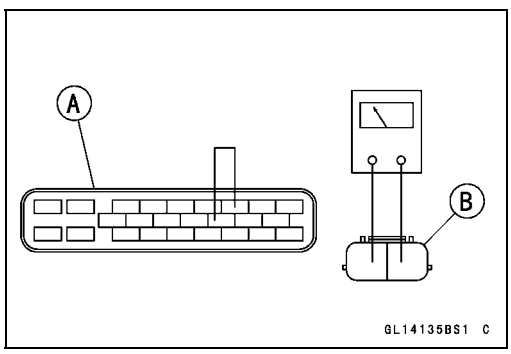

● Do the 2nd step test.
○ Check for continuity between the black lead terminal of the sensor connector [A] and ground, and white lead terminal of the sensor connector and ground.
★If there is the continuity in the lead, replace the front wheel rotation sensor.
★If there is not the continuity in the lead, 3rd step.

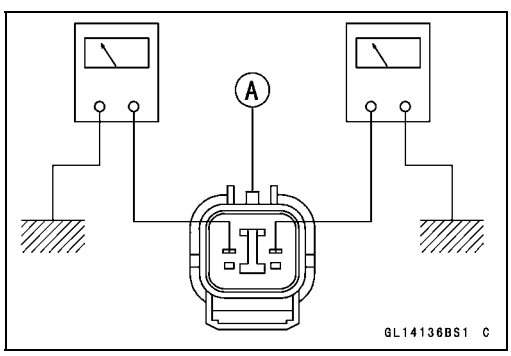

● Do the 3rd step test.
○Recheck the service code indication; erase the service code, perform the pre-diagnosis inspection 1 and 2, and retrieve the service code.
★If the ABS indicator light (LED) [A] blinks (Service Code 43), faulty ECU in the ABS hydraulic unit. Replace the ABS hydraulic unit.
★If the ABS indicator light (LED) does not blink (Service Code 43), ABS system is normal (service code is not stored; temporary failure.).

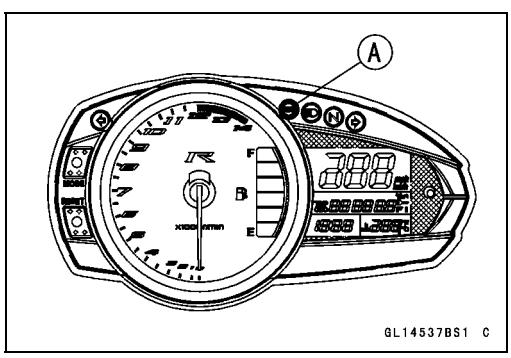

Anti-Lock Brake System (Equipped Models)

Rear Wheel Rotation Sensor Signal Abnormal (Service Code 44)

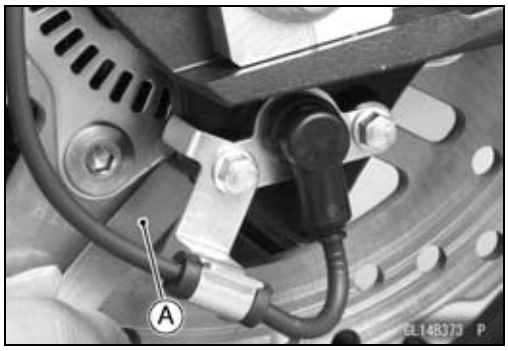

● Do the 1st step test.

○Measure the air gap between the rear wheel rotation sensor and sensor rotor.
Thickness Gauge [A]

Air Gap
Standard: 0.7 ~ 0.9 mm (0.028 ~ 0.035 in.)

★If the measurement is over standard, check each part for deformation and looseness and correct accordingly. Recheck the air gap.

★If the measurement is correct, 2nd step.

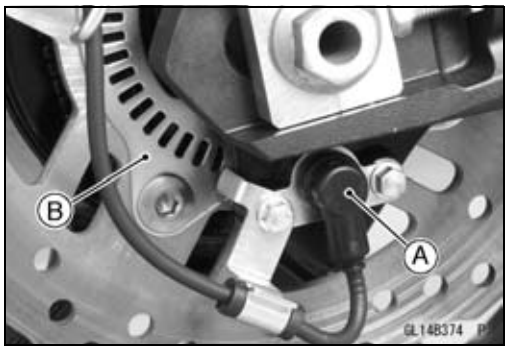

● Do the 2nd step test.

○Check that there is iron or other magnetic deposits between the sensor [A] and sensor rotor [B], and the sensor rotor slots for obstructions.

○Check the installation condition of the sensor for looseness.

○Check the sensor and sensor rotor tip for deformation or damage (e.g., chipped sensor rotor teeth).

★If the sensor and sensor rotor in bad condition, remove the any deposits. Install the properly or replace faulty part.

★If the all correct, 3rd step.

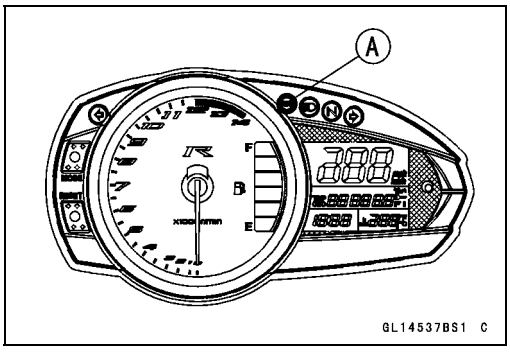

● Do the 3rd step test.

○Recheck the service code indication; erase the service code, perform the pre-diagnosis inspection 1 and 2, and retrieve the service code.

★If the ABS indicator light (LED) [A] blinks (Service Code 44), faulty ECU in the ABS hydraulic unit. Replace the ABS hydraulic unit.

★If the ABS indicator light (LED) does not blink (Service Code 44), ABS system is normal (service code is not stored; temporary failure.).

Rear Wheel Rotation Sensor Wiring Inspection (Service Code 45)

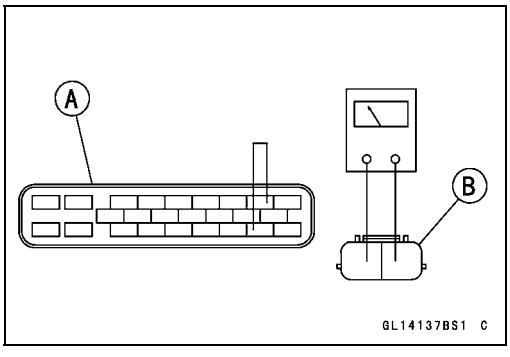

● Do the 1st step test.

○Disconnect the ABS hydraulic unit connector and rear wheel rotation sensor connector.

○Short the black and brown/black lead terminals of the main harness side connector [A] with a jumper lead, and check for continuity between the black and brown/black lead terminals of the main harness side connector [B].

★If there is the continuity in the lead, 2nd step.

★If there is not the continuity in the lead, replace or repair the main harness.

Anti-Lock Brake System (Equipped Models)

● Do the 2nd step test.
○Check for continuity between the black lead terminal of the sensor connector [A] and ground, and white lead terminal of the sensor connector and ground.
★If there is the continuity in the lead, replace the rear wheel rotation sensor.
★If there is not the continuity in the lead, 3rd step.

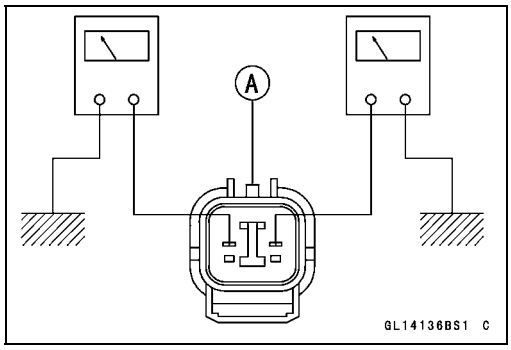

● Do the 3rd step test.
○Recheck the service code indication; erase the service code, perform the pre-diagnosis inspection 1 and 2, and retrieve the service code.
★If the ABS indicator light (LED) [A] blinks (Service Code 45), faulty ECU in the ABS hydraulic unit. Replace the ABS hydraulic unit.
★If the ABS indicator light (LED) does not blink (Service Code 45), ABS system is normal (service code is not stored; temporary failure.).

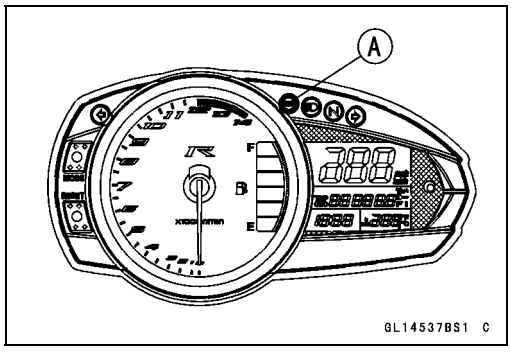

Power Supply Voltage Abnormal (Under-Voltage) (Service Code 52)

● Do the 1st step test.
○Disconnect the ignition switch connector and ABS hydraulic unit connector.
○Check for continuity between the brown lead terminal of the main harness side connector [A] and yellow lead terminal of the main harness side connector [B].
★If there is the continuity in the lead, 2nd step.
★If there is not the continuity in the lead, inspect the ABS ECU fuse (10 A) (see Fuse Inspection in the Electrical System chapter) and replace or repair the main harness.

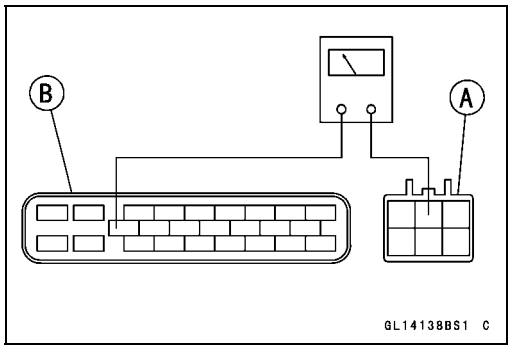

● Do the 2nd step test.
○Connect the ignition switch connector and ABS hydraulic unit connector.
○Check the battery terminal voltage, connect the hand tester to the brown terminal of ignition switch connector [A] and ground.

Special Tool - Hand Tester: 57001-1394

○Turn the ignition switch ON.

Battery Terminal Voltage
Standard: 10 V or more

★If the battery terminal voltage is not within the specification, 3rd step.
★If the battery terminal voltage correct, 4th step.

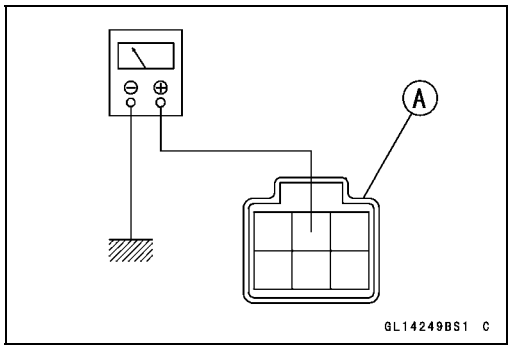

● Do the 3rd step test.
○Inspect the following parts.
Battery (see Charging Condition Inspection in the Electrical System chapter)
Ignition Switch (see Switch Inspection in the Electrical System chapter)
Main Harness (see Wiring Inspection in the Electrical System chapter)
Main Fuse 30 A (see Fuse Inspection in the Electrical System chapter)

● Do the 4th step test.
○Recheck the service code indication; erase the service code, perform the pre-diagnosis inspection 1 and 2, and retrieve the service code.
★If the ABS indicator light (LED) [A] blinks (Service Code 52), faulty ECU in the ABS hydraulic unit. Replace the ABS hydraulic unit.
★If the ABS indicator light (LED) does not blink (Service Code 52), ABS system is normal (service code is not stored; temporary failure.).

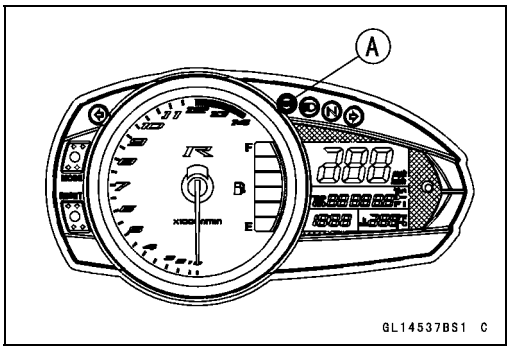

Power Supply Voltage Abnormal (Over-Voltage) (Service Code 53)

● Do the 1st step test.
○Disconnect the ignition switch connector and ABS hydraulic unit connector.
○Check for continuity between the brown lead terminal of the main harness side connector [A] and yellow lead terminal of the main harness side connector [B].
★If there is the continuity in the lead, 2nd step.
★If there is not the continuity in the lead, inspect the ABS ECU fuse (10 A) (see Fuse Inspection in the Electrical System chapter) and replace or repair the main harness.

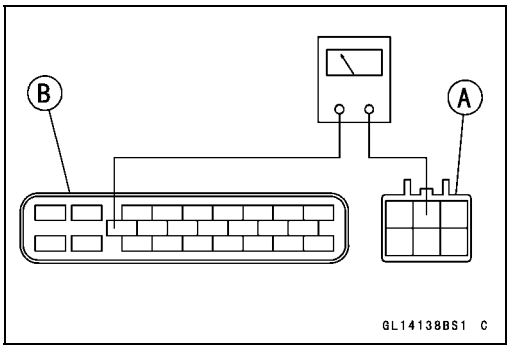

● Do the 2nd step test.
○Connect the ignition switch connector and ABS hydraulic unit connector.
○Check the battery terminal voltage, connect the hand tester to the brown terminal of ignition switch connector [A] and ground.

Special Tool - Hand Tester: 57001-1394

○Turn the ignition switch ON.

Battery Terminal Voltage
Standard: 16 V or less

★If the battery terminal voltage is not within the specification, 3rd step.
★If the battery terminal voltage correct, 4th step.

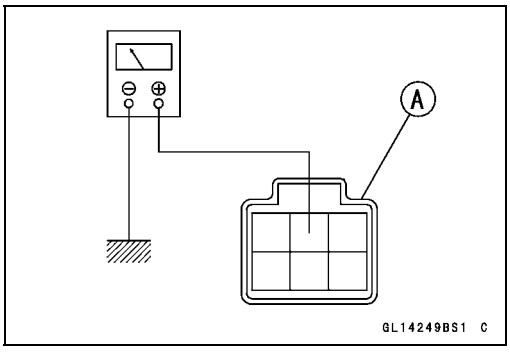

● Do the 3rd step test.
○Check the battery condition and regulator/rectifier (see Charging Condition Inspection, Regulator/Rectifier Inspection in the Electrical System chapter).

Anti-Lock Brake System (Equipped Models)

● Do the 4th step test.
○Recheck the service code indication; erase the service code, perform the pre-diagnosis inspection 1 and 2, and retrieve the service code.
★If the ABS indicator light (LED) [A] blinks (Service Code 53), faulty ECU in the ABS hydraulic unit. Replace the ABS hydraulic unit.
★If the ABS indicator light (LED) does not blink (Service Code 53), ABS system is normal (service code is not stored; temporary failure.).

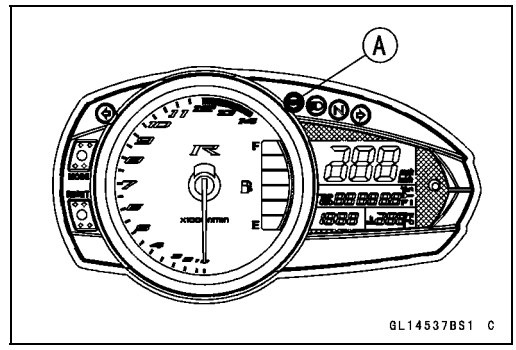

ECU Inspection (Service Code 55)

● Do the 1st step test.
○Recheck the service code indication; erase the service code, perform the pre-diagnosis inspection 1 and 2, and retrieve the service code.
★If the ABS indicator light (LED) [A] blinks (Service Code 55), faulty ECU in the ABS hydraulic unit. Replace the ABS hydraulic unit.
★If the ABS indicator light (LED) does not blink (Service Code 55), ABS system is normal (service code is not stored; temporary failure.).

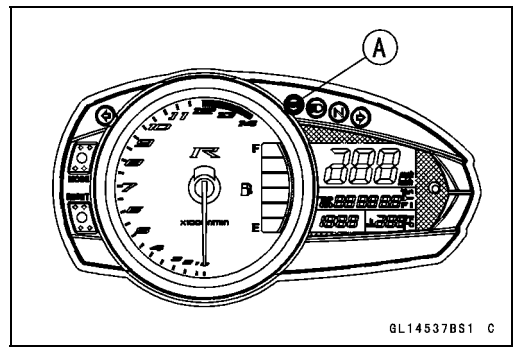

ABS Hydraulic Unit Removal

NOTICE

The ABS hydraulic unit [A] has been adjusted and set with precision at the factory. Therefore, it should be handled carefully, never struck sharply, as with a hammer, or allowed to fall on a hard surface.
Be careful not to get water or mud on the ABS hydraulic unit.

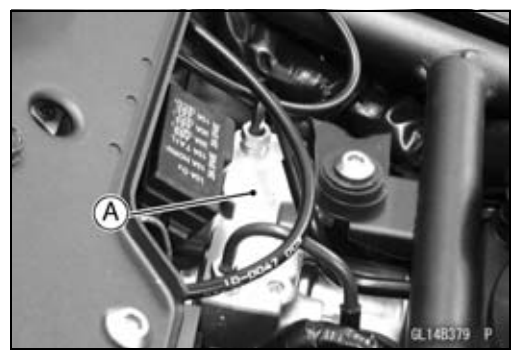

● Drain the brake fluid from the front and rear brake lines.
○Drain the brake fluid through the bleed valve by pumping the brake lever and pedal.

● Remove:
Seats (see Rear/Front Seat Removal in the Frame chapter)
Rear Fender (see Flap and Rear Fender Removal in the Frame chapter)
● Clean the ABS hydraulic unit.

NOTICE

Clean all fittings on the ABS hydraulic unit and the rear master cylinder because dirt around the banjo bolts could contaminate the brake fluid in the line during removal/installation.
Spread out a shop towel around the ABS hydraulic unit before removing the brake line so that brake fluid does not leak on the parts.

Anti-Lock Brake System (Equipped Models)

● Remove the bolt [A].

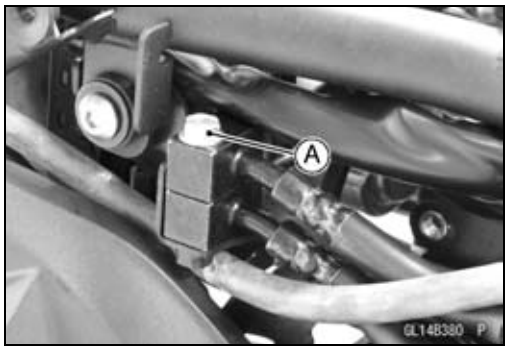

● Disconnect the connector [A].
○Unlock the joint lock [B] as shown in the figure.
● Remove:
Bolts [C]
Brake Pipe Joint Nuts [D] [E] [F] (using the Flare Nut Wrench)
● Tape the brake line opening to prevent brake fluid leakage or contamination by foreign matter.

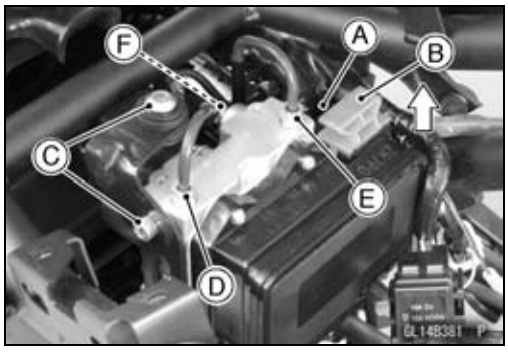

NOTICE

Brake fluid quickly ruins painted plastic surfaces; any spilled fluid should be completely washed away immediately.

● Remove:
Bolts [A]
Brake Pipe Joint Nut [B] (using the Flare Nut Wrench)
ABS Hydraulic Unit [C]

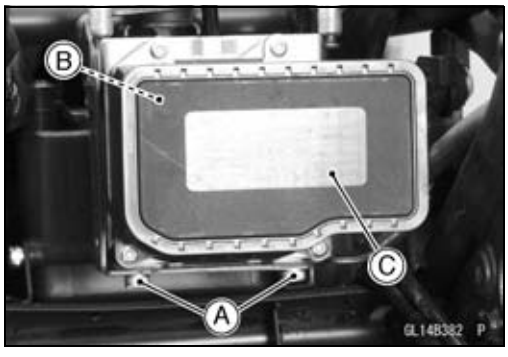

NOTICE

The ABS hydraulic unit [A] has been adjusted and set with precision at the factory. Do not try to disassemble and repair the ABS hydraulic unit.

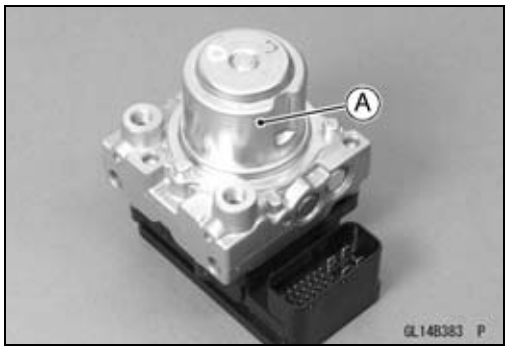

Anti-Lock Brake System (Equipped Models)

ABS Hydraulic Unit Installation

- Install the ABS hydraulic unit to the bracket.

NOTICE

Brake fluid quickly ruins painted plastic surfaces; any spilled fluid should be completely washed away immediately.

- When installing the hoses and pipes, avoid sharp bending, kinking, flatting or twisting, and run the hoses according to Cable, Wire, and Hose Routing section in the Appendix chapter.
- Before installing the brake pipe, check to see that there is no damage on the threads of the brake pipe joint nut.

★If there is any damage, replace the damaged parts with new ones.

NOTE

○*Tighten the brake pipe joint nuts at both ends of the brake pipe temporarily and then tighten them to the specified torque.*

- Tighten the brake pipe joint nuts with the flare nut wrench.

Torque - Brake Pipe Joint Nuts: 18 N·m (1.8 kgf·m, 13 ft·lb)

- Tighten the bolts.

- Run the lead correctly, and connect the connector [A] securely.

○Lock the joint lock [B] as shown in the figure.

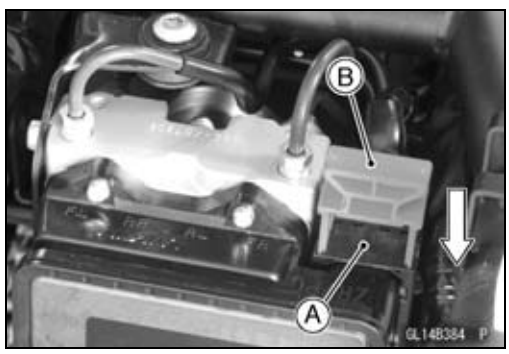

- Bleed the brake line (see Brake Line Bleeding).
- Check the brake for good braking power, no brake drag, and no fluid leakage.
- Install the removed parts (see appropriate chapters).

ABS Hydraulic Unit Inspection

- Remove the ABS hydraulic unit (see ABS Hydraulic Unit Removal).
- Visually inspect the ABS hydraulic unit.

★Replace the ABS hydraulic unit if any of them are cracked, or otherwise damaged.

Anti-Lock Brake System (Equipped Models)

- Visually inspect the connector terminals [A].

★Replace the ABS hydraulic unit or main harness if either of the terminals are cracked, bent, or otherwise damaged.

★If the ABS hydraulic unit connector is clogged with mud or dust, blow it off with compressed air.

Front Wheel Rotation Sensor Removal

NOTICE

The wheel rotation sensor should be handled carefully, never struck sharply, as with a hammer, or allowed to fall on a hard surface since the wheel rotation sensor is precision made. Be careful not to get water or mud on the wheel rotation sensor.
Do not try to disassemble or repair the wheel rotation sensor.

- Remove:
  Upper Fairing (see Upper Fairing Removal in the Frame chapter)
  Clamp [A]
  Connector [B] (Disconnect)

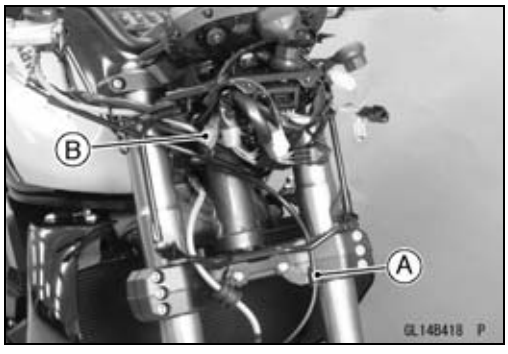

- Remove:
  Clamps [A]
  Bolts [B]
  Front Wheel Rotation Sensor [C]

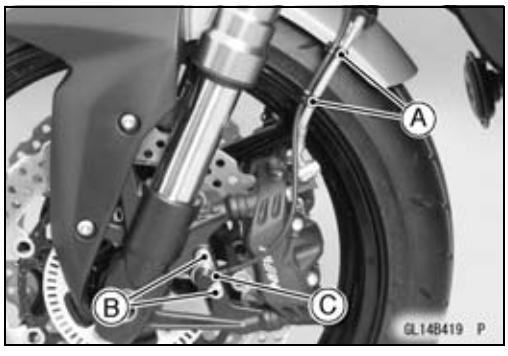

Front Wheel Rotation Sensor Installation

- Installation is the reverse of removal.

○Run the lead correctly (see Cable, Wire, and Hose Routing section in the Appendix chapter).

Anti-Lock Brake System (Equipped Models)

Rear Wheel Rotation Sensor Removal

NOTICE

The wheel rotation sensor should be handled carefully, never struck sharply, as with a hammer, or allowed to fall on a hard surface since the wheel rotation sensor is precision made. Be careful not to get water or mud on the wheel rotation sensor.
Do not try to disassemble or repair the wheel rotation sensor.

● Remove:
Sub Side Cover (see Sub Side Cover Removal)
Frame Cover (see Frame Cover Removal)
Connector [A] (Disconnect)

● Remove:
Clamps [A]
Bolts [B]
Rear Wheel Rotation Sensor [C]

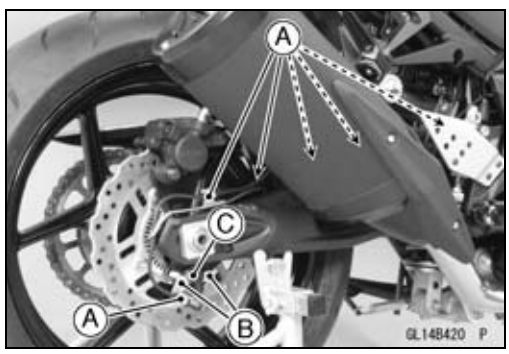

Rear Wheel Rotation Sensor Installation

● Installation is the reverse of removal.
○Run the lead correctly (see Cable, Wire, and Hose Routing section in the Appendix chapter).

Anti-Lock Brake System (Equipped Models)

Wheel Rotation Sensor Inspection

- Remove the front wheel rotation sensor [A] from the front fork.
- Remove the rear wheel rotation sensor [B] from the caliper bracket.
- Visually inspect the wheel rotation sensors.

★Replace the wheel rotation sensor if it is cracked, bent, or otherwise damaged.

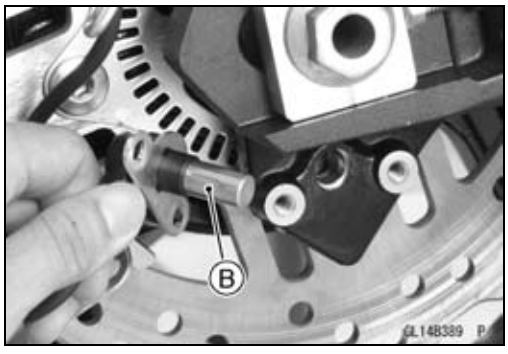

Wheel Rotation Sensor Air Gap Inspection

- Raise the front/rear wheel off the ground (see Front/Rear Wheel Removal in the Wheels/Tires chapter).
- Measure the air gap between the sensor and sensor rotor at several points by turning the wheel slowly.
  Thickness Gauge [A]

Air Gap

Standard:

Front	**0.7 ~ 0.9 mm (0.028 ~ 0.035 in.)**
Rear	**0.7 ~ 0.9 mm (0.028 ~ 0.035 in.)**

NOTE

○*The sensor air gap cannot be adjusted.*

★If the air gap is not within the specification, inspect the hub bearing (see Hub Bearing Inspection in the Wheels/Tires chapter), sensor installation condition and sensor (see Wheel Rotation Sensor Inspection).

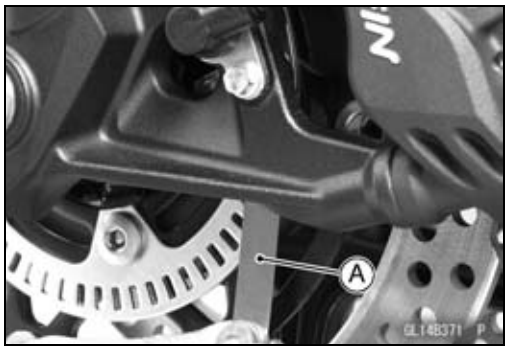

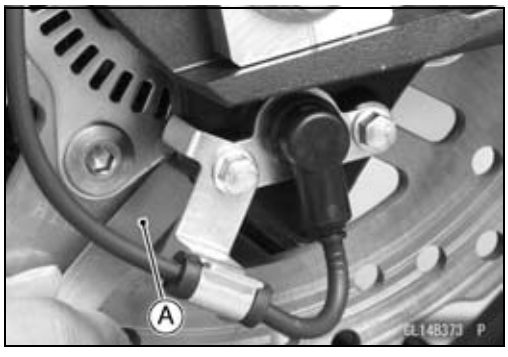

Anti-Lock Brake System (Equipped Models)

Wheel Rotation Sensor Rotor Inspection

- Remove:
  Wheels (see Front/Rear Wheel Removal in the Wheels/Tires chapter)
  Brake Disc Mounting Bolts [A]
  Sensor Rotor [B]
  Front Wheel [C]
  Rear Wheel [D]

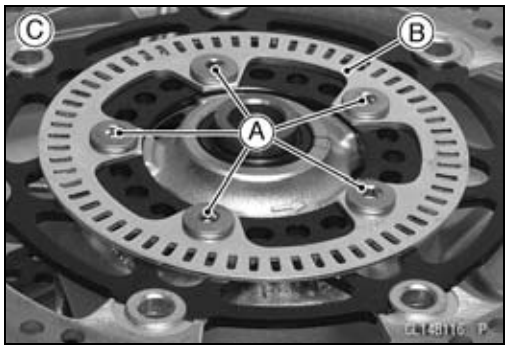

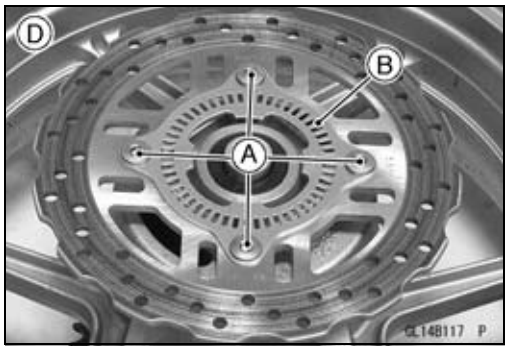

- Visually inspect the wheel rotation sensor rotor.

★If the rotor is deformed or damaged (chipped teeth [A]), replace the sensor rotor with a new one.

★If there is iron or other magnetic deposits [B], remove the deposits.

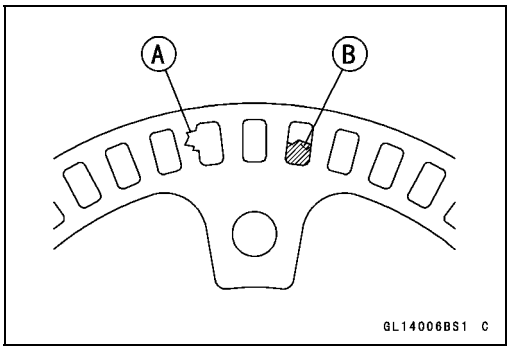

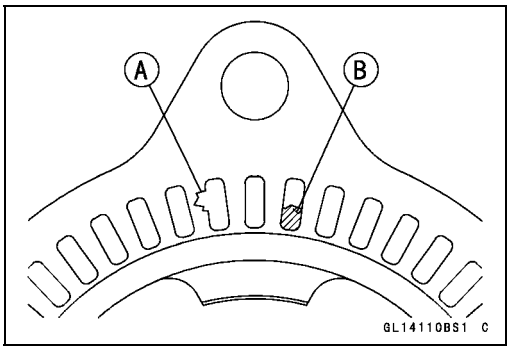

ABS Solenoid Valve Relay Fuse (20 A) Removal

- Refer to the Fuse Box Fuse Removal in the Electrical System chapter.

ABS Motor Relay Fuse (30 A) Removal

- Refer to the Fuse Box Fuse Removal in the Electrical System chapter.

ABS ECU Fuse (10 A) Removal

- Refer to the Fuse Box Fuse Removal in the Electrical System chapter.

Anti-Lock Brake System (Equipped Models)

Fuse Installation

- If a fuse fails during operation, inspect the electrical system to determine the cause, and then replace it with a new fuse of proper amperage (see Fuse Installation in the Electrical System chapter).

Fuse Inspection

- Remove the fuses (see ABS Solenoid Valve Relay Fuse (20 A)/ABS Motor Relay Fuse (30 A)/ABS ECU Fuse (10 A) Removal).
- Refer to the Fuse Inspection in the Electrical System chapter.

Suspension

Table of Contents

Exploded View 13-2
Specifications 13-6
Special Tools 13-7
Front Fork 13-9
- Rebound Damping Force Adjustment 13-9
- Spring Preload Adjustment 13-9
- Front Fork Removal (Each Fork Leg) 13-10
- Front Fork Installation 13-10
- Fork Oil Change 13-10
- Front Fork Disassembly 13-16
- Front Fork Assembly 13-17
- Inner Tube, Outer Tube Inspection 13-18
- Dust Seal Inspection 13-18
- Spring Tension Inspection 13-18

Rear Shock Absorber 13-19
- Rebound Damping Force Adjustment 13-19
- Spring Preload Adjustment 13-19
- Rear Shock Absorber Removal 13-20
- Rear Shock Absorber Installation 13-21
- Rear Shock Absorber Inspection 13-21

Swingarm 13-22
- Swingarm Removal 13-22
- Swingarm Installation 13-23
- Swingarm Bearing Removal 13-24
- Swingarm Bearing Installation 13-24
- Swingarm Bearing, Sleeve Inspection 13-25
- Swingarm Bearing Lubrication 13-26
- Chain Guide Inspection 13-26

Tie-Rod, Rocker Arm 13-27
- Tie-Rod Removal 13-27
- Tie-Rod Installation 13-27
- Rocker Arm Removal 13-27
- Rocker Arm Installation 13-27
- Tie-Rod and Rocker Arm Bearing Removal 13-28
- Tie-Rod and Rocker Arm Bearing Installation 13-28
- Rocker Arm/Tie-Rod Bearing, Sleeve Inspection 13-29
- Rocker Arm/Tie-Rod Bearing Lubrication 13-29

Exploded View

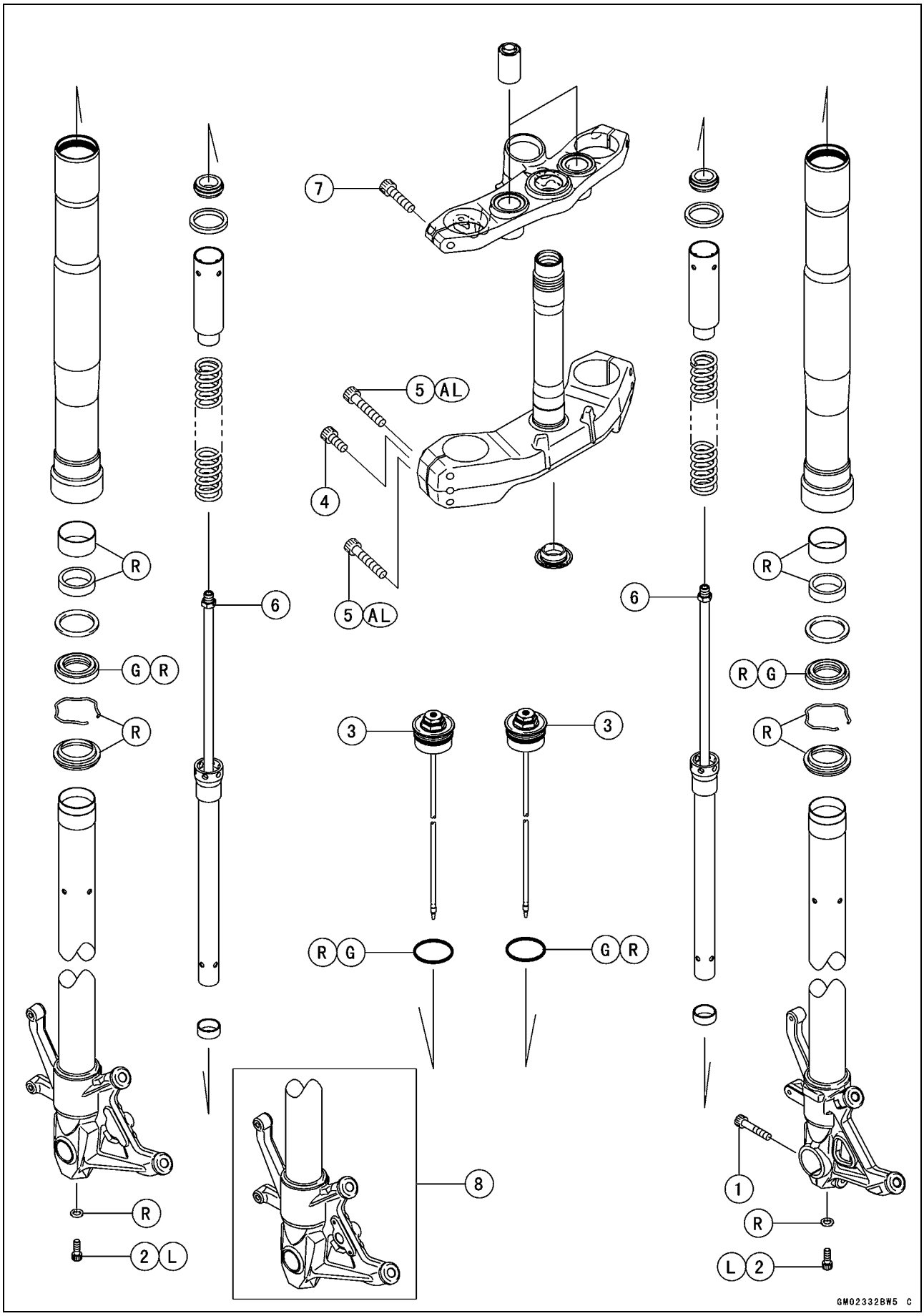

Exploded View

No.	Fastener	Torque			Remarks
		N·m	kgf·m	ft·lb	
1	Front Axle Clamp Bolt	20	2.0	15	
2	Front Fork Bottom Allen Bolts	20	2.0	15	L
3	Front Fork Top Plugs	34	3.5	25	
4	Lower Front Fork Clamp Bolts (Middle)	17.5	1.8	13	
5	Lower Front Fork Clamp Bolts (Upper, Lower)	25	2.5	18	AL
6	Piston Rod Nuts	20	2.0	15	
7	Upper Front Fork Clamp Bolts	20	2.0	15	

8. Inner Tube (ABS Equipped Models)
AL: Tighten the two clamp bolts alternately two times to ensure even tightening torque.
G: Apply grease.
L: Apply a non-permanent locking agent.
R: Replacement Parts

Exploded View

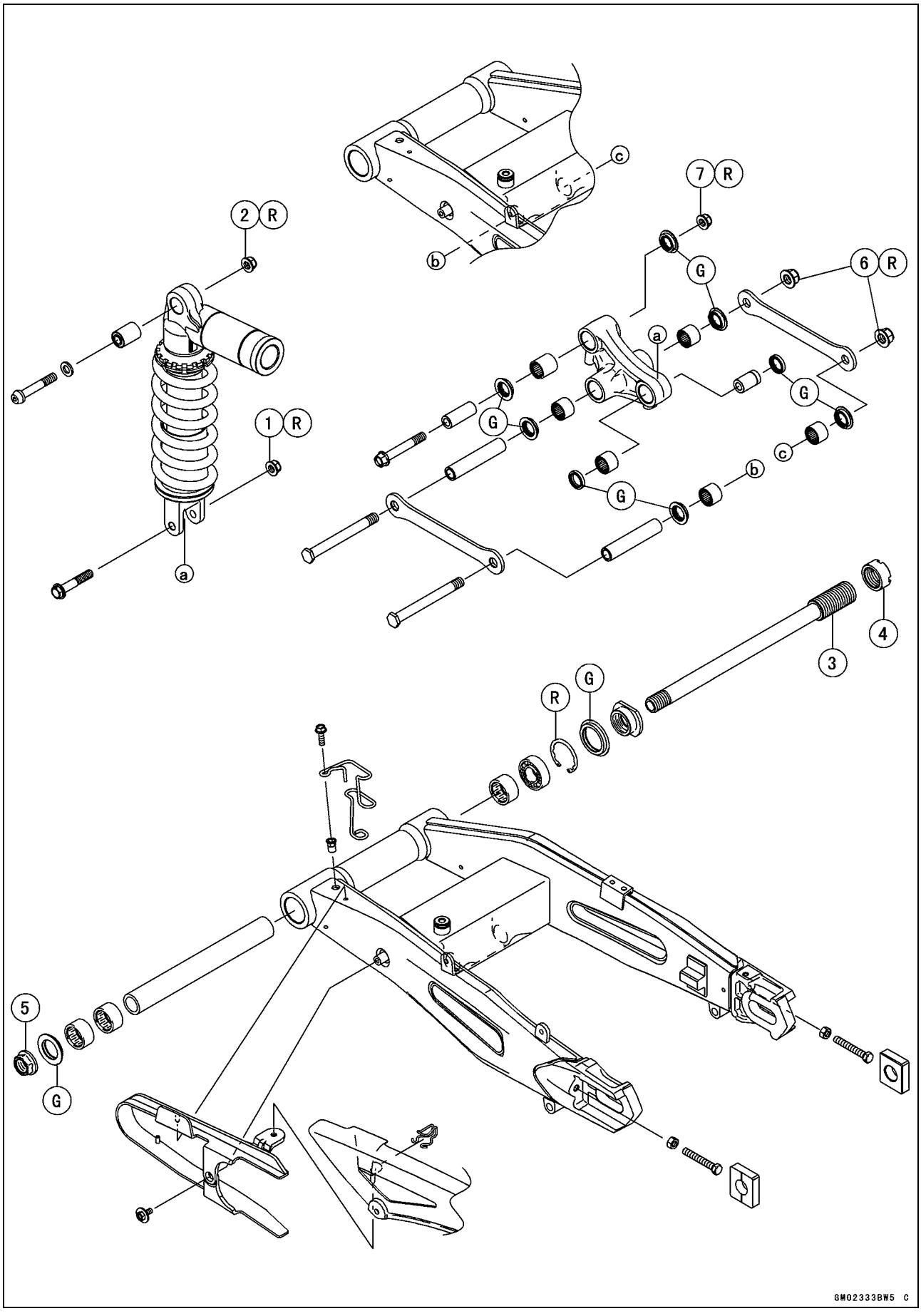

Exploded View

No.	Fastener	Torque			Remarks
		N·m	kgf·m	ft·lb	
1	Rear Shock Absorber Nut (Lower)	34	3.5	25	R
2	Rear Shock Absorber Nut (Upper)	34	3.5	25	R
3	Swingarm Pivot Shaft	9.8	1.0	87 in·lb	
4	Swingarm Pivot Shaft Locknut	98	10	72	
5	Swingarm Pivot Shaft Nut	108	11.0	79.7	
6	Tie-Rod Nuts	59	6.0	44	R
7	Uni-Trak Rocker Arm Nut	34	3.5	25	R

G: Apply grease.
R: Replacement Parts

Specifications

Item	Standard
Front Fork (Per One Unit)	
Fork Inner Tube Diameter	ϕ41 mm (1.6 in.)
Air Pressure	Atmospheric pressure (Non-adjustable)
Rebound Damper Setting	1 1/4 turns out from the fully clockwise position (Usable range: 0 ←→ 3 turns out)
Fork Spring Preload Setting	6 turns in from the fully counterclockwise position (Usable range: 0 ←→ 15 turns in)
Fork Oil:	
Recommend Oil	SHOWA SS-8 or equivalent
Amount:	
When Changing Oil	Approx. 365 mL (12.3 US oz.)
After Disassembly and Completely Dry	430 ±2.5 mL (14.5 ±0.085 US oz.)
Fork Oil Level	100 ±2 mm (3.94 ±0.08 in.) (Fully compressed, without fork spring, below from the top of the outer tube)
Fork Spring Free Length	267 mm (10.5 in.) [Service Limit: 255 mm (10.0 in.)]
Rear Shock Absorber	
Rebound Damper Setting	1 2/4 turns out from the fully clockwise position (Usable range: 0 ←→ 3 turns out)
Spring Preload Setting Position:	
Standard	Spring length: 190.5 mm (7.50 in.)
Usable Range	Spring length: 185.5 ~ 195.5 mm (7.30 ~ 7.70 in.) (stronger to weaker)
Gas Pressure	980 kPa (10 kgf/cm², 142 psi, Non-adjustable)

Special Tools

Inside Circlip Pliers:
57001-143

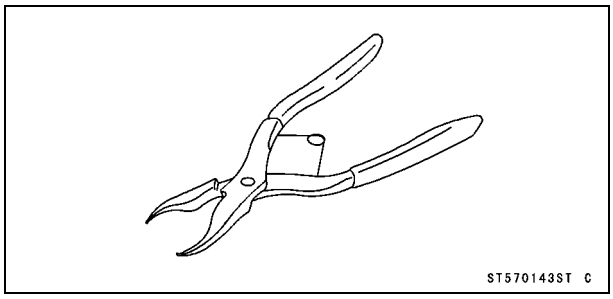

Oil Seal & Bearing Remover:
57001-1058

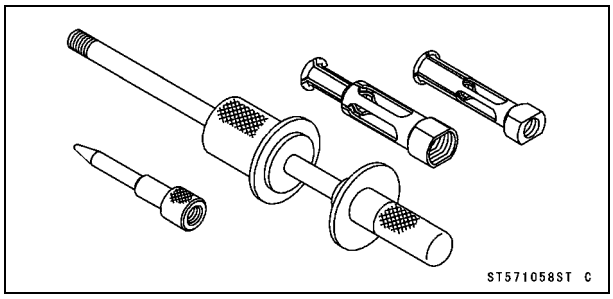

Bearing Driver Set:
57001-1129

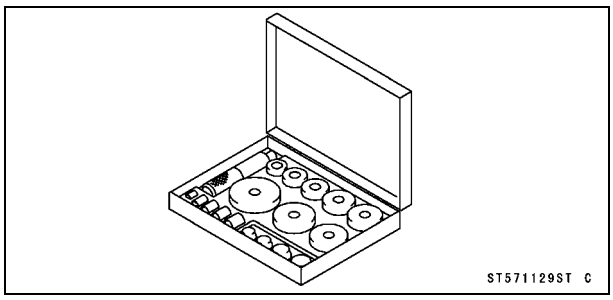

Jack:
57001-1238

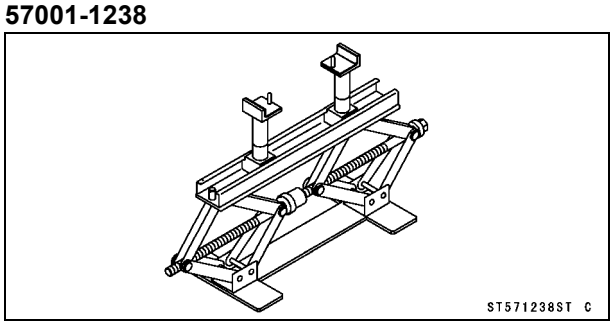

Fork Oil Seal Driver, ϕ41:
57001-1288

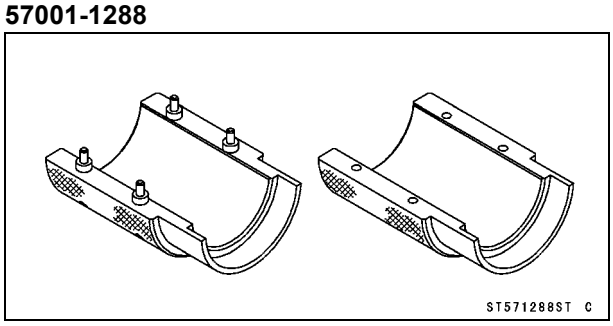

Fork Oil Level Gauge:
57001-1290

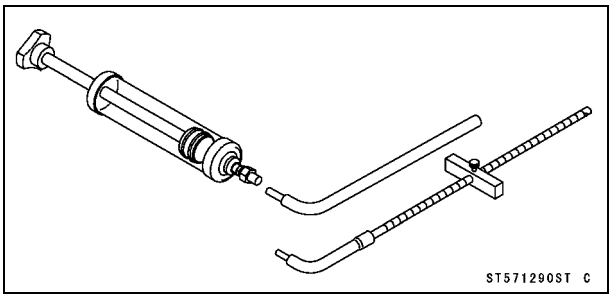

Bearing Remover Head, ϕ20 × ϕ22:
57001-1293

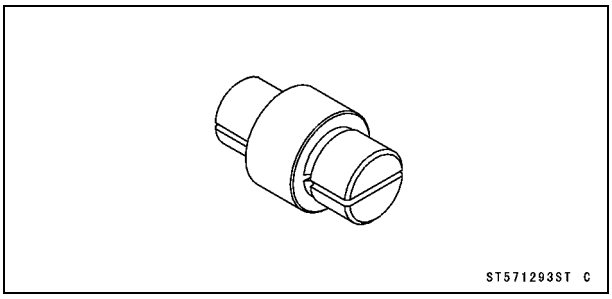

Fork Piston Rod Puller, M10 × 1.0:
57001-1298

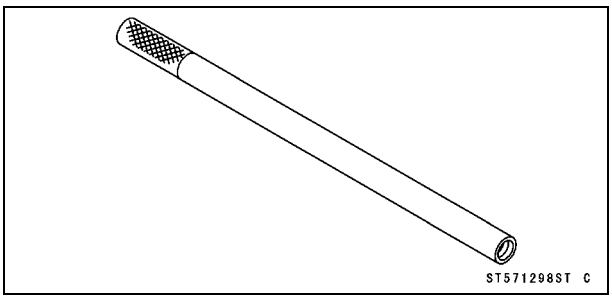

Fork Spring Stopper:
57001-1374

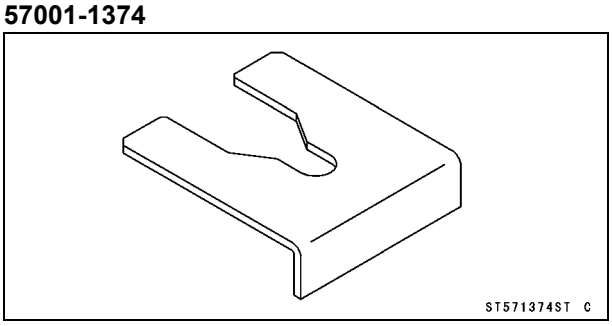

Bearing Remover Shaft, ϕ13:
57001-1377

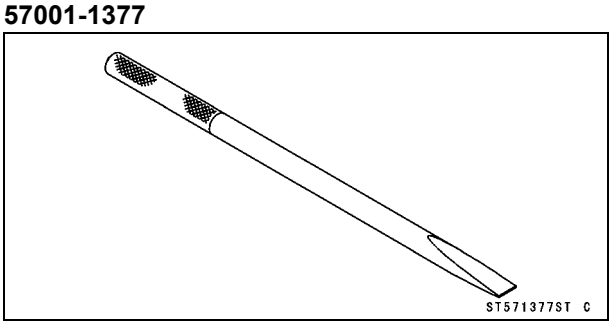

Special Tools

Hook Wrench T=3.2 R37:
57001-1539

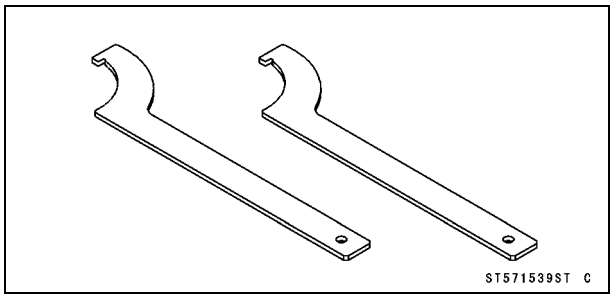

Fork Spring Compressor:
57001-1587

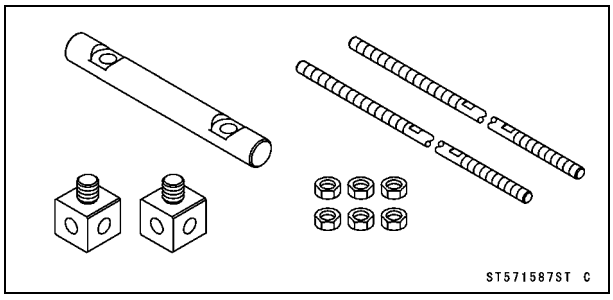

Swingarm Pivot Nut Wrench:
57001-1597

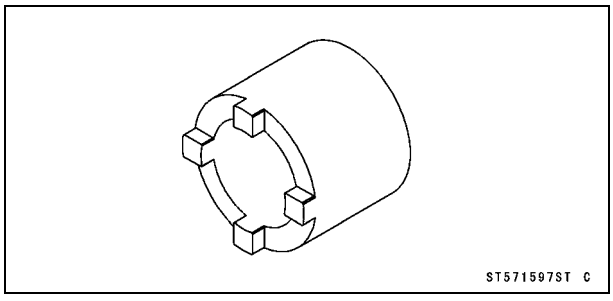

Jack Attachment:
57001-1608

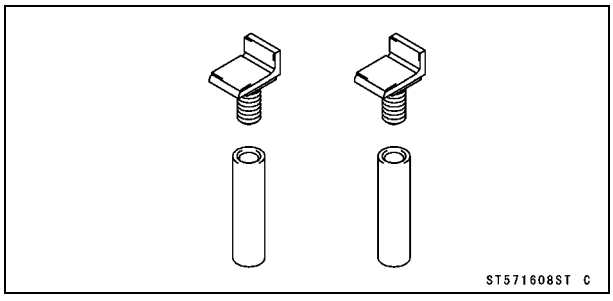

Needle Bearing Driver, ϕ17/ϕ18:
57001-1609

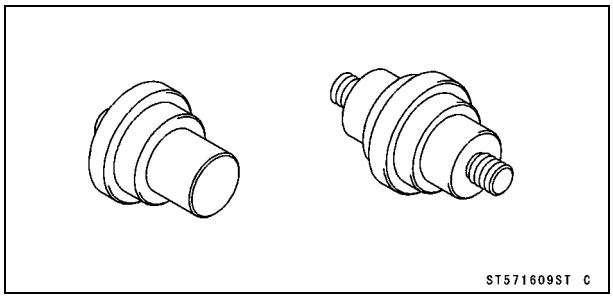

Needle Bearing Driver, ϕ28:
57001-1610

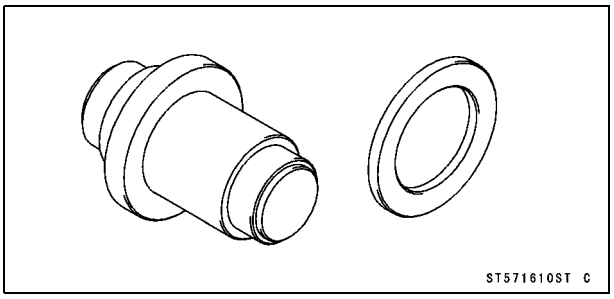

Spacerϕ28:
57001-1663

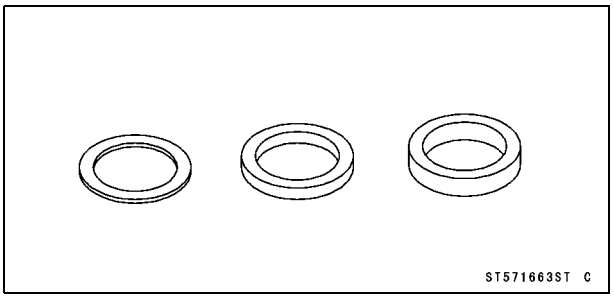

Clamp:
57001-1693

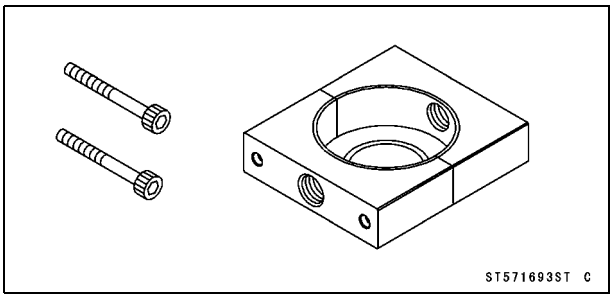

Bar:
57001-1751

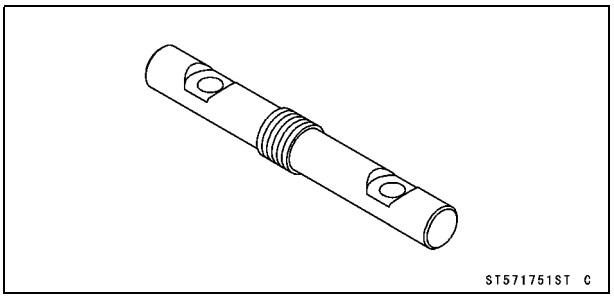

Front Fork

Rebound Damping Force Adjustment

- To adjust the rebound damping force, turn the rebound damping adjuster [A].

○The standard adjuster setting is the **1 1/4 turns out** from the fully clockwise position.

⚠ WARNING

If both adjusters are not adjusted equally, handling may be impaired and a hazardous condition may result. Be sure the adjusters are set equally.

○The damping force can be left soft for average riding. But it should be adjusted harder for high speed riding or riding with a passenger. If the damping feels too soft or too stiff, adjust it in accordance with the following table.

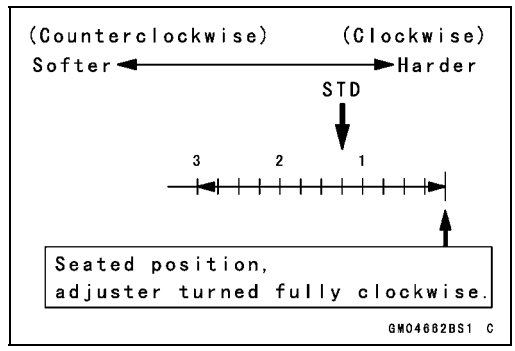

Rebound Damping Force Adjustment

Adjuster Position	Damping Force	Setting	Load	Road	Speed
3 turns out	Weak	Soft	Light	Good	Low
↑	↑	↑	↑	↑	↑
↓	↓	↓	↓	↓	↓
0	Strong	Hard	Heavy	Bad	High

Spring Preload Adjustment

- Turn the spring preload adjuster [A] to change spring preload setting.

○The standard adjuster setting is the **6 turns in** from the fully counterclockwise position.

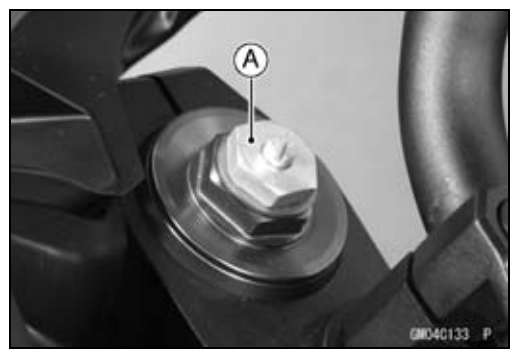

⚠ WARNING

If both adjusters are not adjusted equally, handling may be impaired and a hazardous condition may result. Be sure the adjusters are set equally.

○The spring preload can be left soft for average riding. But it should be adjusted harder for high speed riding or riding with a passenger. If the spring action feels too soft or too stiff, adjust it in accordance with the following table.

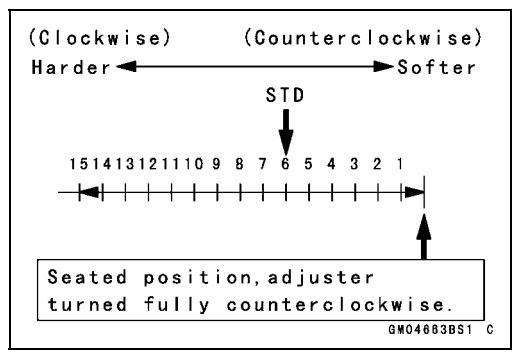

Spring Action

Adjuster Position	Damping Force	Setting	Load	Road	Speed
0	Weak	Soft	Light	Good	Low
↑	↑	↑	↑	↑	↑
↓	↓	↓	↓	↓	↓
15 turns in	Strong	Hard	Heavy	Bad	High

Front Fork

Front Fork Removal (Each Fork Leg)

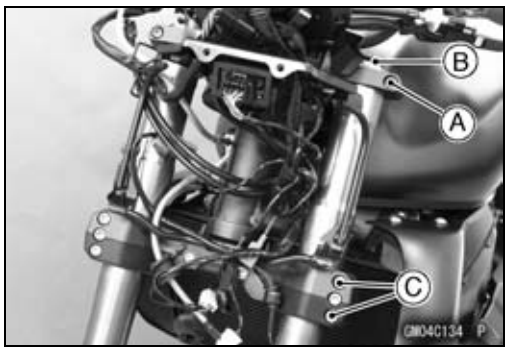

- Remove:
  Upper Fairing (see Upper Fairing Removal in the Frame chapter)
  Front Fender (see Front Fender Removal in the Frame chapter)
  Front Wheel (see Front Wheel Removal in the Wheels/Tires chapter)

★Loosen the upper front fork clamp bolt [A] and fork top plug [B] beforehand if the fork leg is to be disassembled.

NOTE

○*Loosen the top plug after loosening the upper front fork clamp bolt.*

- Loosen the lower front fork clamp bolts (upper, lower) [C].
- With a twisting motion, work the fork leg down and out.

Front Fork Installation

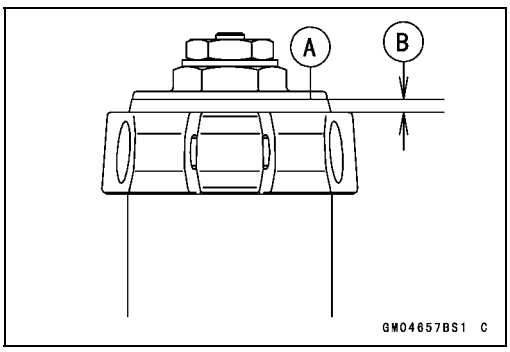

- Install the fork so that the top end [A] of the outer tube as shown in the figure.
  3 mm (0.35 in.) [B]
- Tighten:

Torque - Lower Front Fork Clamp Bolts (Upper, Lower): 25 N·m (2.5 kgf·m, 18 ft·lb)
Front Fork Top Plugs: 34 N·m (3.5 kgf·m, 25 ft·lb)
Upper Front Fork Clamp Bolts: 20 N·m (2.0 kgf·m, 15 ft·lb)

NOTE

○*Tighten the top plug before tightening the upper front fork clamp bolt.*
○*Tighten the two lower front fork clamp bolts (upper, lower) alternately two times to ensure even tightening torque.*
○*The lower front fork clamp bolts (middle) is dummy.*

- Install the removed parts (see appropriate chapters).
- Adjust:
  Spring Preload (see Spring Preload Adjustment)
  Rebound Damping Force (see Rebound Damping Force Adjustment)

Fork Oil Change

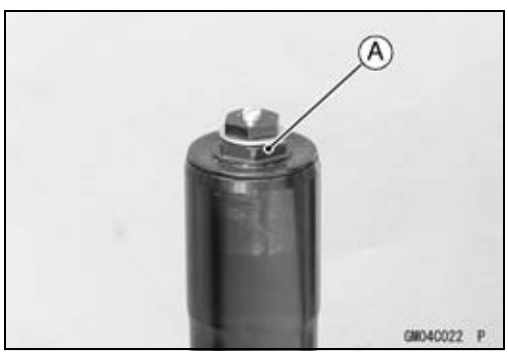

- Remove the front fork (see Front Fork Removal).
- Unscrew the top plug [A] out of the outer tube.

Front Fork

- Holding the top plug [A] with a wrench [B], tighten the spring preload adjuster [C].

NOTE

○*After tightening, lift the top plug to make the space.*

- Slide down the damper [D].

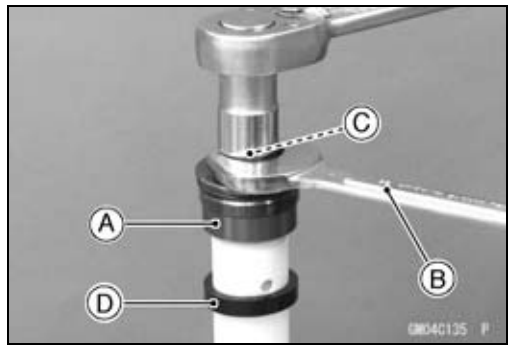

- Install the clamps [A] as shown in the figure.

NOTE

○*Set the cutout [B] of the clamp to the groove [C] of collar [D], pull up the outer tube [E] to hold it by the clamps, and then tighten the two bolts [F]. The outer tube is used as a guide.*

Special Tools - Fork Spring Compressor: 57001-1587
Clamp: 57001-1693

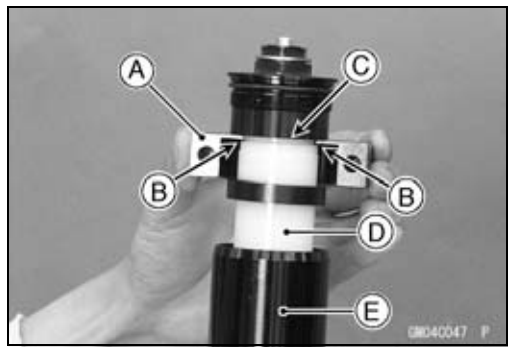

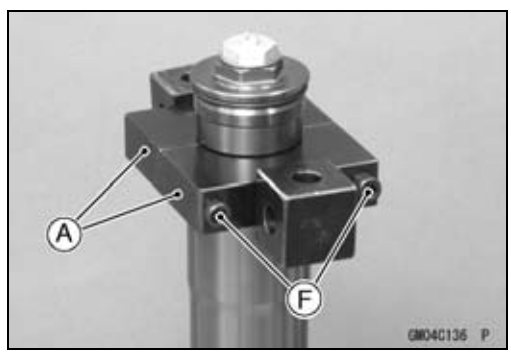

- Insert the holder bar [A] into the axle hole of the front fork [B].

Special Tool - Bar: 57001-1751 (For Left Fork Leg)

○Position the bar left and right and evenly.

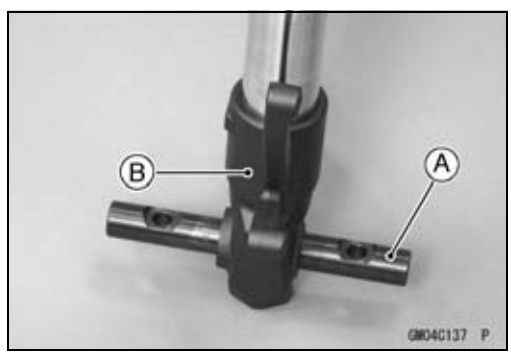

- Insert the compression shaft and install the nut.
- Insert the lower end of the compression shaft [A] into the hole [B] of the holder bar.

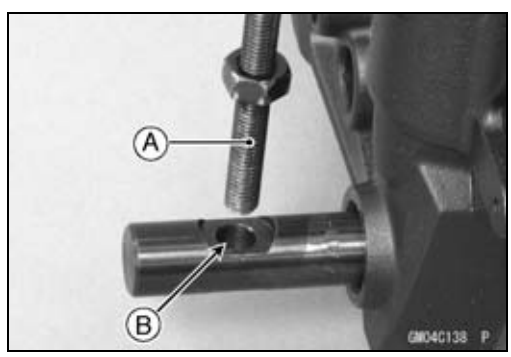

Front Fork

- Screw the adjust nut [A] onto the compression shaft as shown in the figure.
- Screw the locknut [B].
  About 20 mm (0.79 in.) [C]
- Set the other side compression shaft same process.

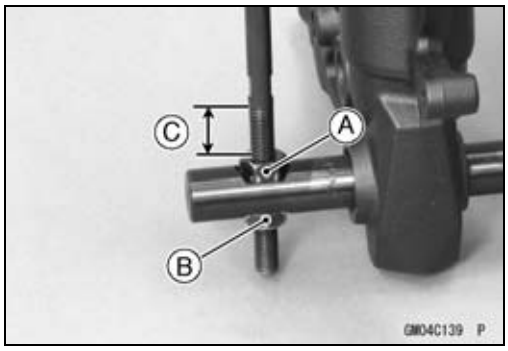

- Set the holder bar [A] and compression shafts [B].

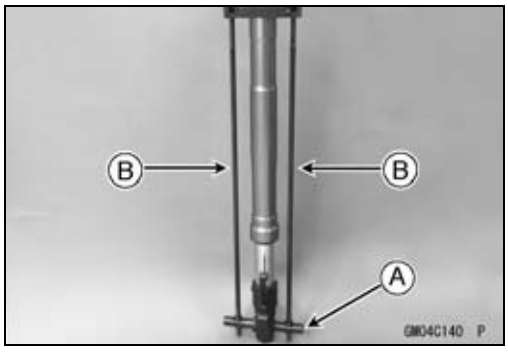

- Screw in the nuts [A] until the piston rod nut comes out.

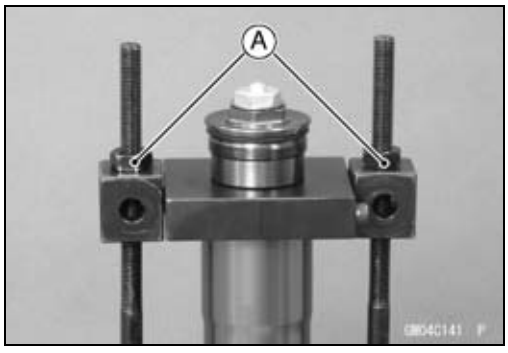

- While holding up the top plug [A], insert the fork spring stopper [B] between the piston rod nut [C] and the slider.
  Special Tool - Fork Spring Stopper: 57001-1374

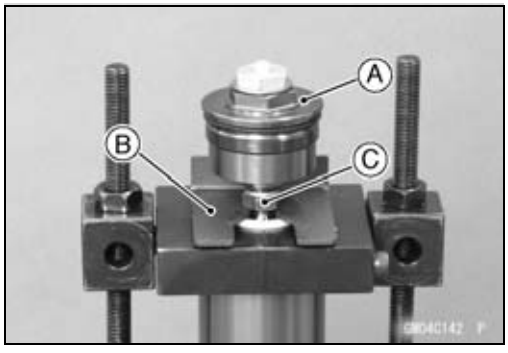

- Holding the spring preload adjuster [A] with a wrench [B], loosen the piston rod nut [C].

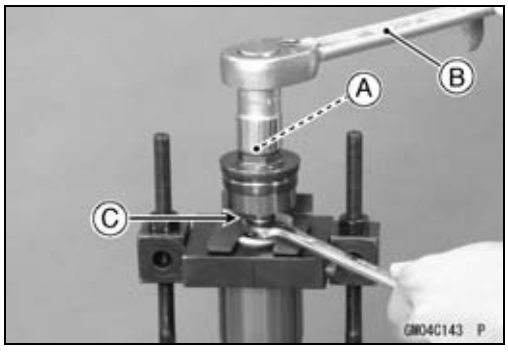

Front Fork

● Remove:
Top Plug with the Rebound Damping Adjuster Rod Damper [A]
Slider [B]
Collar [C]
Fork Spring [D]

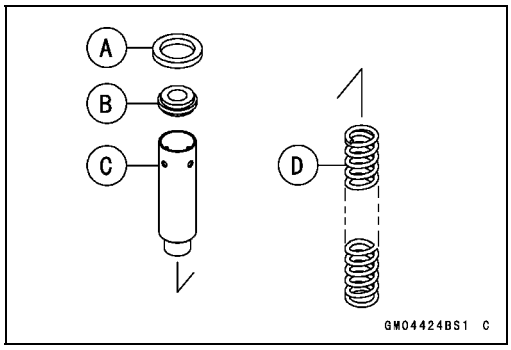

● Drain the fork oil into a suitable container.
○Pump the piston rod [A] up and down at least ten times to expel the oil from the fork.

Special Tool - Fork Piston Rod Puller, M10 × 1.0 [B]: 57001 -1298

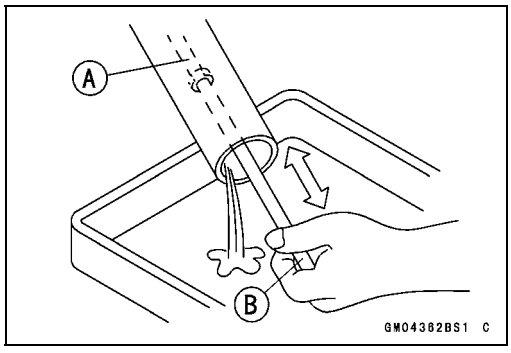

● Hold the fork tube upright, press the outer tube [A] and the piston rod all the way down.
● Pour in the type and amount of fork oil specified.

Fork Oil
Recommended Oli:
SHOWA SS-8 or equivalent
Amount (Per Side):
When changing oil:
Approx. 365 mL (12.3 US oz.)
After disassembly and completely dry:
430 ±2.5 mL (14.5 ±0.085 US oz.)

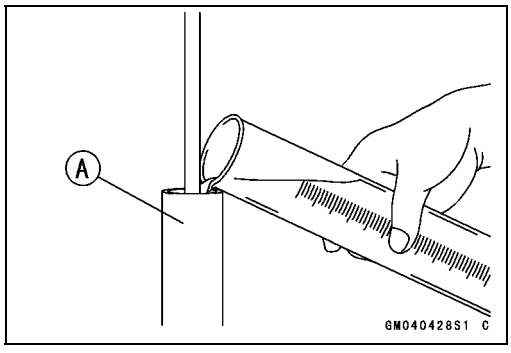

★If necessary, measure the oil level as follows.
○Hold the inner tube vertically in a vise.
○Using the piston rod puller [A], move the piston rod [B] up and down more than ten times in order to expel all the air from the fork oil.

Special Tool - Fork Piston Rod Puller, M10 × 1.0: 57001 -1298

○Remove the piston rod puller.
○Wait until the oil level settles.
○With the fork fully compressed and the piston rod fully pushed in, insert a tape measure or rod into the inner tube, and measure the distance from the top of the outer tube to the oil.

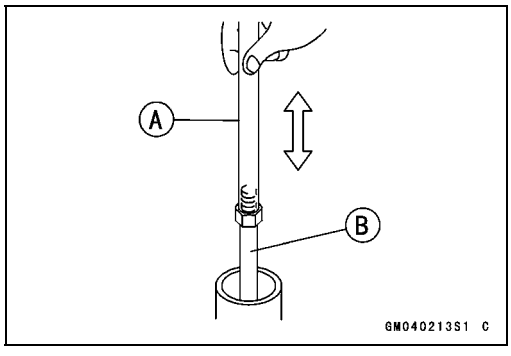

Oil Level (fully compressed, without fork spring)
Standard:

100 ±2 mm (3.94 ±0.08 in.) (from the top of the outer tube)

NOTE

○*Fork oil level may also be measured using the fork oil level gauge.*

Special Tool - Fork Oil Level Gauge [A]: 57001-1290

○With the fork fully compressed and without fork spring, insert the gauge tube into the inner tube [B] and position the stopper across the top end [C] of the outer tube [D].
○Set the gauge stopper [E] so that its lower side shows the oil level distance specified [F].
○Pull the handle slowly to pump out the excess oil until the oil no longer comes out.
★If no oil is pumped out, there is insufficient oil in the inner tube. Pour in enough oil, then pump out the excess oil as shown above.

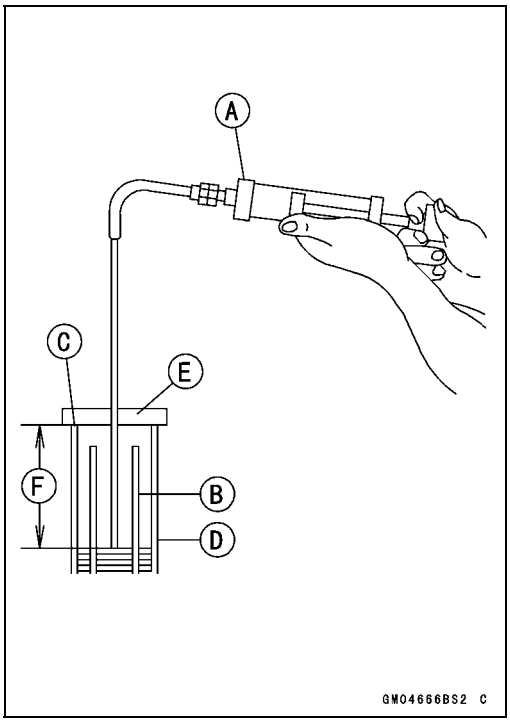

● Screw on the rod nut [A] fully to the piston rod [B].

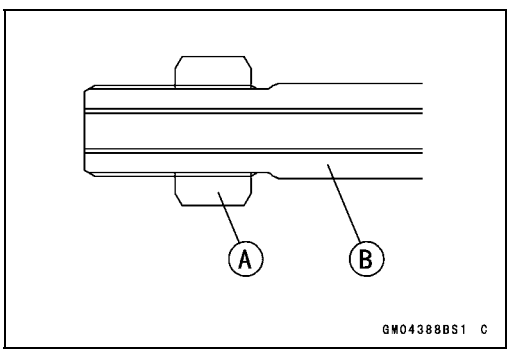

● Screw the fork piston rod puller onto the end of the piston rod.

Special Tool - Fork Piston Rod Puller, M10 × 1.0: 57001 -1298

● Pull the puller up above the outer tube top.
● Install the fork spring [A] with the smaller end [B] facing upward.

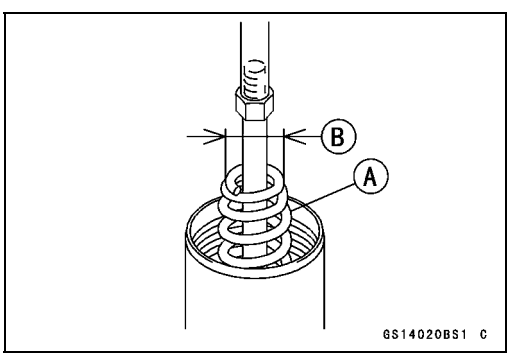

● Install:
Collar [A]
Damper [B]
Slider [C]

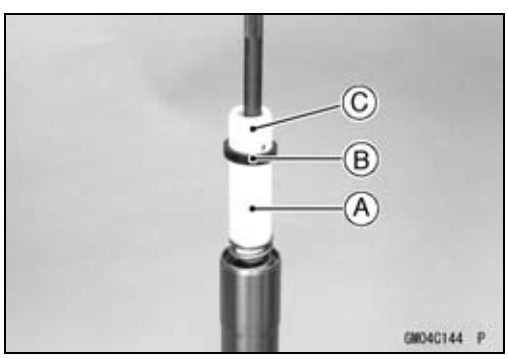

Front Fork

- Check the distance between the upper end [A] of the spring preload adjuster [B] and rebound damping adjuster [C] with a pair of vernier caliper.
  1.5 mm (0.059 in.) [D]

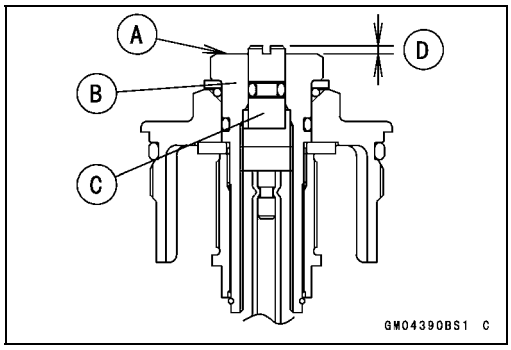

- Set the fork spring compressor on the slider [A] using the outer tube as a guide.

  Special Tools - Fork Spring Compressor: 57001-1587
  Clamp: 57001-1693

NOTE

○*Set the cutout of the clamp to the slider.*

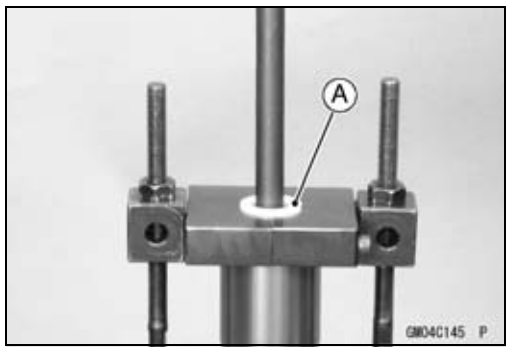

- While holding up the piston rod puller, insert the fork spring stopper [A] between the piston rod nut and the slider.

  Special Tool - Fork Spring Stopper: 57001-1374

- Remove the piston rod puller.
- Insert the rebound damping adjuster rod into the holes of the piston rod.
- Screw in the top plug until it stops onto the piston rod.

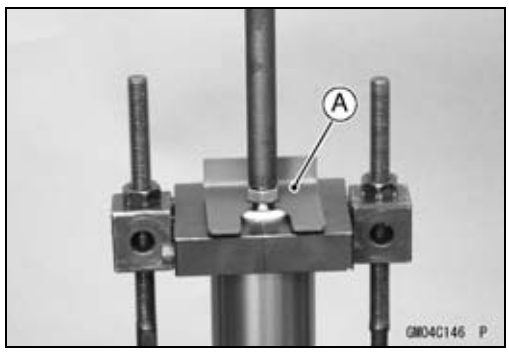

- Replace the O-ring [A] with a new one.
- Apply grease to the new O-ring.
- Holding the spring preload adjuster [B] with a wrench [C], tighten the piston rod nut [D] against the top plug.

  Torque - Piston Rod Nuts: 20 N·m (2.0 kgf·m, 15 ft·lb)

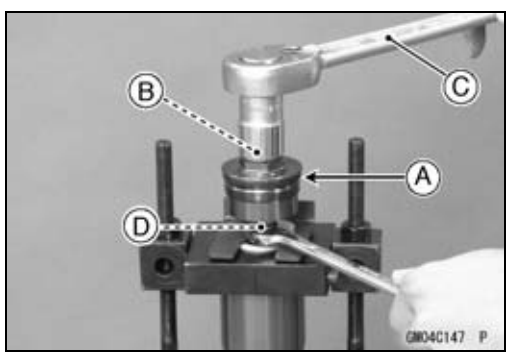

- While holding up the top plug [A], pull out the fork spring stopper [B].
- Remove the fork spring compressor.
- Raise the outer tube and screw the top plug into it.
- Install the front fork (see Front Fork Installation).
- Adjust the spring preload (see Spring Preload Adjustment)

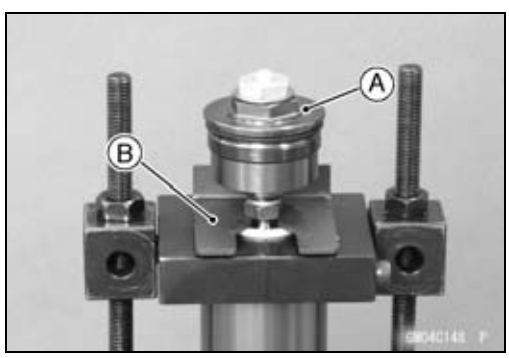

Front Fork

Front Fork Disassembly

- Remove the front fork (see Front Fork Removal).
- Drain the fork oil (see Fork Oil Change).
- Install the suitable pipe (ϕ26 ~ ϕ32) [A] into the cylinder unit.
- Set the fork leg inverted.
- While pushing down [B] the fork leg, loosen the bottom Allen bolt.
- Remove the Allen bolt and gasket.

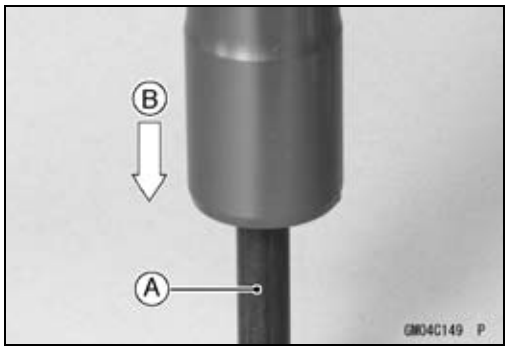

- Take the cylinder unit [A] and center ring plate [B] out of the inner tube.

○Do not disassemble the cylinder unit.

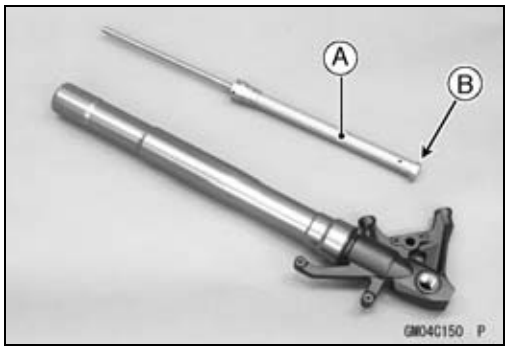

- Separate the inner tube from the outer tube as follows.

○Slide up the dust seal [A].

○Remove the retaining ring [B] from the outer tube.

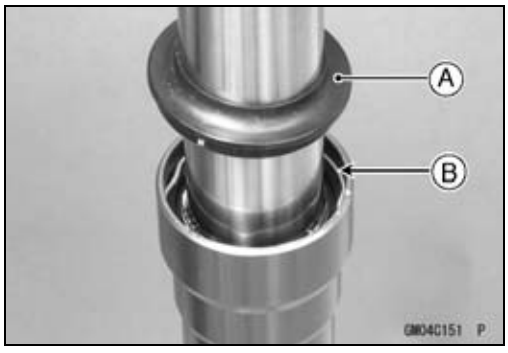

○Holding the outer tube [A] by hand, pull the inner tube [B] several times to pull out the outer tube.

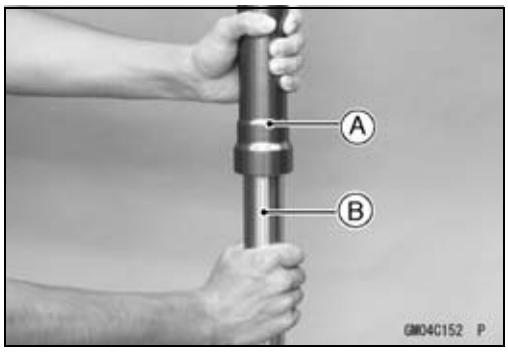

- Remove the inner tube guide bushing [A], outer tube guide bushing [B], washer [C], oil seal [D] from the inner tube.

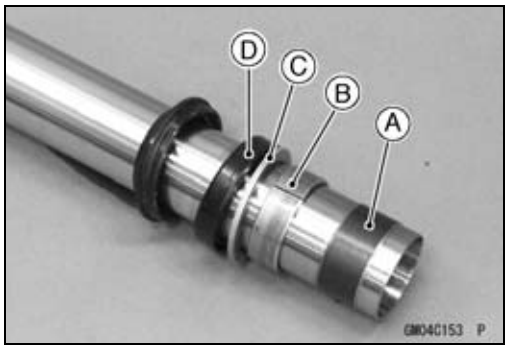

Front Fork

Front Fork Assembly

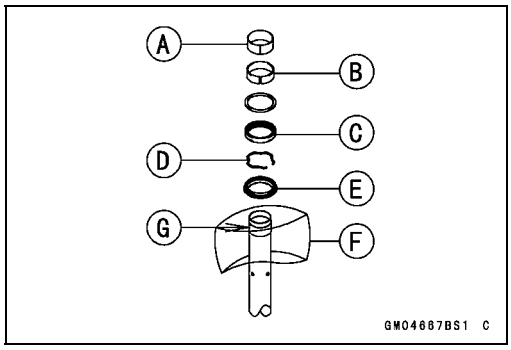

- Replace the following parts with new ones.
  Inner Tube Guide Bushing [A]
  Outer Tube Guide Bushing [B]
  Oil Seal [C]
  Retaining Ring [D]
  Dust Seal [E]
  Bottom Allen Bolt Gasket
- Place an oil coated plastic bag [F] over the end of the inner tube to protect the oil seals.

○The inner tube bushings groove has a sharp edge [G] that cut out the sealing lip of the seals as they are pushed down over the inner tube.

- Install in order these parts on the inner tube.
- Apply grease to the lip of the oil seal.

- Insert the inner tube to the outer tube.
- Fit the new outer tube guide bushing [A] into the outer tube.

NOTE

○*When assembling the new outer tube guide bushing, hold the washer against the new outer tube guide bushing and tap the washer with the fork oil seal driver [B] until it stops.*

Special Tool - Fork Oil Seal Driver, ϕ41: 57001-1288

- Install the oil seal by using the fork oil seal driver.

Special Tool - Fork Oil Seal Driver, ϕ41: 57001-1288

- Install the retaining ring and dust seal into the outer tube.

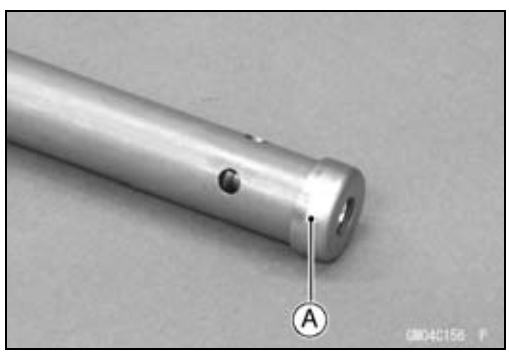

- Install the center ring plate [A] on the cylinder unit.
- Insert the center ring plate and cylinder unit as a set into the inner tube.

- Insert the suitable pipe into the cylinder unit.
- Apply a non-permanent locking agent to the thread of the front fork bottom Allen bolt [A].
- While pushing down [B] the fork leg, tighten the front fork bottom Allen bolt.

Torque - Front Fork Bottom Allen Bolts: 20 N·m (2.0 kgf·m, 15 ft·lb)

- Pour in the specified type of oil (see Fork Oil Change).

Inner Tube, Outer Tube Inspection

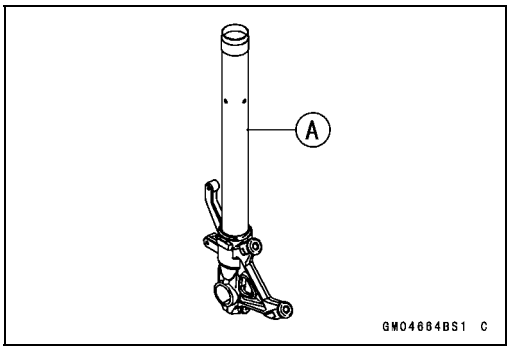

- Visually inspect the inner tube [A], and repair any damage.
- Nick or rust damage can sometimes be repaired by using a wet-stone to remove sharp edges or raised areas which cause seal damage.

★If the damage is not repairable, replace the inner tube. Since damage to the inner tube damages the oil seal, replace the oil seal whenever the inner tube is repaired or replaced.

NOTICE

If the inner tube is badly bent or creased, replace it. Excessive bending, followed by subsequent straightening, can weaken the inner tube.

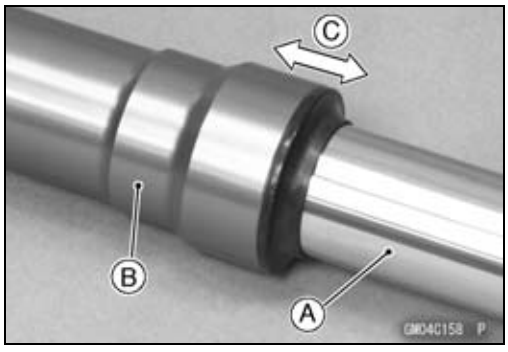

- Temporarily assemble the inner tube [A] and outer tube [B], and pump [C] them back and forth manually to check for smooth operation.

★If you feel binding or catching, the inner and outer tubes must be replaced.

⚠ WARNING

A straightened inner or outer fork tube may fall in use, possibly causing an accident resulting in serious injury or death. Replace a badly bent or damaged inner or outer tube and inspect the other tube carefully before reusing it.

Dust Seal Inspection

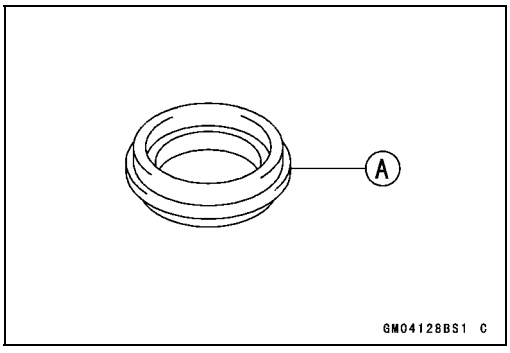

- Inspect the dust seal [A] for any signs of deterioration or damage.

★Replace it if necessary.

Spring Tension Inspection

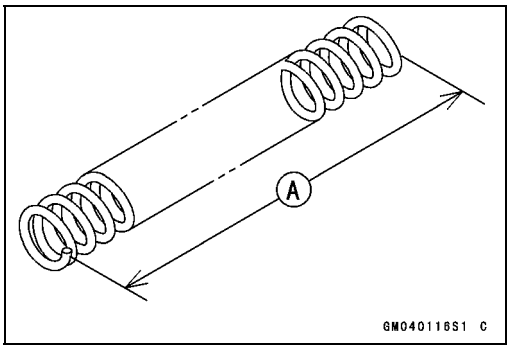

- Since a spring becomes shorter as it weakens, check its free length [A] to determine its condition.

★If the spring of either fork leg is shorter than the service limit, it must be replaced. If the length of a replacement spring and that of the remaining spring vary greatly, the remaining spring should also be replaced in order to keep the fork legs balanced for motorcycle stability.

Spring Free Length

Standard:	**267 mm (10.5 in.)**
Service Limit:	**255 mm (10.0 in.)**

Rear Shock Absorber

Rebound Damping Force Adjustment

- To adjust the rebound damping force, turn the lower damping adjuster [A].

○The standard adjuster setting is the **1 2/4 turns out** from the fully clockwise position.

Rebound Damping Force Adjustment

Adjuster Position	Damping Force	Setting	Load	Road	Speed
3 turns out	Weak	Soft	Light	Good	Low
↑	↑	↑	↑	↑	↑
↓	↓	↓	↓	↓	↓
0	Strong	Hard	Heavy	Bad	High

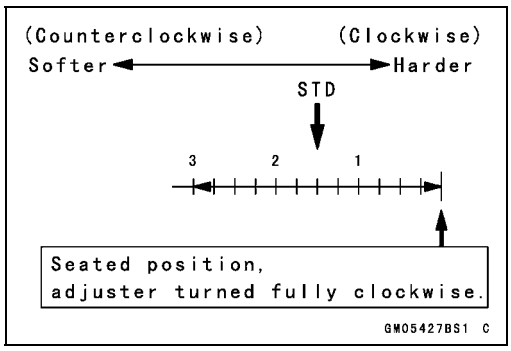

Spring Preload Adjustment

- Remove the rear shock absorber from the frame (see Rear Shock Absorber Removal).
- Loosen the locknut and turn out the adjusting nut to free the spring.

Special Tool - Hook Wrench T = 3.2 R37: 57001-1539

- To adjust the spring preload, turn in the adjusting nut [A] to the desired position and tighten the locknut [B].
  Spring Length [C]

Spring Preload Setting

Standard:	**Spring length 190.5 mm (7.50 in.)**
Usable Range:	**Spring length 185.5 ~ 195.5 mm (7.30 ~ 7.70 in.)**

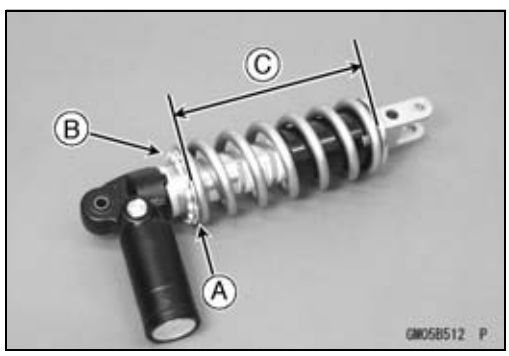

- Remove the bolts [A], left foot guard [B] and chain cover [C] (see Drive Chain Removal in the Final Drive chapter) for turning the hook wrench easily.

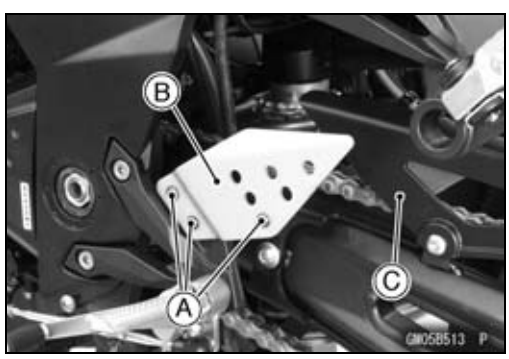

Rear Shock Absorber

- To adjust the spring preload, turn in the adjusting nut to the desired position and tighten the locknut by using hook wrenches [A] with the rear shock absorber attached the frame.

  Special Tool - Hook Wrench T = 3.2 R37: 57001-1539

★If the spring action feels too soft or too stiff, adjust it.

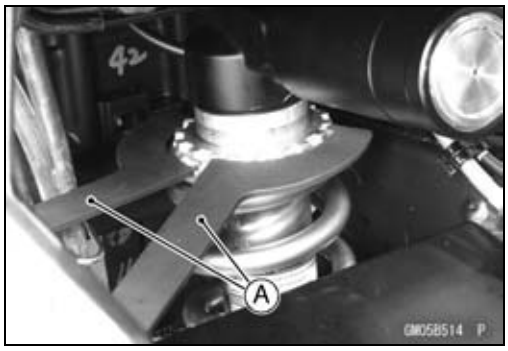

Spring Adjustment

Adjuster Position	Damping Force	Setting	Load	Road	Speed
195.5 mm (7.70 in.)	Weak	Soft	Light	Good	Low
↑	↑	↑	↑	↑	↑
↓	↓	↓	↓	↓	↓
185.5 mm (7.30 in.)	Strong	Hard	Heavy	Bad	High

Rear Shock Absorber Removal

- Raise the rear wheel off the ground with the jack.

  Special Tools - Jack: 57001-1238
  Jack Attachment: 57001-1608

- Squeeze the brake lever slowly and hold it with a band [A].

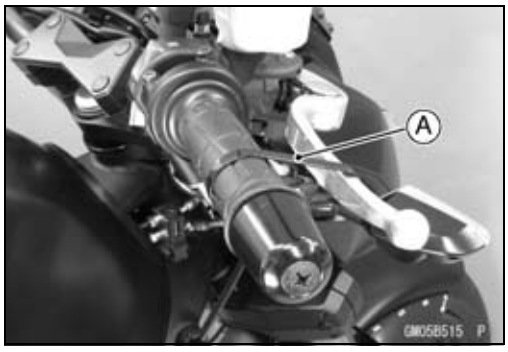

⚠ WARNING

Be sure to hold the front brake when removing the shock absorber, or the motorcycle may fall over. It could cause an accident and injury.

- Remove:
  Frame Covers (see Frame Cover Removal in the Frame chapter)
  Lower Shock Absorber Nut and Bolt [A]
  Lower Tie-Rod Nut and Bolt [B]

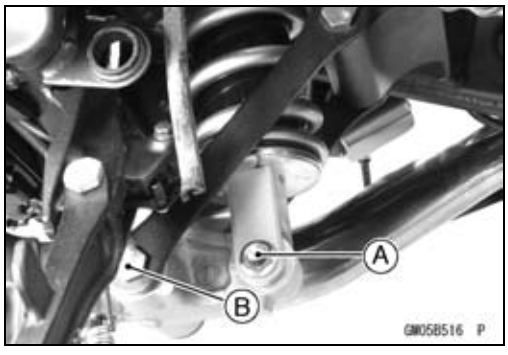

- Disconnect the regulator/rectifier lead connector [A].
- Remove the upper shock absorber nut and bolt [B].
- Remove the shock absorber [C] from downside.

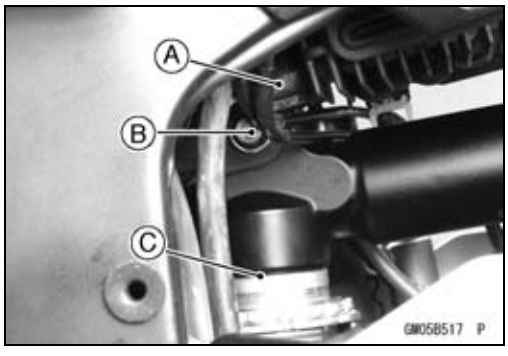

Rear Shock Absorber

Rear Shock Absorber Installation

- Replace the rear shock absorber nuts (Upper and Lower) with new ones.
- Tighten:

Torque - Rear Shock Absorber Nuts (Upper and Lower): 34 N·m (3.5 kgf·m, 25 ft·lb)
Tie-Rod Nuts: 59 N·m (6.0 kgf·m, 44 ft·lb)

Rear Shock Absorber Inspection

- Remove the rear shock absorber (see Rear Shock Absorber Removal).
- Visually inspect the following items.
  Smooth Stroke
  Oil Leakage
  Crack or Dent

★If there is any damage to the rear shock absorber, replace it.

- Visually inspect the rubber bushing.

★If it show any signs of damage, replace it.

Swingarm

Swingarm Removal

- Remove:
  Frame Covers (see Frame Cover Removal in the Frame chapter)
  Chain Cover (see Drive Chain Removal in the Final Drive chapter)
  Rear Wheel (see Rear Wheel Removal in the Wheels/Tires chapter)

- Remove:
  Bolt [A]
  Clamps [B] [C]

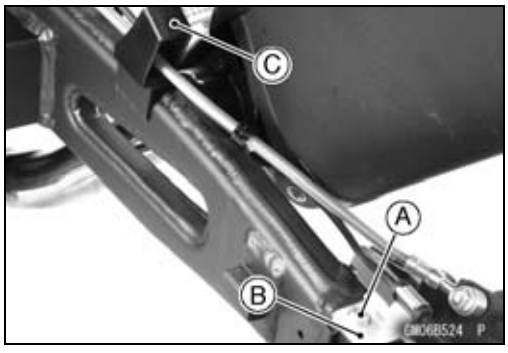

- Raise the rear wheel off the ground with jack.

  Special Tools - Jack: 57001-1238
  Jack Attachment: 57001-1608

- Remove:
  Lower Shock Absorber Nut and Bolt [A]
  Upper Tie-Rod Nut and Bolt [B]

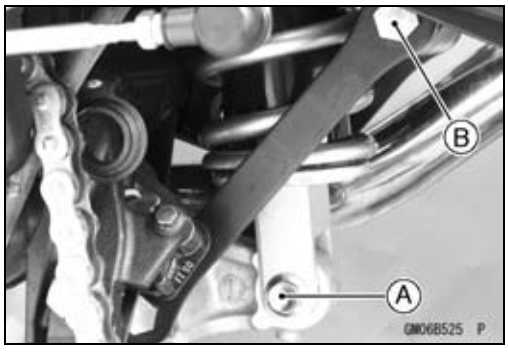

- Unscrew the swingarm pivot shaft locknut [A], using the nut wrench [B].

  Special Tool - Swingarm Pivot Nut Wrench: 57001-1597

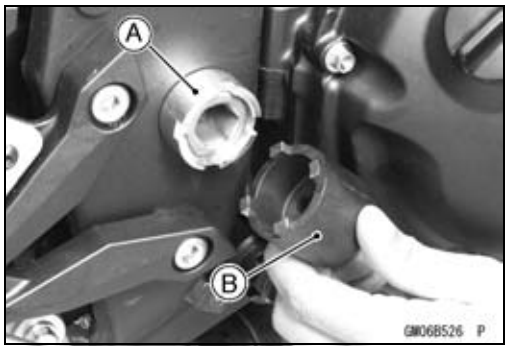

Swingarm

- Unscrew the swingarm pivot shaft nut [A] and the swingarm pivot shaft [B].
- Pull out the pivot shaft and remove the swingarm.

Swingarm Installation

- Replace the following parts with a new one.
  Lower Shock Absorber Nut
  Upper Tie-Rod Nut
- Place the collar [A] on the stopper [B] inside the frame [C].
- Insert the pivot shaft into the frame from the right side.
- Tighten the pivot shaft so that the clearance [D] between the collar and the frame come to 0 mm.
  Right Side [E]
- Loosen the pivot shaft once, and tighten the pivot shaft securely.

  Torque - Swingarm Pivot Shaft: 9.8 N·m (1.0 kgf·m, 87 in·lb)
- Tighten the pivot shaft locknut, using the nut wrench.

  Special Tool - Swingarm Pivot Nut Wrench: 57001-1597

  Torque - Swingarm Pivot Shaft Locknut: 98 N·m (10 kgf·m, 72 ft·lb)
- Tighten:

  Torque - Swingarm Pivot Shaft Nut: 108 N·m (11.0 kgf·m, 79.7 ft·lb)
- Install the removed parts (see appropriate chapters).

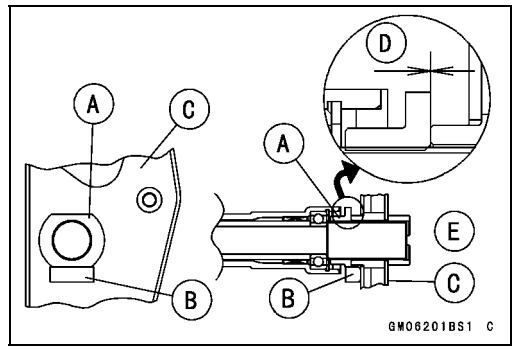

Swingarm

Swingarm Bearing Removal

- Remove:
  Swingarm (see Swingarm Removal)
  Collar [A]
  Oil Seals [B]
  Sleeve [C]
  Circlip [D] (Right Side)

  Special Tool - Inside Circlip Pliers: 57001-143

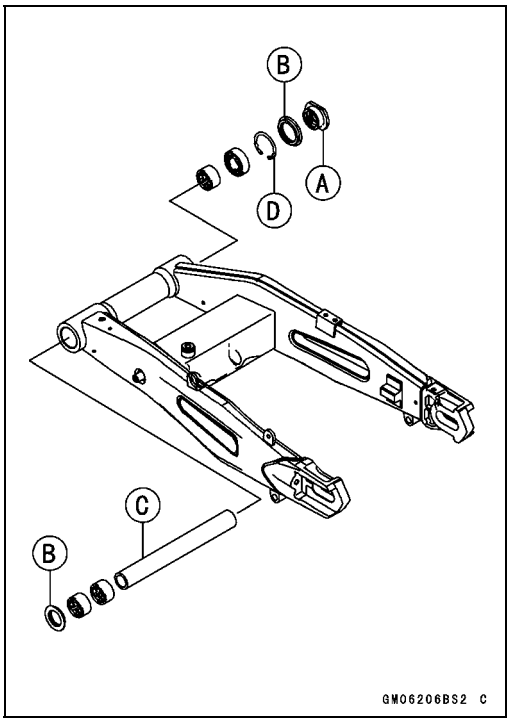

- Remove the ball bearing and needle bearings.

  Special Tool - Oil Seal & Bearing Remover [A]: 57001-1058

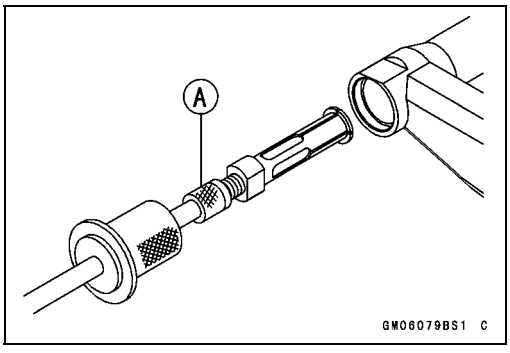

Swingarm Bearing Installation

- Replace the ball and needle bearings [A] with new ones.
- Install the ball and needle bearings so that the manufacturer's marks face out.

  Special Tools - Bearing Driver Set: 57001-1129
  Needle Bearing Driver, ϕ28 [B]: 57001-1610
  Spacerϕ28: 57001-1663

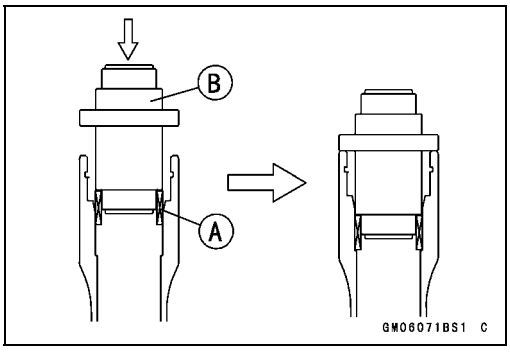

Swingarm

- Install the needle bearings [A], ball bearing [B] and oil seals [C] position as shown in the figure.
  Circlip [D]
  23.5 mm (0.93 in.) [E]
  17 mm (0.67 in.) [F]
  24 mm (0.94 in.) [G]
  6 mm (0.24 in.) [H]

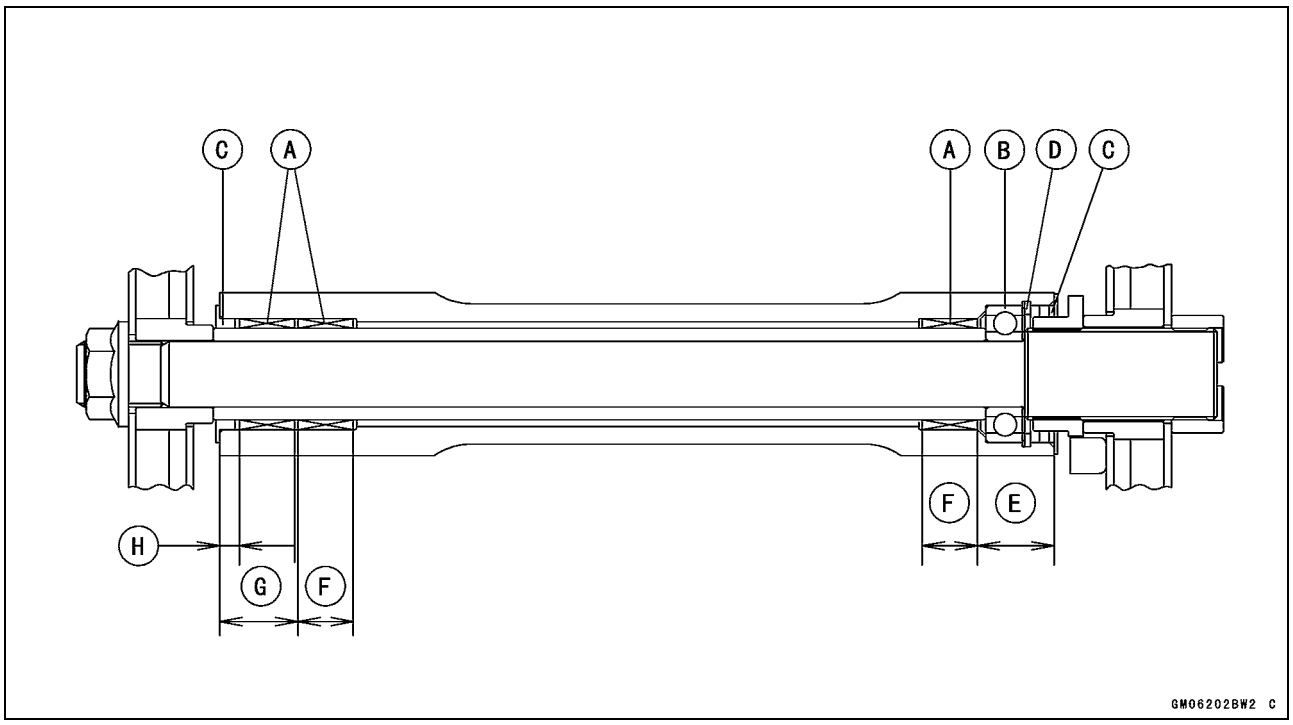

Swingarm Bearing, Sleeve Inspection

NOTICE

Do not remove the bearings for inspection. Removal may damage them.

- Inspect the needle bearings [A] and ball bearing installed in the swingarm.

○The rollers and ball in a bearing normally wear very little, and wear is difficult to measure. Instead of measuring, visually inspect the bearing for abrasion, discoloration, or other damage.

★If the needle bearing and sleeve [B] show any sings of abnormal wear, discoloration, or damage, replace them as a set.

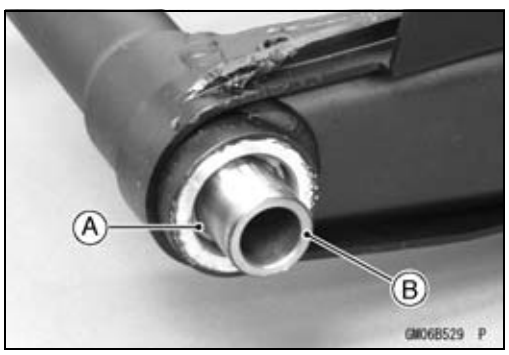

Swingarm

- Turn the bearing in the swingarm back and forth [A] while checking for plays, roughness, or binding.

★If bearing play, roughness, or binding is found, replace the bearing.

- Examine the bearing seal [B] for tears or leakage.

★If the seal is torn or is leaking, replace the bearing.

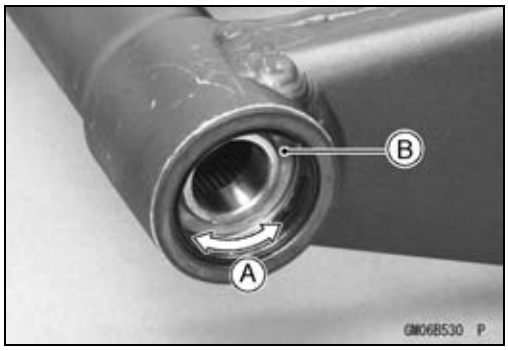

Swingarm Bearing Lubrication

NOTE

○*Since the bearings are packed with grease and sealed, lubrication is not required.*

Chain Guide Inspection

- Refer to the Chain Guide Wear Inspection in the Periodic Maintenance chapter.

Tie-Rod, Rocker Arm

Tie-Rod Removal

- Squeeze the brake lever slowly and hold it with a band [A].

- Raise the rear wheel off the ground with the jack.

  Special Tools - Jack: 57001-1238
  Jack Attachment: 57001-1608

- Remove:
  Upper Tie-Rod Nut and Bolt [A]
  Lower Tie-Rod Nut and Bolt [B]
  Tie-Rods [C]

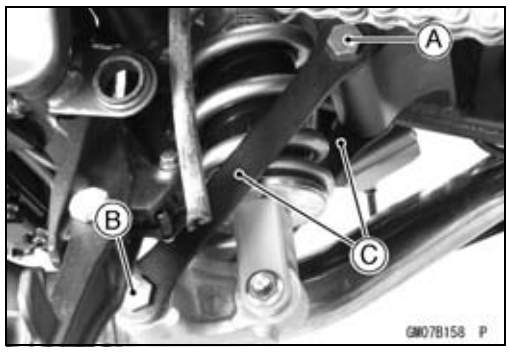

Tie-Rod Installation

- Apply grease to the inside of the oil seals.
- Install the tie-rods so that the marked side faces [A] outside.
- Replace the tie-rod nuts with new ones.
- Tighten:

  Torque - Tie-Rod Nuts: 59 N·m (6.0 kgf·m, 44 ft·lb)

Rocker Arm Removal

- Squeeze the brake lever slowly and hold it with a band.
- Remove the sidestand [A] (see Sidestand Removal in the Frame chapter).
- Raise the rear wheel off the ground with the jack.

  Special Tools - Jack: 57001-1238
  Jack Attachment: 57001-1608

- Remove:
  Lower Rear Shock Absorber Nut and Bolt [B]
  Lower Tie-Rod Nut and Bolt [C]
  Rocker Arm Nut and Bolt [D]
  Rocker Arm [E]

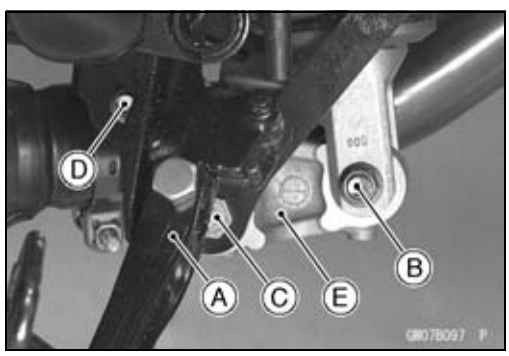

Rocker Arm Installation

- Apply grease to the inside of the oil seals.
- Replace the uni-track rocker arm nut with a new one.
- Tighten:

  Torque - Uni-Trak Rocker Arm Nut: 34 N·m (3.5 kgf·m, 25 ft·lb)
  Tie-Rod Nuts: 59 N·m (6.0 kgf·m, 44 ft·lb)
  Rear Shock Absorber Nut (Lower): 34 N·m (3.5 kgf·m, 25 ft·lb)

- Install the removed parts (see appropriate chapters).

Tie-Rod, Rocker Arm

Tie-Rod and Rocker Arm Bearing Removal

- Remove:
  Tie-Rods (see Tie-Rod Removal)
  Rocker Arm (see Rocker Arm Removal)
  Sleeves [A]
  Oil Seals [B]
  Swingarm [C] (see Swingarm Removal)
- Remove the needle bearings [D], using the bearing remover head and bearing remover shaft.

Special Tools - Bearing Remover Head, ϕ20 × ϕ22: 57001-1293
Bearing Remover Shaft, ϕ13: 57001-1377

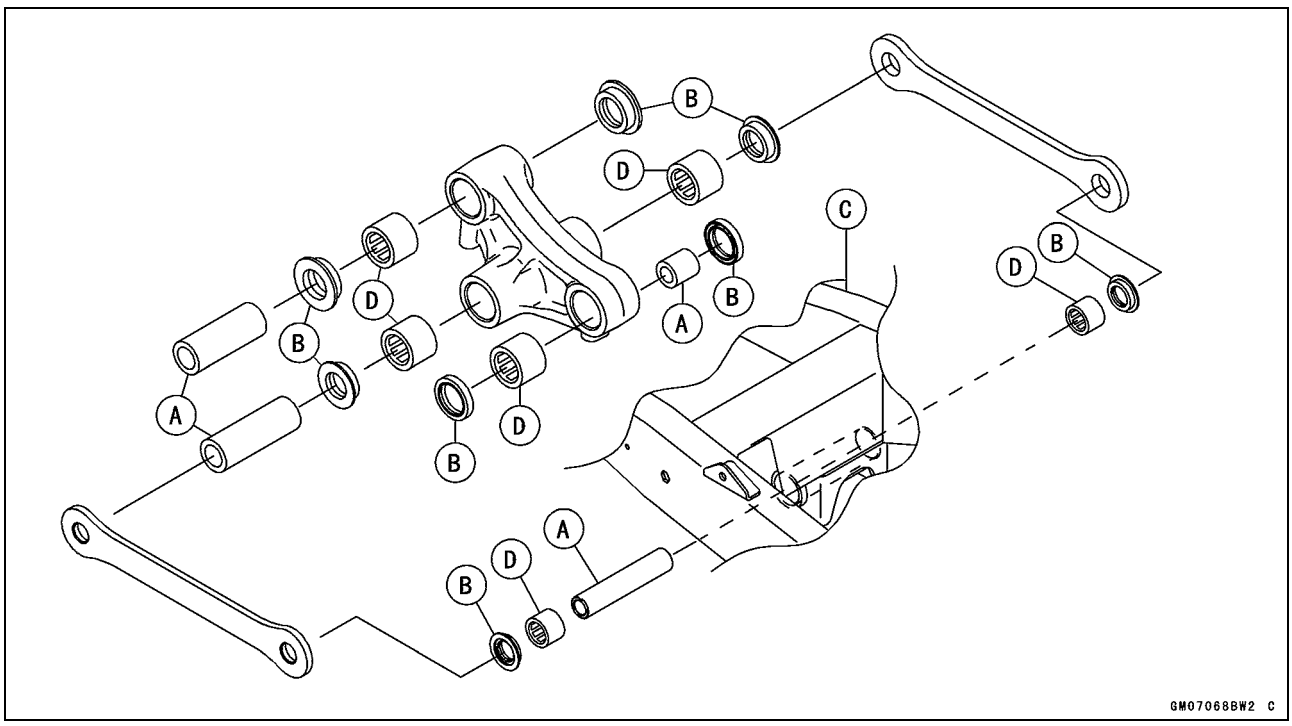

Tie-Rod and Rocker Arm Bearing Installation

- Replace the needle bearings and oil seals with new ones.
- Apply plenty of grease to the lips of the oil seals.
- Install the needle bearings and oil seals position as shown in the figure.

○Screw the needle bearing driver [A] into the driver holder [B].
○Insert the needle bearing driver into the needle bearing [C] and press the needle bearing into the housing until the driver contacts the end surface of the housing.
Bearing Pressing Depth: 5.5 mm (0.22 in.) [D]
5.0 mm (0.20 in.) [E]

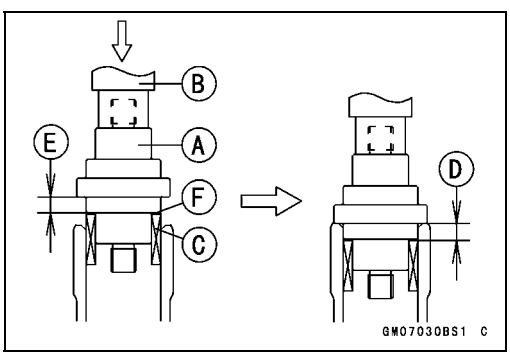

NOTE

○For a bearing of inner diameter ϕ18, select the pressing side of the needle bearing driver according to its pressing depth.

Special Tools - Bearing Driver Set: 57001-1129
Needle Bearing Driver, ϕ17/ϕ18: 57001-1609
Spacer, ϕ18 [F]: 57001-1636

Tie-Rod, Rocker Arm

NOTE

○*Install the needle bearings so that the marked side faces in.*

Needle Bearings [A]
Oil Seals [B]
Front [C]
Right Side [D]
Left Side [E]
Rear Shock Absorber [F]
Tie-Rods [G]
Rocker Arm [H]
7.5 mm (0.30 in.) [I]
5.0 mm (0.20 in.) [J]
5.5 mm (0.22 in.) [K]

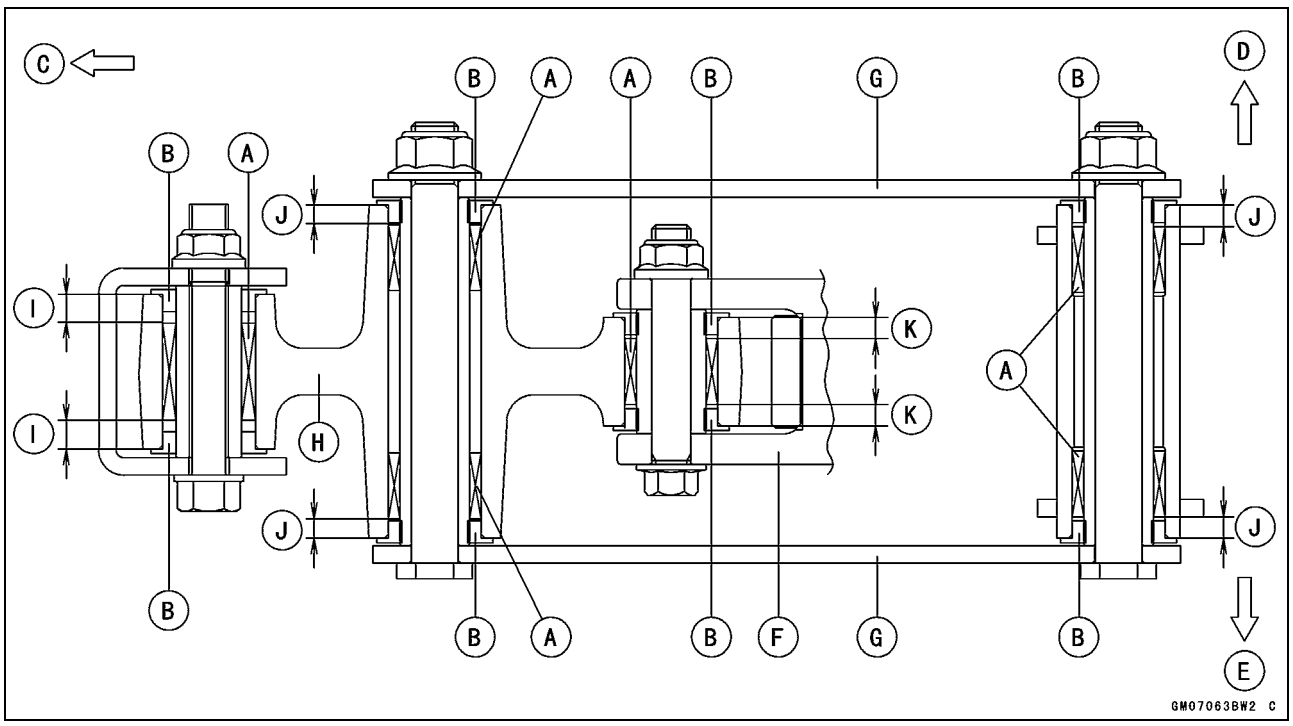

Rocker Arm/Tie-Rod Bearing, Sleeve Inspection

NOTICE

Do not remove the bearings for inspection. Removal may damage them.

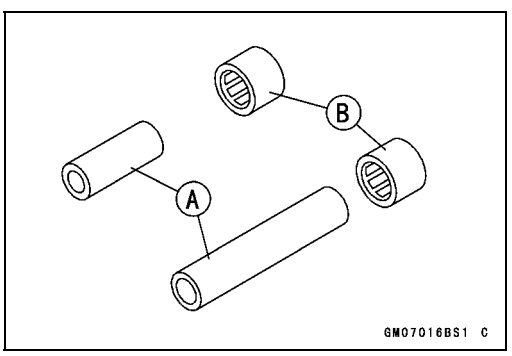

- Visually inspect the rocker arm, or tie-rod sleeves [A] and needle bearings [B].
- The rollers in a needle bearing normally wear very little, and wear is difficult to measure. Instead of measuring, inspect the bearing for abrasion, color change, or other damage.

★If there is any doubt as to the condition of any of the needle bearings or sleeve, replace the sleeve and needle bearings as a set.

Rocker Arm/Tie-Rod Bearing Lubrication

NOTE

○*Since the bearings are packed with grease, lubrication is not required.*

Steering

Table of Contents

Exploded View 14-2
Special Tools 14-4
Steering 14-5
    Steering Inspection 14-5
    Steering Adjustment 14-5
Steering Stem 14-6
    Stem, Stem Bearing Removal 14-6
    Stem, Stem Bearing Installation 14-7
    Steering Stem Bearing Lubrication 14-8
    Steering Stem Warp Inspection 14-9
    Stem Cap Deterioration, Damage Inspection 14-9
Handlebar 14-10
    Handlebar Removal 14-10
    Handlebar Installation 14-10

Exploded View

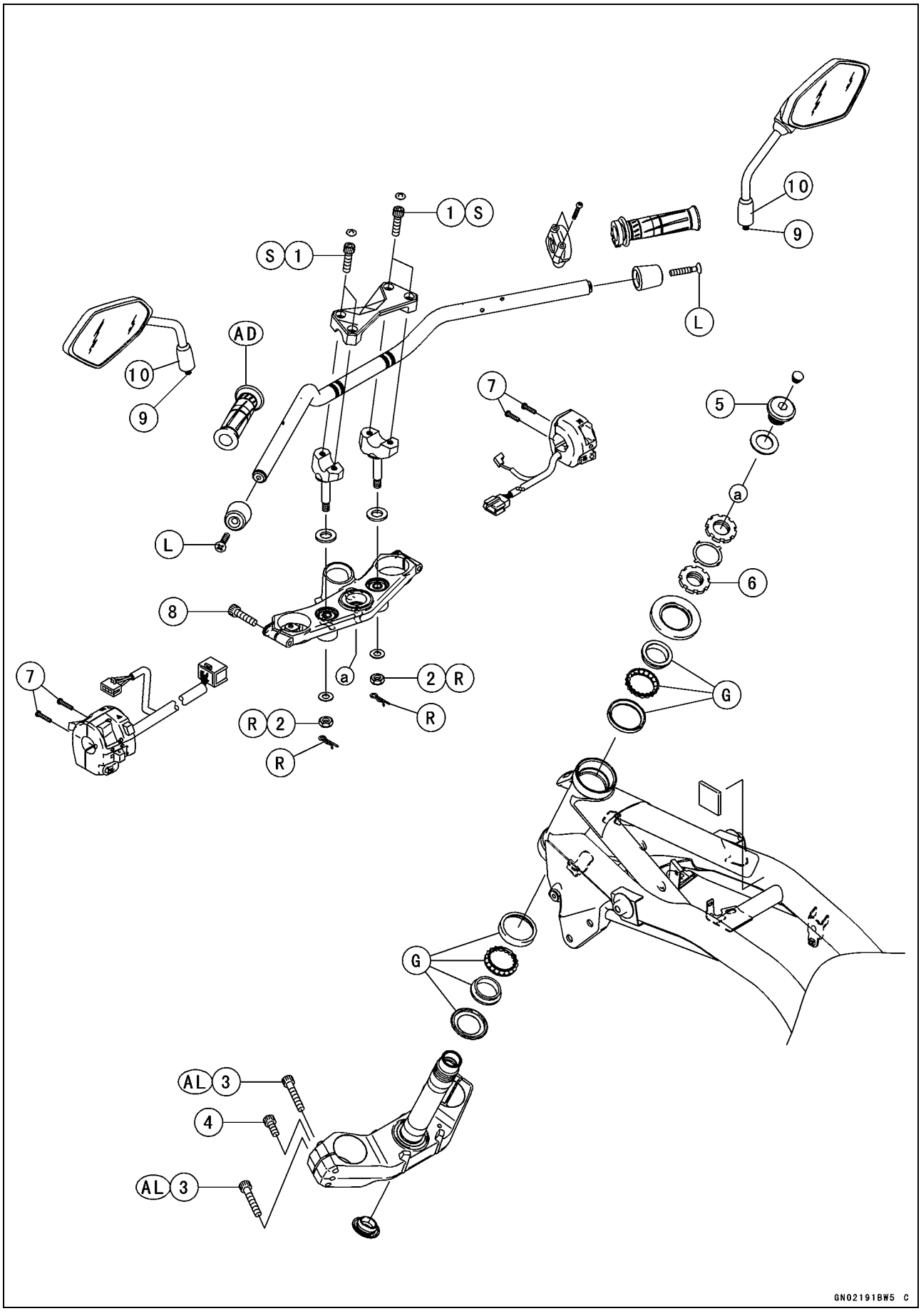

Exploded View

No.	Fastener	Torque			Remarks
		N·m	kgf·m	ft·lb	
1	Handlebar Holder Bolts	25	2.5	18	S
2	Handlebar Lower Holder Nuts	34	3.5	25	R
3	Lower Front Fork Clamp Bolts (Upper, Lower)	25	2.5	18	AL
4	Lower Front Fork Clamp Bolts (Middle)	17.5	18	13	
5	Steering Stem Head Bolt	108	11.0	79.7	
6	Steering Stem Nut	27	2.8	20	
7	Switch Housing Screws	3.5	0.36	31 in·lb	
8	Upper Front Fork Clamp Bolts	20	2.0	15	
9	Rear View Mirror (Lower Hexagonal Area)	30	3.1	22	
10	Rear View Mirror (Upper Hexagonal Area)	18	1.8	13	

AD: Apply adhesive.
AL: Tighten the two clamp bolts alternately two times to ensure even tighten torque.
G: Apply grease.
L: Apply a non-permanent locking agent.
R: Replacement Parts
S: Follow the specified tightening sequence.

Special Tools

Head Pipe Outer Race Press Shaft:
57001-1075

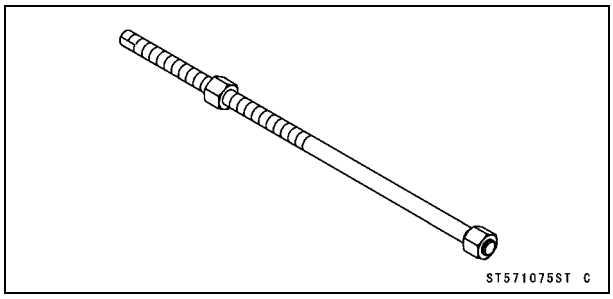

Steering Stem Nut Wrench:
57001-1100

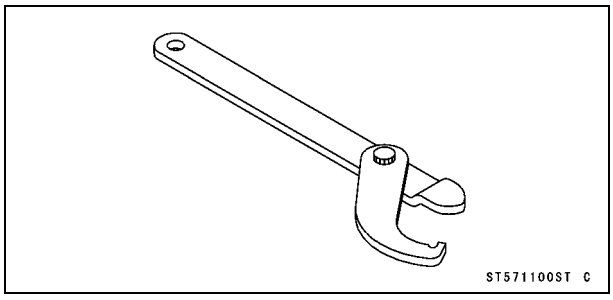

Bearing Driver Set:
57001-1129

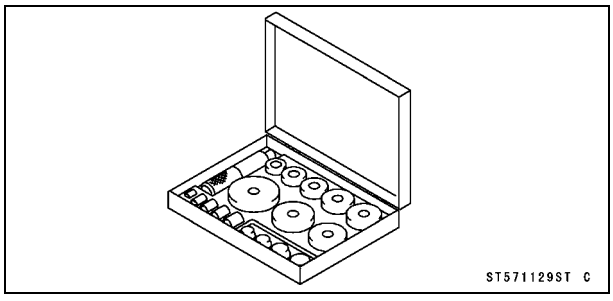

Steering Stem Bearing Driver, ϕ42.5:
57001-1344

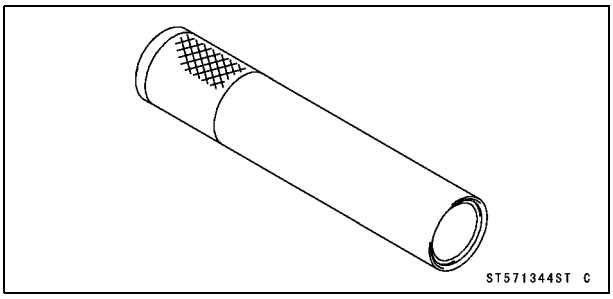

Steering Stem Bearing Driver Adapter, ϕ41.5:
57001-1345

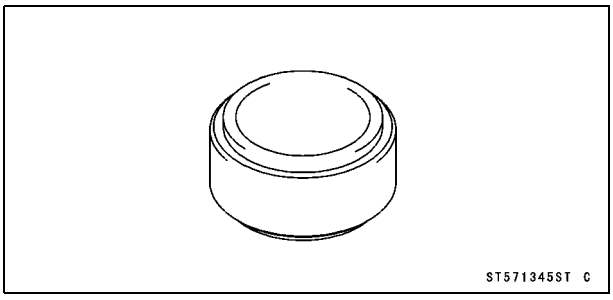

Head Pipe Outer Race Driver, ϕ55:
57001-1446

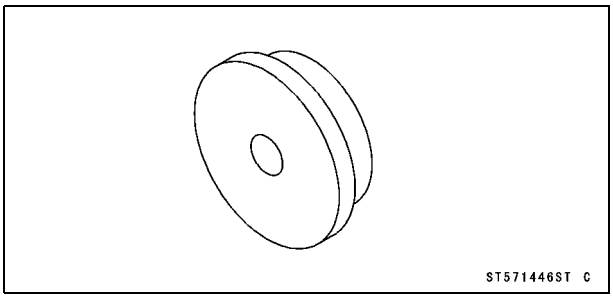

Steering

Steering Inspection

- Refer to the Steering Play Inspection in the Periodic Maintenance chapter.

Steering Adjustment

- Refer to the Steering Play Adjustment in the Periodic Maintenance chapter.

Steering Stem

Stem, Stem Bearing Removal

- Remove:
  Upper Fairing (see Upper Fairing Removal in the Frame chapter)
  Inner Cover (see Inner Cover Removal in the Frame chapter)
  Upper Fairing Bracket (see Upper Fairing Bracket Removal in the Frame chapter)
  Front Wheel (see Front Wheel Removal in the Wheels/Tires chapter)
  Handlebar (see Handlebar Removal)
  Front Forks (see Front Fork Removal in the Suspension chapter)
  Steering Stem Head (see Steering Play Adjustment in the Periodic Maintenance chapter)

- Bend the claws [A] of claw washer straighten.
- Remove the steering stem locknut [B].

  Special Tool - Steering Stem Nut Wrench: 57001-1100
- Remove the claw washer.

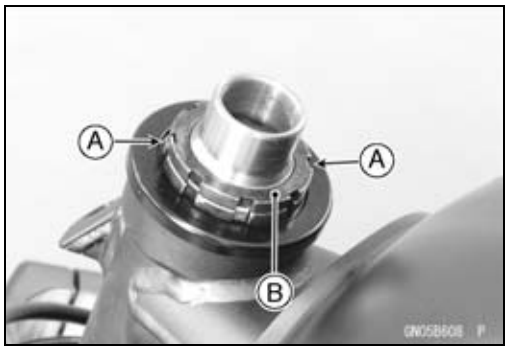

- Pushing up the stem base, and remove the steering stem nut [A] with stem cap [B].

  Special Tool - Steering Stem Nut Wrench [C]: 57001-1100
- Remove:
  Steering Stem [D]
  Upper Ball Bearing Inner Race and Ball Bearing

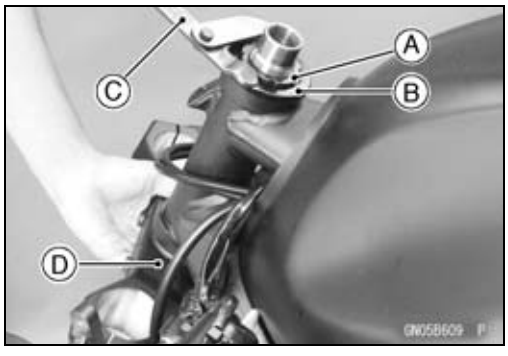

- To remove the ball bearing outer races [A] pressed into the head pipe [B], insert a bar [C] into the recesses of head pipe, and applying it to both recess alternately hammer it to drive the race out.

NOTE

○*If either steering stem bearing is damaged, it is recommended that both the upper and lower bearings (including outer races) should be replaced with new ones.*

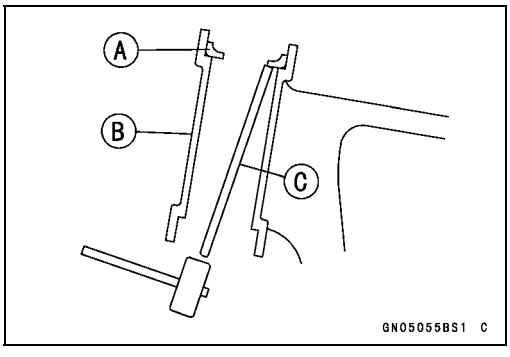

Steering Stem

- Remove the lower ball bearing inner race (with its oil seal) [A] which is pressed onto the steering stem with a suitable commercially available chisel [B].

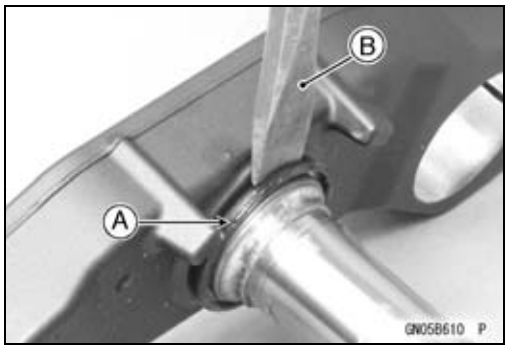

Stem, Stem Bearing Installation

- Replace the bearing outer races with new ones.
- Apply grease to the outer races.
- Drive them into the head pipe at the same time.

Special Tools - Head Pipe Outer Race Press Shaft [A]: 57001-1075
Bearing Driver Set: 57001-1129
Head Pipe Outer Race Driver, ϕ55 [B]: 57001-1446

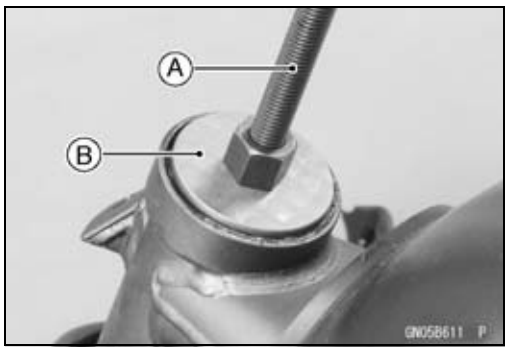

- Replace the bearing inner races and oil seal with new ones.
- Apply grease to the oil seal.
- Install the oil seal [A] on the steering stem, and drive the lower ball bearing inner race [B] applied the grease onto the stem.

Special Tools - Steering Stem Bearing Driver, ϕ42.5 [C]: 57001-1344
Steering Stem Bearing Driver Adapter, ϕ41.5 [D]: 57001-1345

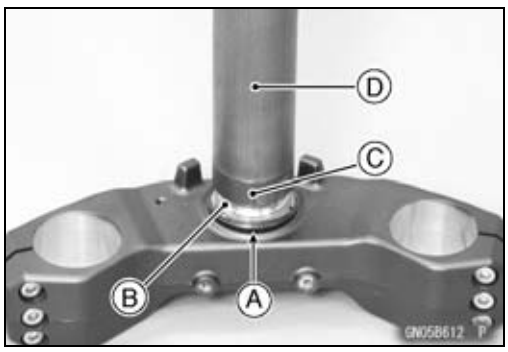

- Install the lower ball bearing [A] onto the stem.
- Grease the following.
  Inner and Outer Races
  Lower and Upper Ball Bearings

○The lower and upper ball bearings are identical.

- Install the stem [A] through the head pipe and install the ball bearing [B] and inner race [C] on it.
- Install:
  Stem Cap [D]
  Steering Stem Nut [E]

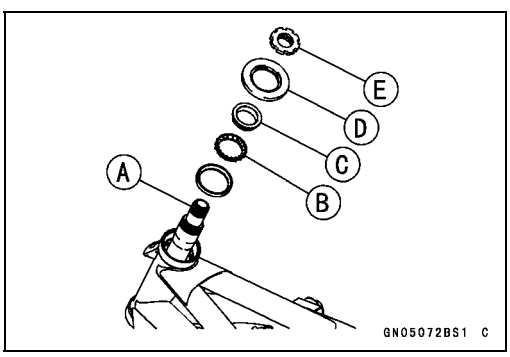

Steering Stem

- Settle the bearings in place as follows.

○Tighten the steering stem nut with **55 N·m (5.6 kgf·m, 41 ft·lb)** of torque first, and loosen it a fraction of a turn until it turns lightly. Afterward tighten it again with specified torque using a steering stem nut wrench [A].

Special Tool - Steering Stem Nut Wrench: 57001-1100

Torque - Steering Stem Nut: 27 N·m (2.8 kgf·m, 20 ft·lb)

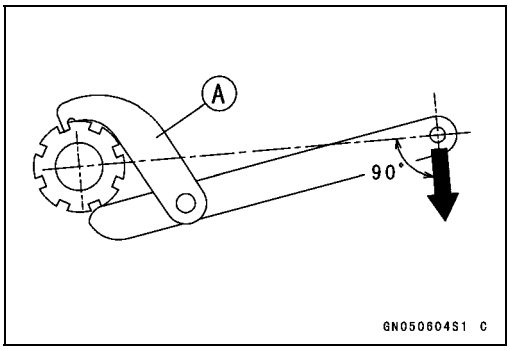

- Install the claw washer [A] so that its bent side [B] faces upward, and engage the bent claws with the grooves of stem locknut [C].
- Hand tighten the stem locknut until it touches the claw washer.
- Tighten the stem locknut clockwise until the claws are aligned with the grooves (ranging from 2nd to 4th) of stem nut [D], and bend the 2 claws downward [E].
- Install the stem head.
- Install the washer, and temporary tighten the steering stem head bolt.
- Install the front forks (see Front Fork Installation in the Suspension chapter).

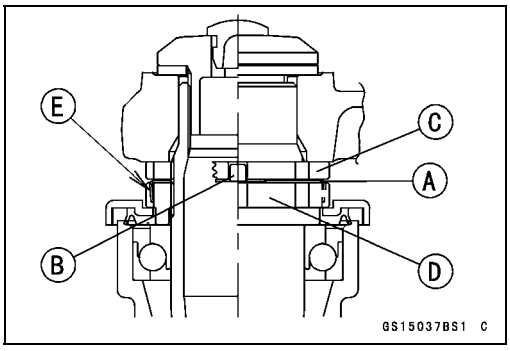

NOTE

○*Tighten the upper front fork clamp bolts first, next the stem head bolt, last the lower front fork clamp bolts.*

○*Tighten the two lower front fork clamp bolts (upper, lower) alternately two times to ensure even tightening torque.*

Torque - Upper Front Fork Clamp Bolts: 20 N·m (2.0 kgf·m, 15 ft·lb)
Steering Stem Head Bolt: 108 N·m (11.0 kgf·m, 80 ft·lb)
Lower Front Fork Clamp Bolts (Upper, Lower): 25 N·m (2.5 kgf·m, 18 ft·lb)

⚠ WARNING

If the handlebar does not turn to the steering stop it may cause an accident resulting in injury or death. Be sure the cables, harnesses and hoses are routed properly and do not interfere with handlebar movement (see Cable, Wire, and Hose Routing section in the Appendix chapter).

- Install the removed parts (see appropriate chapters).

Steering Stem Bearing Lubrication

- Refer to the Steering Stem Bearing Lubrication in the Periodic Maintenance chapter.

Steering Stem

Steering Stem Warp Inspection

- Whenever the steering stem is removed, or if the steering can not be adjusted for smooth action, check the steering stem for straightness.

★If the steering stem [A] is bent, replace the steering stem.

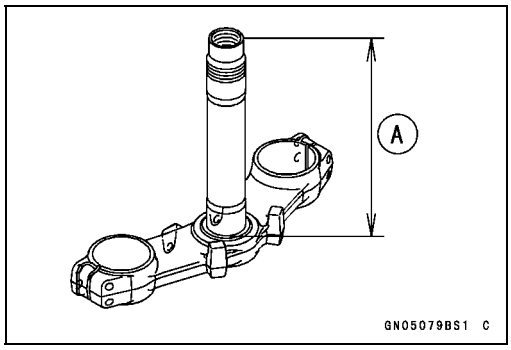

Stem Cap Deterioration, Damage Inspection

★Replace the stem cap if its oil seal [A] shows damage.

Handlebar

Handlebar Removal

- Remove:
  Clutch Lever Clamp Bolts [A]
  Clutch Lever Assembly [B]
  Left Switch Housing [C]
  Handlebar Weight [D]
  Handlebar Grip [E]

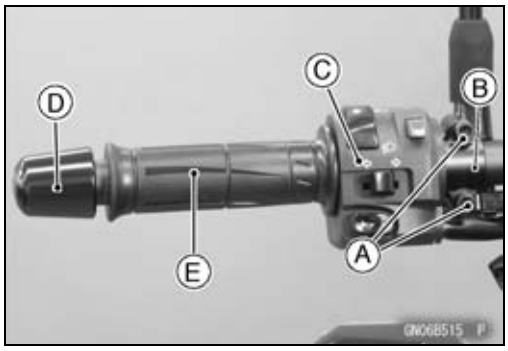

- Remove:
  Front Master Cylinder [A] (see Front Master Cylinder Removal in the Brakes chapter)
  Right Switch Housing [B]
  Throttle Case [C]
  Handlebar Weight [D]
  Throttle Grip [E]

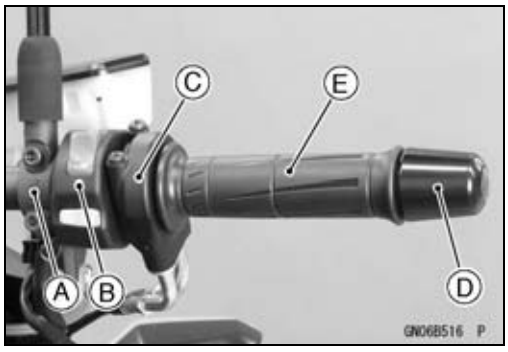

- Remove:
  Handlebar Holder Plugs
  Handlebar Holder Bolts [A]
  Handlebar Holder [B]
  Handlebar [C]

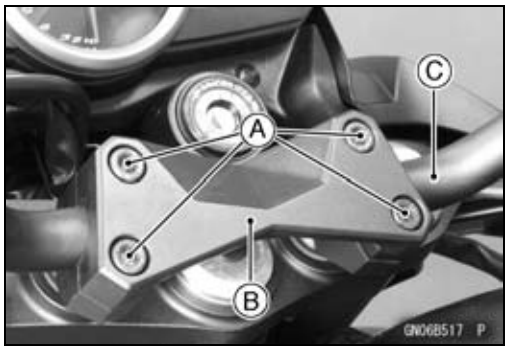

- Remove:
  Cotter Pins [A]
  Lower Holder Nuts [B]
  Washers
  Handlebar Lower Holders [C]

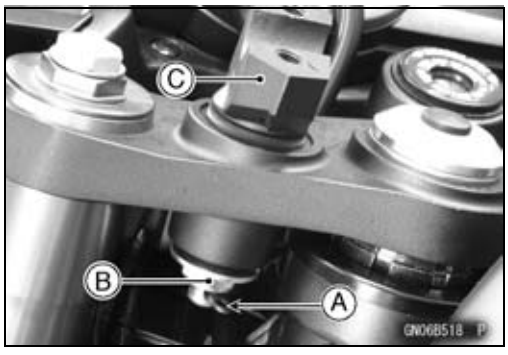

Handlebar Installation

- Install the handlebar lower holders [A], noting the letters "L" [B] and "R" [C].
- Replace the handlebar lower holder nuts with new ones.
- Install the washers.
- Tighten:

  Torque - Handlebar Lower Holder Nuts: 34 N·m (3.5 kgf·m, 25 ft·lb)

- Install the cotter pins.

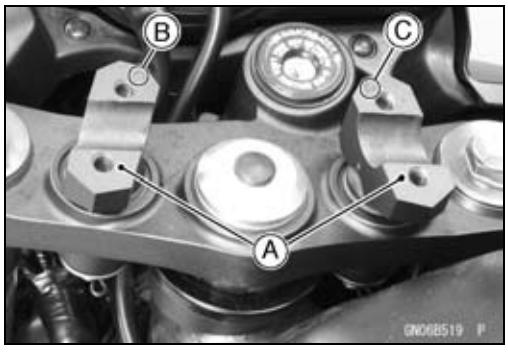

Handlebar

- Align the punch mark [A] on the handlebar and the corner edge [B] on the lower holder.

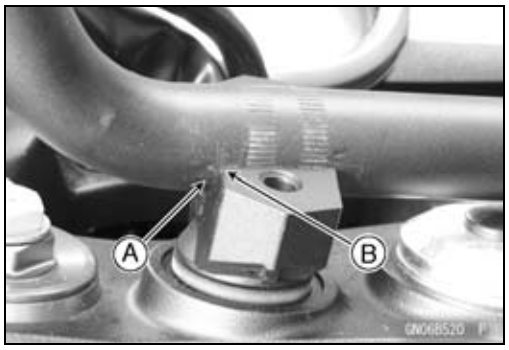

- Tighten the front holder bolts first, and then the rear holder bolts. There will be a gap [A] at the rear part of the holder after tightening.

  Torque - Handlebar Holder Bolts: 25 N·m (2.5 kgf·m, 18 ft·lb)

- Install the handlebar holder plugs.

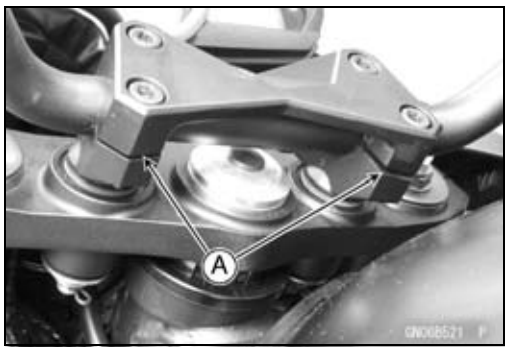

- Install the clutch lever (see Clutch Lever Installation in the Clutch chapter).
- Apply adhesive cement to the inside of the left handlebar grip.
- Apply a non-permanent locking agent to the left handlebar weight screw, and tighten it.
- Install the left switch housing.

○Fit the projection [A] into a hole [B] in the handlebar.

- Tighten:

  Torque - Switch Housing Screws: 3.5 N·m (0.36 kgf·m, 31 in·lb)

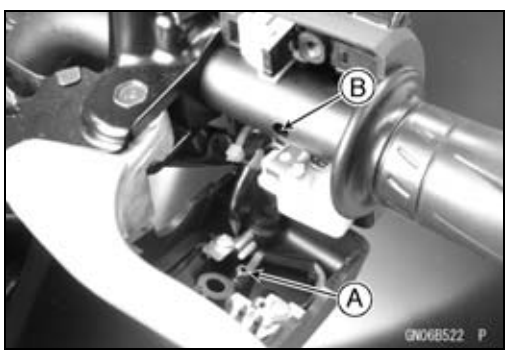

- Insert the throttle cables [A] into the throttle case [B].
- Install the throttle cable holder plate [C].
- Tighten the holder plate screw [D].

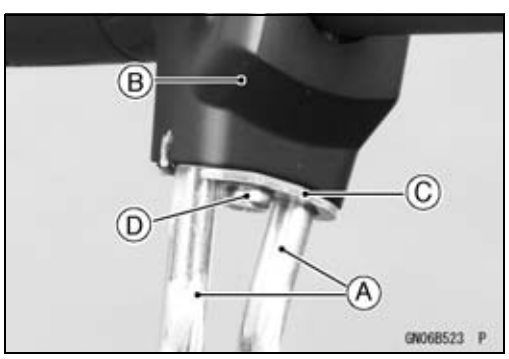

Handlebar

- Install the throttle cable tips [A] to the throttle grip [B].
○Fit the projection [C] into a hole [D] in the handlebar.
- Apply a non-permanent locking agent to the threads of the right handlebar weight screw, and tighten it.

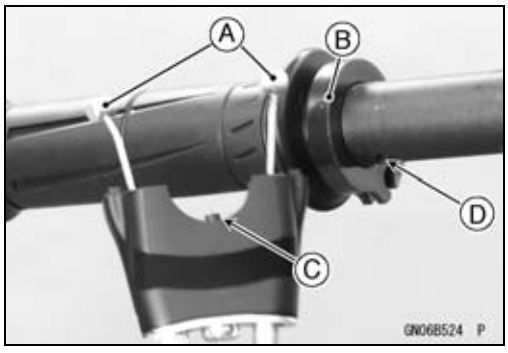

- Install the right switch housing.
○Fit the projection [A] into a hole [B] in the handlebar.

Torque - Switch Housing Screws: 3.5 N·m (0.36 kgf·m, 31 in·lb)

- Install the front master cylinder (see Front Master Cylinder Installation in the Brake chapter).

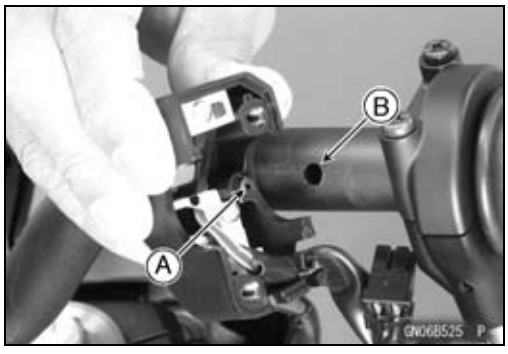

Frame

Table of Contents

Exploded View 15-2
Seats 15-8
Rear Seat Removal 15-8
Rear Seat Installation 15-8
Front Seat Removal 15-8
Front Seat Installation 15-8
Fairings 15-9
Center Fairing Removal 15-9
Center Fairing Installation 15-9
Upper Fairing Removal 15-9
Upper Fairing Disassembly 15-10
Upper Fairing Assembly 15-10
Upper Fairing Installation 15-10
Inner Cover Removal 15-10
Inner Cover Installation 15-10
Upper Fairing Bracket Removal 15-11
Upper Fairing Bracket Installation 15-11
Inner Fairing Removal 15-11
Inner Fairing Installation 15-11
Side Covers 15-12
Sub Side Cover Removal 15-12
Sub Side Cover Installation 15-12
Side Cover Removal 15-12
Side Cover Installation 15-12
Seat Covers 15-13
Seat Cover Removal 15-13
Seat Cover Installation 15-14
Fenders 15-15
Front Fender Removal 15-15
Front Fender Installation 15-15
Flap and Rear Fender Removal 15-15
Flap and Rear Fender Installation 15-16
Frame 15-17
Frame Inspection 15-17
Sidestand 15-18
Sidestand Removal 15-18
Sidestand Installation 15-18
Frame Cover 15-19
Frame Cover Removal 15-19
Frame Cover Installation 15-19
Rear View Mirrors 15-20
Rear View Mirrors Removal 15-20
Rear View Mirror Installation 15-20

Exploded View

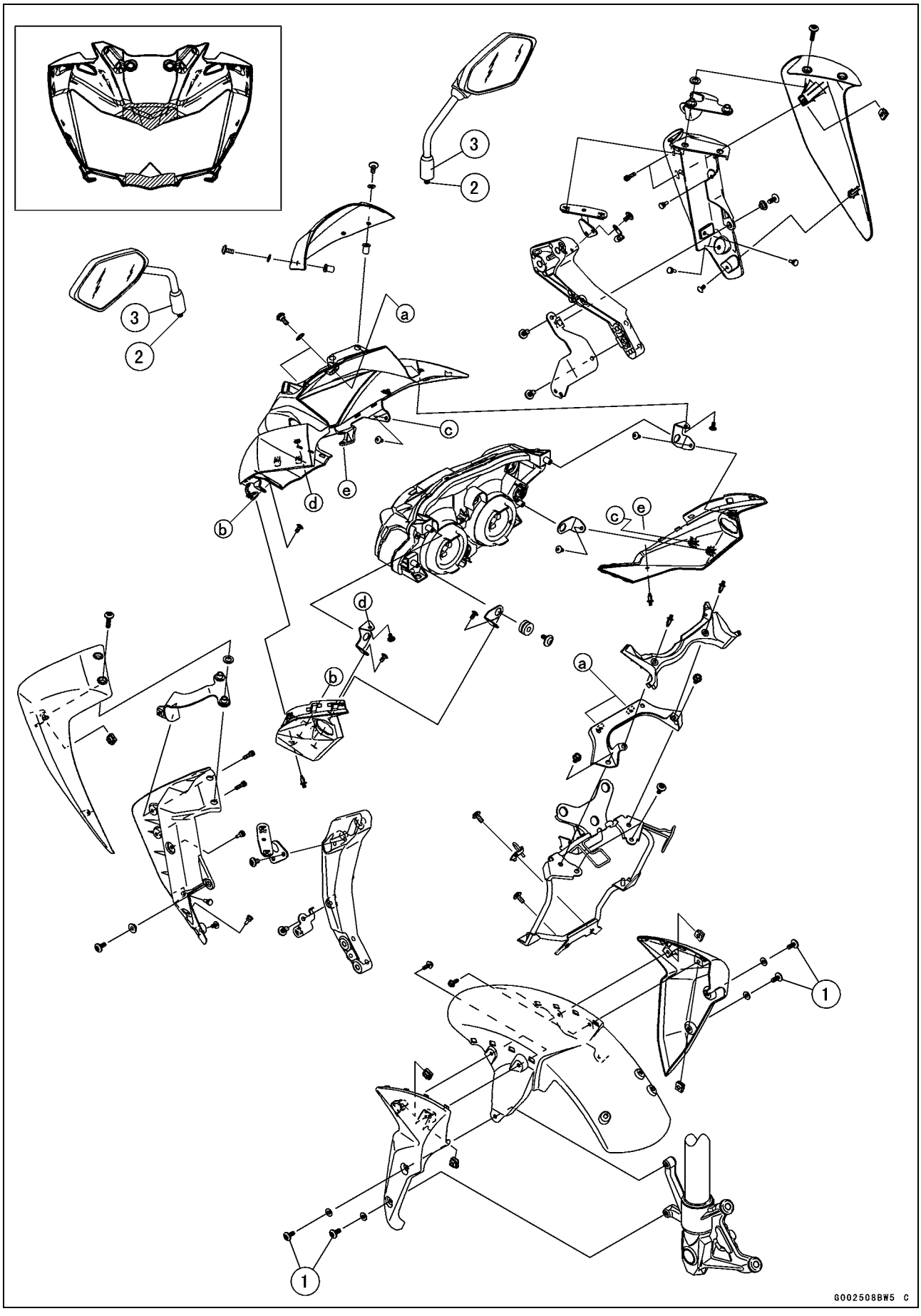

Exploded View

No.	Fastener	Torque			Remarks
		N·m	kgf·m	ft·lb	
1	Front Fender Bolts	3.9	0.40	35 in·lb	
2	Rear View Mirror (Lower Hexagonal Area)	30	3.1	22	
3	Rear View Mirror (Upper Hexagonal Area)	18	1.8	13	

Exploded View

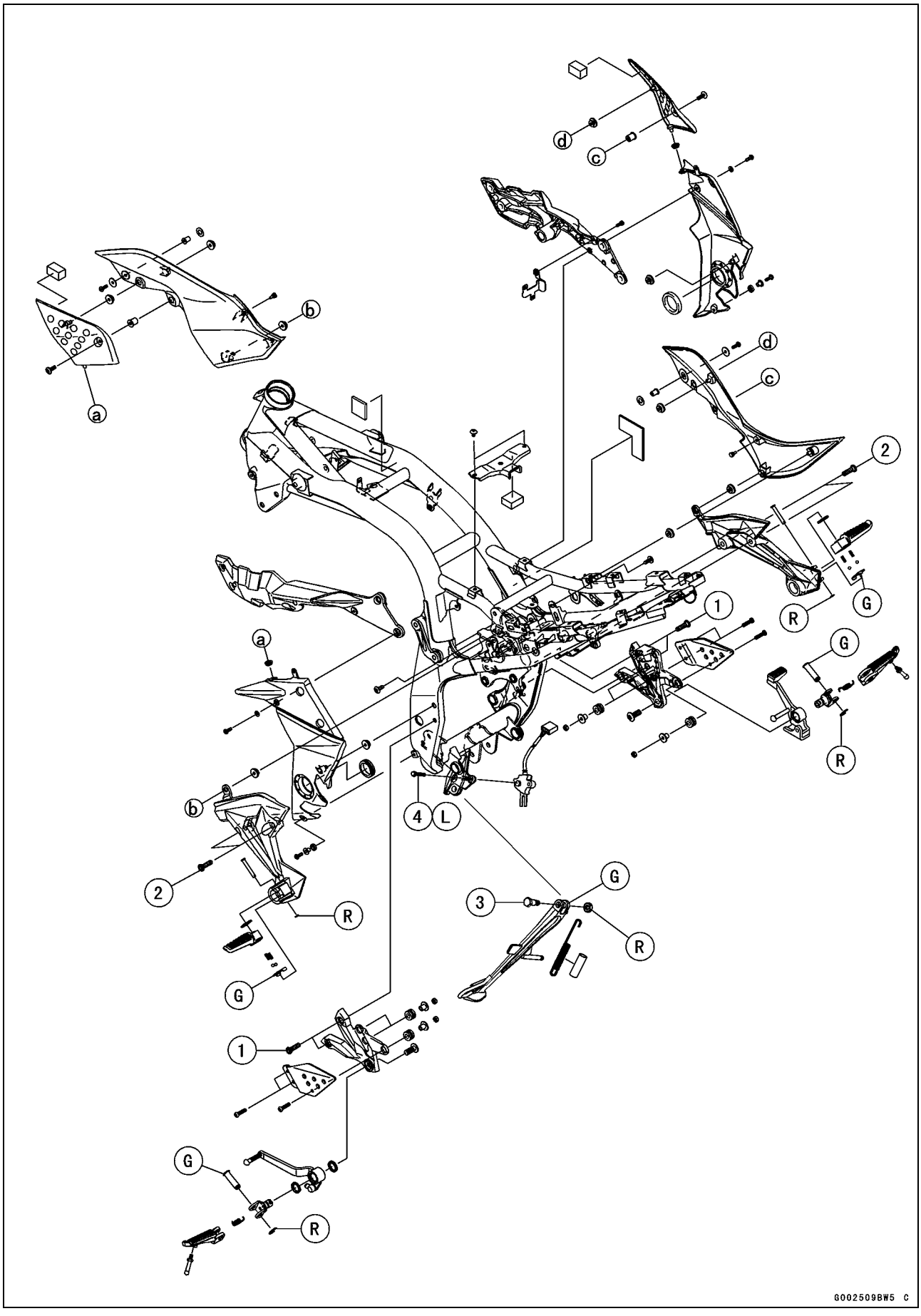

Exploded View

No.	Fastener	Torque			Remarks
		N·m	kgf·m	ft·lb	
1	Front Footpeg Bracket Bolts	25	2.5	18	
2	Rear Footpeg Bracket Bolts	25	2.5	18	
3	Sidestand Bolt	44	4.5	32	
4	Sidestand Switch Bolt	8.8	0.90	78 in·lb	L

G: Apply grease.
L: Apply a non-permanent locking agent.
R: Replacement Parts

Exploded View

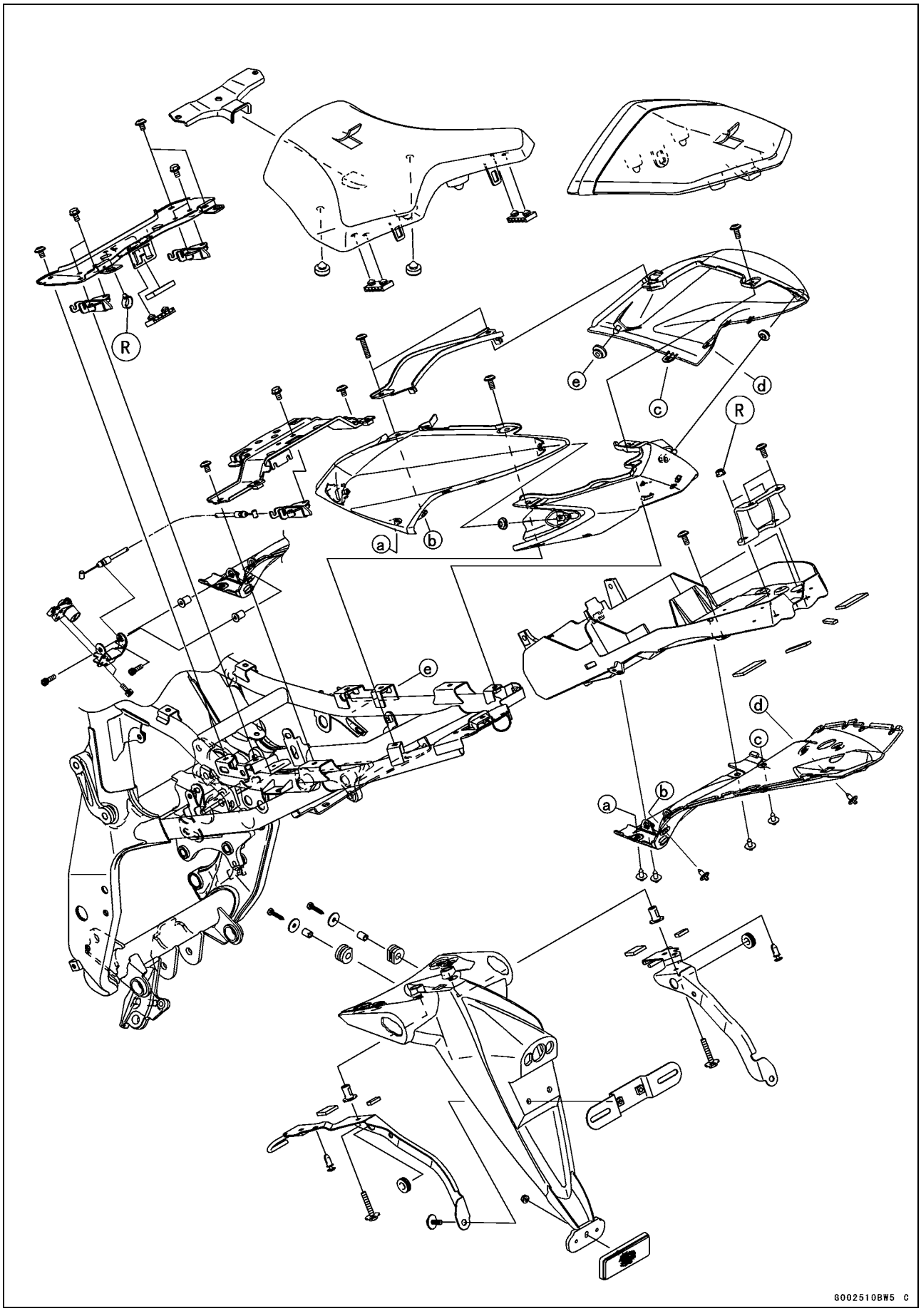

Exploded View

R: Replacement Parts

Seats

Rear Seat Removal

- Insert the ignition switch key [A] into the seat lock, turning the key clockwise, pulling the front part of the seat [B] up, and pull the seat forward.

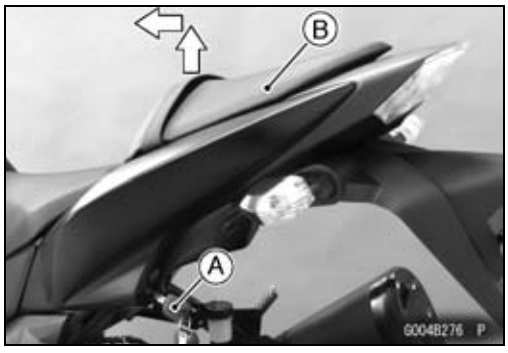

Rear Seat Installation

- Insert the rear seat hook [A] into the bracket [B] of the frame.
- Insert the seat hook [C] into the latch hole [D].
- Push down the front part of the seat until the lock clicks.

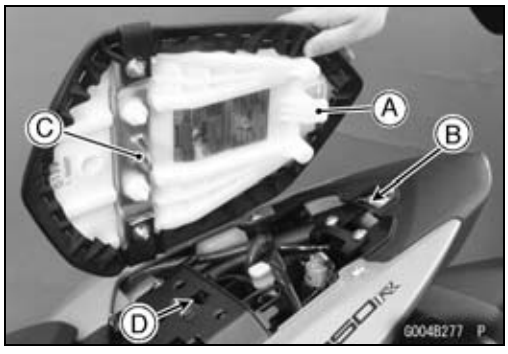

Front Seat Removal

- Remove the rear seat (see Rear Seat Removal).
- Pull the seat lock cable [A], and then remove the front seat [B] by pulling the rear of it up and backward.

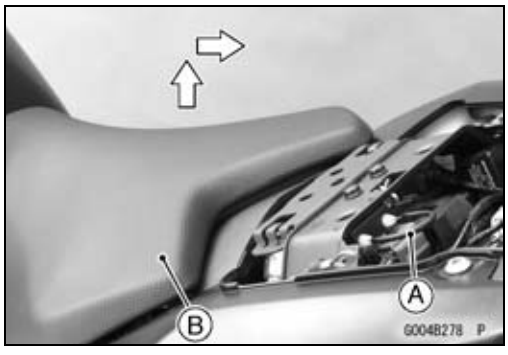

Front Seat Installation

- Insert the front seat hook [A] under the brace [B] of the fuel tank bracket.
- Insert the seat hooks [C] into the latch holes [D].
- Push down the rear part of the seat until the lock clicks.

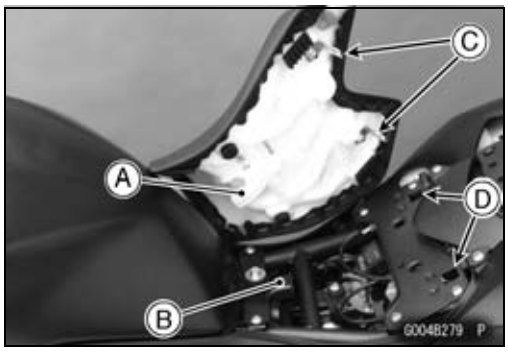

Fairings

Center Fairing Removal

- Remove:
  Bolts [A]
  Center Fairing [B]

- Remove:
  Inner Fairing (see Inner Fairing Removal)
  Bracket

Center Fairing Installation

- Installation is the reverse of removal.

Upper Fairing Removal

- Remove:
  Bolts [A]
  Meter Cover [B]

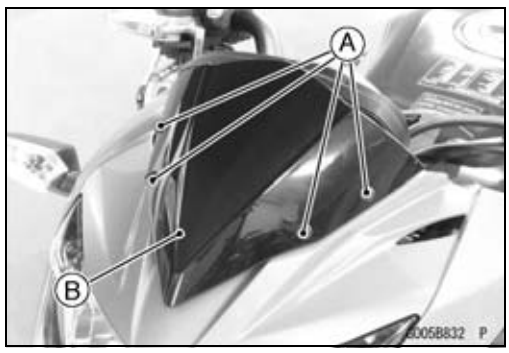

- Remove the bolts [A]
- Pull out the upper fairing [B] forward.

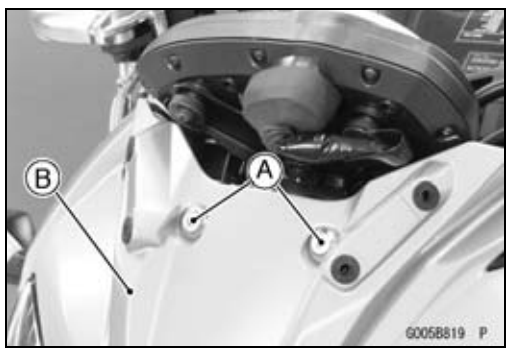

- Disconnect:
  Headlight Lead Connectors [A]
  City Light Lead Connectors [B]
  Left and Right Turn Signal Lead Connector [C]
- Remove the upper fairing [D].

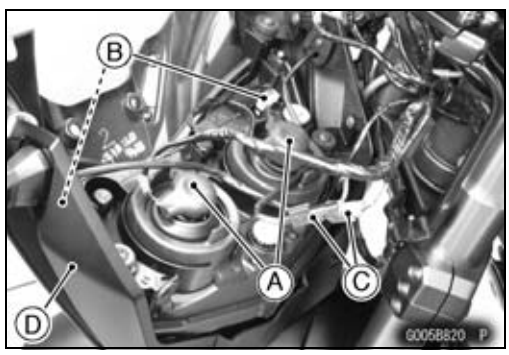

Fairings

Upper Fairing Disassembly

- Remove:
  Upper Fairing (see Upper Fairing Removal)
  Headlight (see Headlight Removal in the Electrical System chapter)
  Screws [A] (Both Sides)
  Turn Signal [B] (Both Sides)

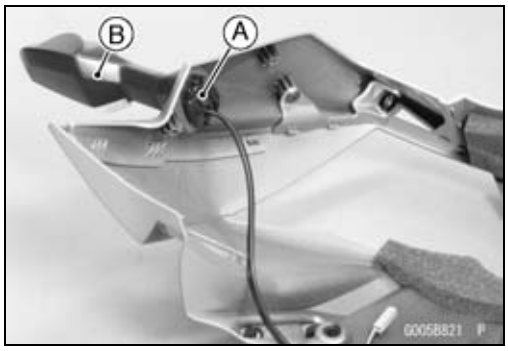

Upper Fairing Assembly

- Check the pads [A] are in place on the upper fairing.
- Installation is the reverse of removal.

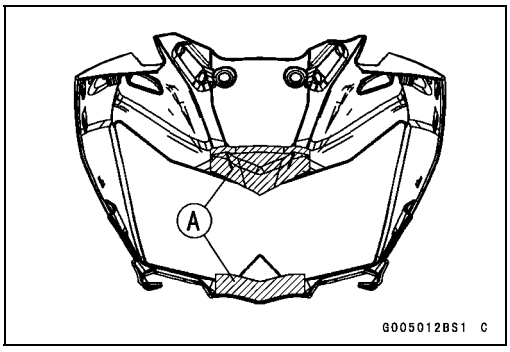

Upper Fairing Installation

- Connect:
  City Light Lead Connectors
  Headlight Lead Connectors
  Left and Right Turn Signal Lead Connectors
- Fit the projections [A] on the upper fairing bracket into the holes [B] of the headlight.
- Tighten the bolts.
- Install the meter cover.

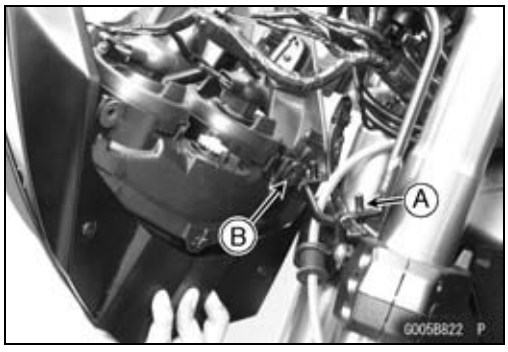

Inner Cover Removal

- Remove the upper fairing (see Upper Fairing Removal).
- Push the central pin, and then remove the quick rivets [A].
- Remove the inner cover [B].

Inner Cover Installation

- Installation is the reverse of removal.

Fairings

Upper Fairing Bracket Removal

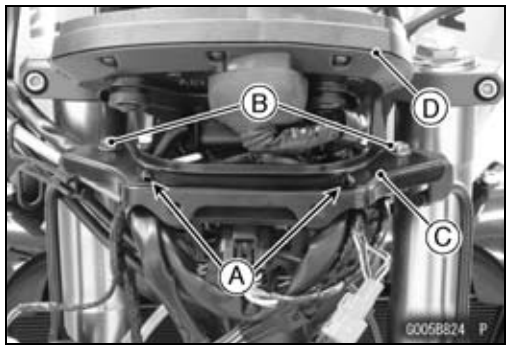

- Remove:
  Upper Fairing (see Upper Fairing Removal)
  Inner Cover (see Inner Cover Removal)
  Clamps [A] (from Bracket)
  Bolts [B]
  Bracket [C]
  Meter Unit [D] (see Meter Unit Removal/Installation in the Electrical System chapter)

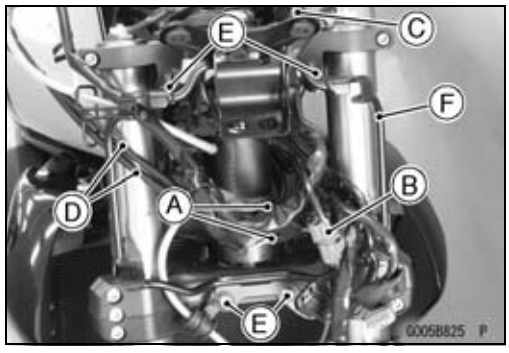

- Disconnect:
  Left and Right Switch Housing Connectors [A]
  Front Wheel Rotation Sensor Lead Connector [B] (ABS Equipped Models)
- Remove:
  Clutch Cable [C]
  Throttle Cables [D]
  Bolts [E]
  Upper Fairing Bracket [E]

Upper Fairing Bracket Installation

- Replace the clamps with new ones.
- Installation is the reverse of removal.

○Run the cables and leads correctly (see Cable, Wire, and Hose Routing section in the Appendix chapter).

Inner Fairing Removal

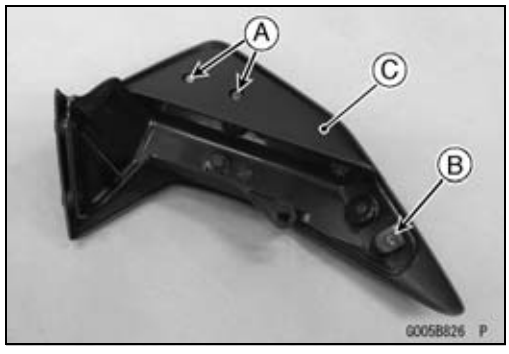

- Remove:
  Center Fairings (see Center Fairing Removal)
  Bolts [A]
  Screw [B]
  Inner Fairing [C]

Inner Fairing Installation

- Installation is the reverse of removal.

Side Covers

Sub Side Cover Removal

- Remove the bolt [A].
- Pull the sub side cover [B] to clear the stoppers [C].

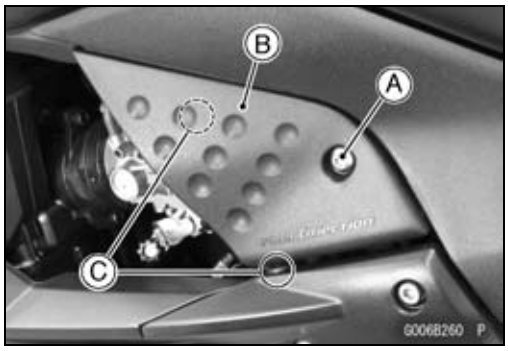

Sub Side Cover Installation

- Check that the pads [A] are in place on the left sub side cover [B] and right sub side cover.
  About 22° [C]
  About 3.0 mm (0.12 in.) [D]
  About 4.0 mm (0.16 in.) [E]

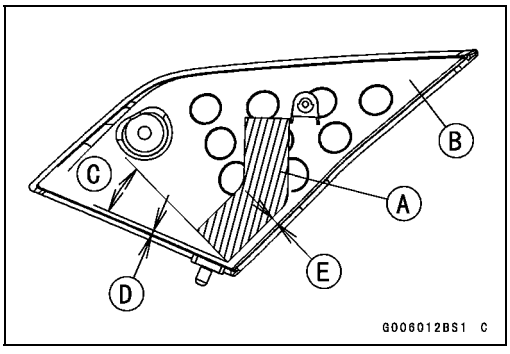

- Insert the projections [A] into the holes [B].
- Tighten the bolt.

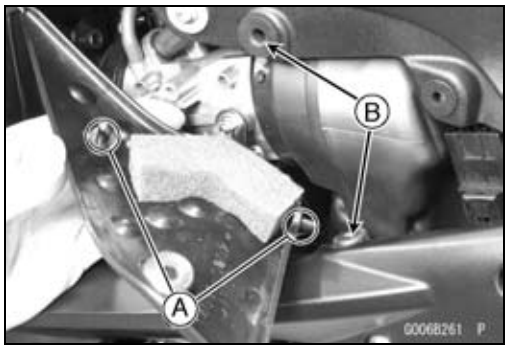

Side Cover Removal

- Remove:
  Front Seat (see Front Seat Removal)
  Sub Side Cover (see Sub Side Cover Removal)
  Bolt [A]
- Pull the side cover [B] evenly outward to clear the stoppers [C].

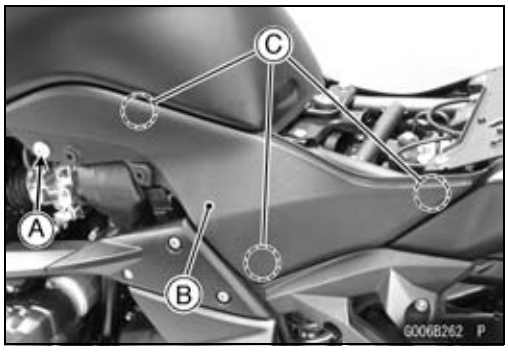

Side Cover Installation

- Insert the projections [A] into the holes [B].
- Install:
  Bolt
  Sub Side Cover (see Sub Side Cover Installation)

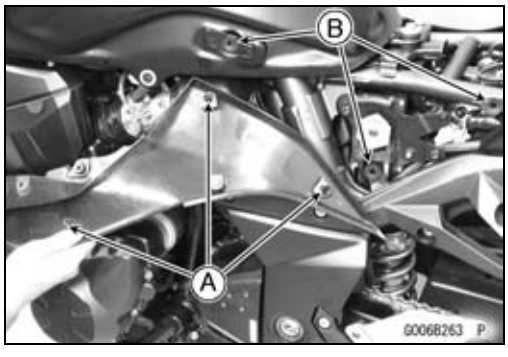

Seat Covers

Seat Cover Removal

- Remove:
  Seats (see Rear/Front Seat Removal)
  Side Covers (see Side Cover Removal)
  Rivet Screws [A]

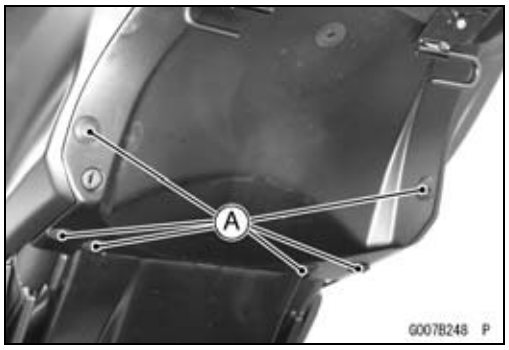

- Remove the bolts [A].
- Pull the front seat cover [B] to clear the stoppers [C].
- Pull the left and right seat covers [D] to clear the stoppers [E].

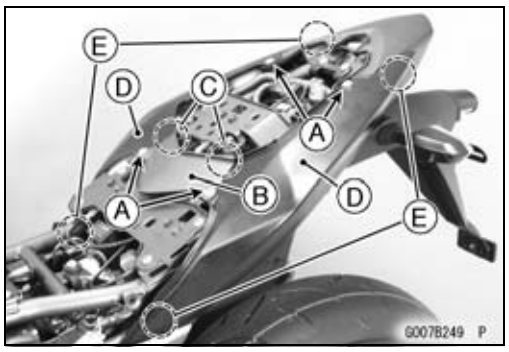

- Remove:
  Bolts [A]
  Seat Bracket [B]
  Turn Signal Light Lead Connectors (Disconnect)
  License Plate Light Lead Connector (Disconnect)

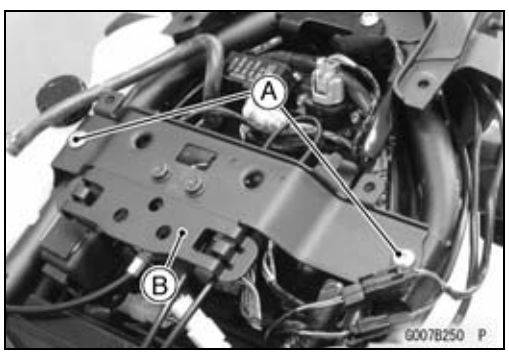

- Remove:
  ECU (see ECU Removal in the Fuel System (DFI) chapter)
  Bolts [A]
  Nuts [B]
  Seat Lock Cable
- Remove the center seat cover from the lower seat cover.

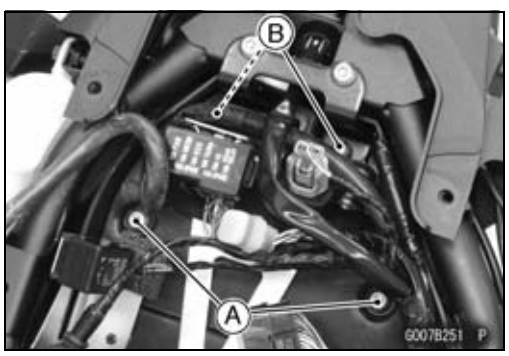

- Remove:
  Tail/Brake Light [A] (see Tail/Brake Light (LED) Removal in the Electrical System chapter)
  Center Seat Cover [B]

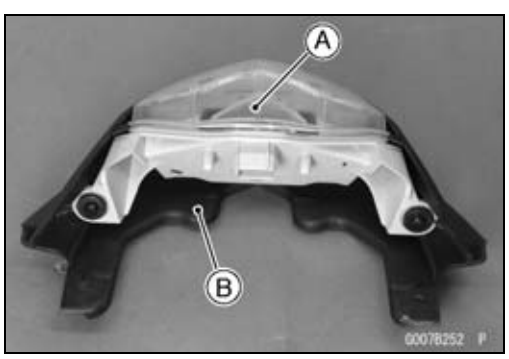

Seat Covers

- Remove:
  Rivets [A]
  Bolts [B]
  Brackets [C]
  Flap [D] (with Turn Signal and License Plate Lights)
  Bolts and Seat Lock Bracket
  Lower Seat Cover

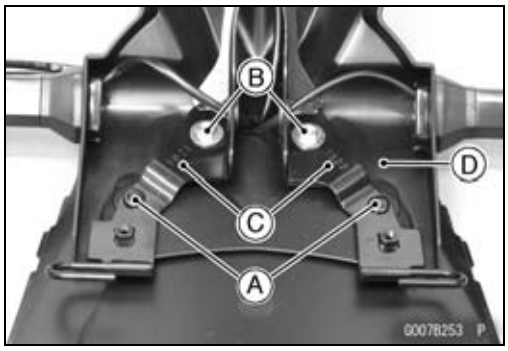

Seat Cover Installation

- Installation is the reverse of removal.
- Put the projections [A] into the holes [B] of the center seat cover.

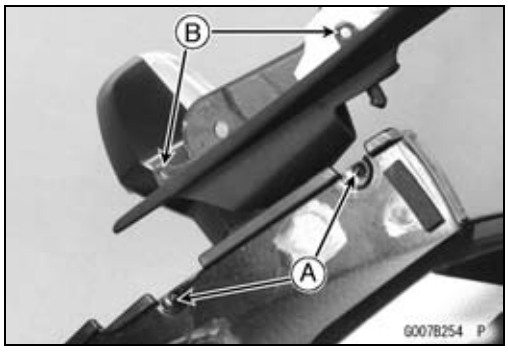

- Replace the nuts [A] with new ones.
- Tighten the nuts and bolts [B].

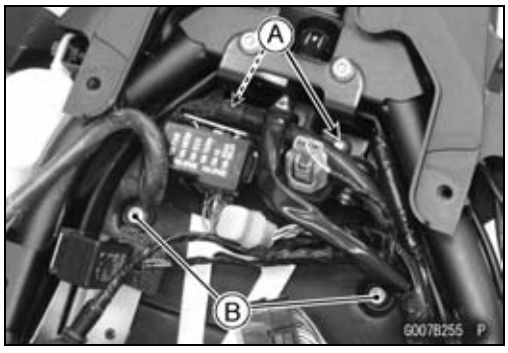

- Run the cables, leads and hose correctly (see Cable, Wire, and Hose Routing section in the Appendix chapter).
- Put the projections [A] into the holes [B].

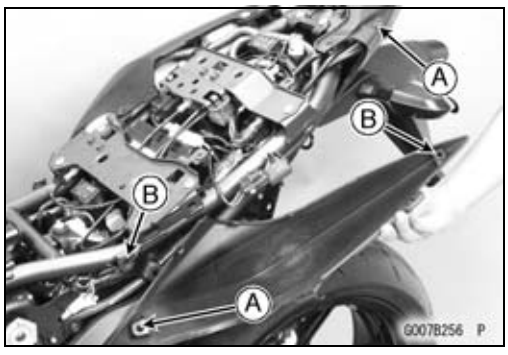

- Put the projections [A] into the holes [B].
- Install the removed parts (see appropriate chapters).

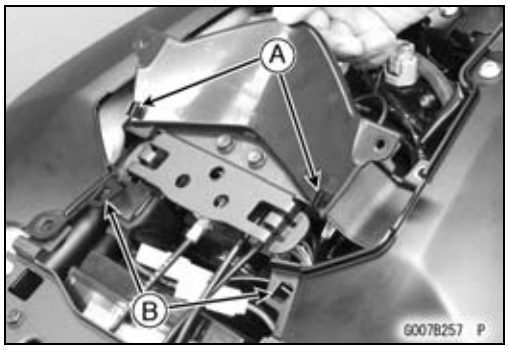

Fenders

Front Fender Removal

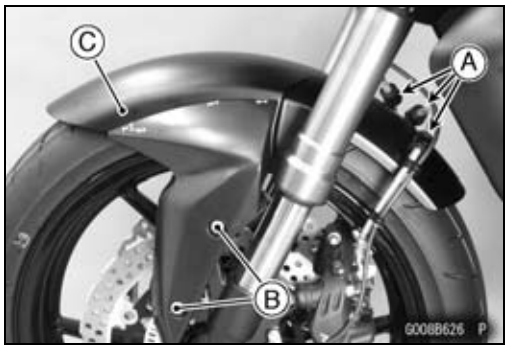

- Remove:
  Brake Hose Clamps [A] (Both Sides)
  Bolts [B] with Washers (Both Sides)
  Front Fender [C]

Front Fender Installation

- Replace the brake hose clamps with new ones.
- Install the front fender to the front fork.
- Tighten:

  Torque - Front Fender Bolts: 3.9 N·m (0.40 kgf·m, 35 in·lb)
- Install the brake hose clamps to the front fender holes.

Flap and Rear Fender Removal

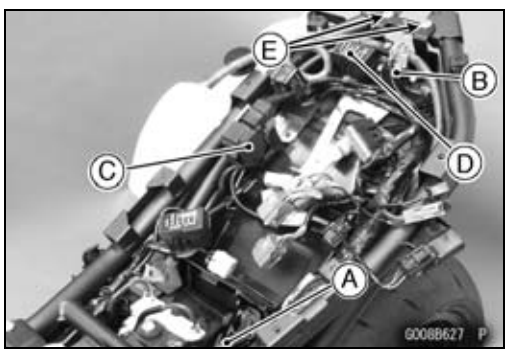

- Remove:
  Seats (see Rear/Front Seat Removal)
  Seat Covers (see Seat Cover Removal)
  Exhaust Butterfly Valve Actuator Mounting Bolts (see Exhaust Butterfly Valve Actuator Removal in the Fuel System (DFI) chapter)
  Battery (see Battery Removal in the Electrical System chapter)
  Owner's Tool [A]
  Vehicle-down Sensor [B] (see Vehicle-down Sensor Removal in the Fuel System (DFI) chapter)
  Starter Relay [C] (see Starter Relay Inspection in the Electrical System chapter)
  Fuse Box [D]
  Bolts [E]
  Flap (see Seat Cover Removal)

Fenders

- Remove the bolts [A].
  Left Side [B]
  Right Side [C]
- Pull out the rear fender backward.

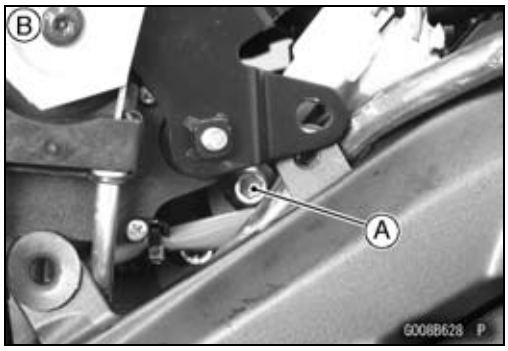

Flap and Rear Fender Installation

- Installation is the reverse of removal.
- Install the removed parts (see appropriate chapters).
- Run the cables, leads, harness and hose correctly (see Cable, Wire, and Hose Routing section in the Appendix chapter).

Frame

Frame Inspection

- Visually inspect the frame for cracks, dents, bending, or warp.

○If there is any damage to the frame, replace it.

⚠ WARNING
A repaired frame may fail in use, possibly causing an accident resulting in injury or death. If the frame is bent, dented, cracked, or warped, replace it.

Sidestand

Sidestand Removal

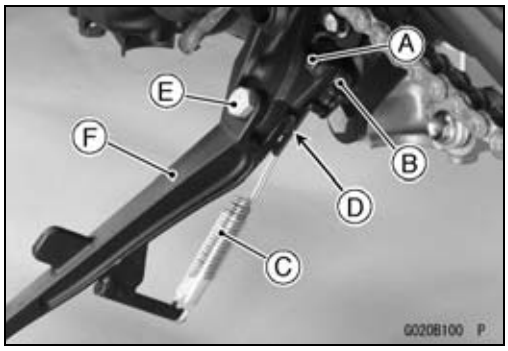

- Raise the rear wheel off the ground with the stand.
- Remove:
  Sidestand Switch Bolt [A]
  Sidestand Switch [B]
  Spring [C]
  Sidestand Nut [D]
  Sidestand Bolt [E]
  Sidestand [F]

Sidestand Installation

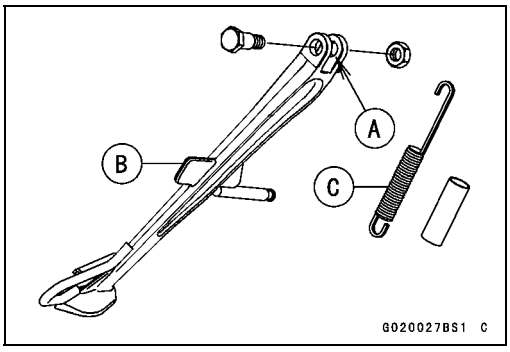

- Apply grease to the sliding area [A] of the sidestand [B].
- Replace the sidestand nut with a new one.
- Tighten the bolt and lock them with the nut.

  Torque - Sidestand Bolt: 44 N·m (4.5 kgf·m, 32 ft·lb)

- Hook the spring [C] so that face the long spring end upward.

○Install the spring hook direction as shown in the figure.

- Install the sidestand switch.
- Apply a non-permanent locking agent to the thread of the switch bolt, and tighten it.

  Torque - Sidestand Switch Bolt: 8.8 N·m (0.90 kgf·m, 78 in·lb)

Frame Cover

Frame Cover Removal

- Remove the bolts [A].
- Pull out the frame cover [B], and clear the stopper [C].

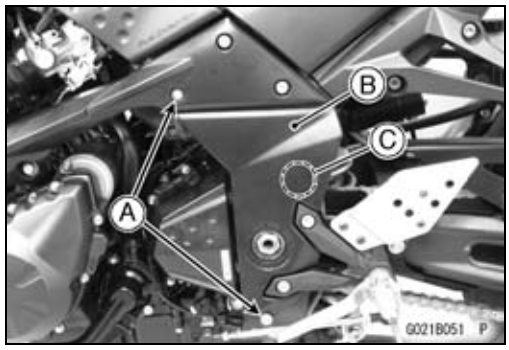

Frame Cover Installation

- Insert the projection [A] into the hole [B].
- Tighten the bolts.

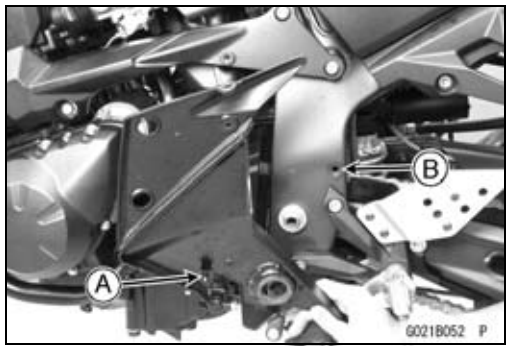

Rear View Mirrors

Rear View Mirrors Removal

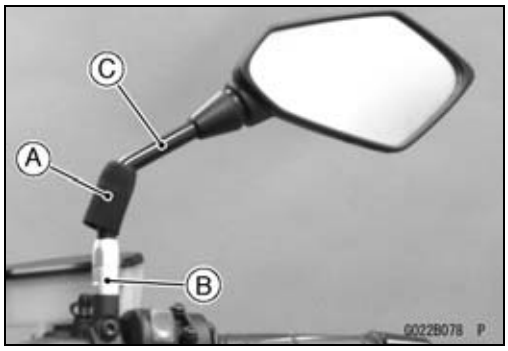

- Slide the dust cover [A].
- Loosen the lower hexagonal area [B], and remove the rear view mirror [C] from the holder.

○The lower hexagonal area and rear view mirror are left -hand thread.

Rear View Mirror Installation

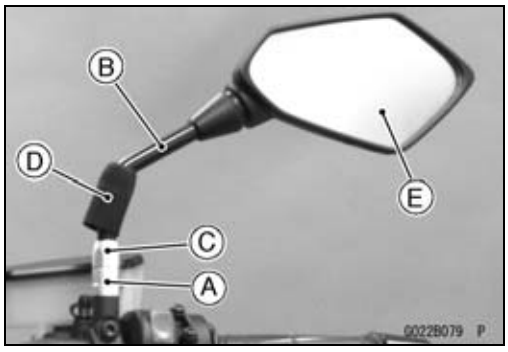

- Tighten the lower hexagonal area [A], and install the rear view mirror.

Torque - Rear View Mirror (Lower Hexagonal Area): 30 N·m (3.1 kgf·m, 22 ft·lb)

- Turn the stay [B] to assure the safe conditions of the rear with the rider sitting on the motorcycle by loosening the upper hexagonal area [C] clockwise.

○The upper hexagonal area is left-hand thread.

- Tighten the upper hexagonal area.

Torque - Rear View Mirror (Upper Hexagonal Area): 18 N·m (1.8 kgf·m, 13 ft·lb)

- Install the dust cover [D].
- Adjust the rear view mirror [E] by slightly moving only the mirror portion of the assembly.

○Installation and adjustment of the left side are common with the those of right side. Follow the procedure specified at the right side.

Electrical System

Table of Contents

Exploded View 16-4
Specifications 16-10
Special Tools and Sealant 16-11
Parts Location 16-12
Wiring Diagram 16-14
Wiring Diagram (ABS Equipped Models) 16-16
Precautions 16-18
Electrical Wiring 16-19
  Wiring Inspection 16-19
Battery 16-20
  Battery Removal 16-20
  Battery Installation 16-20
  Battery Activation 16-21
  Precautions 16-24
  Interchange 16-24
  Charging Condition Inspection 16-24
  Refreshing Charge 16-25
Charging System 16-26
  Alternator Cover Removal 16-26
  Alternator Cover Installation 16-27
  Stator Coil Removal 16-27
  Stator Coil Installation 16-28
  Alternator Rotor Removal 16-28
  Alternator Rotor Installation 16-29
  Alternator Inspection 16-30
  Regulator/Rectifier Inspection 16-32
  Charging Voltage Inspection 16-34
Ignition System 16-36
  Crankshaft Sensor Removal 16-36
  Crankshaft Sensor Installation 16-37
  Crankshaft Sensor Inspection 16-38
  Crankshaft Sensor Peak Voltage Inspection 16-39
  Timing Rotor Removal 16-39
  Timing Rotor Installation 16-39
  Camshaft Position Sensor Removal 16-40
  Camshaft Position Sensor Installation 16-40
  Camshaft Position Sensor Inspection 16-41
  Camshaft Position Sensor Peak Voltage Inspection 16-41
  Stick Coil Removal 16-42
  Stick Coil Installation 16-42
  Stick Coil Inspection 16-43
  Stick Coil Primary Peak Voltage 16-43
  Spark Plug Removal 16-44
  Spark Plug Installation 16-44
  Spark Plug Condition Inspection 16-44
  Interlock Operation Inspection 16-44
  IC Igniter Inspection 16-45
Electric Starter System 16-48
  Starter Motor Removal 16-48
  Starter Motor Installation 16-48

Starter Motor Disassembly 16-49
Starter Motor Assembly 16-49
Brush Inspection 16-50
Commutator Cleaning and Inspection 16-51
Armature Inspection 16-51
Brush Lead Inspection 16-51
Brush Plate and Terminal Bolt Inspection 16-52
Starter Relay Inspection 16-52
Lighting System 16-54
Headlight Beam Horizontal Adjustment 16-54
Headlight Beam Vertical Adjustment 16-54
Headlight Bulb Replacement 16-54
Headlight Removal/Installation 16-55
City Light Bulb Replacement 16-56
Tail/Brake Light (LED) Removal 16-56
Tail/Brake Light (LED) Installation 16-56
License Plate Light Bulb Replacement 16-57
Turn Signal Light Bulb Replacement 16-58
Turn Signal Relay Inspection 16-59
Air Switching Valve 16-61
Air Switching Valve Operation Test 16-61
Air Switching Valve Unit Test 16-61
Radiator Fan System 16-63
Fan Motor Inspection 16-63
Meter, Gauge, Indicator Unit 16-64
Meter Unit Removal/Installation 16-64
Meter, Gauge Disassembly 16-64
Electronic Combination Meter Unit Inspection 16-65
Fuel Level Sensor Line Self-Diagnosis Mode Inspection 16-76
Immobilizer System 16-78
Operational Cautions 16-78
Key Registration 16-78
Immobilizer System Parts Replacement 16-96
Immobilizer System Inspection 16-99
Switches and Sensors 16-101
Brake Light Timing Inspection 16-101
Brake Light Timing Adjustment 16-101
Switch Inspection 16-101
Water Temperature Sensor Inspection 16-102
Speed Sensor Removal 16-102
Speed Sensor Installation 16-103
Speed Sensor Inspection 16-103
Oxygen Sensor Removal 16-103
Oxygen Sensor Installation 16-104
Oxygen Sensor Inspection 16-104
Fuel Level Sensor Inspection 16-104
Relay Box 16-106
Relay Box Removal 16-106
Relay Circuit Inspection 16-106
Diode Circuit Inspection 16-107
Fuse 16-109
30 A Main Fuse Removal 16-109
Fuse Box Fuse Removal 16-109
10 A ECU Fuse Removal 16-110
Fuse Installation 16-110
Fuse Inspection 16-110

This page intentionally left blank.

Exploded View

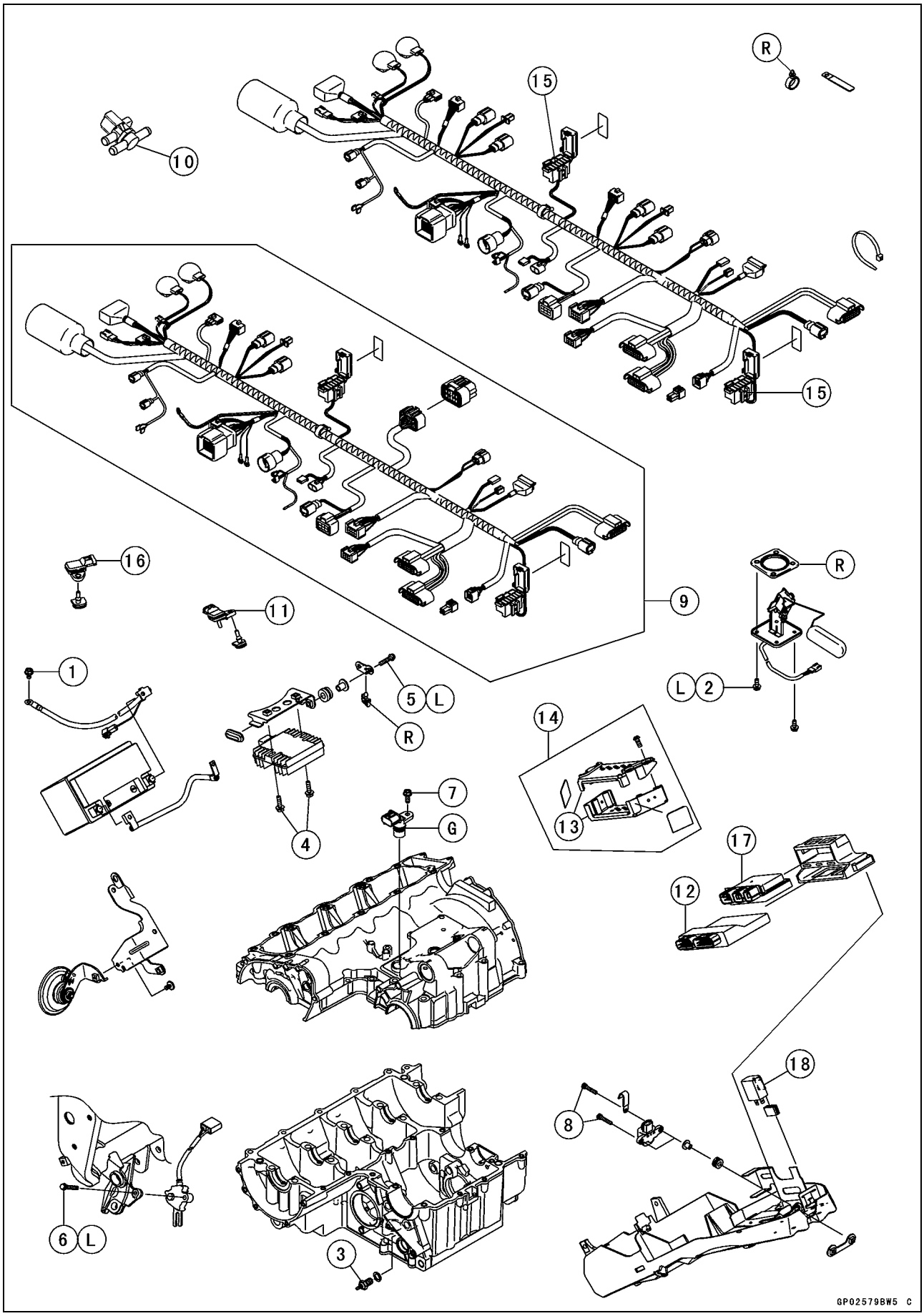

Exploded View

No.	Fastener	Torque			Remarks
		N·m	kgf·m	ft·lb	
1	Engine Ground Cable Terminal Bolt	9.8	1.0	87 in·lb	
2	Fuel Level Sensor Bolts	6.9	0.70	61 in·lb	L
3	Neutral Switch	15	1.5	11	
4	Regulator/Rectifier Bolts	6.9	0.70	61 in·lb	
5	Regulator/Rectifier Bracket Bolts	6.9	0.70	61 in·lb	L
6	Sidestand Switch Bolt	8.8	0.90	78 in·lb	L
7	Speed Sensor Bolt	12	1.2	106 in·lb	
8	Vehicle-down Sensor Bolts	6.0	0.61	53 in·lb	

9. ABS Equipped Models
10. Air Switching Valve
11. Atmospheric Pressure Sensor
12. ECU
13. ECU Guards
14. GB Model, WVTA (78.2H) Model
15. Fuse Boxes
16. Intake Air Pressure Sensor
17. Relay Box
18. Turn Signal Relay

G: Apply grease.
L: Apply a non-permanent locking agent.
R: Replacement Parts

Exploded View

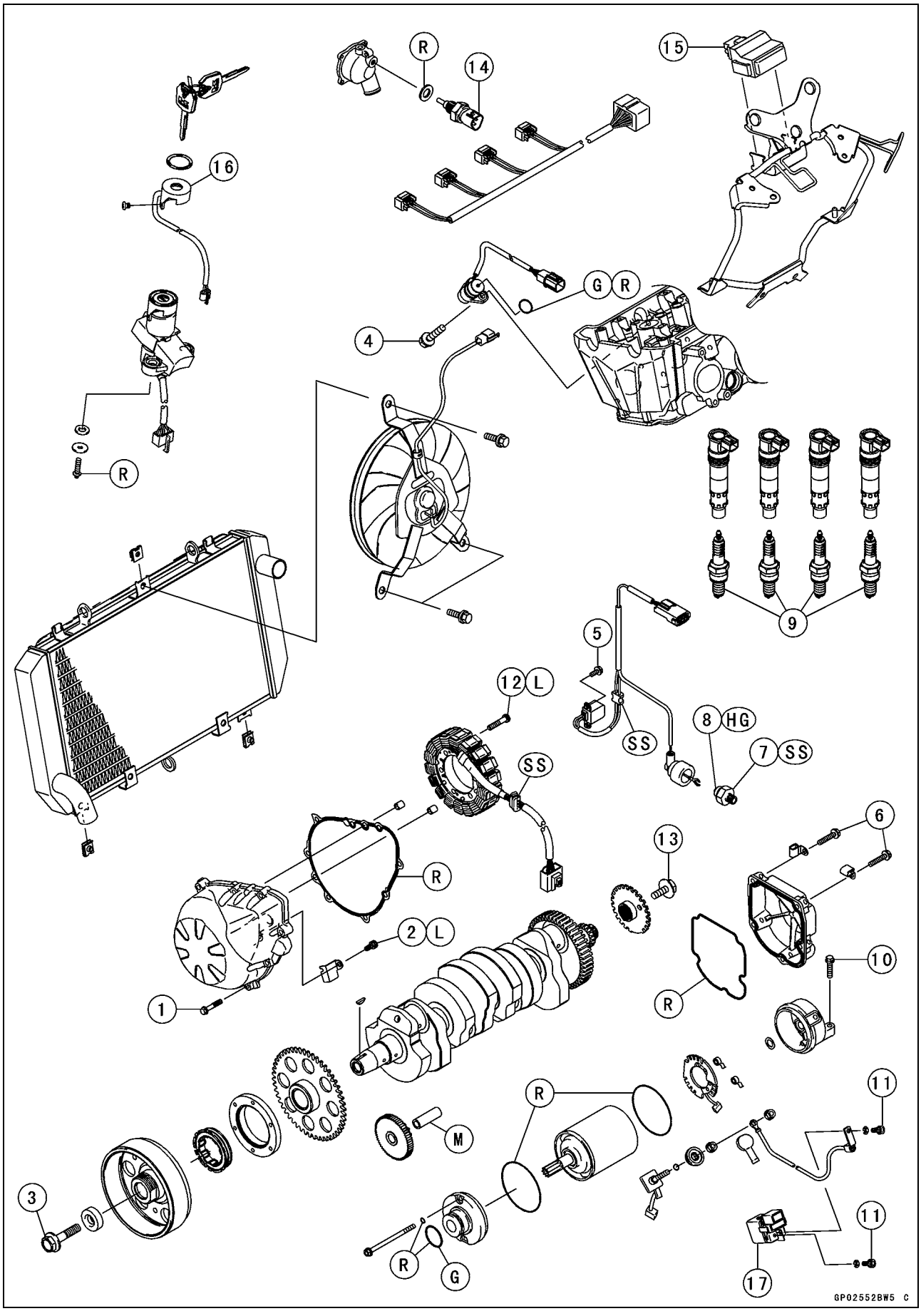

Exploded View

No.	Fastener	Torque			Remarks
		N·m	kgf·m	ft·lb	
1	Alternator Cover Bolts	11	1.1	97 in·lb	
2	Alternator Lead Holding Plate Bolt	12	1.2	106 in·lb	L
3	Alternator Rotor Bolt	155	15.8	114	
4	Camshaft Position Sensor Bolt	12	1.2	106 in·lb	
5	Crankshaft Sensor Bolts	5.9	0.60	52 in·lb	
6	Crankshaft Sensor Cover Bolts	11	1.1	97 in·lb	
7	Oil Pressure Switch	15	1.5	11	SS
8	Oil Pressure Switch Terminal Bolt	2.0	0.20	18 in·lb	HG
9	Spark Plugs	13	1.3	115 in·lb	
10	Starter Motor Mounting Bolts	11	1.1	97 in·lb	
11	Starter Relay Cable Terminal Bolts	3.9	0.40	35 in·lb	
12	Stator Coil Bolts	12	1.2	106 in·lb	L
13	Timing Rotor Bolt	39	4.0	29	
14	Water Temperature Sensor	25	2.5	18	

15. Immobilizer Amplifier
16. Immobilizer Antenna
17. Starter Relay

G: Apply grease.
HG: Apply high-temperature grease.
L: Apply a non-permanent locking agent.
M: Apply molybdenum disulfide grease.
R: Replacement Parts
SS: Apply silicone sealant.

Exploded View

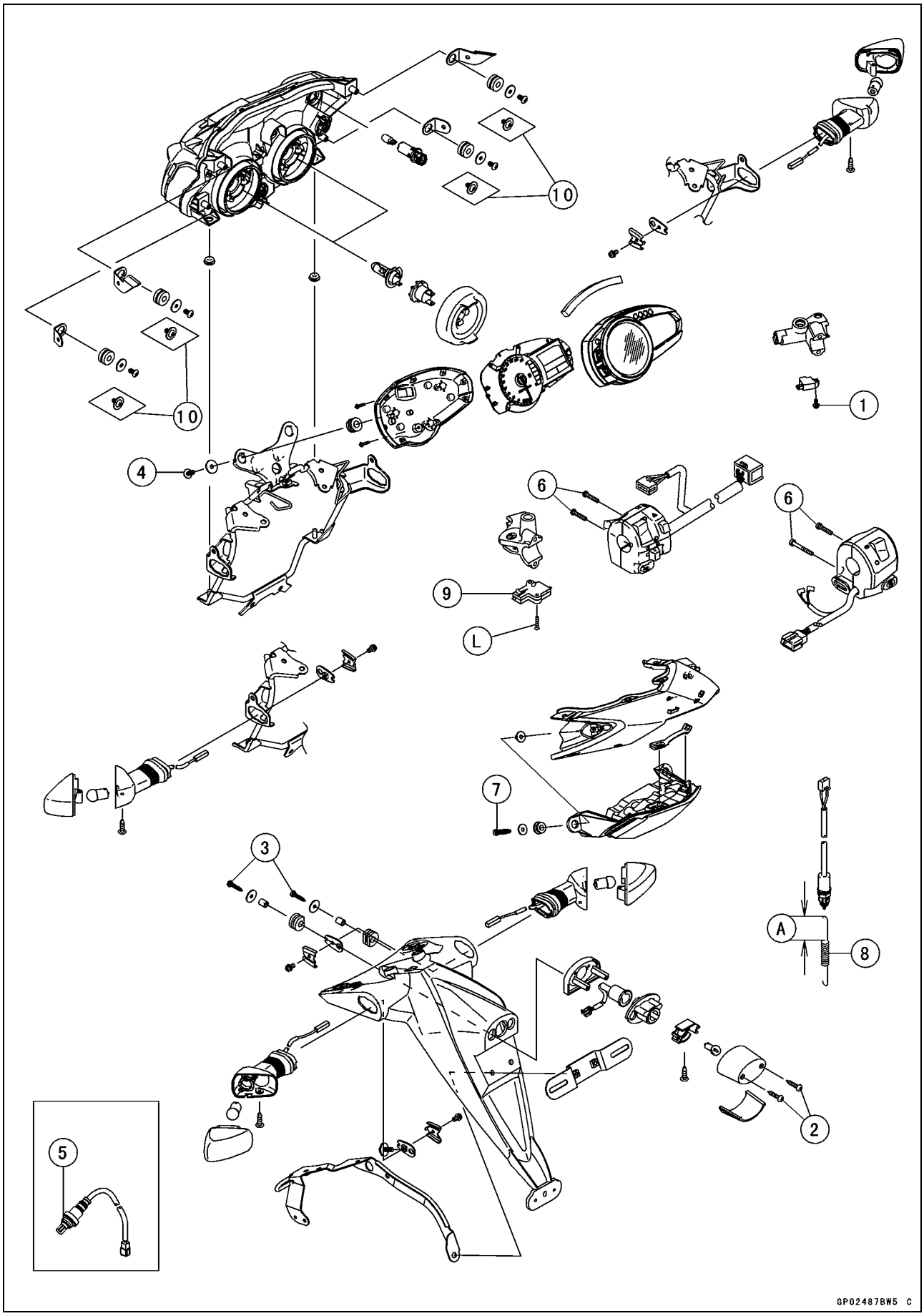

Exploded View

No.	Fastener	Torque			Remarks
		N·m	kgf·m	ft·lb	
1	Front Brake Light Switch Screw	1.2	0.12	11 in·lb	
2	License Plate Light Cover Mounting Screws	0.9	0.09	8.0 in·lb	
3	License Plate Light Mounting Screws	1.2	0.12	11 in·lb	
4	Meter Mounting Screws	1.2	0.12	11 in·lb	
5	Oxygen Sensor	44.1	4.50	32.5	
6	Switch Housing Screws	3.5	0.36	31 in·lb	
7	Tail/Brake Light Mounting Screws	1.2	0.12	11 in·lb	

8. Install the rear brake light switch spring so that the longer side [A] faces upward.
9. Starter Lockout Switch
L: Apply a non-permanent locking agent.

Specifications

Item	Standard
Battery	
Type	Sealed Battery
Model Name	YTX9-BS
Capacity	12 V 8 Ah
Voltage	12.8 V or more
Charging System	
Type	Three-phase AC
Alternator Output Voltage	39 V or more at 4 000 r/min (rpm)
Stator Coil Resistance	0.18 ~ 0.28 Ω at 20°C (68°F)
Charging Voltage (Regulator/Rectifier Output Voltage)	14.2 ~ 15.2 V
Ignition System	
Crankshaft Sensor Resistance	376 ~ 564 Ω
Crankshaft Sensor Peak Voltage	2.0 V or more
Camshaft Position Sensor Resistance	400 ~ 460 Ω at 20°C (68°F)
Camshaft Position Sensor Peak Voltage	0.2 V or more
Stick Coil:	
Primary Winding Resistance	1.1 ~ 1.5 Ω
Secondary Winding Resistance	10.8 ~ 16.2 kΩ
Primary Peak Voltage	100 V or more
Spark Plug:	
Type	NGK CR9EK
Gap	0.7 ~ 0.8 mm (0.028 ~ 0.031 in.)
Electric Starter System	
Starter Motor:	
Brush Length	12 mm (0.47 in.) (Service limit: 8.5 mm, 0.33 in.)
Commutator Diameter	28 mm (1.10 in.) (Service limit: 27 mm, 1.06 in.)
Air Switching Valve	
Resistance	18 ~ 22 Ω at 20°C (68°F)
Switches and Sensors	
Rear Brake Light Switch Timing	ON after about 10 mm (0.39 in.) pedal travel
Engine Oil Pressure Switch Connections	When engine is stopped: ON When engine is running: OFF
Water Temperature Sensor Resistance	in the text
Fuel Level Sensor Resistance:	
Full Position	9 ~ 13 Ω
Empty Position	90 ~ 100 Ω

Special Tools and Sealant

Hand Tester:
57001-1394

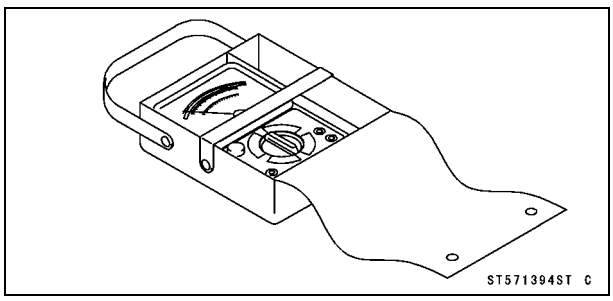

Flywheel Puller Assembly, M38 × 1.5/M35 × 1.5:
57001-1405

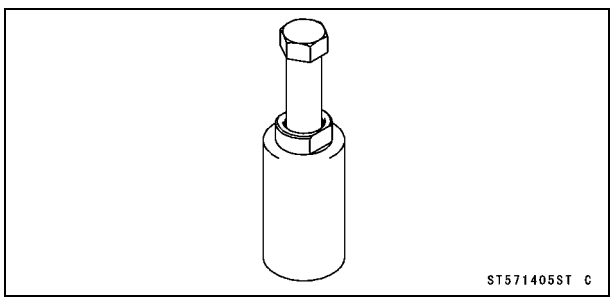

Peak Voltage Adapter:
57001-1415

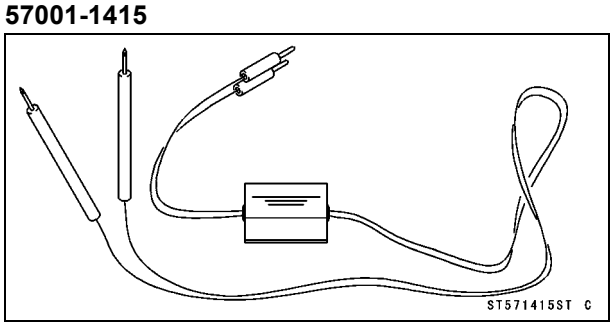

Key Registration Unit:
57001-1582

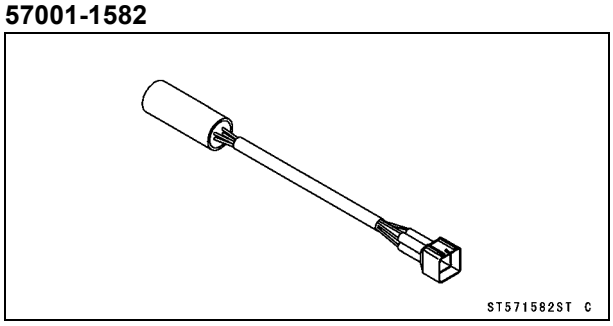

Grip:
57001-1591

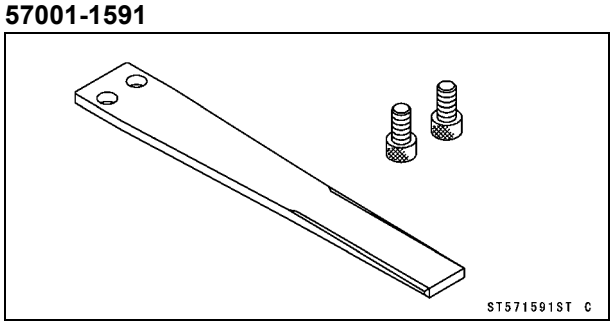

Flywheel & Pulley Holder:
57001-1605

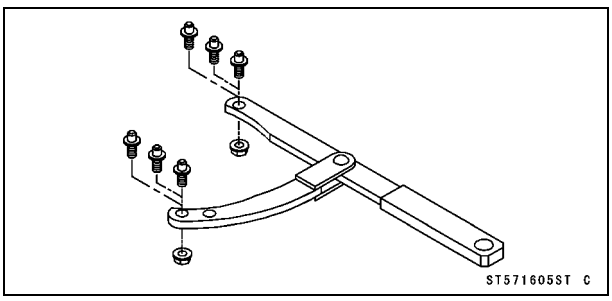

Stopper:
57001-1679

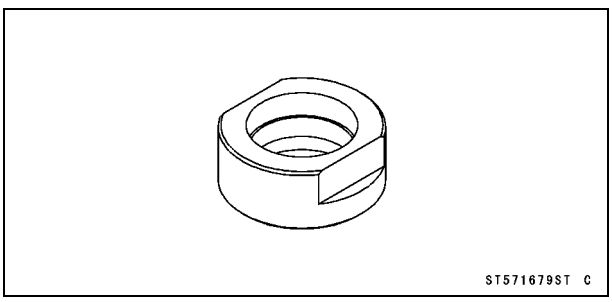

Rotor Holder:
57001-1690

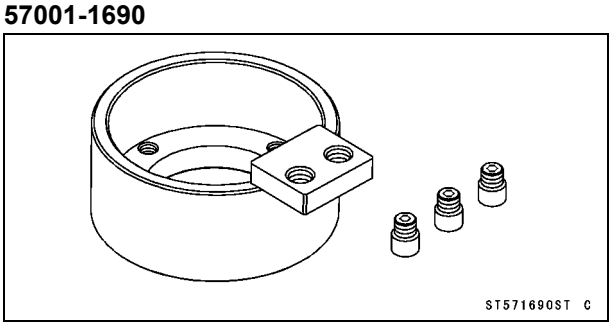

Key Registration Adapter:
57001-1746

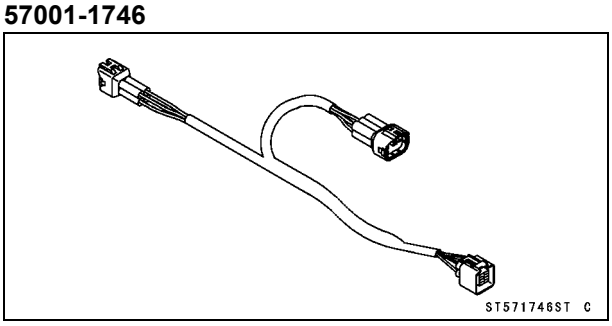

Liquid Gasket, TB1211F:
92104-0004

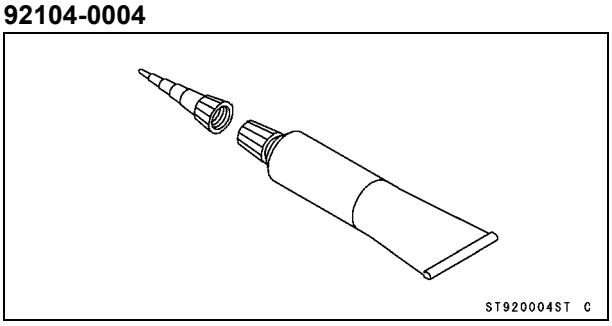

Parts Location

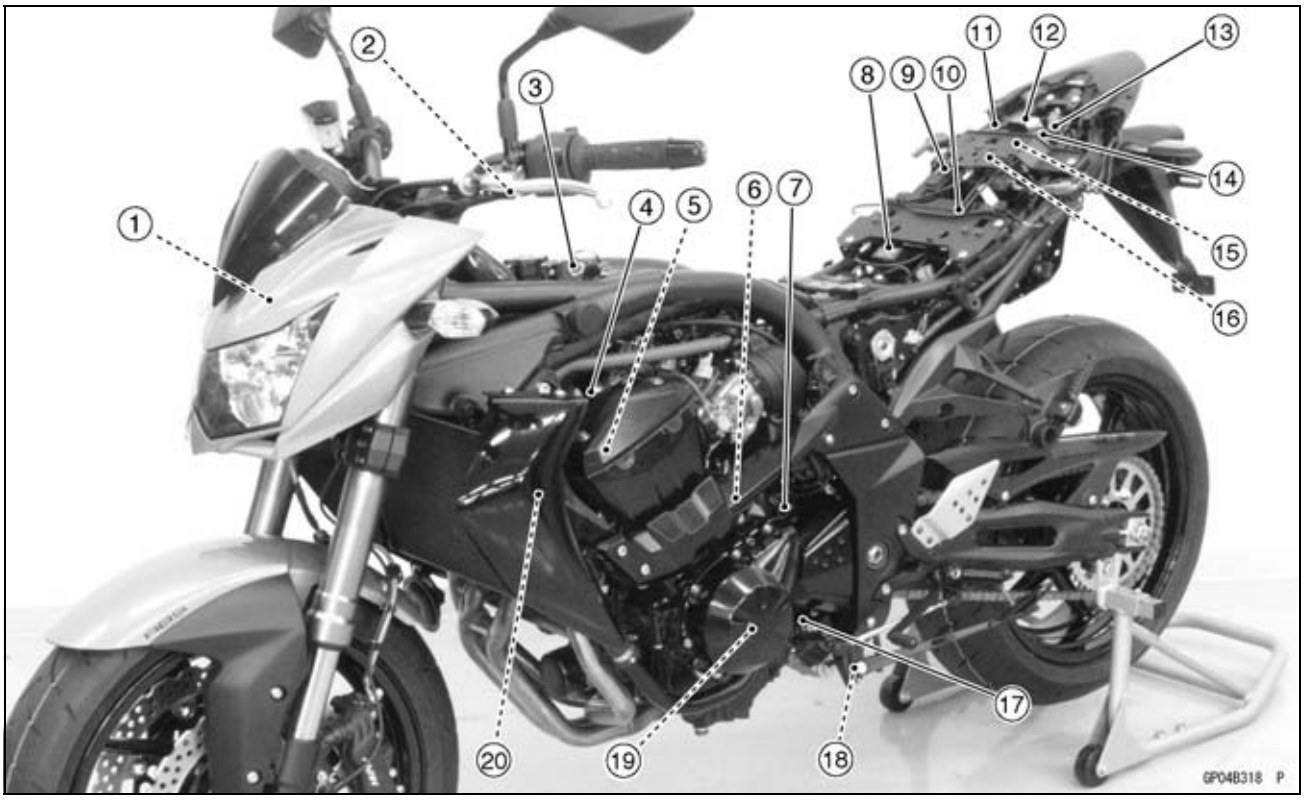

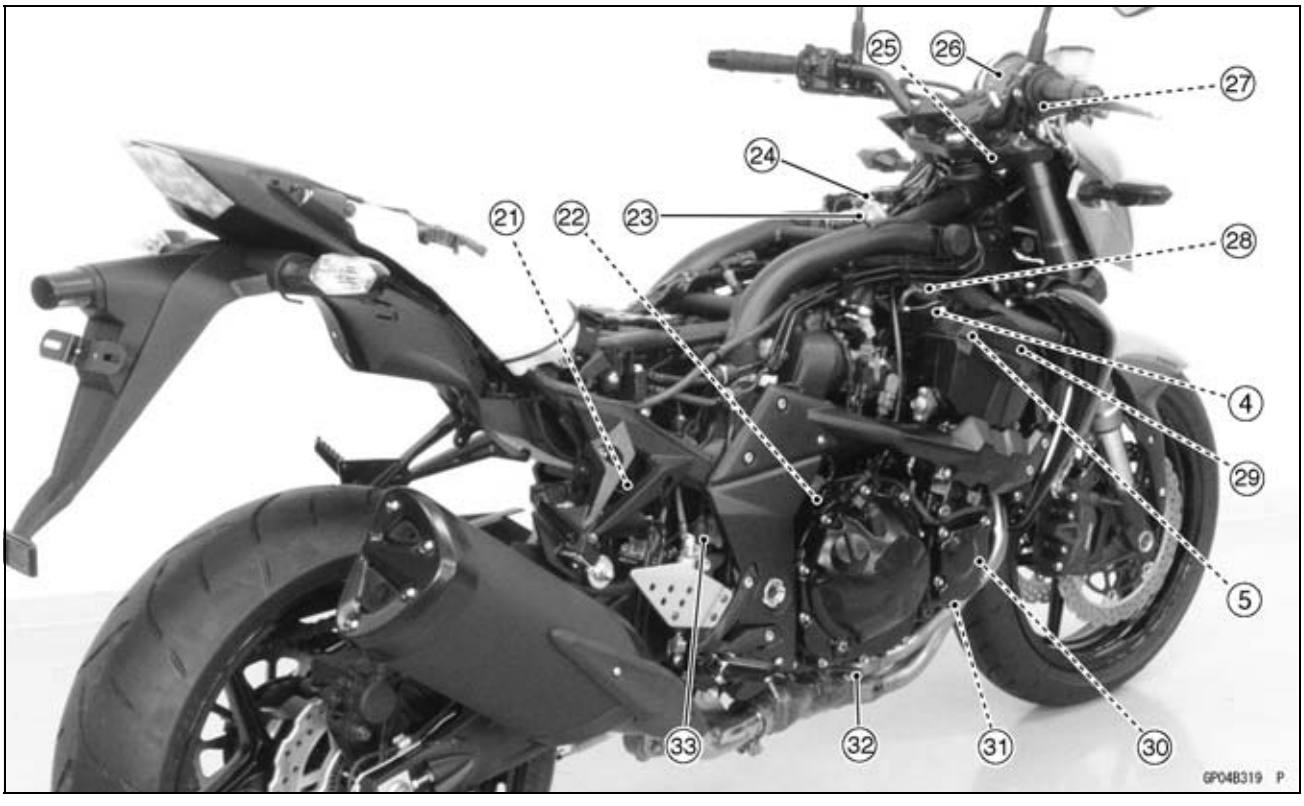

Parts Location

1. Immobilizer Amplifier
2. Starter Lockout Switch
3. Frame Ground
4. Stick Coils
5. Spark Plugs
6. Starter Motor
7. Speed Sensor
8. Fuse Box 1
9. Starter Relay
10. Battery 12 V 8 Ah
11. Turn Signal Relay
12. Fuse Box 2
13. Vehicle-down Sensor
14. Kawasaki Diagnostic System Connector
15. Relay Box
16. ECU
17. Neutral Switch
18. Sidestand Switch
19. Alternator
20. Camshaft Position Sensor
21. Regulator/Rectifier
22. Engine Ground
23. Water Temperature Sensor
24. Meter Ground
25. Ignition Switch
26. Meter Unit
27. Front Brake Light Switch
28. Air Switching Valve
29. Radiator Fan Motor
30. Crankshaft Sensor
31. Oil Pressure Switch
32. Oxygen Sensor
33. Rear Brake Light Switch

Wiring Diagram

ZR750N Model

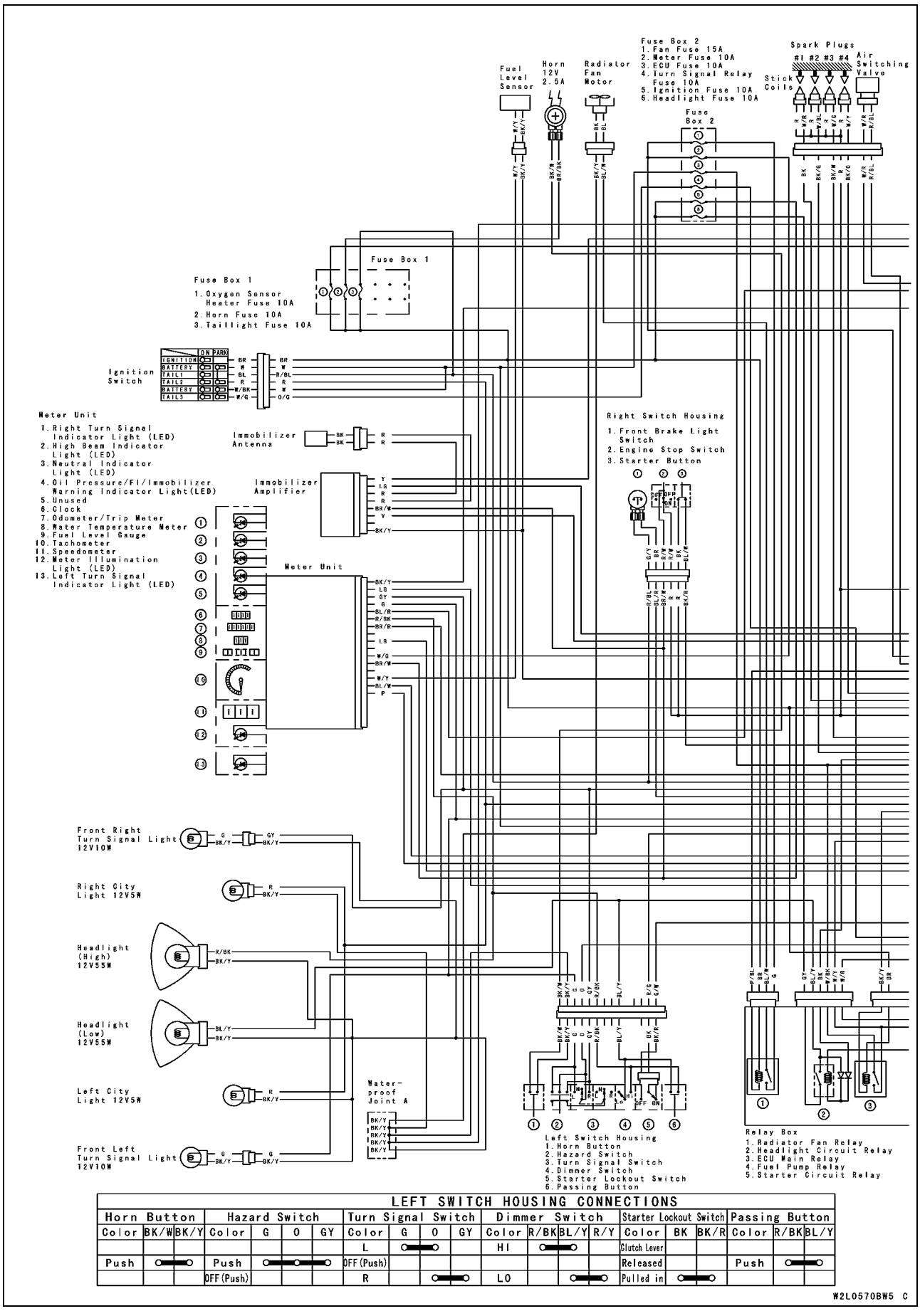

LEFT SWITCH HOUSING CONNECTIONS

Horn Button			Hazard Switch				Turn Signal Switch				Dimmer Switch				Starter Lockout Switch			Passing Button		
Color	BK/W	BK/Y	Color	G	O	GY	Color	G	O	GY	Color	R/BK	BL/Y	R/Y	Color	BK	BK/R	Color	R/BK	BL/Y
							L	●	●		HI	●	●		Clutch Lever					
Push	●	●	Push	●	●	●	OFF (Push)								Released			Push	●	●
			OFF (Push)				R		●	●	LO		●	●	Pulled in	●	●			

Wiring Diagram

ZR750N Model

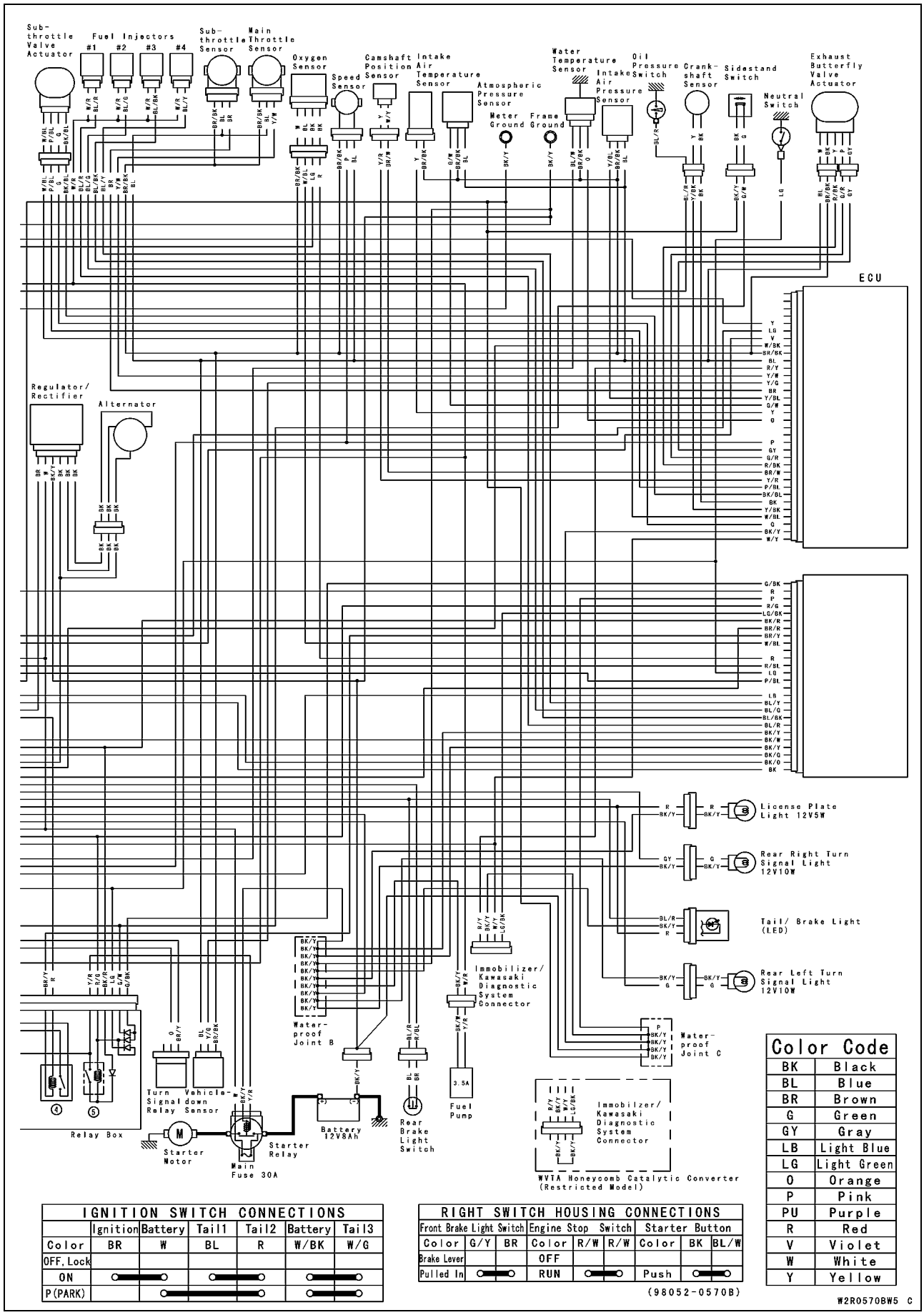

IGNITION SWITCH CONNECTIONS						
	Ignition	Battery	Tail1	Tail2	Battery	Tail3
Color	BR	W	BL	R	W/BK	W/G
OFF, Lock						
ON	●	●	●	●	●	●
P(PARK)		●	●	●	●	●

RIGHT SWITCH HOUSING CONNECTIONS								
Front Brake Light Switch			Engine Stop Switch			Starter Button		
Color	G/Y	BR	Color	R/W	R/W	Color	BK	BL/W
Brake Lever			OFF					
Pulled In	●	●	RUN	●	●	Push	●	●

(98052-0570B)

Color Code	
BK	Black
BL	Blue
BR	Brown
G	Green
GY	Gray
LB	Light Blue
LG	Light Green
O	Orange
P	Pink
PU	Purple
R	Red
V	Violet
W	White
Y	Yellow

W2R0570BW5 C

Wiring Diagram (ABS Equipped Models)

ZR750P Model

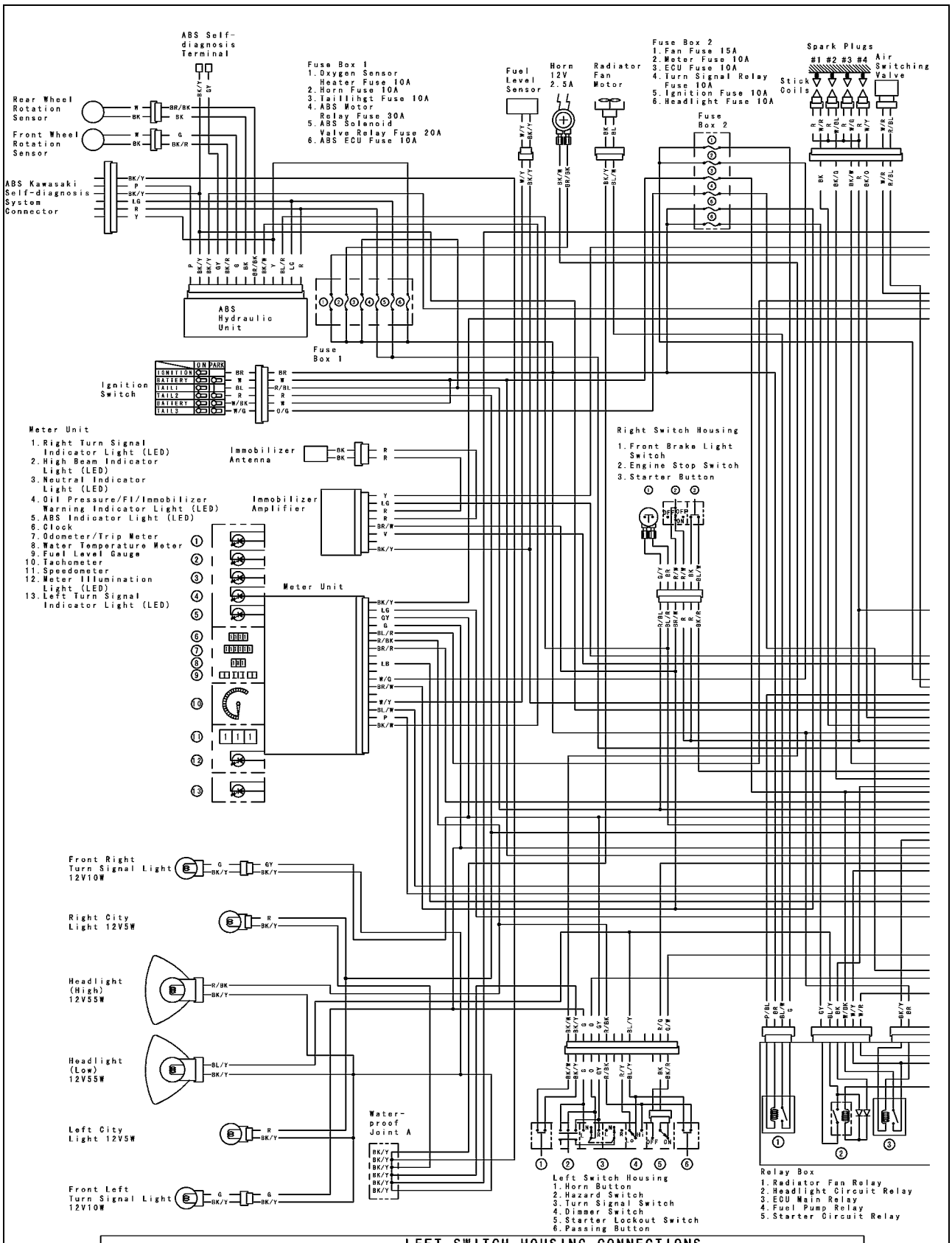

LEFT SWITCH HOUSING CONNECTIONS

Horn Button			Hazard Switch				Turn Signal Switch				Dimmer Switch				Starter Lockout Switch			Passing Button		
Color	BK/W	BK/Y	Color	G	O	GY	Color	G	O	GY	Color	R/BK	BL/Y	R/Y	Color	BK	BK/R	Color	R/BK	BL/Y
							L	○	●		HI	○	●		Clutch Lever					
Push	○	●	Push	○	●	●	OFF (Push)								Released			Push	○	●
			OFF (Push)				R		○	●	LO		○	●	Pulled in	○	●			

Wiring Diagram (ABS Equipped Models)

ZR750P Model

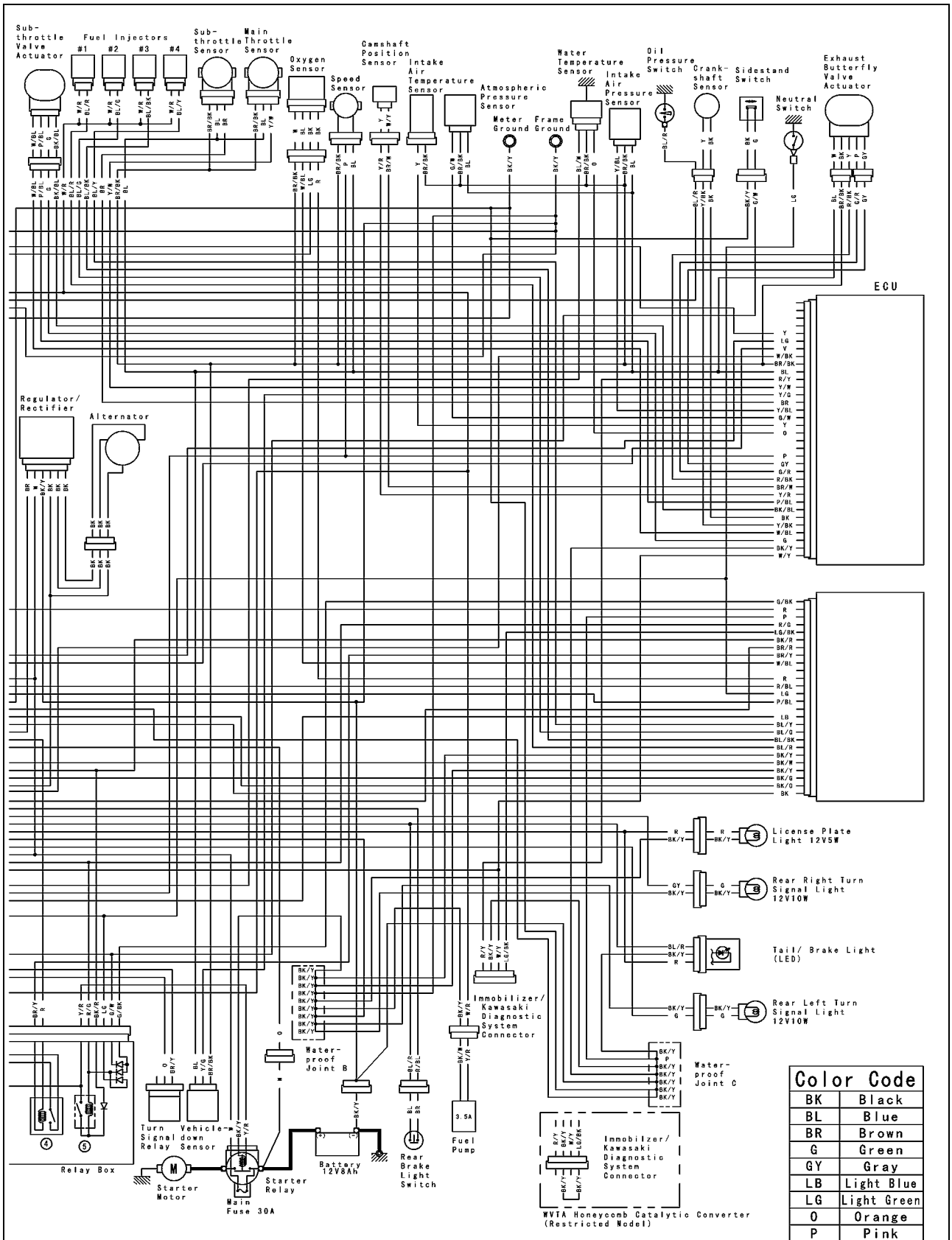

Color Code	
BK	Black
BL	Blue
BR	Brown
G	Green
GY	Gray
LB	Light Blue
LG	Light Green
O	Orange
P	Pink
PU	Purple
R	Red
V	Violet
W	White
Y	Yellow

IGNITION SWITCH CONNECTIONS

	Ignition	Battery	Tail1	Tail2	Battery	Tail3
Color	BR	W	BL	R	W/BK	W/G
OFF, Lock						
ON	●	●	●	●	●	●
P(PARK)		●	●	●	●	●

RIGHT SWITCH HOUSING CONNECTIONS

Front Brake Light Switch			Engine Stop Switch			Starter Button		
Color	G/Y	BR	Color	R/W	R/W	Color	BK	BL/W
Brake Lever			OFF					
Pulled In	●	●	RUN	●	●	Push	●	●

(98052-0572B)

W2R0572BW5 C

Precautions

There are a number of important precautions that are musts when servicing electrical systems. Learn and observe all the rules below.

- ○Do not reverse the battery cable connections. This will burn out the diodes on the electrical parts.
- ○Always check battery condition before condemning other parts of an electrical system. A fully charged battery is a must for conducting accurate electrical system tests.
- ○The electrical parts should never be struck sharply, as with a hammer, or allowed to fall on a hard surface. Such a shock to the parts can damage them.
- ○To prevent damage to electrical parts, do not disconnect the battery cables or any other electrical connections when the ignition switch is ON, or while the engine is running.
- ○Because of the large amount of current, never keep the starter button pushed when the starter motor will not turn over, or the current may burn out the starter motor windings.
- ○Take care not to short the cables that are directly connected to the battery positive (+) terminal to the chassis ground.
- ○Troubles may involve one or in some cases all items. Never replace a defective part without determining what CAUSED the failure. If the failure was caused by some other item or items, they must be repaired or replaced, or the new replacement will soon fail again.
- ○Make sure all connectors in the circuit are clean and tight, and examine wires for signs of burning, fraying, etc. Poor wires and bad connections will affect electrical system operation.
- ○Measure coil and winding resistance when the part is cold (at room temperature).

Electrical Wiring

Wiring Inspection

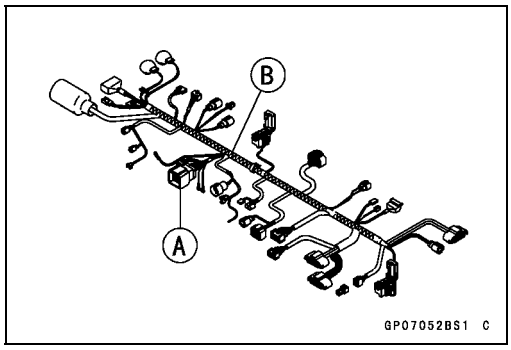

- Visually inspect the wiring for signs of burning, fraying, etc.

★If any wiring is poor, replace the damaged wiring.

- Pull each connector [A] apart and inspect it for corrosion, dirt, and damage.

★If the connector is corroded or dirty, clean it carefully. If it is damaged, replace it.

- Check the wiring for continuity.

○Use the wiring diagram to find the ends of the lead which is suspected of being a problem.

○Connect the hand tester between the ends of the leads.

Special Tool - Hand Tester: 57001-1394

○Set the tester to the × 1 Ω range, and read the tester.

★If the tester does not read 0 Ω, the lead is defective. Replace the lead or the wiring harness [B] if necessary.

Battery

Battery Removal

- Turn off the ignition switch.
- Remove:
  Seats (see Rear/Front Seat Removal in the Frame chapter)
  Front Seat Cover (see Seat Cover Removal in the Frame chapter)
  Bolts [A] and Front Seat Bracket [B]

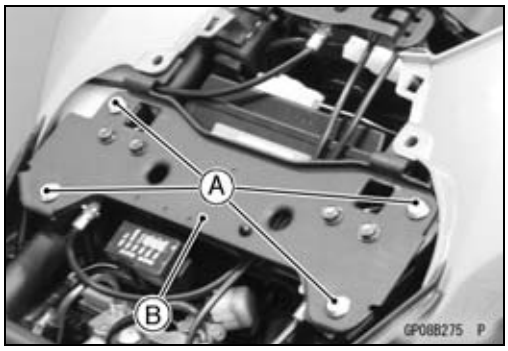

- Push the stopper [A] and pull up the fuse box from the front seat bracket [B].

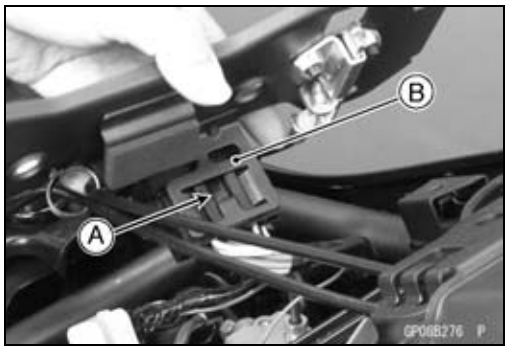

- Disconnect the ground lead connector [A].
- Take out the battery from the rear fender.

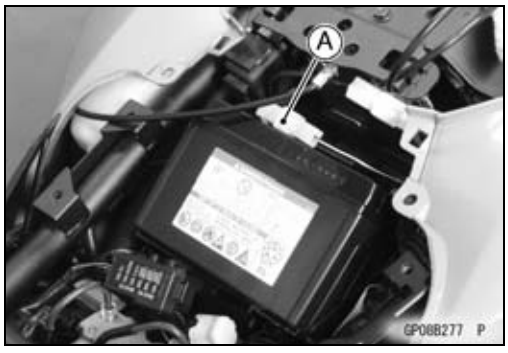

- Slide out the negative (–) terminal cap [A] and disconnect the negative (–) cable.

NOTICE
Be sure to disconnect the negative (–) cable first.

- Slide out the positive (+) terminal cap [B] and disconnect the positive (+) cable.
- Remove the battery.

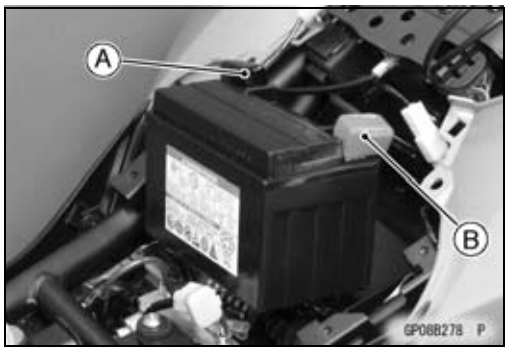

Battery Installation

- Turn off the ignition switch.
- Install the positive (+) cable [A] first.
- Install the negative (–) cable [B].
- Apply a light coat of grease on the terminals to prevent corrosion.
- Cover the terminals with the caps.
- Put the battery into the rear fender.

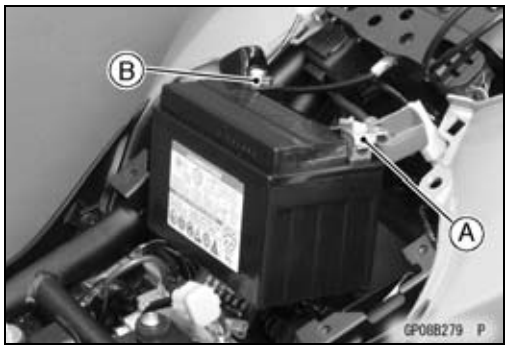

Battery

- Slide in the fuse box [A] into the front seat bracket [B] until the stopper [C] fits in the bracket.

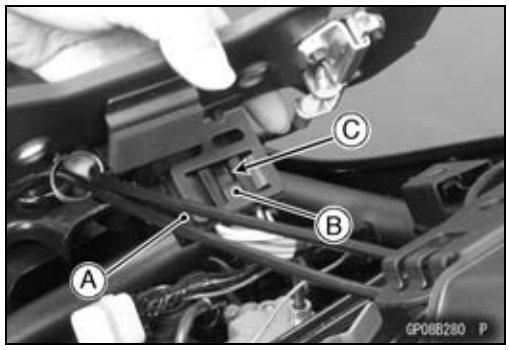

- Run the seat lock cable [A] under the front seat bracket [B] and then install the bracket.
  - ○Tighten the left side bolts [C] of the front seat bracket first.
- Confirm that the clamp [D] for the front seat lock cables [E] is in the front seat bracket.

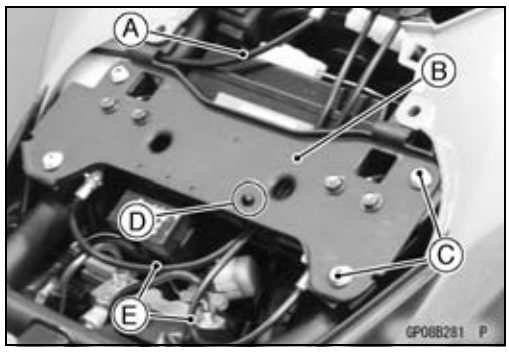

Battery Activation

Electrolyte Filling

- Make sure that the model name [A] of the electrolyte container matches the model name [B] of the battery. These names must be the same.

Battery Model Name

ZR750N/P: YTX9-BS

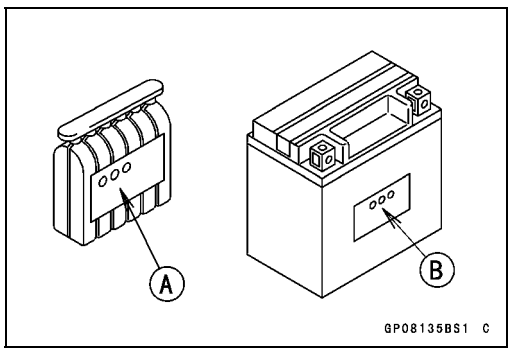

NOTICE

Be sure to use the electrolyte container with the same model name as the battery since the electrolyte volume and specific gravity vary with the battery type. This is to prevent overfilling of the electrolyte, shorting the battery life, and deterioration of the battery performance.

NOTICE

Do not remove the aluminum sealing sheet [A] from the filler ports [B] until just prior to use. Be sure to use the dedicated electrolyte container for correct electrolyte volume.

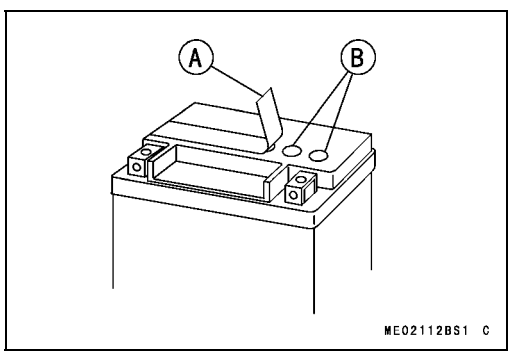

- Place the battery on a level surface.
- Check to see that the sealing sheet has no peeling, tears, or holes in it.
- Remove the sealing sheet.

NOTE

○*The battery is vacuum sealed. If the sealing sheet has leaked air into the battery, it may require a longer initial charge.*

Battery

- Remove the electrolyte container from the vinyl bag.
- Detach the strip of caps [A] from the container and set aside, these will be used later to seal the battery.

NOTE

○*Do not pierce or otherwise open the sealed cells [B] of the electrolyte container. Do not attempt to separate individual cells.*

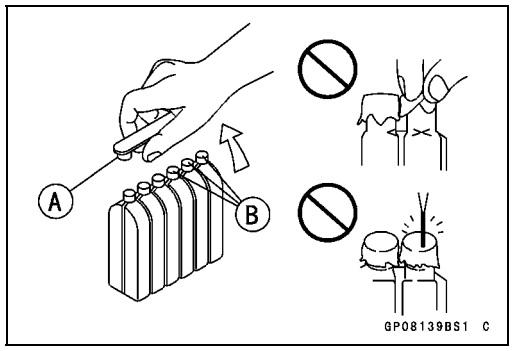

- Place the electrolyte container upside down with the six sealed cells into the filler ports of the battery. Hold the container level, push down to break the seals of all six cells. You will see air bubbles rising into each cell as the ports fill.

NOTE

○*Do not tilt the electrolyte container.*

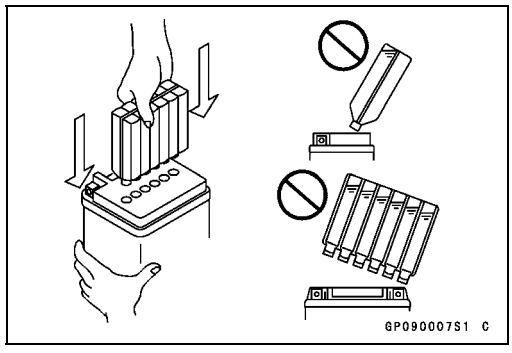

- Check the electrolyte flow.

★If no air bubbles [A] are coming up from the filler ports, or if the container cells have not emptied completely, tap the container [B] a few times.

NOTE

○*Be careful not to have the battery fall down.*

- Keep the container in place. Don't remove the container from the battery, the battery requires all the electrolyte from the container for proper operation.

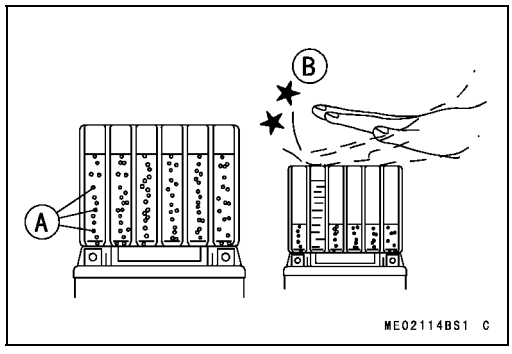

NOTICE

Removal of the container before it is completely empty can shorten the service life of the battery.

- After filling, let the battery sit for 20 ~ 60 minutes with the electrolyte container kept in place, which is required for the electrolyte to fully permeate into the plates.
- Make sure that the container cells have emptied completely, and remove the container from the battery.

Battery

- Place the strip of caps [A] loosely over the filler ports, press down firmly with both hands to seat the strip of caps into the battery (don't pound or hammer). When properly installed, the strip of caps will be level with the top of the battery.

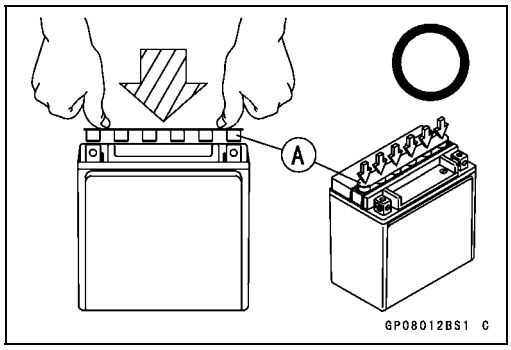

NOTICE

Once the strip of caps is installed onto the battery, never remove the caps, nor add water or electrolyte to the battery.

NOTE

○*Charging the battery immediately after filling can shorten service life.*

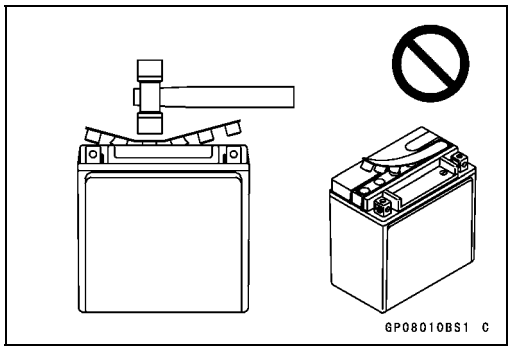

Initial Charge

- Newly activated sealed batteries require an initial charge.

  Standard Charge: 0.9 A × 5 ~ 10 hours

★If using a recommended battery charger, follow the charger's instructions for newly activated sealed battery.

Kawasaki-recommended chargers:

Battery Mate 150-9

OptiMate PRO 4-S/PRO S/PRO2

Yuasa MB-2040/2060

Christie C10122S

★If the above chargers are not available, use equivalent one.

- Let battery sit 30 minutes after initial charge, then check voltage using a voltmeter. (Voltage immediately after charging becomes temporarily high. For accurate measuring, let the battery sit for given time.)

NOTE

○*Charging rates will vary depending on how long the battery has been stored, temperature, and the type of charger used. If voltage is not at least 12.8 V, repeat charging cycle.*

○*To ensure maximum battery life and customer satisfaction, it is recommended the battery be load tested at three times its amp-hour rating for 15 seconds.*
Re-check voltage and if less than 12.8 V repeat the charging cycle and load test. If still below 12.8 V the battery is defective.

Battery

Precautions

1) No need of topping-up
   No topping-up is necessary in this battery until it ends its life under normal use. Forcibly prying off the seal cap to add water is very dangerous. Never do that.
2) Refreshing charge.
   If an engine will not start, a horn sounds weak, or lamps are dim, it indicates the battery has been discharged. Give refresh charge for 5 to 10 hours with charge current shown in the specification (see Refreshing Charge).
   When a fast charge is inevitably required, do it following precisely the maximum charge current and time conditions indicated on the battery.

NOTICE

This battery is designed to sustain no unusual deterioration if refresh-charged according to the method specified above. However, the battery's performance may be reduced noticeably if charged under conditions other than given above. Never remove the seal cap during refresh charge.
If by chance an excessive amount of gas is generated due to overcharging, the relief valve releases the gas to keep the battery normal.

3) When you do not use the motorcycle for months.
   Give a refresh charge before you store the motorcycle and store it with the negative cable removed. Give a refresh charge **once a month** during storage.
4) Battery life.
   If the battery will not start the engine even after several refresh charges, the battery has exceeded its useful life. Replace it (Provided, however, the vehicle's starting system has no problem).

⚠ DANGER

Batteries produce an explosive gas mixture of hydrogen and oxygen that can cause serious injury and burns if ignited. Keep the battery away from sparks and open flames during charging. When using a battery charger, connect the battery to the charger before turning on the charger. This procedure prevents sparks at the battery terminals which could ignite any battery gases. The electrolyte contains sulfuric acid. Be careful not to have it touch your skin or eyes. If touched, wash it off with liberal amount of water and seek medial attention for more severe burns.

Interchange

A sealed battery can fully display its performance only when combined with a proper vehicle electric system. Therefore, replace a sealed battery only on a motorcycle which was originally equipped with a sealed battery.

Be careful, if a sealed battery is installed on a motorcycle which had an ordinary battery as original equipment, the sealed battery's life will be shortened.

Charging Condition Inspection

○Battery charging condition can be checked by measuring battery terminal voltage with a digital voltmeter [A].

- Remove the battery (see Battery Removal).
- Disconnect the battery terminals.

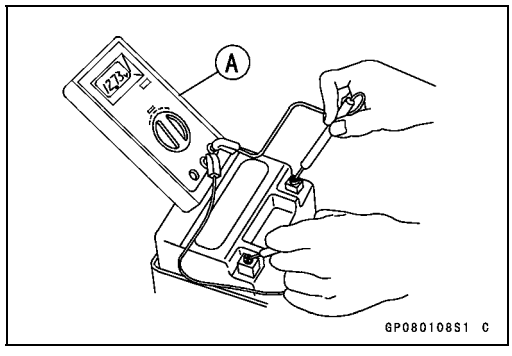

NOTICE

Be sure to disconnect the negative (–) cable first.

- Measure the battery terminal voltage.

NOTE

○*Measure with a digital voltmeter which can be read one decimal place voltage.*

Battery

★If the reading is 12.8 V or more, no refresh charge is required, however, if the read is below the specified, refresh charge is required.

Battery Terminal Voltage
Standard: 12.8 V or more

Terminal Voltage (V) [A]
Battery Charge Rate (%) [B]
Good [C]
Refresh charge is required [D]

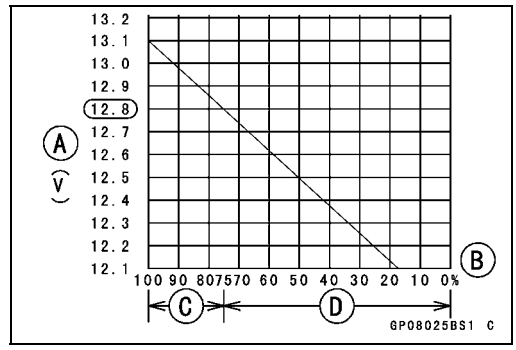

Refreshing Charge

- Remove the battery [A] (see Battery Removal).
- Do refresh charge by following method according to the battery terminal voltage.

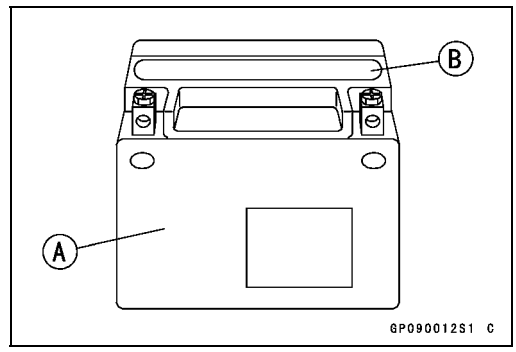

⚠ WARNING

This battery is sealed type. Never remove sealing cap [B] even at charging. Never add water. Charge with current and time as stated below.

Terminal Voltage: 11.5 ~ less than 12.8 V
Standard Charge 0.9 A × 5 ~ 10 h (see following chart)
Quick Charge 4 A × 1 h

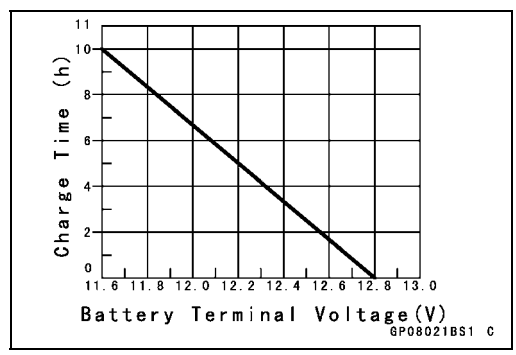

NOTICE

If possible, do not quick charge. If quick charge is done unavoidably, do standard charge later on.

Terminal Voltage: less than 11.5 V
Charging Method: 0.9 A × 20 h

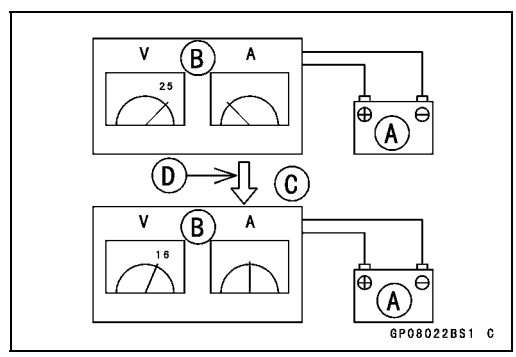

NOTE

○*Increase the charging voltage to a maximum voltage of 25 V if the battery will not accept current initially. Charge for no more than 5 minutes at the increased voltage then check if the battery is drawing current. If the battery will accept current decrease the voltage and charge by the standard charging method described on the battery case. If the battery will not accept current after 5 minutes, replace the battery.*

Battery [A]
Battery Charger [B]
Standard Value [C]
Current starts to flow [D]

- Determine the battery condition after refresh charge.

○Determine the condition of the battery left for 30 minutes after completion of the charge by measuring the terminal voltage according to the table below.

Criteria	Judgement
12.8 V or higher	Good
12.0 ~ lower than 12.8 V	Charge insufficient → Recharge
lower than 12.0 V	Unserviceable → Replace

Alternator Cover Removal

- Remove:
  Left Frame Cover (see Frame Cover Removal in the Frame chapter)
  Coolant (Drain, see Coolant Change in the Periodic Maintenance chapter)

- Support the engine with a suitable jack [A].
  Wooden Block [B]

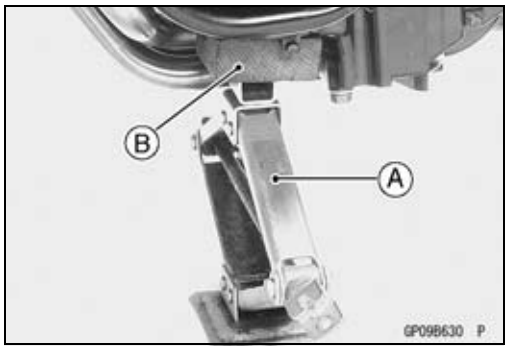

- Remove:
  Front Engine Mounting Bolt [A]
  Left Subframe Bolts [B]
  Left Subframe [C]

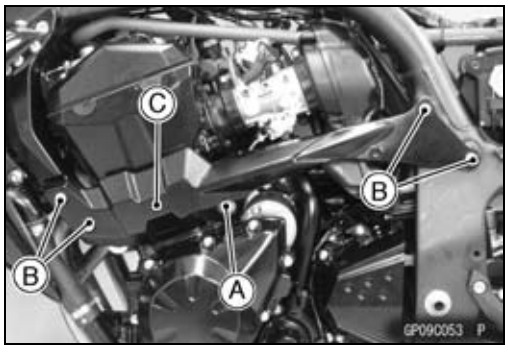

- Remove:
  Clamp Screw (Loosen) [A]
  Water Pipe Bolt [B]
  Water Pipe [C]

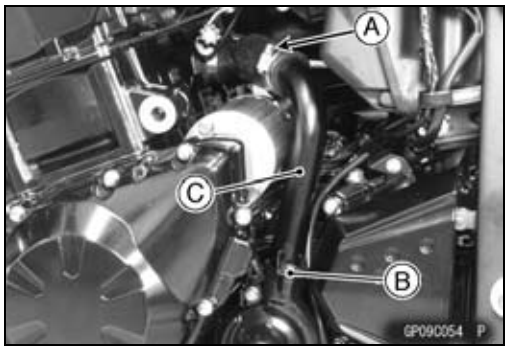

- Disconnect the alternator lead connector [A].
- Take out the alternator lead from the clamps [B].

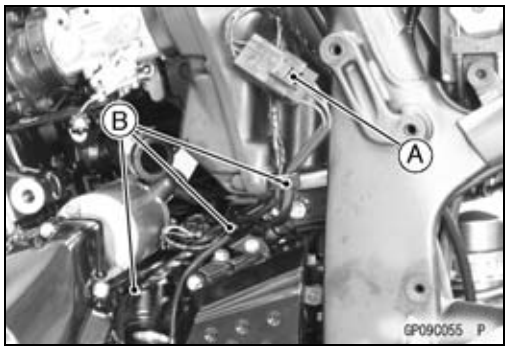

Charging System

- Place a suitable container under the alternator cover [A].
- Remove:
  Alternator Cover Bolts [B]
  Alternator Cover

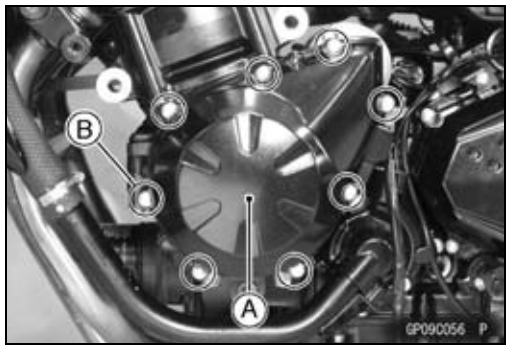

Alternator Cover Installation

- Using a high-flash point solvent, clean off any oil or dirt that may be on the silicone sealant coating area. Dry them with a clean cloth.
- Apply silicone sealant to the alternator lead grommet and crankcase halves mating surface [A] on the front and rear sides of the cover mount.

  Sealant - Liquid Gasket, TB1211F: 92104-0004
- Check that dowel pins [B] are in place on the crankcase.
- Install a new gasket and the alternator cover.
- Tighten:

  Torque - Alternator Cover Bolts: 11 N·m (1.1 kgf·m, 97 in·lb)

- Run the alternator lead [A] correctly (see Cable, Wire, and Hose Routing section in the Appendix chapter).
- ○Clamp the alternator lead with the clamps [B].
- Install the removed parts (see appropriate chapters).

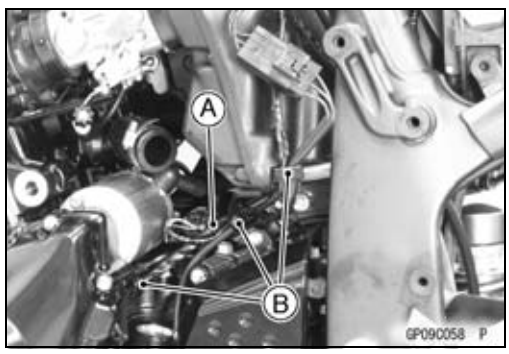

Stator Coil Removal

- Remove:
  Alternator Cover (see Alternator Cover Removal)
  Holding Plate Bolt [A] and Plate
  Alternator Lead Grommet [B]
  Stator Coil Bolts [C]
  Stator Coil [D]

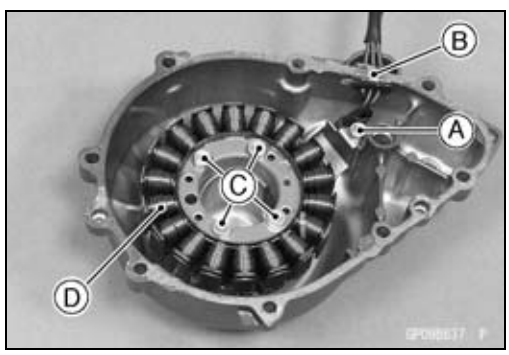

Stator Coil Installation

- Apply a non-permanent locking agent to the threads of the stator coil bolts and tighten them.

  Torque - Stator Coil Bolts: 12 N·m (1.2 kgf·m, 106 in·lb)

- Secure the alternator lead with a holding plate.
- Apply a non-permanent locking agent to the threads of the plate bolt and tighten it.

  Torque - Alternator Lead Holding Plate Bolt: 12 N·m (1.2 kgf·m, 106 in·lb)

- Using a high-flash point solvent, clean off any oil or dirt that may be on the silicone sealant coating area. Dry them with a clean cloth.
- Apply silicone sealant to the circumference of the alternator lead grommet, and fit the grommet into the notch of the cover securely.

  Sealant - Liquid Gasket, TB1211F: 92104-0004

- Install the alternator cover (see Alternator Cover Installation).

Alternator Rotor Removal

- Remove:
  Alternator Cover (see Alternator Cover Removal)
  Shaft [A]
  Starter Idle Gear [B]

- Hold the alternator rotor steady with the rotor holder [A] and stopper [B].
- Remove the rotor bolt [C] and washer.

  Special Tools - Grip [D]: 57001-1591
  Stopper: 57001-1679
  Rotor Holder: 57001-1690

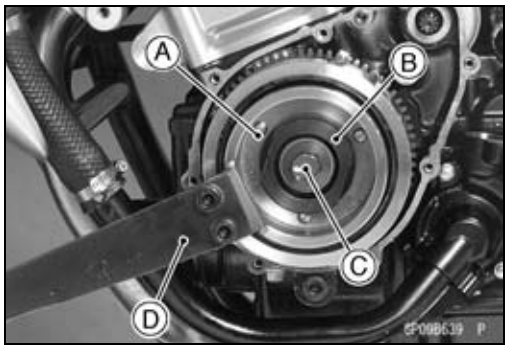

- Using the flywheel puller [A], remove the alternator rotor [B] from the crankshaft.

  Special Tool - Flywheel Puller Assembly, M38 × 1.5/M35 × 1.5: 57001-1405

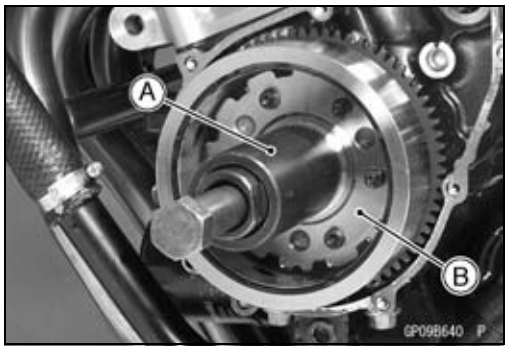

NOTICE

Do not attempt to strike the alternator rotor itself. Striking the rotor can cause the magnets to lose their magnetism.

Charging System

Alternator Rotor Installation

- Using a cleaning fluid, clean off any oil or dirt on the following portions and dry them with a clean cloth.
  Crankshaft Tapered Portion [A]
  Alternator Rotor Tapered Portion [B]
- Apply a thin coat of molybdenum disulfide grease to the crankshaft [C] and the face [D] of the starter clutch gear.

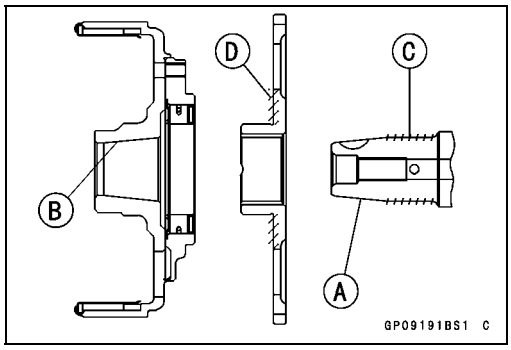

- Install the starter clutch gear [A].
- Again, clean the crankshaft tapered portion [B] and dry there.
- Fit the woodruff key [C] securely in the slot in the crankshaft before installing the alternator rotor.

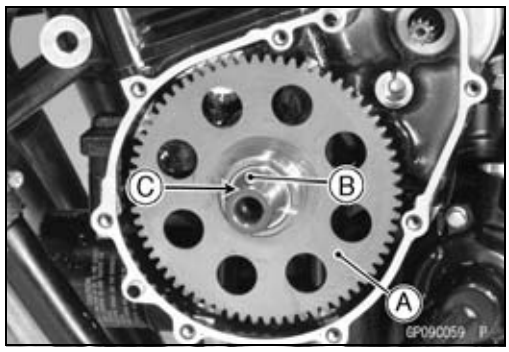

- Install the alternator rotor [A] while turning [B] the starter clutch gear [C].

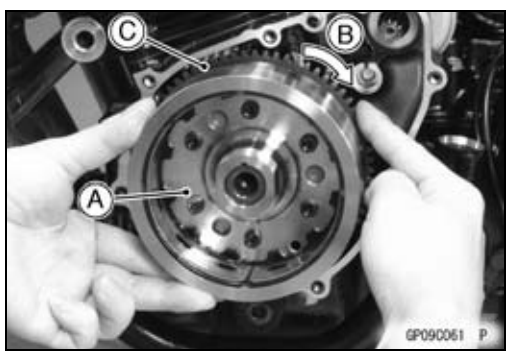

- Using a cleaning fluid, clean off any oil or dirt on the washer [A] and dry it with a clean cloth.

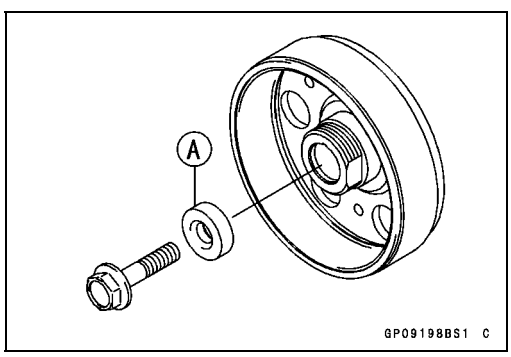

- Install the washer.

NOTE

○*Confirm the alternator rotor fit or not to the crankshaft before tightening it with specified torque.*

- Install the rotor bolt [A] and tighten it with 70 N·m (7.0 kgf·m, 52 ft·lb) of torque.

Special Tools - Grip [B]: 57001-1591
Stopper [C]: 57001-1679
Rotor Holder [D]: 57001-1690

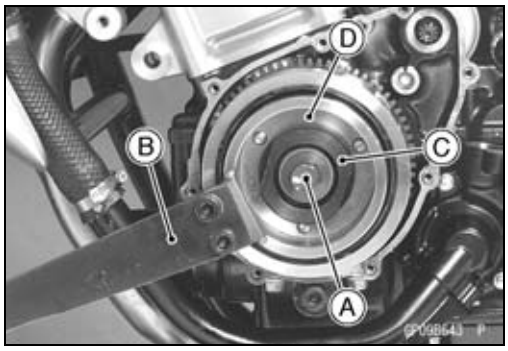

- Remove the rotor bolt and washer.
- Check the tightening torque with flywheel puller.

Special Tool - Flywheel Puller Assembly, M38 × 1.5/M35 × 1.5: 57001-1405

★If the rotor is not pulled out with 20 N·m (2.0 kgf·m, 15 ft·lb) of drawing torque, it is installed correctly.
★If the rotor is pulled out with under 20 N·m (2.0 kgf·m, 15 ft·lb) of drawing torque, clean off any oil dirt or flaw of the crankshaft and rotor tapered portion and washer, and dry them with a clean cloth. Then, confirm that it is not pulled out with above torque.

- Tighten the alternator rotor bolt while holding the alternator rotor steady with the rotor holder.

Special Tools - Grip: 57001-1591
Stopper: 57001-1679
Rotor Holder: 57001-1690

Torque - Alternator Rotor Bolt: 155 N·m (15.8 kgf·m, 114 ft·lb)

- Apply a thin coat of molybdenum disulfide grease to the shaft [A], and install it and starter idle gear [B].
- Install the alternator cover (see Alternator Cover Installation).

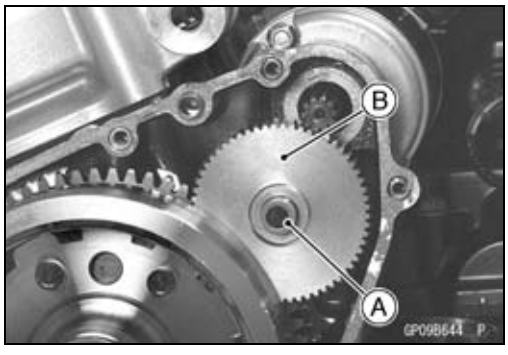

Alternator Inspection

There are three types of alternator failures: short, open (wire burned out), or loss in rotor magnetism. A short or open in one of the coil wires will result in either a low output, or no output at all. A loss in rotor magnetism, which may be caused by dropping or hitting the alternator, by leaving it near an electromagnetic field, or just by aging, will result in low output.

Charging System

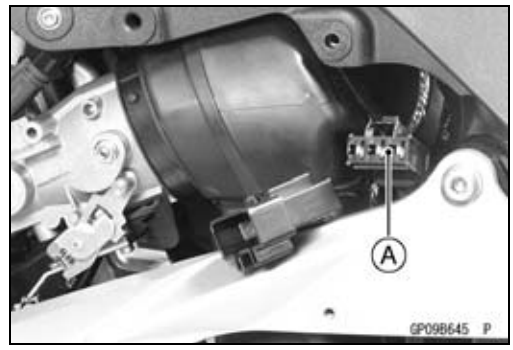

- To check the alternator output voltage, do the following procedures.

○Turn off the ignition switch.
○Remove the left frame cover (see Frame Cover Removal in the Frame chapter).
○Disconnect the alternator lead connector [A].
○Connect the hand tester as shown in the table 1.
○Start the engine.
○Run it at the rpm given in the table 1.
○Note the voltage readings (total 3 measurements).

Table 1 Alternator Output Voltage at 4 000 r/min (rpm)

Tester Range	Connections		Reading
	Tester (+) to	Tester (–) to	
250 V AC	One Black lead	Another Black lead	39 V or more

★If the output voltage shows the value in the table, the alternator operates properly.
★If the output voltage shows a much higher than the value in the table, the regulator/rectifier is damaged. A much lower reading than that given in the table indicates that the alternator is defective.

- Check the stator coil resistance as follows.

○Stop the engine.
○Connect the hand tester as shown in the table 2.
○Note the readings (total 3 measurements).

Table 2 Stator Coil Resistance at 20°C (68°F)

Tester Range	Connections		Reading
	Tester (+) to	Tester (–) to	
× 1 Ω	One Black lead	Another Black lead	0.18 ~ 0.28 Ω

★If there is more resistance than shown in the table, or no hand tester reading (infinity) for any two leads, the stator has an open lead and must be replaced. Much less than this resistance means the stator is shorted, and must be replaced.

- Using the highest resistance range of the hand tester, measure the resistance between each of the black leads and chassis ground.

★Any hand tester reading less than infinity (∞) indicates a short, necessitating stator replacement.
★If the stator coils have normal resistance, but the voltage check showed the alternator to be defective; then the rotor magnets have probably weakened, and the rotor must be replaced.

Special Tool - Hand Tester: 57001-1394

Regulator/Rectifier Inspection

- Remove:
  Upper Rear Shock Absorber Nut and Bolt (see Rear Shock Absorber Removal in the Suspension chapter)
  Bolts [A] and Bracket [B]
  Regulator/Rectifier Assembly [C]

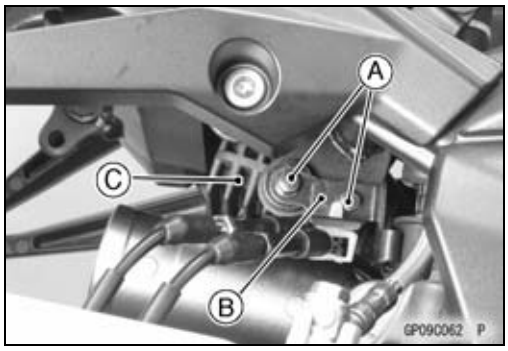

- Remove:
  Connector [A] (Disconnect)
  Regulator/Rectifier [B]

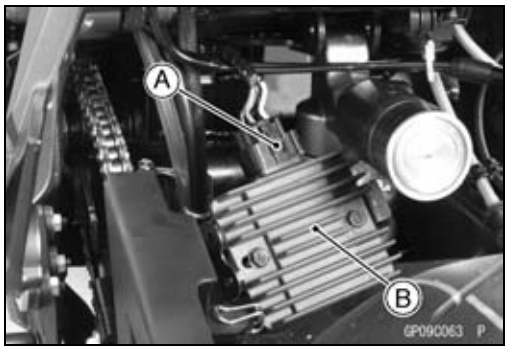

Rectifier Circuit Check

- Check conductivity of the following pair of terminals.

Rectifier Circuit Inspection

Tester connection	W-BK1,	W-BK2,	W-BK3
	BK/Y-BK1,	BK/Y-BK2,	BK/Y-BK3

★The resistance should be low in one direction and more than ten times as much in the other direction. If any two terminals are low or high in both directions, the rectifier is defective and the regulator/rectifier must be replaced.

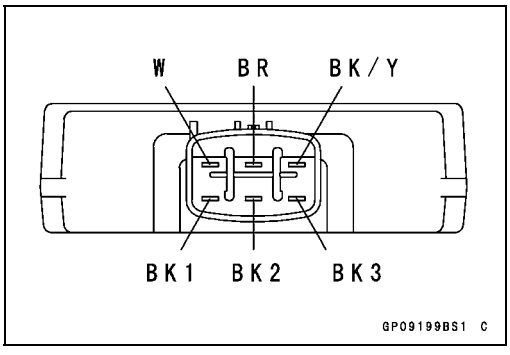

NOTE

○*The actual meter reading varies with the meter used and the individual rectifier, but, generally speaking the lower reading should be from zero to one half the scale.*

Regulator Circuit Check

To test the regulator out of circuit, use three 12 V batteries and a test light (12 V 3 ~ 6 W bulb in a socket with leads).

NOTICE

The test light works as an indicator and also a current limiter to protect the regulator/rectifier from excessive current. Do not use an ammeter instead of a test light.

- Check to be sure the rectifier circuit is normal before continuing.

Charging System

● Do the 1st step regulator circuit test.
○Connect the test light and the 12 V battery to the regulator/rectifier as shown in the figure.
○Check the BK1, BK2 and BK3 terminal respectively.
★If the test light turns on, the regulator/rectifier is defective. Replace it.
★If the test light does not turn on, continue the test.

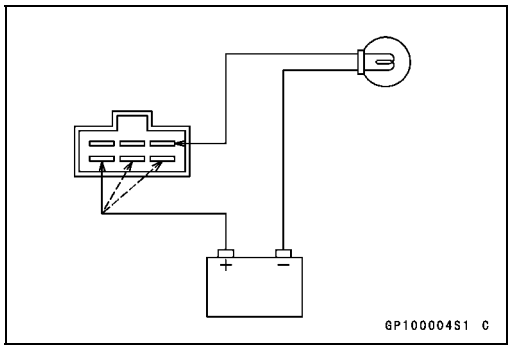

● Do the 2nd step regulator circuit test.
○Connect the test light and the 12 V battery in the same manner as specified in the “Regulator Circuit Test-1st Step”.
○Apply 12 V to the BR terminal.
○Check the BK1, BK2 and BK3 terminal respectively.
★If the test light turns on, the regulator/rectifier is defective. Replace it.
★If the test light does not turn on, continue the test.

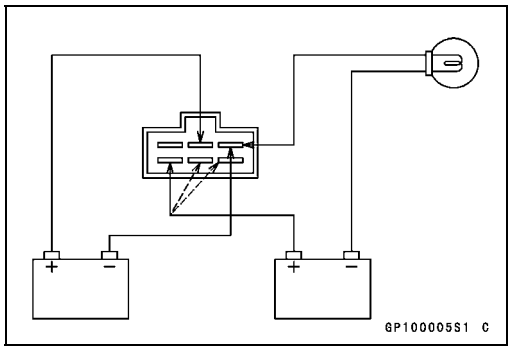

● Do the 3rd step regulator circuit test.
○Connect the test light and the 12 V battery in the same manner as specified in the “Regulator Circuit Test-1st Step”.
○Momentarily apply 24 V to the BR terminal by adding a 12 V battery.
○Check the BK1, BK2 and BK3 terminals respectively.

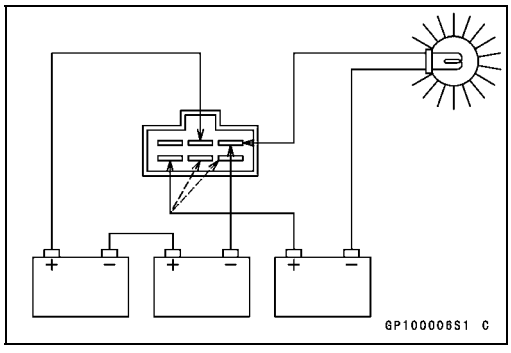

NOTICE

Do not apply more than 24 V. If more than 24 V is applied, the regulator/rectifier may be damaged. Do not apply 24 V more than a few seconds. If 24 V is applied for more than a few seconds, the regulator/rectifier may be damaged.

★If the test light did not light when the 24 V was applied momentarily to the voltage monitoring terminal, the regulator/rectifier is defective. Replace it.
★If the regulator/rectifier passes all of the tests described, it may still be defective. If the charging system still does not work properly after checking all of the components and the battery, test the regulator/rectifier by replacing it with a known good unit.

Charging Voltage Inspection

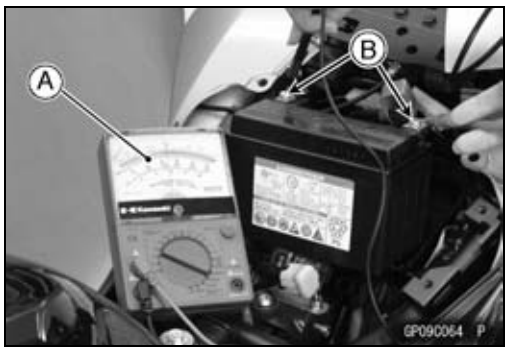

- Check the battery condition (see Charging Condition Inspection).
- Warm up the engine to obtain actual alternator operating conditions.
- Take out the battery from the rear fender with the cables connected (see Battery Removal).
- Check that the ignition switch is turned off, and connect the hand tester [A] to the battery terminals [B].

  Special Tool - Hand Tester: 57001-1394

- Start the engine, and note the voltage readings at various engine speeds with the headlight turned on and then turned off (To turn off the headlight, disconnect the headlight connector on the headlight unit.). The readings should show nearly battery voltage when the engine speed is low, and, as the engine speed rises, the readings should also rise. But they must be kept under the specified voltage.

Charging Voltage

Tester Range	Connections		Reading
	Tester (+) to	Tester (–) to	
25 V DC	Battery (+)	Battery (–)	14.2 ~ 15.2 V

- Turn off the ignition switch to stop the engine, and disconnect the hand tester.

★If the charging voltage is kept between the values given in the table, the charging system is considered to be working normally.

★If the charging voltage is much higher than the values specified in the table, the regulator/rectifier is defective or the regulator/rectifier leads are loose or open.

★If the charging voltage does not rise as the engine speed increases, then the regulator/rectifier is defective or the alternator output is insufficient for the loads. Check the alternator and regulator/rectifier to determine which part is defective.

Charging System

Charging System Circuit

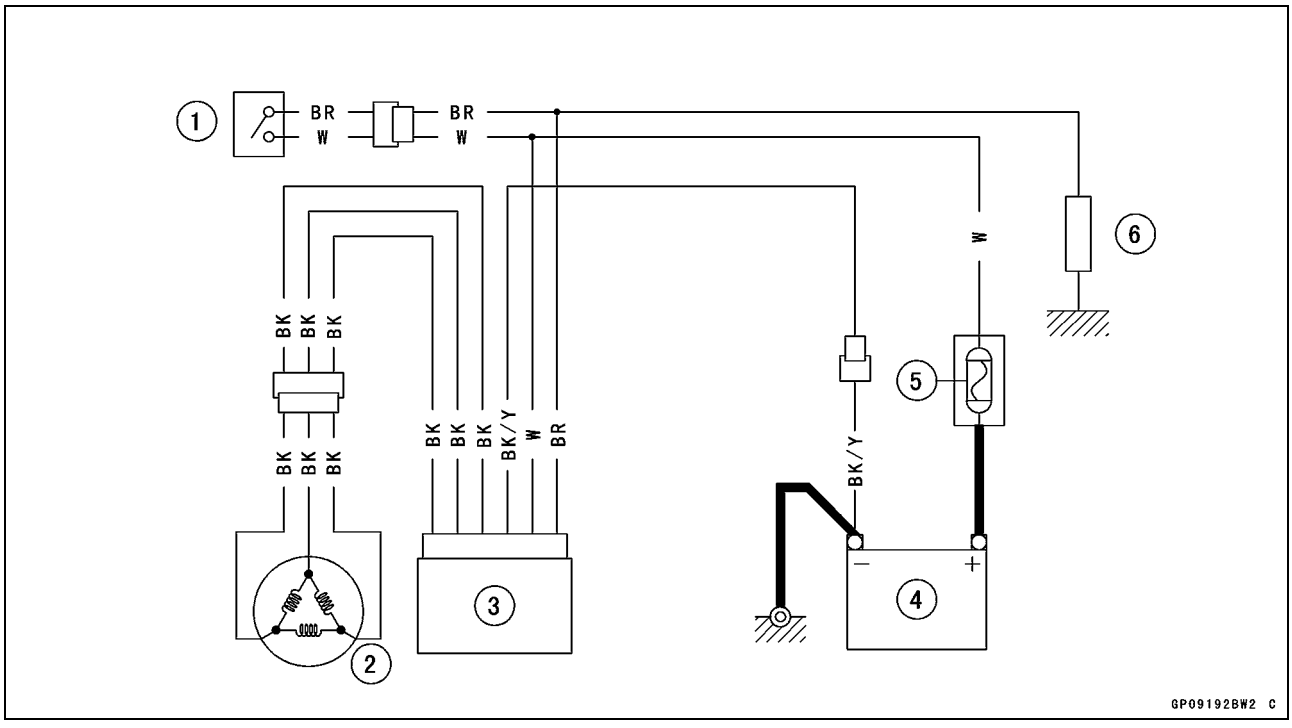

1. Ignition Switch
2. Alternator
3. Regulator/Rectifier
4. Battery 12 V 8 Ah
5. Main Fuse 30 A
6. Load

⚠ WARNING

The ignition system produces extremely high voltage. Do not touch the spark plug, ignition coil or ignition coil lead while the engine is running, or you could receive a severe electrical shock.

NOTICE

Do not disconnect the battery cables or any other electrical connections when the ignition switch is ON, or while the engine is running. This is to prevent ECU damage.
Do not install the battery backwards. The negative side is grounded. This is to prevent damage to the ECU.

Crankshaft Sensor Removal

NOTICE

Never drop the sensor, especially on a hard surface. Such a shock to the sensor can damage it.

- Remove:
  Right Frame Cover (see Frame Cover Removal in the Frame chapter)
  Bolt [A] and Connector Bracket

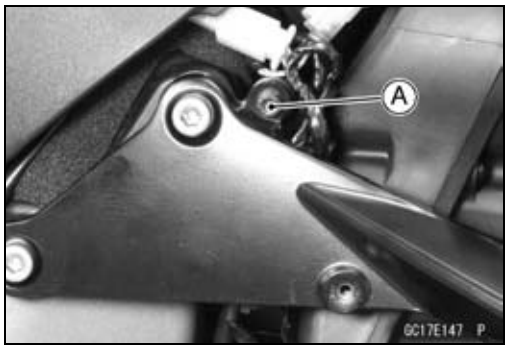

- Push the tongue [A] and take out the crankshaft sensor lead connector [B] from the bracket [C].

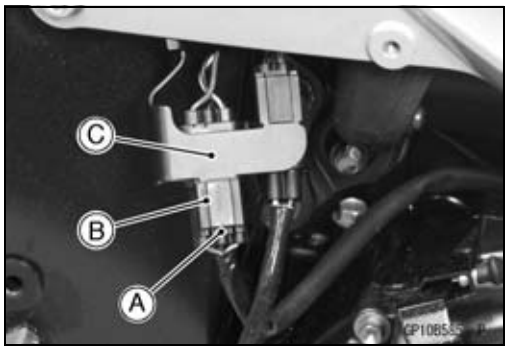

- Disconnect the crankshaft sensor lead connector [A].

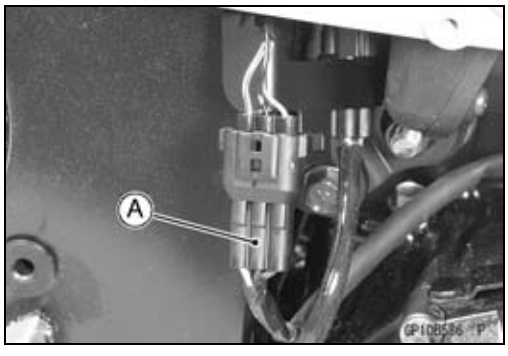

Ignition System

- Remove:
  Rubber Boot (Slide Out) [A]
  Oil Pressure Switch Lead Terminal [B]
  Crankshaft Sensor Cover Bolts [C] with Clamps
  Crankshaft Sensor Cover [D]

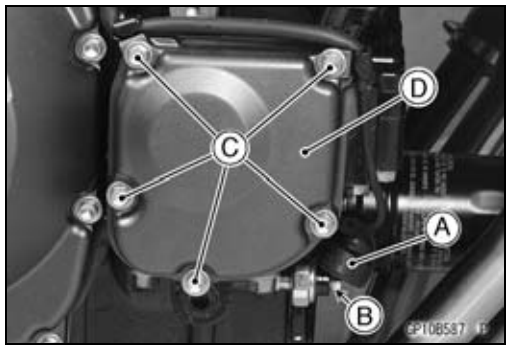

- Remove:
  Crankshaft Sensor Bolts [A]
  Crankshaft Sensor [B]

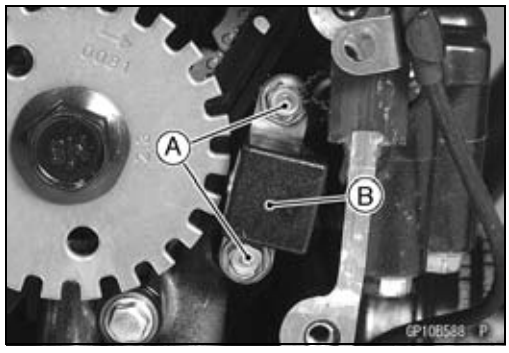

Crankshaft Sensor Installation

- Run the crankshaft sensor lead correctly (see Cable, Wire, and Hose Routing section in the Appendix chapter).
- Tighten:

  Torque - Crankshaft Sensor Bolts: 5.9 N·m (0.60 kgf·m, 52 in·lb)

- Using a high-flash point solvent, clean off any oil or dirt that may be on the silicone sealant coating area. Dry them with a clean cloth.
- Apply silicone sealant [A] to the crankshaft sensor lead grommet and crankcase halves mating surface on the front and rear sides of the crankshaft sensor cover mount.

  Sealant - Liquid Gasket, TB1211F: 92104-0004

- Apply high-temperature grease to the switch terminal [A] to prevent rust.

○Do not protrude the grease from the rubber boot [B].

- Install the oil pressure switch lead terminal securely.

○Install the lead terminal direction upward.

  Torque - Oil Pressure Switch Terminal Bolt: 2.0 N·m (0.20 kgf·m, 18 in·lb)

- Install the rubber boot and confirm the tube [C] is contact to the rubber boot.
- Install the removed parts (see appropriate chapters).

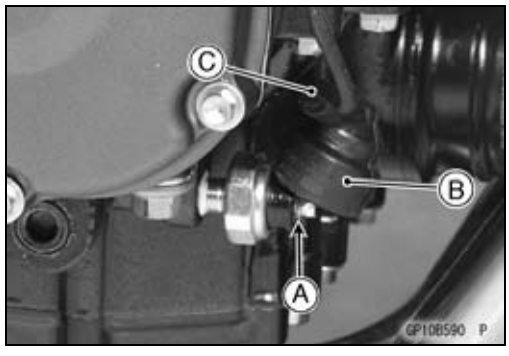

- Replace the O-ring in the crankshaft sensor cover [A] with a new one.
- Install:
  Crankshaft Sensor Cover
  Clamps [B]
- Tighten:

Torque - Crankshaft Sensor Cover Bolts: 11 N·m (1.1 kgf·m, 97 in·lb)

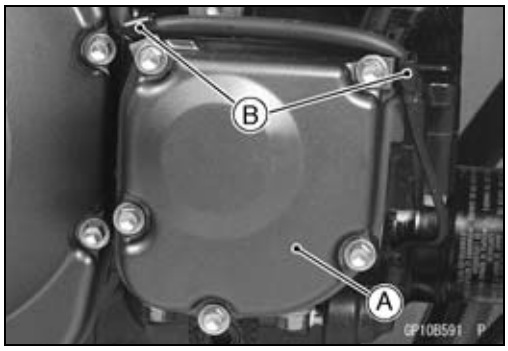

Crankshaft Sensor Inspection

- Remove:
  Right Frame Cover (see Frame Cover Removal in the Frame chapter)
  Crankshaft Sensor Lead Connector [A] (see Crankshaft Sensor Removal)
- Set the hand tester [B] to the × 100 Ω range and connect (+) lead to the yellow lead and (–) lead to the black lead in the connector.

Special Tool - Hand Tester: 57001-1394

Crankshaft Sensor Resistance: 376 ~ 564 Ω

★If there is more resistance than the specified value, the coil has an open lead and must be replaced. Much less than this resistance means the coil is shorted, and must be replaced.

- Using the highest resistance range of the tester, measure the resistance between the crankshaft sensor leads and chassis ground.

★Any tester reading less than infinity (∞) indicates a short, necessitating replacement of the crankshaft sensor assembly.

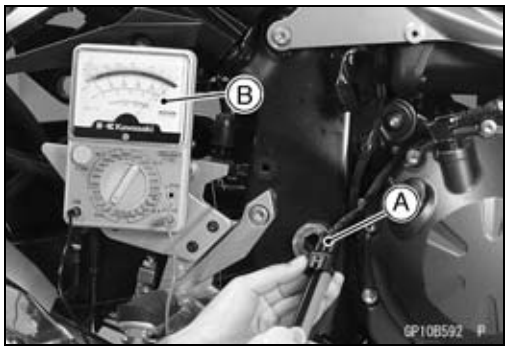

Ignition System

Crankshaft Sensor Peak Voltage Inspection

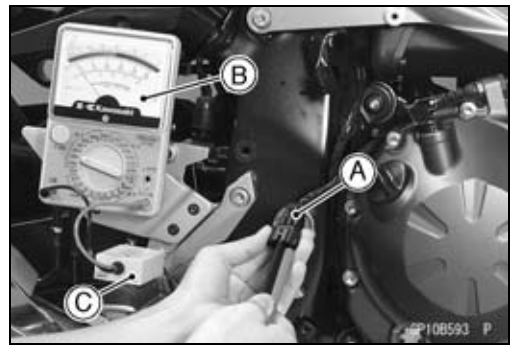

NOTE

○*Be sure the battery is fully charged.*

- Remove:
  Right Frame Cover (see Frame Cover Removal in the Frame chapter)
  Crankshaft Sensor Lead Connector [A] (see Crankshaft Sensor Removal)
- Set the hand tester [B] to the DC 10 V range.
- Connect the peak voltage adapter [C] to the hand tester and crankshaft sensor leads in the connector.

Special Tools - Hand Tester: 57001-1394
Peak Voltage Adapter: 57001-1415
Type: KEK-54-9-B

Connections:

Crankshaft Sensor Lead		Peak Voltage Adapter		Hand Tester
Yellow	←	Red	→	(+)
Black	←	Black	→	(–)

- Turn the ignition switch and engine stop switch to ON.
- Pushing the starter button, turn the engine 4 ~ 5 seconds with the transmission gear in neutral to measure the crankshaft sensor peak voltage.
- Repeat the measurement 5 or more times.

Crankshaft Sensor Peak Voltage
Standard: 2.0 V or more

★If the tester reading is not specified one, inspect the crankshaft sensor (see Crankshaft Sensor Inspection).

Timing Rotor Removal

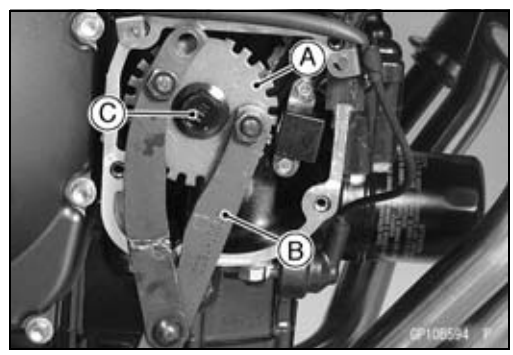

- Remove the crankshaft sensor cover (see Crankshaft Sensor Removal).
- Remove the timing rotor [A].

○Holding the timing rotor with the flywheel & pulley holder [B] and remove the rotor bolt [C].

Special Tool - Flywheel & Pulley Holder: 57001-1605

Timing Rotor Installation

- Fit the rotor to the crankshaft.
- Tighten the rotor bolt.

Torque - Timing Rotor Bolt: 39 N·m (4.0 kgf·m, 29 ft·lb)

- Install the removed parts (see appropriate chapters).

Camshaft Position Sensor Removal

NOTICE

Never drop the sensor, especially on a hard surface. Such a shock to the sensor can damage it.

- Remove:
  Fuel Tank (see Fuel Tank Removal in the Fuel System (DFI) chapter)
  Radiator (see Radiator and Radiator Fan Removal in the Cooling System chapter)
  Camshaft Position Sensor Lead Connector [A] (Disconnect)

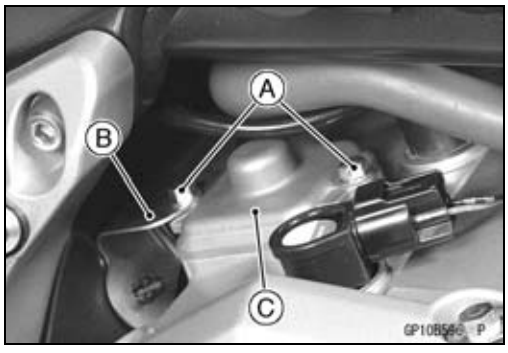

- Remove:
  Air Suction Valve Cover Bolts [A]
  Heat Insulation Rubber Plate Bracket [B]
  Air Suction Valve Cover [C]

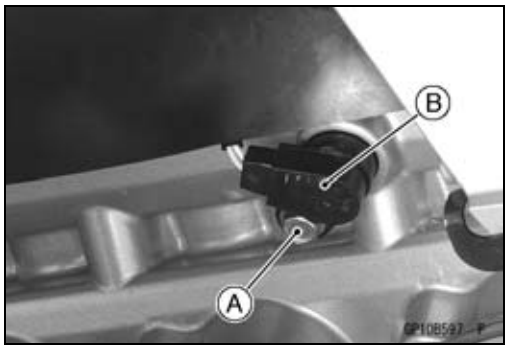

- Remove:
  Camshaft Position Sensor Bolt [A]
  Camshaft Position Sensor [B] and O-ring

Camshaft Position Sensor Installation

- Replace the O-ring with a new one.
- Apply grease to the O-ring on the camshaft position sensor.
- Tighten:

  Torque - Camshaft Position Sensor Bolt: 12 N·m (1.2 kgf·m, 106 in·lb)

Ignition System

Camshaft Position Sensor Inspection

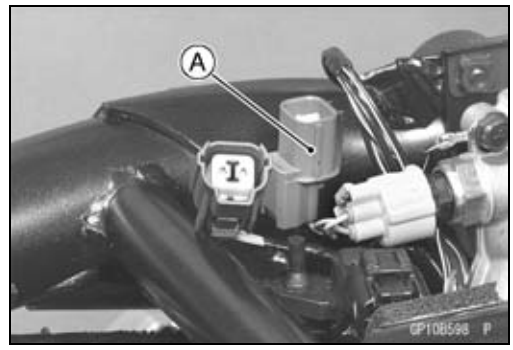

- Disconnect the camshaft position sensor lead connector [A] (see Camshaft Position Sensor Removal).
- Set the hand tester to the × 10 Ω range and connect it to the yellow and white/yellow leads in the connector.

Special Tool - Hand Tester: 57001-1394

Camshaft Position Sensor Resistance:
400 ~ 460 Ω at 20°C (68°F)

★If there is more resistance than the specified value, the sensor coil has an open lead and must be replaced. Much less than this resistance means the sensor coil is shorted, and must be replaced.

- Using the highest resistance range of the tester, measure the resistance between the camshaft position sensor leads and chassis ground.

★Any tester reading less than infinity (∞) indicates a short, necessitating replacement of the camshaft position sensor.

Camshaft Position Sensor Peak Voltage Inspection

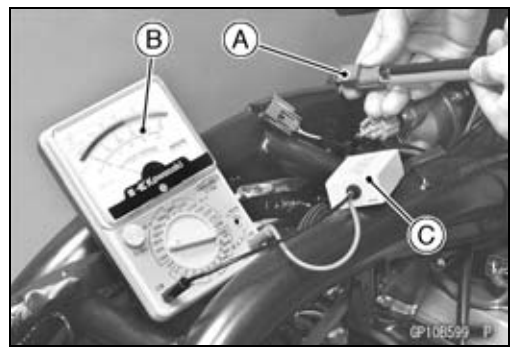

NOTE

○*Be sure the battery is fully charged.*

- Disconnect the camshaft position sensor lead connector [A] (see Camshaft Position Sensor Removal).
- Set the hand tester [B] to the DC 10 V range.
- Connect the peak voltage adapter [C] to the hand tester and camshaft position sensor leads in the connector.

Special Tools - Hand Tester: 57001-1394
Peak Voltage Adapter: 57001-1415
Type: KEK-54-9-B

Connections:

Camshaft Position Sensor Lead		Peak Voltage Adapter		Hand Tester
White/Yellow	←	Red	→	(+)
Yellow	←	Black	→	(–)

- Turn the ignition switch and engine stop switch to ON.
- Pushing the starter button, turn the engine 4 ~ 5 seconds with the transmission gear in neutral to measure the camshaft position sensor peak voltage.
- Repeat the measurement 5 or more times.

Camshaft Position Sensor Peak Voltage
Standard: 0.2 V or more

★If the peak voltage is lower than the standard, inspect the camshaft position sensor (see Camshaft Position Sensor Inspection).

Stick Coil Removal

NOTICE

Never drop the stick coils, especially on a hard surface.
Such a shock to the stick coils can damage it.

- Remove the fuel tank (see Fuel Tank Removal in the Fuel System (DFI) chapter).

- Disconnect the stick coil connector and pull the stick coil #4 [A] off the spark plug.

NOTICE

Do not pry the connector part of the coil while removing the coil.

- Remove:
  Bolt [B] (for Stick Coil #2 and #3)
  Stick Coil Harness Connector [C] with Bracket and Bolt (for Stick Coil #3)

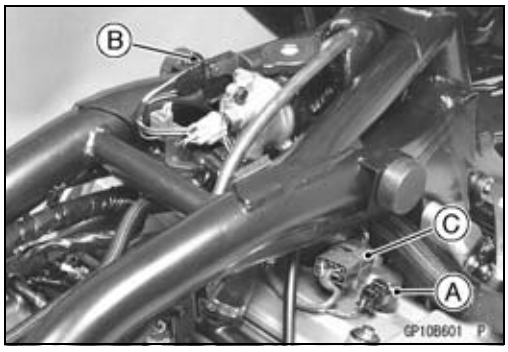

- Disconnect the stick coil connector and pull the stick coil #3 [A] off the spark plug.
○Take out the stick coil #3 from between the frame and thermostat housing.

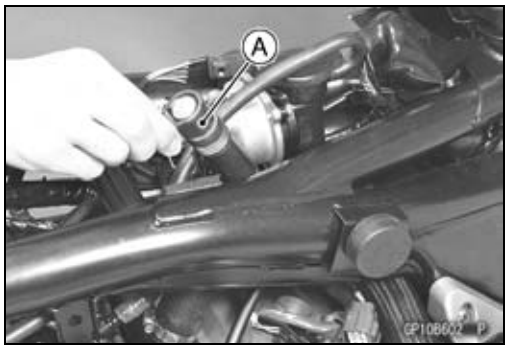

- Remove the air switching valve hose [A] (for Stick Coil #2).
- Disconnect the stick coil connectors [B].
- Pull the stick coil #1 [C] and #2 off the spark plugs.

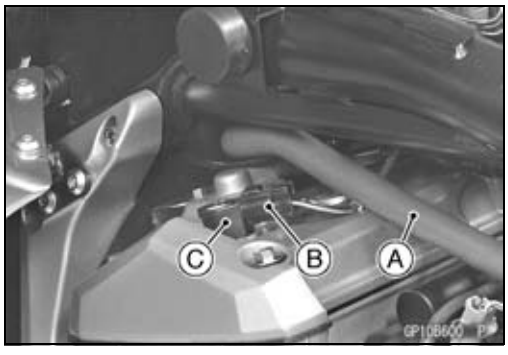

Stick Coil Installation

- Insert the coil as shown being careful of the coil heads [A] direction.
- Be sure the stick coils are installed by pulling up it lightly.
- Connect the connectors.

NOTICE

Do not tap the coil head while installing the coil.

- Run the hoses and harness correctly (see Cable, Wire, and Hose Routing section in the Appendix chapter).
- Install the removed parts (see appropriate chapters).

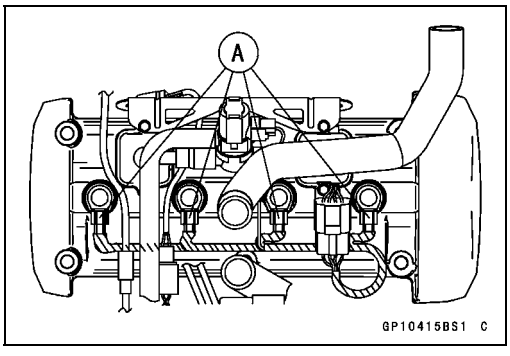

Ignition System

Stick Coil Inspection

● Remove the stick coils (see Stick Coil Removal).
● Measure the primary winding resistance [A] as follows.
○Connect the hand tester between the coil terminals.
○Set the tester to the × 1 Ω range, and read the tester.
● Measure the secondary winding resistance [B] as follows.
○Connect the tester between the plug terminal and (–) coil terminal.
○Set the tester to the × 1 kΩ range and read the tester.

Stick Coil Winding Resistance
Primary Windings: 1.1 ~ 1.5 Ω
Secondary Windings: 10.8 ~ 16.2 kΩ

★If the tester does not read as specified, replace the coil.

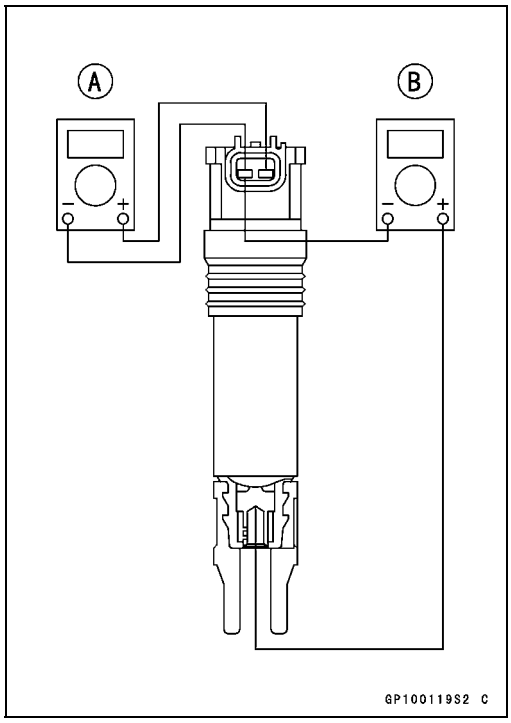

Stick Coil Primary Peak Voltage

NOTE

○*Be sure the battery is fully charged.*

● Remove the stick coils (see Stick Coil Removal), but do not remove the spark plugs.
● Measure the primary peak voltage as follows.
○Install the new spark plug [A] into each stick coil [B], and ground them onto the engine.
○Connect the peak voltage adapter [C] into the hand tester [D] which is set to the DC 250 V range.
○Connect the adapter to the lead wire-peak voltage adapter [E] which is connected between the stick coil connector and stick coil.
ECU [F]
Battery [G]

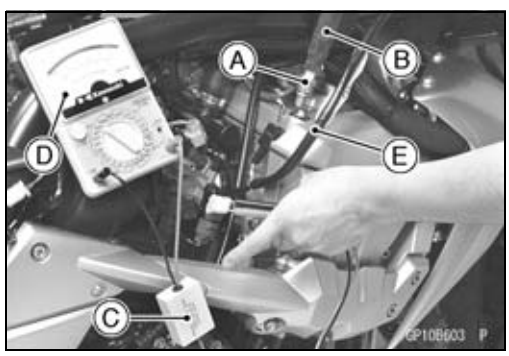

Special Tools - Hand Tester: 57001-1394
Peak Voltage Adapter: 57001-1415
Type: KEK-54-9-B
Lead Wire-Peak Voltage Adapter: 57001-1449

Primary Lead Connection
Adapter (R, +) to lead wire-peak voltage adapter (W)
Adapter (BK, –) to lead wire-peak voltage adapter (R)

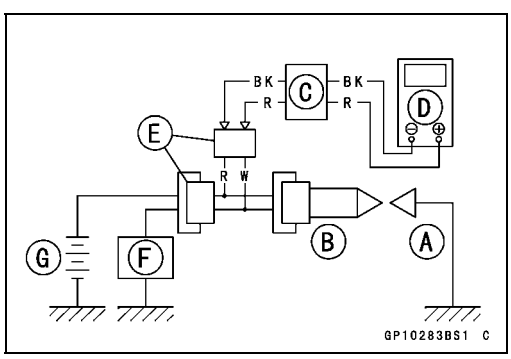

Ignition System

⚠ WARNING

To avoid extremely high voltage shocks, do not touch the spark plugs or tester connections.

- Turn the ignition switch and the engine stop switch to ON.
- Pushing the starter button, turn the engine 4 ~ 5 seconds with the transmission in neutral to measure the primary peak voltage.
- Repeat the measurements 5 times for one stick coil.

Stick Coil Primary Peak Voltage
Standard: 100 V or more

- Repeat the test for the other stick coil.

★If the reading is less than the specified value, check the following.
Stick Coils (see Stick Coil Inspection)
Crankshaft Sensor (see Crankshaft Sensor Inspection)
ECU (see ECU Power Supply Inspection in the Fuel System (DFI) chapter)

Spark Plug Removal

- Refer to the Spark Plug Replacement in the Periodic Maintenance chapter.

Spark Plug Installation

- Refer to the Spark Plug Replacement in the Periodic Maintenance chapter.

Spark Plug Condition Inspection

- Refer to the Spark Plug Condition Inspection in the Periodic Maintenance chapter.

Interlock Operation Inspection

- Raise the rear wheel off the ground with stand.
- Turn the engine stop switch to ON (run position).

1st Check

- Start the engine to the following conditions.

Condition:
Transmission Gear → 1st Position
Clutch Lever → Release
Sidestand → Down or Up

○Turn the ignition switch to ON and push the starter button.
○Then the starter motor should not turn when the starter system circuit is normality.
★If the engine is start, inspect the starter lockout switch, neutral switch and relay box.

Ignition System

2nd Check

● Start the engine to the following conditions.

Condition:
Transmission Gear → 1st Position
Clutch Lever → Pulled in
Sidestand → Up

○Turn the ignition switch to ON and push the starter button.
○Then the starter motor should turn when the starter system circuit is normality.
★If the starter motor is not turn, inspect the starter lockout switch, sidestand switch, relay box and starter relay.

3rd Check

● Inspect the engine for its secure stop after the following operations are completed.
● Run the engine to the following conditions.

Condition:
Transmission Gear → 1st Position
Clutch Lever → Release
Sidestand → Up

● Set the sidestand on the ground, then the engine will stop.
★If the engine does not stop, inspect the neutral switch, sidestand switch and relay box.
★If their parts are normality, replace the ECU.

IC Igniter Inspection

○The IC igniter is built in the ECU [A].
● Refer to the following items.
Interlock Operation Inspection (see Interlock Operation Inspection)
Ignition System Troubleshooting (see Ignition System section)
ECU Power Supply Inspection (see ECU Power Supply Inspection in the Fuel System (DFI) chapter)

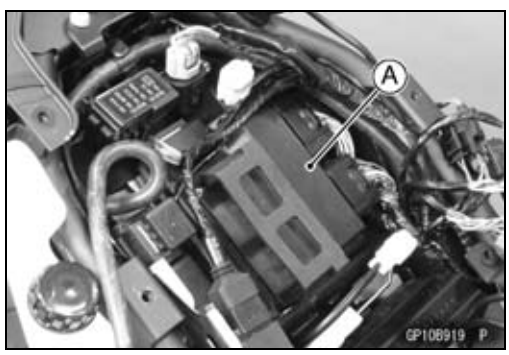

Ignition System Troubleshooting

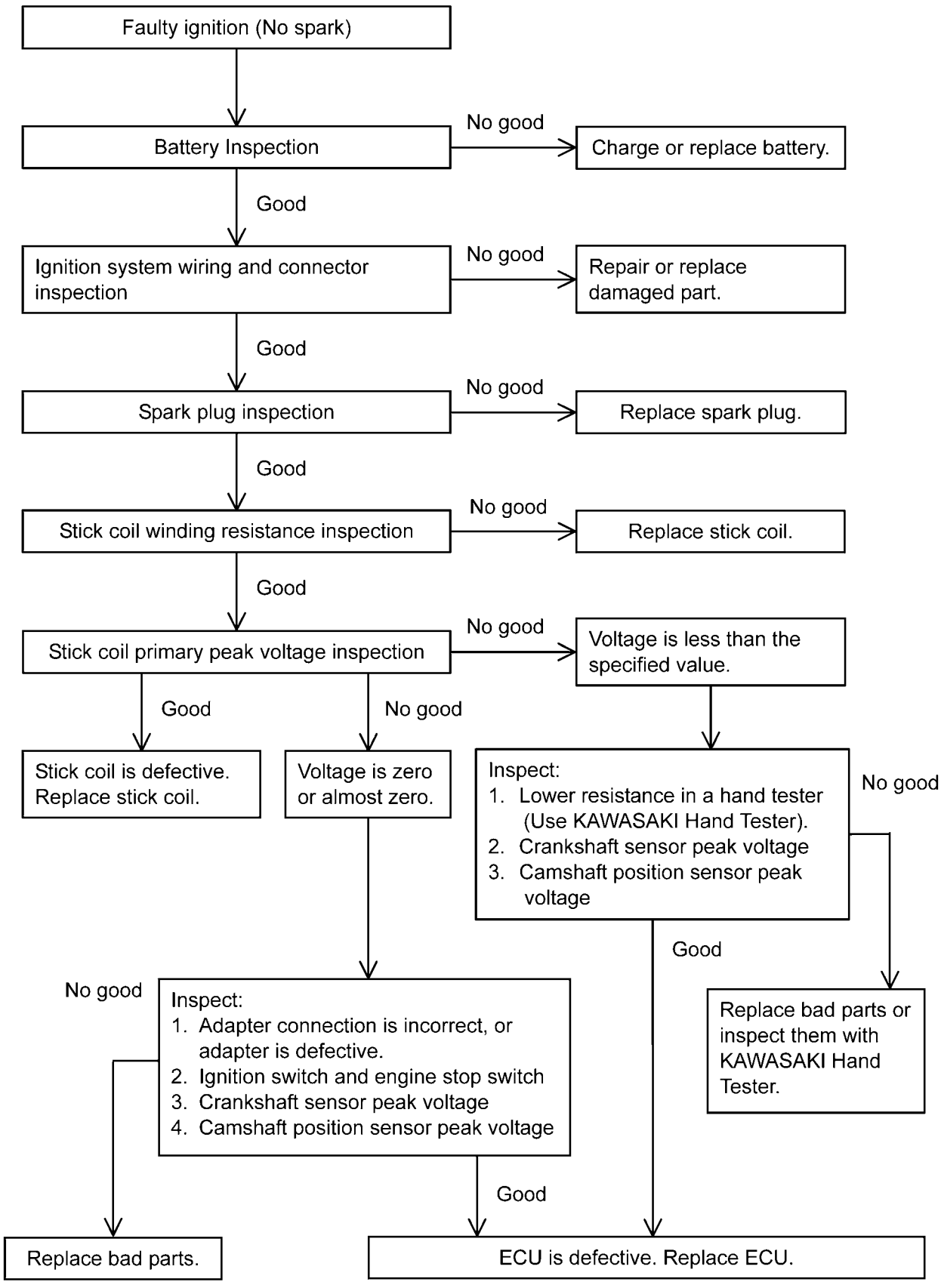

Ignition System

Ignition System Circuit

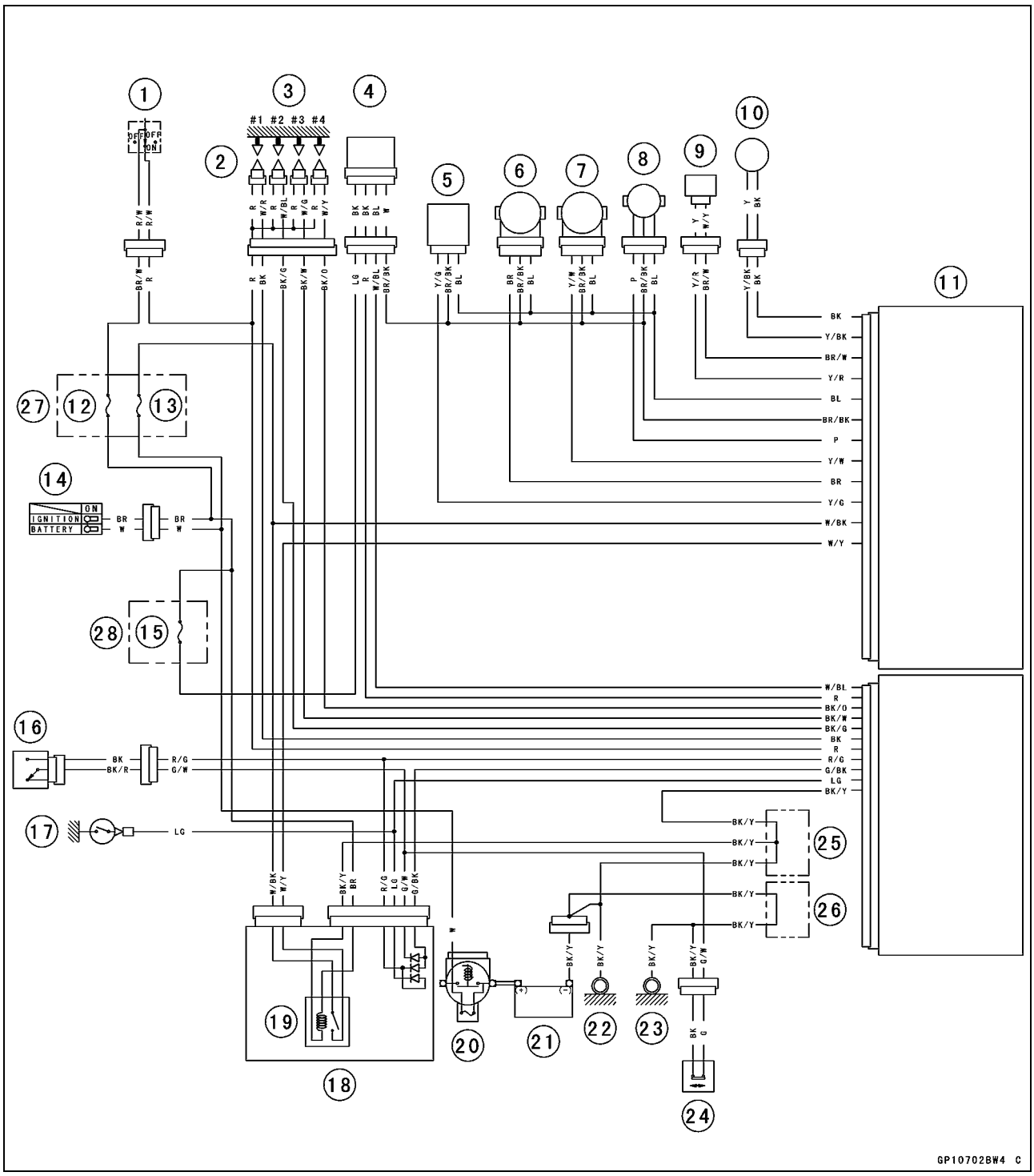

1. Engine Stop Switch
2. Stick Coils
3. Spark Plugs
4. Oxygen Sensor
5. Vehicle-down Sensor
6. Subthrottle Sensor
7. Main Throttle Sensor
8. Speed Sensor
9. Camshaft Position Sensor
10. Crankshaft Sensor
11. ECU
12. Ignition Fuse 10 A
13. ECU Fuse 10 A
14. Ignition Switch
15. Oxygen Sensor Heater Fuse 10 A
16. Starter Lockout Switch
17. Neutral Switch
18. Relay Box
19. ECU Main Relay
20. Main Fuse 30 A
21. Battery 12 V 8 Ah
22. Frame Ground
23. Meter Ground
24. Sidestand Switch
25. Water-proof Joint B
26. Water-proof Joint C
27. Fuse Box 2
28. Fuse Box 1

Starter Motor Removal

NOTICE

Do not tap the starter motor shaft or body. Tapping the shaft or body could damage the motor.

- Remove the water pipe (see Alternator Cover Removal).
- Slide back the rubber cap [A].
- Remove the starter motor cable terminal nut [B].

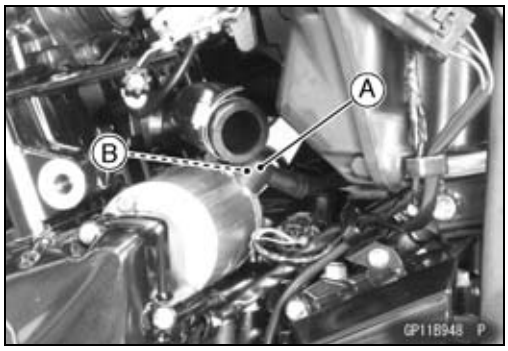

- Loosen the clamp screw [A] and remove the water hose [B].

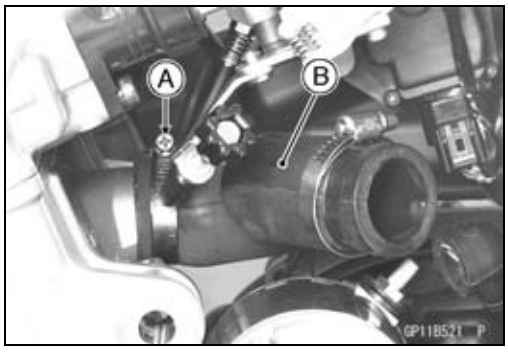

- Remove the mounting bolts [A].
- Pull out the starter motor [B].

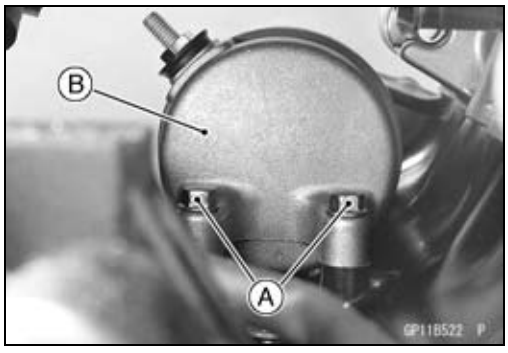

Starter Motor Installation

NOTICE

Do not tap the starter motor shaft or body. Tapping the shaft or body could damage the motor.

- When installing the starter motor, clean the starter motor legs [A] and crankcase [B] where the starter motor is grounded.

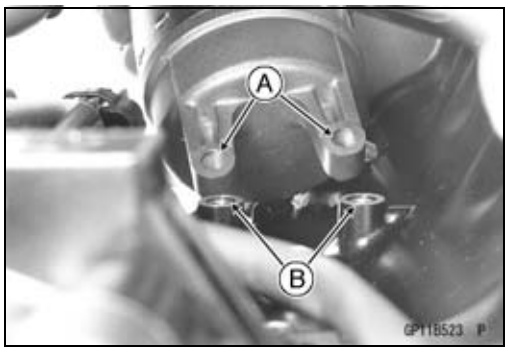

- Replace the O-ring [A] with a new one.
- Apply grease to the O-ring.
- Tighten:

  Torque - Starter Motor Mounting Bolts: 11 N·m (1.1 kgf·m, 97 in·lb)

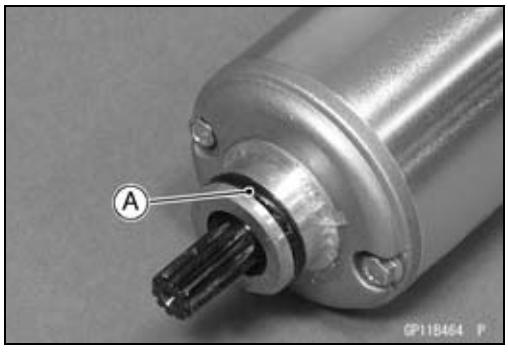

Electric Starter System

Starter Motor Disassembly

- Remove the starter motor (see Starter Motor Removal).
- Take off the starter motor through bolts [A] and remove the both end covers [B] and pull the armature out of the yoke [C].

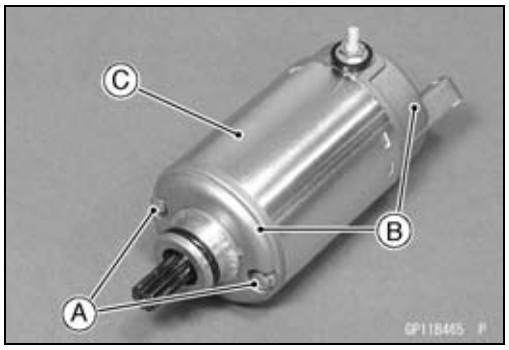

○The brush plate [A] and brushes come off with the right -hand end cover [B].

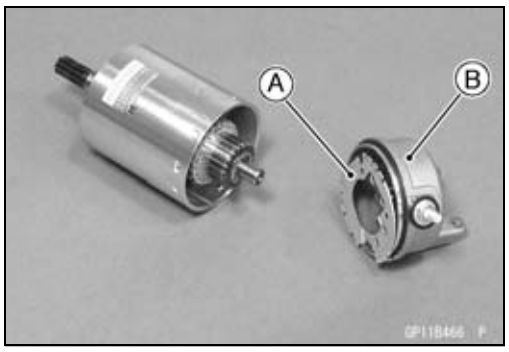

- Remove the terminal locknut [A] and terminal bolt [B], and then remove the brush with the brush plate [C] from the right-hand end cover.

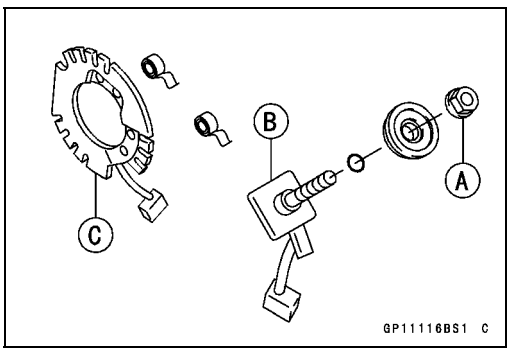

Starter Motor Assembly

- Replace the O-rings [A] with new ones.

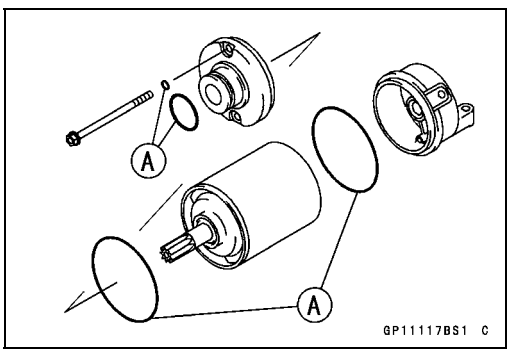

- Install the brush plate so that the notch [A] of the brush plate aligns with the notch [B] of the end cover.

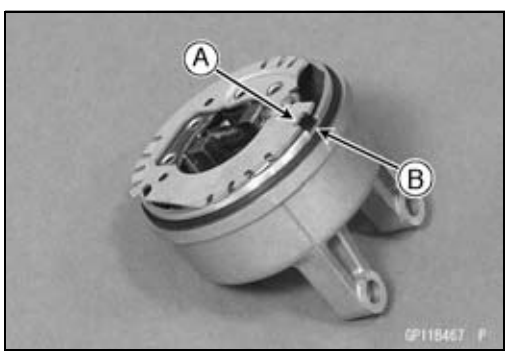

- Install the shims [A] on the armature shaft.

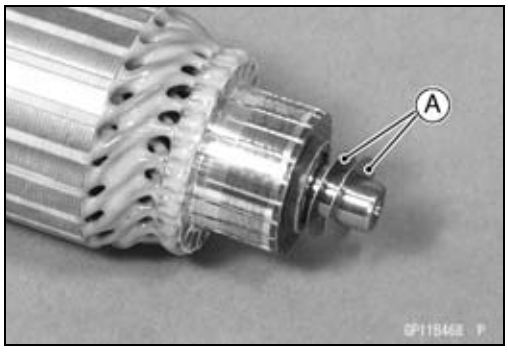

- Install the armature [B] among the brushes [A].

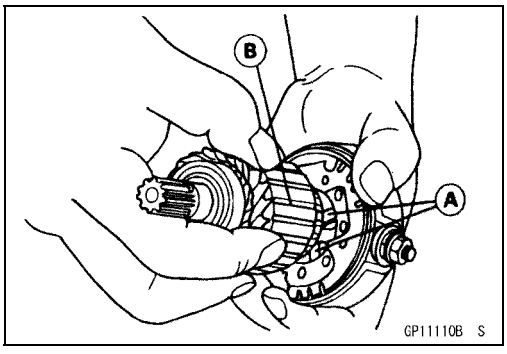

- Align the line marks [A] of the end cover with the square mark [B] on the yoke.

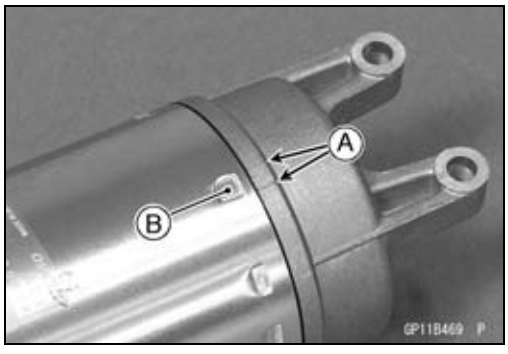

- Align the line marks [A] of the yoke with the through bolt hole [B] in the end cover.
- Replace the O-rings on the through bolts with new ones and tighten them.

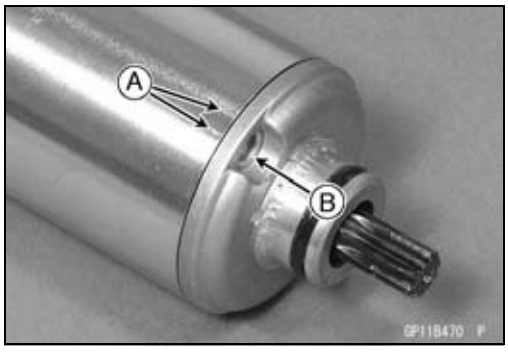

Brush Inspection

- Measure the length of each brush [A].

★If any is worn down to the service limit, replace the brush plate assembly [B] and the terminal bolt assembly [C].

Starter Motor Brush Length [D]

Standard:	**12 mm (0.47 in.)**
Service Limit:	**8.5 mm (0.33 in.)**

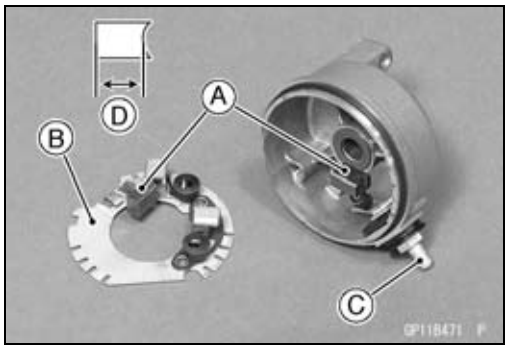

Electric Starter System

Commutator Cleaning and Inspection

- Smooth the commutator surface [A] if necessary with fine emery cloth [B], and clean out the grooves.

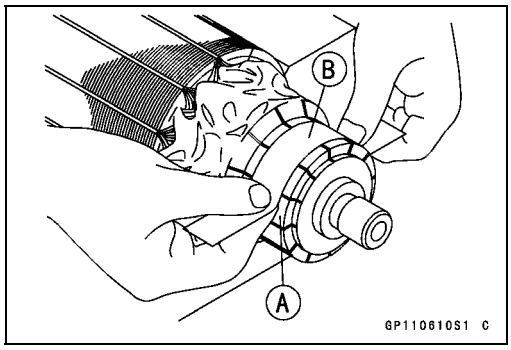

- Measure the diameter [A] of the commutator [B].

★If the commutator diameter is less than the service limit, replace the starter motor with a new one.

Commutator Diameter

Standard:	**28 mm (1.10 in.)**
Service Limit:	**27 mm (1.06 in.)**

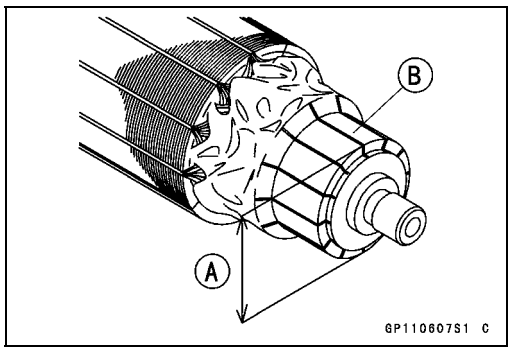

Armature Inspection

- Using the × 1 Ω hand tester range, measure the resistance between any two commutator segments [A].

Special Tool - Hand Tester: 57001-1394

★If there is a high resistance or no reading (∞) between any two segments, a winding is open and the starter motor must be replaced.

- Using the highest hand tester range, measure the resistance between the segments and the shaft [B].

★If there is any reading at all, the armature has a short and the starter motor must be replaced.

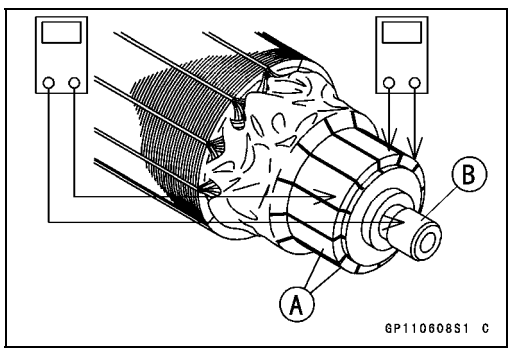

NOTE

○*Even if the foregoing checks show the armature to be good, it may be defective in some manner not readily detectable with the hand tester. If all other starter motor and starter motor circuit components check good, but the starter motor still does not turn over or only turns over weakly, replace the starter motor with a new one.*

Brush Lead Inspection

- Using the × 1 Ω hand tester range, measure the resistance as shown in the figure.
  Terminal Bolt and Positive Brush [A]
  Brush Plate and Negative Brush [B]

Special Tool - Hand Tester: 57001-1394

★If there is not close to zero ohms, the brush lead has an open. Replace the terminal bolt assembly and/or the brush plate assembly.

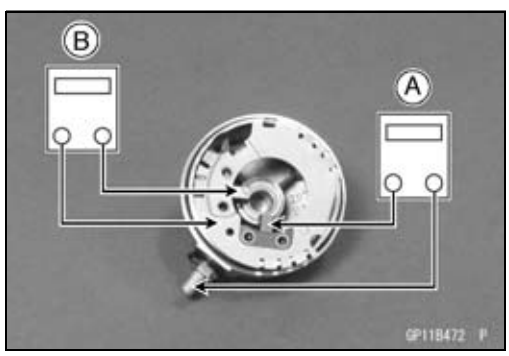

Brush Plate and Terminal Bolt Inspection

- Using the highest hand tester range, measure the resistance as shown in the figure.
  Terminal Bolt and Brush Plate [A]
  Terminal Bolt and Right-hand End Cover [B]

  Special Tool - Hand Tester: 57001-1394

★If there is any reading, the brush holder assembly and/or terminal bolt assembly have a short. Replace the brush holder assembly and the terminal bolt assembly.

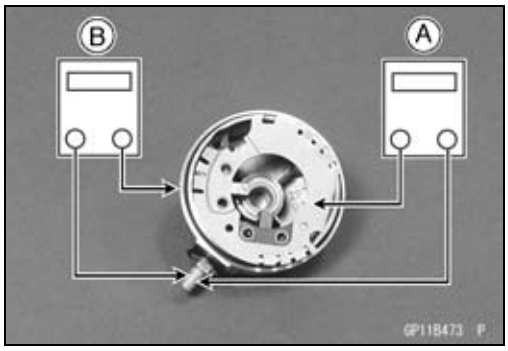

Starter Relay Inspection

- Remove:
  Battery Negative (–) Cable (see Battery Removal)
  Left Seat Cover (see Seat Cover Removal in the Frame chapter)
  Rear Seat Bracket Bolts [A]
  Rear Seat Bracket [B]

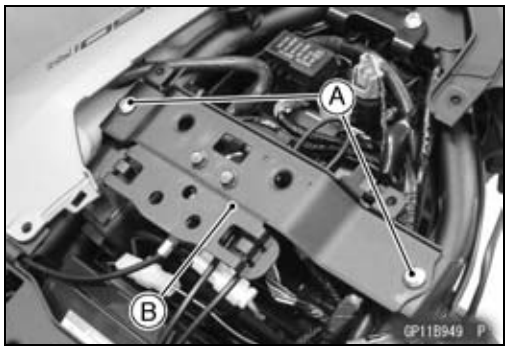

- Disconnect the connector [A].

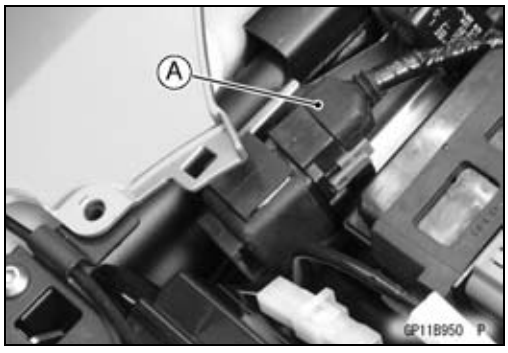

- Remove:
  Cable Terminals [A] (Disconnect)
  Starter Relay [B]

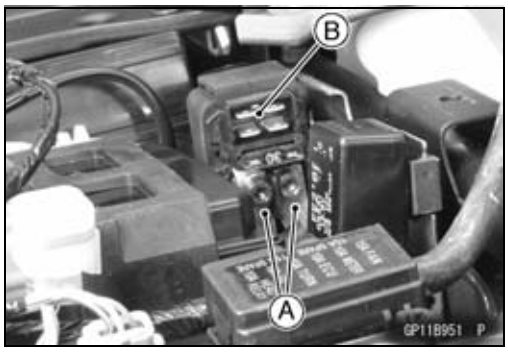

- Connect the hand tester [A] and 12 V battery [B] to the starter relay [C] as shown in the figure.

  Special Tool - Hand Tester: 57001-1394

★If the relay does not work as specified, the relay is defective. Replace the relay.

Testing Relay

Tester Range:	**× 1 Ω range**
Criteria:	**When battery is connected → 0 Ω**
	When battery is disconnected → ∞ Ω

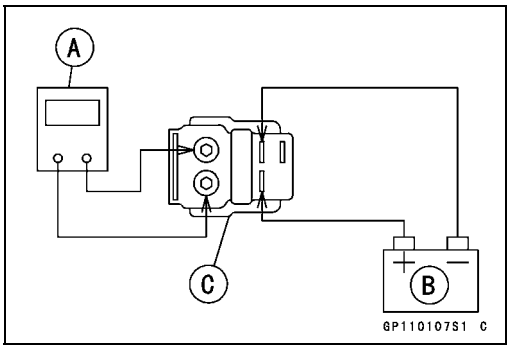

Electric Starter System

Electric Starter Circuit

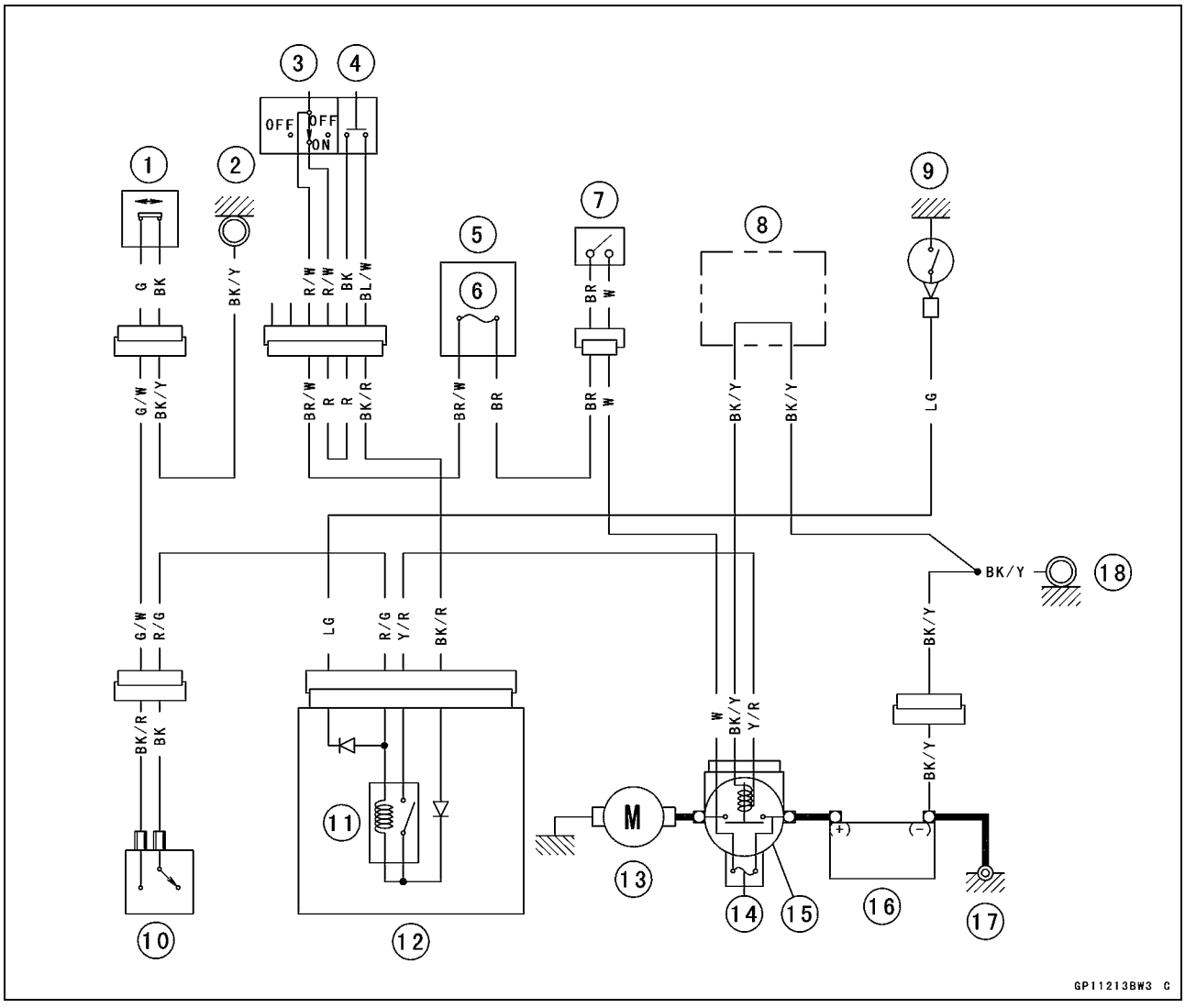

1. Sidestand Switch
2. Meter Ground
3. Engine Stop Switch
4. Starter Button
5. Fuse Box 2
6. Ignition Fuse 10 A
7. Ignition Switch
8. Water-proof Joint B
9. Neutral Switch
10. Starter Lockout Switch
11. Starter Circuit Relay
12. Relay Box
13. Starter Motor
14. Main Fuse 30 A
15. Starter Relay
16. Battery 12 V 8 Ah
17. Engine Ground
18. Frame Ground

Lighting System

This motorcycle adopt the daylight system and have a headlight relay in the relay box. The headlight does not go on when the ignition switch and the engine stop switch are first turned on. The headlight comes on after the starter button is released and stays on until the ignition switch is turned off. The headlight will go out momentarily whenever the starter button is pressed and come back on when the button is released.

Headlight Beam Horizontal Adjustment

- Refer to the Headlight Aiming Inspection in the Periodic Maintenance chapter.

Headlight Beam Vertical Adjustment

- Refer to the Headlight Aiming Inspection in the Periodic Maintenance chapter.

Headlight Bulb Replacement

- Remove:
  Upper Fairing (see Upper Fairing Removal in the Frame chapter)
  Headlight Connectors [A]

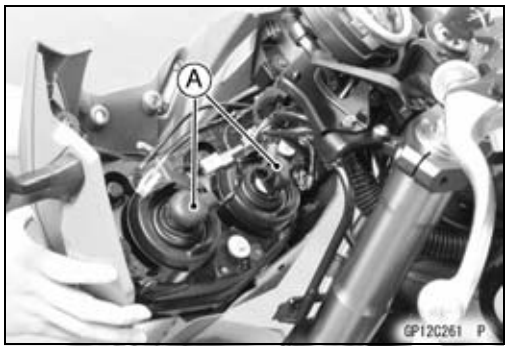

- Remove the headlight bulb dust cover [A].

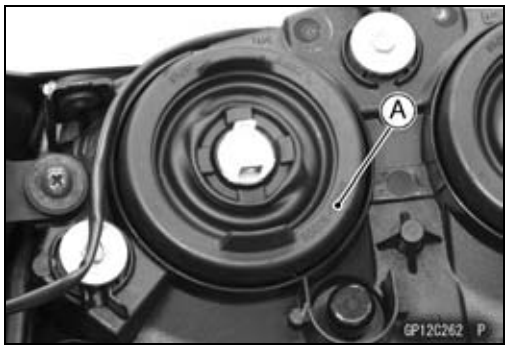

- Remove:
  Hook [A]
  Headlight Bulb [B]

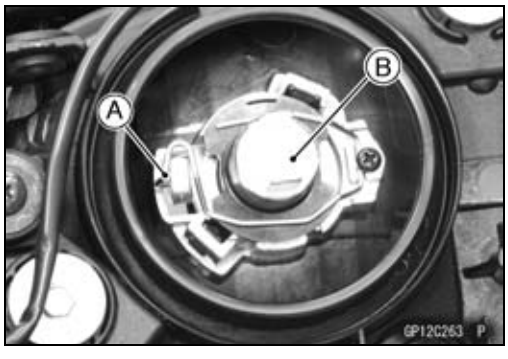

Lighting System

NOTICE

When handling the quartz-halogen bulb [A], never touch the glass portion with bare hands. Always use a clean cloth. Oil contamination from hands or dirty rags can reduce bulb life or cause the bulb to explode.

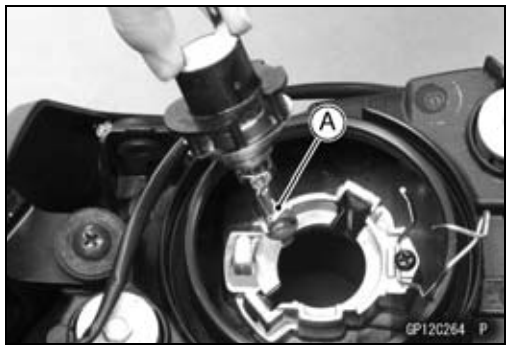

NOTE

○*Clean off any contamination that inadvertently gets on the bulb with alcohol or soap and water solution.*

- Replace the headlight bulb.
- Fit the projection [A] of the bulb in the hollow [B] of the headlight.

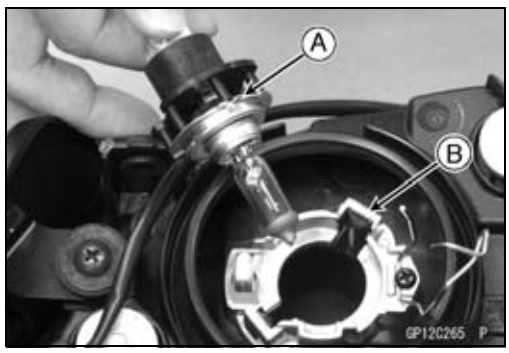

- Install the hook [A].

- Fit the dust cover [A] onto the bulb [B] firmly as shown in the figure.
  Good [C]
  Bad [D]
- After installation, adjust the headlight aim (see Headlight Aiming Inspection in the Periodic Maintenance chapter).

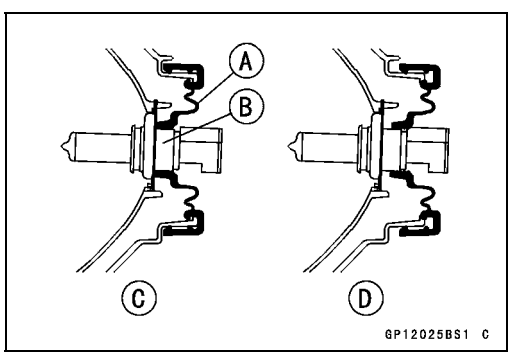

Headlight Removal/Installation

- Remove:
  Upper Fairing (see Upper Fairing Removal in the Frame chapter)
  Screws [A]
  Screws [B] and Brackets
  Headlight Assy [C]
- Installation is the reverse of removal.

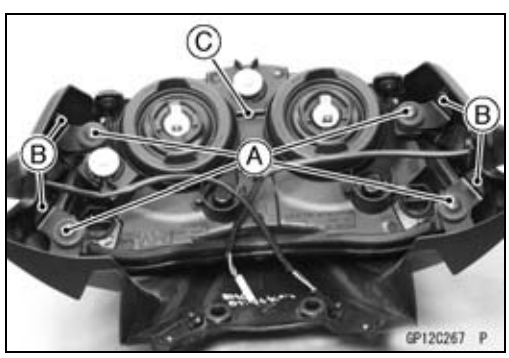

City Light Bulb Replacement

- Remove the upper fairing (see Upper Fairing Removal in the Frame chapter).
- Turn the socket [A] counterclockwise and remove it with the bulb.

- Pull out the bulb [A] straight from the socket.

NOTICE

Do not turn the bulb. Pull the bulb out to prevent damage to the bulb. Do not use bulb rated for greater wattage then the specified valve.

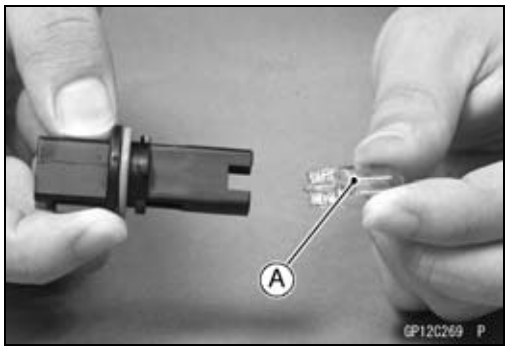

- Replace the bulb with a new one.

- Align the triangle mark [A] of the socket with mark [B].
- Turn the socket clockwise until the triangle mark aligns with the triangle mark [C].

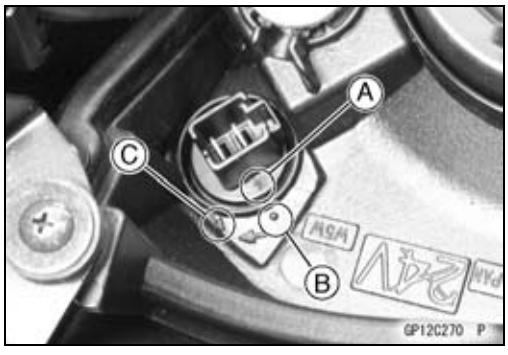

Tail/Brake Light (LED) Removal

- Remove:
  Center Seat Cover (see Seat Cover Removal in the Frame chapter)
  Tail/Brake Light Mounting Screws [A]
  Tail/Brake Light (LED) [B]

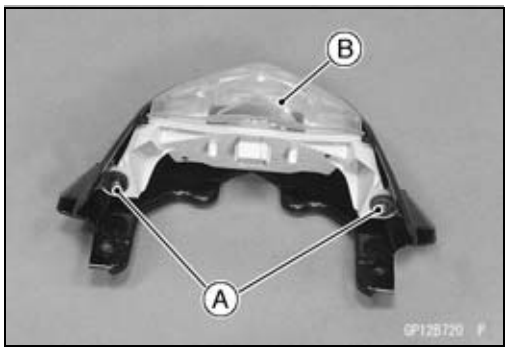

Tail/Brake Light (LED) Installation

- Installation is the reverse of removal.
- Tighten the tail/brake light mounting screws.

Torque - Tail/Brake Light Mounting Screws: 1.2 N·m (0.12 kgf·m, 11 in·lb)

Lighting System

License Plate Light Bulb Replacement

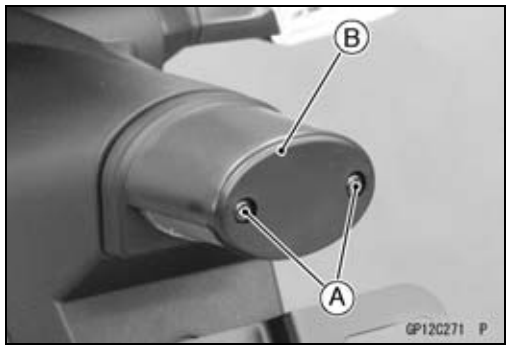

- Remove:
  Screws [A]
  License Plate Light Cover [B]

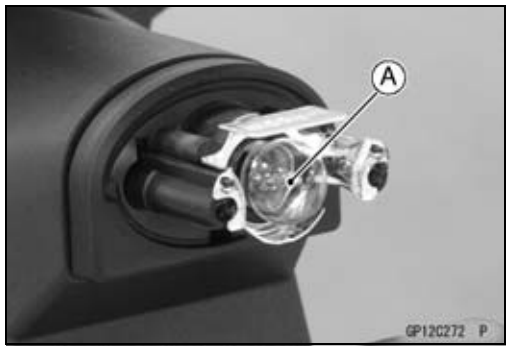

- Push and turn the bulb [A] counterclockwise and remove it.
- Replace the bulb with a new one.

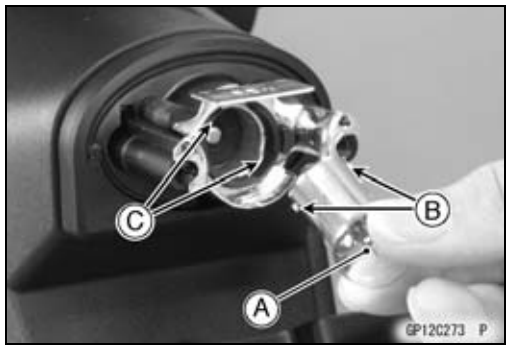

- Insert the new bulb [A] by aligning its upper and lower pins [B] with the upper and lower grooves [C] in the socket, and turn the bulb clockwise.

○Turn the bulb about 15°.

- Tighten:

Torque - License Plate Light Cover Mounting Screws: 0.9 N·m (0.09 kgf·m, 8 in·lb)

Lighting System

Headlight/Tail Light Circuit

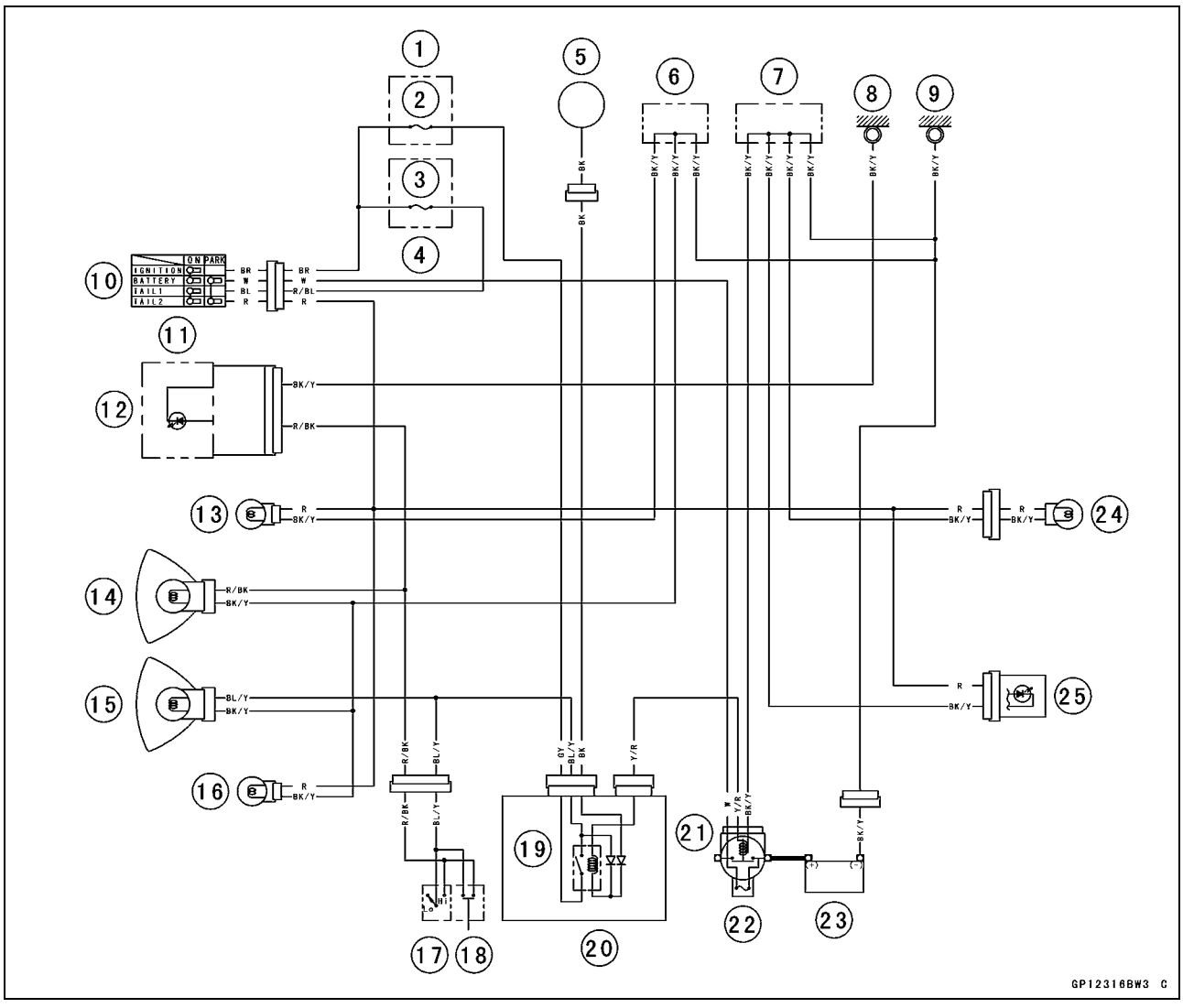

1. Fuse Box 2
2. Headlight Fuse 10 A
3. Taillight Fuse 10 A
4. Fuse Box 1
5. Alternator
6. Water-proof Joint A
7. Water-proof Joint B
8. Meter Ground
9. Frame Ground
10. Ignition Switch
11. Meter Unit
12. High Beam Indicator Light (LED)
13. Right City Light 12 V 5 W
14. Headlight (High) 12 V 55 W
15. Headlight (Low) 12 V 55 W
16. Left City Light 12 V 5 W
17. Dimmer Switch
18. Passing Button
19. Headlight Circuit Relay
20. Relay Box
21. Starter Relay
22. Main Fuse 30 A
23. Battery 12 V 8 Ah
24. License Plate Light 12 V 5 W
25. Tail/Brake Light (LED)

Turn Signal Light Bulb Replacement

- Unscrew the screw [A] and remove the lens [B].

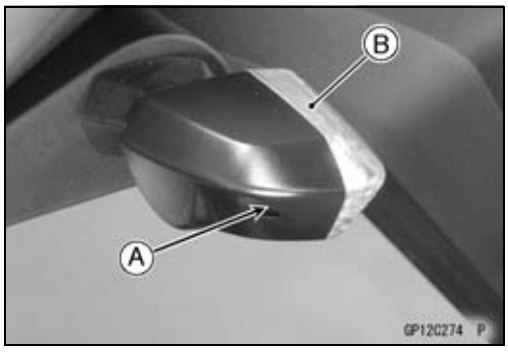

Lighting System

- Push and turn the bulb [A] counterclockwise and remove it.

- Insert the new bulb [A] by aligning its upper and lower pins [B] with the upper and lower grooves [C] in the socket, and turn the bulb clockwise.

○Turn the bulb about 15°.

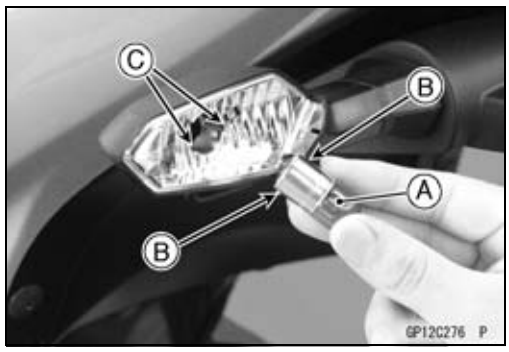

Turn Signal Relay Inspection

- Remove:
  Rear Seat (see Rear Seat Removal in the Frame chapter)
  Turn Signal Relay [A]

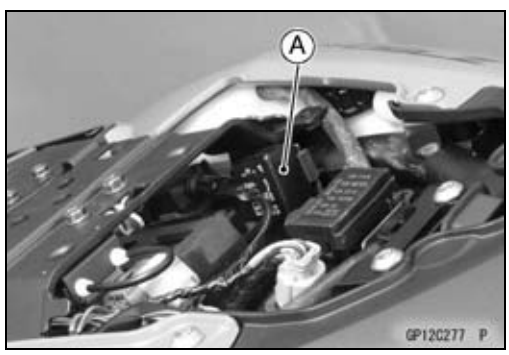

- Connect one 12 V battery and turn signal lights as indicated in the figure, and count how may times the lights blink for one minute.
  Turn Signal Relay [A]
  Turn Signal Lights [B]
  12 V Battery [C]

★If the lights do not blink as specified, replace the turn signal relay.

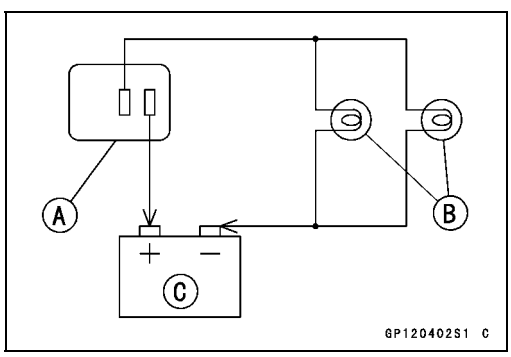

Testing Turn Signal Relay

Load		Blinking Times (c/m*)
The Number of Turn Signal Lights	Wattage (W)	
1**	10	140 ~ 250
2	20	75 ~ 95

(*): Cycle(s) per minute
(**): Corrected to “one light burned out”.

Lighting System

Turn Signal Light Circuit

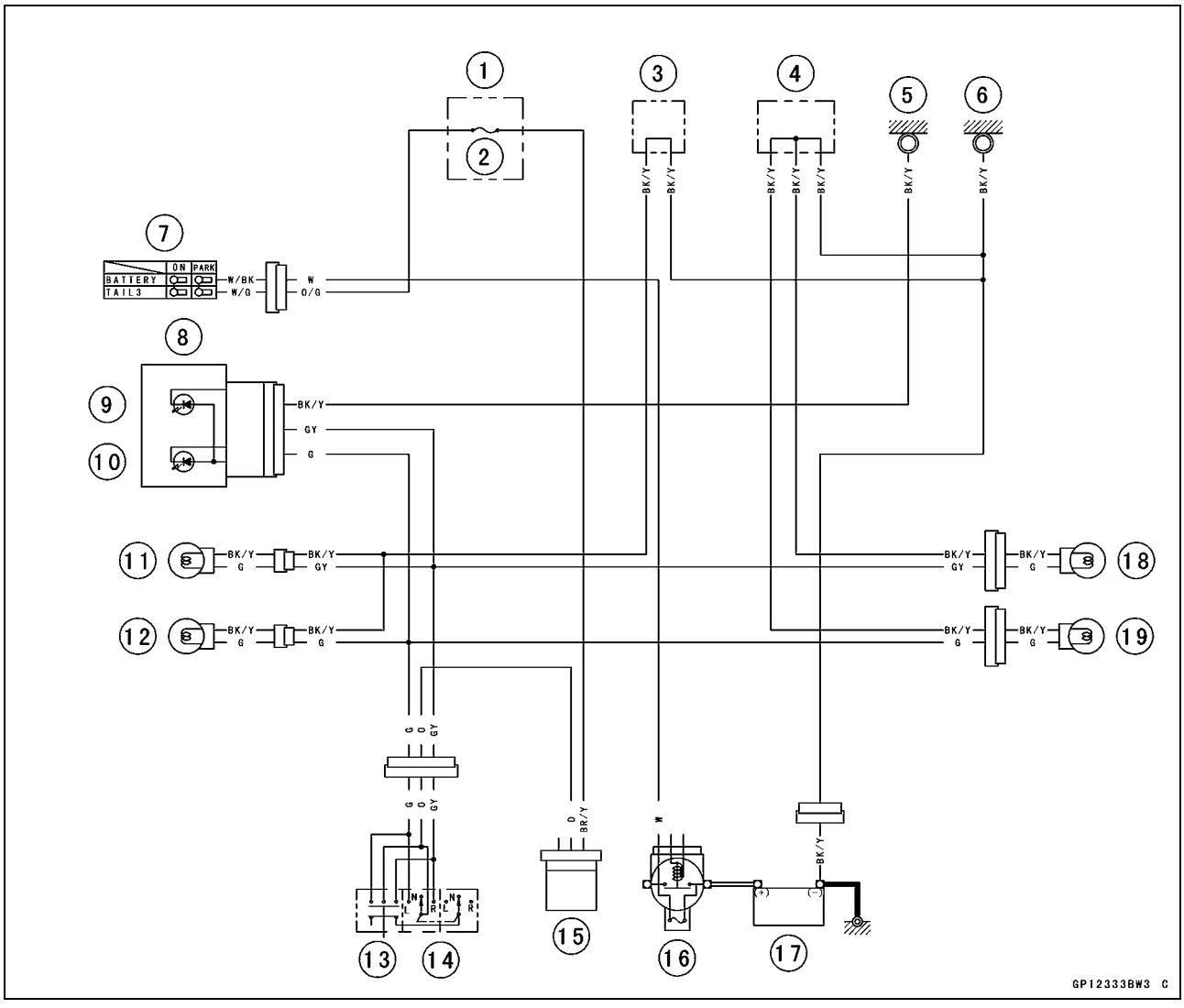

1. Fuse Box 2
2. Turn Signal Relay Fuse 10 A
3. Water-proof Joint A
4. Water-proof Joint B
5. Meter Ground
6. Frame Ground
7. Ignition Switch
8. Meter Unit
9. Right Turn Signal Indicator Light (LED)
10. Left Turn Signal Indicator Light (LED)
11. Front Right Turn Signal Light 12 V 10 W
12. Front Left Turn Signal Light 12 V 10 W
13. Hazard Button
14. Turn Signal Switch
15. Turn Signal Relay
16. Main Fuse 30 A
17. Battery 12 V 8 Ah
18. Rear Right Turn Signal Light 12 V 10 W
19. Rear Left Turn Signal Light 12 V 10 W

Air Switching Valve

Air Switching Valve Operation Test

- Refer to the Air Suction System Damage Inspection in the Periodic Maintenance chapter.

Air Switching Valve Unit Test

- Remove the air switching valve (see Air Switching Valve Removal in the Engine Top End chapter).
- Set the hand tester [A] to the × 1 Ω range and connect it to the air switching valve terminals as shown in the figure.

Special Tool - Hand Tester: 57001-1394

Air Switching Valve Resistance
Standard: 18 ~ 22 Ω at 20°C (68°F)

★If the tester does not read as specified value, replace it with a new one.

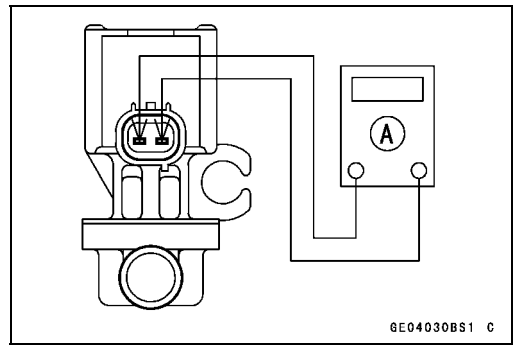

- Connect the 12 V battery [A] to the air switching valve terminals as shown in the figure.

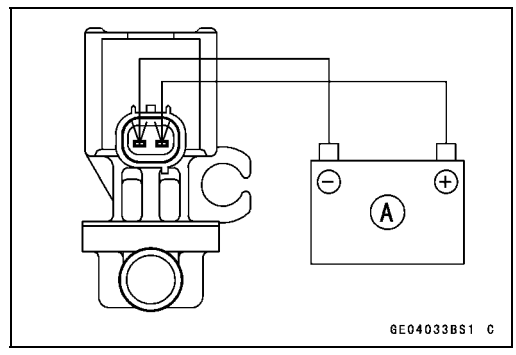

- Blow the air to the intake air duct [A], and make sure does not flow the blown air from the outlet air duct [B].

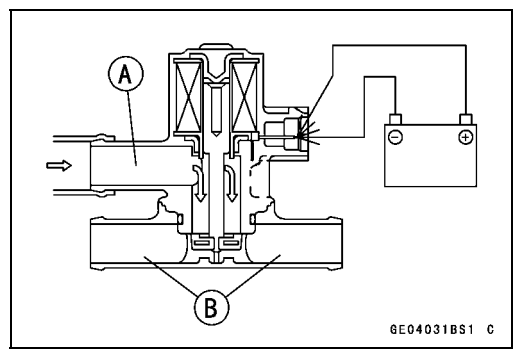

- Disconnect the 12 V battery.
- Blow the air to the intake air duct [A] again, and make sure flow the blown air from the outlet air duct [B].

★If the air switching valve does not operate as described, replace it with a new one.

NOTE

○*To check air flow through the air switching valve, just blow through the air switching valve hose (intake side) [C].*

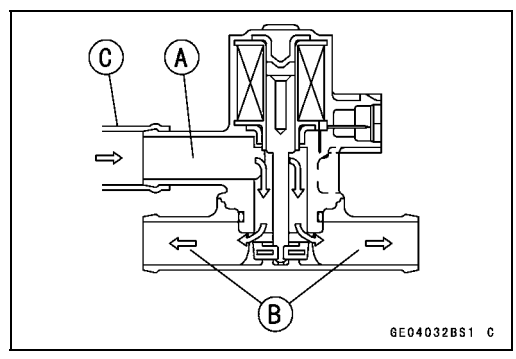

Air Switching Valve

Air Switching Valve Circuit

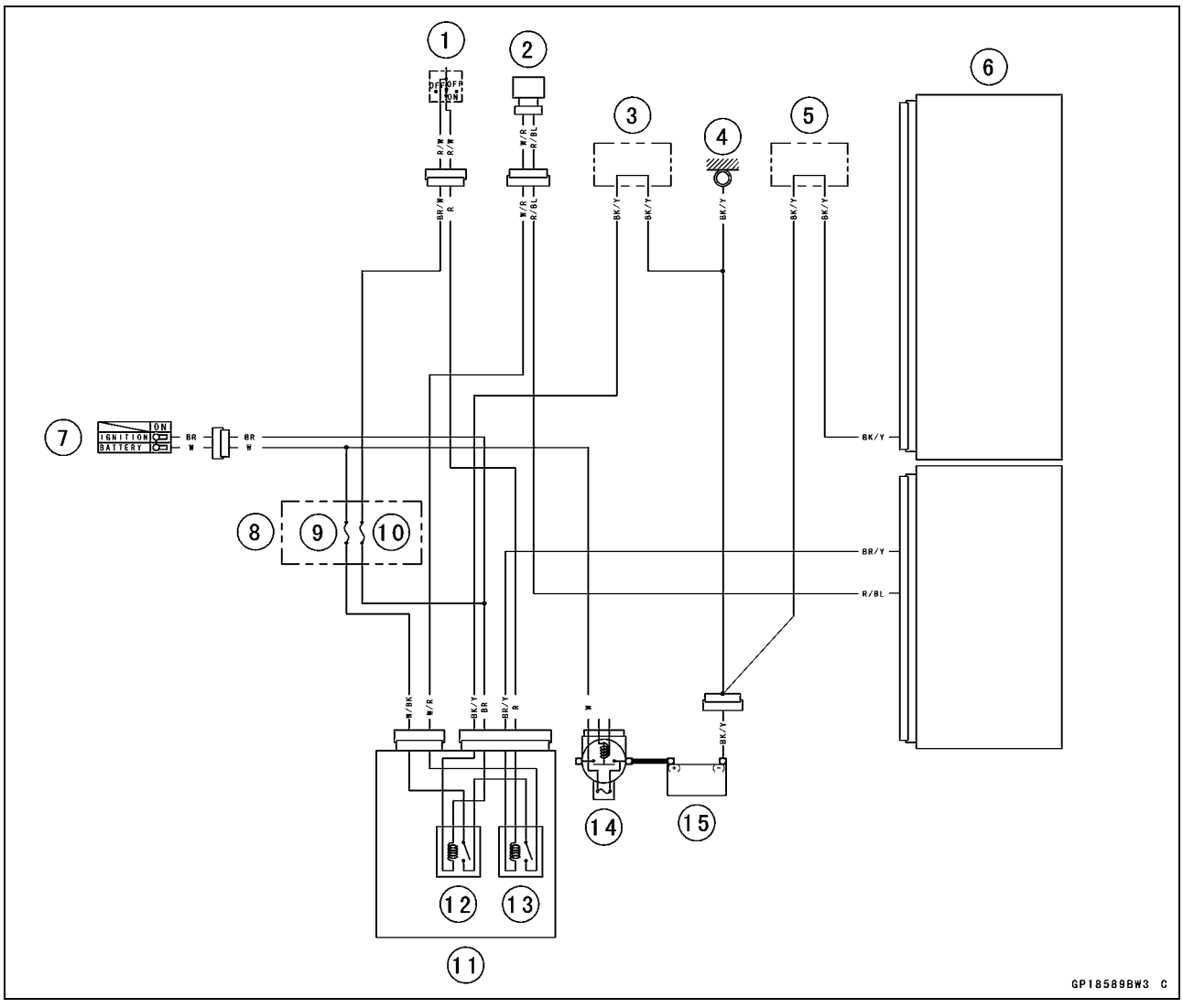

1. Engine Stop Switch
2. Air Switching Valve
3. Water-proof Joint B
4. Frame Ground
5. Water-proof Joint C
6. ECU
7. Ignition Switch
8. Fuse Box 2
9. ECU Fuse 10 A
10. Ignition Fuse 10 A
11. Relay Box
12. ECU Main Relay
13. Fuel Pump Relay
14. Main Fuse 30 A
15. Battery 12 V 8 Ah

Radiator Fan System

Fan Motor Inspection

- Remove the fuel tank (see Fuel Tank Removal in the Fuel System (DFI) chapter).
- Disconnect the connector [A].
- Using an auxiliary leads, supply battery power to the fan motor.

★If the fan does not rotate, the fan motor is defective and must be replaced.

Radiator Fan Circuit

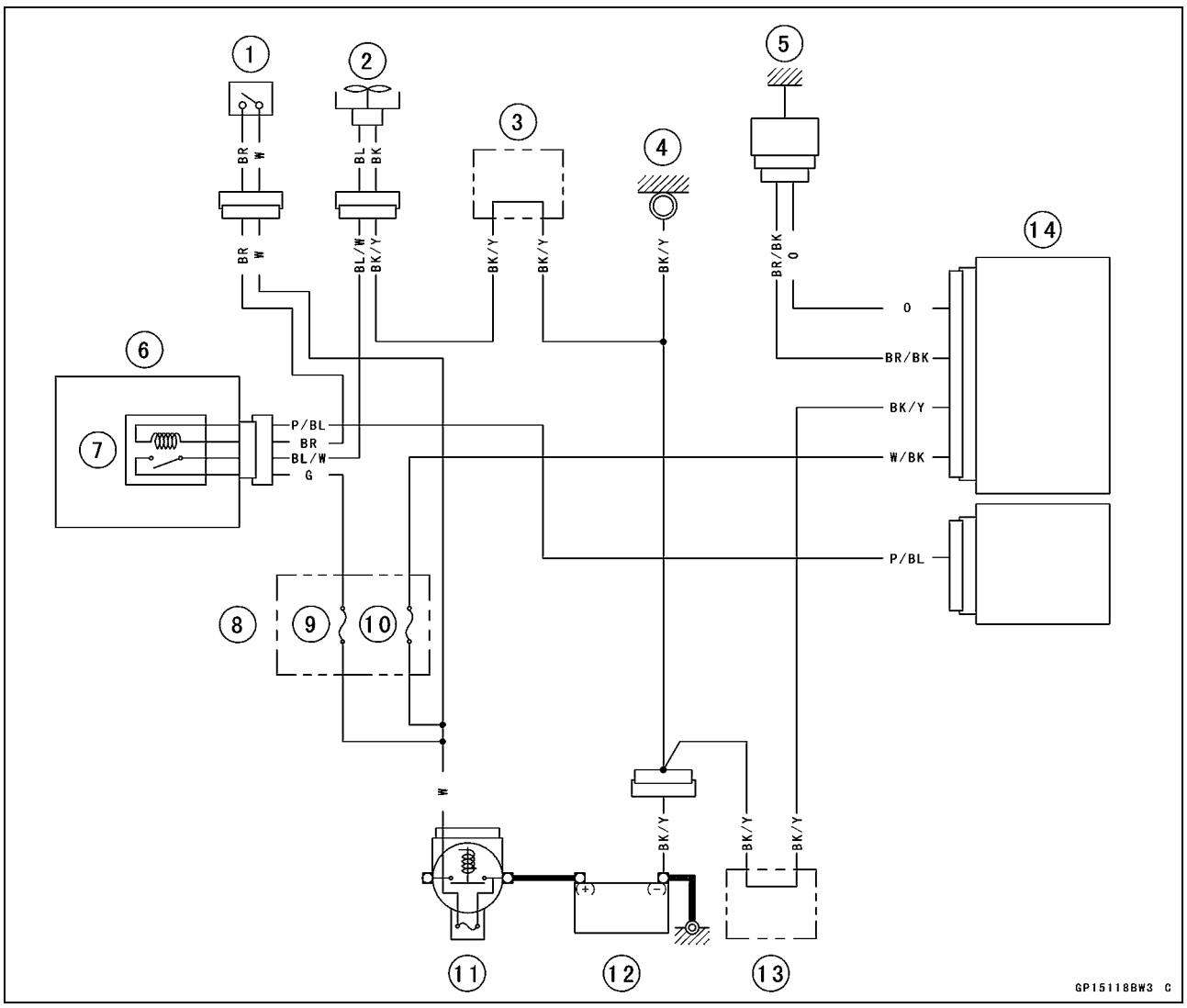

1. Ignition Switch
2. Radiator Fan Motor
3. Water-proof Joint A
4. Frame Ground
5. Water Temperature Sensor
6. Relay Box
7. Radiator Fan Relay
8. Fuse Box 2
9. Fan Fuse 15 A
10. ECU Fuse 10 A
11. Main Fuse 30 A
12. Battery 12 V 8 Ah
13. Water-proof Joint C
14. ECU

Meter, Gauge, Indicator Unit

Meter Unit Removal/Installation

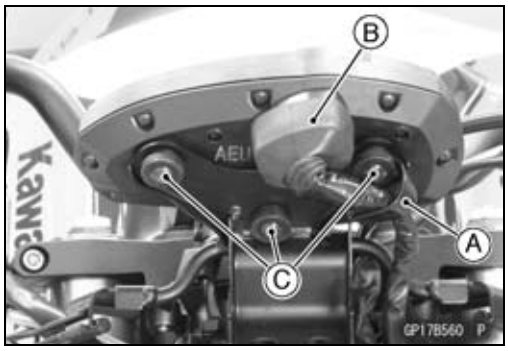

- Remove:
  Upper Fairing (see Upper Fairing Removal in the Frame chapter)
  Immobilizer Amplifier (see Immobilizer System Parts Replacement)
- Open the clamp [A]
- Slide the dust cover [B] and disconnect the connector.
- Remove the meter unit by taking off the mounting screws [C] with the washers and clamp.

NOTICE

Place the meter unit so that the face is up. If a meter unit is left upside down or sideways for any length of time, it will malfunction.

- Installation is the reverse of removal.
- Run the cables, leads and hose correctly (see Cable, Wire, and Hose Routing section in the Appendix chapter).
- Tighten:

Torque - Meter Mounting Screws: 1.2 N·m (0.12 kgf·m, 11 in·lb)

Meter, Gauge Disassembly

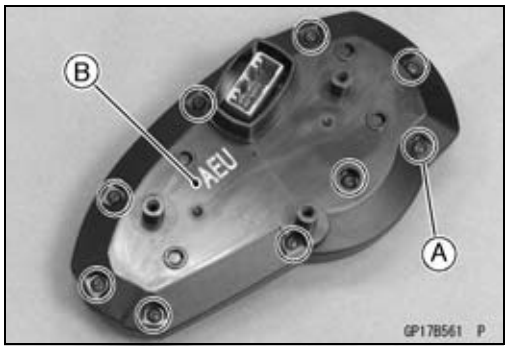

- Remove:
  Meter Unit (see Meter Unit Removal/Installation)
  Screws [A]
  Lower Meter Cover [B]

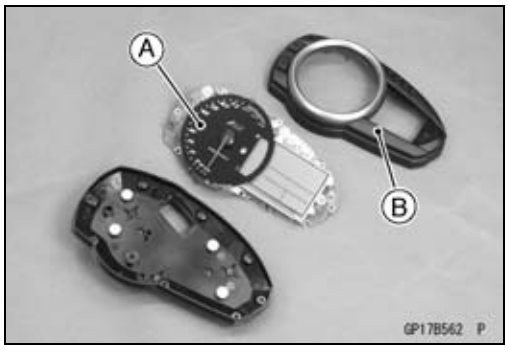

- Separate the meter assembly [A] and upper meter cover [B].

Meter, Gauge, Indicator Unit

Electronic Combination Meter Unit Inspection

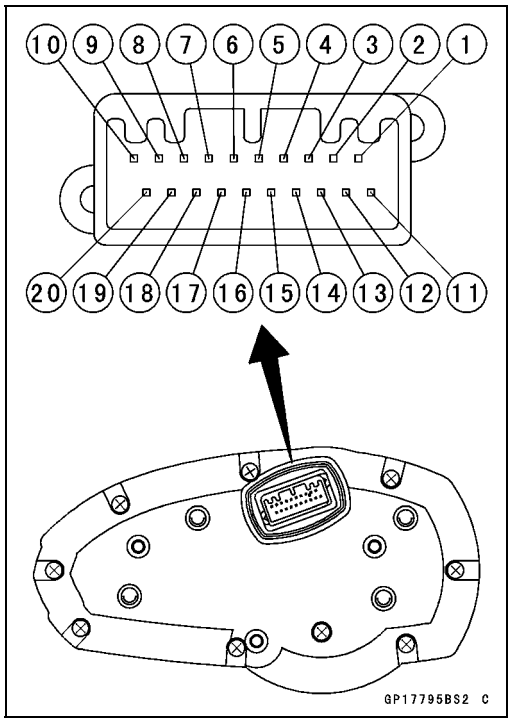

- Remove the meter unit (see Meter Unit Removal/Installation).
  [1] Left Turn Signal Indicator Light (LED) (+)
  [2] Unused
  [3] Unused
  [4] Unused
  [5] Unused
  [6] Unused
  [7] Water Temperature Sensor
  [8] High Beam Indicator Light (LED)
  [9] Right Turn Signal Light (LED) (+)
  [10] Neutral Indicator Light (LED) Ground (–)
  [11] ABS Indicator Light (LED) Ground (–) (Equipped Models)
  [12] Ground (–)
  [13] Unused
  [14] Battery (+)
  [15] Ignition
  [16] Fuel Level Sensor
  [17] FI Indicator Light (LED) Ground (–)
  [18] Speed Sensor Pulse
  [19] Tachometer Pulse
  [20] Oil Pressure Warning Indicator Light (LED) Ground (–)

NOTICE

Do not drop the meter unit. Place the meter unit so that it faces upward. If the meter unit is left upside down or sideways for a long time or dropped, it will malfunction. Do not short each terminals.

Check 1: Meter Unit Primary Operation Check

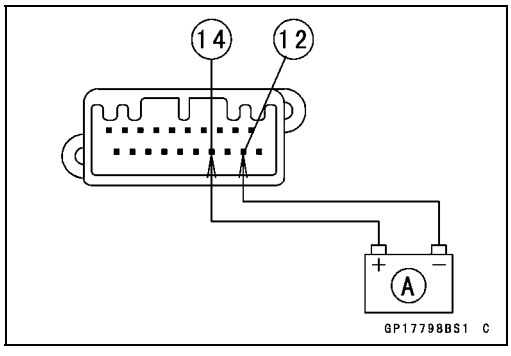

- Using the auxiliary leads, the 12 V battery [A] to the meter unit connector as follows.
  ○Connect the battery positive (+) terminal to the terminal [14].
  ○Connect the battery negative (–) terminal to the terminal [12].

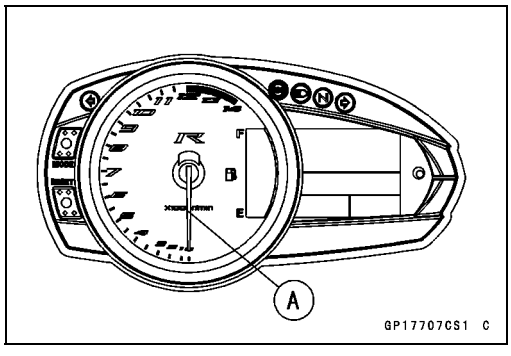

- Check that the tachometer needle [A] momentarily points their last readings and back to the minimum position.

★If the meter unit does not work, replace the meter assembly.

● Connect the terminal [15] to the battery (+) terminal.

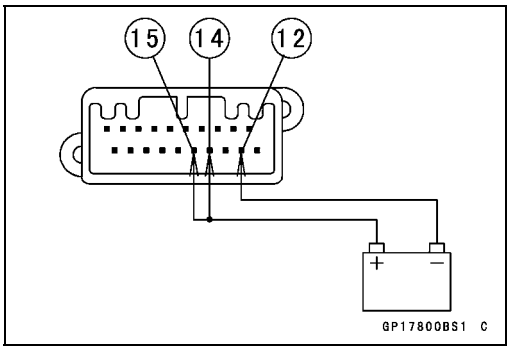

● Check the following items.

○The tachometer needle momentarily points their last readings and back to the minimum position.

○The following LCD (Liquid Crystal Display) will display the action (1, 2, 3) within about 1.5 seconds.

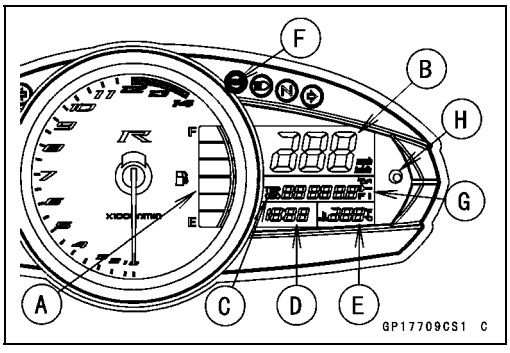

	Fuel Gauge [A]	Speedometer [B], Odometer [C], Clock [D] and Water Temperature Gauge [E]
Action 1	Segments appear from up.	Segments appear from left.
Action 2	Segments disappear from up.	Segments disappear from left.
Action 3	Segments appear from up.	Segments appear from left.

○After the above indication, all the segments appear for one second.

○The all segments of the fuel gauge and FUEL in the display will blink. (This function is Fuel Level Sensor Line Self-Diagnosis Mode. Refer to Fuel Level Sensor Line Self-Diagnosis Mode Inspection.)

○The ABS warning light (LED) [F] goes on. (Equipped Models)

○The FI [G] in the display and warning light (LED) [H] will blink 10 seconds after the terminal 15 is connected.

★If the meter unit does not work, replace the meter assembly.

NOTE

○*Currently, the wiring that relates to blinking has been disconnected for the meter is removed from main harness. Therefore, the above blink has occurred.*

Meter, Gauge, Indicator Unit

● Disconnect the terminal [15].
○All the LCD segments and LED warning lights disappear.
★If the meter unit does not work, replace the meter assembly.

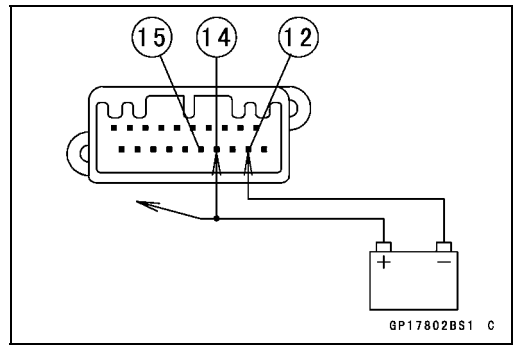

Check 2: Meter Communication Line (Service Code 39) Check

● Connect the leads in the same circuit as Check 1.
● Wait 10 seconds and the “FI” in the display and warning light (LED) blink.

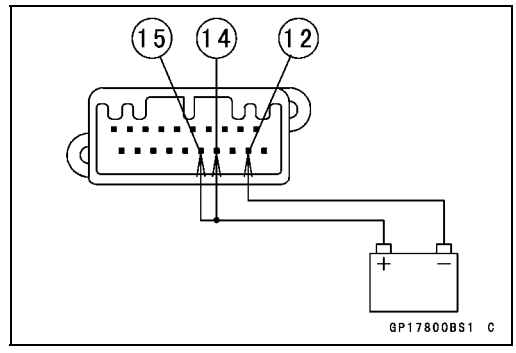

● Set the ODO mode [A] by pushing the MODE button [B].
● Push the MODE button for more than 2 seconds.

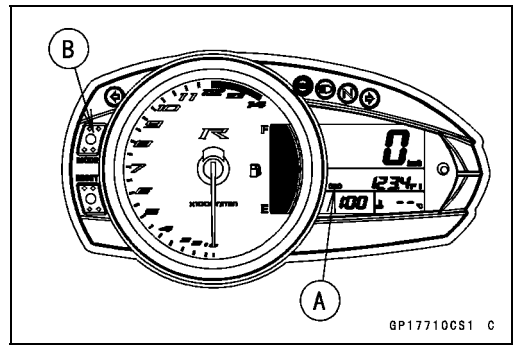

● Check the following items.
○The number 39 [A] and “FI” [B] in the display appear and blink.
○The warning light (LED) [C] blinks.
● Push the MODE button for more than 2 seconds.
● Check the following items.
○The display returns ODO mode from number 39.
○The “FI” in the display and warning light (LED) blink.
★If the meter unit does not work, replace the meter assembly.

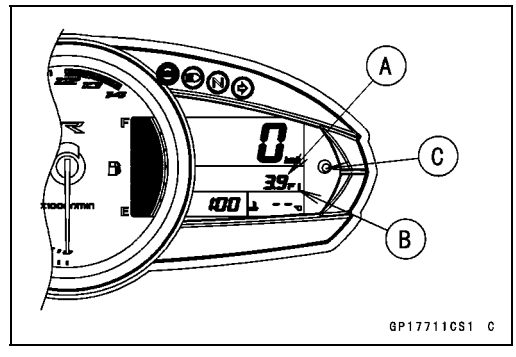

NOTE

○*The number 39 is service code of Self-Diagnosis (see Fuel System chapter). It is the service code of the meter communication line error.*
○*The number 39 and FI in the display disappear when the meter unit is connected to main harness of the normal motorcycle.*

Check 3: MODE Button Operation Check

- Connect the leads in the same circuit as Check 1.

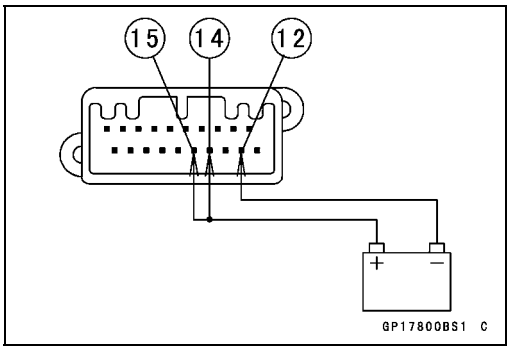

- By pushing the MODE button [A] each time, check that the display [B] changes as follows.

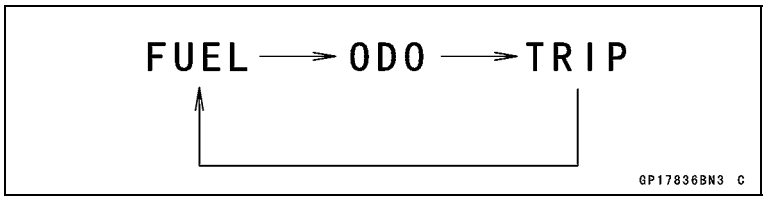

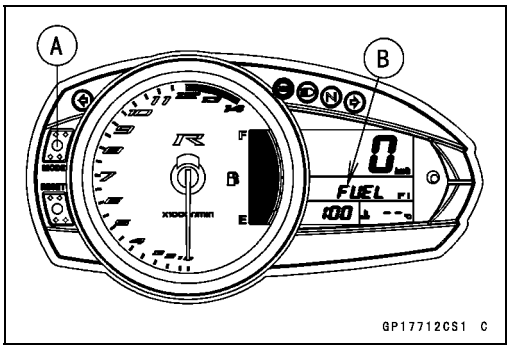

★If the display function does not work, replace the meter assembly.

Check 4: Unit Changing Check

- Connect the leads in the same circuit as Check 1.

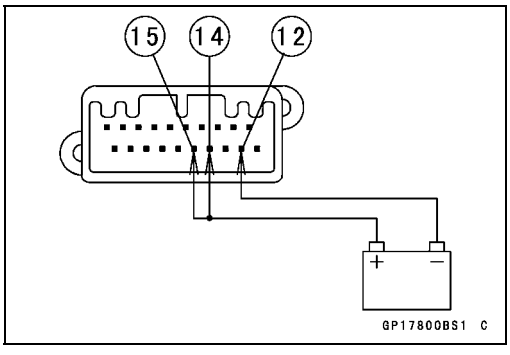

- Set the ODO mode [A] by pushing the MODE button [B].
- During the MODE button pushing, the unit of the distance [C] and temperature [D] change every time the RESET button [E] is pushed within 2 seconds.

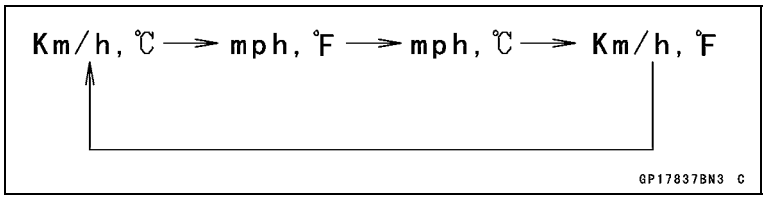

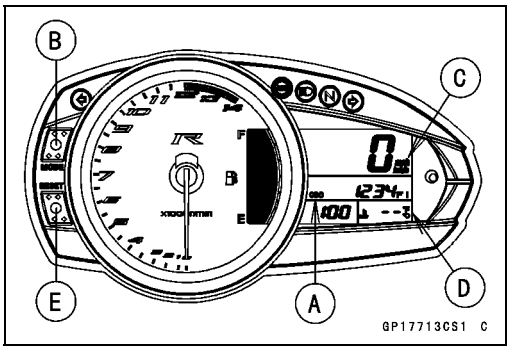

★If the meter function does not work, replace the meter assembly.

Meter, Gauge, Indicator Unit

Check 5: Clock Setting Check

- Connect the leads in the same circuit as Check 1.

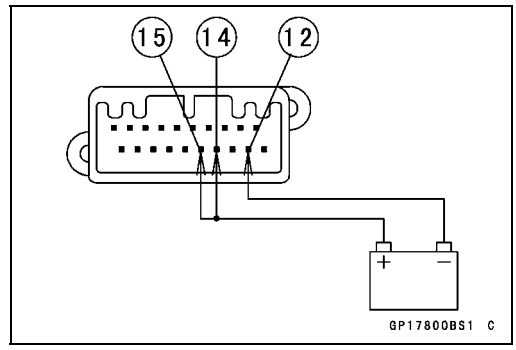

- Set the ODO mode [A] by pushing the MODE button [B].
- Push the RESET button [C] for more than two seconds.

○The clock setting menu (hour and minute) [D] should blink.

- Push the RESET button.

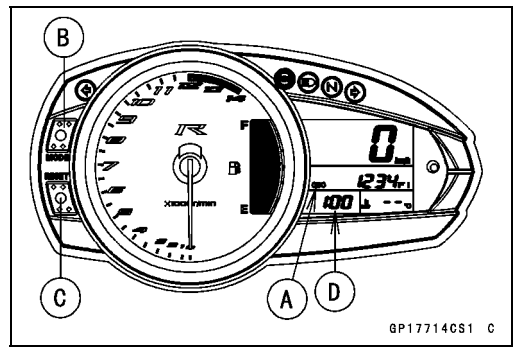

○The hour display [A] starts blinking.

- By pushing the MODE button each time, check that the hour display changes.

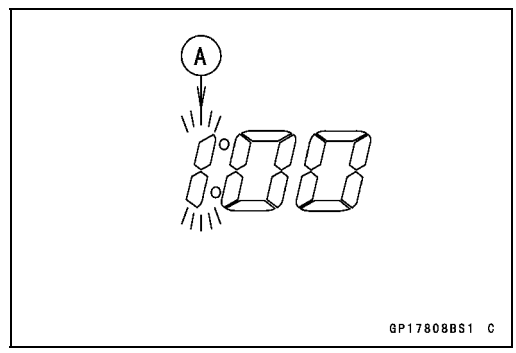

- By pushing the RESET button, check that the hour display decides and minute display [A] starts blinking.
- By pushing the MODE button each time, check that the minute display changes.

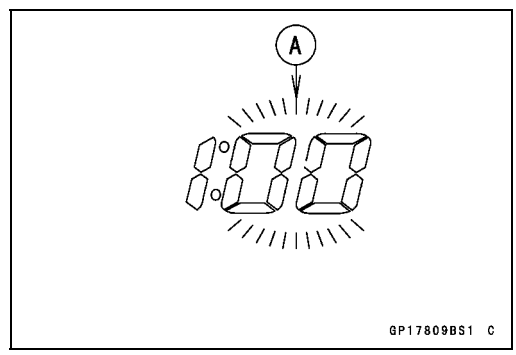

- By pushing the RESET button, check that the hour and minute display start blinking.
- By pushing the MODE button, check that the hour and minute display decide.
- When both hour and minute display is blinking, by pushing the RESET button, check that the hour display start blinking. This blinking returns the hour setting display.

★If the display function does not work, replace the meter assembly.

○If the terminal 15 disconnected when the clock is setting, clock is set at time of that time.

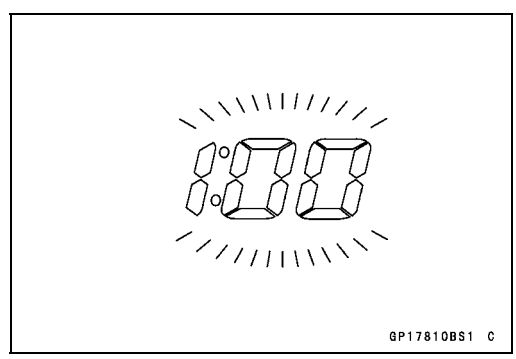

Check 6: Immobilizer Blinking Mode Inspection

- Connect the leads in the same circuit as Check 1.
- Disconnect the terminal [15].

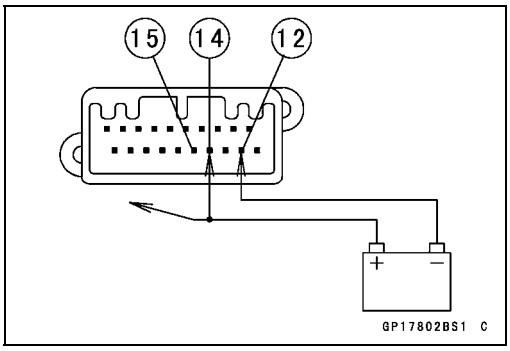

- Check that the warning light (LED) [A] starts blinking (Immobilizer Warning Light Blinking Mode).
- Push the MODE [B] and RESET [C] buttons more than 2 second, within 20 seconds after the terminal [15] disconnected.
- Check that the warning light (LED) goes on one second, and then the light goes off (Immobilizer Warning Light No Blinking Mode).

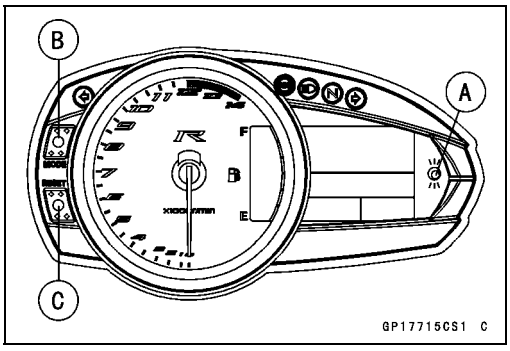

NOTE

○*For this inspection, be sure the battery is 12.2 V or more. Immobilizer Warning Light Blinking Mode does not work, when the battery voltage is less than 12 ±0.2 V.*

- Connect the terminal [15] to the battery (+) terminal.
- And then, disconnect the terminal [15].

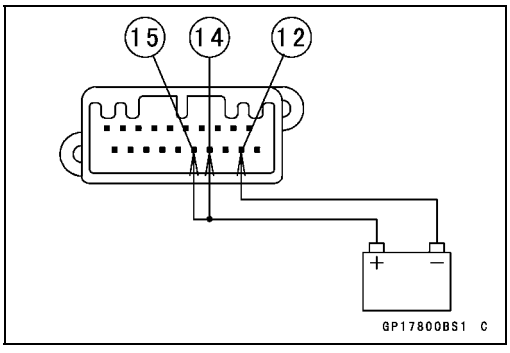

- Push the MODE [A] and RESET [B] buttons more than 2 second, within 20 seconds after the terminal [15] disconnected.
- Check that the warning light (LED) [C] goes on one second, and then the light starts blinking (Immobilizer Warning Light Blinking Mode).

★If the meter function does not work, replace the meter assembly.

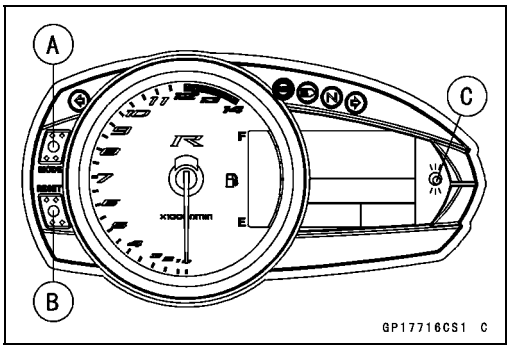

Meter, Gauge, Indicator Unit

Check 7: Left Turn Signal Indicator Light (LED) Inspection

- Connect the leads in the same circuit as Check 1.
- Connect the terminal [1] to the battery (+) terminal.

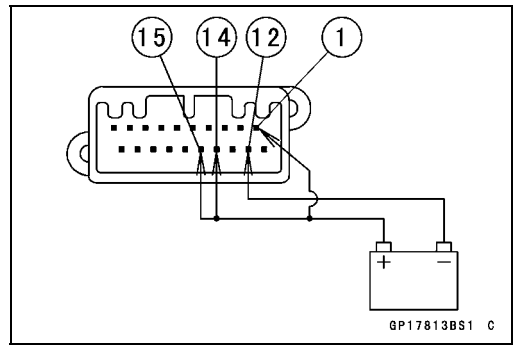

- Check that the left turn signal indicator light (LED) [A] goes on.

★If the indicator light (LED) does not go on, replace the meter assembly.

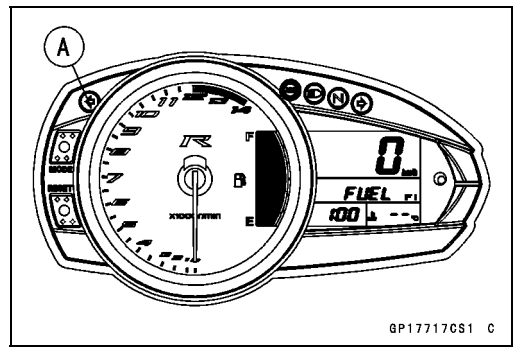

Check 8: High Beam Indicator Light (LED) Inspection

- Connect the leads in the same circuit as Check 1.
- Connect the terminal [8] to the battery (+) terminal.

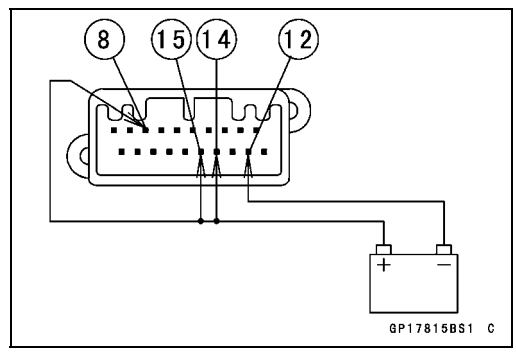

- Check that the high beam indicator light (LED) [A] goes on.

★If the indicator light (LED) does not go on, replace the meter assembly.

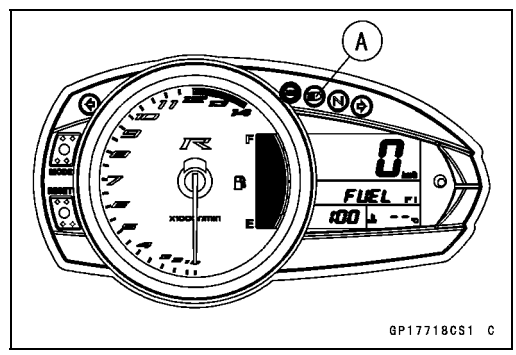

Check 9: Right Turn Signal Indicator Light (LED) Inspection

- Connect the leads in the same circuit as Check 1.
- Connect the terminal [9] to the battery (+) terminal.

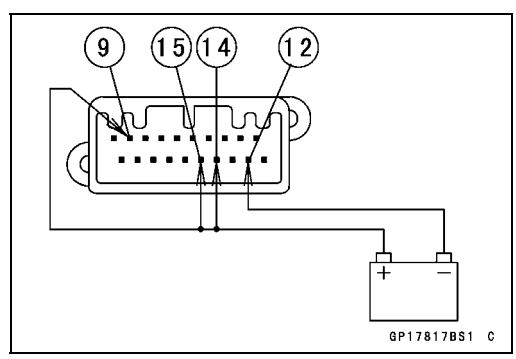

- Check that the right turn signal indicator light (LED) [A] goes on.

★If the indicator light (LED) does not go on, replace the meter assembly.

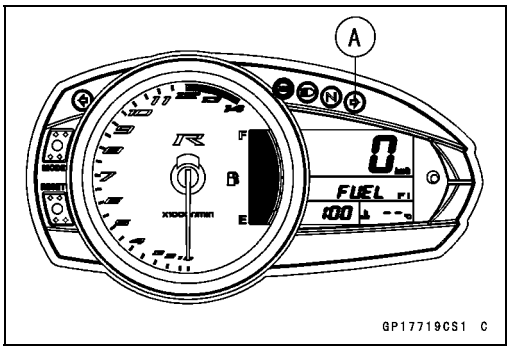

Check 10: Neutral Indicator Light (LED) Inspection

- Connect the leads in the same circuit as Check 1.
- Connect the terminal [10] to the battery (–) terminal.

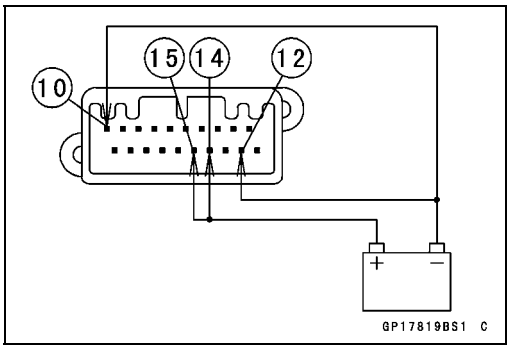

- Check that the neutral indicator light (LED) [A] goes on.

★If the indicator light (LED) does not go on, replace the meter assembly.

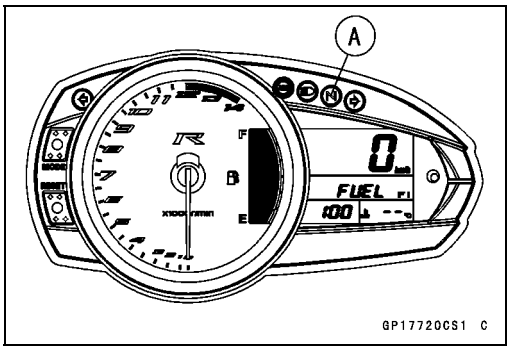

Check 11: ABS Indicator Light (LED) Inspection (Equipped Models)

- Connect the leads in the same circuit as Check 1.

○The ABS warning light (LED) goes on.

- Connect the terminal [11] to the battery (–) terminal.

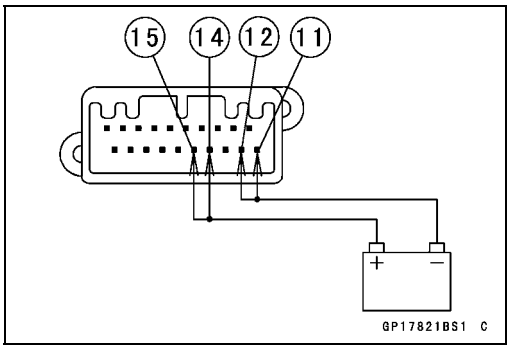

- Check that the ABS warning light (LED) [A] goes off.

★If the indicator light (LED) does not go off, replace the meter assembly.

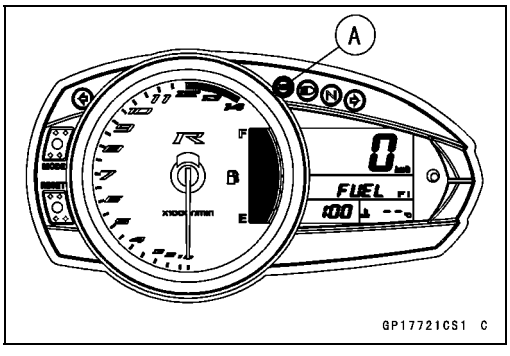

Meter, Gauge, Indicator Unit

Check 12: Oil Pressure Warning Indicator Light (LED) Inspection

- Connect the leads in the same circuit as Check 1.
- Connect the terminal [20] to the battery (–) terminal.

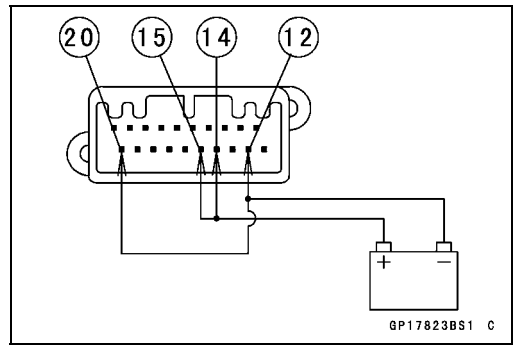

- Check that the oil symbol [A] and oil pressure warning indicator light (LED) [B] blink.

★If the oil symbol and indicator light (LED) do not blink, replace the meter assembly.

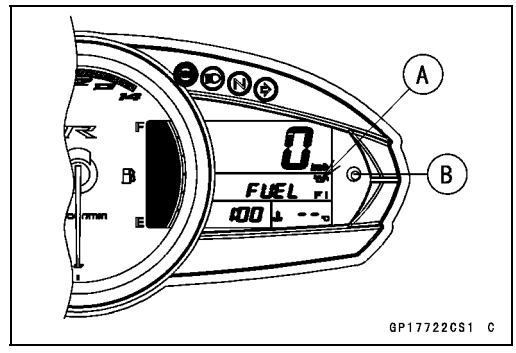

Check 13: Water Temperature Meter Inspection

- Connect the leads in the same circuit as Check 1.

○The "– –" indication in the display of the water temperature meter appears.

- Connect the terminal [7] to the battery (–) terminal.

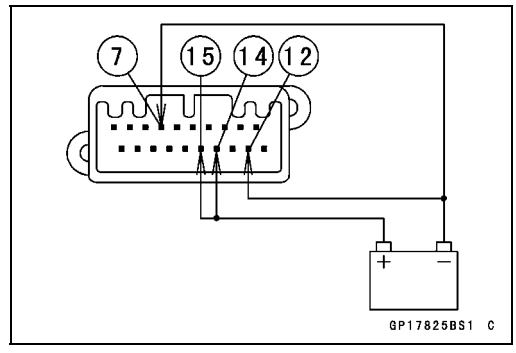

- Check that the display of the water temperature meter [A] changes from "– –" to "HI".

★If the water temperature meter does not work, replace the meter assembly.

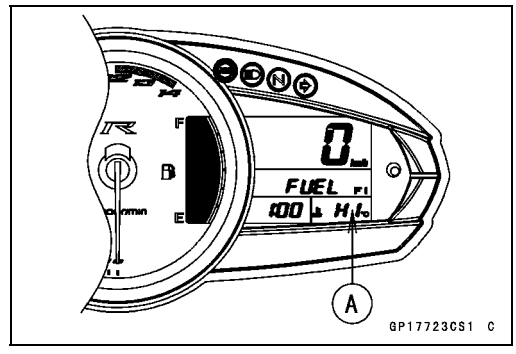

- Connect the resister [A] (about 210 Ω) to the terminal [7] and the battery (–) terminal.

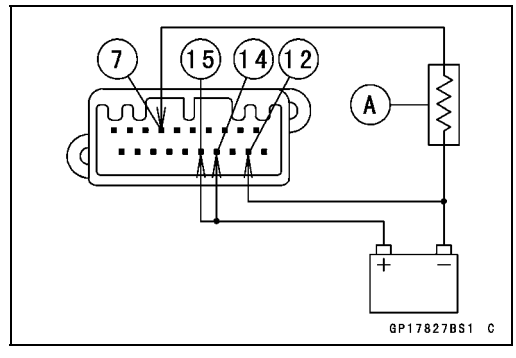

Meter, Gauge, Indicator Unit

- Check that the display of the water temperature meter [A] indicates approximately 50°C (122°F).

★If the water temperature meter does not indicate temperature, replace the meter assembly.

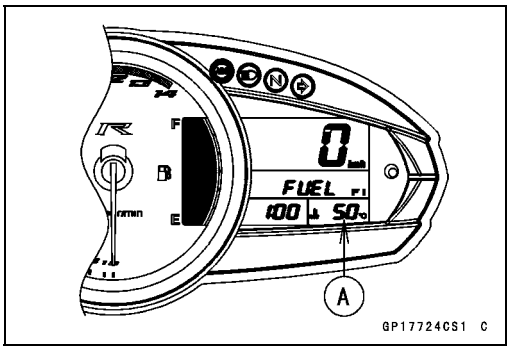

Check 14: Fuel Gauge Inspection

- Connect the leads in the same circuit as Check 1.

○The all segments of the fuel gauge and “FUEL” in the display will blink.

- Connect the variable rheostat [A] to the terminal [16] and the battery (–) terminal.

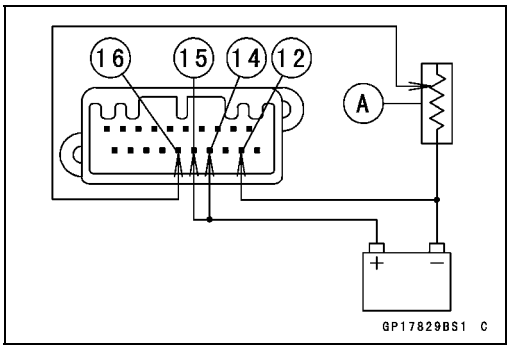

- Check that the segments number of the fuel level gauge [A] matches the resistance value of the variable rheostat.

○When the terminal [16] is connected, one segment in the fuel level gauge should appear about every 15 seconds.

Variable Rheostat Resistance (Ω)	Display Condition
10	6 segments go on
about 80	1 segment goes on
100	1 segment and “FUEL” blink

★If the display function does not work, replace the meter assembly.

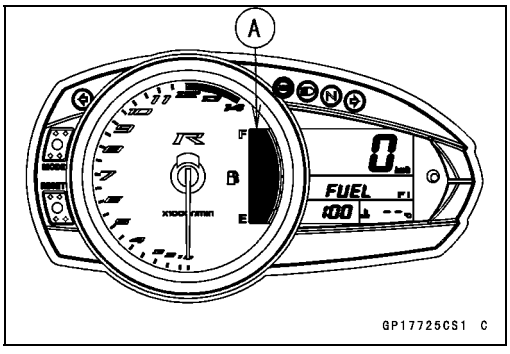

Meter, Gauge, Indicator Unit

Check 15: Speedometer Inspection

- Connect the leads in the same circuit as Check 1.
- The speed equivalent to the input frequency is indicated in the oscillator [A], if the square wave is input into terminal [18].

○Indicates approximately 60 km/h if the input frequency is approximately 560 Hz.
○Indicates approximately 60 mph if the input frequency is approximately 896 Hz.
★If the meter function does not work, replace the meter assembly.

NOTE

○*The input frequency of the oscillator adds the integrated value of the odometer.*
○*The integrated value of the odometer cannot be reset.*

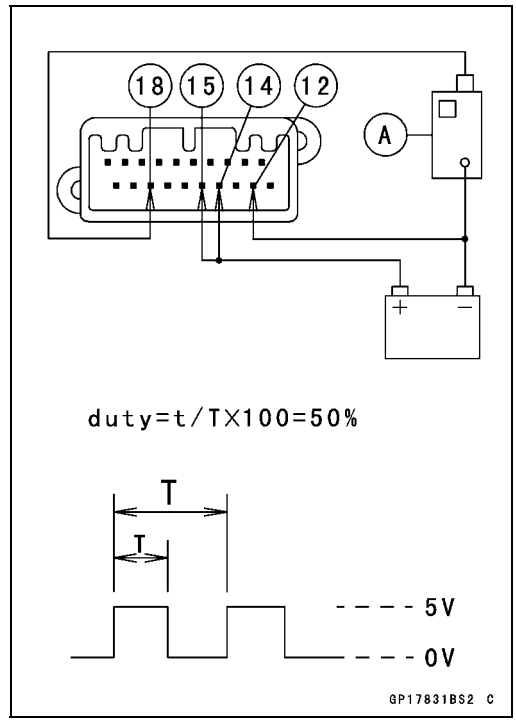

Check 16: Odometer Inspection

- Connect the leads in the same circuit as Check 15.
- Set the ODO mode [A] by pushing the MODE button [B].
- Raise the input frequency of the oscillator to see the result of this inspection.

○Example: Indicates the increase of approximately 1 km/h, if the input frequency is approximately 525 Hz for one minute.
○Example: Indicates the increase of approximately 1 mile, if the input frequency is approximately 840 Hz for one minute.
★If the value indicated by the odometer does not increase, replace the meter assembly.

NOTE

○*The integrated value of the odometer cannot be reset.*

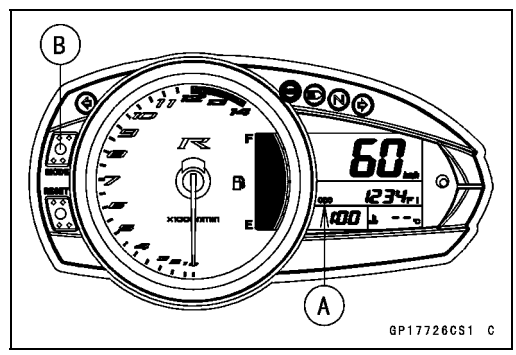

Check 17: Trip Meter Inspection

- Connect the leads in the same circuit as Check 15.
- Set the TRIP mode [A] by pushing the MODE button [B].
- Raise the input frequency of the oscillator to see the result of odometer inspection.

★If the value indicated by the trip meter does not increase, replace the meter assembly.

- When pushing the RESET button [C] for more than two seconds, check that the display changes 0.0.

★If the display function does not change, replace the meter assembly.

NOTE

○*The integrated value of the odometer cannot be reset.*

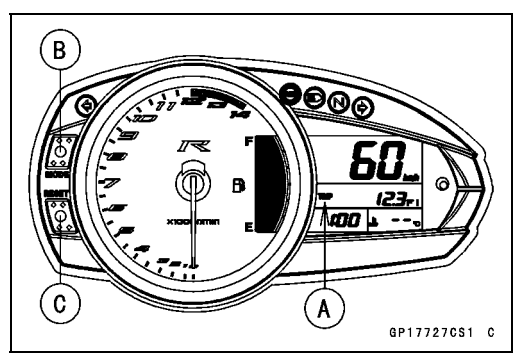

Check 18: Tachometer Inspection

- Connect the leads in the same circuit as Check 1.
- The engine speed (rpm) equivalent to the input frequency is indicated in the oscillator [A], if the square wave is input into terminal [19].

○Indicates approximately 4 000 rpm if the input frequency is approximately 133.3 Hz.

★If the meter function does not work, replace the meter assembly.

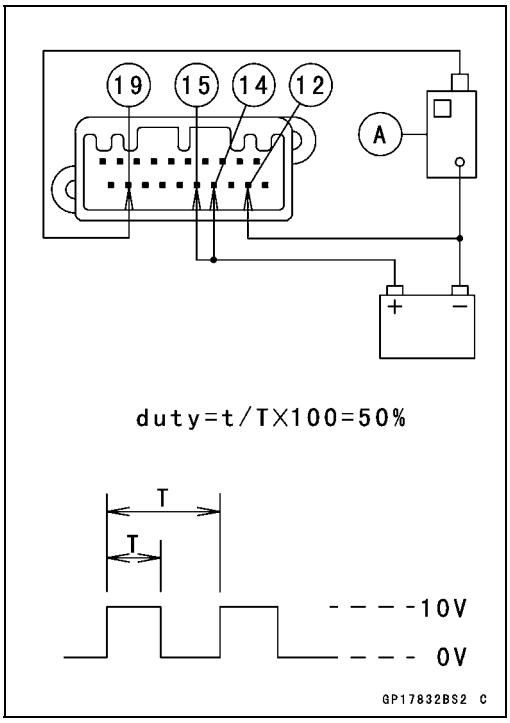

- Disconnect the terminal [15].
- Check that the tachometer needle [A] back to the minimum (0) position.

★If the meter unit does not work, replace the meter assembly.

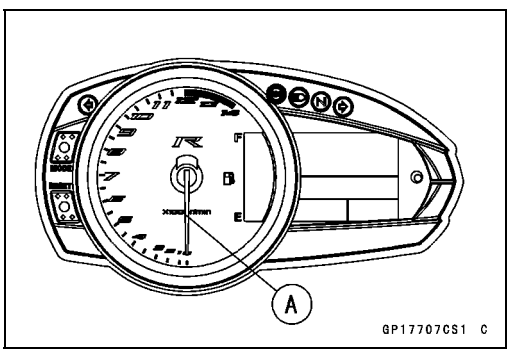

Fuel Level Sensor Line Self-Diagnosis Mode Inspection

NOTE

○*Usually when the open or short of the fuel level sensor circuit is detected, it becomes the Fuel Level Sensor Line Self-Diagnosis Mode.*

○The all segments of the fuel gauge [A] and FUEL [B] in the display will blink. (This function is Fuel Level Sensor Line Self-Diagnosis Mode.)

★If the meter enters the self-diagnostic mode when the meter is installed in the motorcycle, check the fuel level sensor (see Fuel Level Sensor Inspection) and wiring.

★If the fuel level sensor and wiring are good, replace the meter assembly.

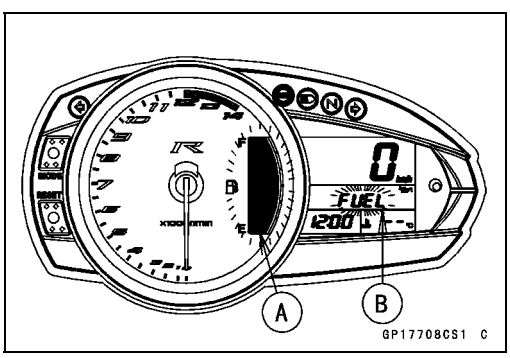

Meter, Gauge, Indicator Unit

Meter Circuit

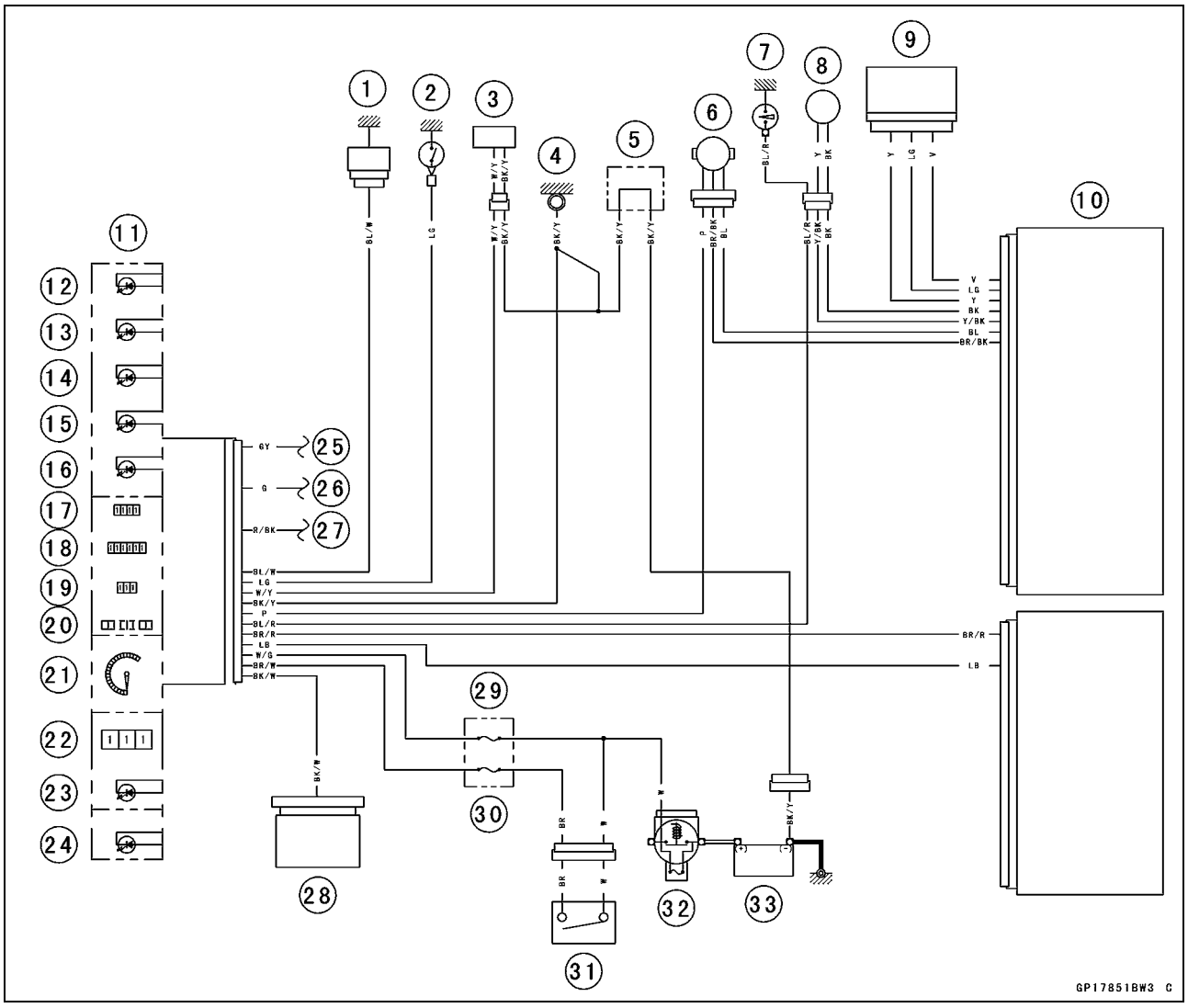

1. Water Temperature Sensor
2. Neutral Switch
3. Fuel Level Sensor
4. Meter Ground
5. Water-proof Joint C
6. Speed Sensor
7. Oil Pressure Switch
8. Crankshaft Sensor
9. Immobilizer Amplifier
10. ECU
11. Meter Unit
12. Right Turn Signal Indicator Light (LED)
13. High Beam Indicator Light (LED)
14. Neutral Indicator Light (LED)
15. Oil Pressure/FI/Immobilizer Warning Indicator Light (LED)
16. ABS Indicator Light (LED) (Equipped Models)
17. Clock
18. Odometer/Trip Meter
19. Water Temperature Meter
20. Fuel Gauge
21. Tachometer
22. Speedometer
23. Meter Illumination Light (LED)
24. Left Turn Signal Indicator Light (LED)
25. Turn Signal Switch (Right)
26. Turn Signal Switch (Left)
27. Dimmer Switch
28. ABS Hydraulic Unit (Equipped Models)
29. Meter Fuse 10 A
30. Ignition Fuse 10 A
31. Ignition Switch
32. Main Fuse 30 A
33. Battery 12 V 8 Ah

Immobilizer System

This motorcycle is equipped with an immobilizer system to protect the motorcycle from theft. This system provides a theft proof device by means of matching a code between the inbuilt key transponder and ECU (Electronic Control Unit). If the code does not match, ignition system, injectors and subthrottle valve actuator will not operate and the engine will not start.

Abstract

- Do not keep more than one immobilizer key of any system on a key ring. Jamming of the key code signal may occur and the operation of the system may be affected.
- The warning indicator light (LED) will blink for a period of 24 hours once the ignition switch has been switched off and the key removed. This blinking can be set to on or off as desired by holding the Mode and Reset buttons down for two seconds within twenty seconds of switching the ignition off.
- If all coded keys are lost the ECU and ignition switch will have to be replaced.
- The immobilizer system can not function until the ignition key code is registered in the ECU.
- A total of five keys can be registered in the ECU at any one time.

Operational Cautions

1. Do not put two keys of any immobilizer system on the same key ring.
2. Do not submerge any key in water.
3. Do not expose any key to excessively high temperature.
4. Do not place any key close to magnet.
5. Do not place a heavy item on any key.
6. Do not grind any key or alter its shape.
7. Do not disassemble the plastic part of any key.
8. Do not drop the key and/or apply any shocks to the key.
9. When an ignition key is lost, the user should go to his dealer to invalidate the lost key registration in the ECU.
10. When all ignition keys are lost, the user should go to his dealer and have a new ECU installed and register the ignition keys.

NOTE

○*No.9 and 10 are strongly recommended to the customer to ensure security of the motorcycle.*

Key Registration

Case 1: When additional spare ignition key is required.

- Prepare a new spare ignition key.
- Cut the key in accordance with the shape of the current ignition key.
- Remove:
  Rear Seat (see Rear Seat Removal in the Frame chapter)
- Remove the immobilizer/Kawasaki diagnostic system connector cap [A].

- Connect the key registration unit [A] and key registration adapter [B] as shown in the figure.
  Immobilizer/Kawasaki Diagnosis System Connector [C]

Special Tools - Key Registration Unit: 57001-1582
Key Registration Adapter: 57001-1746

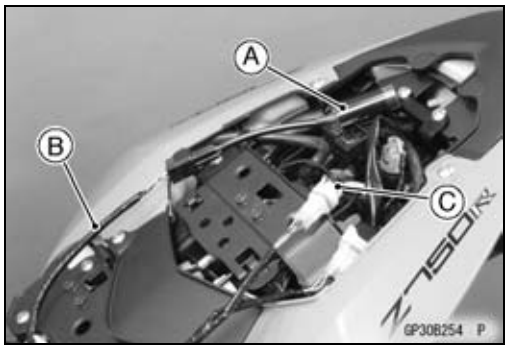

Immobilizer System

- Insert the registered ignition key to the ignition switch and turn it to ON.

Verified

○The warning indicator light (LED) [A] blinks to display the registration mode (go to the next step).

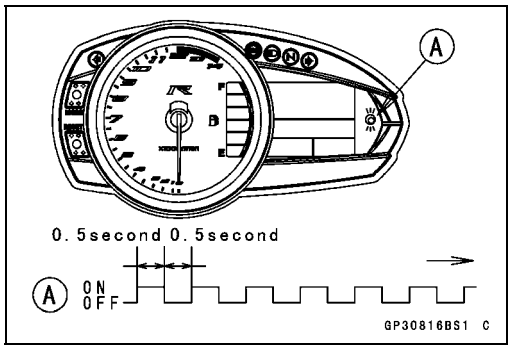

Not Verified

○The warning indicator light (LED) [A] blinks to display the collation error (refer to the following failure illustrations).

Immobilizer Amplifier Failure

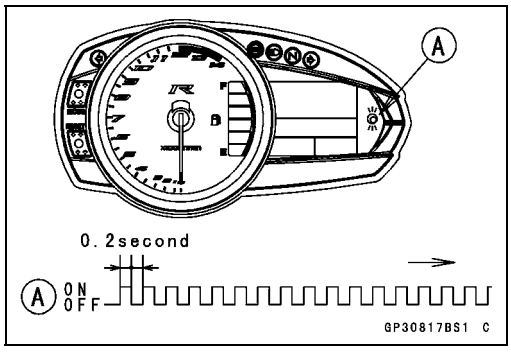

Registered Ignition Key Collation Error

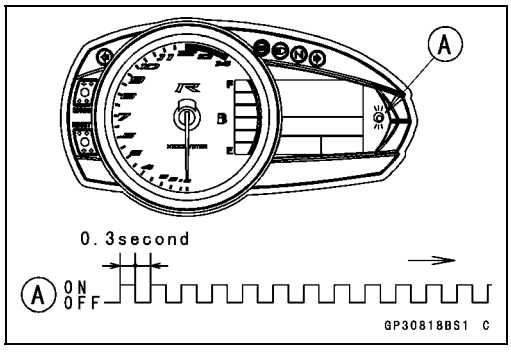

- Turn the registered ignition key to OFF and remove the registered ignition key.

★If there are other registered ignition keys, they should all do the procedure above.

○The warning indicator light (LED) [A] blinks continuously to display that the ECU is in the registration mode for 15 seconds.

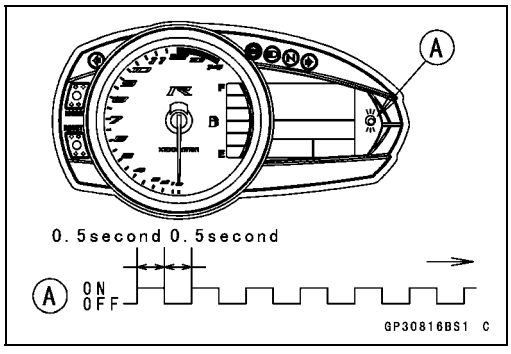

NOTE

○*Insert next key and turn it to ON within 15 seconds after previous key is turned OFF and removed otherwise registration mode will be ended and the warning indicator light (LED) stops blinking.*

○*To return to the registration mode start the registered ignition key(s) verification procedure. This applies to all ignition key registration.*

- Insert the ignition key 1 to the ignition switch and turn it to ON.

NOTE

○*Keep the other ignition key away from the immobilizer antenna.*

Immobilizer System

○If there is any problem in the registration, the warning indicator light (LED) [A] blinks to display the collation error.

Immobilizer Amplifier Failure

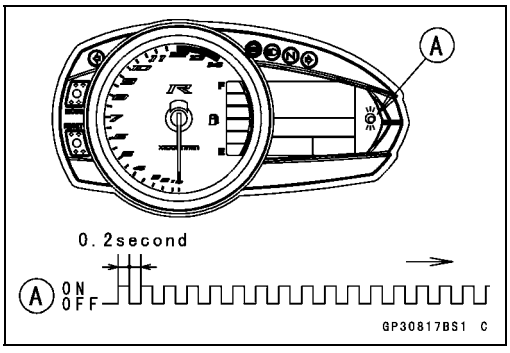

When Registered Ignition Key is Inserted.

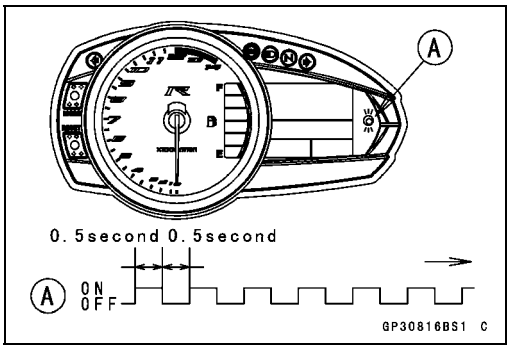

Ignition Key Collation Error

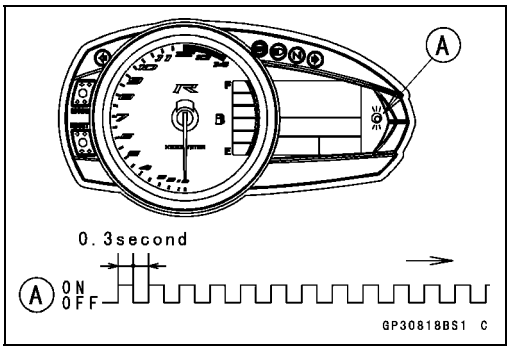

● The ignition key 1 is successfully registered in the ECU.

○The warning indicator light (LED) [A] blinks 3 times and stops for 1 second and then repeats this cycle.

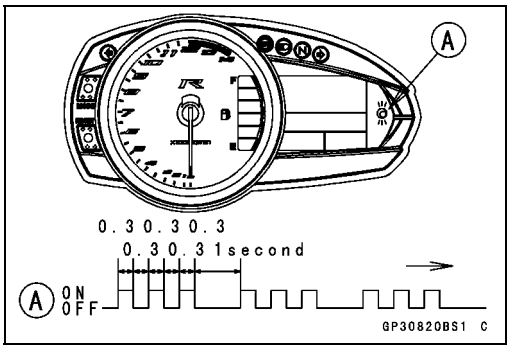

● Turn the ignition key 1 to OFF and remove the ignition key 1.

○The warning indicator light (LED) [A] blinks to display the registration mode.

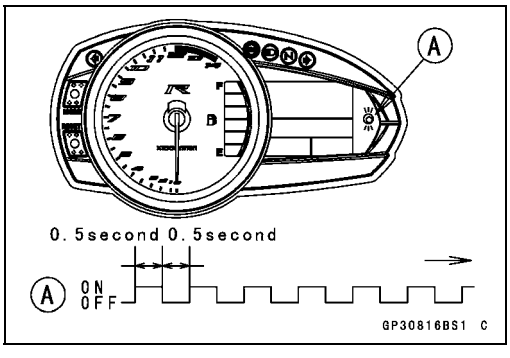

NOTE

○*Turn OFF the ignition switch and wait for the period of 15 seconds or more. The registration mode automatically finishes and the warning indicator light (LED) will switch off.*

○*This procedure registered the registered ignition key and one ignition key.*

○*Continue with the procedure to register the second and later keys before the 15 seconds period has elapsed.*

Immobilizer System

- Insert the ignition key 2 to the ignition switch and turn it to ON.

○If there is any problem in the registration, the warning indicator light (LED) [A] blinks to display the collation error.

Immobilizer Amplifier Failure

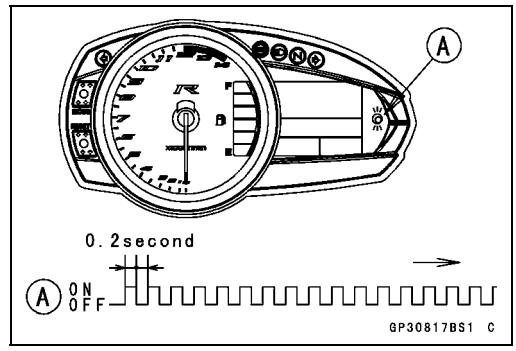

When Registered Ignition Key is Inserted.

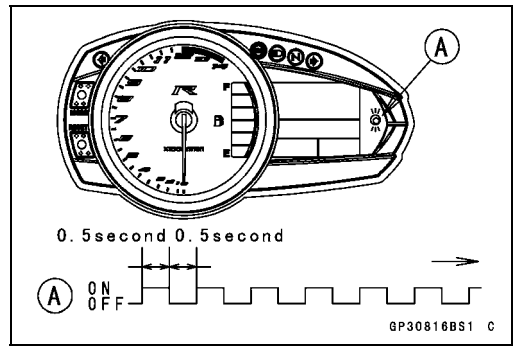

Ignition Key Collation Error

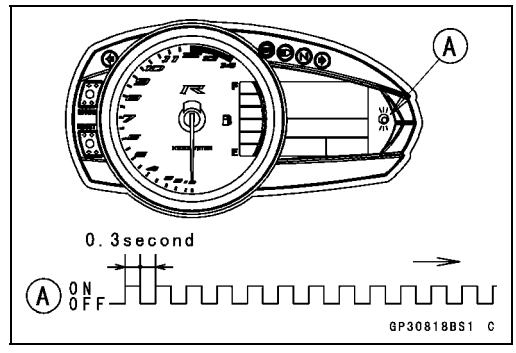

- The ignition key 2 is registered in the ECU.

○The warning indicator light (LED) [A] blinks 4 times and stops for 1 second and then repeats this cycle.

○This procedure has registered the 2 ignition keys.

- Continue with the procedure to register an additional one ignition key.

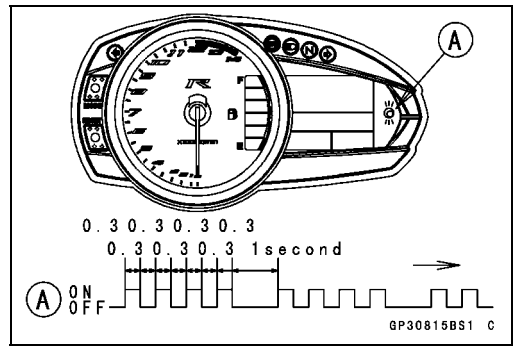

NOTE

○*The ECU can store up the five key codes.*

New Ignition Key Indicator Blinks

	Indicator Light Blinks	Indicator Light Stop	Remarks
Ignition Key 3	5 times	1 seconds	Repeat

- Turn OFF the ignition switch and wait for period of more than 15 seconds.
- The registration mode automatically ends.

- Warning indicator light (LED) [A] goes off.

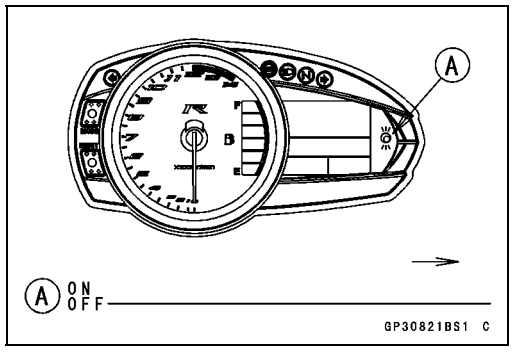

- Remove the key registration unit connection cable and install the immobilizer Kawasaki diagnostic system connector cap.

NOTE

○ *Turn the ignition switch to ON with the registered ignition key.*

○ *Check that the engine can be started using all registered ignition keys.*

Immobilizer System

Spare Ignition Key Registration Flow Chart

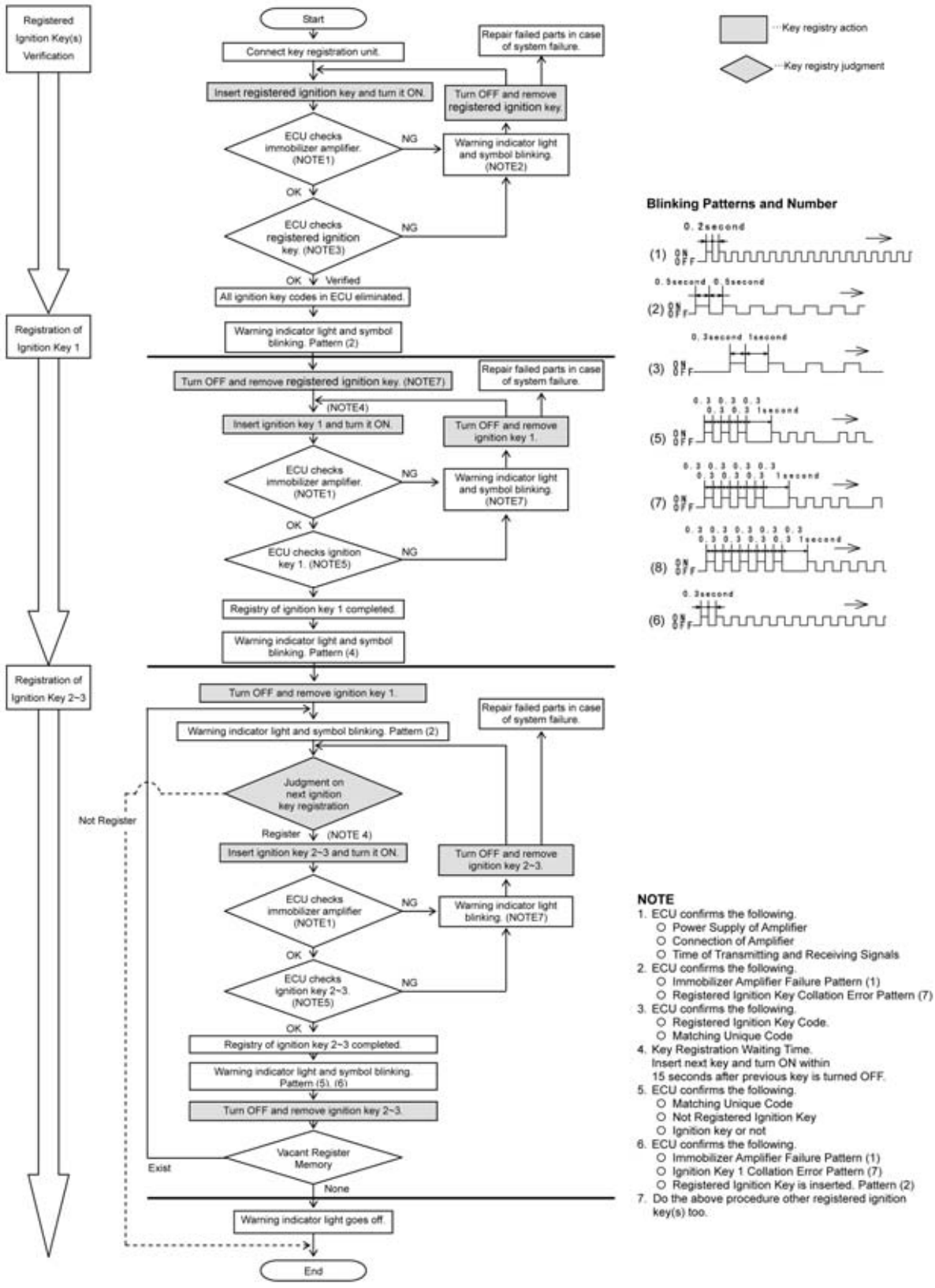

Case 2: When the ignition switch is faulty and to be replaced.

- Prepare a new ignition switch [A] and two new ignition keys [B].

○These parts are available as a set. Prepare the current registered ignition key [C].

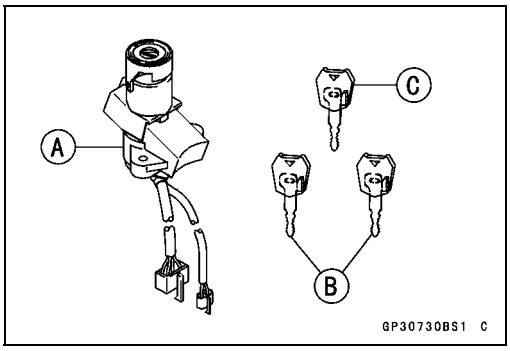

- Remove:
  Ignition Switch and Immobilizer Antenna (see Immobilizer System Parts Replacement)
  Rear Seat (see Rear Seat Removal in the Frame chapter)
- Remove the immobilizer/Kawasaki diagnostic system connector cap [A].

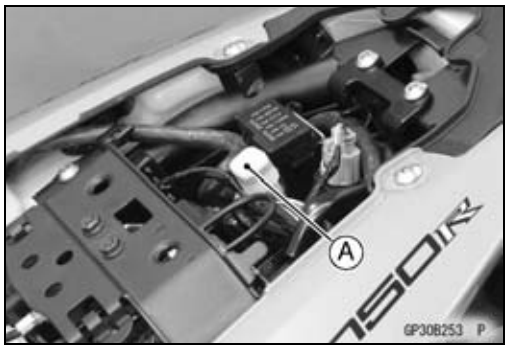

- Connect the key registration unit [A] and key registration adapter [B] as shown in the figure.
  Immobilizer/Kawasaki Diagnosis System Connector [C]

Special Tools - Key Registration Unit: 57001-1582
Key Registration Adapter: 57001-1746

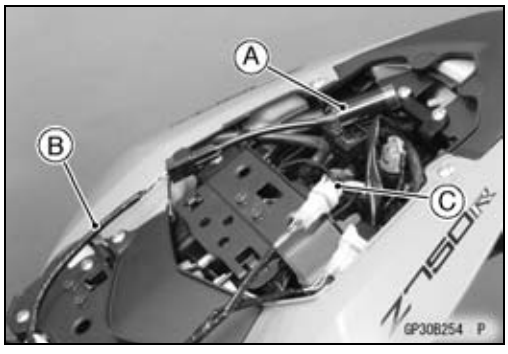

- Connect:
  New Ignition Switch Lead Connector [A]
  Immobilizer Antenna Lead Connector [B]

NOTE

○*Keep the antenna [C] more than 15 cm (5.9 in.) from the ignition switch [D].*

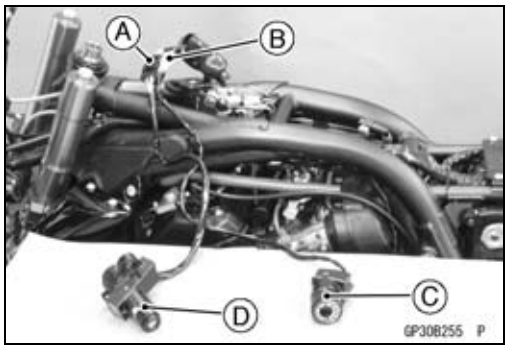

- Put the current registered ignition key [A] at the antenna [B].
- Insert the new ignition key 1 [C] to the new ignition switch [D] and turn it to ON.

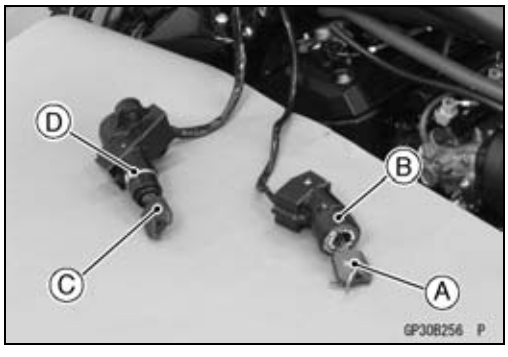

Immobilizer System

Verified

○The warning indicator light (LED) [A] blinks to display the ECU is in the registration mode (go to the next step).

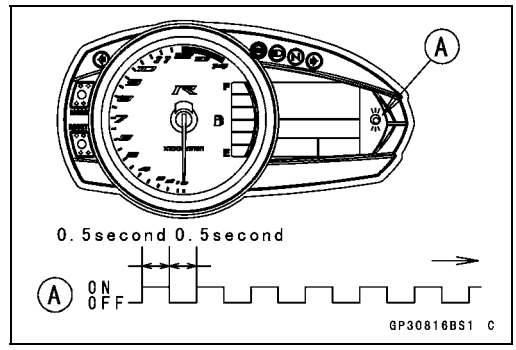

Not Verified

○The warning indicator light (LED) [A] blinks to display the collation error.

Immobilizer Amplifier Failure

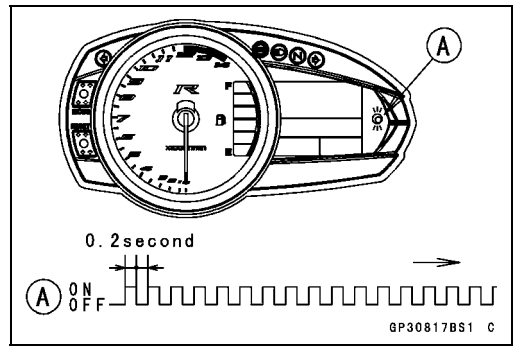

Registered Ignition Key Collation Error

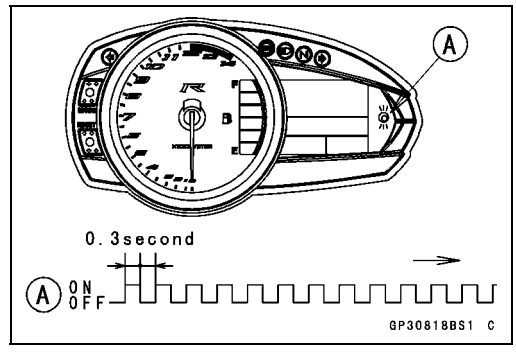

- Turn OFF and remove the new ignition key 1.
- Temporarily place the antenna [A] on the new ignition switch [B].
- Insert the ignition key 1 [C] again into the new ignition switch and turn it to ON.

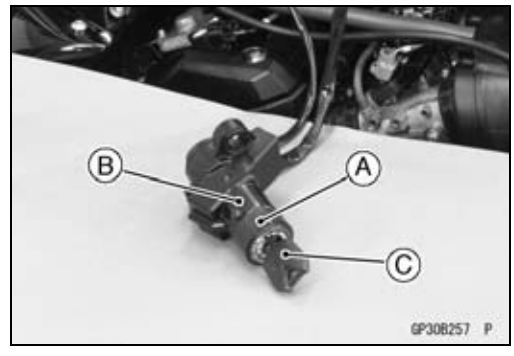

NOTE

○*Place the antenna on the ignition switch, insert the next key and turn it to ON within 15 seconds after previous key is turned OFF and removed otherwise registration mode will be ended and the warning indicator light (LED) stops blinking.*

○*To return to the registration mode start the registered ignition key verification procedure. This applies to all ignition key registration.*

○*Keep other ignition keys away from the immobilizer antenna.*

Immobilizer System

○If there is any problem in the registration, the warning indicator light (LED) [A] blinks to display the collation error.

Immobilizer Amplifier Failure

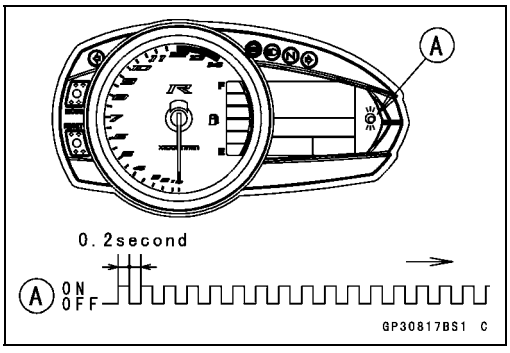

When Registered Ignition Key is Inserted.

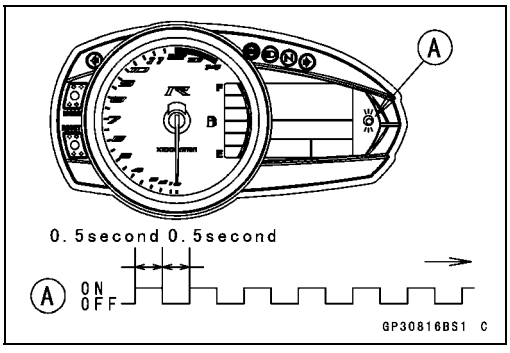

Ignition Key Collation Error

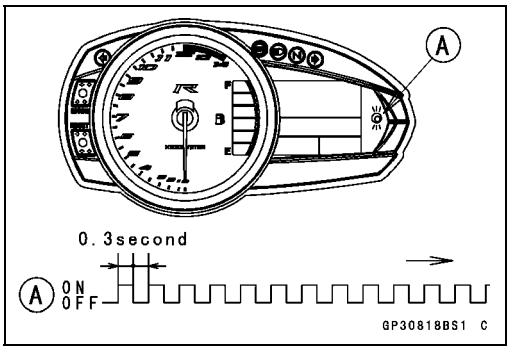

● The ignition key 1 is successfully registered in the ECU.

○The warning indicator light (LED) [A] blinks 3 times and stops for 1 second and then repeats this cycle to indicate successful registering of ignition key 1.

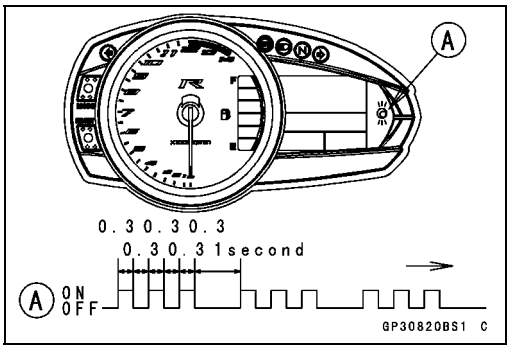

● Turn OFF and remove ignition key 1.

○The warning indicator light (LED) [A] blinks to display the registration mode.

NOTE

○*Turn OFF the ignition switch and wait for the period more than 15 seconds. The registration mode automatically ends and warning indicator light (LED) goes off.*

○*This procedure has, registered the registered ignition key and one ignition key.*

○*Continue the procedure to program the second and later keys.*

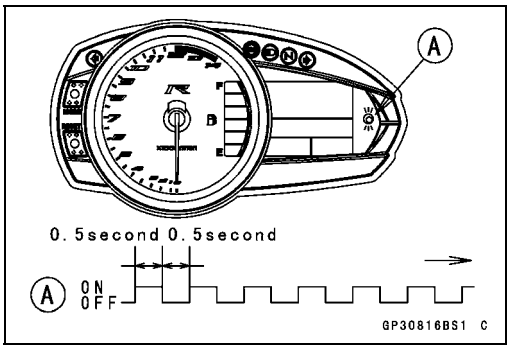

● Insert the ignition key 2 to the ignition switch and turn it to ON.

Immobilizer System

○If there is any problem in the registration, the warning indicator light (LED) [A] blinks to display the collation error.

Immobilizer Amplifier Failure

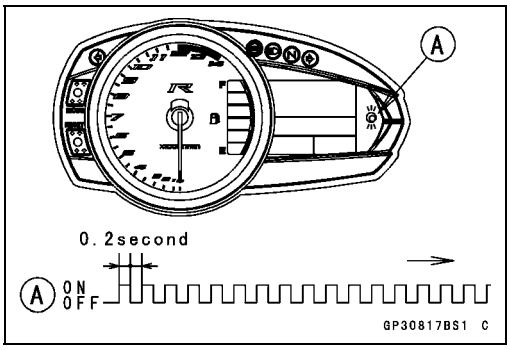

When Registered Ignition Key is Inserted.

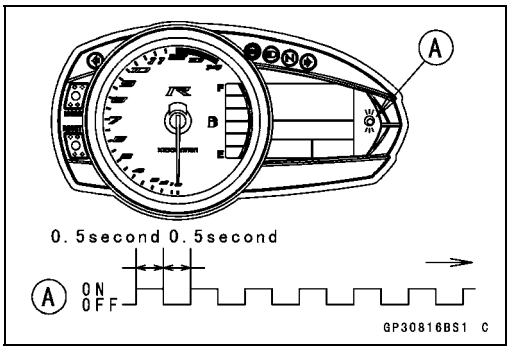

Ignition Key Collation Error

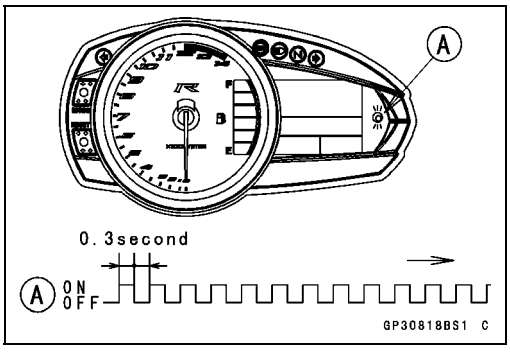

● The ignition key 2 is successfully registered in the ECU.

○The warning indicator light (LED) [A] blinks 4 times and stops for 1 second and then repeat this cycle to indicate successful programming of ignition key 2.

● Turn OFF the ignition switch and wait for period more than 15 seconds.

● The registration mode automatically ends.

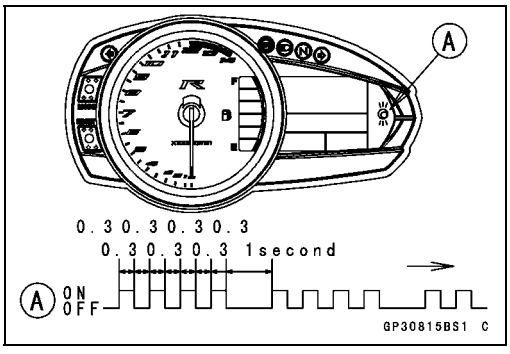

● Warning indicator light (LED) [A] goes off.

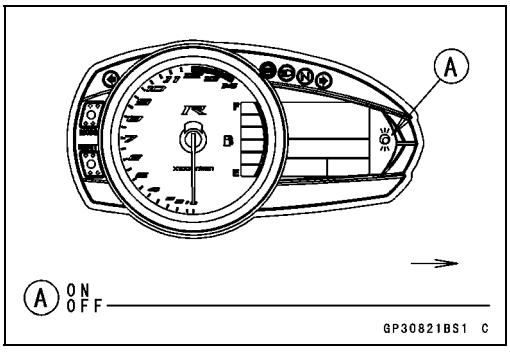

- Remove the key registration unit connection cable and install the immobilizer/Kawasaki diagnostic system connector cap.

NOTE

○*Turn the ignition switch to ON with the registered ignition key.*
○*Check that the engine can be started using all registered ignition keys.*

- Install the new ignition switch and antenna.

Case 3: When the electric control unit (ECU) is faulty and has to be replaced.

- Prepare a new ECU [A] and, current registered ignition key(s) [B].

NOTE

○*The key registration unit is not required.*
○*After replacing the ECU, be sure to register the 2 ignition keys. If the 2 keys are not registered, the engine can not be started.*

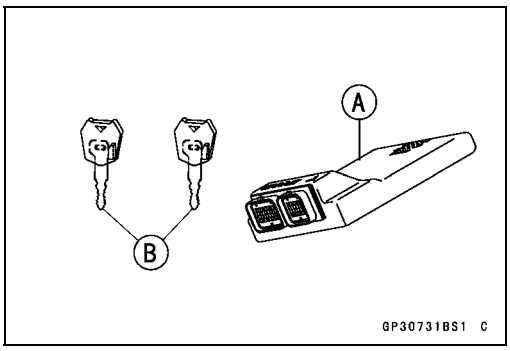

- Replace:
  ECU [A] (see Immobilizer System Parts Replacement)

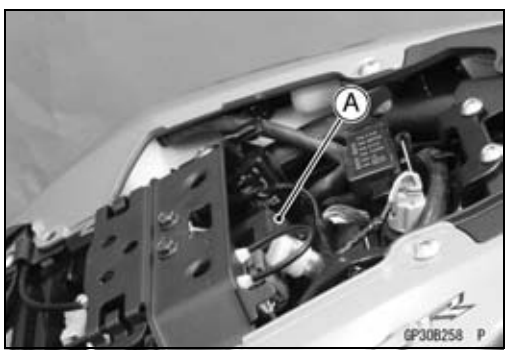

- Insert the current registered ignition key into the ignition switch and turn it to ON.

○If there is any problem in the registration, the warning indicator light (LED) [A] blinks to display the collation error.
Immobilizer Amplifier Failure

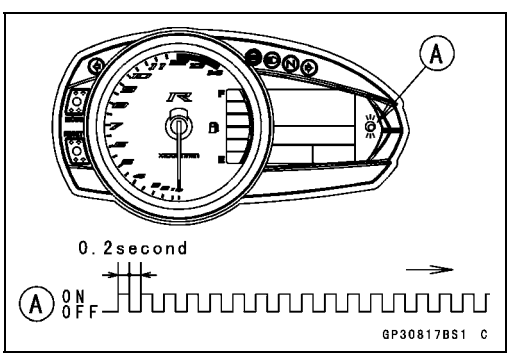

Immobilizer System

Registered Ignition Key Collation Error

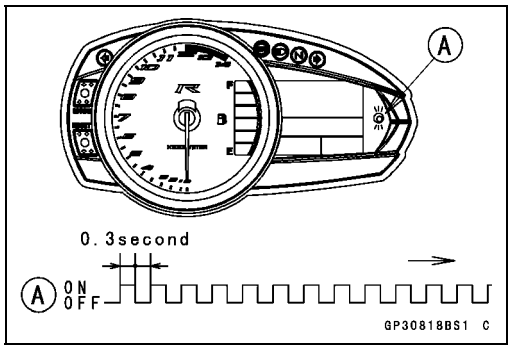

- The registered ignition key is registered in the ECU.

○The warning indicator light (LED) [A] blinks 1 time and stops for 1 second and the repeats this cycle to indicate successful registration of the registered ignition key.

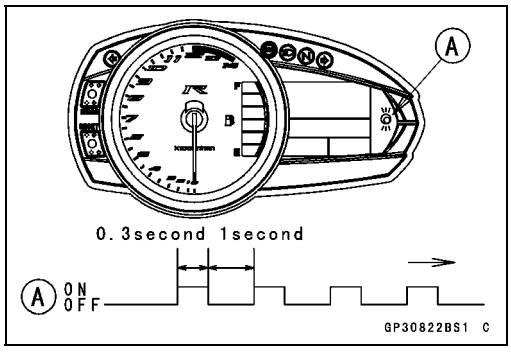

- Turn OFF the registered ignition key and remove it.

○The warning indicator light (LED) [A] blinks to display the registration mode.

NOTE

○*Insert next key and turn it to ON within 15 seconds after previous key is turned OFF and removed otherwise registration mode will be ended and the warning indicator light (LED) goes off.*

○*To return to the registration mode start the registered ignition key verification procedure. This applies to all ignition key registration.*

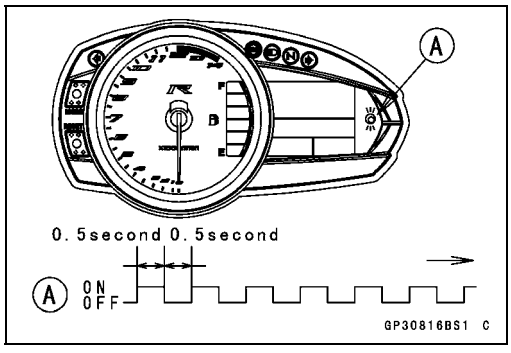

- Insert the other remaining registered ignition key to the ignition switch and turn it to ON.

NOTE

○*Keep the other ignition keys away from the immobilizer antenna.*

○If there is any problem in the registration, the warning indicator light (LED) [A] blinks to display the collation error.

Immobilizer Amplifier Failure

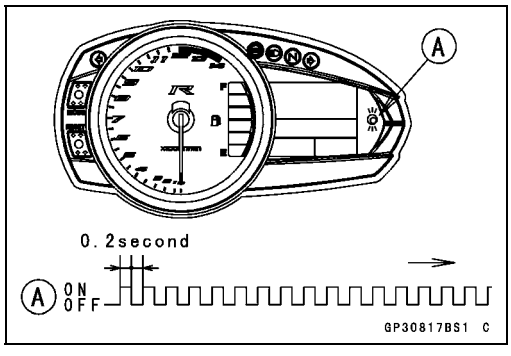

When Registered Ignition Key is Inserted.

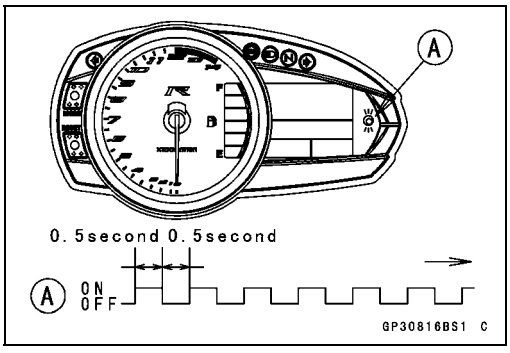

Ignition Key Collation Error

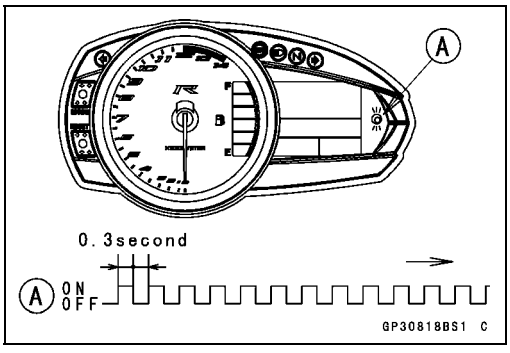

● The other remaining ignition key is registered in the ECU.
○The warning indicator light (LED) [A] blinks 2 times and stops for 1 second and then repeats this cycle to indicate successful registration of ignition key 1.

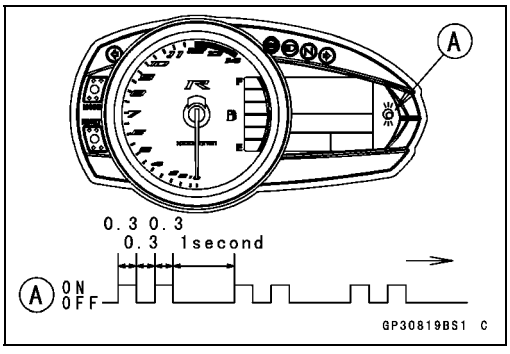

● Turn OFF and remove the other remaining ignition key.
○The warning indicator light (LED) [A] blinks to display the registration mode codes.

NOTE

○*Insert next key and turn it to ON within 15 seconds after previous key is turned OFF and removed otherwise registration mode will be ended and the warning indicator light (LED) goes off.*

○*To return to the registration mode start the registered ignition key verification procedure. This applies to all ignition key registration.*

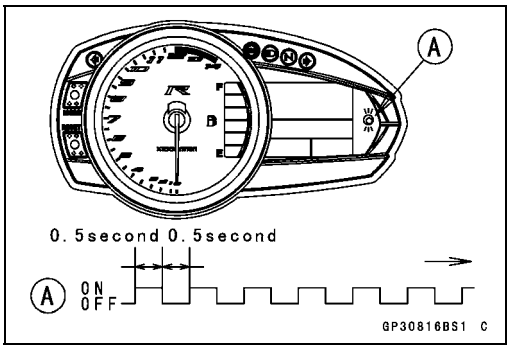

● Insert the ignition key 1 to the ignition switch and turn it to ON.

Immobilizer System

○If there is any problem in the registration, the warning indicator light (LED) [A] blinks to display the collation error code.

Immobilizer Amplifier Failure

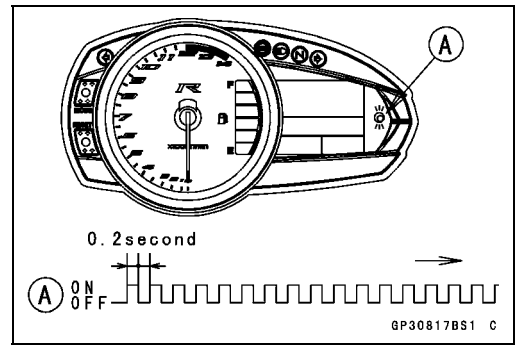

When Registered Ignition Key is Inserted.

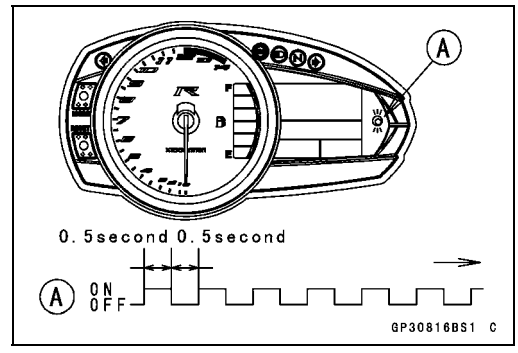

Ignition Key Collation Error

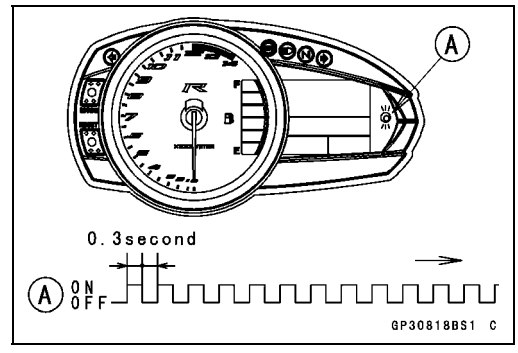

● The ignition key 1 is registered in the ECU.

○The warning indicator light (LED) [A] blinks 3 times and stops for 1 second and then repeats this cycle to indicate successful registration of ignition key 1.

● Turn OFF the ignition switch and wait for period more than 15 seconds.

● The registration mode automatically ends.

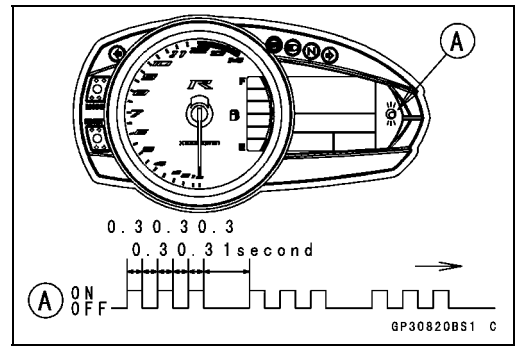

● Warning indicator light (LED) [A] goes off.

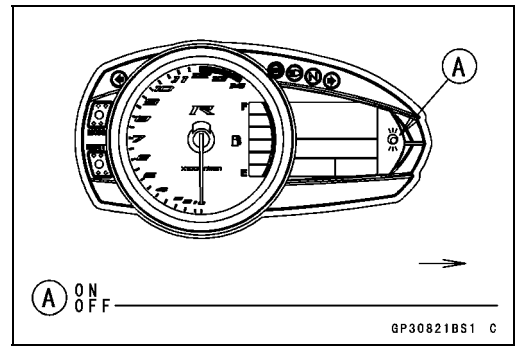

NOTE

○*Turn the ignition switch to ON with the registered ignition key.*
○*Check that the engine can be started using all registered ignition keys.*

Case 4: When all registered ignition keys are faulty or lost.

The all registered ignition keys replacement is considered very rare case. However if it is required, the following is necessary.

NOTE

○*The ECU must be replaced with a new one because the registered ignition key code that is registered in the current ECU can not be rewritten.*

● Prepare a new ECU [A] and 2 new ignition keys [B].

NOTE

○*The key registration unit is not required.*
○*After replacing the ECU, be sure to register the 2 ignition keys. If the 2 keys are not registered, the engine can not be started.*

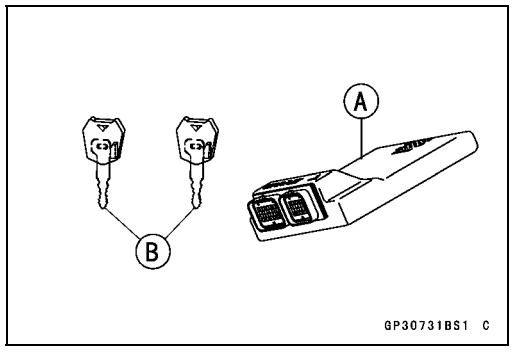

● Insert the first ignition key into the ignition switch and turn it to ON.

○If there is any problem in the registration, the warning indicator light (LED) [A] blinks to display the collation error.
Immobilizer Amplifier Failure

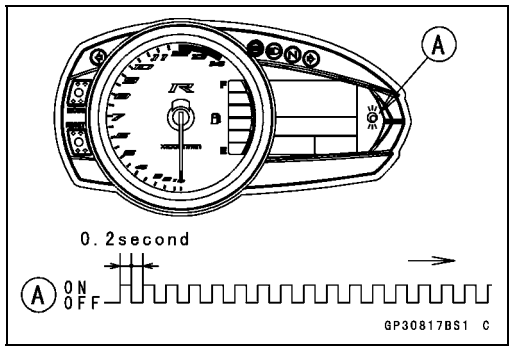

Ignition Key Collation Error

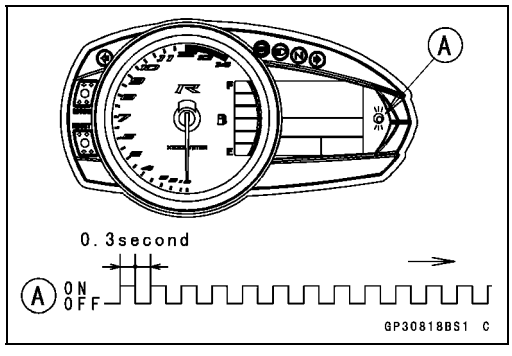

Immobilizer System

- The first ignition key is registered in the ECU.

○The warning indicator light (LED) [A] blinks 1 time and stops for 1 second and the repeats this cycle to indicate successful registration of the ignition key 1.

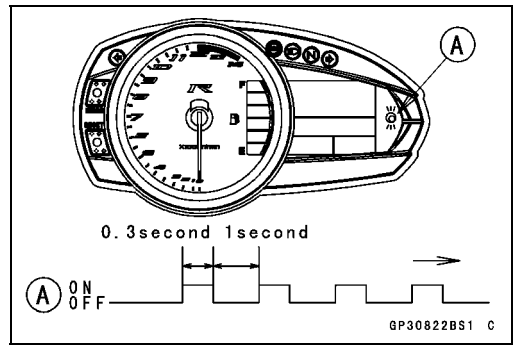

- Turn OFF the first ignition key and remove it.
- The warning indicator light (LED) [A] blinks to display the registration mode.

NOTE

○*Insert next key and turn it to ON within 15 seconds after previous key is turned OFF and removed otherwise registration mode will be ended and the warning indicator light (LED) goes off.*

○*To return to the registration mode start the registered ignition key verification procedure. This applies to all ignition key registration.*

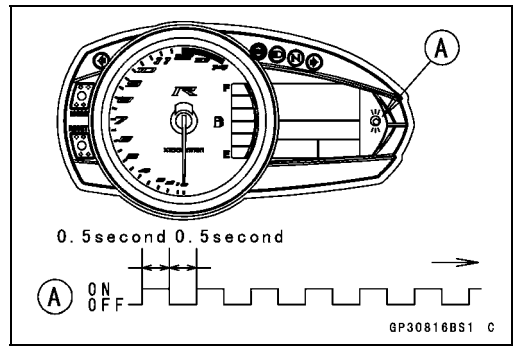

- Insert the second ignition key to the ignition switch and turn it to ON.

NOTE

○*Keep the other ignition keys away from the immobilizer antenna.*

○If there is any problem in the registration, the warning indicator light (LED) [A] blinks to display the collation error.

Immobilizer Amplifier Failure

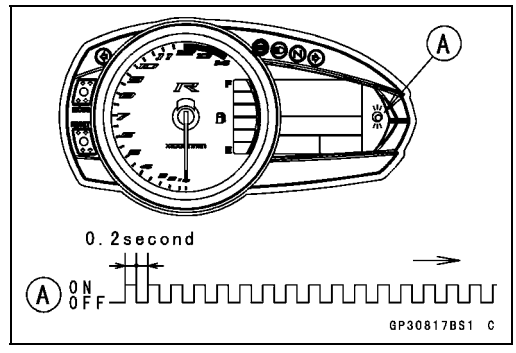

When Registered Ignition Key is Inserted

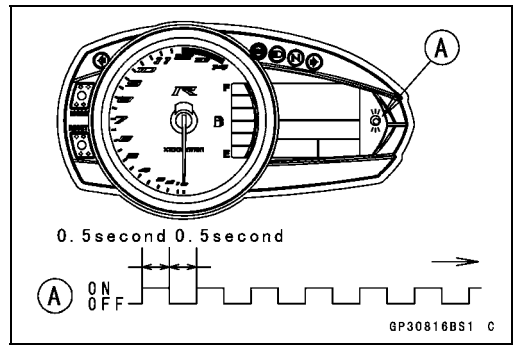

Ignition Key Collation Error

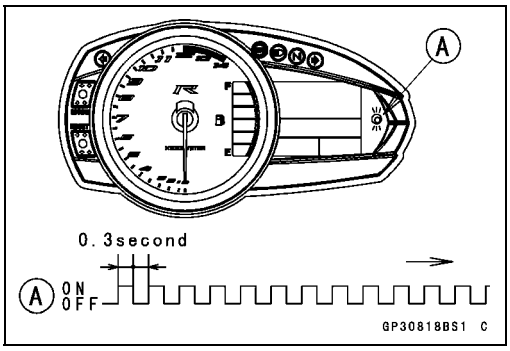

- The second ignition key is registered in the ECU.

○The warning indicator light (LED) [A] blinks 2 times and stops for 1 second and then repeats this cycle to indicate successful registration of second ignition key.

- Turn OFF the ignition switch and wait for period more than 15 seconds.
- The registration mode automatically ends.

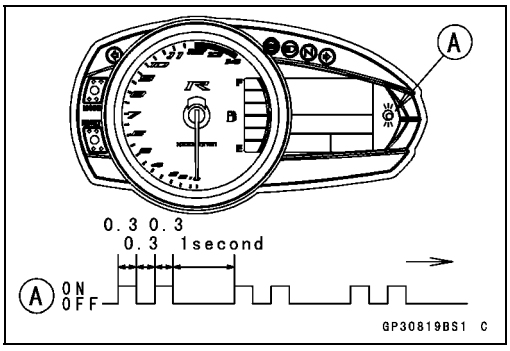

- Warning indicator light (LED) [A] goes off.

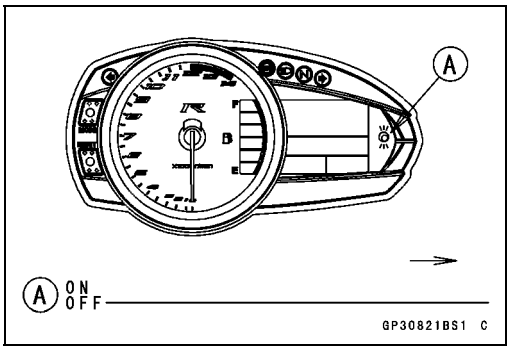

NOTE

○*Turn the ignition switch to ON with the registered ignition key.*

○*Check that the engine can be started using all registered ignition keys.*

Case 5: When replacing the antenna.

- Prepare a new antenna.
- Refer to the Immobilizer System Parts Replacement.

NOTE

○*No key registration is required.*

Immobilizer System

All Keys Initial Registration Flow Chart

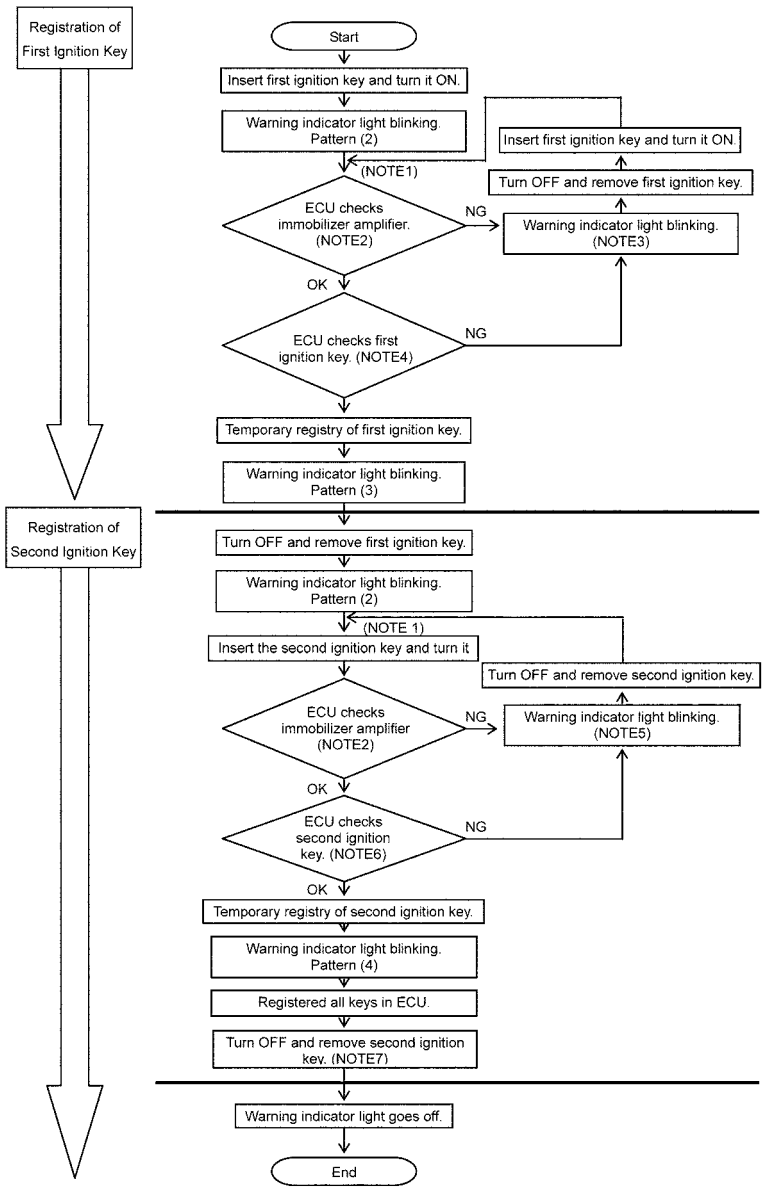

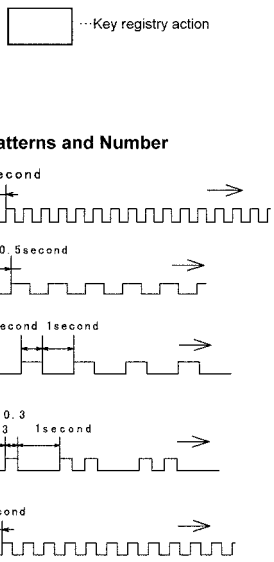

NOTE

1. Key Substitute Time
   Insert next key and turn ON within 15 seconds after previous key is turned OFF.
2. ECU confirms the following.
   - ○ Power Supply of Amplifier
   - ○ Connection of Amplifier
   - ○ Time of Transmitting and Receiving Messages.
3. ECU confirms the following.
   - ○ Immobilizer Amplifier Failure Pattern (1)
   - ○ Ignition Key Collation Error Pattern (5)
4. ECU confirms the following.
   - ○ Ignition Key or Not
   - ○ Match the Unique Code
5. ECU confirms the following.
   - ○ Immobilizer Amplifier Failure Pattern (1)
   - ○ Second Ignition Key Collation Error Pattern (5)
   - ○ Registered Ignition Key is Inserted Pattern (2)
6. ECU confirms the following.
   - ○ Ignition Key or Not.
   - ○ Match the Unique Code
   - ○ Not Registered Ignition Key
7. When the ECU-registered key is turned "OFF", ECU keeps the power "ON" for two seconds.
   And then, in two seconds after the key is "OFF", ECU turns the power "OFF".

GP30999B F

Immobilizer System Parts Replacement

Immobilizer Antenna Replacement

- Remove:
  Fuel Tank (see Fuel Tank Removal in the Fuel System (DFI) chapter)
- Disconnect the lead connectors [A].

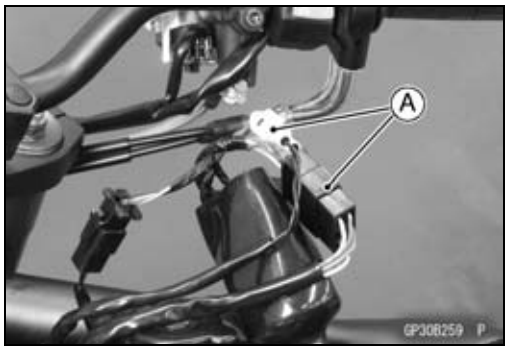

- Remove:
  Handlebar (see Handlebar Removal in the Steering chapter)
  Steering Stem Head (see Stem, Stem Bearing Removal in the Steering chapter)
- Using a small chisel [A] or punch, turn out the Torx bolts.

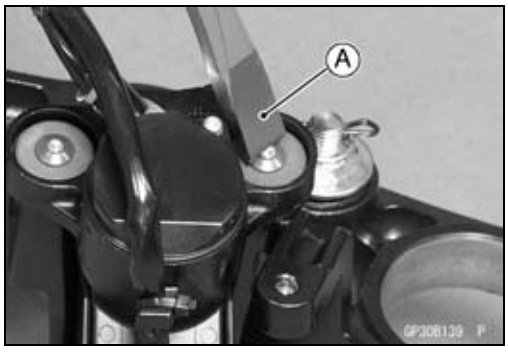

- Cut the band [A].
- Remove the screws [B].
- Remove the antenna [C] with the rubber cover [D] and cover [E].

○Pull the lower parts [F] of the cover outside to clear the projections [G] of the ignition switch.

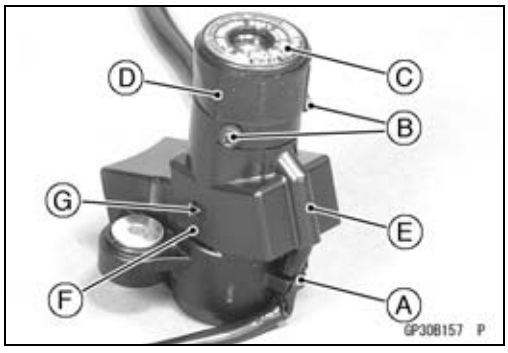

- Tighten a new Torx bolt [A] until the bolt head [B] is broken [C].
- Run the leads correctly (see Cable, Wire, and Hose Routing section in the Appendix chapter).

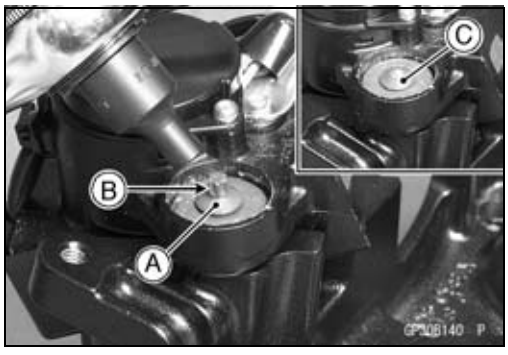

Immobilizer Amplifier Replacement

- Remove:
  Upper Fairing (see Upper Fairing Removal in the Frame chapter)
  Inner Cover (see Inner Cover Removal in the Frame chapter)
  Clamp [A]
  Bolts [B]
  Bracket [C]

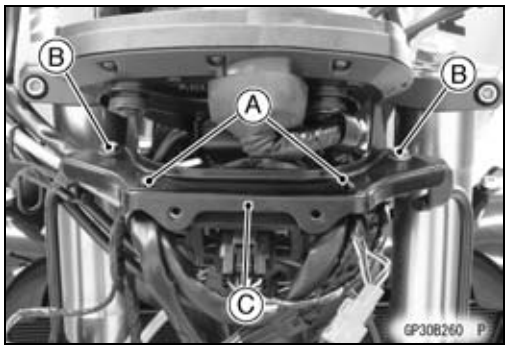

Immobilizer System

- Remove:
  Connector [A] (Disconnect)
  Immobilizer Amplifier [B]
- Installation is the reverse of removal.

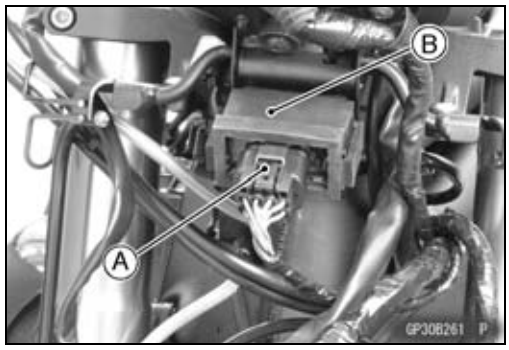

ECU (Electronic Control Unit) Replacement

NOTICE

Never drop the ECU, especially on a hard surface. Such a shock to the ECU can damage it.

NOTE

○*Replace the ECU according to the following procedure for the models with guards.*
○*Refer to the ECU section in the Fuel System (DFI) chapter for the models without guards.*

- Remove:
  Rear Seat (see Rear Seat Removal in the Frame chapter)
  Left Seat Cover (see Seat Cover Removal in the Frame chapter)
  Bolts [A] and Rear Seat Bracket [B]

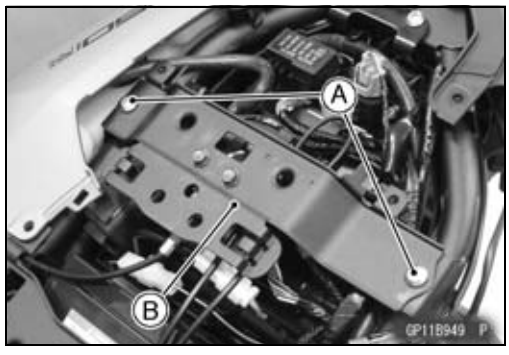

- Remove:
  Relay Box [A]
  Pads [B]

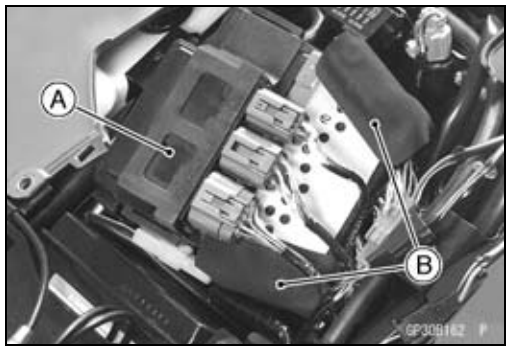

- Using a small chisel [A] or other suitable tool, remove the screws.

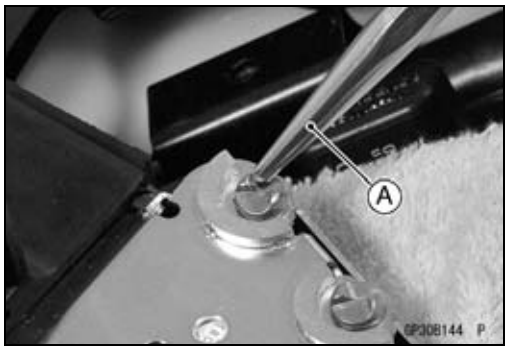

- Remove the upper guard [A] and lower guard [B].

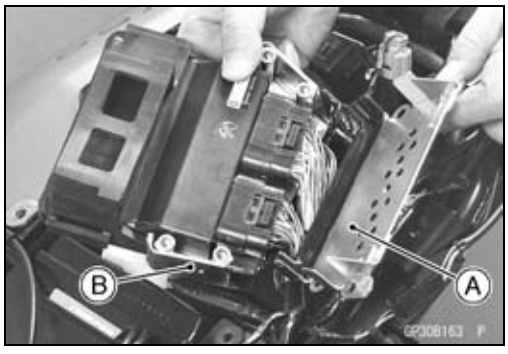

- Disconnect the connectors [A].
- Remove the ECU [B].

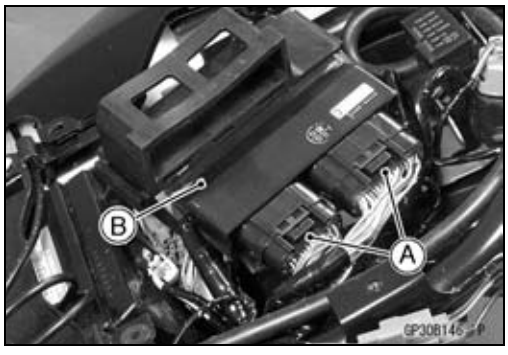

- Connect the connectors to the ECU.
- Install the lower and upper [A] guard to the ECU.

NOTICE
Do not pinch the leads.

- Tighten the new screws [B] using the Kawasaki genuine screws of which threads are coated with locking agent.

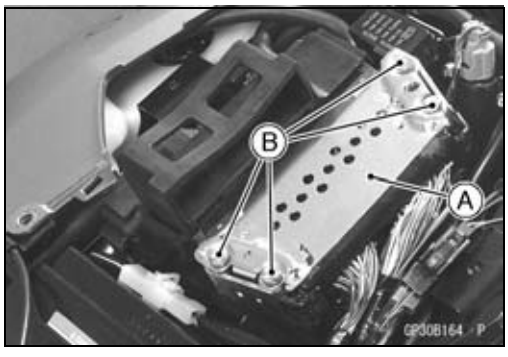

- Install the pads [A] over the guard as shown in the figure.

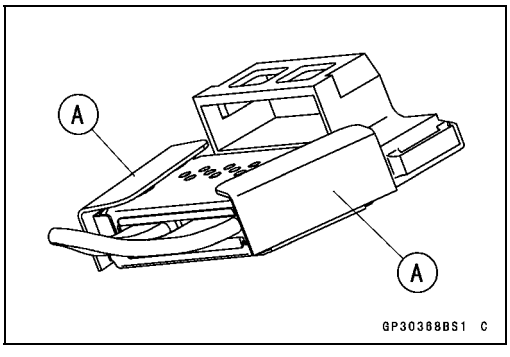

Immobilizer System

Registered Immobilizer Relational Parts Replacement Chart

		Failed or Lost Part				
		Ignition Keys	Ignition Switch	Antenna	Ampli-fier	ECU
*	Ignition Key	●	○			
	Ignition Switch		●			
	Antenna			●		
	Ampli-fier				●	
	ECU	○				●

*	Replacement Part
●	Main Replacement Part
○	Additional Replacement Part

Immobilizer System Inspection

- Refer to the Immobilizer Amplifier and Blank Key Detection section in the Fuel System (DFI) chapter.

Immobilizer System

Immobilizer System Circuit

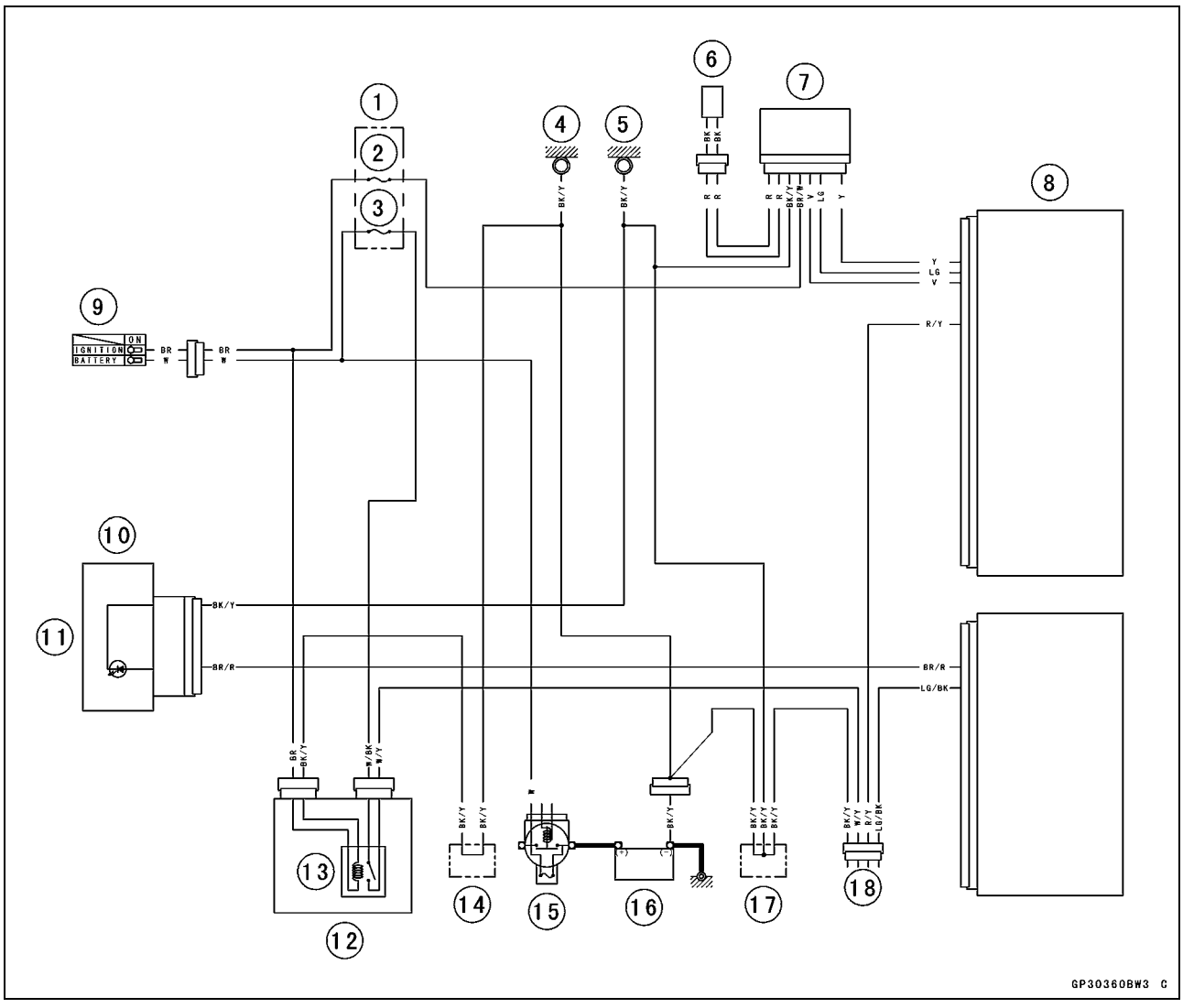

1. Fuse Box 2
2. Ignition Fuse 10 A
3. ECU Fuse 10 A
4. Frame Ground
5. Meter Ground
6. Immobilizer Antenna
7. Immobilizer Amplifier
8. ECU
9. Ignition Switch
10. Meter Unit
11. Oil Pressure/FI/Immobilizer Warning Indicator Light (LED)
12. Relay Box
13. ECU Main Relay
14. Water-proof Joint B
15. Main Fuse 30 A
16. Battery 12 V 8 Ah
17. Water-proof Joint C
18. Kawasaki Diagnostic System Connector

Switches and Sensors

Brake Light Timing Inspection

- Refer to the Brake Light Switch Operation Inspection in the Periodic Maintenance chapter.

Brake Light Timing Adjustment

- Refer to the Brake Light Switch Operation Inspection in the Periodic Maintenance chapter.

Switch Inspection

- Using a hand tester, check to see that only the connections shown in the table have continuity (about zero ohms).

○For the switch housings and the ignition switch, refer to the tables in the Wiring Diagram.

★If the switch has an open or short, repair it or replace it with a new one.

Special Tool - Hand Tester: 57001-1394

Rear Brake Light Switch Connections

Rear Brake Light Switch Connections		
Color	BR	BL
When brake pedal is pushed down	○	○
When brake pedal is released		

Sidestand Switch Connections

Sidestand Switch Connections		
Color	BK	G
When sidestand is down		
When sidestand is up	○	○

Neutral Switch Connections

Neutral Switch Connections		
Color	SW. Terminal	Ground
When transmission is in neutral	○	○
When transmission is not in neutral		

Oil Pressure Switch Connections*

Oil Pressure Switch Connections *		
Color	SW. Terminal	Ground
When engine is stopped	○	○
When engine is running		

*: Engine lubrication system is in good condition.

Water Temperature Sensor Inspection

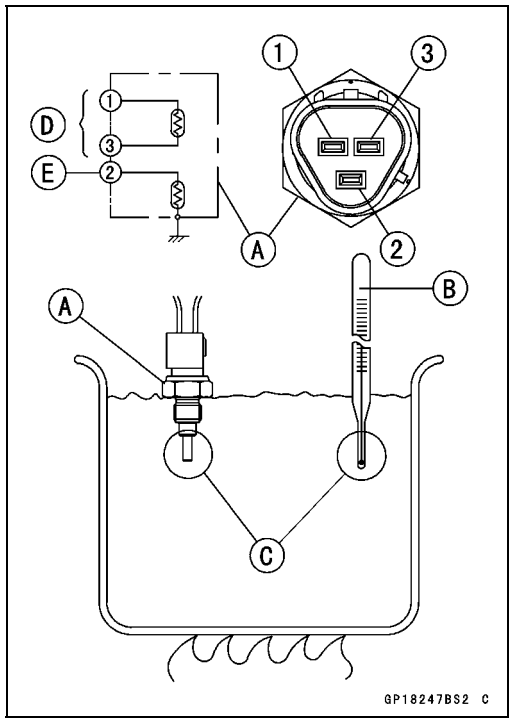

- Remove the water temperature sensor (see Water Temperature Sensor Removal/Installation in the Fuel System (DFI) chapter).
- Suspend the sensor [A] in a container of coolant so that the threaded portion is submerged.
- Suspend an accurate thermometer [B] with temperature sensing portions [C] located in almost the same depth.

NOTE

○*The sensor and thermometer must not touch the container side or bottom.*

- Place the container over a source of heat and gradually raise the temperature of the coolant while stirring the coolant gently.
- Using the hand tester, measure the internal resistance of the sensor.

○The sensor sends electric signals to the ECU and coolant temperature gauge in the meter unit.
○Measure the resistance across the terminals and the body (for the gauge) at the temperatures shown in the table.
★If the hand tester does not show the specified values, replace the sensor.

Water Temperature Sensor

Resistance for ECU [D]	
Temperature	Resistance (kΩ) (Terminal [1]-[3])
20°C (68°F)	2.46 $^{+0.155}_{-0.143}$
80°C (176°F)	0.32 ±0.011
110°C (230°F)	0.1426 ±0.0041

Resistance for Water Temperature Gauge [E]	
Temperature	Resistance (Ω) (Terminal [2]-Body)
50°C (122°F)	210 ±40
120°C (248°F)	21.2 ±1.5

Speed Sensor Removal

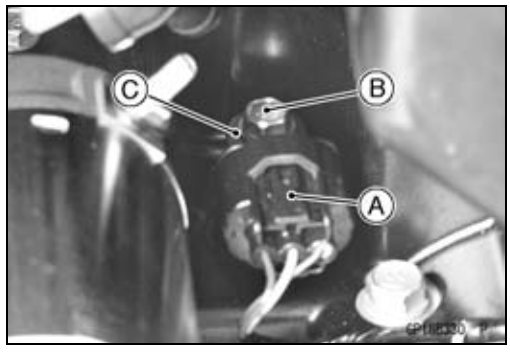

NOTICE

Never drop the sensor especially on a hard surface. Such a shock to the sensor can damage it.

- Remove:
  Water Pipe (see Alternator Cover Removal)
  Water Hose (see Starter Motor Removal)
  Connector [A]
  Speed Sensor Bolt [B]
  Speed Sensor [C]

Switches and Sensors

Speed Sensor Installation

- Apply grease to the O-ring [A] on the speed sensor [B].
- Tighten:

  Torque - Speed Sensor Bolt: 12 N·m (1.2 kgf·m, 106 in·lb)
- Install the removed parts (see appropriate chapters).

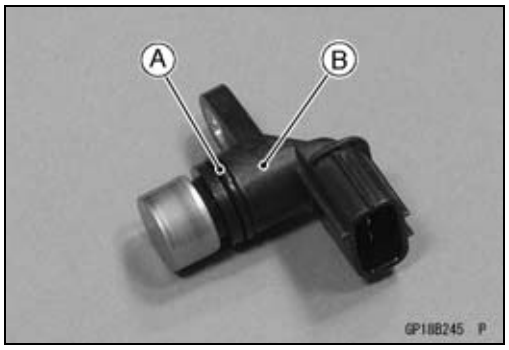

Speed Sensor Inspection

- Refer to the Speed Sensor section in the Fuel System (DFI) chapter (see Speed Sensor section in the Fuel System (DFI) chapter).

Oxygen Sensor Removal

NOTICE
Never drop the sensor especially on a hard surface. Such a shock to the sensor can damage it.

NOTICE
Do not pull strongly, twist, or bend the oxygen sensor lead. This may cause the wiring open.

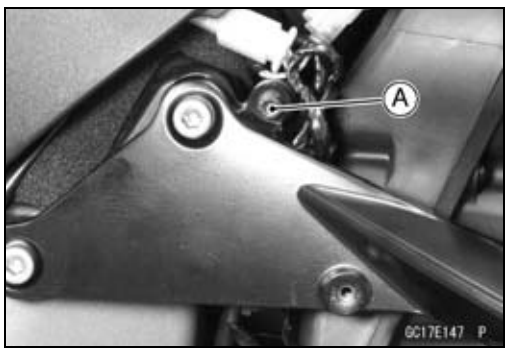

- Remove:
  Right Frame Cover (see Frame Cover Removal in the Frame chapter)
  Bolt [A] and Connector Bracket
- Disconnect the oxygen sensor lead connector [A].

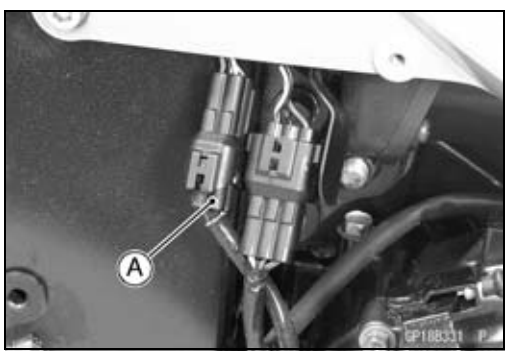

- Free the lead from the clamp [A].
- Remove the oxygen sensor [B].

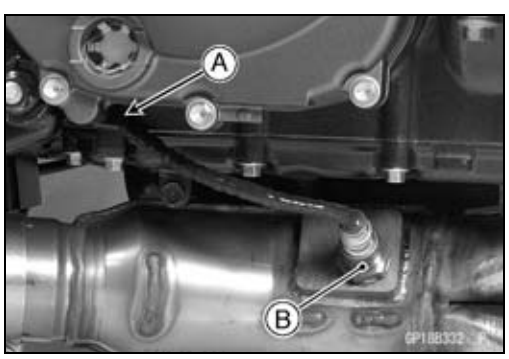

Oxygen Sensor Installation

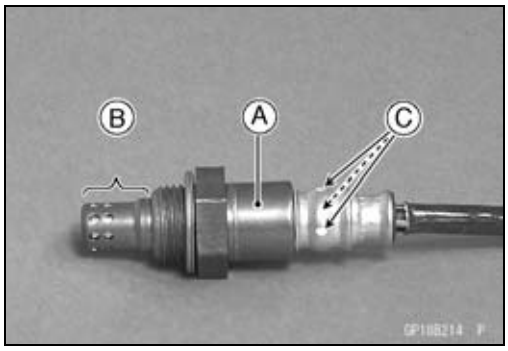

NOTICE

Never drop the oxygen sensor [A] especially on a hard surface. Such a shock to the unit can damage it. Do not touch the sensing part [B] and filter holes [C] of the sensor to prevent oil contact. Oil contamination from hands can reduce sensor performance.

- Tighten:

  Torque - Oxygen Sensor: 44.1 N·m (4.50 kgf·m, 32.5 ft·lb)
- Run the oxygen sensor lead correctly (see Cable, Wire, and Hose Routing section in the Appendix chapter).

Oxygen Sensor Inspection

- Refer to the Oxygen Sensor Inspection in the Fuel System (DFI) chapter.

Fuel Level Sensor Inspection

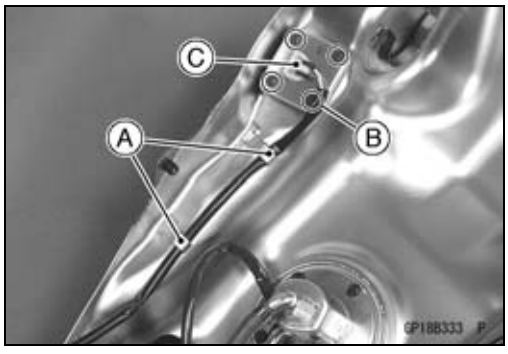

- Remove:
  Fuel Tank (see Fuel Tank Removal in the Fuel System (DFI) chapter)
  Clamps [A] (Open)
  Bolts [B]
  Fuel Level Sensor [C]

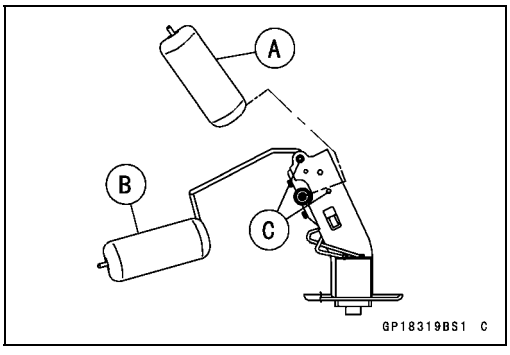

- Check that the float moves up and down smoothly without binding. It should go down under its own weight.

★If the float does not move smoothly, replace the sensor.
  Float in Full Position [A]
  Float in Empty Position [B]
  Float Arm Stoppers [C]

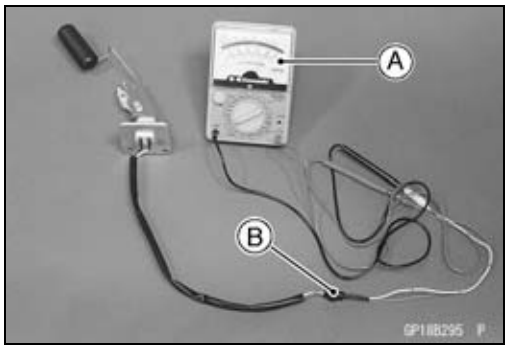

- Using the hand tester [A], measure the resistance across the terminals in the fuel level sensor lead connector [B].

  Special Tool - Hand Tester: 57001-1394

★If the tester readings are not as specified, or do not change smoothly according as the float moves up and down, replace the sensor.

Fuel Level Sensor Resistance

Standard:	**Full position:**	**9 ~ 13 Ω**
	Empty position:	**90 ~ 100 Ω**

Switches and Sensors

- Install a new gasket [A] on the fuel level sensor as shown in the figure.
  Hollows [B]
  Front [C]
- Apply a non-permanent locking agent to the threads of the fuel level sensor bolts and tighten them.

  Torque - Fuel Level Sensor Bolts: 6.9 N·m (0.70 kgf·m, 61 in·lb)

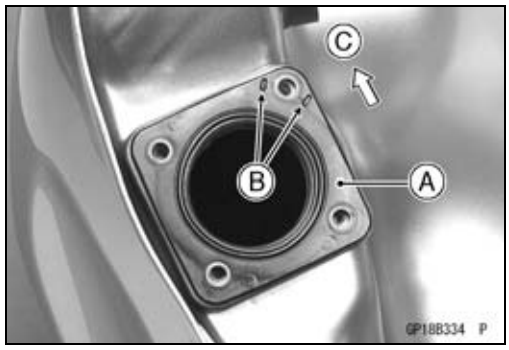

Relay Box

The relay box [A] has relays and diodes. The relays and diodes can not be removed.

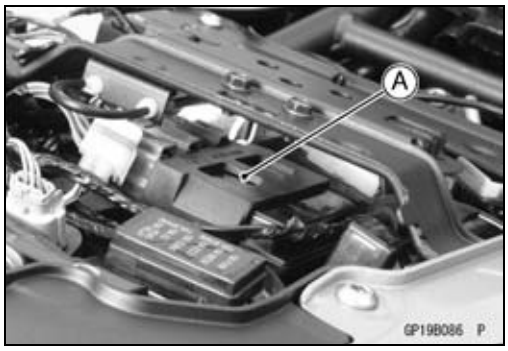

Relay Box Removal

NOTICE

Never drop the relay box especially on a hard surface.
Such a shock to the relay box can damage it.

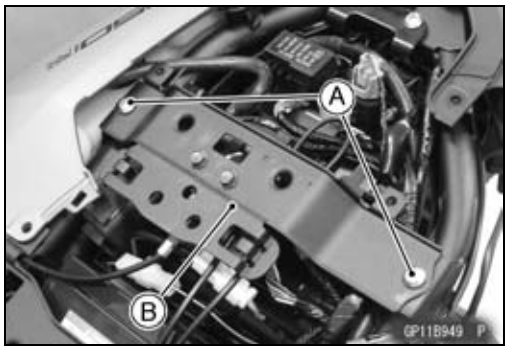

- Remove:
  Left Seat Cover (see Seat Cover Removal in the Frame chapter)
  Rear Seat Bracket Bolts [A]
  Rear Seat Bracket [B]

- Remove:
  Connectors [A] (Disconnect)
  Relay Box [B]

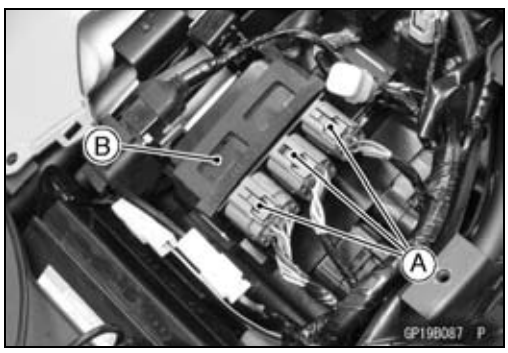

Relay Circuit Inspection

- Remove the relay box (see Relay Box Removal).
- Check conductivity of the following numbered terminals by connecting the hand tester and one 12 V battery to the relay box as shown (see Relay Box Internal Circuit in this section).

★If the tester does not read as specified, replace the relay box.

Relay Circuit Inspection (with the battery disconnected)

	Tester Connection	Tester Reading (Ω)
Headlight Relay	1-3	∞
ECU Main Relay	7-6	∞
	4-5	Not ∞*
Fuel Pump Relay	7-8	∞
	9-10	Not ∞*
Starter Circuit Relay	11-16	∞
	11-12	∞
Fan Relay	17-20	∞
	18-19	Not ∞*

*: The actual reading varies with the hand tester used.

Relay Box

Relay Circuit Inspection (with the battery connected)

	Battery Connection (+) (–)	Tester Connection	Tester Reading (Ω)
ECU Main Relay	2-11	1-3	0
	4-5	7-6	0
Fuel Pump Relay	9-10	7-8	0
Fan Relay	18-19	17-20	0

	Battery Connection (+) (–)	Tester Connection DC 25 V Range (+) (–)	Tester Reading (V)
Starter Circuit Relay	16-12	11-12	Battery Voltage

(+): Apply positive lead.
(–): Apply negative lead.

Diode Circuit Inspection

- Remove the relay box (see Relay Box Removal).
- Check conductivity of the following pairs of terminals (see Relay Box Internal Circuit in this section).

Diode Circuit Inspection

Tester Connection	1-11, 2-11, 12-13, 12-15, 12-16, 13-14, 13-15

★The resistance should be low in one direction and more than ten times as much in the other direction. If any diode shows low or high in both directions, the diode is defective and the relay box must be replaced.

NOTE

○*The actual meter reading varies with the meter or tester used and the individual diodes, but generally speaking, the lower reading should be from zero to one half the scale.*

Relay Box

Relay Box Internal Circuit

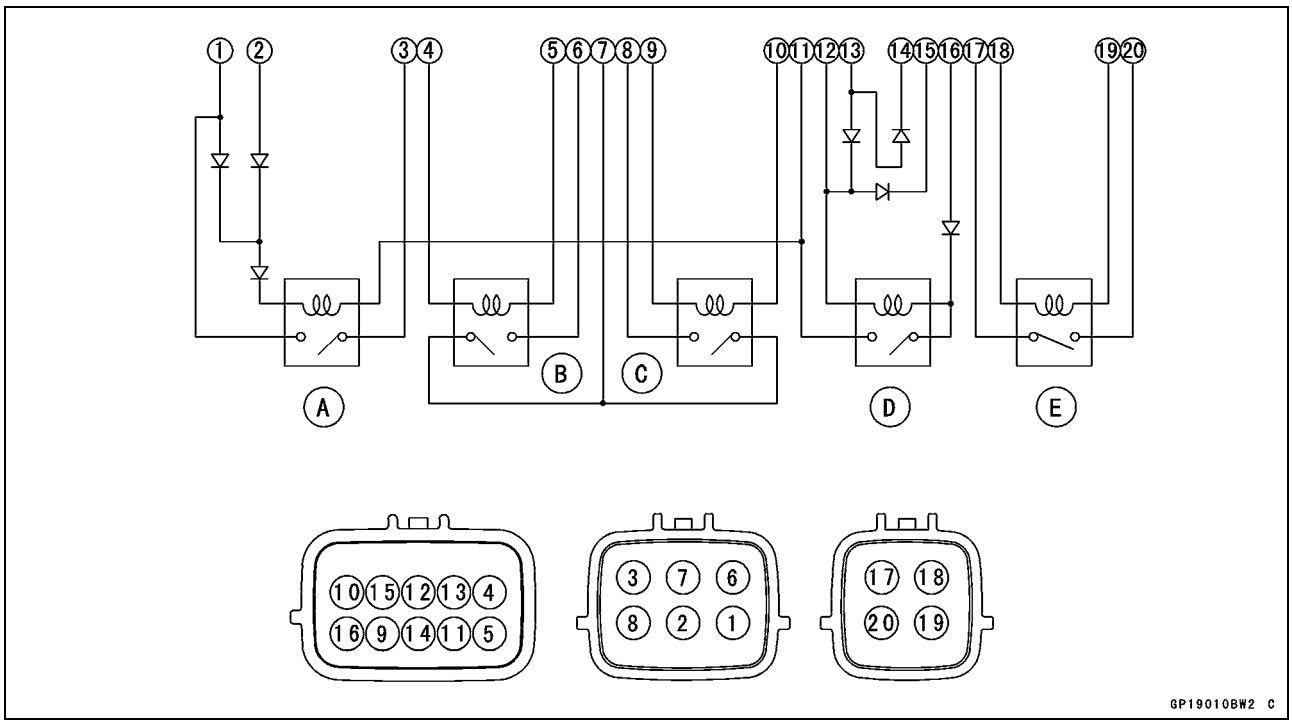

A: Headlight Relay
B: ECU Main Relay
C: Fuel Pump Relay
D: Starter Circuit Relay
E: Fan Relay

Fuse

30 A Main Fuse Removal

- Remove:
  Rear Seat Bracket (see Relay Box Removal)
  30 A Main Fuse Connector [A] (Disconnect)

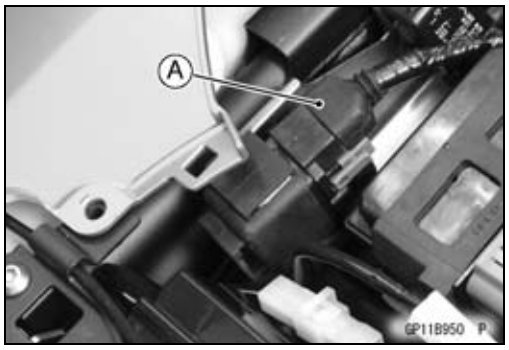

- Pull out the main fuse [A] from the starter relay with a needle nose pliers.

Fuse Box Fuse Removal

- Remove the seats (see Rear/Front Seat Removal in the Frame chapter).
- Unlock the hook [A] to lift up the lid [B].
  Fuse Box 1 [C] (Front Side)

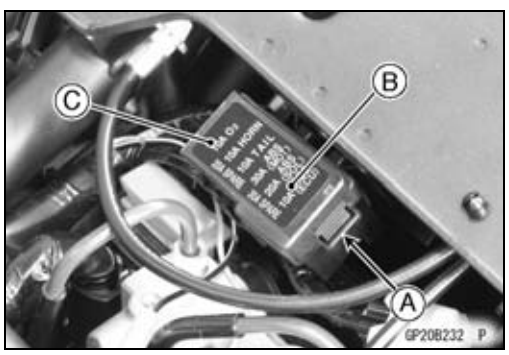

- Unlock the hook [A] to lift up the lid [B].
  Fuse Box 2 [C] (Rear Side)

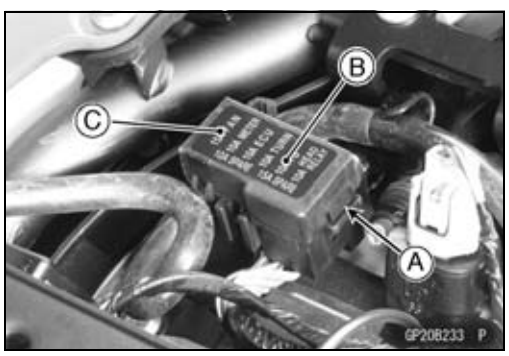

- Pull the fuses [A] straight out of the fuse box with needle nose pliers.

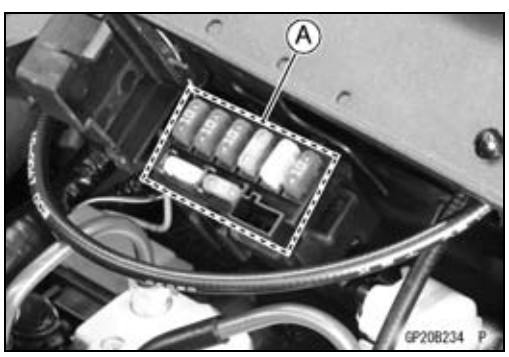

Fuse

10 A ECU Fuse Removal

- Remove the rear seat (see Rear Seat Removal in the Frame chapter)
- Unlock the hook to lift up the lid [A].
- Pull out the ECU fuse [B] from the fuse box 2.

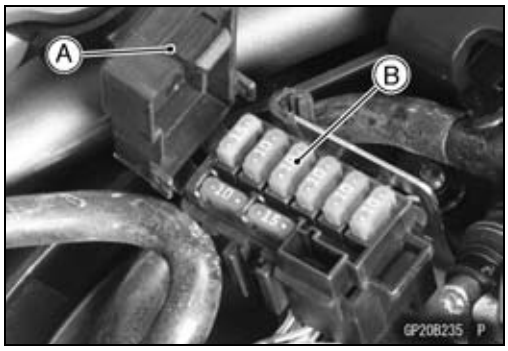

Fuse Installation

- If a fuse fails during operation, inspect the electrical system to determine the cause, and then replace it with a new fuse of proper amperage.
- Install the fuse box fuses on the original position as specified on the lid.

Fuse Inspection

- Remove the fuse (see 30 A Main/Fuse Box/10 A ECU Fuse Removal).
- Inspect the fuse element.

★If it is blown out, replace the fuse. Before replacing a blown fuse, always check the amperage in the affected circuit. If the amperage is equal to or greater than the fuse rating, check the wiring and related components for a short circuit.

Housing [A]
Fuse Element [B]
Terminals [C]
Blown Element [D]

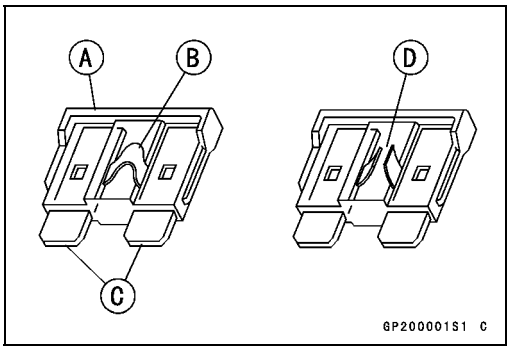

NOTICE

When replacing a fuse, be sure the new fuse matches the specified fuse rating for that circuit. Installation of a fuse with a higher rating may cause damage to wiring and components.

Appendix

Table of Contents

Cable, Wire, and Hose Routing 17-2
Troubleshooting Guide 17-52

Cable, Wire, and Hose Routing

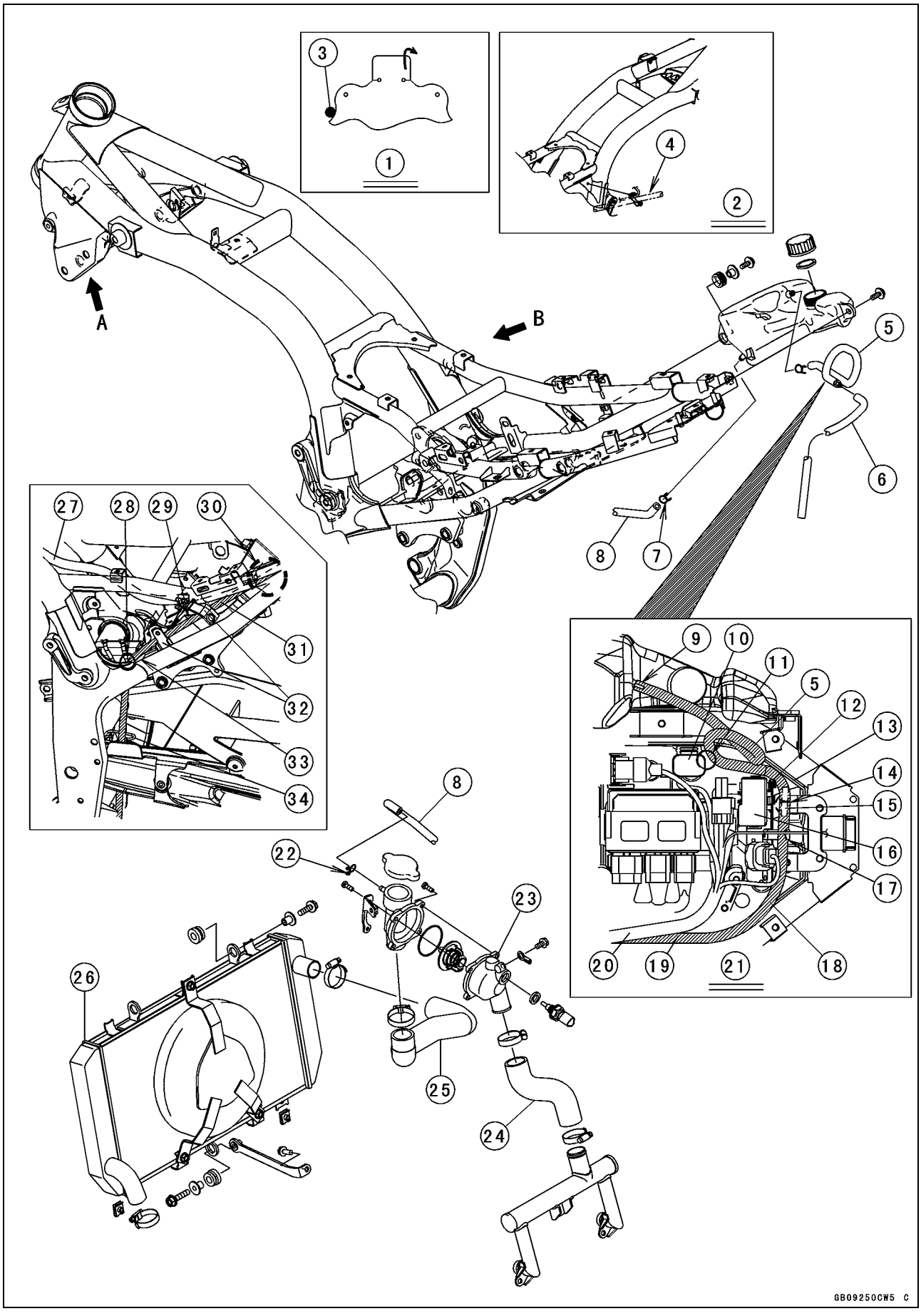

Cable, Wire, and Hose Routing

1. Viewed A
2. Viewed B
3. After installing the heat insulation rubber plate, run the radiator fan motor lead under the rivet of the left side.
4. Run the reserve tank hose and main harness into the clamp.
5. Reserve Tank Overflow Hose (From Reserve Tank to Fitting)
6. Reserve Tank Overflow Hose (From Fitting)
7. Install the clamp so that knob of the clamp faces outside of the frame as shown in the figure.
8. Reserve Tank Hose
9. Install the reserve tank overflow hose (from reserve tank to fitting) so that white paint of the hose faces the upward.
10. Turn Signal Relay
11. Run the reserve tank overflow hose (from reserve tank to fitting) so as not to touch the turn signal relay as shown in the figure.
12. Trim (Install the trim to the fuse box bracket.)
13. Battery Case
14. Reserve Tank Overflow Hose (From Fitting) (After installing the reserve tank overflow hose (from reserve tank to fitting), and insert the reserve tank overflow hose (from fitting) between the battery case and trim.)
15. Install the fitting at this position as shown in the figure.
16. Fuse Box 2
17. Hold the reserve tank overflow hose (from fitting) as shown in the figure.
18. Do not slacken the reserve tank overflow hose (from fitting).
19. Reserve Tank Overflow Hose (From Fitting)
20. Main Harness
21. Viewed Upper Side
22. Install the clamp so that knob of the clamp faces left side of the frame as shown in the figure.
23. Thermostat Housing
24. Water Hose
25. Radiator Hose
26. Radiator
27. Main Harness
28. Run the reserve tank overflow hose (from fitting) outside the exhaust butterfly valve cable.
29. Run the reserve tank overflow hose (from fitting) outside the rear fender.
30. Run the reserve tank overflow hose (from fitting) under the main harness as shown in the figure.
31. Reserve Tank Overflow Hose (From Fitting)
32. Run the reserve tank overflow hose (from fitting) behind the frame bracket.
33. Run the reserve tank overflow hose (from fitting) to the front of the frame cross pipe as shown in the figure.
34. Clamp (Run the reserve tank overflow hose (from fitting) into the clamp.)

Cable, Wire, and Hose Routing

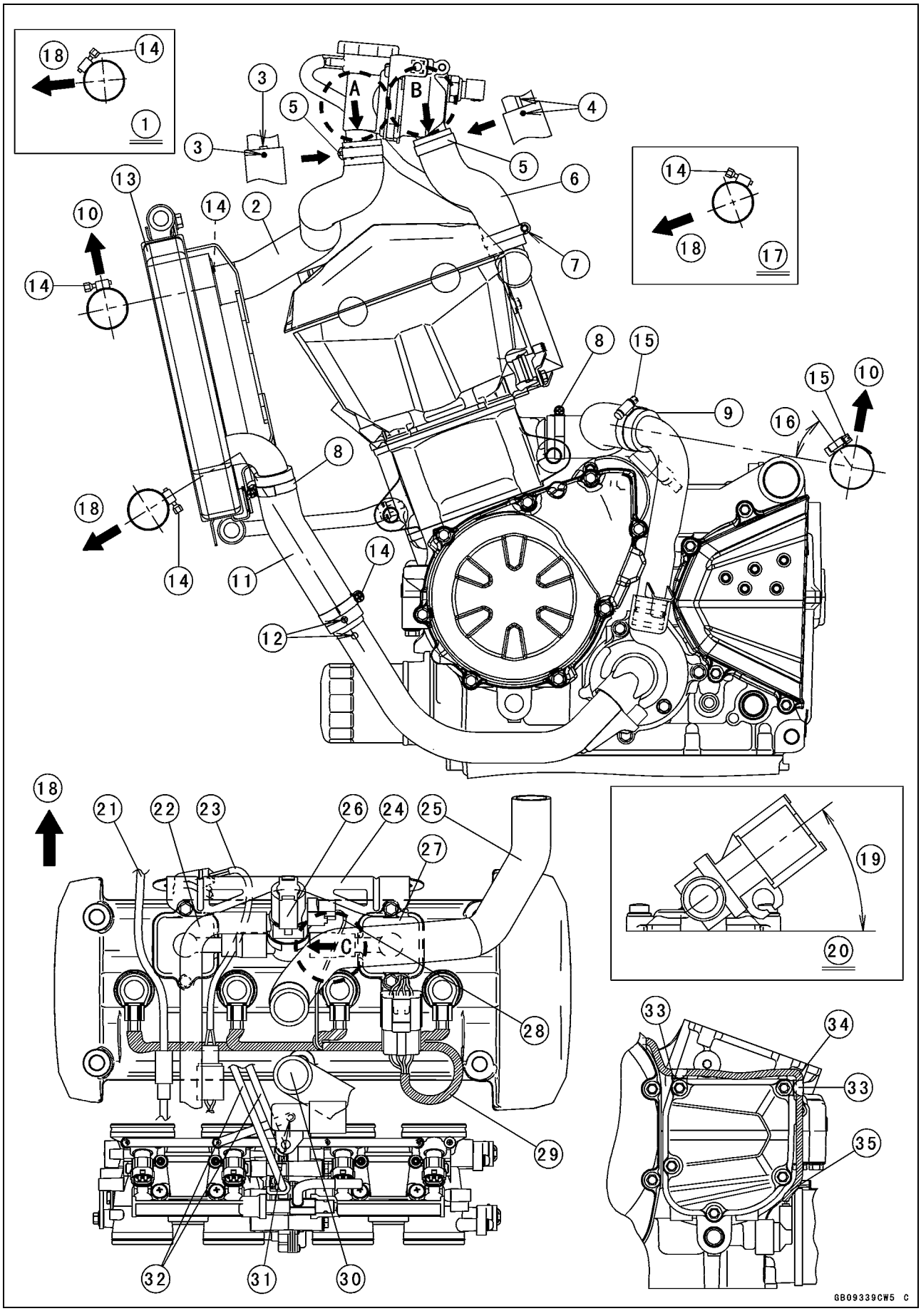

Cable, Wire, and Hose Routing

1. Viewed A
2. Radiator Hose (From Thermostat Housing to Radiator)
3. Align the white paint of the radiator hose (from thermostat housing to radiator) with projection of the thermostat housing.
4. Align the white paint of the water hose (from cylinder head to thermostat housing) with rib of the thermostat housing.
5. Clamp
6. Water Hose (From Cylinder Head to Thermostat Housing)
7. Clamp (Install the clamp so that the bolt head faces right side as shown in the figure.)
8. Clamps
9. Water Hose (From Water Pump to Cylinder)
10. Upper Side
11. Radiator Hose (From Radiator to Water Pump)
12. Align the white paint of the radiator hose (from radiator to water pump) with projection of the water pipe.
13. Radiator
14. Install the clamp as shown in the figure.
15. Install the clamp within the angle as shown in the figure.
16. 30 ~ 45°
17. Viewed B
18. Front
19. 30 ~ 40°
20. Viewed C
21. Radiator Fan Motor Lead
22. Air Switching Valve Hose (From Air Switching Valve to Air Cleaner Housing)
23. Camshaft Position Sensor Lead (Run the camshaft position sensor lead under the bracket.)
24. Bracket (Install the heat insulation rubber plate from the front side with the rivets.)
25. Radiator Hose (From Thermostat Housing to Radiator)
26. Air Switching Valve
27. Right Air Suction Valve Cover
28. Run the air switching valve lead over the air switching valve hose (from air switching valve to right air suction valve cover).
29. Stick Coil Harness
30. Water Hose (From Cylinder Head to Thermostat Housing)
31. Vacuum Hose (Run the vacuum hose under the throttle cables.)
32. Throttle Cables
33. Clamps
34. Oil Pressure Switch/Crankshaft Sensor Lead
35. Install the rubber boot and confirm the tube is contact to the rubber boot.

Cable, Wire, and Hose Routing

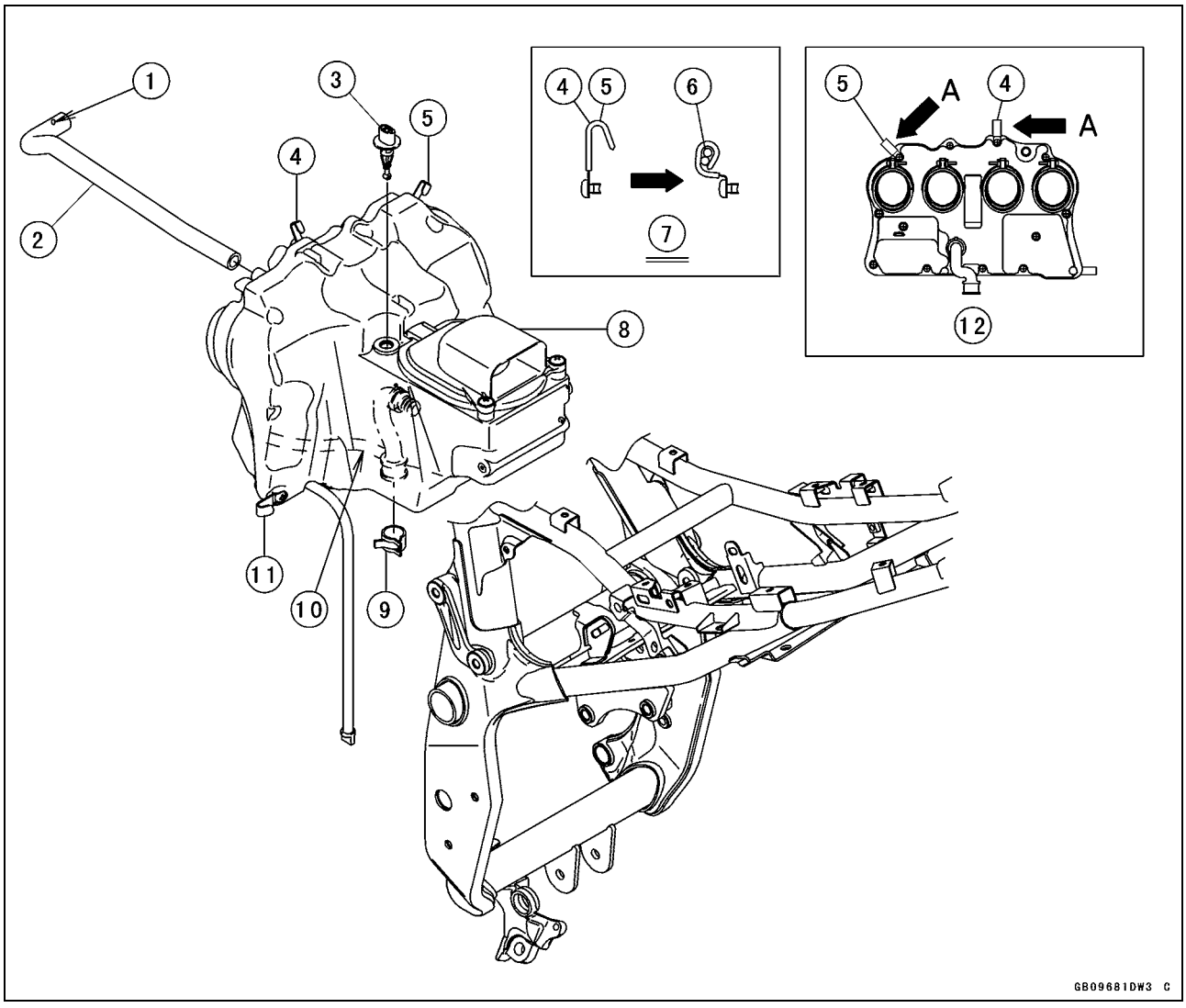

1. White Paint
2. Air Switching Valve Hose (From Air Switching Valve to Air Cleaner Housing)
3. Intake Air Temperature Sensor
4. Clamp
5. Clamp
6. Main Harness (Main Throttle and Subthrottle Sensor Leads)
7. Viewed A (Bend the clamp as shown in the figure. Do not touch the main harness (main throttle and subthrottle sensor leads) to the corner of the clamp.)
8. Air Cleaner Housing
9. Install the clamp as shown in the figure.
10. Run the starter motor cable to the right side of the breather hose.
11. Hold the neutral switch, sidestand switch and alternator leads.
12. Viewed Front Side

Cable, Wire, and Hose Routing

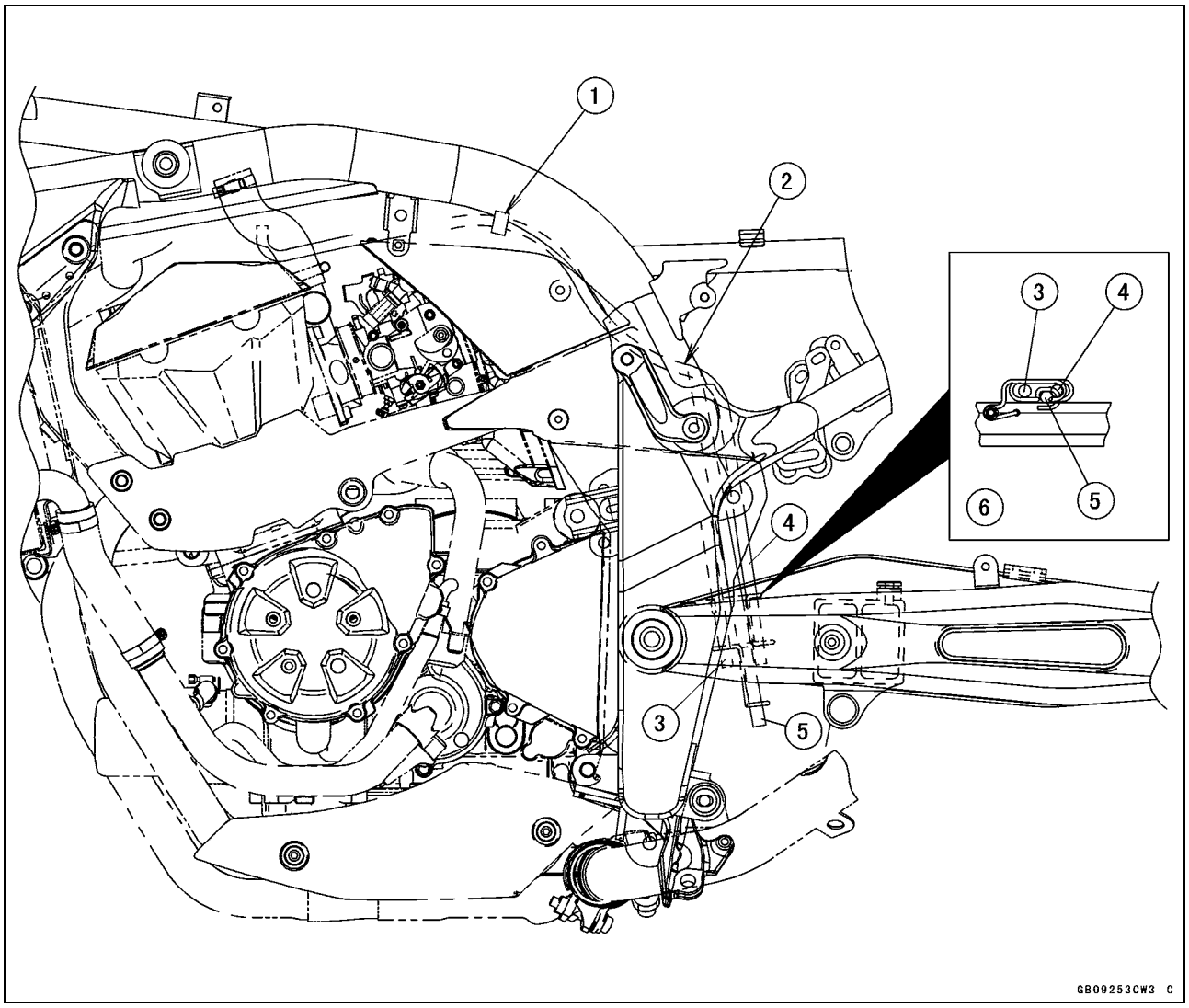

1. Hold the fuel tank drain hose with the left side clamp of the fuel tank.
2. Run the fuel tank drain hose between the air cleaner housing and frame.
3. Air Cleaner Drain Hose
4. Reserve Tank Overflow Hose (Run the reserve tank overflow hose (from fitting) into the lower loop clamp as shown in the figure.)
5. Fuel Tank Drain Hose
6. Swingarm Left Side

Cable, Wire, and Hose Routing

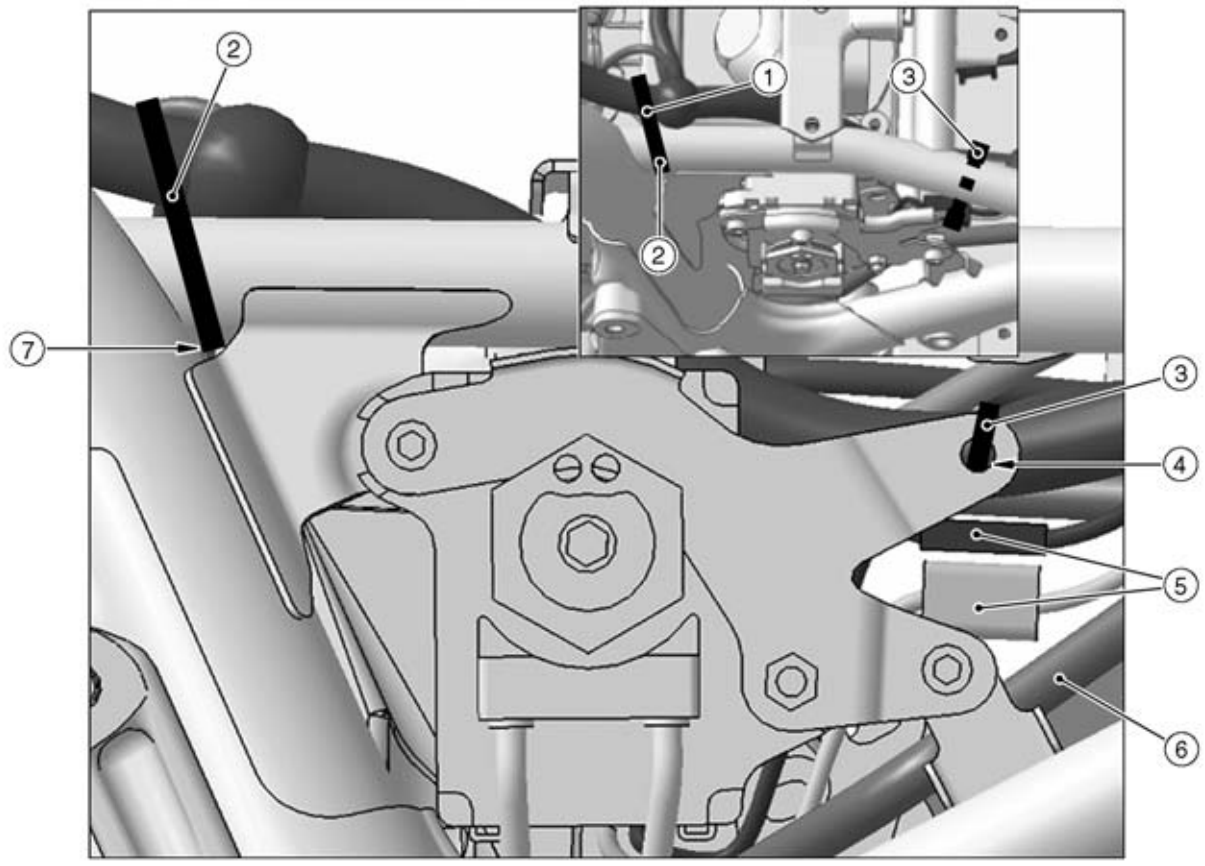

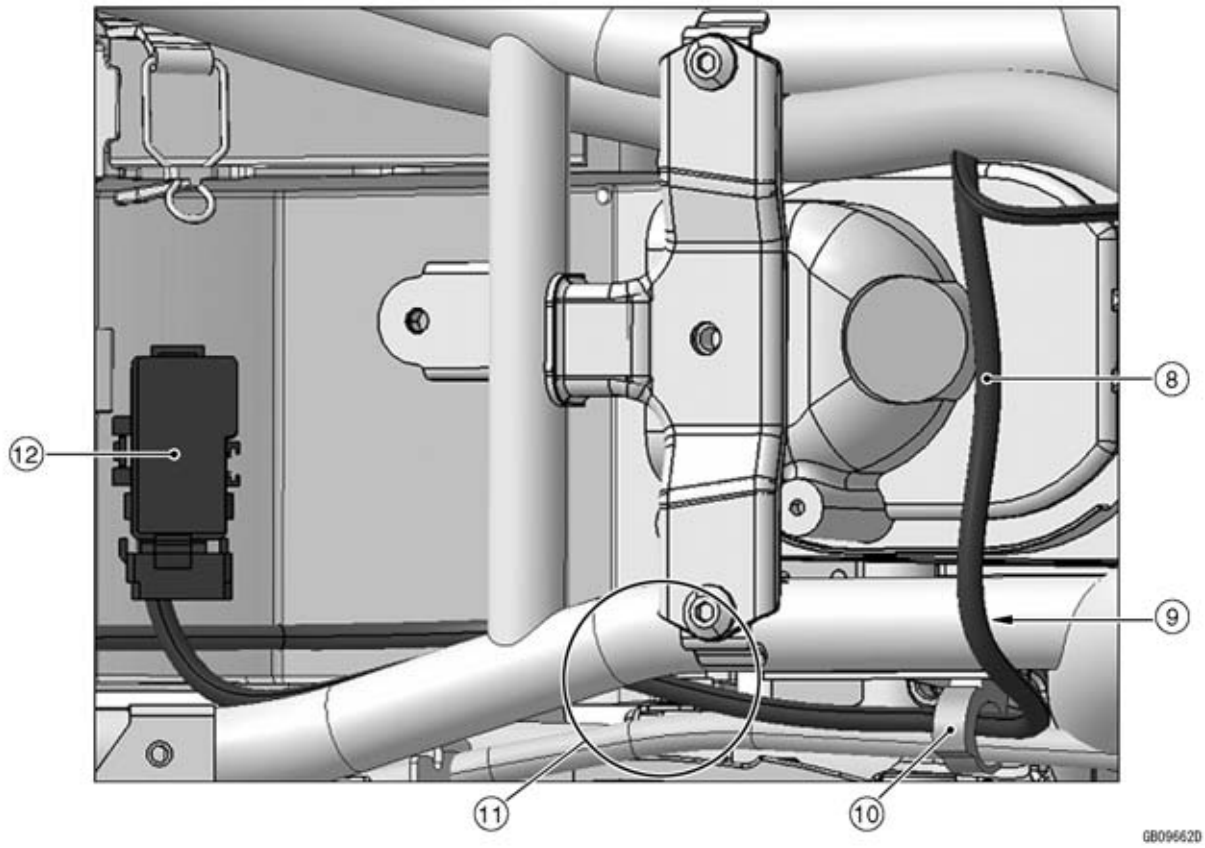

GB09662D G

Cable, Wire, and Hose Routing

1. Hold the front at the interchange point of the intake air temperature sensor lead.
2. Band (Hold the main harness and frame as shown in the figure.)
3. Band (Hold the main harness and exhaust butterfly valve actuator bracket as shown in the figure. Run the main harness over the reserve tank overflow hose (from fitting).)
4. Band (Insert the band into the hole of the exhaust butterfly valve actuator bracket.)
5. Run the exhaust butterfly valve actuator sensor leads to the outside of the main harness.
6. Reserve Tank Overflow Hose (From Fitting)
7. Insert the band into the corner of the frame as shown in the figure.
8. Main Harness (To Fuse Box 1)
9. Run the main harness (to fuse box 1) over the frame.
10. Hold the main harness (to fuse box 1) and reserve tank hose.
11. Run the main harness (to fuse box 1) under the frame and over the reserve tank hose.
12. Fuse Box 1

Cable, Wire, and Hose Routing

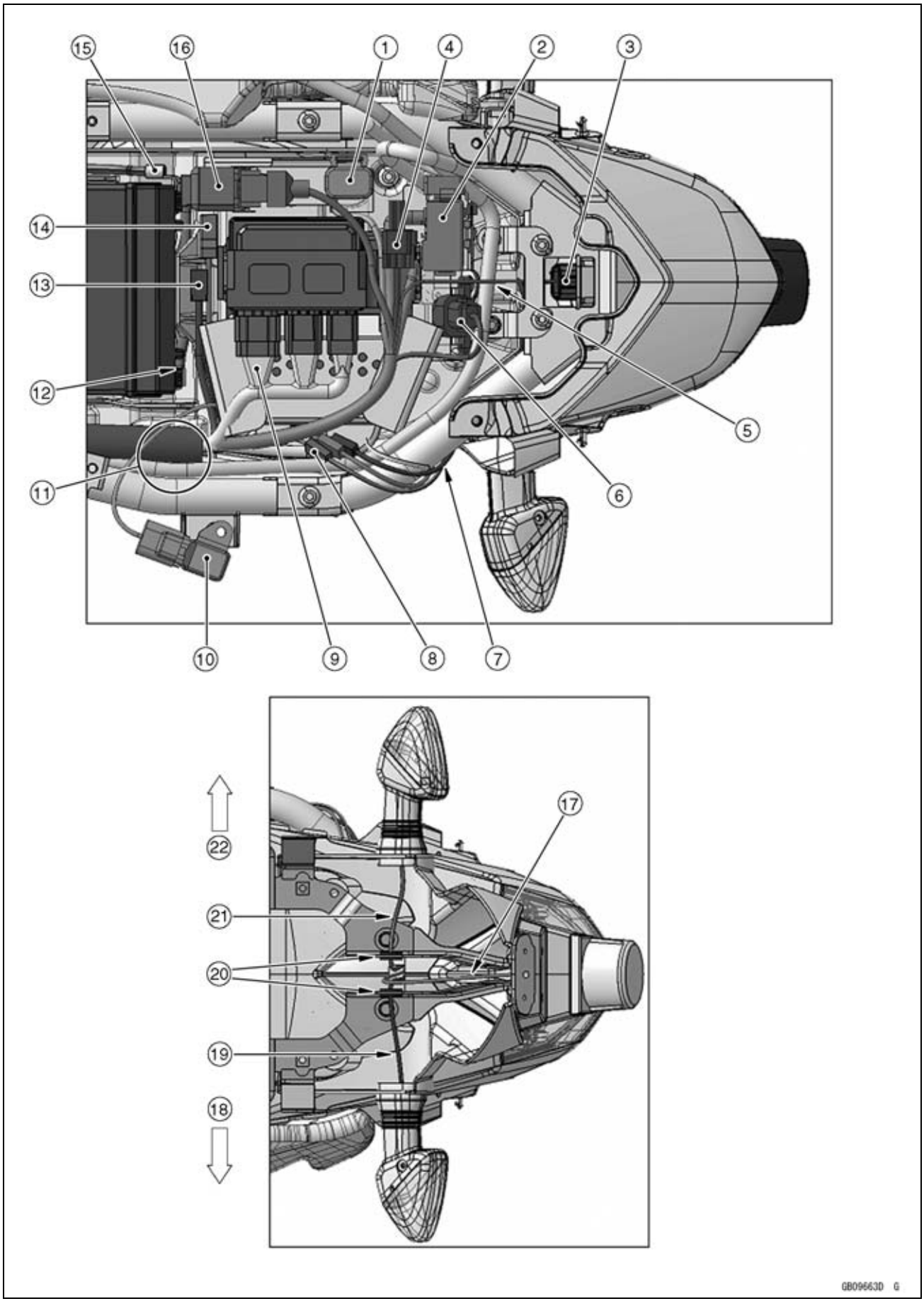

Cable, Wire, and Hose Routing

1. Turn Signal Relay (Position the turn signal relay lead in the lower side.)
2. Fuse Box 2 (Do not run the main harness (to fuse box 2) to the lower side of the vehicle-down sensor.)
3. Tail/Brake Light (LED) Lead Connector
4. Immobilizer/Kawasaki Diagnostic System Connector
5. Run the tail/brake light (LED) lead over the reserve tank overflow hose (from fitting).
   Do not run the tail/brake light (LED) lead to the lower side of the vehicle-down sensor.
6. Vehicle-down Sensor
7. Run the license plate light, left and right rear turn signal light leads to the outside of the frame.
8. Run the license plate light, left and right rear turn signal light lead connectors over the reserve tank overflow hose (from fitting).
9. Relay Box Lead
10. Atmospheric Pressure Sensor
11. From this position, Run the reserve tank overflow hose (from fitting) under the main harness as shown in the figure.
12. Battery Positive Lead
13. Battery Positive Lead Connector (ABS Equipped Models)
14. Ground Lead Connector
15. Ground Lead
16. Starter Relay
17. License Plate Light Lead
18. Right
19. Right Rear Turn Signal Light Lead
20. After inserting the dampers in the brackets, run the right and left turn signal light leads into the dampers.
21. Left Rear Turn Signal Light Lead
22. Left

Cable, Wire, and Hose Routing

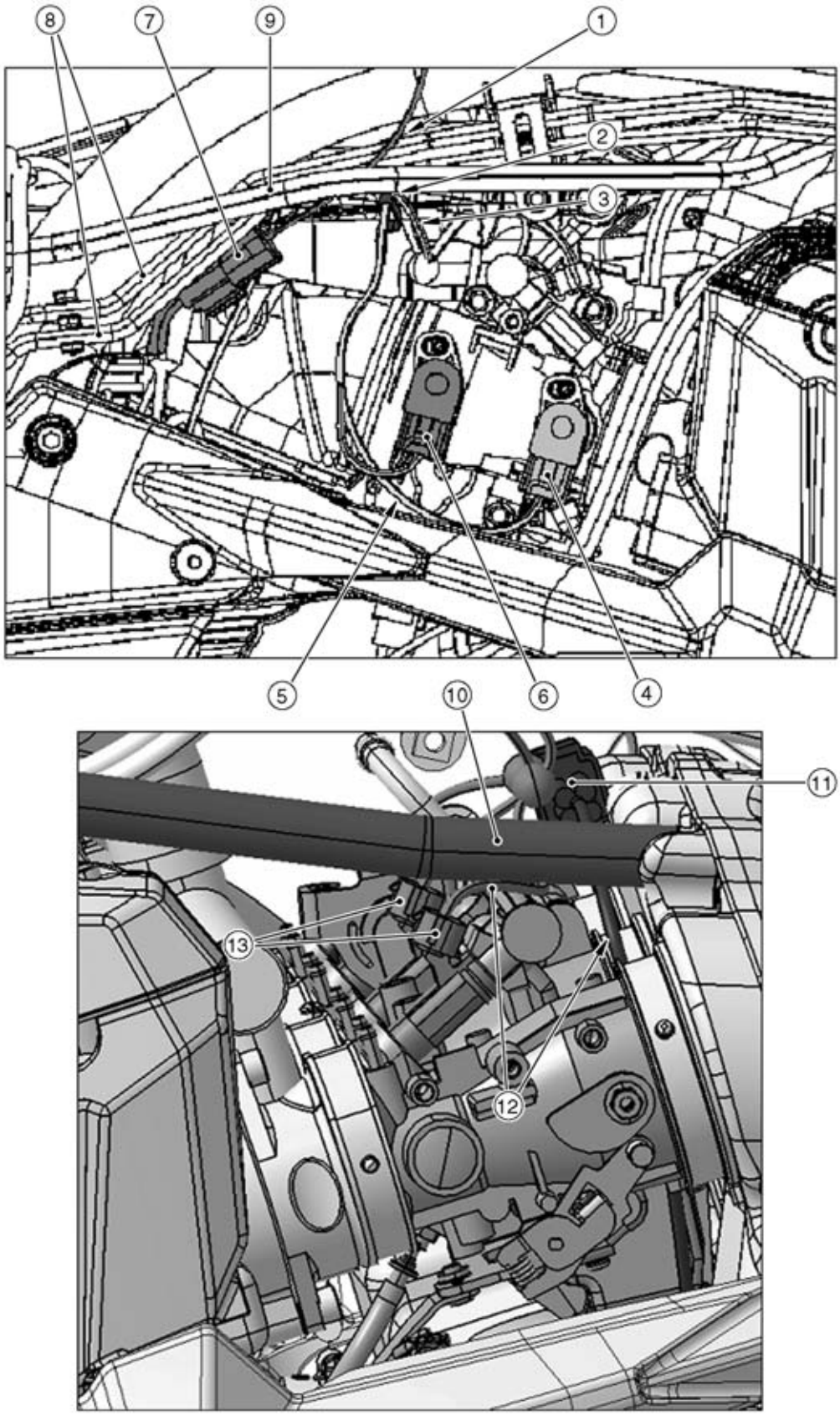

Cable, Wire, and Hose Routing

1. Run the fuel level sensor lead to the inside of the reserve tank hose.
   Run the fuel level sensor lead to the inside of the reserve tank hose and outside of the brake pipes (ABS equipped models).
2. When clamping the main harness (to main throttle sensor and subthrottle sensor), do not stretch the main harness.
3. Run the main harness (to main throttle sensor and subthrottle sensor) under the reserve tank hose.
   Run the main harness (to main throttle sensor and subthrottle sensor) under the reserve tank hose and brake pipes (ABS equipped models).
4. Main Throttle Sensor Lead Connector
5. Run the main throttle sensor lead to the inside of the subthrottle sensor lead.
6. Subthrottle Sensor Lead Connector
7. Fuel Level Sensor Lead Connector
8. Brake Pipes (ABS Equipped Models)
9. Reserve Tank Hose
10. Air Switching Valve Hose (From Air Switching Valve to Air Cleaner Housing)
11. Subthrottle Valve Actuator Lead Connector
12. Run the subthrottle valve actuator and fuel injector leads under the air switching valve hose (from air switching valve to air cleaner housing).
13. Fuel Injector Connector

Cable, Wire, and Hose Routing

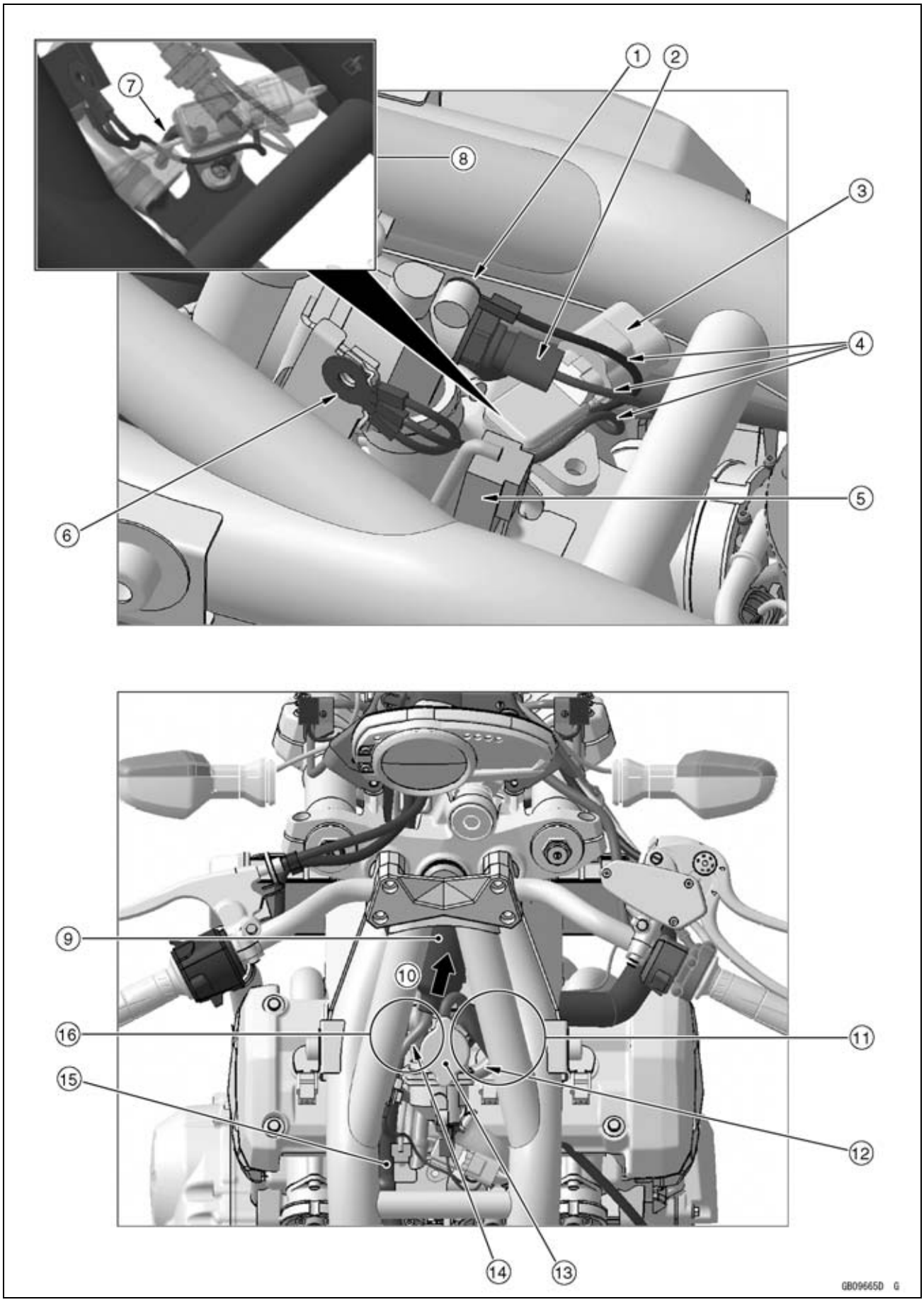

Cable, Wire, and Hose Routing

1. Meter Ground Lead
2. Water Temperature Sensor
3. Intake Air Pressure Sensor Lead Connector
4. Run the frame ground lead, meter ground lead and water temperature sensor lead over the intake air pressure sensor.
5. Camshaft Position Sensor Lead Connector
6. Frame Ground Lead
7. Intake Air Pressure Sensor Tube
8. Run the intake air pressure sensor tube to the frontside of the frame ground lead.
9. Put the rubber cover to the inside of the frame as shown in the figure.
10. To Immobilizer Antenna, Ignition Switch and Radiator Fan Motor
11. Run the clutch cable over the stick coil lead.
12. Stick Coil Lead
13. Thermostat Housing
14. Run the immobilizer antenna, ignition switch and radiator fan motor leads under the left side of the thermostat housing and over the main harness.
15. Main Harness
16. Run the throttle cables under the immobilizer antenna and stick coil leads.

Cable, Wire, and Hose Routing

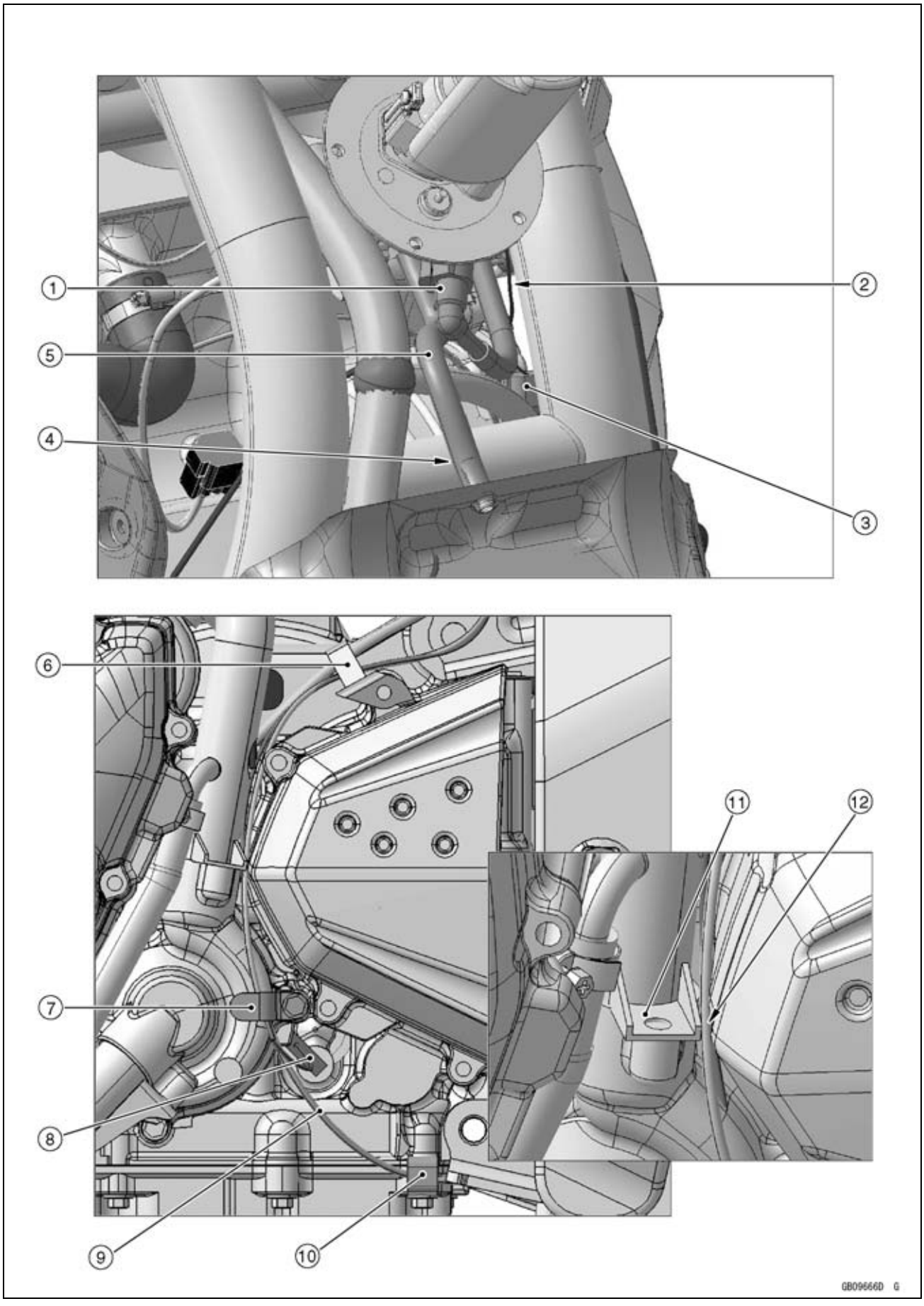

Cable, Wire, and Hose Routing

1. Fuel Outlet Hose
2. Run the fuel pump lead to the outside of the fuel outlet hose.
3. Fuel Pump Lead Connector
4. Install the fuel intake hose so that the white mark side faces outlet pipe of the fuel tank.
5. Fuel Intake Hose
6. Clamp (Hold the sidestand switch, neutral switch and alternator leads.)
7. Clamp (Hold the sidestand switch and neutral switch leads.)
8. Neutral Switch Lead
9. Sidestand Switch Lead
10. Clamp (Hold the sidestand switch lead.)
11. Bracket of the Water Pipe (From Water Pump to Cylinder)
12. Run the sidestand switch and neutral switch leads to the inside of the bracket of the water pipe (from water pump to cylinder).

Cable, Wire, and Hose Routing

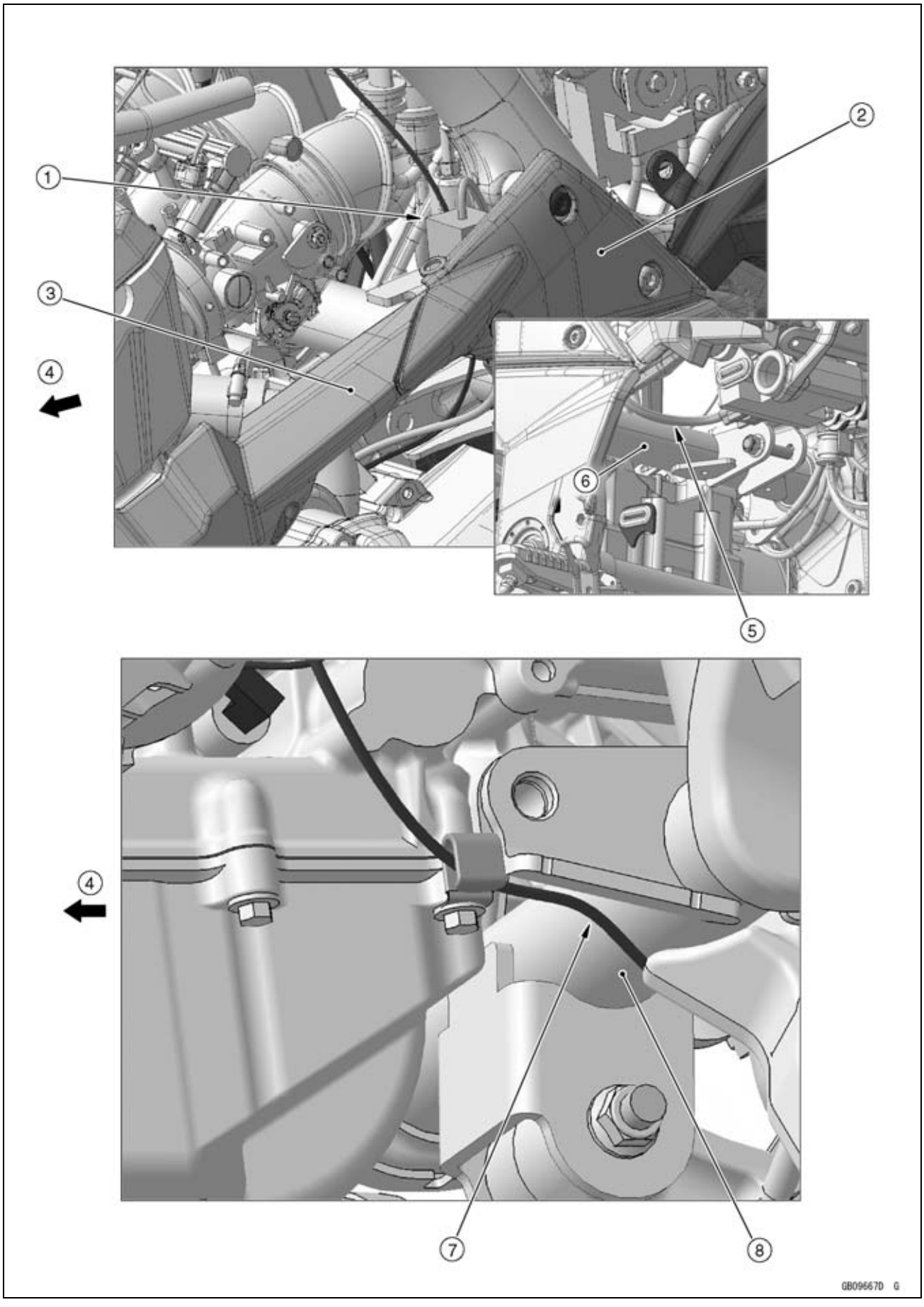

Cable, Wire, and Hose Routing

1. Put the alternator lead connector to the inside of the left frame cover and left subframe.
2. Left Frame Cover
3. Left Subframe
4. Front
5. Run the alternator lead over the frame cross pipe.
6. Frame Cross Pipe
7. Run the sidestand switch lead under the frame cross pipe.
8. Frame Cross Pipe

Cable, Wire, and Hose Routing

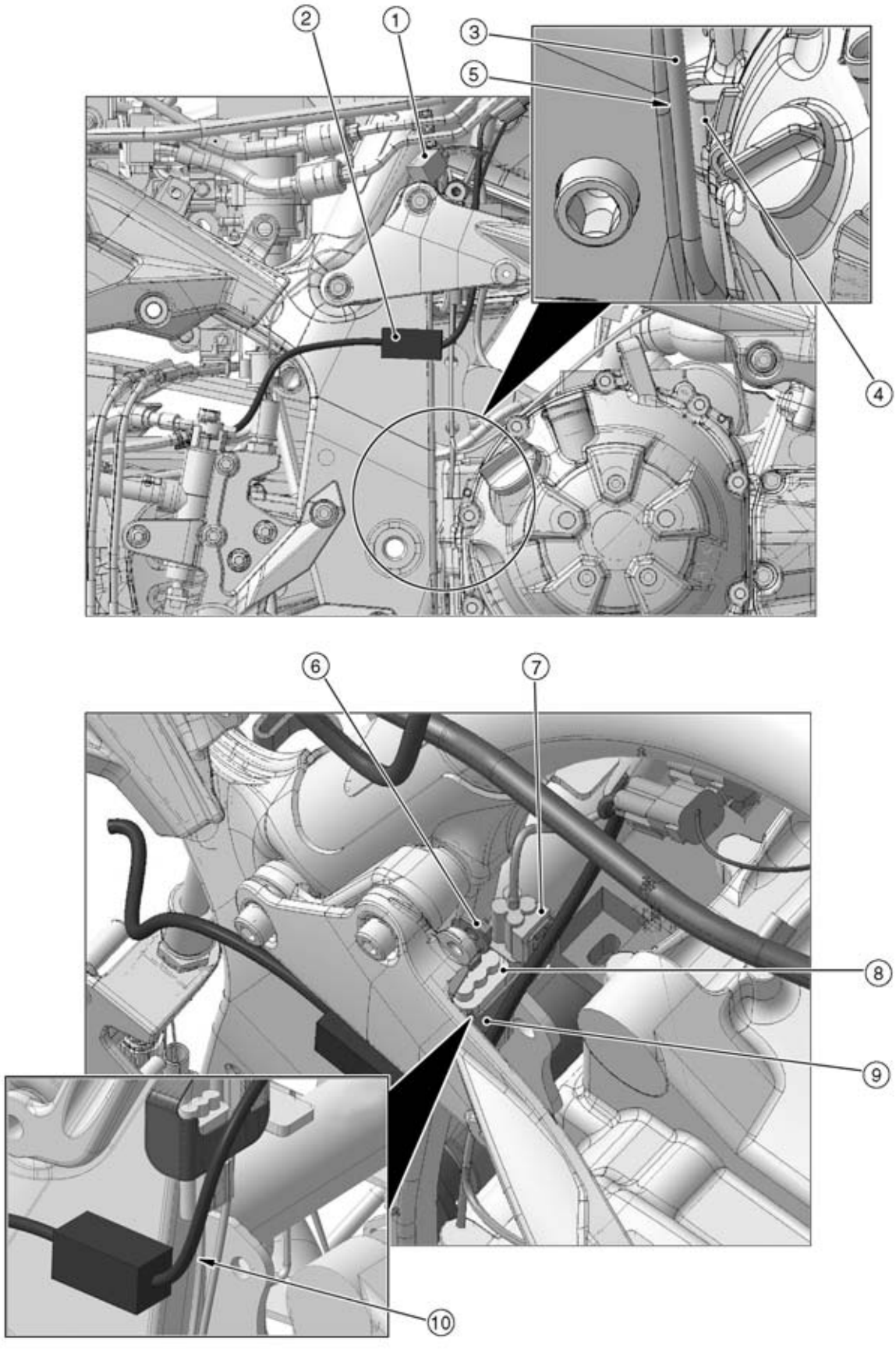

Cable, Wire, and Hose Routing

1. Put the rear brake light switch lead connector to the inside of the right sub side cover.
2. Put the rear wheel rotation sensor lead connector to the inside of the right frame cover. (ABS equipped models)
3. Oxygen Sensor Lead
4. Crankcase Boss
5. Do not pinch the oxygen sensor lead between the engine and frame (Run the oxygen sensor lead to the inside of the crankcase boss.).
6. After installing the connectors to the bracket, tighten the bolt to the bracket and subframe.
7. Oxygen Sensor Lead Connector
8. Oil Pressure Switch/Crankshaft Sensor Lead Connector
9. Install the oxygen sensor and oil pressure switch/crankshaft sensor lead connectors to the bracket.
10. Run the oil pressure switch/crankshaft sensor lead to the outside of the oxygen sensor lead.

Cable, Wire, and Hose Routing

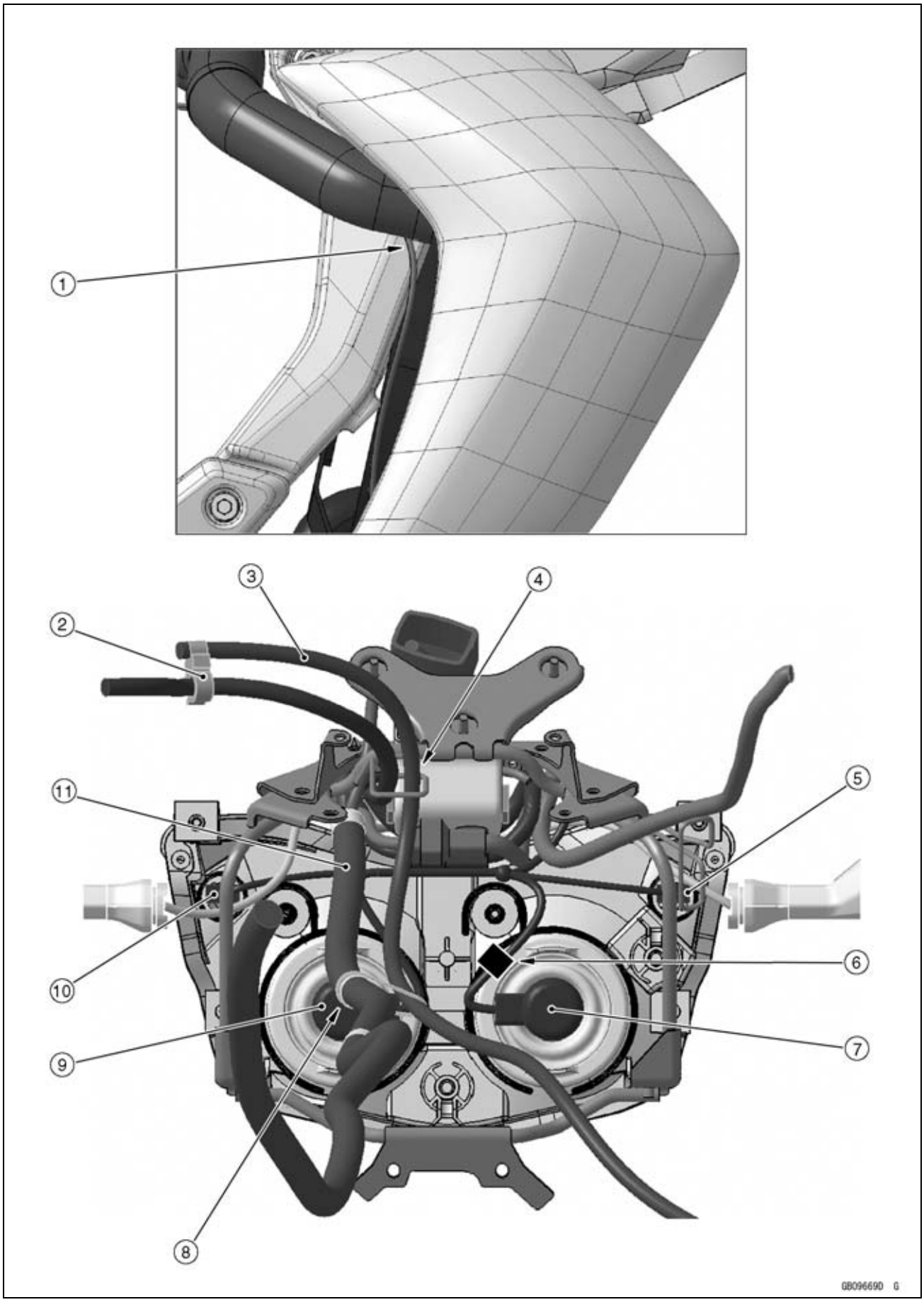

Cable, Wire, and Hose Routing

1. Run the horn lead between subframe and radiator hose.
2. Clamp (Hold the clutch cable and left switch housing lead.)
3. Clutch Cable
4. Run the clutch cable and left switch housing lead into the guide of the upper fairing bracket so that the clutch cable is inside.
5. Right City Light Lead Connector
6. Green tape
7. Headlight (High and Low Beams)
8. Band (Hold the main harness and clutch cable on the gray taped position of the main harness.)
9. Headlight (High Beam)
10. Left City Light Lead Connector
11. Main Harness

Cable, Wire, and Hose Routing

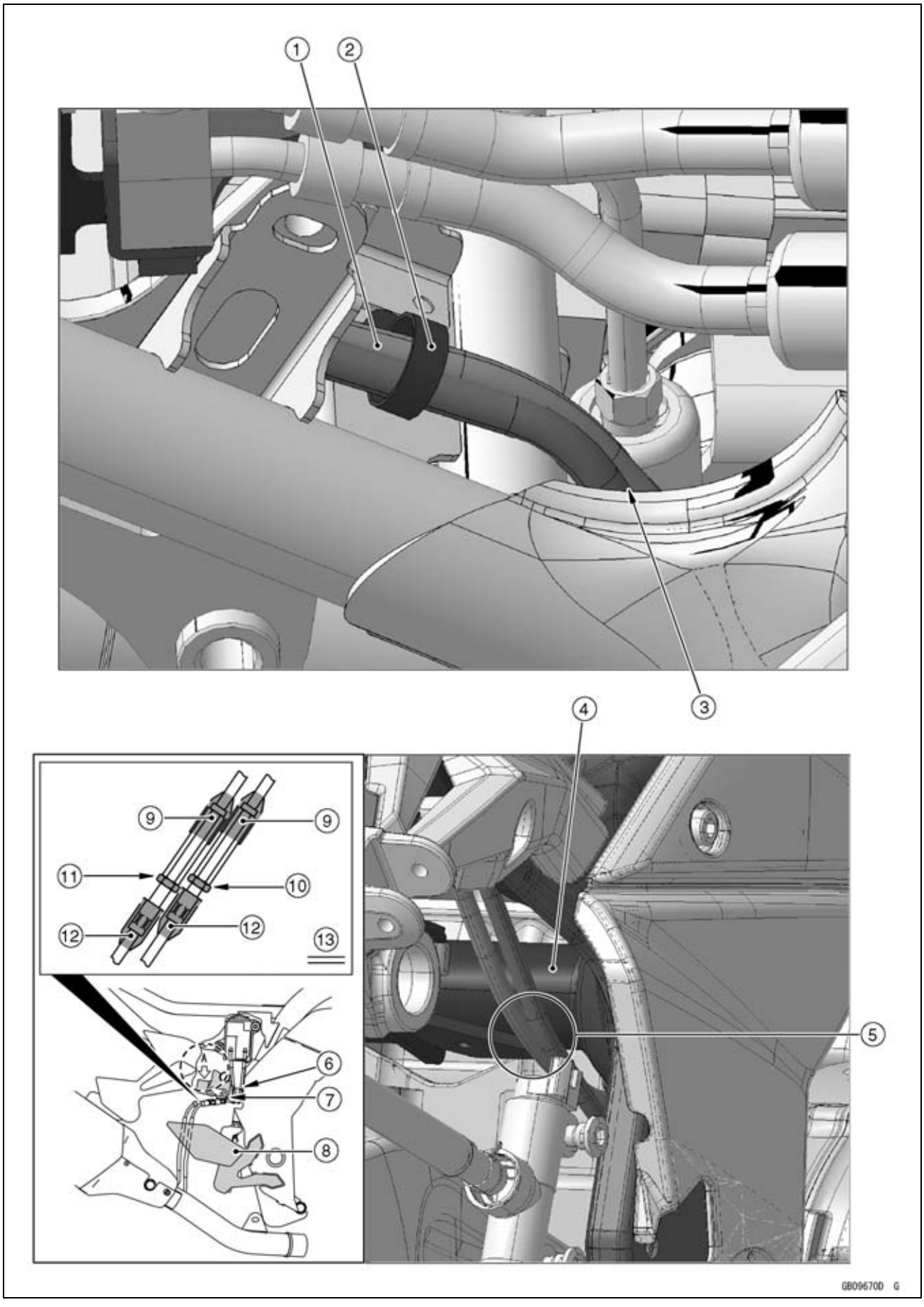

Cable, Wire, and Hose Routing

1. Battery negative cable
2. Clamp (Run the starter motor cable and battery negative cable into the clamp.)
3. Run the starter motor cable and battery negative cable to the outside of the brake hose (ABS Equipped Models).
4. Frame Cross Pipe
5. Run the starter motor cable and battery negative cable under the frame cross pipe.
6. Regulator/Rectifier
7. Clamp
8. Right Guard Bracket
9. Dust Covers
10. Exhaust Butterfly Valve Close Cable (Black)
11. Exhaust Butterfly Valve Open Cable (White)
12. Dust Covers
13. Viewed A

Cable, Wire, and Hose Routing

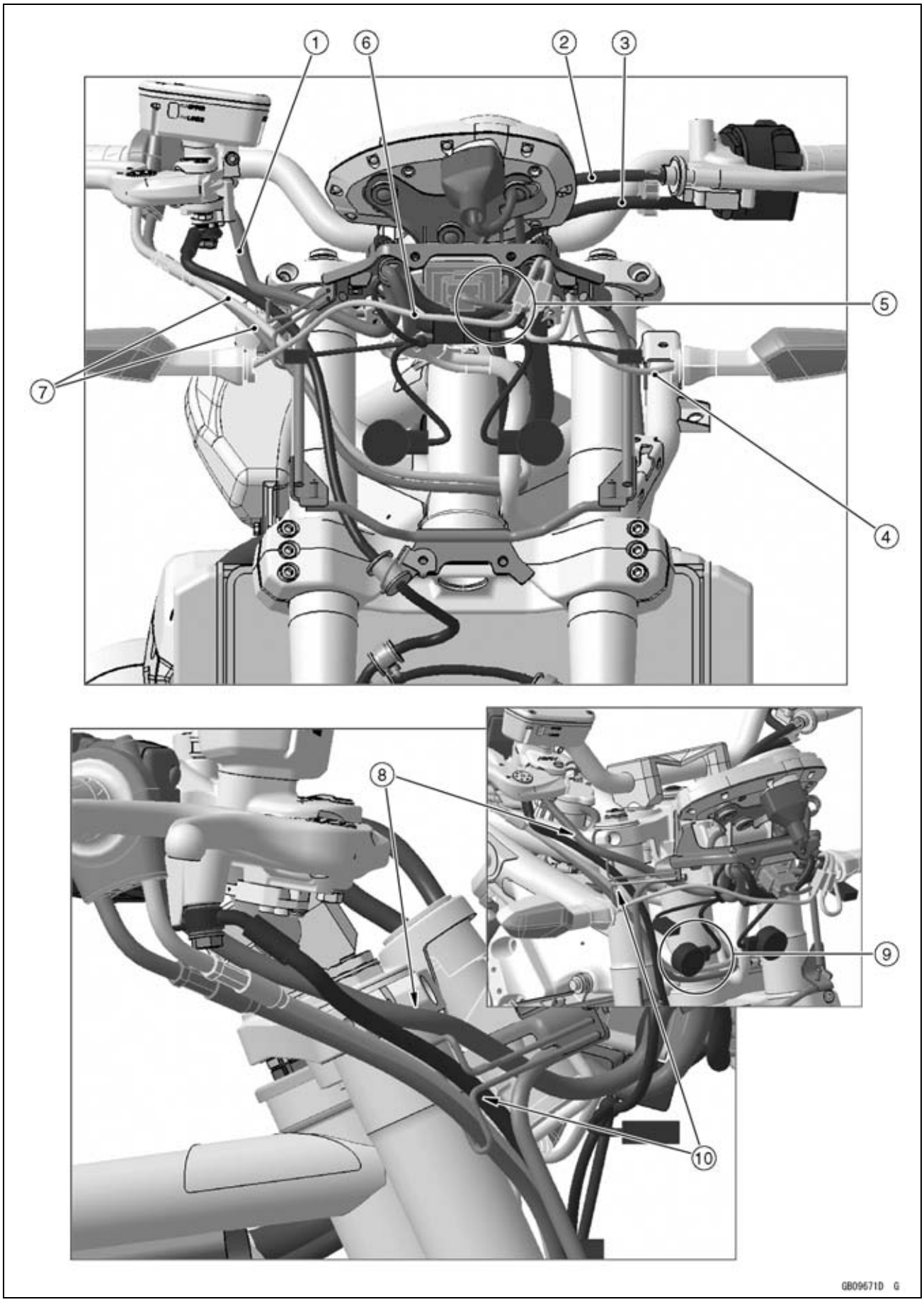

Cable, Wire, and Hose Routing

1. Right Switch Housing Lead
2. Clutch Cable
3. Left Switch Housing Lead
4. Left Turn Signal Lead
5. Run the immobilizer amplifier lead inside of the left and right turn signal light lead connectors.
6. Right Turn Signal Light Lead
7. Throttle Cables
8. Run the right switch housing lead over the upper fairing bracket.
9. Run the throttle cables under the headlight connector.
10. Clamp (Run the brake hose, throttle cable (accelerator) and throttle cable (deccelerator) in order from upper side.)

Cable, Wire, and Hose Routing

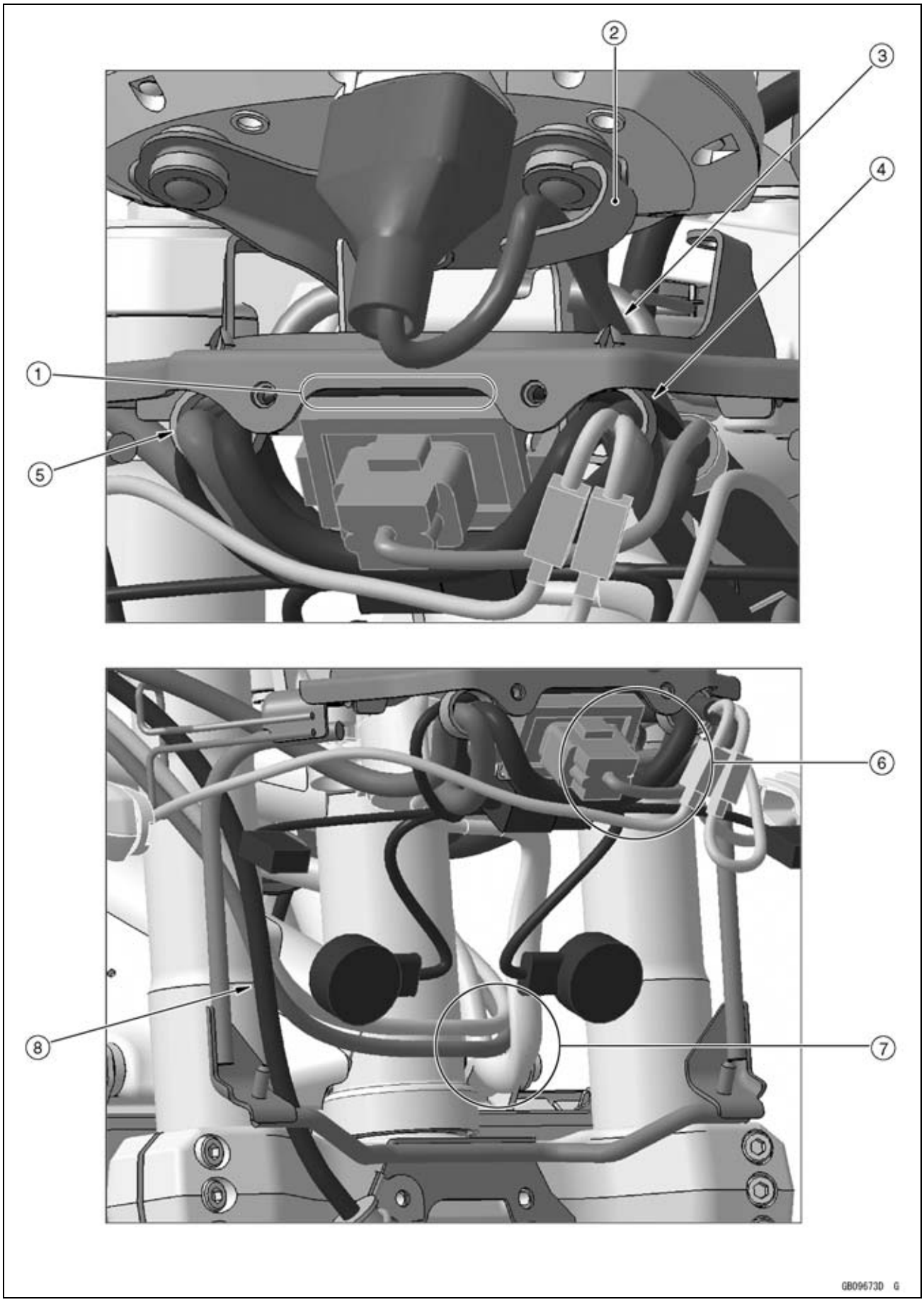

Cable, Wire, and Hose Routing

1. Run the headlight lead over the immobilizer amplifier and behind of the clamp.
2. Clamp (Install the clamp with the meter mounting screw and hold the meter lead.)
3. Run the meter lead inside of the bracket.
4. Insert the clamp in the bracket and hold the main harness and left switch housing lead.
5. Insert the clamp in the bracket and hold the right and left switch housing leads.
6. Run the immobilizer amplifier lead front of the left switch housing lead.
7. Run the ignition switch lead under the throttle cables.
8. Run the brake hose in front of the throttle cables and behind of the upper fairing bracket.

Cable, Wire, and Hose Routing

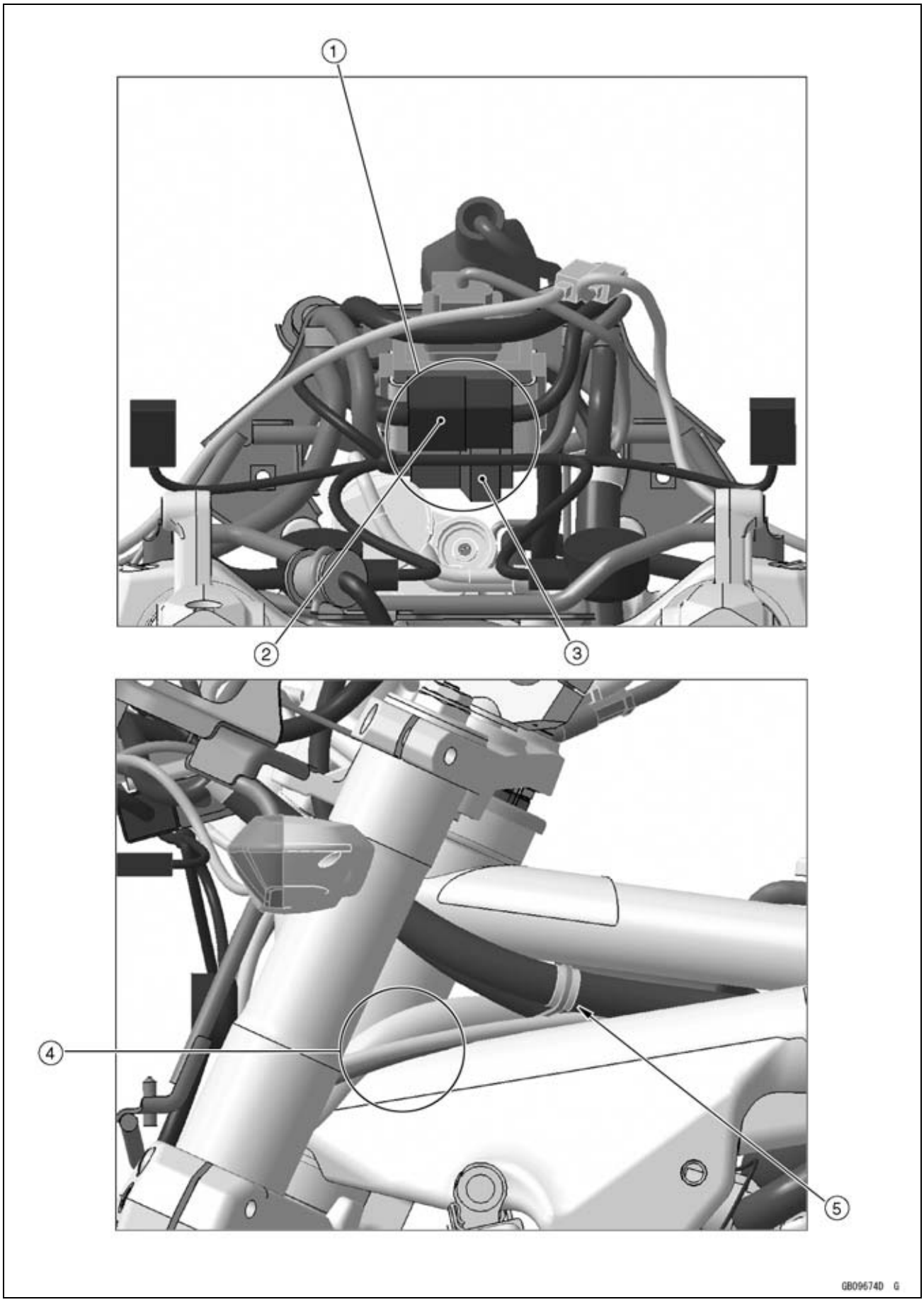

Cable, Wire, and Hose Routing

1. Run the left switch housing lead connector and right switch housing lead connector in order from front side.
2. Connect the left switch housing lead connector under the immobilizer amplifier.
3. Connect the right switch housing lead connector under the immobilizer amplifier.
4. Run the throttle cable (accelerator), throttle cable (deccelerator) and ignition switch lead in order from outside of the frame.
5. Band (Hold the main harness and clutch cable on the gray taped position.)

Cable, Wire, and Hose Routing

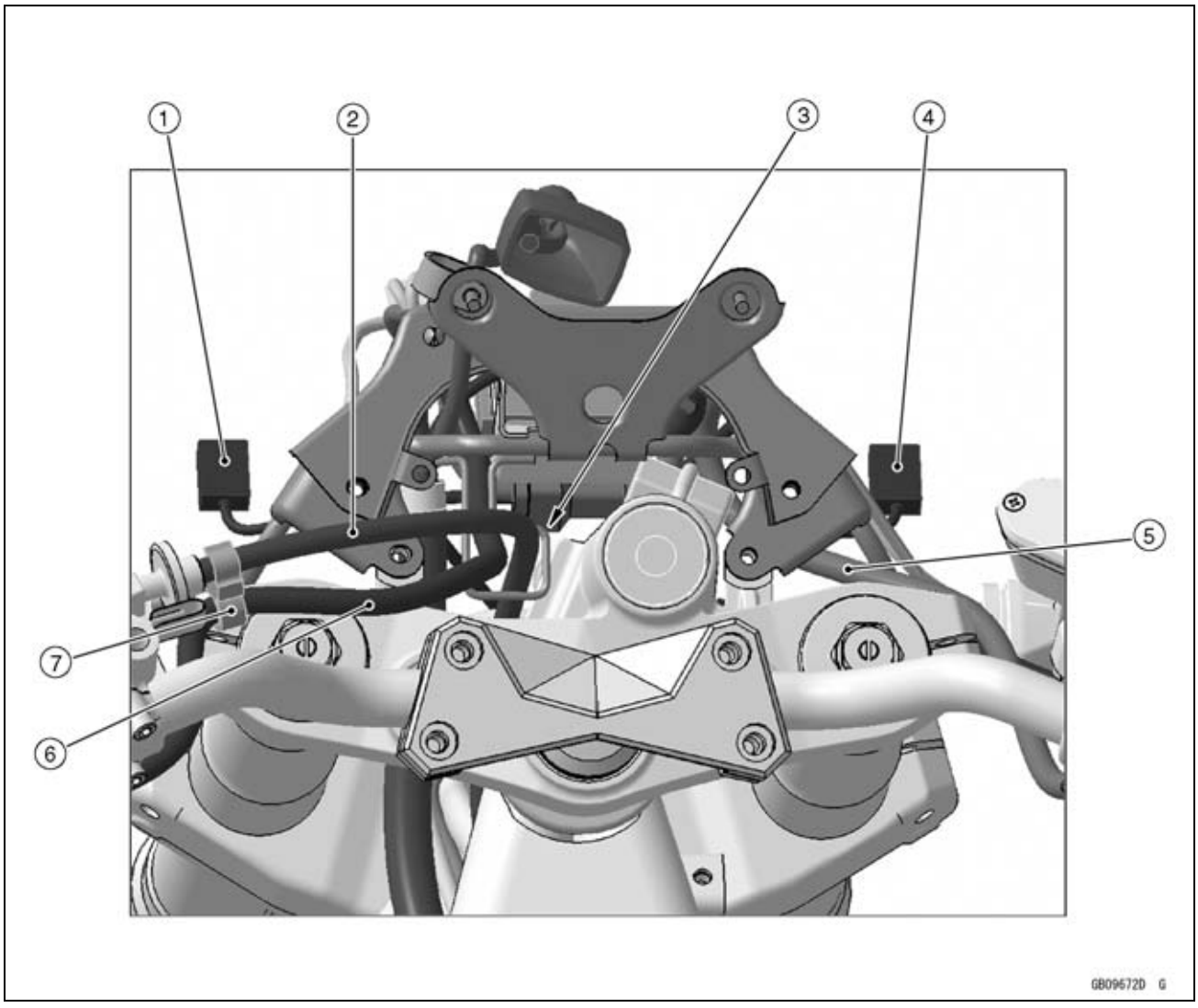

1. Left City Light Lead Connector
2. Clutch Cable
3. Clamp (Run the clutch cable and left switch housing lead in order from the inside of the frame.)
4. Right City Light Lead Connector
5. Right Switch Housing Lead
6. Left Switch Housing Lead
7. Clamp (Hold the clutch cable and left switch housing lead.)

Cable, Wire, and Hose Routing

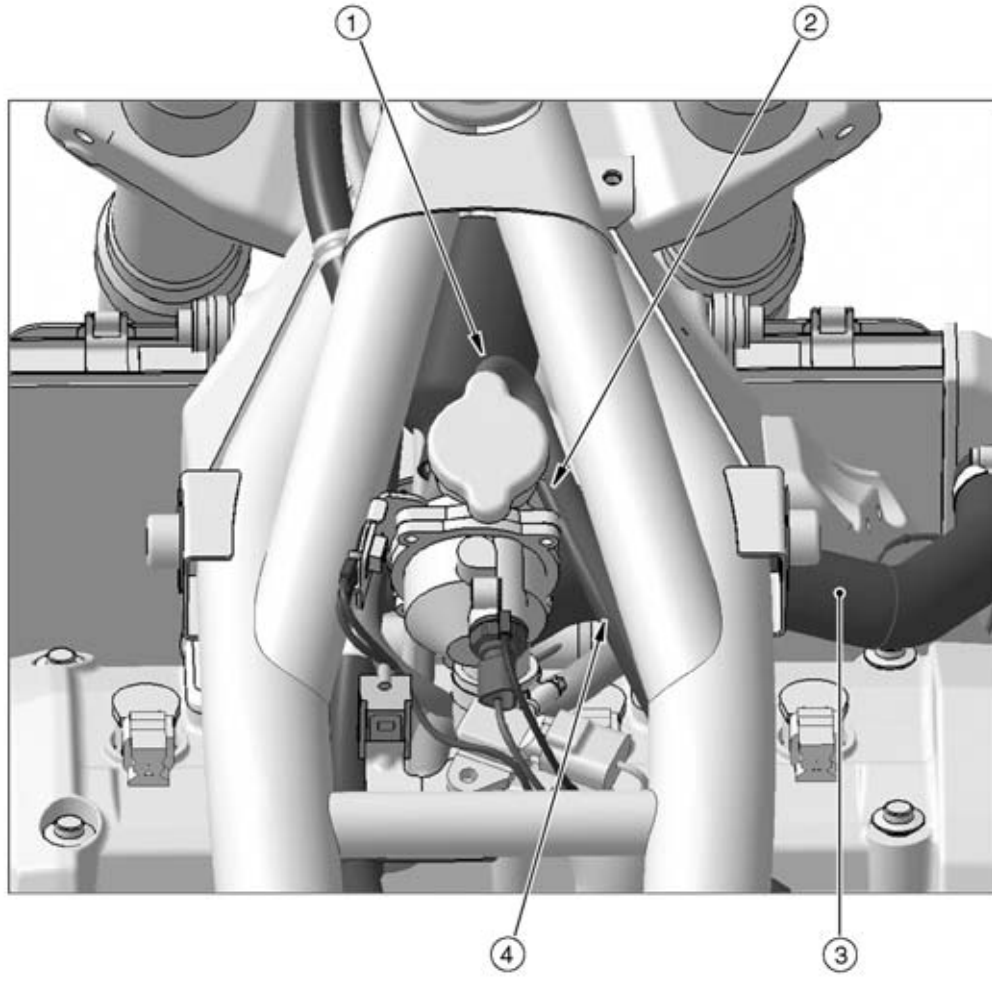

1. Water Hose (From Thermostat Housing to Reserve Tank.)
2. Run the clutch cable under the rubber cover and water hose (from thermostat housing to reserve tank.).
3. Water Hose (From Thermostat Housing to Radiator.)
4. Run the clutch cable over the water hose (from thermostat housing to radiator.) and stick coil lead.

Cable, Wire, and Hose Routing

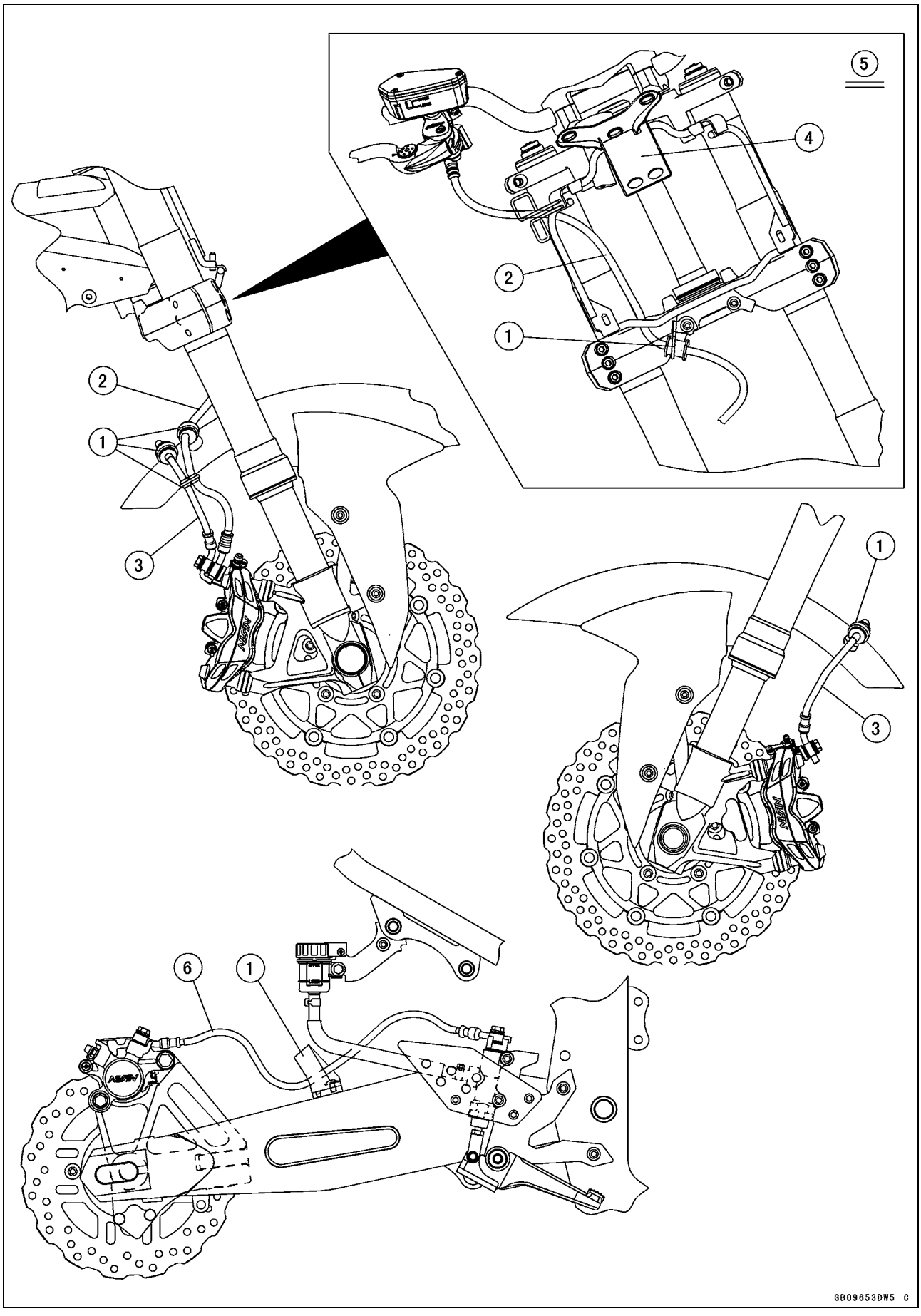

Cable, Wire, and Hose Routing

1. Clamps
2. Brake Hose (From Front Master Cylinder to Right Front Caliper)
3. Brake Hose (From Right Front Caliper to Left Front Caliper)
4. Upper Fairing Bracket
5. Viewed Front Side
6. Brake Hose (From Rear Master Cylinder to Rear Caliper)

Cable, Wire, and Hose Routing

ABS Equipped Models

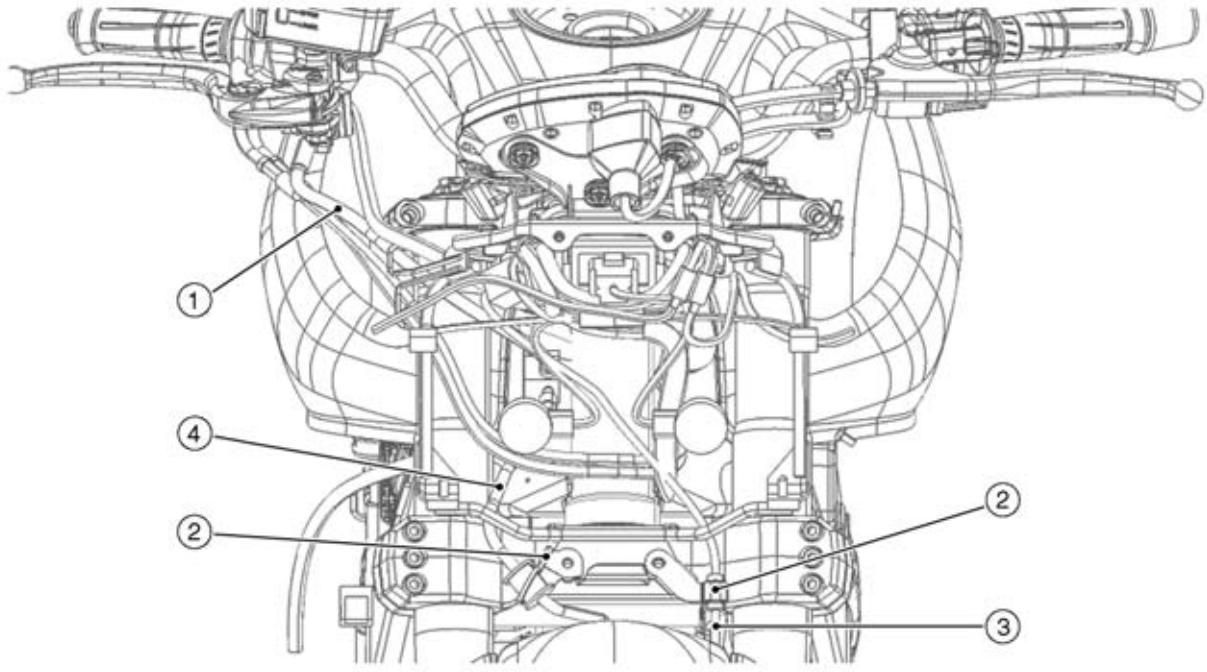

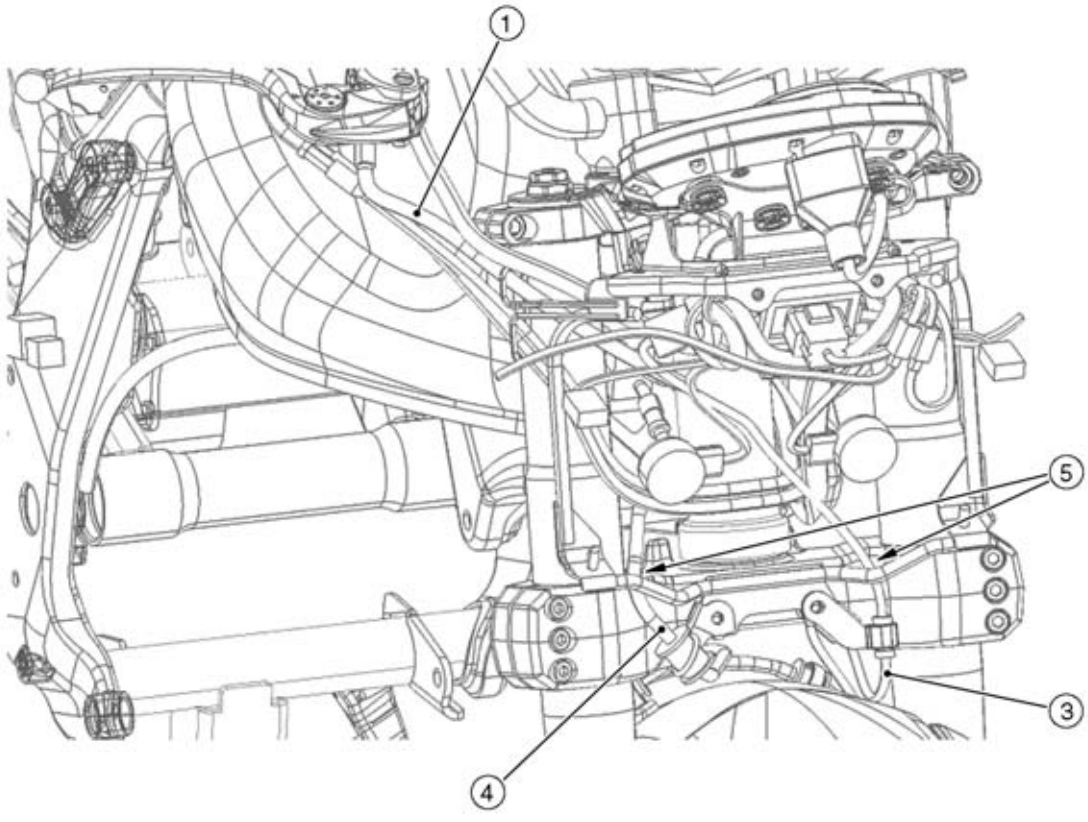

GB09658D G

Cable, Wire, and Hose Routing

1. Brake Hose (From Front Master Cylinder to ABS Hydraulic Unit)
2. Clamps
3. Front Wheel Rotation Sensor Lead
4. Brake Hose (From ABS Hydraulic Unit to Right Front Caliper)
5. Run the brake hose and front wheel rotation sensor lead between the steering stem and upper fairing bracket.

Cable, Wire, and Hose Routing

ABS Equipped Models

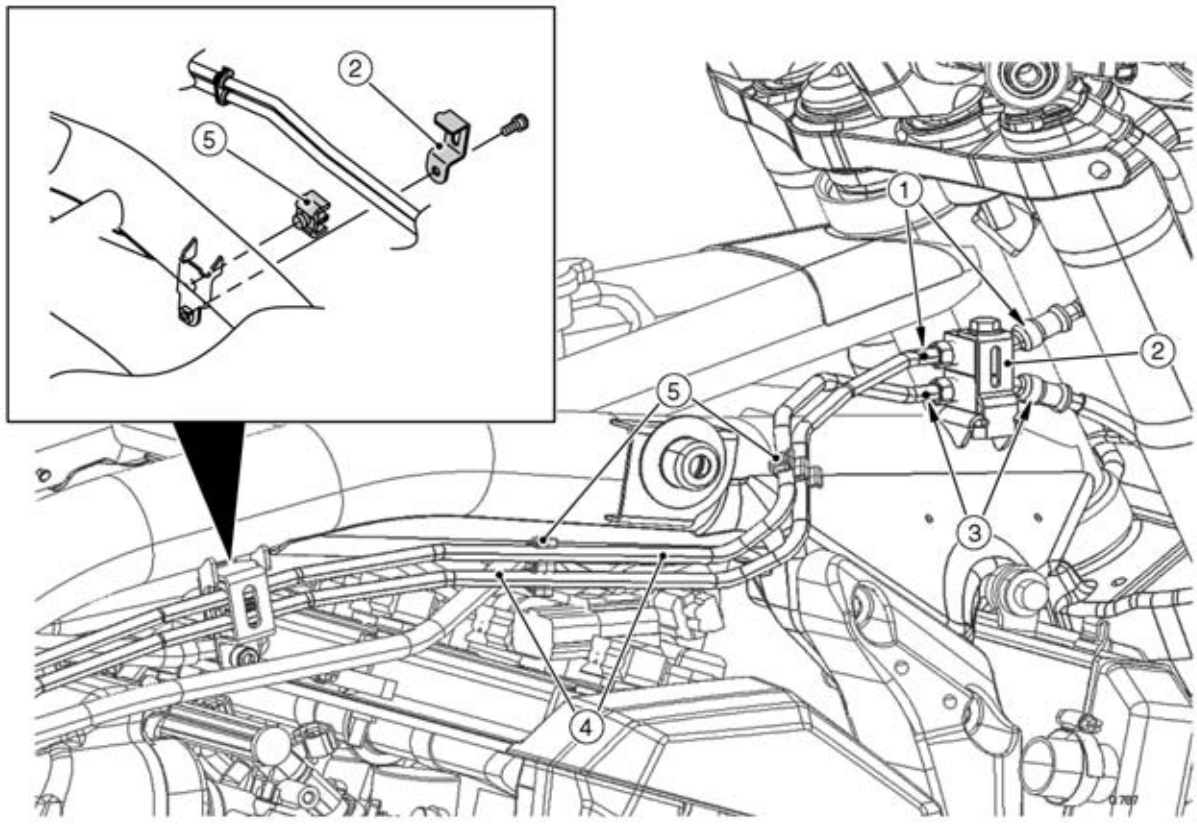

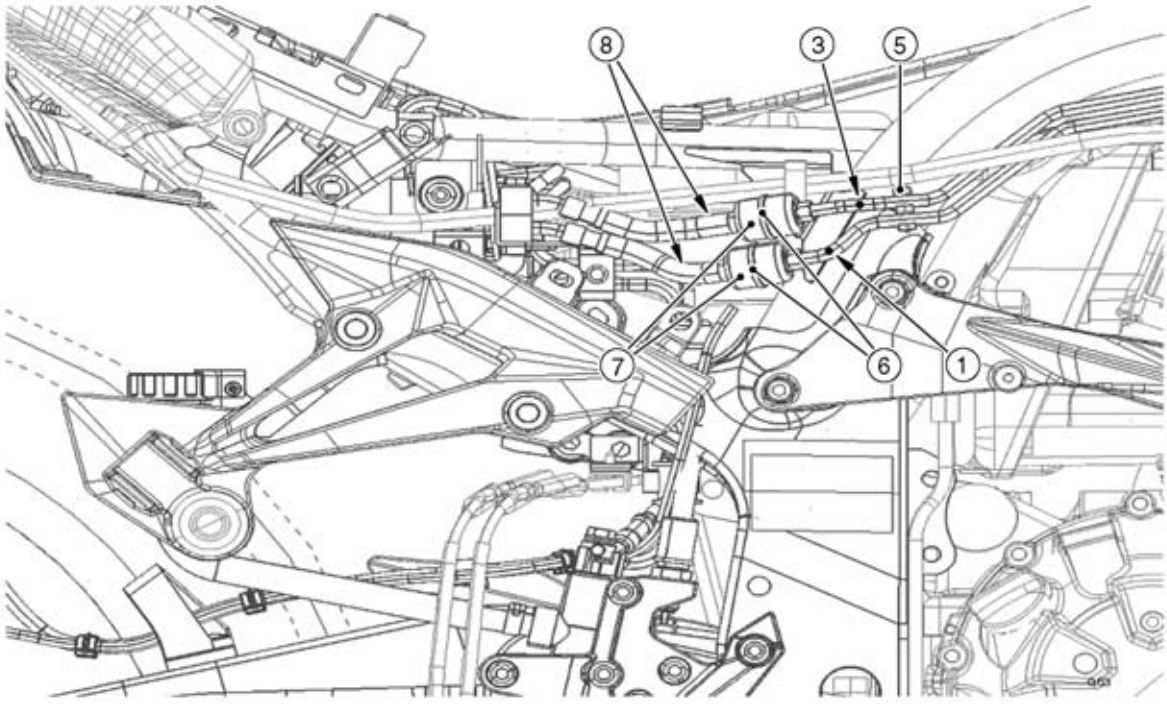

GB096590 G

Cable, Wire, and Hose Routing

1. One White Spot Paint Marks
2. Bracket
3. One Blue Spot Paint Marks
4. Brake Pipe
5. Clamps
6. Bands
7. Grommets
8. Brake Hoses (One White Paint Mark)

Cable, Wire, and Hose Routing

ABS Equipped Models

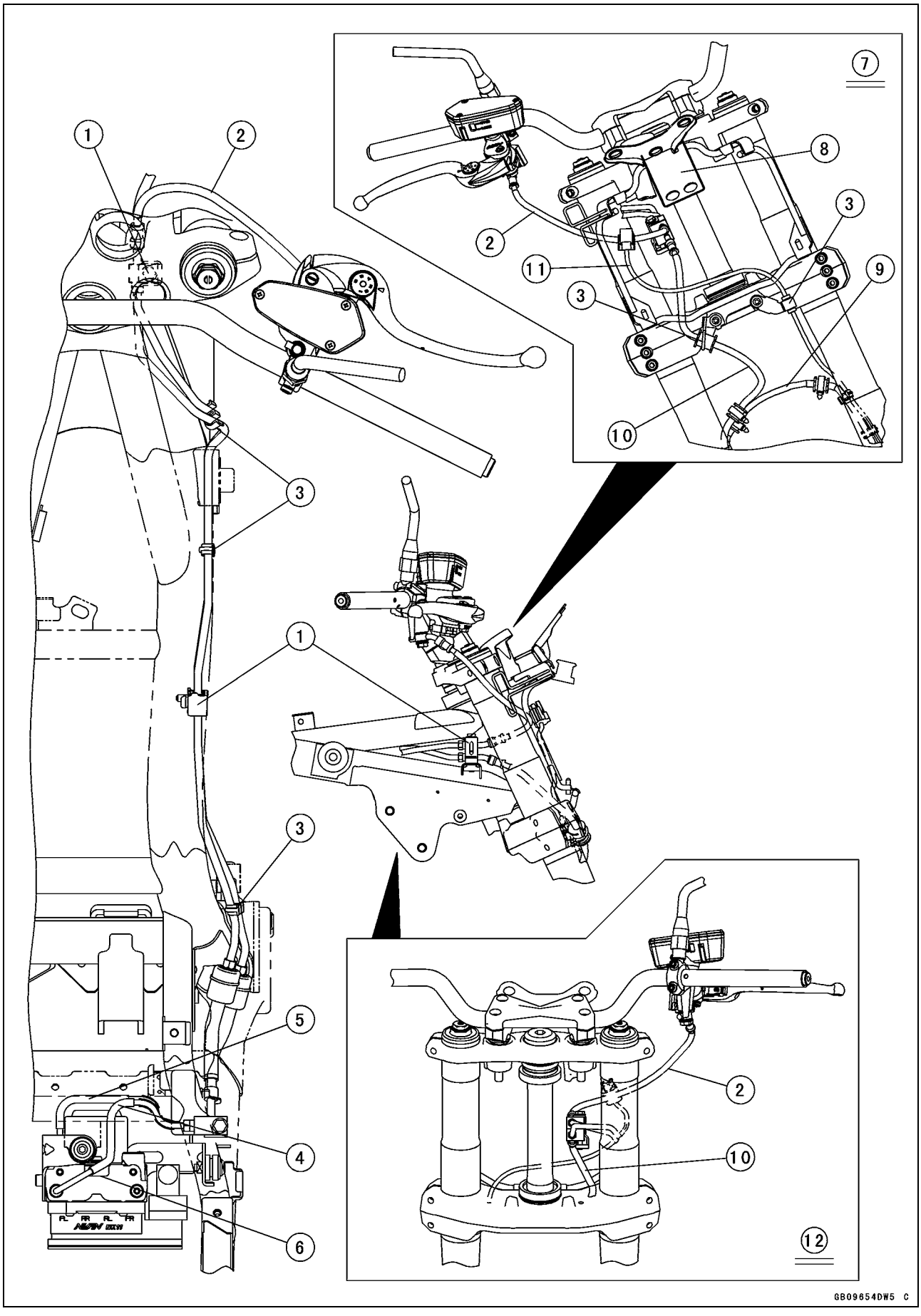

Cable, Wire, and Hose Routing

1. Bracket
2. Brake Hose (From Front Master Cylinder to ABS Hydraulic Unit)
3. Clamps
4. One Blue Spot Paint Mark
5. One White Spot Paint Mark
6. ABS Hydraulic Unit
7. Viewed Front Side
8. Upper Fairing Bracket
9. Brake Hose (From Right Front Caliper to Left Front Caliper)
10. Brake Hose (From ABS Hydraulic Unit to Right Front Caliper)
11. Front Wheel Rotation Sensor Lead
12. Viewed Back Side

Cable, Wire, and Hose Routing

ABS Equipped Models

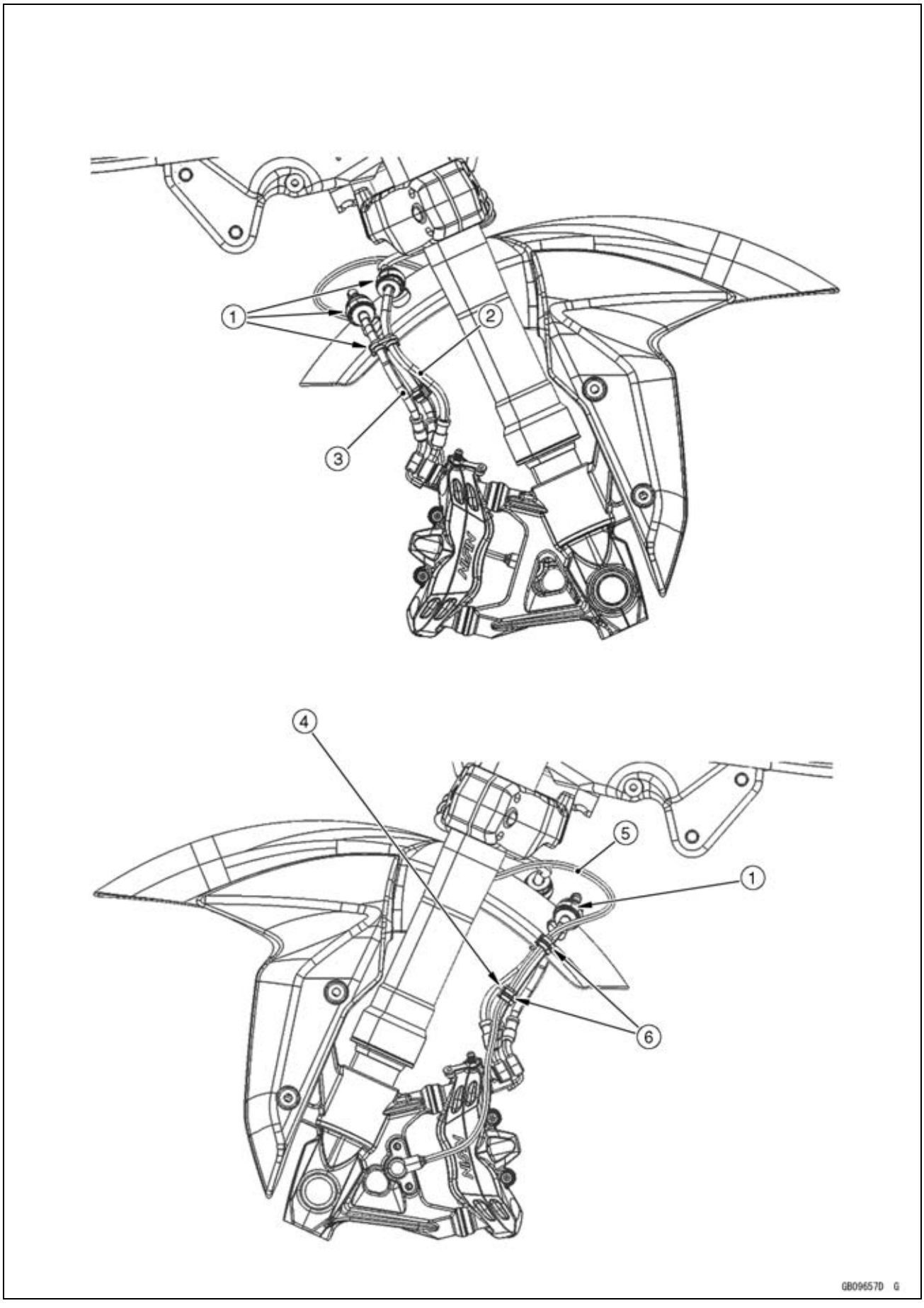

Cable, Wire, and Hose Routing

1. Clamps
2. Brake Hose (From ABS Hydraulic Unit to Right Front Caliper)
3. Brake Hose (From Right Front Caliper to Left Front Caliper)
4. Clamp (Hold the brake hose (from right front caliper to left front caliper) and front wheel rotation sensor lead on the white tape.)
5. Front Wheel Rotation Sensor Lead
6. Clamp (Hold the brake hose (from right front caliper to left front caliper) and front wheel rotation sensor lead so that the front wheel rotation sensor lead is outside.)

Cable, Wire, and Hose Routing

ABS Equipped Models

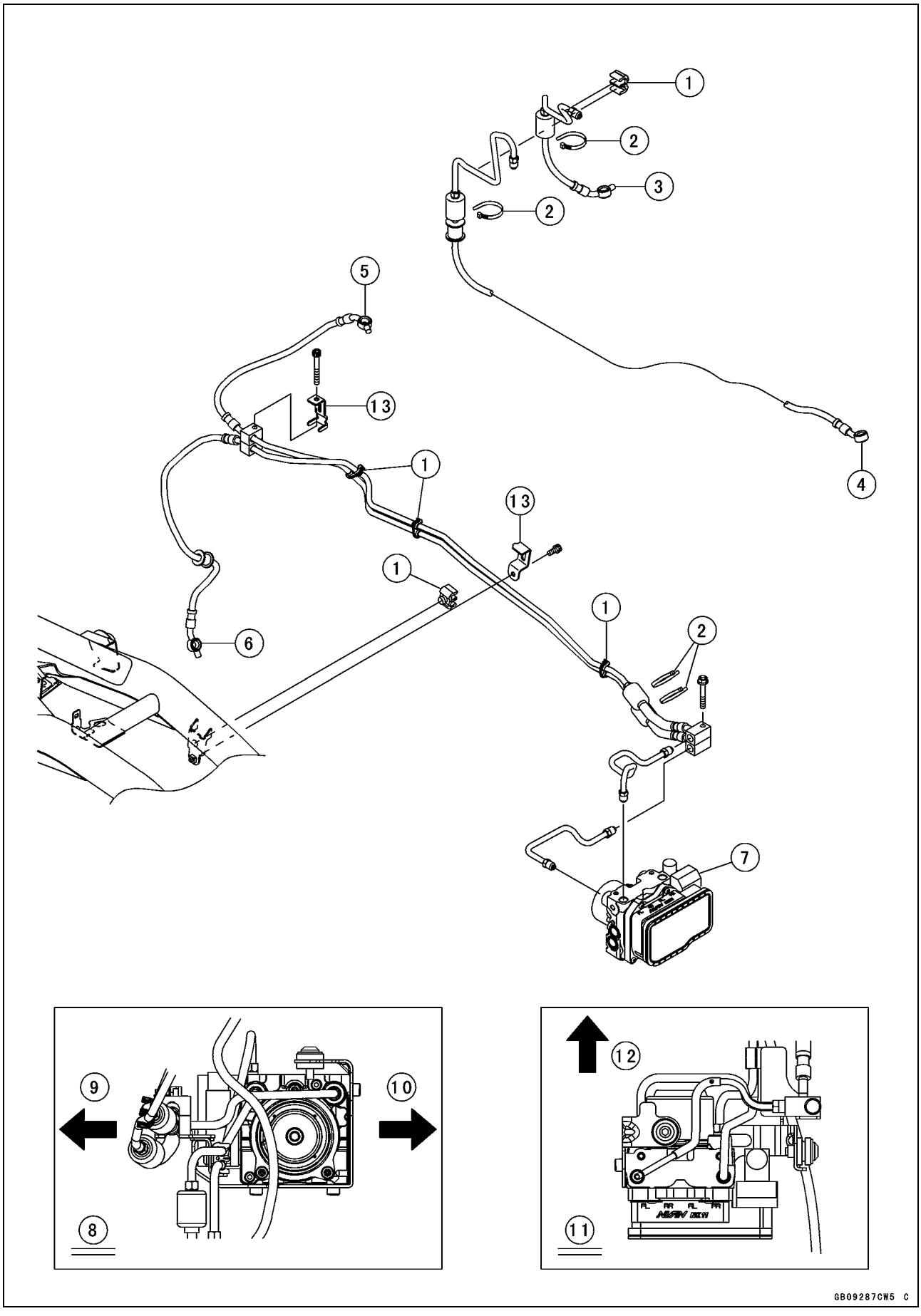

Cable, Wire, and Hose Routing

1. Clamps
2. Bands
3. To Rear Master Cylinder
4. To Rear Caliper
5. To Front Master Cylinder
6. To Right Front Caliper
7. ABS Hydraulic Unit
8. Viewed Front Side
9. Left Side
10. Right Side
11. Viewed Upper Side
12. Front
13. Brackets

Cable, Wire, and Hose Routing

ABS Equipped Models

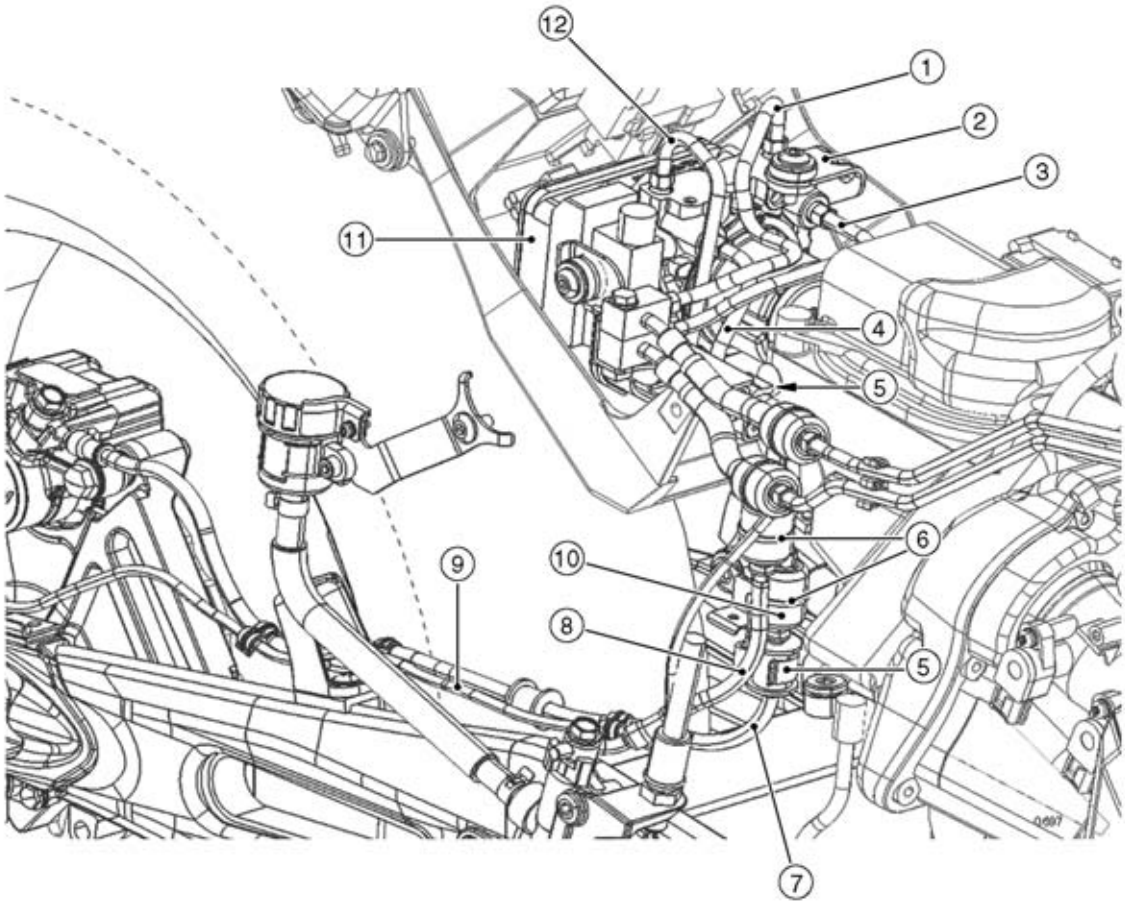

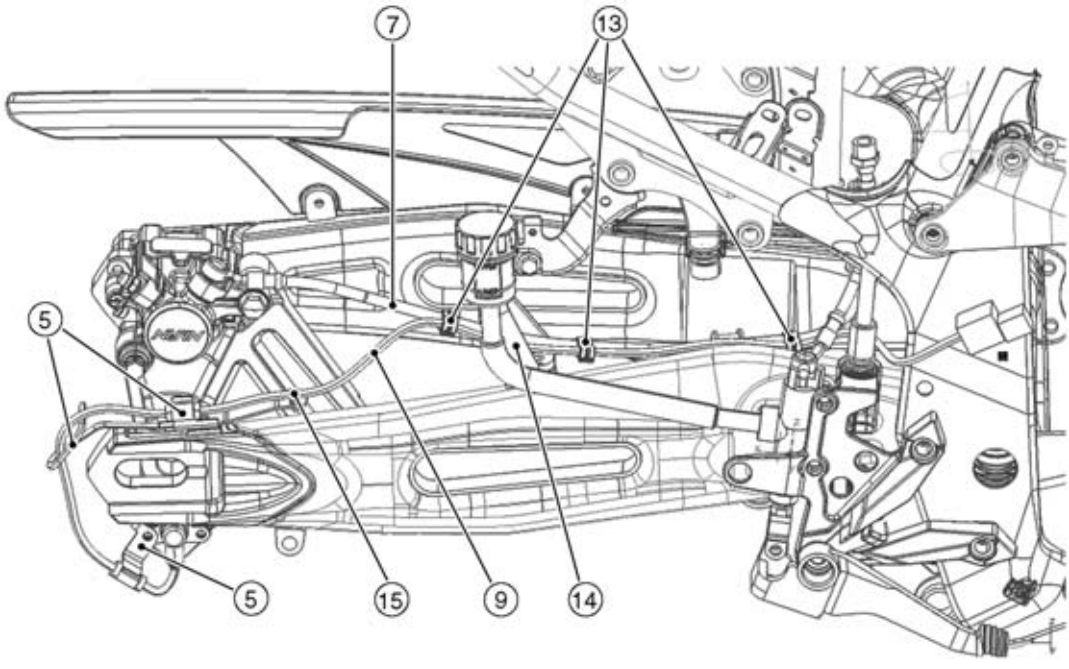

GB09660D G

Cable, Wire, and Hose Routing

1. Brake Pipe (One Blue Spot Paint Mark)
2. Bracket
3. Brake Pipe (One White Spot Paint Mark)
4. Brake Pipe (Two White Spot Paint Mark)
5. Clamps
6. Bands
7. Brake Hose (Two Blue Spot Paint Mark)
8. Brake Hose (Two White Spot Paint Mark)
9. Rear Wheel Rotation Sensor Lead
10. Grommets
11. ABS Hydraulic Unit
12. Brake Pipe (Two Blue Spot Paint Mark)
13. Clamps (Hold the brake hose (ABS hydraulic unit to rear caliper) and rear wheel rotation sensor lead on the white tape.)
14. Clamp (Run the rear wheel rotation sensor lead through inside of the clamp.)
15. Insert the upper clamp in the lower clamp.

Cable, Wire, and Hose Routing

ABS Equipped Models

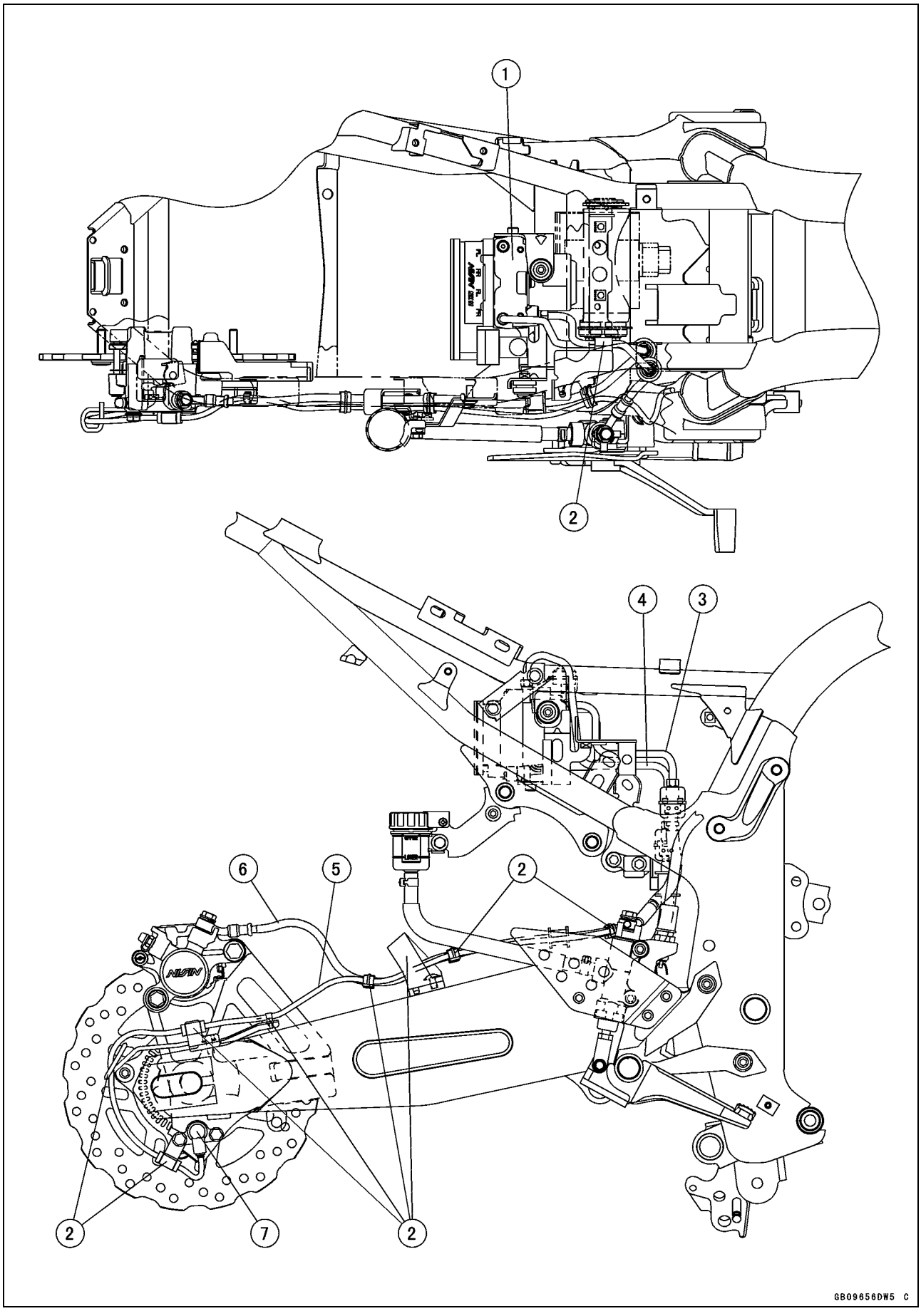

Cable, Wire, and Hose Routing

1. ABS Hydraulic Unit
2. Clamps
3. Two White Spot Paint Mark
4. Two Blue Spot Paint Mark
5. Rear Wheel Rotation Sensor Lead
6. Brake Hose (From ABS Hydraulic Unit to Rear Caliper)
7. Rear Wheel Rotation Sensor

Cable, Wire, and Hose Routing

ABS Equipped Models

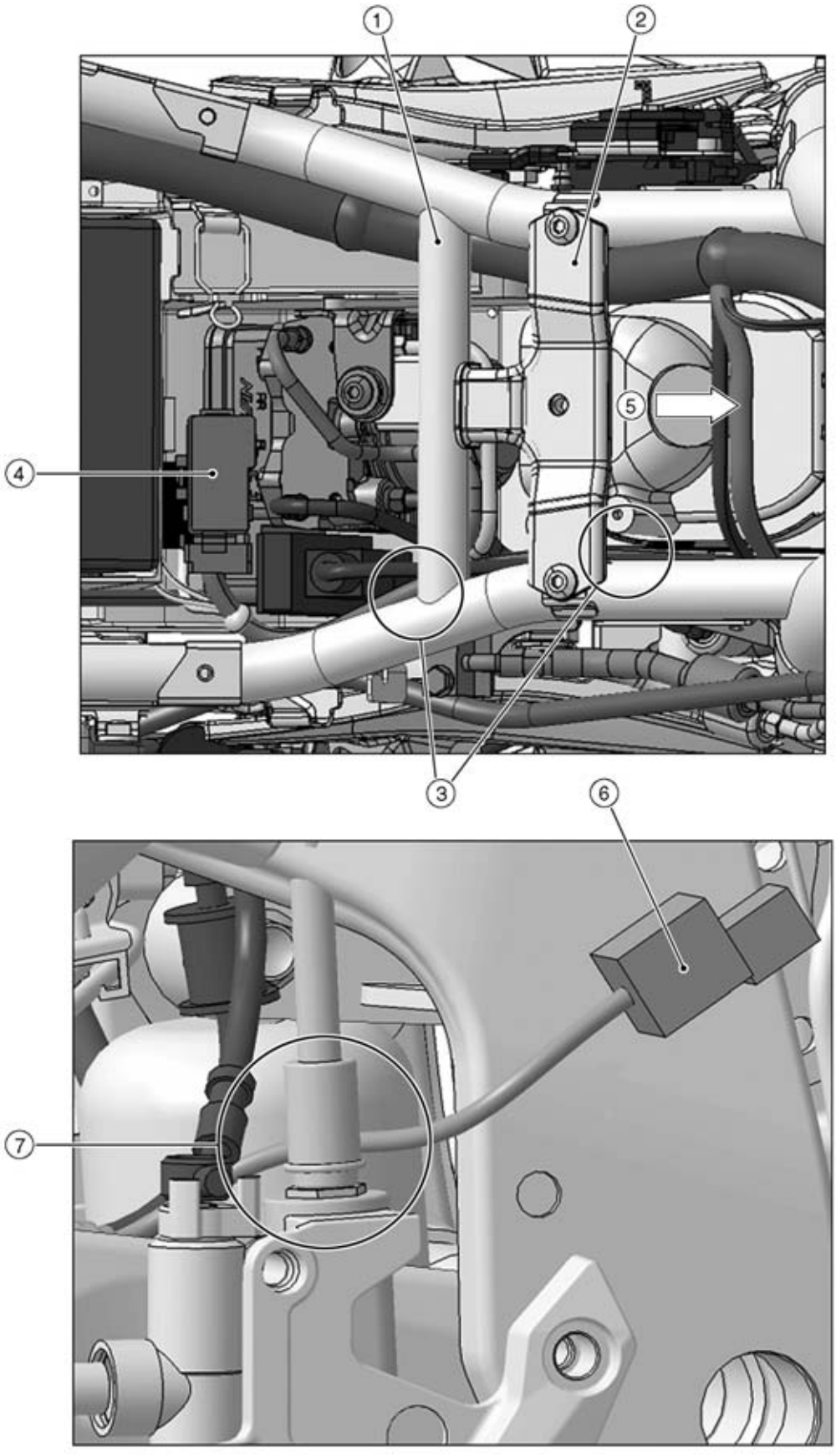

Cable, Wire, and Hose Routing

1. Frame Cross Pipe
2. Fuel Tank Bracket
3. Run the ABS hydraulic unit lead and main harness (to fuse box 1) under the fuel tank bracket and frame cross pipe.
4. Fuse Box 1
5. Front
6. Rear Wheel Rotation Sensor Connector
7. Run the rear wheel rotation sensor lead inside of the rear brake switch.

Troubleshooting Guide

NOTE

○*Refer to the Fuel System chapter for most of DFI trouble shooting guide.*

○*This is not an exhaustive list, giving every possible cause for each problem listed. It is meant simply as a rough guide to assist the troubleshooting for some of the more common difficulties.*

Engine Doesn't Start, Starting Difficulty:

Starter motor not rotating:
- Ignition and engine stop switch not ON
- Starter lockout switch or neutral switch trouble
- Starter motor trouble
- Battery voltage low
- Starter relay not contacting or operating
- Starter button not contacting
- Starter system wiring shorted or open
- Ignition switch trouble
- Engine stop switch trouble
- Main 30 A or ignition fuse blown

Starter motor rotating but engine doesn't turn over:
- Vehicle-down sensor (DFI) coming off
- Immobilizer system trouble
- Starter clutch trouble
- Starter idle gear trouble

Engine won't turn over:
- Valve seizure
- Valve lifter seizure
- Cylinder, piston seizure
- Crankshaft seizure
- Connecting rod small end seizure
- Connecting rod big end seizure
- Transmission gear or bearing seizure
- Camshaft seizure
- Starter idle gear seizure
- Balancer bearing seizure

No fuel flow:
- No fuel in tank
- Fuel pump trouble
- Fuel tank air vent obstructed
- Fuel filter clogged
- Fuel line clogged

No spark; spark weak:
- Vehicle-down sensor (DFI) coming off
- Ignition switch not ON
- Engine stop switch turned OFF
- Clutch lever not pulled in or gear not in neutral
- Battery voltage low
- Immobilizer system trouble
- Spark plug dirty, broken, or gap maladjusted
- Spark plug incorrect
- Stick coil shorted or not in good contact
- Stick coil trouble
- ECU trouble
- Camshaft position sensor trouble
- Neutral, starter lockout, or sidestand switch trouble
- Crankshaft sensor trouble
- Ignition switch or engine stop switch shorted
- Starter system wiring shorted or open
- Main 30 A or ignition fuse blown

Fuel/air mixture incorrect:
- Bypass screw and/or idle adjusting screw maladjusted
- Air passage clogged
- Air cleaner clogged, poorly sealed, or missing
- Leak from oil filler cap, crankcase breather hose or air cleaner drain hose.

Compression Low:
- Spark plug loose
- Cylinder head not sufficiently tightened down
- Cylinder, piston worn
- Piston ring bad (worn, weak, broken, or sticking)
- Piston ring/groove clearance excessive
- Cylinder head gasket damaged
- Cylinder head warped
- Valve spring broken or weak
- No valve clearance
- Valve not seating properly (valve bent, worn, or carbon accumulation on the seating surface)

Poor Running at Low Speed:

Spark weak:
- Battery voltage low
- Immobilizer system trouble
- Stick coil trouble
- Stick coil shorted or not in good contact
- Spark plug dirty, broken, or maladjusted
- Spark plug incorrect
- ECU trouble
- Camshaft position sensor trouble
- Crankshaft sensor trouble

Fuel/air mixture incorrect:
- Bypass screw maladjusted
- Air passage clogged
- Air bleed pipe bleed holes clogged
- Pilot passage clogged
- Air cleaner clogged, poorly sealed, or missing
- Fuel tank air vent obstructed
- Fuel pump trouble
- Throttle body assy holder loose
- Air cleaner duct loose

Troubleshooting Guide

Compression low:
- Spark plug loose
- Cylinder head not sufficiently tightened down
- No valve clearance
- Cylinder, piston worn
- Piston ring bad (worn, weak, broken, or sticking)
- Piston ring/groove clearance excessive
- Cylinder head gasket damaged
- Cylinder head warped
- Valve spring broken or weak
- Valve not seating properly (valve bent, worn, or carbon accumulation on the seating surface)
- Camshaft cam worm

Run-on (dieseling):
- Ignition switch trouble
- Engine stop switch trouble
- Fuel injector trouble
- Loosen terminal of battery (–) cable or ECU ground lead
- Carbon accumulating on valve seating surface
- Engine overheating

Other:
- ECU trouble
- Throttle body assy not synchronizing
- Engine oil viscosity too high
- Drive train trouble
- Brake dragging
- Clutch slipping
- Engine overheating
- Air suction valve trouble
- Air switching valve trouble

Poor Running or No Power at High Speed:

Firing incorrect:
- Spark plug dirty, broken, or maladjusted
- Spark plug incorrect
- Stick coil shorted or not in good contact trouble
- Stick coil trouble
- ECU trouble

Fuel/air mixture incorrect:
- Air cleaner clogged, poorly sealed, or missing
- Air cleaner duct loose
- Water or foreign matter in fuel
- Throttle body assy holder loose
- Fuel to injector insufficient
- Fuel tank air vent obstructed
- Fuel line clogged
- Fuel pump trouble

Compression low:
- Spark plug loose
- Cylinder head not sufficiently tightened down
- No valve clearance
- Cylinder, piston worn
- Piston ring bad (worn, weak, broken, or sticking)
- Piston ring/groove clearance excessive
- Cylinder head gasket damaged
- Cylinder head warped
- Valve spring broken or weak
- Valve not seating properly (valve bent, worn, or carbon accumulation on the seating surface.)

Knocking:
- Carbon built up in combustion chamber
- Fuel poor quality or incorrect
- Spark plug incorrect
- ECU trouble

Miscellaneous:
- Throttle valve won't fully open
- Brake dragging
- Clutch slipping
- Engine overheating
- Engine oil level too high
- Engine oil viscosity too high
- Drive train trouble
- Camshaft cam worm
- Air suction valve trouble
- Air switching valve trouble
- Catalytic converter melt down due to muffler overheating (KLEEN)

Overheating:

Firing incorrect:
- Spark plug dirty, broken, or maladjusted
- Spark plug incorrect
- ECU trouble

Muffler overheating:
- For KLEEN, do not run the engine even if with only one cylinder misfiring or poor running (Request the nearest service facility to correct it)
- For KLEEN, do not push-start with a dead battery (Connect another full-charged battery with jumper cables, and start the engine using the electric starter)
- For KLEEN, do not start the engine under misfire due to spark plug fouling or poor connection of the stick coil
- For KLEEN, do not coast the motorcycle with the ignition switch off (Turn the ignition switch ON and run the engine)
- ECU trouble

Fuel/air mixture incorrect:
- Throttle body assy holder loose
- Air cleaner duct loose
- Air cleaner poorly sealed, or missing

Air cleaner clogged
Compression high:
Carbon built up in combustion chamber
Engine load faulty:
Clutch slipping
Engine oil level too high
Engine oil viscosity too high
Drive train trouble
Brake dragging
Lubrication inadequate:
Engine oil level too low
Engine oil poor quality or incorrect
Gauge incorrect:
Water temperature gauge broken
Water temperature sensor broken
Coolant incorrect:
Coolant level too low
Coolant deteriorated
Wrong coolant mixed ratio
Cooling system component incorrect:
Radiator fin damaged
Radiator clogged
Thermostat trouble
Radiator cap trouble
Radiator fan relay trouble
Fan motor broken
Fan blade damaged
Water pump not turning
Water pump impeller damaged

Over Cooling:
Gauge incorrect:
Water temperature gauge broken
Water temperature sensor broken
Cooling system component incorrect:
Thermostat trouble

Clutch Operation Faulty:
Clutch slipping:
Friction plate worn or warped
Steel plate worn or warped
Clutch spring broken or weak
Clutch hub or housing unevenly worn
No clutch lever play
Clutch inner cable trouble
Clutch release mechanism trouble
Clutch not disengaging properly:
Clutch plate warped or too rough
Clutch spring compression uneven
Engine oil deteriorated
Engine oil viscosity too high
Engine oil level too high
Clutch housing frozen on drive shaft
Clutch hub nut loose
Clutch hub spline damaged
Clutch friction plate installed wrong
Clutch lever play excessive
Clutch release mechanism trouble

Gear Shifting Faulty:
Doesn't go into gear; shift pedal doesn't return:
Clutch not disengaging
Shift fork bent or seized
Gear stuck on the shaft
Gear positioning lever binding
Shift return spring weak or broken
Shift return spring pin loose
Shift mechanism arm spring broken
Shift mechanism arm broken
Shift pawl broken
Jumps out of gear:
Shift fork ear worn, bent
Gear groove worn
Gear dogs and/or dog holes worn
Shift drum groove worn
Gear positioning lever spring weak or broken
Shift fork guide pin worn
Drive shaft, output shaft, and/or gear splines worn
Overshifts:
Gear positioning lever spring weak or broken
Shift mechanism arm spring broken

Abnormal Engine Noise:
Knocking:
ECU trouble
Carbon built up in combustion chamber
Fuel poor quality or incorrect
Spark plug incorrect
Overheating
Piston slap:
Cylinder/piston clearance excessive
Cylinder, piston worn
Connecting rod bent
Piston pin, piston pin hole worn
Valve noise:
Valve clearance incorrect
Valve spring broken or weak
Camshaft bearing worn
Valve lifter worn
Other noise:
Connecting rod small end clearance excessive
Connecting rod big end clearance excessive
Piston ring/groove clearance excessive
Piston ring worn, broken, or stuck
Piston ring groove worn
Piston seizure, damage
Cylinder head gasket leaking

Exhaust pipe leaking at cylinder head connection
Crankshaft runout excessive
Engine mount loose
Crankshaft bearing worn
Primary gear worn or chipped
Camshaft chain tensioner trouble
Camshaft chain, sprocket, guide worn
Air suction valve damaged
Air switching valve damaged
Alternator rotor loose
Catalytic converter melt down due to muffler overheating (KLEEN)
Exhaust butterfly valve cable loose

Abnormal Drive Train Noise:

Clutch noise:
Clutch damper weak or damaged
Clutch housing/friction plate clearance excessive
Clutch housing gear worn
Wrong installation of outside friction plate

Transmission noise:
Bearings worn
Transmission gear worn or chipped
Metal chips jammed in gear teeth
Engine oil insufficient

Drive line noise:
Drive chain adjusted improperly
Drive chain worn
Rear and/or engine sprocket worn
Chain lubrication insufficient
Rear wheel misaligned

Abnormal Frame Noise:

Front fork noise:
Oil insufficient or too thin
Spring weak or broken

Rear shock absorber noise:
Shock absorber damaged

Disc brake noise:
Pad installed incorrectly
Pad surface glazed
Disc warped
Caliper trouble

Other noise:
Bracket, nut, bolt, etc. not properly mounted or tightened

Oil Pressure Warning Light Goes On:

Engine oil pump damaged
Engine oil screen clogged
Engine oil filter clogged
Engine oil level too low
Engine oil viscosity too low
Camshaft bearing worn
Crankshaft bearing worn
Oil pressure switch damaged
Wiring faulty
Relief valve stuck open
O-ring at the oil passage in the crankcase damaged

Exhaust Smokes Excessively:

White smoke:
Piston oil ring worn
Cylinder worn
Valve oil seal damaged
Valve guide worn
Engine oil level too high

Black smoke:
Air cleaner clogged

Brown smoke:
Air cleaner duct loose
Air cleaner poorly sealed or missing

Handling and/or Stability Unsatisfactory:

Handlebar hard to turn:
Cable routing incorrect
Hose routing incorrect
Wiring routing incorrect
Steering stem nut too tight
Steering stem bearing damaged
Steering stem bearing lubrication inadequate
Steering stem bent
Tire air pressure too low

Handlebar shakes or excessively vibrates:
Tire worn
Swingarm pivot bearing worn
Rim warped, or not balanced
Wheel bearing worn
Handlebar holder bolt loose
Steering stem nut loose
Front, rear axle runout excessive
Engine mounting bolt loose

Handlebar pulls to one side:
Frame bent
Wheel misalignment
Swingarm bent or twisted
Swingarm pivot shaft runout excessive
Steering maladjusted
Front fork bent
Right and left front fork oil level uneven

Shock absorption unsatisfactory:
(Too hard)
Front fork oil excessive
Front fork oil viscosity too high
Rear shock absorber adjustment too hard
Tire air pressure too high
Front fork bent
(Too soft)

Tire air pressure too low
Front fork oil insufficient and/or leaking
Front fork oil viscosity too low
Rear shock adjustment too soft
Front fork, rear shock absorber spring weak
Rear shock absorber oil leaking

Brake Doesn't Hold:

Air in the brake line
Pad or disc worn
Brake fluid leakage
Disc warped
Contaminated pad
Brake fluid deteriorated
Primary or secondary cup damaged in master cylinder
Master cylinder scratched inside

Battery Trouble:

Battery discharged:
Charge insufficient
Battery faulty (too low terminal voltage)
Battery cable making poor contact
Load excessive (e.g., bulb of excessive wattage)
Ignition switch trouble
Alternator trouble
Wiring faulty
Regulator/rectifier trouble

Battery overcharged:
Alternator trouble
Regulator/rectifier trouble
Battery faulty

MODEL APPLICATION

Year	Model	Beginning Frame No.
2011	ZR750NB	JKAZR750NNA000001
2011	ZR750PB	JKAZR750NPA000001
2012	ZR750NC	JKAZR750NNA009001
2012	ZR750PC	JKAZR750NPA009001

□:This digit in the frame number changes from one machine to another.

Kawasaki
KAWASAKI HEAVY INDUSTRIES, LTD.
Motorcycle & Engine Company
Part No.99924-1440-02
Printed in Japan