Kawasaki

Ninja 650
Ninja 650 ABS
ER-6f
ER-6f ABS

Motorcycle Service Manual

Quick Reference Guide

General Information	1
Periodic Maintenance	2
Fuel System (DFI)	3
Cooling System	4
Engine Top End	5
Clutch	6
Engine Lubrication System	7
Engine Removal/Installation	8
Crankshaft/Transmission	9
Wheels/Tires	10
Final Drive	11
Brakes	12
Suspension	13
Steering	14
Frame	15
Electrical System	16
Appendix	17

This quick reference guide will assist you in locating a desired topic or procedure.

- Bend the pages back to match the black tab of the desired chapter number with the black tab on the edge at each table of contents page.
- Refer to the sectional table of contents for the exact pages to locate the specific topic required.

Kawasaki

Ninja 650
Ninja 650 ABS
ER-6f
ER-6f ABS

Motorcycle Service Manual

All rights reserved. No parts of this publication may be reproduced, stored in a retrieval system, or transmitted in any form or by any means, electronic mechanical photocopying, recording or otherwise, without the prior written permission of Quality Assurance Division/Motorcycle & Engine Company/Kawasaki Heavy Industries, Ltd., Japan.

No liability can be accepted for any inaccuracies or omissions in this publication, although every possible care has been taken to make it as complete and accurate as possible.

The right is reserved to make changes at any time without prior notice and without incurring an obligation to make such changes to products manufactured previously. See your Motorcycle dealer for the latest information on product improvements incorporated after this publication.

All information contained in this publication is based on the latest product information available at the time of publication. Illustrations and photographs in this publication are intended for reference use only and may not depict actual model component parts.

© 2011 Kawasaki Heavy Industries, Ltd.

1st Edition (1) : Sep. 22, 2011

LIST OF ABBREVIATIONS

A	ampere(s)	KDS	Kawasaki Diagnostic System
ABDC	after bottom dead center	km/h	kilometers per hour
AC	alternating current	L	liter(s)
Ah	ampere hour	lb	pound(s)
ATDC	after top dead center	LCD	Liquid Crystal Display
BBDC	before bottom dead center	LED	Light Emitting Diode
BDC	bottom dead center	m	meter(s)
BTDC	before top dead center	min	minute(s)
°C	degree(s) Celsius	mph	miles per hour
cmHg	centimeters of mercury	N	newton(s)
cu in	Cubic inch(s)	oz	ounce(s)
DC	direct current	Pa	pascal(s)
DFI	Digital Fuel Injection	PS	horsepower
ECU	Electronic Control Unit	psi	pound(s) per square inch
°F	degree(s) Fahrenheit	qt	quart(s)
ft	foot, feet	r	revolution
g	gram(s)	rpm	revolution(s) perminute
gal	gallon(s)	TDC	top dead center
h	hour(s)	TIR	total indicator reading
HP	horsepower(s)	V	volt(s)
IC	Integrated Circuit	W	watt(s)
in.	inch(s)	Ω	ohm(s)

COUNTRY AND AREA CODES

AT	Austria	ID	Indonesia
AU	Australia	IN	India
AU LAMS	Australia Leaner Approved Motorcycle Scheme model	PH	Philippines
BR	Brazil	SEA-B1	Southeast Asia B1 (with Evaporative Emission Control System)
CA	Canada	SEA-B2	Southeast Asia B2
CAL	California	TH	Thailand
CH	Switzerland	US	United States
DE	Germany	WVTA	Whole Vehicle Type Approval
EUR	Europe	WVTA (FULL H)	WVTA Model with Honeycomb Catalytic Converter (Full Power)
GB	United Kingdom	GB WVTA (FULL H)	WVTA Model with Honeycomb Catalytic Converter (Left Side Traffic, Full Power)

EMISSION CONTROL INFORMATION

To protect the environment in which we all live, Kawasaki has incorporated crankcase emission (1) and exhaust emission (2) control systems in compliance with applicable regulations of the United States Environmental Protection Agency and California Air Resources Board. Additionally, Kawasaki has incorporated an evaporative emission control system (3) in compliance with applicable regulations of the California Air Resources Board on vehicles sold in California only.

1. Crankcase Emission Control System

This system eliminates the release of crankcase vapors into the atmosphere. Instead, the vapors are routed through an oil separator to the intake side of the engine. While the engine is operating, the vapors are drawn into combustion chamber, where they are burned along with the fuel and air supplied by the fuel injection system.

2. Exhaust Emission Control System

This system reduces the amount of pollutants discharged into the atmosphere by the exhaust of this motorcycle. The fuel, ignition, and exhaust systems of this motorcycle have been carefully designed and constructed to ensure an efficient engine with low exhaust pollutant levels.

The exhaust system of this model motorcycle manufactured primarily for sale in California includes a catalytic converter system.

3. Evaporative Emission Control System

Vapors caused by fuel evaporation in the fuel system are not vented into the atmosphere. Instead, fuel vapors are routed into the running engine to be burned, or stored in a canister when the engine is stopped.

The Clean Air Act, which is the Federal law covering motor vehicle pollution, contains what is commonly referred to as the Act's "tampering provisions".

"Sec. 203(a) The following acts and the causing thereof are prohibited.

(3)(A) for any person to remove or render inoperative any device or element of design installed on or in a motor vehicle or motor vehicle engine in compliance with regulations under this title prior to its sale and delivery to the ultimate purchaser, or for any manufacturer or dealer knowingly to remove or render inoperative any such device or element of design after such sale and delivery to the ultimate purchaser.

(3)(B) for any person engaged in the business of repairing, servicing, selling, leasing, or trading motor vehicles or motor vehicle engines, or who operates a fleet of motor vehicles knowingly to remove or render inoperative any device or element of design installed on or in a motor vehicle or motor vehicle engine in compliance with regulations under this title following its sale and delivery to the ultimate purchaser..."

NOTE

○*The phrase "remove or render inoperative any device or element of design" has been generally interpreted as follows.*

1. *Tampering does not include the temporary removal or rendering inoperative of devices or elements of design in order to perform maintenance.*
2. *Tampering could include.*
   a. *Maladjustment of vehicle components such that the emission standards are exceeded.*
   b. *Use of replacement parts or accessories which adversely affect the performance or durability of the motorcycle.*
   c. *Addition of components or accessories that result in the vehicle exceeding the standards.*
   d. *Permanently removing, disconnecting, or rendering inoperative any component or element of design of the emission control systems.*

WE RECOMMEND THAT ALL DEALERS OBSERVE THESE PROVISIONS OF FEDERAL LAW, THE VIOLATION OF WHICH IS PUNISHABLE BY CIVIL PENALTIES NOT EXCEEDING $10 000 PER VIOLATION.

TAMPERING WITH NOISE CONTROL SYSTEM PROHIBITED

Federal law prohibits the following acts or the causing thereof. (1) The removal or rendering inoperative by any person other than for purposes of maintenance, repair, or replacement, of any device or element of design incorporated into any new vehicle for the purpose of noise control prior to its sale or delivery to the ultimate purchaser or while it is in use, or (2) the use of the vehicle after such device or element of design has been removed or rendered inoperative by any person.

Among those acts presumed to constitute tampering are the acts listed below.

- Replacement of the original exhaust system or muffler with a component not in compliance with Federal regulations.
- Removal of the muffler(s) or any internal portion of the muffler(s).
- Removal of the air box or air box cover.
- Modifications to the muffler(s) or air intake system by cutting, drilling, or other means if such modifications result in increased noise levels.

Foreword

This manual is designed primarily for use by trained mechanics in a properly equipped shop. However, it contains enough detail and basic information to make it useful to the owner who desires to perform his own basic maintenance and repair work. A basic knowledge of mechanics, the proper use of tools, and workshop procedures must be understood in order to carry out maintenance and repair satisfactorily. Whenever the owner has insufficient experience or doubts his ability to do the work, all adjustments, maintenance, and repair should be carried out only by qualified mechanics.

In order to perform the work efficiently and to avoid costly mistakes, read the text, thoroughly familiarize yourself with the procedures before starting work, and then do the work carefully in a clean area. Whenever special tools or equipment are specified, do not use makeshift tools or equipment. Precision measurements can only be made if the proper instruments are used, and the use of substitute tools may adversely affect safe operation.

For the duration of the warranty period, we recommend that all repairs and scheduled maintenance be performed in accordance with this service manual. Any owner maintenance or repair procedure not performed in accordance with this manual may void the warranty.

To get the longest life out of your vehicle.

- Follow the Periodic Maintenance Chart in the Service Manual.
- Be alert for problems and non-scheduled maintenance.
- Use proper tools and genuine Kawasaki Motorcycle parts. Special tools, gauges, and testers that are necessary when servicing Kawasaki motorcycles are introduced by the Service Manual. Genuine parts provided as spare parts are listed in the Parts Catalog.
- Follow the procedures in this manual carefully. Don't take shortcuts.
- Remember to keep complete records of maintenance and repair with dates and any new parts installed.

How to Use This Manual

In this manual, the product is divided into its major systems and these systems make up the manual's chapters. The Quick Reference Guide shows you all of the product's system and assists in locating their chapters. Each chapter in turn has its own comprehensive Table of Contents.

For example, if you want ignition coil information, use the Quick Reference Guide to locate the Electrical System chapter. Then, use the Table of Contents on the first page of the chapter to find the Ignition Coil section.

Whenever you see symbols, heed their instructions! Always follow safe operating and maintenance practices.

⚠ DANGER

DANGER indicates a hazardous situation which, if not avoided, will result in death or serious injury.

⚠ WARNING

WARNING indicates a hazardous situation which, if not avoided, could result in death or serious injury.

NOTICE

NOTICE is used to address practices not related to personal injury.

This manual contains four more symbols which will help you distinguish different types of information.

NOTE

○*This note symbol indicates points of particular interest for more efficient and convenient operation.*

- ● Indicates a procedural step or work to be done.
- ○ Indicates a procedural sub-step or how to do the work of the procedural step it follows. It also precedes the text of a NOTE.
- ★ Indicates a conditional step or what action to take based on the results of the test or inspection in the procedural step or sub-step it follows.

In most chapters an exploded view illustration of the system components follows the Table of Contents. In these illustrations you will find the instructions indicating which parts require specified tightening torque, oil, grease or a locking agent during assembly.

General Information

Table of Contents

Before Servicing 1-2
Model Identification..... 1-7
General Specifications..... 1-10
Unit Conversion Table 1-13

Before Servicing

Before starting to perform an inspection service or carry out a disassembly and reassembly operation on a motorcycle, read the precautions given below. To facilitate actual operations, notes, illustrations, photographs, cautions, and detailed descriptions have been included in each chapter wherever necessary. This section explains the items that require particular attention during the removal and reinstallation or disassembly and reassembly of general parts.

Especially note the following:

Battery Ground

Before completing any service on the motorcycle, disconnect the battery cables from the battery to prevent the engine from accidentally turning over. Disconnect the ground cable (–) first and then the positive (+). When completed with the service, first connect the positive (+) cable to the positive (+) terminal of the battery then the negative (–) cable to the negative terminal.

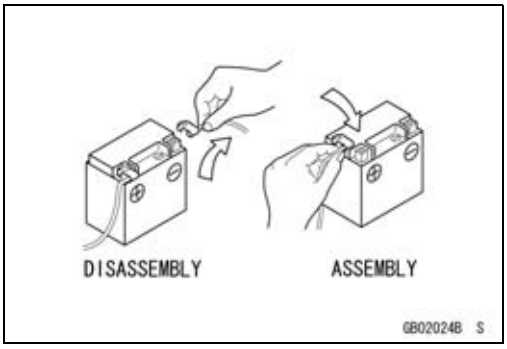

Edges of Parts

Lift large or heavy parts wearing gloves to prevent injury from possible sharp edges on the parts.

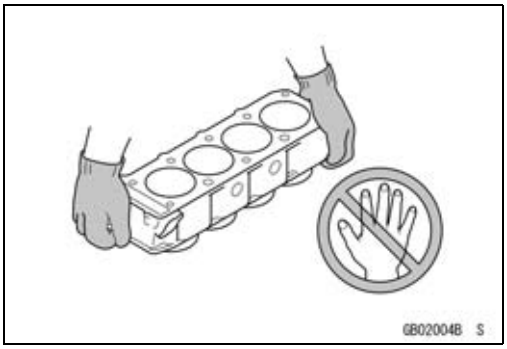

Solvent

Use a high flash-point solvent when cleaning parts. High flash-point solvent should be used according to directions of the solvent manufacturer.

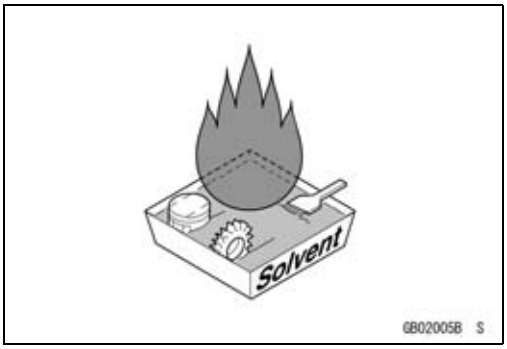

Cleaning Vehicle before Disassembly

Clean the vehicle thoroughly before disassembly. Dirt or other foreign materials entering into sealed areas during vehicle disassembly can cause excessive wear and decrease performance of the vehicle.

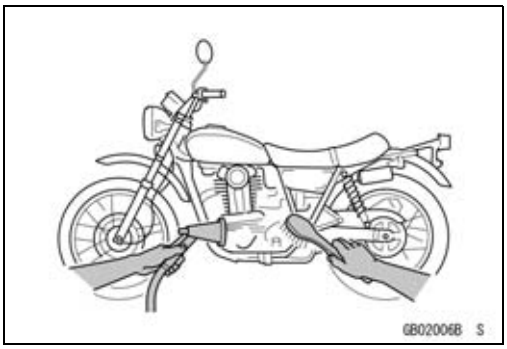

Before Servicing

Arrangement and Cleaning of Removed Parts

Disassembled parts are easy to confuse. Arrange the parts according to the order the parts were disassembled and clean the parts in order prior to assembly.

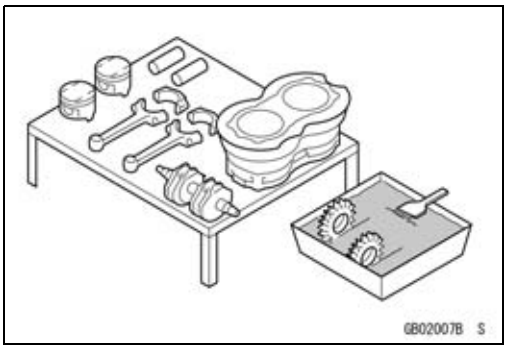

Storage of Removed Parts

After all the parts including subassembly parts have been cleaned, store the parts in a clean area. Put a clean cloth or plastic sheet over the parts to protect from any foreign materials that may collect before re-assembly.

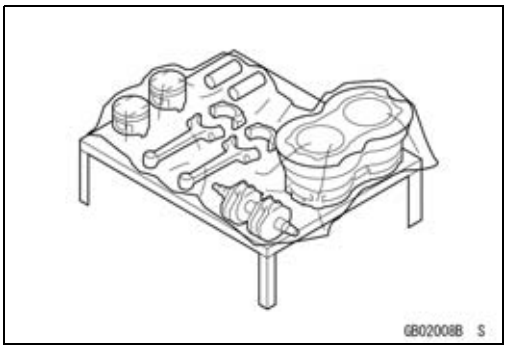

Inspection

Reuse of worn or damaged parts may lead to serious accident. Visually inspect removed parts for corrosion, discoloration, or other damage. Refer to the appropriate sections of this manual for service limits on individual parts. Replace the parts if any damage has been found or if the part is beyond its service limit.

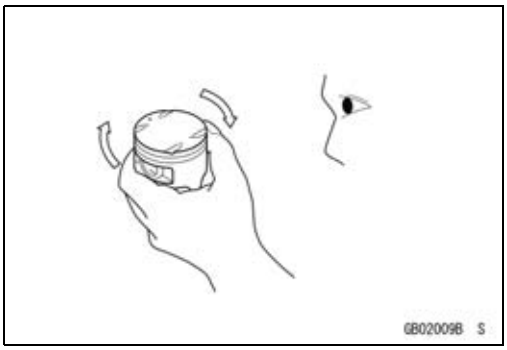

Replacement Parts

Replacement parts must be KAWASAKI genuine or recommended by KAWASAKI. Gaskets, O-rings, oil seals, grease seals, circlips, cotter pins or self-locking nuts must be replaced with new ones whenever disassembled.

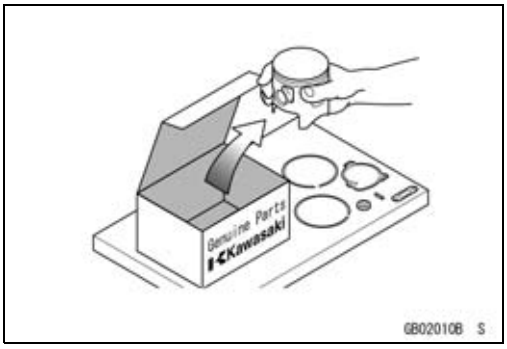

Assembly Order

In most cases assembly order is the reverse of disassembly, however, if assembly order is provided in this Service Manual, follow the procedures given.

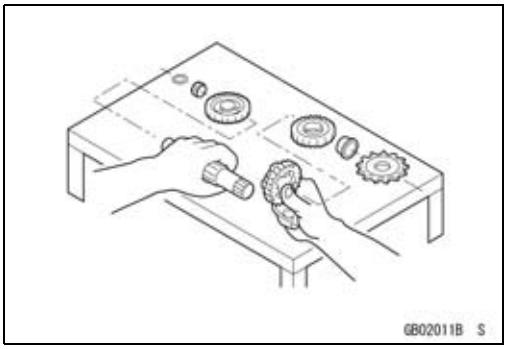

Before Servicing

Tightening Sequence

Generally, when installing a part with several bolts, nuts, or screws, start them all in their holes and tighten them to a snug fit. Then tighten them according to the specified sequence to prevent case warpage or deformation which can lead to malfunction. Conversely when loosening the bolts, nuts, or screws, first loosen all of them by about a quarter turn and then remove them. If the specified tightening sequence is not indicated, tighten the fasteners alternating diagonally.

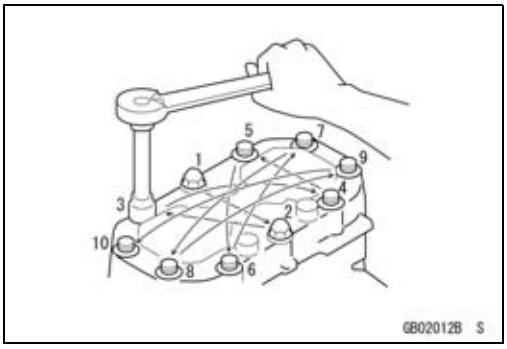

Tightening Torque

Incorrect torque applied to a bolt, nut, or screw may lead to serious damage. Tighten fasteners to the specified torque using a good quality torque wrench. Often, the tightening sequence is followed twice-initial tightening and final tightening with torque wrench.

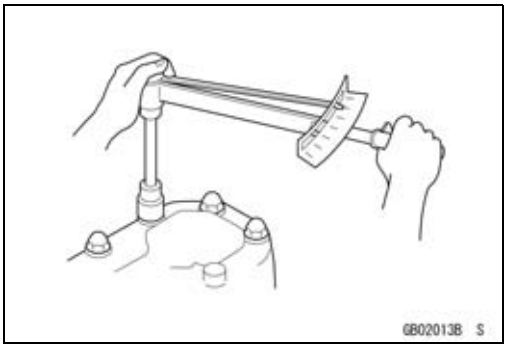

Force

Use common sense during disassembly and assembly, excessive force can cause expensive or hard to repair damage. When necessary, remove screws that have a non-permanent locking agent applied using an impact driver. Use a plastic-faced mallet whenever tapping is necessary.

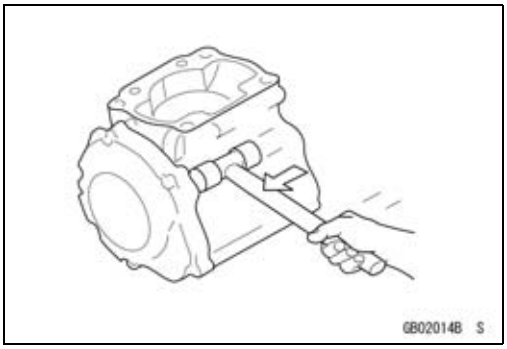

Gasket, O-ring

Hardening, shrinkage, or damage of both gaskets and O-rings after disassembly can reduce sealing performance. Remove old gaskets and clean the sealing surfaces thoroughly so that no gasket material or other material remains. Install new gaskets and replace used O-rings when re-assembling

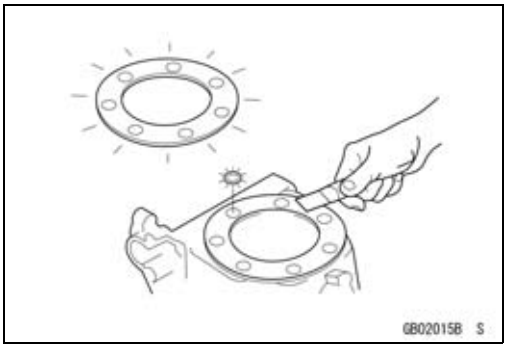

Liquid Gasket, Non-permanent Locking Agent

For applications that require Liquid Gasket or a Non-permanent Locking Agent, clean the surfaces so that no oil residue remains before applying liquid gasket or non-permanent locking agent. Do not apply them excessively. Excessive application can clog oil passages and cause serious damage.

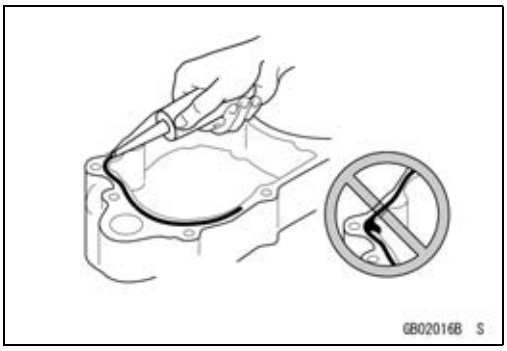

Before Servicing

Press

For items such as bearings or oil seals that must be pressed into place, apply small amount of oil to the contact area. Be sure to maintain proper alignment and use smooth movements when installing.

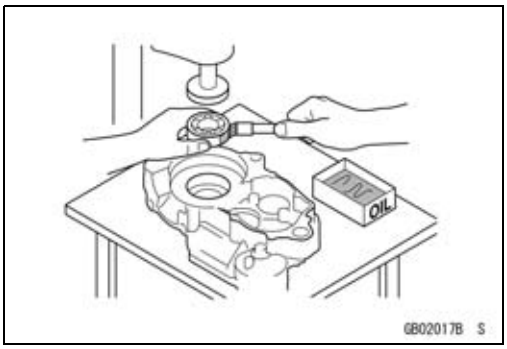

Ball Bearing and Needle Bearing

Do not remove pressed ball or needle unless removal is absolutely necessary. Replace with new ones whenever removed. Press bearings with the manufacturer and size marks facing out. Press the bearing into place by putting pressure on the correct bearing race as shown.

Pressing the incorrect race can cause pressure between the inner and outer race and result in bearing damage.

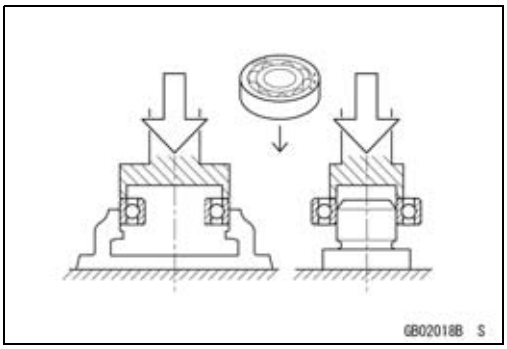

Oil Seal, Grease Seal

Do not remove pressed oil or grease seals unless removal is necessary. Replace with new ones whenever removed. Press new oil seals with manufacture and size marks facing out. Make sure the seal is aligned properly when installing.

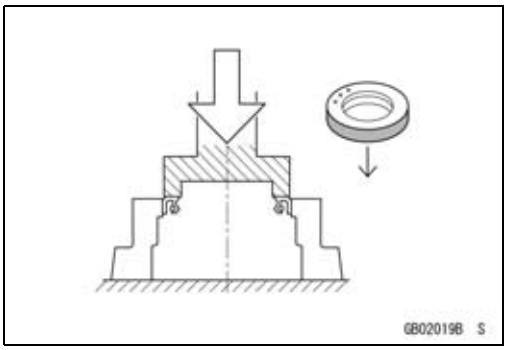

Apply specified grease to the lip of seal before installing the seal.

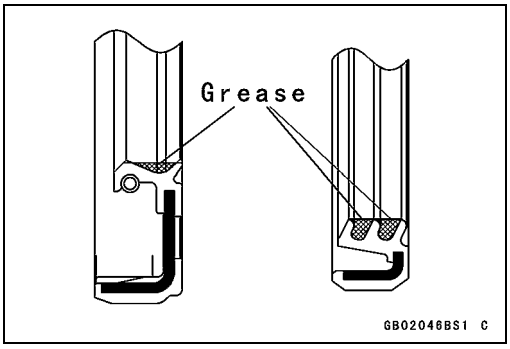

Circlips, Cotter Pins

Replace circlips or cotter pins that were removed with new ones. Take care not to open the clip excessively when installing to prevent deformation.

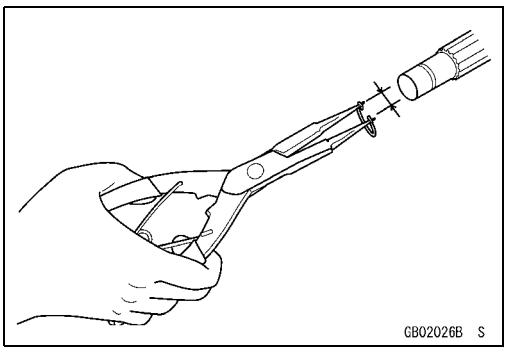

Before Servicing

Lubrication

It is important to lubricate rotating or sliding parts during assembly to minimize wear during initial operation. Lubrication points are called out throughout this manual, apply the specific oil or grease as specified.

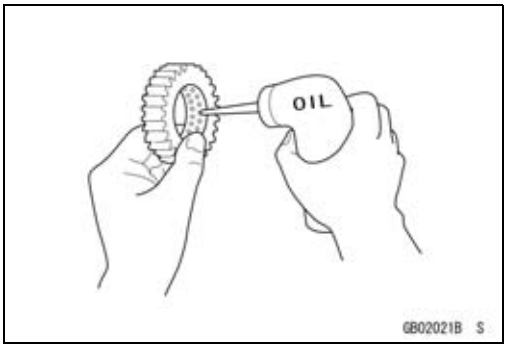

Direction of Engine Rotation

When rotating the crankshaft by hand, the free play amount of rotating direction will affect the adjustment. Rotate the crankshaft to positive direction (clockwise viewed from output side).

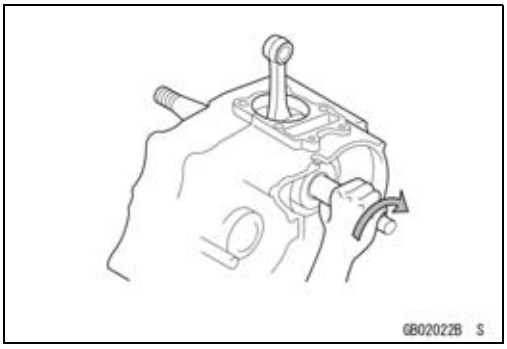

Electrical Leads

A two-color lead is identified first by the primary color and then the stripe color. Unless instructed otherwise, electrical leads must be connected to those of the same color.

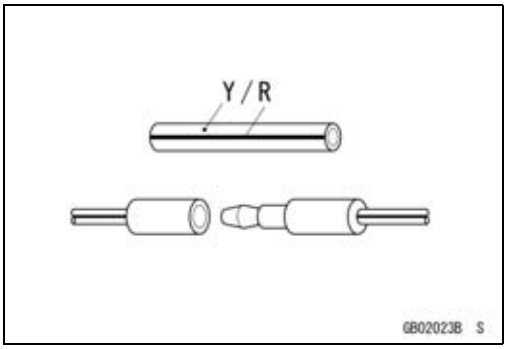

Instrument

Use a meter that has enough accuracy for an accurate measurement. Read the manufacture's instructions thoroughly before using the meter. Incorrect values may lead to improper adjustments.

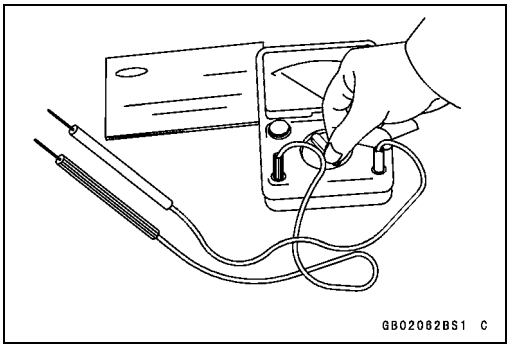

Model Identification

EX650EC (EUR Models) Left Side View

EX650EC (EUR Models) Right Side View

Model Identification

EX650EC (US, CA and CAL Models) Left Side View

EX650EC (US, CA and CAL Models) Right Side View

Model Identification

EX650FC Left Side View

EX650FC Right Side View

Frame Number

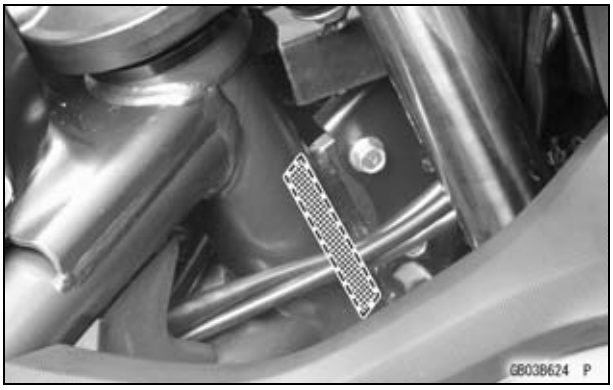

Engine Number

General Specifications

Items	EX650EC/FC
Dimensions	
Overall Length	2 110 mm (83.07 in.)
Overall Width	770 mm (30.3 in.)
Overall Height	1 180 mm (46.46 in.)
Wheelbase	1 410 mm (55.51 in.)
Road Clearance	130 mm (5.12 in.)
Seat Height	805 mm (31.7 in.)
Curb Mass:	
EX650E (Other than IN Model):	209 kg (461 lb)
Front	106 kg (234 lb)
Rear	103 kg (227 lb)
EX650E (IN Model):	211 kg (465 lb)
Front	106 kg (234 lb)
Rear	105 kg (232 lb)
EX650F:	211 kg (465 lb)
Front	106 kg (234 lb)
Rear	105 kg (232 lb)
Fuel Tank Capacity	16 L (4.2 US gal.)
Performance	
Minimum Turning Radius	2.7 m (8.9 ft)
Engine	
Type	4-stroke, DOHC, 2-cylinder
Cooling System	Liquid-cooled
Bore and Stroke	83.0 × 60.0 mm (3.27 × 2.36 in.)
Displacement	649 cm³ (39.6 cu in.)
Compression Ratio	10.8 : 1
Maximum Horsepower	53 kW (72.1 PS) @8 500 r/min (rpm) (AU LAMS) 35 kW (47.6 PS) @8 000 r/min (rpm) (US, CA, CAL) – – – (SEA-B1/B2, TH) 52 kW (70.7 PS) @8 000 r/min (rpm)
Maximum Torque	64 N·m (6.5 kgf·m, 47 ft·lb) @7 000 r/min (rpm) (AU LAMS) 55 N·m (5.6 kgf·m, 41 ft·lb) @3 800 r/min (rpm) (US, CA, CAL) – – –
Carburetion System	FI (Fuel Injection), KEIHIN TTK38 × 2
Starting System	Electric starter
Ignition System	Battery and coil (transistorized)
Timing Advance	Electronically advanced (IC igniter in ECU)
Ignition Timing	From 10° BTDC @1 300 r/min (rpm) To 37° BTDC @5 000 r/min (rpm)
Spark Plug	NGK CR9EIA-9
Cylinder Numbering Method	Left to right, 1-2
Firing Order	1-2

General Specifications

Items	EX650EC/FC
Valve Timing:	
Intake:	
Open	31° BTDC
Close	61° ABDC
Duration	272°
Exhaust:	
Open	50° BBDC
Close	30° ATDC
Duration	260°
Lubrication System	Forced lubrication (semi-dry sump)
Engine Oil:	
Grade	API SG, SH, SJ, SL or SM with JASO MA, MA1 or MA2
Viscosity	SAE 10W-40
Capacity	2.3 L (2.4 US qt)
Drive Train	
Primary Reduction System:	
Type	Gear
Reduction Ratio	2.095 (88/42)
Clutch Type	Wet multi disc
Transmission:	
Type	6-speed, constant mesh, return shift
Gear Ratios:	
1st	2.438 (39/16)
2nd	1.714 (36/21)
3rd	1.333 (32/24)
4th	1.111 (30/27)
5th	0.966 (28/29)
6th	0.852 (23/27)
Final Drive System:	
Type	Chain drive
Reduction Ratio	3.067 (46/15)
Overall Drive Ratio	5.473 @Top gear
Frame	
Type	Tubular, diamond
Caster (Rake Angle)	25°
Trail	110 mm (4.33 in.)
Front Tire:	
Type	Tubeless
Size	120/70 ZR17 M/C (58W)
Rim Size	J17M/C × MT3.50
Rear Tire:	
Type	Tubeless
Size	160/60 ZR17 M/C (69W)
Rim Size	J17M/C × MT4.50

General Specifications

Items	EX650EC/FC
Front Suspension:	
Type	Telescopic fork
Wheel Travel	125 mm (4.92 in.)
Rear Suspension:	
Type	Swingarm
Wheel Travel	130 mm (5.12 in.)
Brake Type:	
Front	Dual discs
Rear	Single disc
Electrical Equipment	
Battery	12 V 10 Ah
Headlight:	
Type	Semi-sealed beam
Bulb:	
High	12 V 55 W + 55 W (quartz-halogen)
Low	12 V 55 W (quartz-halogen)
Tail/Brake Light	LED
Alternator:	
Type	Three-phase AC
Rated Output	24 A/14 V @5 000 r/min (rpm)

Specifications are subject to change without notice, and may not apply to every country.

Unit Conversion Table

Prefixes for Units:

Prefix	Symbol	Power
mega	M	× 1 000 000
kilo	k	× 1 000
centi	c	× 0.01
milli	m	× 0.001
micro	μ	× 0.000001

Units of Mass:

kg	×	2.205	=	lb
g	×	0.03527	=	oz

Units of Volume:

L	×	0.2642	=	gal (US)
L	×	0.2200	=	gal (IMP)
L	×	1.057	=	qt (US)
L	×	0.8799	=	qt (IMP)
L	×	2.113	=	pint (US)
L	×	1.816	=	pint (IMP)
mL	×	0.03381	=	oz (US)
mL	×	0.02816	=	oz (IMP)
mL	×	0.06102	=	cu in

Units of Force:

N	×	0.1020	=	kg
N	×	0.2248	=	lb
kg	×	9.807	=	N
kg	×	2.205	=	lb

Units of Length:

km	×	0.6214	=	mile
m	×	3.281	=	ft
mm	×	0.03937	=	in

Units of Torque:

N·m	×	0.1020	=	kgf·m
N·m	×	0.7376	=	ft·lb
N·m	×	8.851	=	in·lb
kgf·m	×	9.807	=	N·m
kgf·m	×	7.233	=	ft·lb
kgf·m	×	86.80	=	in·lb

Units of Pressure:

kPa	×	0.01020	=	kgf/cm²
kPa	×	0.1450	=	psi
kPa	×	0.7501	=	cmHg
kgf/cm²	×	98.07	=	kPa
kgf/cm²	×	14.22	=	psi
cmHg	×	1.333	=	kPa

Units of Speed:

km/h	×	0.6214	=	mph

Units of Power:

kW	×	1.360	=	PS
kW	×	1.341	=	HP
PS	×	0.7355	=	kW
PS	×	0.9863	=	HP

Units of Temperature:

$$\frac{9(°C+40)}{5} - 40 = °F \qquad \frac{5(°F+40)}{9} - 40 = °C$$

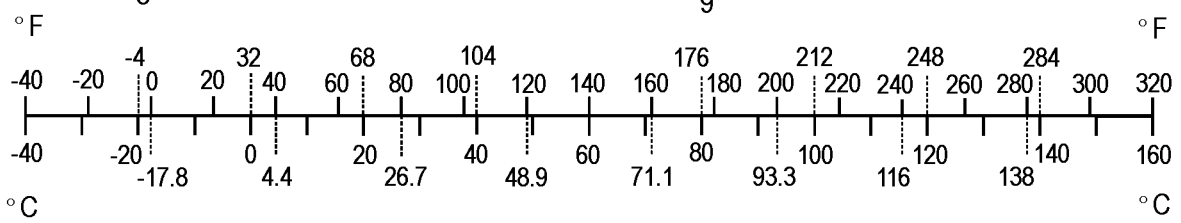

Periodic Maintenance

Table of Contents

Periodic Maintenance Chart 2-3
Torque and Locking Agent 2-6
Specifications 2-12
Special Tools 2-14
Periodic Maintenance Procedures 2-15
  Fuel System (DFI) 2-15
    Throttle Control System Inspection 2-15
    Engine Vacuum Synchronization Inspection 2-15
    Idle Speed Inspection 2-18
    Idle Speed Adjustment 2-18
    Fuel Hose Inspection (fuel leak, damage, installation condition) 2-19
    Evaporative Emission Control System Inspection (CAL, SEA-B1 and TH Models) 2-20
  Cooling System 2-20
    Coolant Level Inspection 2-20
    Water Hose Damage and Installation Condition Inspection 2-21
  Engine Top End 2-21
    Valve Clearance Inspection 2-21
    Valve Clearance Adjustment 2-22
    Air Suction System Damage Inspection 2-25
  Clutch 2-25
    Clutch Operation Inspection 2-25
  Wheels/Tires 2-26
    Air Pressure Inspection 2-26
    Wheel/Tire Damage Inspection 2-27
    Tire Tread Wear, Abnormal Wear Inspection 2-27
    Wheel Bearing Damage Inspection 2-28
  Final Drive 2-28
    Drive Chain Lubrication Condition Inspection 2-28
    Drive Chain Slack Inspection 2-29
    Drive Chain Slack Adjustment 2-29
    Wheel Alignment Inspection 2-30
    Drive Chain Wear Inspection 2-31
    Chain Guide Inspection 2-31
  Brake System 2-32
    Brake Fluid Leak (Brake Hose and Pipe) Inspection 2-32
    Brake Hose and Pipe Damage and Installation Condition Inspection 2-32
    Brake Fluid Level Inspection 2-33
    Brake Pad Wear Inspection 2-34
    Brake Operation Inspection 2-34
    Brake Light Switch Operation Inspection 2-34
  Suspensions 2-35
    Front Forks/Rear Shock Absorber Operation Inspection 2-35
    Front Fork Oil Leak Inspection 2-35
    Rear Shock Absorber Oil Leak Inspection 2-36
  Steering System 2-36
    Steering Play Inspection 2-36
    Steering Play Adjustment 2-36
    Steering Stem Bearing Lubrication 2-38
  Electrical System 2-39
    Lights and Switches Operation Inspection 2-39

Headlight Aiming Inspection 2-41
Sidestand Switch Operation Inspection 2-42
Engine Stop Switch Operation Inspection 2-43
Others 2-44
Chassis Parts Lubrication 2-44
Bolts, Nuts and Fasteners Tightness Inspection 2-45
Replacement Parts 2-46
Air Cleaner Element Replacement 2-46
Fuel Hose Replacement 2-47
Coolant Change 2-48
Radiator Hose and O-ring Replacement 2-50
Engine Oil Change 2-50
Oil Filter Replacement 2-51
Brake Hose and Pipe Replacement 2-52
Brake Fluid Change 2-54
Master Cylinder Rubber Parts Replacement 2-55
Caliper Rubber Parts Replacement 2-56
Spark Plug Replacement 2-59

Periodic Maintenance Chart

The scheduled maintenance must be done in accordance with this chart to keep the motorcycle in good running condition.**The initial maintenance is vitally important and must not be neglected.**

Periodic Inspection

FREQUENCY / ITEM	Whichever comes first ➡ / ⬇ Every	* ODOMETER READING × 1 000 km (× 1 000 mile) 1 (0.6)	6 (3.75)	12 (7.5)	18 (11.25)	24 (15)	30 (18.75)	36 (22.5)	See Page
Fuel System									
Throttle control system (play, smooth return, no drag) - inspect	year	●		●		●		●	2-15
Engine vacuum synchronization - inspect				●		●		●	2-15
Idle speed - inspect		●		●		●		●	2-18
Fuel leak (fuel hose and pipe) - inspect	year	●		●		●		●	2-19
Fuel hose and pipe damage - inspect	year	●		●		●		●	2-19
Fuel hose and pipe installation condition - inspect	year	●		●		●		●	2-19
Evaporative emission control system function (CAL, SEA-B1 and TH Models) - inspect		●	●	●	●	●	●	●	2-20
Cooling System									
Coolant level - inspect		●		●		●		●	2-20
Coolant leak (water hose and pipe) - inspect	year	●		●		●		●	2-21
Water hose damage - inspect	year	●		●		●		●	2-21
Water hose installation condition - inspect	year	●		●		●		●	2-21
Engine Top End									
Valve clearance - inspect: CA Model						●			2-21
Valve clearance - inspect: Other than CA Model		Every 42 000 km (26 250 mile)							2-21
Air suction system damage - inspect				●		●		●	2-25
Clutch									
Clutch operation (play, disengagement, engagement) - inspect		●		●		●		●	2-25
Wheels and Tires									
Tire air pressure - inspect	year			●		●		●	2-26
Wheel/tire damage - inspect				●		●		●	2-27
Tire tread wear, abnormal wear - inspect				●		●		●	2-27
Wheel bearing damage - inspect	year			●		●		●	2-28

Periodic Maintenance Chart

FREQUENCY / ITEM	Whichever comes first ➡ ⬇ Every	* ODOMETER READING × 1 000 km (× 1 000 mile) 1 (0.6)	6 (3.75)	12 (7.5)	18 (11.25)	24 (15)	30 (18.75)	36 (22.5)	See Page
Final Drive									
Drive chain lubrication condition - inspect #	Every 600 km (400 mile)								2-28
Drive chain slack - inspect #	Every 1 000 km (600 mile)								2-29
Drive chain wear - inspect #				●		●		●	2-31
Chain guide wear - inspect				●		●		●	2-31
Brakes									
Brake fluid leak (brake hose and pipe) - inspect	year	●	●	●	●	●	●	●	2-32
Brake hose and pipe damage - inspect	year	●	●	●	●	●	●	●	2-32
Brake hose and pipe installation condition - inspect	year	●	●	●	●	●	●	●	2-32
Brake fluid level - inspect	6 months	●	●	●	●	●	●	●	2-33
Brake pad wear - inspect #			●	●	●	●	●	●	2-34
Brake operation (effectiveness, play, no drag) - inspect	year	●	●	●	●	●	●	●	2-34
Brake light switch operation - inspect		●	●	●	●	●	●	●	2-34
Suspension									
Front forks/rear shock absorber operation (damping and smooth stroke) - inspect				●		●		●	2-35
Front forks/rear shock absorber oil leak - inspect	year			●		●		●	2-35
Steering									
Steering play - inspect	year	●		●		●		●	2-36
Steering stem bearings - lubricate	2 years					●			2-38
Electrical System									
Lights and switches operation - inspect	year			●		●		●	2-39
Headlight aiming - inspect	year			●		●		●	2-41
Sidestand switch operation - inspect	year			●		●		●	2-42
Engine stop switch operation - inspect	year			●		●		●	2-43
Others									
Chassis parts - lubricate	year			●		●		●	2-44
Bolts and nuts tightness - inspect		●		●		●		●	2-45

#: Service more frequently when operating in severe conditions; dusty, wet, muddy, high speed or frequent starting/stopping.

*: For higher odometer readings, repeat at the frequency interval established here.

Periodic Maintenance Chart

Periodic Replacement Parts

FREQUENCY / ITEM	Whichever comes first ➡ / ⬇ Every	* ODOMETER READING × 1 000 km (× 1 000 mile) 1 (0.6)	12 (7.5)	24 (15)	36 (22.5)	48 (30)	See Page
Air cleaner element # - replace	every 18 000 km (11 250 mile)						2-46
Engine oil # - change	year	●	●	●	●	●	2-50
Oil filter - replace	year	●	●	●	●	●	2-51
Fuel hose - replace	5 years						2-47
Coolant - change	3 years				●		2-48
Radiator hose and O-ring - replace	3 years				●		2-50
Brake hose - replace	4 years					●	2-52
Brake fluid - change	2 years			●		●	2-54
Rubber parts of master cylinder and caliper - replace	4 years					●	2-55
Spark plug - replace			●	●	●	●	2-59

#: Service more frequently when operating in severe conditions; dusty, wet, muddy, high speed or frequent starting/stopping.

*: For higher odometer readings, repeat at the frequency interval established here.

Torque and Locking Agent

The following tables list the tightening torque for the major fasteners requiring use of a non-permanent locking agent or silicone sealant etc.

Letters used in the “Remarks” column mean:
AL: Tighten the two clamp bolts alternately two times to ensure even tightening torque.
EO: Apply engine oil.
L: Apply a non-permanent locking agent to the threads.
LG: Apply liquid gasket.
Lh: Left-hand Threads
MO: Apply molybdenum disulfide oil solution.
(mixture of the engine oil and molybdenum disulfide grease in a weight ratio 10 : 1)
R: Replacement Parts
S: Follow the specified tightening sequence.
Si: Apply silicone grease (ex. PBC grease).

Fastener	Torque			Remarks
	N·m	kgf·m	ft·lb	
Fuel System (DFI)				
Fuel Pump Bolts	9.8	1.0	87 in·lb	L, S
Air Cleaner Housing Cover Screws	1.2	0.12	11 in·lb	
Air Cleaner Element Screw	1.2	0.12	11 in·lb	
Air Cleaner Housing Clamp Bolt	2.0	0.20	18 in·lb	
Intake Air Temperature Sensor Screw	1.2	0.12	11 in·lb	
Throttle Body Assy Holder Clamp Bolts	2.0	0.20	18 in·lb	
Oxygen Sensor (Equipped Models)	44	4.5	32	
Speed Sensor Bolt	7.8	0.80	69 in·lb	L
Speed Sensor Bracket Bolts	9.8	1.0	87 in·lb	
Switch Housing Screws	3.5	0.36	31 in·lb	
Timing Rotor Bolt	40	4.1	30	
Water Temperature Sensor	12	1.2	106 in·lb	
Cooling System				
Radiator Bolt	7.9	0.81	70 in·lb	
Water Hose Clamp Screws	3.0	0.31	27 in·lb	
Thermostat Housing Bolts	9.8	1.0	87 in·lb	L
Water Pump Cover Bolts	9.8	1.0	87 in·lb	
Water Pump Drain Bolt	9.8	1.0	87 in·lb	
Water Pump Impeller Bolt	9.8	1.0	87 in·lb	
Water Temperature Sensor	12	1.2	106 in·lb	
Engine Top End				
Air Suction Valve Cover Bolts	9.8	1.0	87 in·lb	
Baffle Plate Bolts	5.9	0.60	52 in·lb	
Camshaft Cap Bolts	12	1.2	106 in·lb	S
Camshaft Chain Tensioner Cap Bolt	20	2.0	15	
Camshaft Chain Tensioner Mounting Bolts	9.8	1.0	87 in·lb	L
Camshaft Sprocket Bolts	15	1.5	11	L
Cylinder Head Bolts (M10)	56	5.7	41	MO, S
Cylinder Head Bolts (M6)	12	1.2	106 in·lb	L, S
Cylinder Head Cover Bolts	9.8	1.0	87 in·lb	

Torque and Locking Agent

Fastener	Torque			Remarks
	N·m	kgf·m	ft·lb	
Rear Camshaft Chain Guide Bolt	20	2.0	15	L
Throttle Body Assy Holder Bolts	12	1.2	106 in·lb	
Cylinder Bolt (M8)	27.5	2.8	20	MO, S
Cylinder Nut	49	5.0	36	MO, S
Cylinder Bolts (M6)	12	1.2	106 in·lb	L, S
Exhaust Pipe Manifold Holder Nuts	17	1.7	13	
Muffler Body Mounting Bolts	20	2.0	15	
Clutch				
Clutch Cable Clamp Bracket Bolt	9.8	1.0	87 in·lb	
Clutch Cable Holder Bolts	9.8	1.0	87 in·lb	L
Clutch Cover Bolts	9.8	1.0	87 in·lb	
Clutch Hub Nut	130	13.3	96	R
Clutch Lever Clamp Bolts	7.8	0.80	69 in·lb	S
Clutch Spring Bolts	9.8	1.0	87 in·lb	
Timing Rotor Bolt Cap	4.9	0.50	43 in·lb	
Oil Filler Plug	–	–	–	Hand-tighten
Oil Pump Chain Guide Bolts	12	1.2	106 in·lb	L
Oil Pump Sprocket Bolt	12	1.2	106 in·lb	L, Lh
Timing Inspection Cap	3.9	0.40	35 in·lb	
Engine Lubrication System				
Engine Oil Drain Plug	30	3.1	22	
Filter Plate Bolts	9.8	1.0	87 in·lb	L
Holder Mounting Bolt	25	2.5	18	L
Lower Fairing Bracket Bolts	12	1.2	106 in·lb	L
Oil Filter	17.5	1.8	13	EO, R
Oil Pan Bolts	12	1.2	106 in·lb	S
Oil Passage Plug	20	2.0	15	L
Oil Passage Plug (M6)	3.5	0.36	31 in·lb	
Oil Pipe Plate Bolt	9.8	1.0	87 in·lb	L
Oil Plate Bolts	9.8	1.0	87 in·lb	L
Oil Pressure Relief Valve	15	1.5	11	L
Oil Pressure Switch	15	1.5	11	LG
Oil Pump Chain Guide Bolts	12	1.2	106 in·lb	L
Oil Pump Cover Bolts	9.8	1.0	87 in·lb	L
Oil Pump Sprocket Bolt	12	1.2	106 in·lb	L, Lh
Engine Removal/Installation				
Front Engine Mounting Bolt (Left)	44	4.5	32	S
Front Engine Mounting Bolt (Right)	49	5.0	36	S
Front Engine Bracket Bolts (Left)	25	2.5	18	S
Front Engine Bracket Bolts (Right)	30	3.1	22	S
Rear Engine Mounting Bolts	44	4.5	32	S
Rear Engine Mounting Nuts	44	4.5	32	R, S
Rear Engine Bracket Bolts	25	2.5	18	S

Torque and Locking Agent

Fastener	Torque			Remarks
	N·m	kgf·m	ft·lb	
Engine Ground Lead Terminal Bolt	9.8	1.0	87 in·lb	
Crankshaft/Transmission				
Breather Plate Bolts	9.8	1.0	87 in·lb	L
Race Holder Screw	4.9	0.50	43 in·lb	L
Connecting Rod Big End Nuts	see Text	←	←	MO
Crankcase Bolt (M8, L = 110 mm)	27.5	2.8	20	S
Crankcase Bolt (M6, L = 32 mm)	19.6	2.0	14	S
Crankcase Bolts (M6, L = 38 mm)	19.6	2.0	14	S
Crankcase Bolts (M6, L = 45 mm)	19.6	2.0	14	S
Crankcase Bolt (M8, L = 50 mm)	27.5	2.8	20	S
Crankcase Bolts (M8, L = 60 mm)	25.5	2.6	19	MO, S
Crankcase Bolt (M8, L = 60 mm)	27.5	2.8	20	S
Crankcase Bolts (M8, L = 73 mm)	25.5	2.6	19	MO, S
Crankcase Bolts (M9, L = 113 mm)	44	4.5	32	MO, S
Crankcase Bolts (M9, L = 83 mm)	44	4.5	32	MO, S
Upper Crankcase Bolt (M8, L = 120 mm)	27.5	2.8	20	S
Upper Crankcase Bolts (M8, L = 110 mm)	27.5	2.8	20	S
Oil Pipe Bolts	9.8	1.0	87 in·lb	L
Oil Plate Bolts	9.8	1.0	87 in·lb	L
Shift Shaft Return Spring Pin	29	3.0	21	L
Timing Rotor Bolt	40	4.1	30	
Drive Shaft Bearing Holder Screw	4.9	0.50	43 in·lb	L
Gear Positioning Lever Bolt	12	1.2	106 in·lb	L
Neutral Switch	15	1.5	11	
Neutral Switch Holder Screw	4.9	0.50	43 in·lb	L
Transmission Case Oil Nozzle	2.9	0.30	26 in·lb	L
Shift Drum Bearing Holder Screws	4.9	0.50	43 in·lb	L
Shift Drum Cam Bolt	12	1.2	106 in·lb	L
Shift Pedal Bolt	12	1.2	106 in·lb	
Shift Rod Plate Bolt	9.8	1.0	87 in·lb	L
Shift Shaft Cover Bolts	9.8	1.0	87 in·lb	L (3)
Shift Shaft Cover Screw	4.9	0.50	43 in·lb	L, S
Transmission Case Bolts	20	2.0	15	
Wheels/Tires				
Front Axle	108	11.0	80	
Front Axle Clamp Bolt	34	3.5	25	
Rear Axle Nut	108	11.0	80	
Final Drive				
Engine Sprocket Nut	125	12.7	92	MO
Rear Axle Nut	108	11.0	80	
Rear Sprocket Nuts	59	6.0	44	R
Speed Sensor Bolt	7.8	0.80	69 in·lb	L
Speed Sensor Bracket Bolts	9.8	1.0	87 in·lb	

Torque and Locking Agent

Fastener	Torque			Remarks
	N·m	kgf·m	ft·lb	
Engine Sprocket Cover Bolts	9.8	1.0	87 in·lb	
Brakes				
Caliper Bleed Valves	7.8	0.80	69 in·lb	
Brake Hose Banjo Bolts	25	2.5	18	
Brake Lever Pivot Bolt	1.0	0.10	9 in·lb	Si
Brake Lever Pivot Bolt Locknut	5.9	0.60	52 in·lb	R
Brake Disc Mounting Bolts	27	2.8	20	L
Front Brake Light Switch Screw	1.2	0.12	11 in·lb	
Front Brake Reservoir Cap Screws	1.5	0.15	13 in·lb	
Front Caliper Mounting Bolts	34	3.5	25	
Front Master Cylinder Clamp Bolts	11	1.1	97 in·lb	S
Brake Pedal Bolt	8.8	0.90	78 in·lb	
Rear Caliper Mounting Bolts	25	2.5	18	
Rear Master Cylinder Mounting Bolts	25	2.5	18	
Rear Master Cylinder Push Rod Locknut	17	1.7	13	
Brake Pipe Joint Nuts (EX650F Model)	18	1.8	13	
Wheel Rotation Sensor Bolts (EX650F Model)	20	2.0	15	
Suspension				
Front Axle Clamp Bolt	34	3.5	25	
Front Fork Bottom Allen Bolts	30	3.1	22	L
Front Fork Clamp Bolts (Lower)	20.5	2.1	15	AL
Front Fork Clamp Bolts (Upper)	20	2.0	15	
Front Fork Top Plugs	22.5	2.3	17	
Rear Shock Absorber Mounting Bolts	59	6.0	44	
Swingarm Bracket Bolts	44	4.5	32	S
Swingarm Bracket Bolt (Lower Left)	59	6.0	44	S
Swingarm Pivot Shaft Nut	108	11.0	80	S
Steering				
Front Fork Clamp Bolts (Lower)	20.5	2.1	15	AL
Front Fork Clamp Bolts (Upper)	20	2.0	15	
Handlebar Holder Bolts	25	2.5	18	S
Handlebar Holder Mounting Nuts	34	3.5	25	R
Switch Housing Screws	3.5	0.36	31 in·lb	
Steering Stem Head Bolt	108	11.0	80	
Steering Stem Nut	20	2.0	15	
Frame				
Footpeg Stay Bolts	25	2.5	18	S
Front Turn Signal Light Mounting Screws	1.2	0.12	11 in·lb	
Grab Rail Mounting Bolts	25	2.5	18	
Lower Fairing Bracket Bolts	12	1.2	106 in·lb	L
Lower Fairing Mounting Bolts	15	1.5	11	L
Seat Lock Mounting Screws	0.4	0.04	4 in·lb	
Sidestand Bolt	44	4.5	32	

Torque and Locking Agent

Fastener	Torque			Remarks
	N·m	kgf·m	ft·lb	
Sidestand Switch Bolt	8.8	0.90	78 in·lb	L
Windshield Mounting Bolts	4.2	0.43	37 in·lb	
Upper Saree Guard Mounting Bolts (IN Model)	25	2.5	18	
Lower Saree Guard Mounting Bolt (IN Model)	27	2.8	20	L
Saree Guard Bracket Bolts (IN Model)	15	1.5	11	L
Electrical System				
License Plate Light Mounting Screws	1.2	0.12	11 in·lb	
Alternator Cover Bolts	9.8	1.0	87 in·lb	
Alternator Lead Holding Plate Bolt	9.8	1.0	87 in·lb	L
Alternator Rotor Bolt	155	15.8	114	MO
Engine Ground Lead Terminal Bolt	9.8	1.0	87 in·lb	
Front Brake Light Switch Screw	1.2	0.12	11 in·lb	
Front Turn Signal Light Mounting Screws	1.2	0.12	11 in·lb	
Fuel Pump Bolts	9.8	1.0	87 in·lb	L, S
Regulator/Rectifier Bolts	9.8	1.0	87 in·lb	
Switch Housing Screws	3.5	0.36	31 in·lb	
Sidestand Switch Bolt	8.8	0.90	78 in·lb	L
Starter Motor Cable Terminal Nut	6.0	0.61	53 in·lb	
Starter Motor Clutch Bolts	34	3.5	25	L
Starter Motor Mounting Bolts	9.8	1.0	87 in·lb	L
Starter Motor Terminal Locknut	11	1.1	97 in·lb	
Starter Motor Through Bolts	5.0	0.51	44 in·lb	
Starter Replay Terminal Bolts	3.6	0.36	31 in·lb	
Stator Coil Bolts	12	1.2	106 in·lb	L
Crankshaft Sensor Bolts	6.0	0.61	53 in·lb	
Neutral Switch	15	1.5	11	
Oil Pressure Switch	15	1.5	11	LG
Oxygen Sensor (Equipped Models)	44	4.5	32	
Spark Plugs	15	1.5	11	
Speed Sensor Bolt	7.8	0.80	69 in·lb	L
Timing Rotor Bolt	40	4.1	30	
Water Temperature Sensor	12	1.2	106 in·lb	

Torque and Locking Agent

The table below, relating tightening torque to thread diameter, lists the basic torque for the bolts and nuts. Use this table for only the bolts and nuts which do not require a specific torque value. All of the values are for use with dry solvent-cleaned threads.

Basic Torque for General Fasteners

Threads Diameter (mm)	Torque		
	N·m	kgf·m	ft·lb
5	3.4 ~ 4.9	0.35 ~ 0.50	30 ~ 43 in·lb
6	5.9 ~ 7.8	0.60 ~ 0.80	52 ~ 69 in·lb
8	14 ~ 19	1.4 ~ 1.9	10.0 ~ 13.5
10	25 ~ 34	2.6 ~ 3.5	19.0 ~ 25
12	44 ~ 61	4.5 ~ 6.2	33 ~ 45
14	73 ~ 98	7.4 ~ 10.0	54 ~ 72
16	115 ~ 155	11.5 ~ 16.0	83 ~ 115
18	165 ~ 225	17.0 ~ 23.0	125 ~ 165
20	225 ~ 325	23.0 ~ 33.0	165 ~ 240

Specifications

Item	Standard	Service Limit
Fuel System (DFI)		
Throttle Grip Free Play	2 ~ 3 mm (0.08 ~ 0.12 in.)	– – –
Idle Speed	1 300 ±50 r/min (rpm)	– – –
Bypass Screws (Turn out)	0 ~ 2 1/2 (for reference)	– – –
Engine Vacuum	35.3 ±1.3 kPa (265 ±10 mmHg)	– – –
Air Cleaner Element	Polyurethane Foam	– – –
Cooling System		
Coolant:		
Type (recommended)	Permanent type of antifreeze	– – –
Color	Green	– – –
Mixed Ratio	Soft water 50%, Coolant 50%	– – –
Freezing Point	–35°C (–31°F)	– – –
Total Amount	1.2 L (1.3 US qt)	– – –
Engine Top End		
Valve Clearance:		
Exhaust	0.22 ~ 0.31 mm (0.0087 ~ 0.0122 in.)	– – –
Intake	0.15 ~ 0.21 mm (0.0059 ~ 0.0083 in.)	– – –
Clutch		
Clutch Lever Free Play	2 ~ 3 mm (0.08 ~ 0.12 in.)	– – –
Engine Lubrication System		
Engine Oil:		
Type	API SG, SH, SJ, SL or SM with JASO MA, MA1 or MA2	– – –
Viscosity	SAE 10W-40	– – –
Capacity	1.6 L (1.7 US qt) (when filter is not removed)	– – –
	1.8 L (1.9 US qt) (when filter is removed)	– – –
	2.3 L (2.4 US qt) (when engine is completely dry)	– – –
Level	Between upper and lower level lines (after idling or running)	– – –
Wheels/Tires		
Tread Depth:		
Front	4.5 mm (0.18 in.)	1 mm (0.04 in.), (AT, CH, DE) 1.6 mm (0.06 in.)
Rear	6.4 mm (0.25 in.)	Up to 130 km/h (80 mph): 2 mm (0.08 in.), Over 130 km/h (80 mph): 3 mm (0.12 in.)
Air Pressure (when Cold):		
Front	Up to 200 kg (441 lb) load: 225 kPa (2.25 kgf/cm², 32 psi)	– – –
Rear	Up to 200 kg (441 lb) load: 250 kPa (2.50 kgf/cm², 36 psi)	– – –

Specifications

Item	Standard	Service Limit
Final Drive		
Drive Chain Slack	25 ~ 35 mm (1.0 ~ 1.4 in.)	– – –
Chain 20-link Length	317.5 ~ 318.2 mm (12.50 ~ 12.53 in.)	323 mm (12.7 in.)
Standard Chain:		
Make	DAIDO	– – –
Type	DID 520VP2-T	– – –
Link	114 links	– – –
Brakes		
Brake Fluid:		
Grade	DOT4	– – –
Brake Pad Lining Thickness:		
Front	4.5 mm (0.18 in.)	1 mm (0.04 in.)
Rear	5.0 mm (0.20 in.)	1 mm (0.04 in.)
Brake Light Timing:		
Front	Pulled ON	– – –
Rear	ON after about 10 mm (0.39 in.) of pedal travel	– – –
Electrical System		
Spark Plug:		
Type	NGK CR9EIA-9	– – –

Special Tools

Inside Circlip Pliers:
57001-143

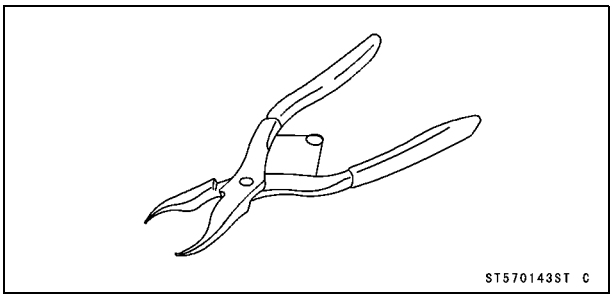

Steering Stem Nut Wrench:
57001-1100

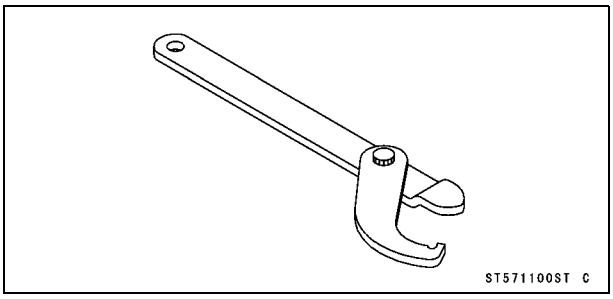

Jack:
57001-1238

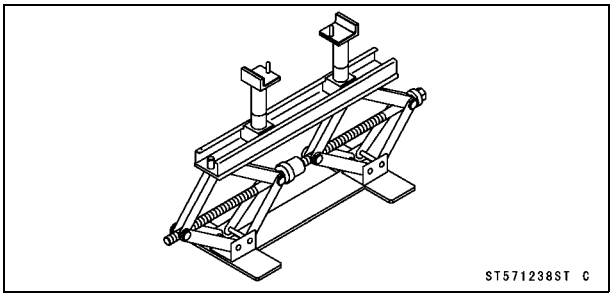

Oil Filter Wrench:
57001-1249

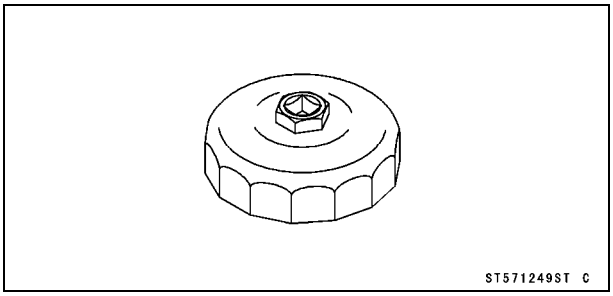

Vacuum Gauge:
57001-1369

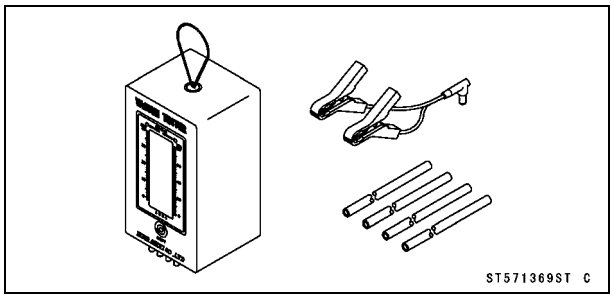

Throttle Sensor Setting Adapter:
57001-1538

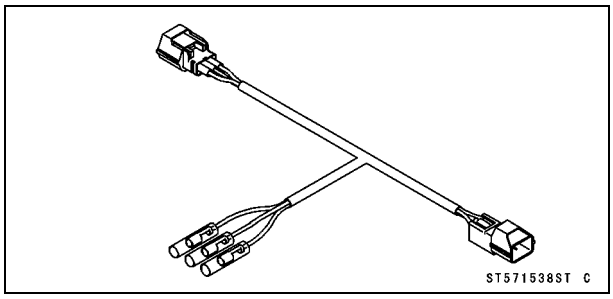

Extension Tube:
57001-1578

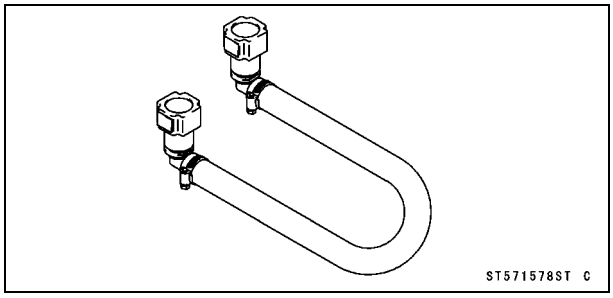

Pilot Screw Adjuster, E:
57001-1603

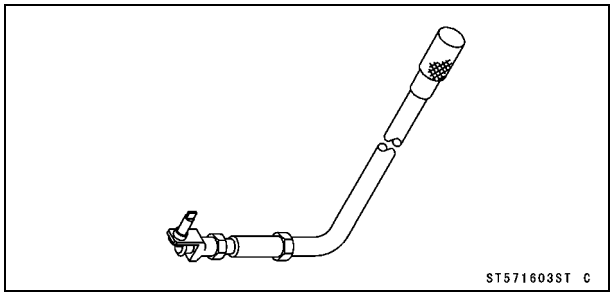

Periodic Maintenance Procedures

Fuel System (DFI)

Throttle Control System Inspection

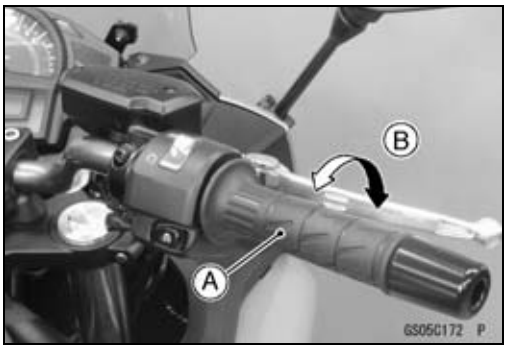

- Check that the throttle grip [A] moves smoothly from full open to close, and the throttle closes quickly and completely by the return spring in all steering positions.

★If the throttle grip does not return properly, check the throttle cable routing, grip free play, and cable damage. Then lubricate the throttle cable.

- Check the throttle grip free play [B].

Throttle Grip Free Play
Standard: 2 ~ 3 mm (0.08 ~ 0.12 in.)

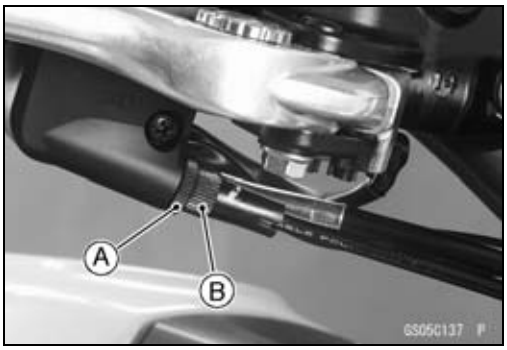

★If the free play is incorrect, adjust the throttle cable as follows.

- Loosen the locknut [A] at the upper end of the accelerator cable.
- Turn the adjuster [B] in completely so as to give the throttle grip plenty of play.

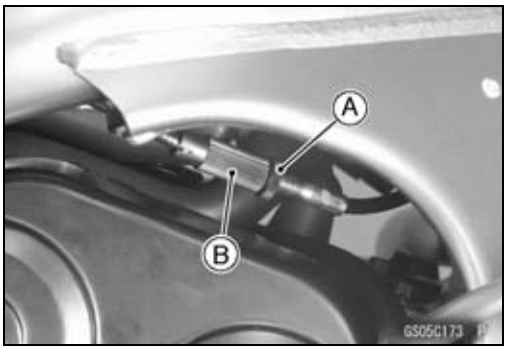

- Remove the right middle fairing (see Middle Fairing Removal in the Frame chapter).
- Loosen the locknut [A] at the middle of the decelerator cable.
- Turn the adjuster [B] until there is no play when the throttle grip is completely closed.
- Tighten the locknut.
- Turn the accelerator cable adjuster until the proper amount of throttle grip free play is obtained.
- Tighten the locknut.
- Install the right middle fairing (see Middle Fairing Installation in the Frame chapter).

Engine Vacuum Synchronization Inspection

NOTE

○*These procedures are explained on the assumption that the intake and exhaust systems of the engine are in good condition.*

- Situate the motorcycle so that it is vertical.
- Remove:
  Fuel Tank (see Fuel Tank Removal in the Fuel System (DFI) chapter)
  Air Cleaner Housing (see Air Cleaner Housing Removal in the Fuel System (DFI) chapter)
  Fuel Hose (see Fuel Hose Replacement)
- Remove the rubber caps [A] from the fittings on the throttle body

Periodic Maintenance Procedures

- For CAL, SEA-B1 and TH models, remove the tubes [A] from the fittings on the throttle body.

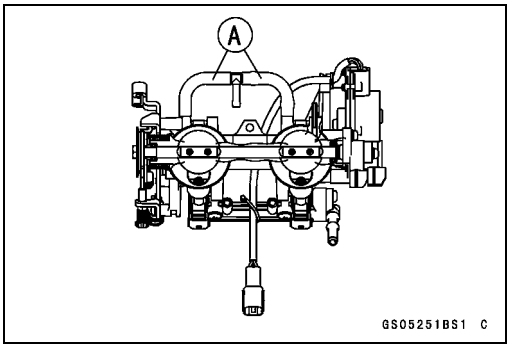

- Connect a vacuum gauge (special tool) and hoses [A] to the fittings on the throttle body.

  Special Tool - Vacuum Gauge: 57001-1369

- Connect a highly accurate tachometer to one of the stick coil primary leads.

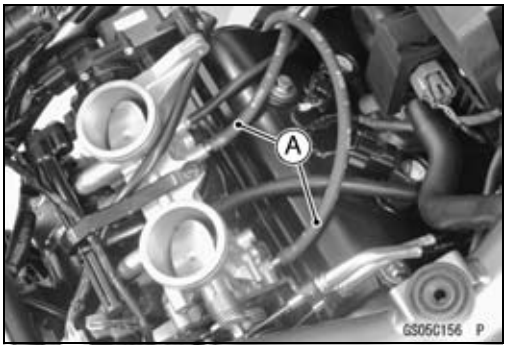

- Install:
  Air Cleaner Housing (see Air Cleaner Housing Installation in the Fuel System (DFI) chapter)
  ECU (see ECU Installation in the Fuel System (DFI) chapter)
  Intake Air Temperature Sensor Connector (Connect)
- Connect the following temporarily:
  Fuel Pump Lead Connector [A]
  Extension Tube [B]

  Special Tool - Extension Tube: 57001-1578

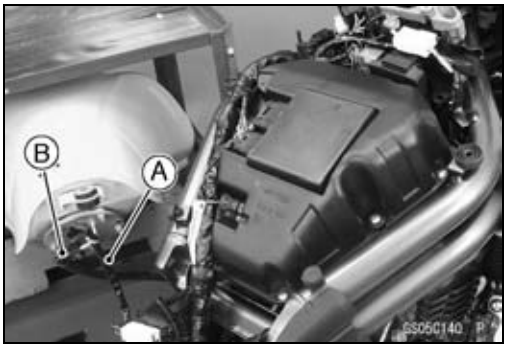

- Start the engine and warm it up thoroughly.
- Check the idle speed using a highly accurate tachometer.

  Idle Speed
  Standard: 1 300 ±50 r/min (rpm)

★If the idle speed is out of the specified range, adjust it (see Idle Speed Adjustment).

NOTICE
Do not measure the idle speed by the tachometer of the meter unit.

- While idling the engine, inspect the engine vacuum, using the vacuum gauge.

  Engine Vacuum
  Standard: 35.3 ±1.3 kPa (265 ±10 mmHg) at Idle Speed

Periodic Maintenance Procedures

★If any one vacuum is not within the specification, turn in the bypass screws until it seats fully but not tightly.

Special Tool - Pilot Screw Adjuster, E [A]: 57001-1603

NOTICE
Do not over tighten them. They could be damaged, requiring replacement.

- Turn out the bypass screw of the higher vacuum between #1 [A] and #2 [B] to the lower vacuum.
- Open and close the throttle valves after each measurement and adjust the idle speed as necessary.
- Inspect the vacuums as before.

★If both vacuums are within the specification, finish the engine vacuum synchronization.

★If any vacuum can not be adjusted within the specification, remove the bypass screws #1, #2 and clean them.

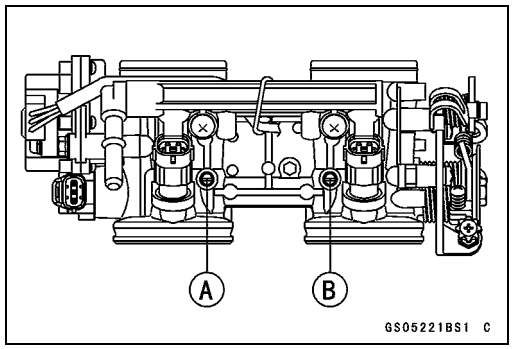

- Remove the bypass screw [A], spring [B], washer [C] and O-ring [D].
- Check the bypass screw hole in the throttle body for carbon deposits.

★If any carbons accumulate, wipe the carbons off from the hole, using a cotton pad penetrated with a high flash-point solvent.

- Replace the bypass screw, spring, washer and O-ring as a set.
- Turn in the bypass screw until it seats fully but not tightly.

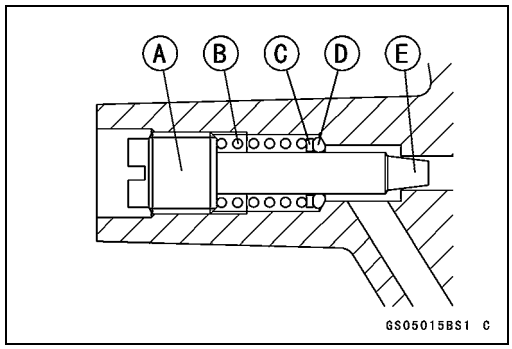

NOTICE
Do not over-tighten the bypass screw. The tapered portion [E] of the bypass screw could be damaged.

- Repeat the same procedure for other bypass screw.
- Inspect the synchronization again.

★If the vacuums are correct, check the output voltage of the main throttle sensor (see Main Throttle Sensor Output Voltage Inspection in the Fuel System (DFI) chapter).

Special Tool - Throttle Sensor Setting Adapter: 57001-1538

Main Throttle Sensor Output Voltage
Connections to Adapter:

Meter (+) → R (Sensor Y/BL) lead

Meter (–) → W (Sensor BR/BK) lead

Standard: DC 1.005 ~ 1.035 V at idle throttle opening

★If the output voltage is out of the range, check the main throttle sensor input voltage (see Main Throttle Sensor Input Voltage Inspection in the Fuel System (DFI) chapter).

- Disconnect:
  Fuel Pump Lead Connector
  Extension Tube
- Remove the air cleaner housing (see Air Cleaner Housing Removal in the Fuel System (DFI) chapter), take off the vacuum gauge hoses and install the rubber caps onto the fittings on the throttle body assy.
- For CAL, SEA-B1 and TH Models, install the tubes onto the fittings on the throttle body assy.
- Install:
  Air Cleaner Housing (see Air Cleaner Housing Installation in the Fuel System (DFI) chapter)
  Fuel Tank (see Fuel Tank Installation in the Fuel System (DFI) chapter)

Idle Speed Inspection

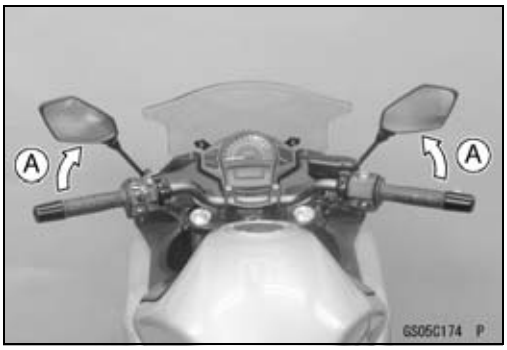

- Start the engine and warm it up thoroughly.
- With the engine idling, turn [A] the handlebar to both sides.

★If handlebar movement changes the idle speed, the throttle cables may be improperly adjusted or incorrectly routed or damaged. Be sure to correct any of these conditions before riding (see Throttle Control System Inspection and Cable, Wire, and Hose Routing section in the Appendix chapter).

⚠ WARNING

Operation with improperly adjusted, incorrectly routed or damaged cables could result in an unsafe riding condition. Follow the service manual to be make sure to correct any of these conditions.

- Check the idle speed.

Idle Speed
Standard: 1 300 ±50 r/min (rpm)

★If the idle speed is out of the specified range, adjust it.

Idle Speed Adjustment

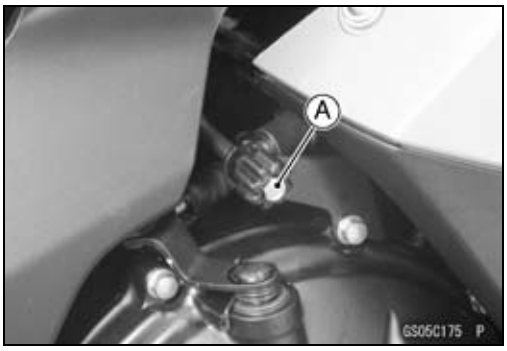

- Start the engine and warm it up thoroughly.
- Turn the adjusting screw [A] until the idle speed is correct.

○Open and close the throttle a few times to make sure that the idle speed is within the specified range. Readjust if necessary.

Periodic Maintenance Procedures

Fuel Hose Inspection (fuel leak, damage, installation condition)

○If the motorcycle is not properly handled, the high pressure inside the fuel line can cause fuel to leak [A] or the hose to burst. Remove the fuel tank (see Fuel Tank Removal in the Fuel System (DFI) chapter) and check the fuel hose.

★Replace the fuel hose if any fraying, cracks [B] or bulges [C] are noticed.

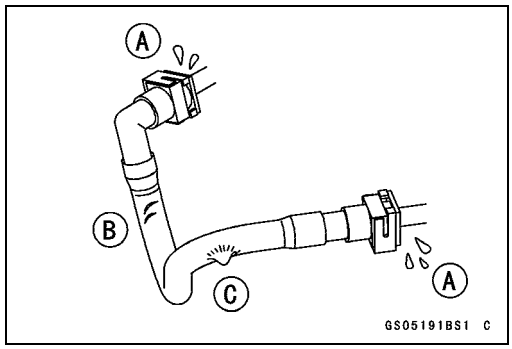

● Check that the hoses are routed correctly according to Cable, Wire, and Hose Routing section in the Appendix chapter.

★Replace the hose if it has been sharply bent or kinked.

Hose Joints [A]
Fuel Hose [B]

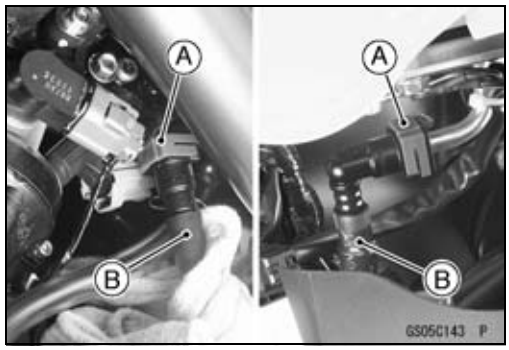

● Check that the hose joints are securely connected.

○Push and pull [A] the hose joint [B] back and forth more than 2 times, and make source it is locked.

★If it does not locked, reinstall the hose joint.

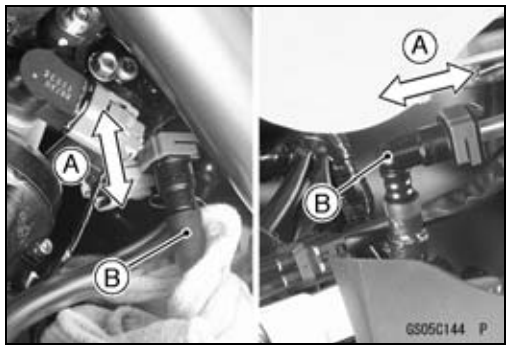

⚠ WARNING

Leaking fuel can cause a fire or explosion resulting in serious burns. Make sure the hose joint is installed correctly on the delivery pipe by sliding the joint.

Evaporative Emission Control System Inspection (CAL, SEA-B1 and TH Models)

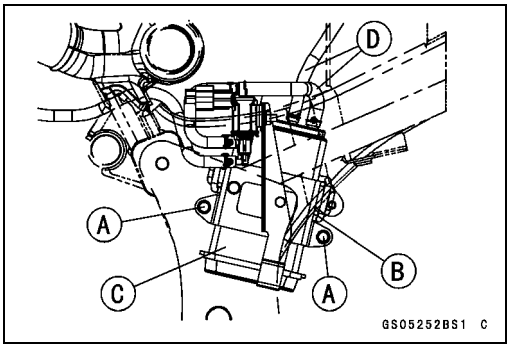

● Inspect the canister as follows.
○Remove:
Left Frame Cover (see Frame Cover Removal in the Frame chapter)
Canister Bracket Bolts [A]
○Unhook the band [B] to remove the canister [C], and disconnect the tubes [D] from the canister.
○Visually inspect the canister for cracks or other damage.
★If the canister has any cracks or bad damage, replace it with a new one.

NOTE

○*The canister is designed to work well through the motorcycle's life without any maintenance if it is used under normal conditions.*

● Inspect the purge valve (see Purge Valve Inspection in the Fuel System (DFI) chapter).
○Check that the hoses are securely connected and clips are in position.
○Replace any kinked, deteriorated or damaged hoses.
○Run the hoses according to Cable, Wire, and Hose Routing section in the Appendix chapter.
○When installing the hoses, avoid sharp bending, kinking, flattening or twisting, and run the hoses with a minimum of bending so that the emission flow will not be obstructed.

Cooling System

Coolant Level Inspection

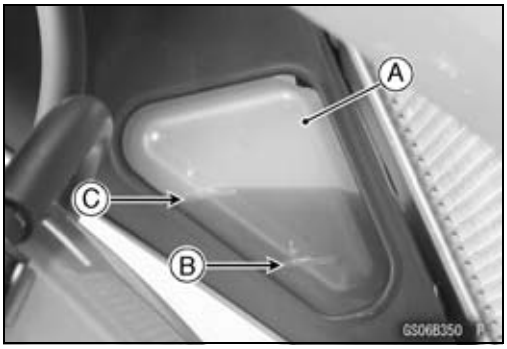

NOTE

○*Check the level when the engine is cold (room or ambient temperature).*

● Check the coolant level in the reserve tank [A] with the motorcycle held perpendicular (do not use the sidestand).
★If the coolant level is lower than the "L" level line [B], remove the right center fairing (see Center Fairing Removal in the Frame chapter), unscrew the reserve tank cap, and add coolant to the "F" level line [C].
"L": Low
"F": Full

NOTICE

For refilling, add the specified mixture of coolant and soft water. Adding water alone dilutes the coolant and degrades its anticorrosion properties. The diluted coolant can attack the aluminum engine parts. In an emergency, soft water alone can be added. But the diluted coolant must be returned to the correct mixture ratio within a few days.
If coolant must be added often or the reservoir tank has run completely dry, there is probably leakage in the cooling system. Check the system for leaks.
Coolant ruins painted surfaces. Immediately wash away any coolant that spills on the frame, engine, wheels or other painted parts.

Periodic Maintenance Procedures

Water Hose Damage and Installation Condition Inspection

○The high pressure inside the water hose can cause coolant to leak [A] or the hose to burst if the line is not properly maintained.

● Visually inspect the hoses for signs of deterioration. Squeeze the hoses. A hose should not be hard and brittle, nor should it be soft or swollen.

★Replace the hose if any fraying, cracks [B] or bulges [C] are noticed.

● Check that the hoses are securely connected and clamps are tightened correctly.

Torque - Water Hose Clamp Screws: 3.0 N·m (0.31 kgf·m, 27 in·lb)

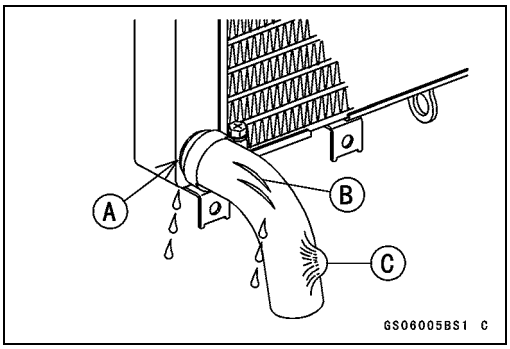

Engine Top End

Valve Clearance Inspection

NOTE

○*Valve clearance must be checked and adjusted when the engine is cold (room temperature).*

● Remove:
Cylinder Head Cover (see Cylinder Head Cover Removal in the Engine Top End chapter)
Timing Inspection Cap [A]
Timing Rotor Bolt Cap [B]

Special Tool - Filler Cap Driver [C]: 57001-1454

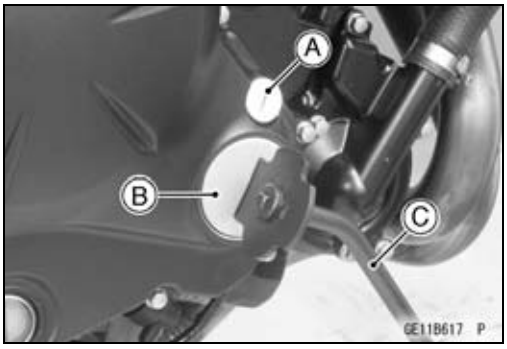

● Check the valve clearance when the pistons are at TDC.

○The pistons are numbered beginning with the engine left side.

● Using a wrench on the timing rotor bolt, turn the crankshaft clockwise until the 1/T mark line [A] on the timing rotor is aligned with the notch [B] in the edge of the timing inspection hole [C] in the clutch cover for #1 piston and 2/T mark line [D] for #2 piston.

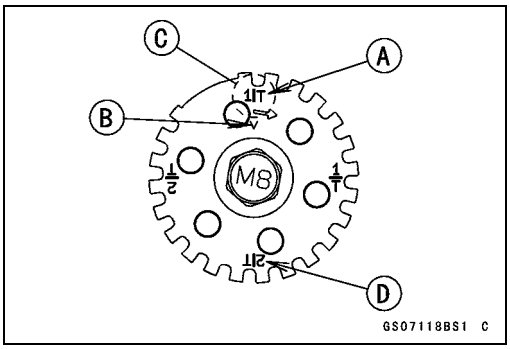

○Measure the valve clearance of the valves for which the cams [A] are turned away from each other.

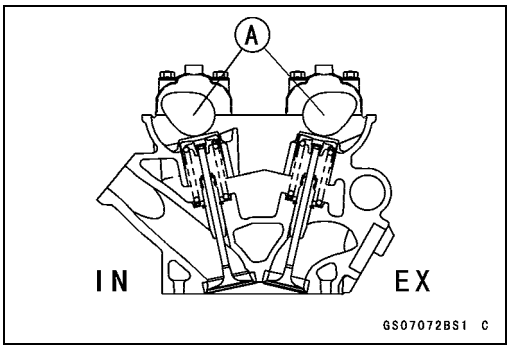

- Using the thickness gauge [A], measure the valve clearance between cam and valve lifter.

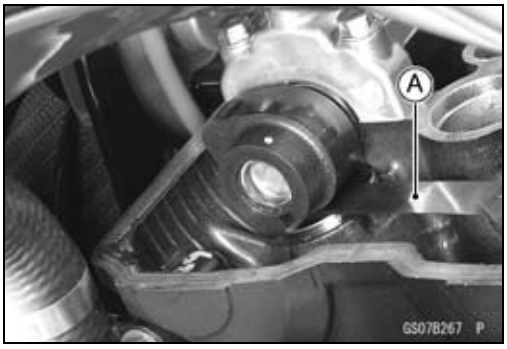

Valve Clearance
Standard:
Exhaust 0.22 ~ 0.31 mm (0.0087 ~ 0.0122 in.)
Intake 0.15 ~ 0.21 mm (0.0059 ~ 0.0083 in.)

○Each piston has two intake and two exhaust valves. Measure these two intake or exhaust valves at the same crankshaft position.

NOTE

○*Check the valve clearance using this method only. Checking the clearance at any other cam position may result in improper valve clearance.*

Valve Clearance Measuring Position
#1 Piston TDC at End of Compression Stroke:
Intake valve clearances of #1 piston, and
Exhaust valve clearances of #1 piston
#2 Piston TDC at End of Compression Stroke:
Intake valve clearances of #2 piston, and
Exhaust valve clearances of #2 piston

★If the valve clearance is not within the specified range, first record the clearance, and then adjust it.

Valve Clearance Adjustment

- To change the valve clearance, remove the camshaft chain tensioner, camshafts and valve lifters (see the Engine Top End chapter). Replace the shim with one of a different thickness.

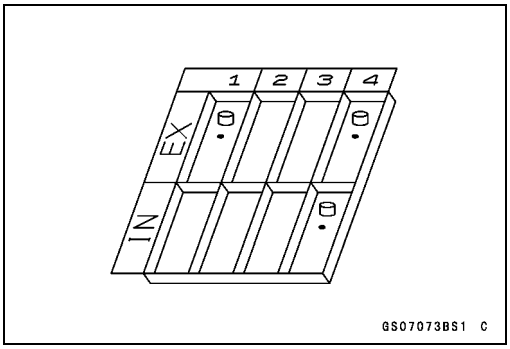

NOTE

○*Mark and record the locations of the valve lifters and shims so that they can be reinstalled in their original positions.*

- To select a new shim which brings the valve clearance within the specified range, refer to the Valve Clearance Adjustment Charts.
- Apply a thin coat of molybdenum disulfide grease to the valve lifters.
- Install the camshafts. Be sure to time the camshafts properly (see Camshaft Installation in the Engine Top End chapter).
- Remeasure any valve clearance that was adjusted. Readjust if necessary.

NOTICE

Do not put shim stock under the shim. This may cause the shim to pop out at high rpm, causing extensive engine damage.
Do not grind the shim. This may cause it to fracture, causing extensive engine damage.

Periodic Maintenance Procedures

VALVE CLEARANCE ADJUSTMENT CHART INTAKE VALVE

	PRESENT SHIM									Example											
PART No. (92180-)	1014	1016	1018	1020	1022	1024	1026	1028	1030	1032	1034	1036	1038	1040	1042	1044	1046	1048	1050	1052	1054
MARK	50	55	60	65	70	75	80	85	90	95	00	05	10	15	20	25	30	35	40	45	50
THICKNESS (mm)	2.50	2.55	2.60	2.65	2.70	2.75	2.80	2.85	2.90	2.95	3.00	3.05	3.10	3.15	3.20	3.25	3.30	3.35	3.40	3.45	3.50
VALVE CLEARANCE MEASUREMENT (Example)																					
0.00~0.01	–	–	–	–	2.50	2.55	2.60	2.65	2.70	2.75	2.80	2.85	2.90	2.95	3.00	3.05	3.10	3.15	3.20	3.25	3.30
0.02~0.06	–	–	–	2.50	2.55	2.60	2.65	2.70	2.75	2.80	2.85	2.90	2.95	3.00	3.05	3.10	3.15	3.20	3.25	3.30	3.35
0.07~0.11	–	–	2.50	2.55	2.60	2.65	2.70	2.75	2.80	2.85	2.90	2.95	3.00	3.05	3.10	3.15	3.20	3.25	3.30	3.35	3.40
0.12~0.14	–	2.50	2.55	2.60	2.65	2.70	2.75	2.80	2.85	2.90	2.95	3.00	3.05	3.10	3.15	3.20	3.25	3.30	3.35	3.40	3.45
0.15~0.21	SPECIFIED CLEARANCE/NO CHANGE REQUIRED																				
0.22~0.24	2.55	2.60	2.65	2.70	2.75	2.80	2.85	2.90	2.95	3.00	3.05	3.10	3.15	3.20	3.25	3.30	3.35	3.40	3.45	3.50	
0.25~0.29	2.60	2.65	2.70	2.75	2.80	2.85	2.90	2.95	3.00	3.05	3.10	3.15	3.20	3.25	3.30	3.35	3.40	3.45	3.50		
0.30~0.34	2.65	2.70	2.75	2.80	2.85	2.90	2.95	3.00	3.05	3.10	3.15	3.20	3.25	3.30	3.35	3.40	3.45	3.50			
0.35~0.39	2.70	2.75	2.80	2.85	2.90	2.95	3.00	3.05	3.10	3.15	3.20	3.25	3.30	3.35	3.40	3.45	3.50				
0.40~0.44	2.75	2.80	2.85	2.90	2.95	3.00	3.05	3.10	3.15	3.20	3.25	3.30	3.35	3.40	3.45	3.50					
0.45~0.49	2.80	2.85	2.90	2.95	3.00	3.05	3.10	3.15	3.20	3.25	3.30	3.35	3.40	3.45	3.50						
0.50~0.54	2.85	2.90	2.95	3.00	3.05	3.10	3.15	3.20	3.25	3.30	3.35	3.40	3.45	3.50							
0.55~0.59	2.90	2.95	3.00	3.05	3.10	3.15	3.20	3.25	3.30	3.35	3.40	3.45	3.50								
0.60~0.64	2.95	3.00	3.05	3.10	3.15	3.20	3.25	3.30	3.35	3.40	3.45	3.50									
0.65~0.69	3.00	3.05	3.10	3.15	3.20	3.25	3.30	3.35	3.40	3.45	3.50										
0.70~0.74	3.05	3.10	3.15	3.20	3.25	3.30	3.35	3.40	3.45	3.50											
0.75~0.79	3.10	3.15	3.20	3.25	3.30	3.35	3.40	3.45	3.50												
0.80~0.84	3.15	3.20	3.25	3.30	3.35	3.40	3.45	3.50													
0.85~0.89	3.20	3.25	3.30	3.35	3.40	3.45	3.50														
0.90~0.94	3.25	3.30	3.35	3.40	3.45	3.50															
0.95~0.99	3.30	3.35	3.40	3.45	3.50																
1.00~1.04	3.35	3.40	3.45	3.50																	
1.05~1.09	3.40	3.45	3.50																		
1.10~1.14	3.45	3.50																			
1.15~1.19	3.50																				

INSTALL THE SHIM OF THIS THICKNESS (mm)

GS07119BW3 C

1. Measure the clearance (when engine is cold).
2. Check present shim size.
3. Match clearance in vertical column with present shim size in horizontal column.
4. Install the shim specified where the lines intersect. This shim will give the proper clearance.

Example: Present shim is **2.95 mm.**
Measured clearance is **0.42 mm.**
Replace **2.95 mm** shim with **3.20 mm** shim.

5. Remeasure the valve clearance and readjust if necessary.

VALVE CLEARANCE ADJUSTMENT CHART EXHAUST VALVE

	PRESENT SHIM									Example											
PART No. (92180-)	1014	1016	1018	1020	1022	1024	1026	1028	1030	1032	1034	1036	1038	1040	1042	1044	1046	1048	1050	1052	1054
MARK	50	55	60	65	70	75	80	85	90	95	00	05	10	15	20	25	30	35	40	45	50
THICKNESS (mm)	2.50	2.55	2.60	2.65	2.70	2.75	2.80	2.85	2.90	2.95	3.00	3.05	3.10	3.15	3.20	3.25	3.30	3.35	3.40	3.45	3.50
0.00~0.04	–	–	–	–	–	2.50	2.55	2.60	2.65	2.70	2.75	2.80	2.85	2.90	2.95	3.00	3.05	3.10	3.15	3.20	3.25
0.05~0.09	–	–	–	–	2.50	2.55	2.60	2.65	2.70	2.75	2.80	2.85	2.90	2.95	3.00	3.05	3.10	3.15	3.20	3.25	3.30
0.10~0.14	–	–	–	2.50	2.55	2.60	2.65	2.70	2.75	2.80	2.85	2.90	2.95	3.00	3.05	3.10	3.15	3.20	3.25	3.30	3.35
0.15~0.19	–	–	2.50	2.55	2.60	2.65	2.70	2.75	2.80	2.85	2.90	2.95	3.00	3.05	3.10	3.15	3.20	3.25	3.30	3.35	3.40
0.20~0.21	–	2.50	2.55	2.60	2.65	2.70	2.75	2.80	2.85	2.90	2.95	3.00	3.05	3.10	3.15	3.20	3.25	3.30	3.35	3.40	3.45
0.22~0.31	SPECIFIED CLEARANCE/NO CHANGE REQUIRED																				
0.32~0.34	2.55	2.60	2.65	2.70	2.75	2.80	2.85	2.90	2.95	3.00	3.05	3.10	3.15	3.20	3.25	3.30	3.35	3.40	3.45	3.50	
0.35~0.39	2.60	2.65	2.70	2.75	2.80	2.85	2.90	2.95	3.00	3.05	3.10	3.15	3.20	3.25	3.30	3.35	3.40	3.45	3.50		
0.40~0.44	2.65	2.70	2.75	2.80	2.85	2.90	2.95	3.00	3.05	3.10	3.15	3.20	3.25	3.30	3.35	3.40	3.45	3.50			
0.45~0.49	2.70	2.75	2.80	2.85	2.90	2.95	3.00	3.05	3.10	3.15	3.20	3.25	3.30	3.35	3.40	3.45	3.50				
0.50~0.54	2.75	2.80	2.85	2.90	2.95	3.00	3.05	3.10	3.15	3.20	3.25	3.30	3.35	3.40	3.45	3.50					
0.55~0.59	2.80	2.85	2.90	2.95	3.00	3.05	3.10	3.15	3.20	3.25	3.30	3.35	3.40	3.45	3.50						
0.60~0.64	2.85	2.90	2.95	3.00	3.05	3.10	3.15	3.20	3.25	3.30	3.35	3.40	3.45	3.50							
0.65~0.69	2.90	2.95	3.00	3.05	3.10	3.15	3.20	3.25	3.30	3.35	3.40	3.45	3.50								
0.70~0.74	2.95	3.00	3.05	3.10	3.15	3.20	3.25	3.30	3.35	3.40	3.45	3.50									
0.75~0.79	3.00	3.05	3.10	3.15	3.20	3.25	3.30	3.35	3.40	3.45	3.50										
0.80~0.84	3.05	3.10	3.15	3.20	3.25	3.30	3.35	3.40	3.45	3.50											
0.85~0.89	3.10	3.15	3.20	3.25	3.30	3.35	3.40	3.45	3.50												
0.90~0.94	3.15	3.20	3.25	3.30	3.35	3.40	3.45	3.50													
0.95~0.99	3.20	3.25	3.30	3.35	3.40	3.45	3.50														
1.00~1.04	3.25	3.30	3.35	3.40	3.45	3.50															
1.05~1.09	3.30	3.35	3.40	3.45	3.50																
1.10~1.14	3.35	3.40	3.45	3.50																	
1.15~1.19	3.40	3.45	3.50																		
1.20~1.24	3.45	3.50																			
1.25~1.29	3.50																				

VALVE CLEARANCE MEASUREMENT (Example)

INSTALL THE SHIM OF THIS THICKNESS (mm)

GS07120BW3 C

1. Measure the clearance (when engine is cold).
2. Check present shim size.
3. Match clearance in vertical column with present shim size in horizontal column.
4. Install the shim specified where the lines intersect. This shim will give the proper clearance.

Example: Present shim is **2.95 mm.**
Measured clearance is **0.47 mm.**
Replace **2.95 mm** shim with **3.15 mm** shim.

5. Remeasure the valve clearance and readjust if necessary.

Periodic Maintenance Procedures

Air Suction System Damage Inspection

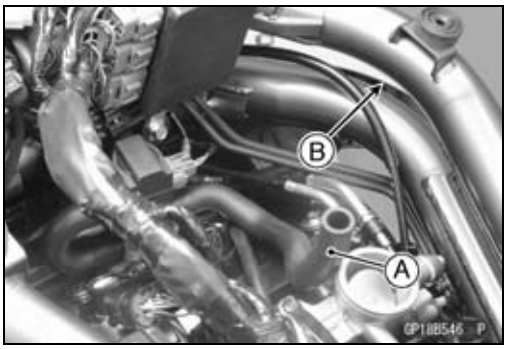

- Remove:
  Fuel Tank (see Fuel Tank Removal in the Fuel System (DFI) chapter)
  Air Cleaner Housing (see Air Cleaner Housing Removal in the Fuel System (DFI) chapter)
- Take the air switching valve hose end [A] outside of the frame [B].

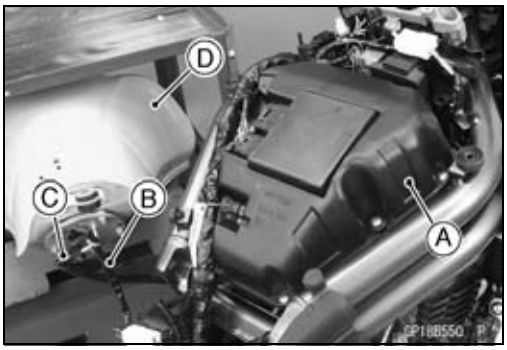

- Reinstall the air cleaner housing [A] (see Air Cleaner Housing Installation in the Fuel System (DFI) chapter).
- Connect the fuel pump lead connector [B].
- Using the extension tube [C], connect the fuel tank [D] to the throttle body.

  Special Tool - Extension Tube: 57001-1578

- Start the engine and run it at idle speed.
- Plug the air switching valve hose end with your finger and feel vacuum pulsing in the hose.

★If there is no vacuum pulsation, check the hose line for leak. If there is no leak, check the air switching valve (see Air Switching Valve Unit Test in the Electrical System chapter) or air suction valve (see Air Suction Valve Inspection in the Engine Top End chapter).

- Remove:
  Extension Tube
  Fuel Pump Lead Connector (Disconnect)
- Remove the air cleaner housing (see Air Cleaner Housing Removal in the Fuel System (DFI) chapter).

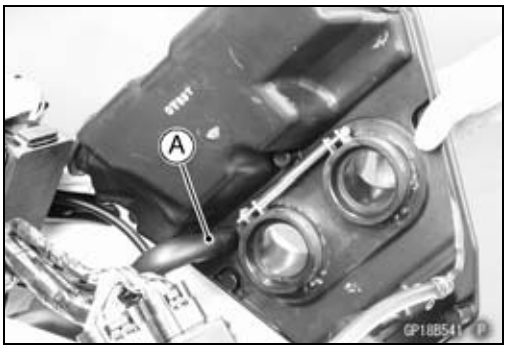

- Apply a soap and water solution or rubber lubricant to the end of the air switching valve hose [A] and install the hose on the fitting.
- Install:
  Air Cleaner Housing (see Air Cleaner Housing Installation in the Fuel System (DFI) chapter)
  Fuel Tank (see Fuel Tank Installation in the Fuel System (DFI) chapter).

Clutch

Clutch Operation Inspection

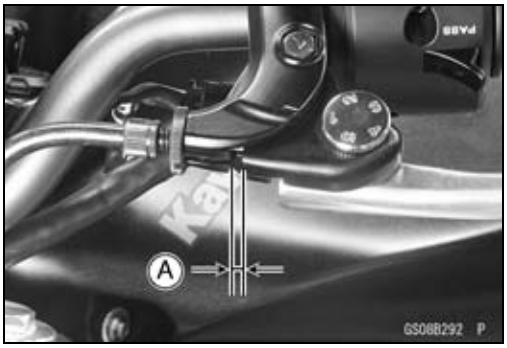

- Pull the clutch lever just enough to take up the free play [A].
- Measure the gap between the lever and the lever holder.

  Clutch Lever Free Play
  Standard: 2 ~ 3 mm (0.08 ~ 0.12 in.)

★If the gap is too wide, the clutch may not release fully. If the gap is too narrow, the clutch may not engage fully. In either case, adjust it.

Periodic Maintenance Procedures

⚠ WARNING

The engine and exhaust system get extremely hot during normal operation and can cause serious burns. Never touch the engine or exhaust pipe during clutch adjustment.

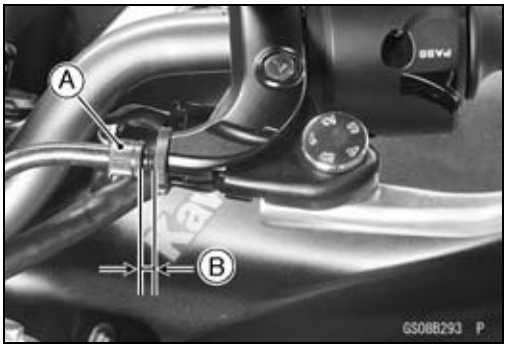

- Turn the adjuster [A] so that 5 ~ 6 mm (0.20 ~ 0.24 in.) [B] of threads are visible.

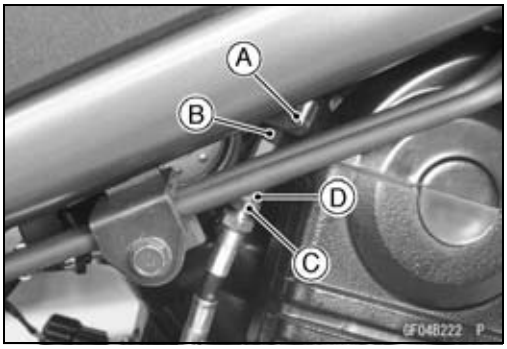

- Remove the right middle fairing (see Middle Fairing Removal in the Frame chapter).
- Open the clamp [A].
- Slide the dust cover [B] out of place.
- Loosen the locknut [C].
- Turn the adjusting nut [D] until the free play is correct.

⚠ WARNING

Too much cable play can prevent clutch disengagement and cause an accident resulting in serious injury or death. When adjusting the clutch or replacing the cable, be sure the upper end of the clutch outer cable is fully seated in its fitting, or it could slip into place later, creating enough cable play to prevent clutch disengagement.

- Tighten the locknut, and slip the dust cover back onto place.
- After the adjustment, start the engine and check that the clutch does not slip and that it releases properly.

Wheels/Tires

Air Pressure Inspection

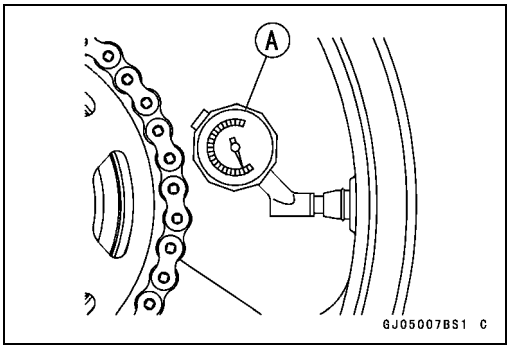

- Remove the air valve cap.
- Measure the tire air pressure with an air pressure gauge [A] when the tires are cold (that is, when the motorcycle has not been ridden more than a mile during the past 3 hours).

Air Pressure (when Cold)

Front:	**Up to 200 kg (441 lb)** **225 kPa (2.25 kgf/cm², 32 psi)**
Rear:	**Up to 200 kg (441 lb)** **250 kPa (2.50 kgf/cm², 36 psi)**

★Adjust the tire air pressure according to the specifications if necessary.

- Install the air valve cap.

Periodic Maintenance Procedures

Wheel/Tire Damage Inspection

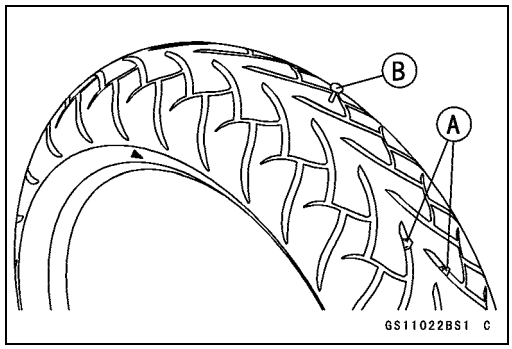

- Remove any imbedded stones [A] or other foreign particles [B] from tread.
- Visually inspect the tire for cracks and cuts, and replace the tire if necessary. Swelling or high spots indicate internal damage, requiring tire replacement.
- Visually inspect the wheel for cracks, cuts and dents damage.

★If any damage is found, replace the wheel.

Tire Tread Wear, Abnormal Wear Inspection

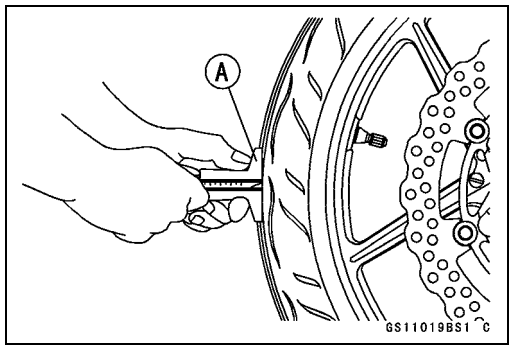

As the tire tread wears down, the tire becomes more susceptible to puncture and failure. An accepted estimate is that 90% of all tire failures occur during the last 10% of tread life (90% worn). So it is false economy and unsafe to use the tires until they are bald.

- Measure the tread depth at the center of the tread with a depth gauge [A]. Since the tire may wear unevenly, take measurement at several places.

Tread Depth

Standard:

Front	**4.5 mm (0.18 in.)**
Rear	**6.4 mm (0.25 in.)**

Service Limit:

Front	**1 mm (0.04 in.)** **(AT, CH, DE) 1.6 mm (0.06 in.)**
Rear	**2 mm (0.08 in.)** **(Up to 130 km/h (80 mph))**
	3 mm (0.12 in.) **(Over 130 km/h (80 mph))**

★If any measurement is less than the service limit, replace the tire (see Tire Removal/Installation in the Wheels/Tires chapter).

⚠ WARNING

Some replacement tires may adversely affect handling and cause an accident resulting in serious injury or death. To ensure proper handling and stability, use only the recommended standard tires for replacement, inflated to the standard pressure.

NOTE

○*Most countries may have their own regulations a minimum tire tread depth: be sure to follow them.*

○*Check and balance the wheel when a tire is replaced with a new one.*

Wheel Bearing Damage Inspection

- Raise the front wheel off the ground with the jack.

  Special Tool - Jack: 57001-1238
- Turn the handlebar all the way to the right or left.
- Inspect the roughness of the front wheel bearing by pushing and pulling [A] the wheel.
- Spin [B] the front wheel lightly, and check for smoothly turn, roughness, binding or noise.

★If roughness, binding or noise is found, remove the front wheel and inspect the wheel bearing (see Front Wheel Removal, Hub Bearing Inspection in the Wheels/Tires chapter).

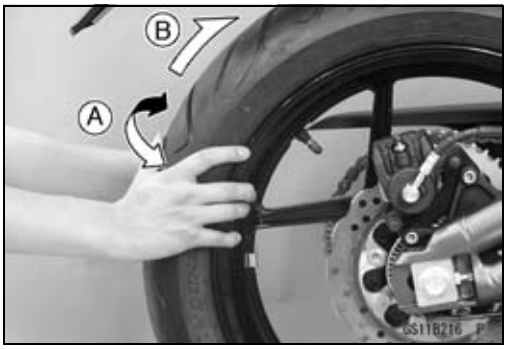

- Raise the rear wheel off the ground with the stand (see Rear Wheel Removal in the Wheels/Tires chapter).
- Inspect the roughness of the rear wheel bearing by pushing and pulling [A] the wheel.
- Spin [B] the rear wheel lightly, and check for smoothly turn, roughness, binding or noise.

★If roughness, binding or noise is found, remove the rear wheel and inspect the wheel bearing (see Rear Wheel Removal, Hub Bearing Inspection in the Wheels/Tires chapter) and coupling (see Coupling Bearing Inspection in the Final Drive chapter).

Final Drive

Drive Chain Lubrication Condition Inspection

- If a special lubricant is not available, a heavy oil such as SAE 90 is preferred to a lighter oil because it will stay on the chain longer and provide better lubrication.
- If the chain appears especially dirty, clean it before lubrication.

NOTICE

The O-rings between the side plates seal in the lubricant between the pin and the bushing. To avoid damaging the O-rings and resultant loss of lubricant, observe the following rules.
Use only kerosene or diesel oil for cleaning an O-ring of the drive chain. Any other cleaning solution such as gasoline will cause deterioration and swelling of the O-ring. Immediately blow the chain dry with compressed air after cleaning. Complete cleaning and drying the chain within 10 minutes.

Periodic Maintenance Procedures

- Apply oil to the sides of the rollers so that oil will penetrate to the rollers and bushings. Apply the oil to the O-rings so that the O-rings will be coated with oil.
- Wipe off any excess oil.
  Oil Applied Areas [A]
  O-rings [B]

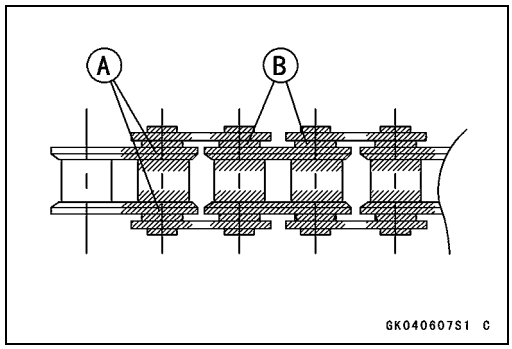

Drive Chain Slack Inspection

NOTE

○*Check the slack with the motorcycle setting on its side-stand.*
○*Clean the chain if it is dirty, and lubricate it if it appears dry.*

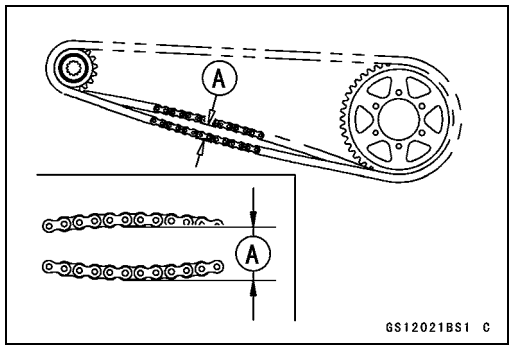

- Check the wheel alignment (see Wheel Alignment Inspection).
- Rotate the rear wheel to find the position where the chain is tightest.
- Measure the vertical movement (chain slack) [A] midway between the sprockets.

Drive Chain Slack
Standard: 25 ~ 35 mm (1.0 ~ 1.4 in.)

★If the chain slack is not within the standard, adjust it.

Drive Chain Slack Adjustment

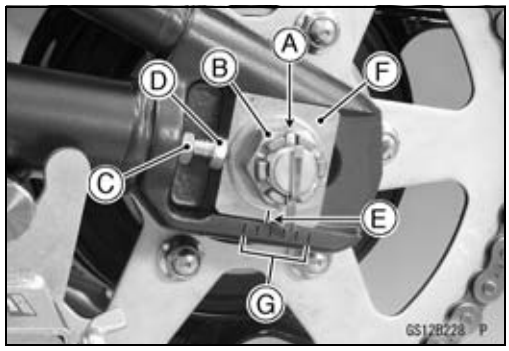

- Raise the rear wheel off the ground with the stand.
- Remove the cotter pin [A], and loosen the axle nut [B].
- Loosen the both chain adjuster locknuts [C].

★If the chain is too loose, turn out the right and left chain adjusters [D] evenly.
★If the chain is too tight, turn in the right and left chain adjusters evenly, and kick the wheel forward.

- Turn the both chain adjusters evenly until the drive chain has the correct amount of slack. To keep the chain and wheel properly aligned, the notch [E] on the left wheel alignment indicator [F] should align with the same swingarm mark or position [G] that the right indicator notch aligns with.

⚠ WARNING

Misalignment of the wheel will result in abnormal wear and may result in an unsafe riding condition. Be sure the wheel is properly aligned.

- Tighten the both chain adjuster locknuts securely.
- Tighten:

Torque - Rear Axle Nut: 108 N·m (11.0 kgf·m, 80 ft·lb)

- Turn the wheel, measure the chain slack again at the tightest position, and readjust if necessary.

● Insert a new cotter pin [A].

NOTE

○*When inserting the cotter pin, if the slots in the nut do not align with the cotter pin hole in the axle, tighten the nut clockwise [B] up to next alignment.*
○*It should be within 30 degrees.*
○*Loosen once and tighten again when the slot goes past the nearest hole.*

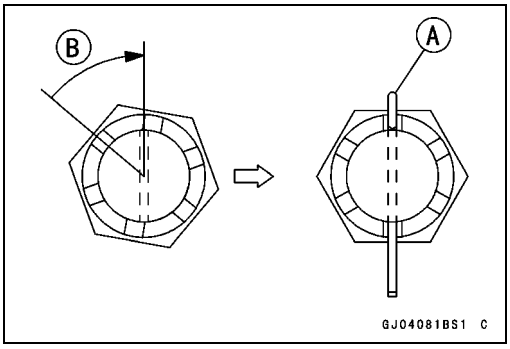

● Bend the cotter pin [A] over the nut.

⚠ WARNING

A loose axle nut can lead to an accident resulting in serious injury or death. Tighten the axle nut to the proper torque and install a new cotter pin.

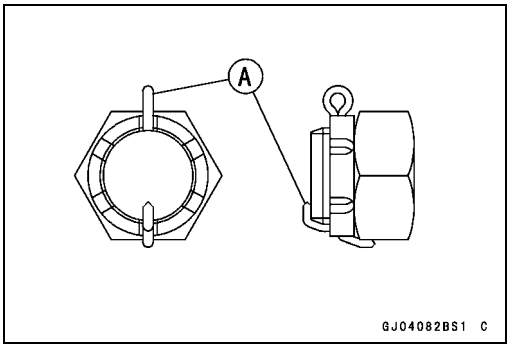

Wheel Alignment Inspection

● Check that the notch [A] on the left wheel alignment indicator [B] aligns with the same swingarm mark or position [C] that the right wheel alignment indicator notch aligns with.

★If they do not, adjust the chain slack and align the wheel alignment (see Drive Chain Slack Adjustment).

NOTE

○*Wheel alignment can be also checked using the straightedge or string method.*

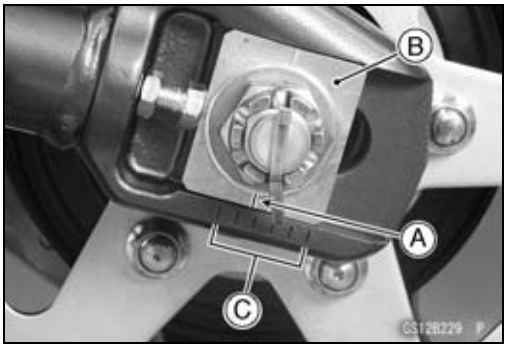

⚠ WARNING

Misalignment of the wheel will result in abnormal wear and may result in an unsafe riding condition. Be sure the wheel is properly aligned.

Periodic Maintenance Procedures

Drive Chain Wear Inspection

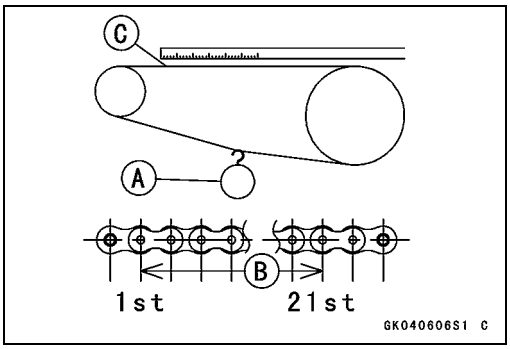

- Remove the chain cover (see Swingarm Removal in the Suspension chapter).
- Rotate the rear wheel to inspect the drive chain for damaged rollers, and loose pins and links.

★If there is any irregularity, replace the drive chain.

★Lubricate the drive chain if it appears dry.

- Stretch the chain taut by hanging a 98 N (10 kg, 20 lb) weight [A] on the chain.
- Measure the length of 20 links [B] on the straight part [C] of the chain from the pin center of the 1st pin to the pin center of the 21st pin. Since the chain may wear unevenly, take measurements at several places.

★If any measurements exceed the service limit, replace the chain. Also, replace the front and rear sprockets when the drive chain is replaced.

Drive Chain 20-link Length

Standard: 317.5 ~ 318.2 mm (12.50 ~ 12.53 in.)

Service Limit: 323 mm (12.7 in.)

⚠ WARNING

A chain that breaks or jumps off the sprockets could snag on the engine sprocket or lock the rear wheel, severely damaging the motorcycle and causing it to go out of control. Inspect the chain for damage and proper adjustment before each ride. If chain wear exceeds the service limit, replace it with the standard chain. It is an endless type and should not be cut for installation.

Standard Chain

Make: DAIDO

Type: DID 520VP2-T

Link: 114 links

Chain Guide Inspection

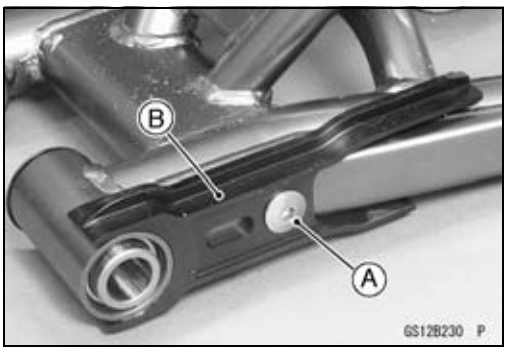

- Visually inspect the chain guide on the swingarm.

★Replace the chain guide if it shows any signs of abnormal wear or damage.

○Remove:

Swingarm (see Swingarm Removal in the Suspension chapter)

Chain Guide Bolt [A]

Chain Guide [B]

○Installation is the reverse of removal.

Brake System

Brake Fluid Leak (Brake Hose and Pipe) Inspection

- For models equipped with an ABS, remove the right swingarm bracket (see ABS Hydraulic Unit Removal in the Brakes chapter).
- Apply the brake lever or pedal, and inspect the brake fluid leak from the brake hoses [A], pipes (ABS equipped models) [B] and fittings [C].

★If the brake fluid leaked from any position, inspect or replace the problem part.

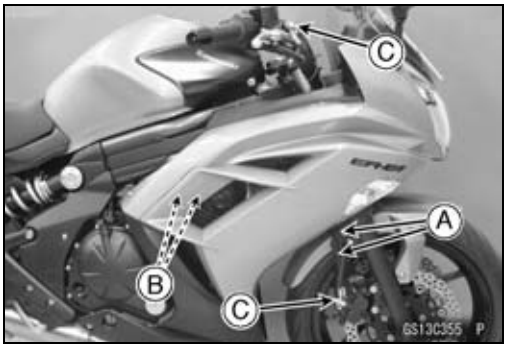

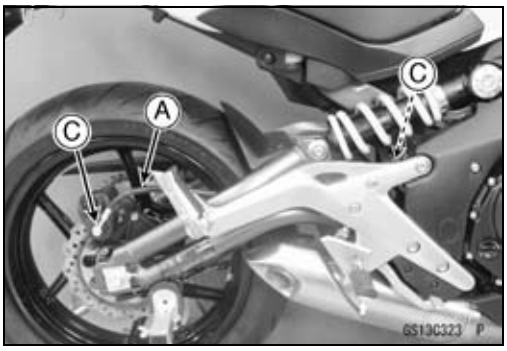

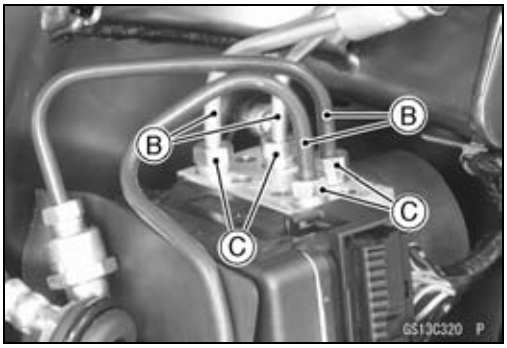

Brake Hose and Pipe Damage and Installation Condition Inspection

- For models equipped with an ABS, remove the right swingarm bracket (see ABS Hydraulic Unit Removal in the Brakes chapter).
- Inspect the brake hoses, fittings and pipes (ABS equipped models) for deterioration, cracks and signs of leakage.

○The high pressure inside the brake line can cause fluid to leak [A] or the hose, pipes (ABS equipped models) to burst if the line is not properly maintained. Bend and twist the rubber hose while examining it.

★Replace the hose and pipe (ABS equipped models) if any crack [B], bulge [C] or leakage is noticed.

★Tighten any brake hose banjo bolts and brake pipe joint nuts.

Torque - Brake Hose Banjo Bolts: 25 N·m (2.5 kgf·m, 18 ft·lb)
Brake Pipe Joint Nuts: 18 N·m (1.8 kgf·m, 13 ft·lb) (ABS Equipped Models)

- Inspect the brake hose routing.

★If any brake hose and pipe (ABS equipped models) routing is incorrect, correct the routing according to Cable, Wire, and Hose Routing section in the Appendix chapter.

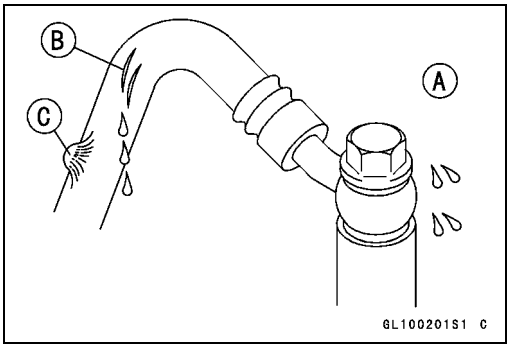

Periodic Maintenance Procedures

Brake Fluid Level Inspection

● Check that the brake fluid level in the front brake reservoir [A] is above the lower level line [B].

NOTE

○*Hold the reservoir horizontal by turning the handlebar when checking brake fluid level.*

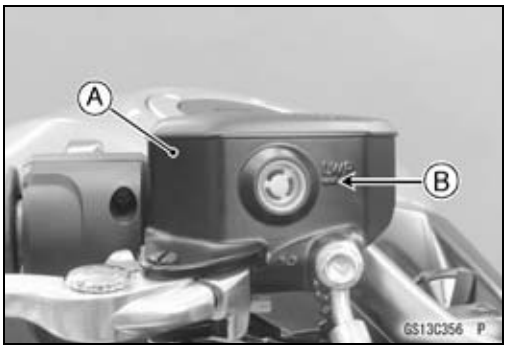

★If the fluid level is lower than the lower level line, remove the reservoir cap and fill the reservoir to the upper level line [A].

● Tighten:

Torque - Front Brake Reservoir Cap Screws: 1.5 N·m (0.15 kgf·m, 13 in·lb)

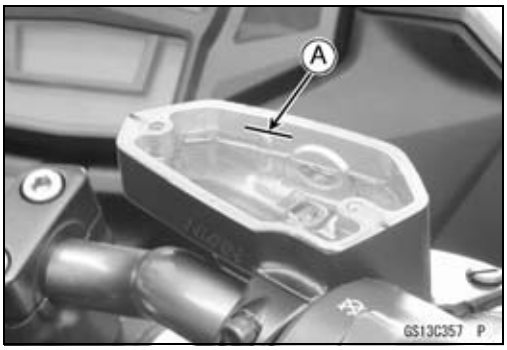

● Check that the brake fluid level in the rear brake reservoir [A] is above the lower level line [B].

★If the fluid level is lower than the lower level line, remove the front seat (see Front Seat Removal in the Frame chapter) and fill the reservoir to the upper level line [C].

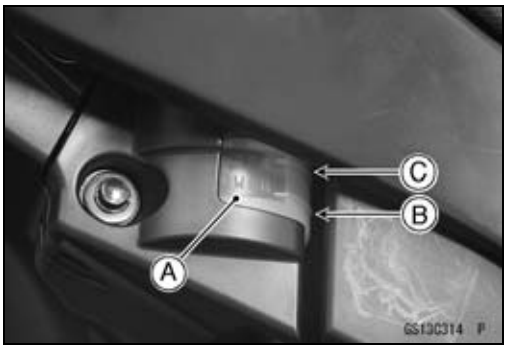

⚠ WARNING

Mixing brands and types of brake fluid can reduce the brake system's effectiveness and cause an accident resulting in injury or death. Do not mix two brands of brake fluid. Change the brake fluid in the brake line completely if the brake fluid must be refilled but the type and brand of the brake fluid that is already in the reservoir are unidentified.

Recommended Disc Brake Fluid
Grade: DOT4

● Follow the procedure below to install the rear brake fluid reservoir cap correctly.

○First, tighten the rear brake fluid reservoir cap [B] clockwise [C] by hand until slight resistance is felt indicating that the cap is seated on the reservoir body, then tighten the cap an additional 1/6 turn [D] while holding the brake fluid reservoir body [A].

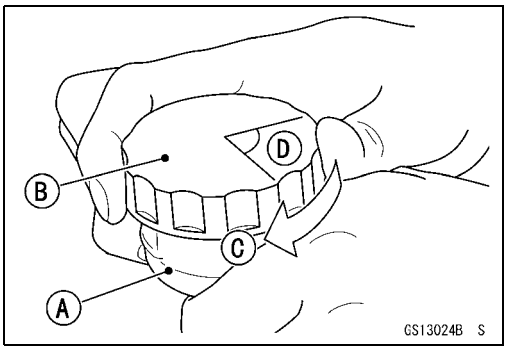

Periodic Maintenance Procedures

Brake Pad Wear Inspection

- Check the lining thickness [A] of the pads in each caliper.

Pad Lining Thickness
Standard:

Front [C]	**4.5 mm (0.18 in.)**
Rear [D]	**5.0 mm (0.20 in.)**
Service Limit:	**1 mm (0.04 in.)**

★If the lining thickness of either pad is less than the service limit [B], replace both pads in the caliper as a set.

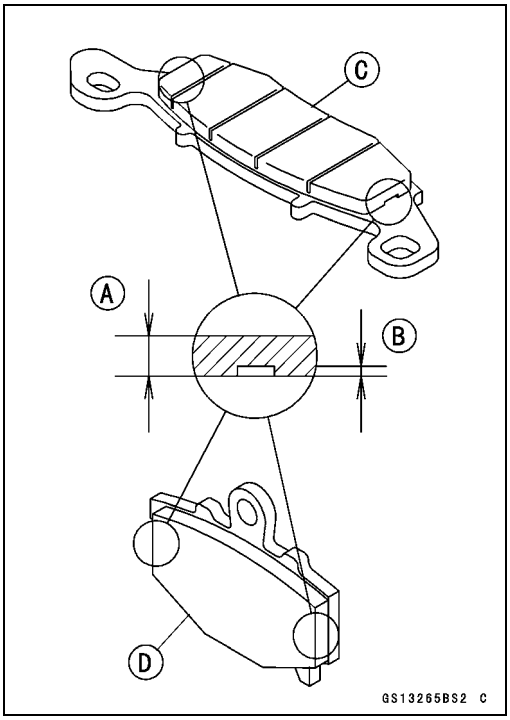

Brake Operation Inspection

- Inspect the operation of the front and rear brake by running the vehicle on the dry road.

★If the brake operation is insufficient, inspect the brake system.

⚠ WARNING

When test riding the vehicle, be aware of surrounding traffic for your safety.

Brake Light Switch Operation Inspection

- Turn the ignition switch to ON.
- The brake light [A] should go on when the brake lever is applied or after the brake pedal is depressed about **10 mm (0.39 in.)**.

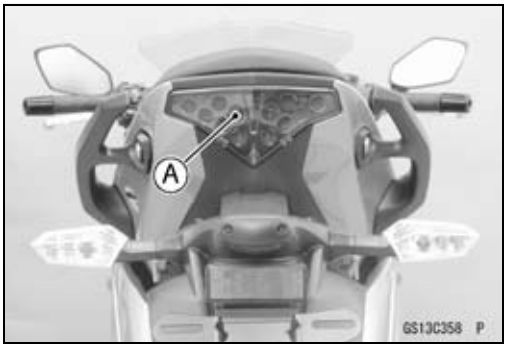

★If it does not, adjust the brake light switch.

- Remove the right frame cover (see Frame Cover Removal in the Frame chapter).
- While holding the switch body [A], turn the adjusting nut [B] to adjust the switch.
  Light sooner as the body rises [C]
  Light later as the body lowers [D]

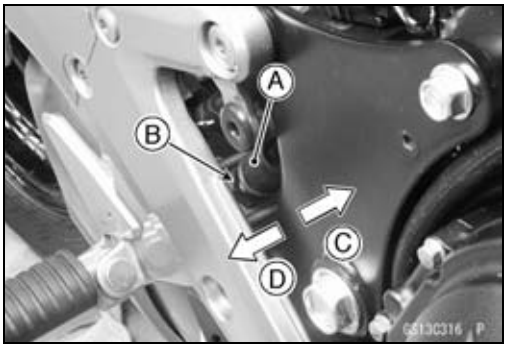

NOTICE

To avoid damaging the electrical connections inside the switch, be sure that the switch body does not turn during adjustment.

Periodic Maintenance Procedures

★If it does not go on, inspect or replace the following items.
Battery (see Charging Condition Inspection in the Electrical System chapter)
Brake Light (see Tail/Brake Light (LED) Unit Removal in the Electrical System chapter)
Main Fuse 30 A and Brake/Horn Fuse 10 A (see Fuse Inspection in the Electrical System chapter)
Front Brake Light Switch [A] (see Switch Inspection in the Electrical System chapter)
Rear Brake Light Switch (see Switch Inspection in the Electrical System chapter)
Harness (see Wiring Inspection in the Electrical System chapter)

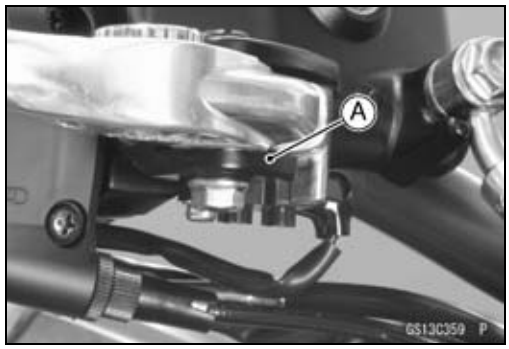

Suspensions

Front Forks/Rear Shock Absorber Operation Inspection

● Pump the forks down and up [A] 4 or 5 times to inspect the smooth stroke.
★If the forks do not smoothly stroke or noise is found, inspect the fork oil level or fork clamps (see Front Fork Oil Change in the Suspension chapter).

● Pump the seat down and up [A] 4 or 5 times to inspect the smooth stroke.
★If the shock absorber does not smoothly stroke or noise is found, inspect the oil leak (see Rear Shock Absorber Oil Leak Inspection).

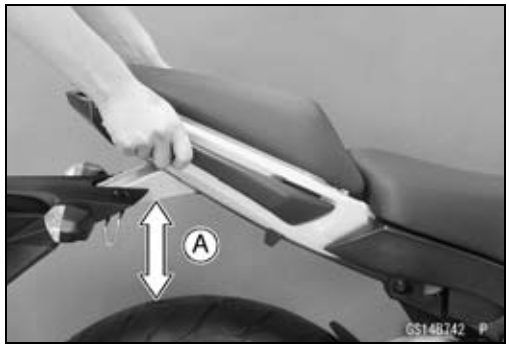

Front Fork Oil Leak Inspection

● Visually inspect the front forks [A] for oil leakage.
★Replace or repair any defective parts if necessary.

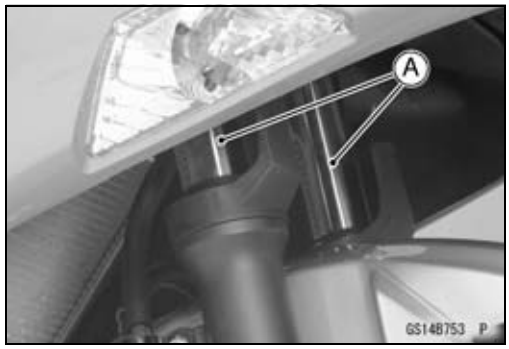

Rear Shock Absorber Oil Leak Inspection

- Visually inspect the shock absorber [A] for oil leakage.

★If the oil leakage is found on it, replace the shock absorber with a new one.

Steering System

Steering Play Inspection

- Raise the front wheel off the ground using the jack.

  Special Tool - Jack: 57001-1238
- With the front wheel pointing straight ahead, alternately tap each end of the handlebar. The front wheel should swing fully left and right from the force of gravity until the fork hits the stop.

★If the wheel binds or catches before the stop, the steering is too tight.

- Feel for steering looseness by pushing and pulling [A] the forks.

★If you feel looseness, the steering is too loose.

NOTE

○*The cables and wiring will have some effect on the motion of the fork which must be taken into account.*
○*Be sure the leads and cables are properly routed.*
○*The bearings must be in good condition and properly lubricated in order for any test to be valid.*

Steering Play Adjustment

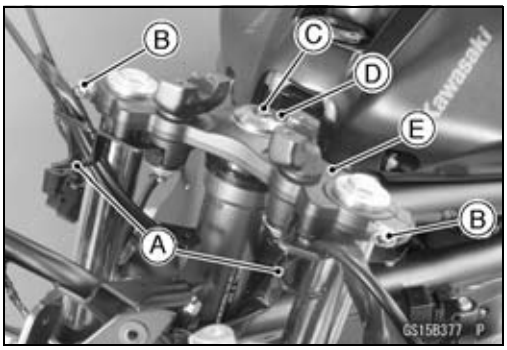

- Remove:
  Handlebar (see Handlebar Removal in the Steering chapter)
  Upper Inner Fairings (see Upper Inner Fairing Removal in the Frame chapter)
- Clear the cables from the guides [A].
- Loosen the upper front fork clamp bolts [B].
- Remove:
  Steering Stem Head Bolt Plug [C]
  Steering Stem Head Bolt [D] and Washer
  Steering Stem Head [E]

Periodic Maintenance Procedures

- Bend the claws [A] of the claw washer straighten.
- Remove the steering stem locknut [B] and claw washer.

Special Tool - Steering Stem Nut Wrench: 57001-1100

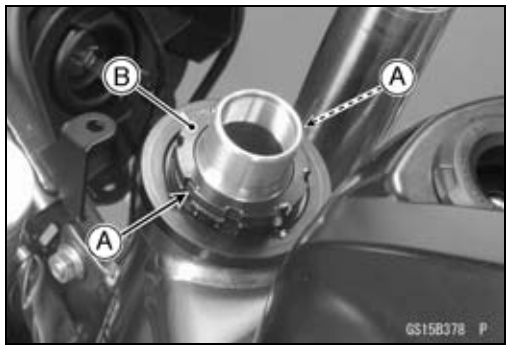

- Adjust the steering.

Special Tool - Steering Stem Nut Wrench [A]: 57001-1100

★If the steering is too tight, loosen the stem nut [B] a fraction of a turn.

★If the steering is too loose, tighten the stem nut a fraction of a turn.

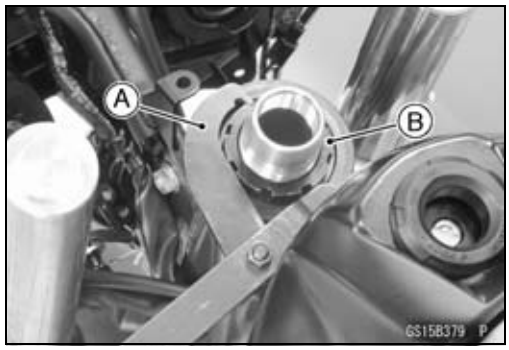

NOTE

○*Turn the stem nut 1/8 turn at time maximum.*

- Install the new claw washer [A] so that its bent claws [B] face upward, and engage the bent claws with the grooves of stem locknut [C].
- Hand tighten the stem locknut until it touches the claw washer.
- Hand tighten the stem locknut clockwise until the claws are aligned with the grooves (ranging from 2nd to 4th) of stem nut [D], and bend the 2 claws downward [E].
- Install:
  Steering Stem Head
  Washer
  Steering Stem Head Bolt
- Tighten:

Torque - Steering Stem Head Bolt: 108 N·m (11.0 kgf·m, 80 ft·lb)
Front Fork Clamp Bolts (Upper): 20 N·m (2.0 kgf·m, 15 ft·lb)

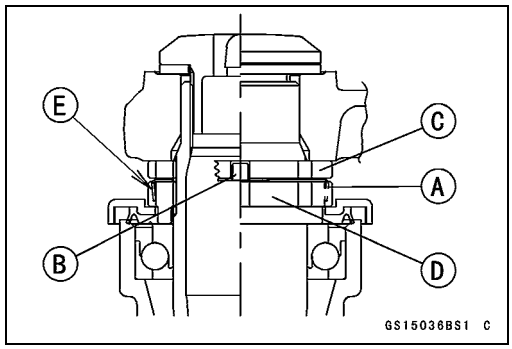

- Check the steering again.

★If the steering is still too tight or too loose, repeat the adjustment.

- Install the other removal parts (see appropriate chapters).

Periodic Maintenance Procedures

Steering Stem Bearing Lubrication

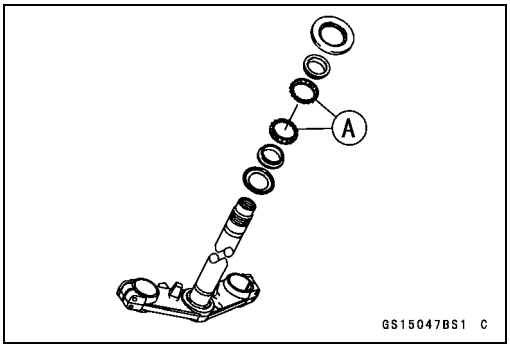

- Remove the steering stem (see Stem, Stem Bearing Removal in the Steering chapter).
- Using a high flash-point solvent, wash the upper and lower ball bearings [A] in the cages, and wipe the upper and lower outer races, which are press-fitted into the frame head pipe, clean off grease and dirt.
- Visually inspect the outer races and the ball bearings.
- ★Replace them if they show wear or damage.
- Pack the upper and lower ball bearings in the cages with grease, and apply a light coat of grease to the upper and lower outer races.
- Install the steering stem (see Stem, Stem Bearing Installation in the Steering chapter).
- Adjust the steering (see Steering Play Adjustment).

Periodic Maintenance Procedures

Electrical System

Lights and Switches Operation Inspection

First Step

- Set the gear position in the neutral position.
- Turn the ignition switch to ON.
- The following lights should go on according to the table below.

City Lights [A]	goes on
Taillight [B]	goes on
License Plate Light [C]	goes on
Meter Panel Illumination Light (LED) [D]	goes on
Meter Panel LCD [E]	goes on
Yellow Engine Warning Indicator Light (LED) [F]	goes on (about 2 seconds)
Red Low Battery Voltage Warning Indicator Light (LED) [G]	goes on (about 2 seconds)
Green Neutral Indicator Light (LED) [H]	goes on
Red Oil Pressure Warning Indicator Light (LED) [I]	goes on
Red Water Temperature Warning Indicator Light (LED) [J]	goes on (about 2 seconds)
Blue High Beam Indicator Light (LED) [K]	goes on (about 2 seconds)

★If the light does not go on, inspect or replace the following item.

Battery (see Charging Condition Inspection in the Electrical System chapter)
Main Fuse 30 A (see Fuse Inspection in the Electrical System chapter)
Applicable Bulb (see Wiring Diagram in the Electrical System chapter)
Meter Unit for Meter Panel LCD (see Meter Unit Inspection in the Electrical System chapter)
Meter Unit for Illumination Light (LED) (see Meter Unit Inspection in the Electrical System chapter)
Meter Unit for Yellow Engine Warning Indicator Light (LED) (see Meter Unit Inspection in the Electrical System chapter)
Meter Unit for Red Low Battery Voltage Warning Indicator Light (LED) (see Meter Unit Inspection in the Electrical System chapter)
Meter Unit for Green Neutral Indicator Light (LED) (see Meter Unit Inspection in the Electrical System chapter)
Meter Unit for Red Oil Pressure Warning Indicator Light (LED) (see Meter Unit Inspection in the Electrical System chapter)
Meter Unit for Red Water Temperature Warning Indicator Light (LED) (see Meter Unit Inspection in the Electrical System chapter)
Meter Unit for Blue High Beam Indicator Light (LED) (see Meter Unit Inspection in the Electrical System chapter)

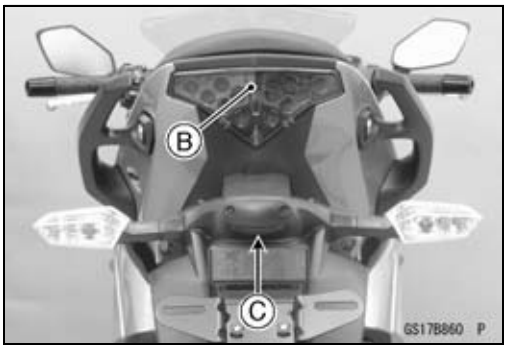

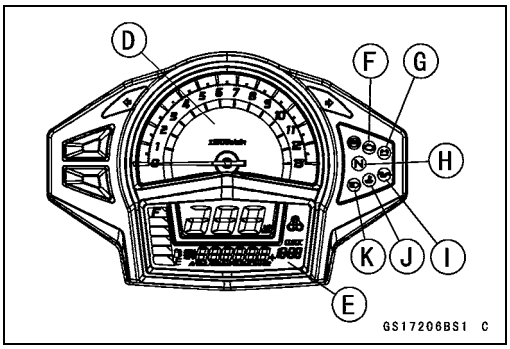

ECU (see ECU Power Supply Inspection in the Fuel System (DFI) chapter)
Ignition Switch (see Switch Inspection in the Electrical System chapter)
Neutral Switch (see Switch Inspection in the Electrical System chapter)
Harness (see Wiring Inspection in the Electrical System chapter)

- Turn the ignition switch to OFF.
- The all lights should go off.

★If any light does not go off, replace the ignition switch.

Second Step

- Turn the ignition switch to P (Park) position.
- The city light, taillight and license plate light should go on.

★If the light does not go on, inspect or replace the following item.
Ignition Switch (see Switch Inspection in the Electrical System chapter)

Third Step

- Turn the ignition switch to ON.
- Turn on the turn signal switch [A] (left or right position).
- The left or right turn signal lights [B] (front and rear) should blink according to the switch position.
- The green turn signal indicator light (LED) [C] in the meter unit should blink.

★If any light does not blink, inspect or replace the following item.
Turn Signal Light Bulb (see Turn Signal Light Bulb Replacement in the Electrical System chapter)
Meter Unit for Green Turn Signal Indicator Light (LED) (see Electronic Combination Meter Unit Inspection in the Electrical System chapter)
Turn Signal Relay Fuse 10 A (see Fuse Inspection in the Electrical System chapter)
Turn Signal Switch (see Switch Inspection in the Electrical System chapter)
Turn Signal Relay (see Turn Signal Relay Inspection in the Electrical System chapter)
Harness (see Wiring Inspection in the Electrical System chapter)

- Push the turn signal switch.
- The turn signal lights and indicator light (LED) should go off.

★If the light does not go off, inspect or replace the following item.
Turn Signal Switch (see Switch Inspection in the Electrical System chapter)
Turn Signal Relay (see Turn Signal Relay Inspection in the Electrical System chapter)

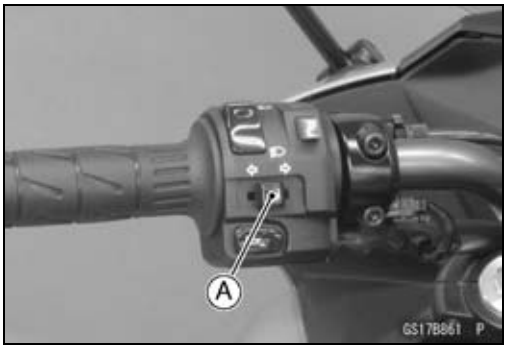

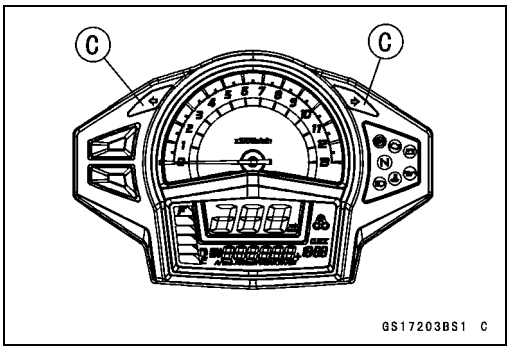

Periodic Maintenance Procedures

Fourth Step

- Set the dimmer switch [A] to low beam position.
- Start the engine.
- The low beam headlight should go on.

★If the low beam headlight does not go on, inspect or replace the following item.
Headlight Low Beam Bulb (see Headlight Bulb Replacement in the Electrical System chapter)
Headlight Fuse 15 A (see Fuse Inspection in the Electrical System chapter)
Dimmer Switch (see Switch Inspection in the Electrical System chapter)
Headlight Circuit Relay in Relay Box (see Relay Circuit Inspection in the Electrical System chapter)
Harness (see Wiring Inspection in the Electrical System chapter)

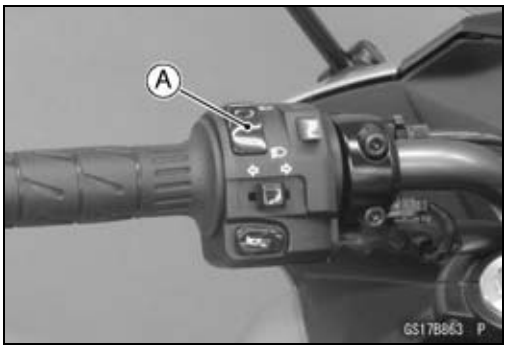

- Set the dimmer switch to high beam position.
- The low beam [A] and high beam [B] headlights should go on.
- The blue high beam indicator light (LED) [C] should go on.

★If the high beam headlight and/or indicator light (LED) does not go on, inspect or replace the following item.
Headlight High Beam Bulb (see Headlight Bulb Replacement in the Electrical System chapter)
Dimmer Switch (see Switch Inspection in the Electrical System chapter)

- Turn the engine stop switch to stop position.
- The low beam and high beam headlights should stay going on.

★If the headlights and/or the blue high beam indicator light (LED) goes off, inspect or replace the following item.
Headlight Circuit Relay in Relay Box (see Relay Circuit Inspection in the Electrical System chapter)

- Turn the ignition switch to OFF.
- The headlights and the indicator light (LED) should go off.

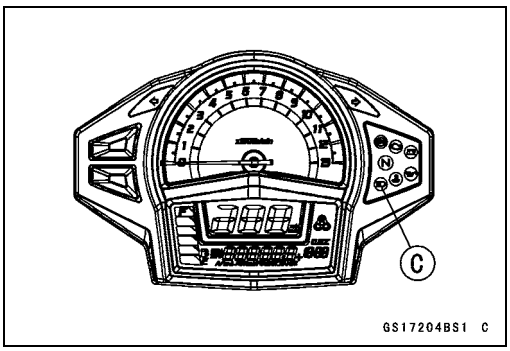

Headlight Aiming Inspection

- Inspect the headlight beam for aiming.

★If the headlight beam points to one side rather than straight ahead, adjust the horizontal beam.

Headlight Beam Horizontal Adjustment

- Turn the horizontal adjuster [A] on the headlight in or out until the beam points straight ahead.

★If the headlight beam points too low or high, adjust the vertical beam.

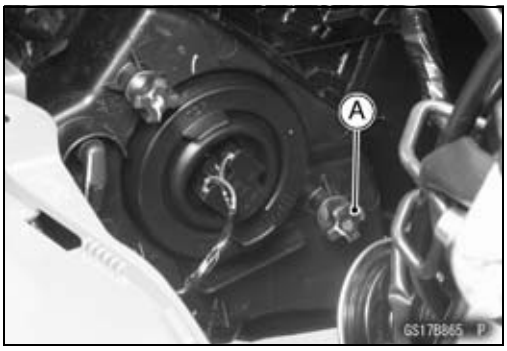

Headlight Beam Vertical Adjustment

- Turn the vertical adjuster [A] on the headlight in or out to adjust the headlight vertically.

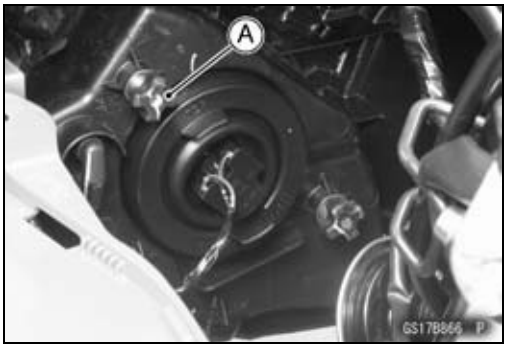

NOTE

○*On high beam, the brightest points should be slightly below horizontal with the motorcycle on its wheels and the rider seated. Adjust the headlight to the proper angle according to local regulations.*

NOTE

○*For US and CA model, the proper angle is 0.4 degrees below horizontal. This is 50 mm (2.0 in.) drop at 7.6 m (25 ft) measured from the center of the headlight with the motorcycle on its wheels and the rider seated.*

50 mm (2.0 in.) [A]
Center of Brightest Spot [B]
7.6 m (25 ft) [C]
Height of Headlight Center [D]

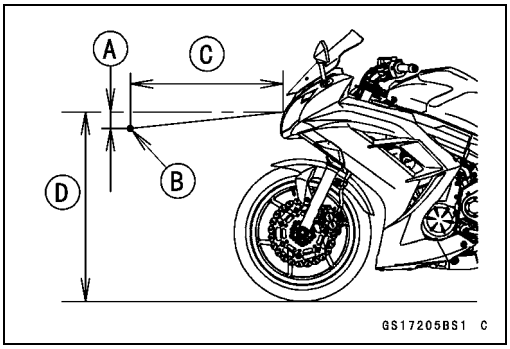

Sidestand Switch Operation Inspection

- Inspect the sidestand switch [A] operation according to the table below.

Sidestand Switch Operation

Sidestand	Gear Position	Clutch Lever	Engine Start	Engine Run
Up	Neutral	Released	Starts	Continue running
Up	Neutral	Pulled in	Starts	Continue running
Up	In Gear	Released	Does not start	Continue running
Up	In Gear	Pulled in	Starts	Continue running
Down	Neutral	Released	Starts	Continue running
Down	Neutral	Pulled in	Starts	Continue running
Down	In Gear	Released	Does not start	Stops
Down	In Gear	Pulled in	Does not start	Stops

Periodic Maintenance Procedures

★If the sidestand switch operation does not work, inspect or replace the following item.
Battery (see Charging Condition Inspection in the Electrical System chapter)
Main Fuse 30 A (see Fuse Inspection in the Electrical System chapter)
Ignition Fuse 10 A (see Fuse Inspection in the Electrical System chapter)
Ignition Switch (see Switch Inspection in the Electrical System chapter)
Sidestand Switch (see Switch Inspection in the Electrical System chapter)
Engine Stop Switch (see Switch Inspection in the Electrical System chapter)
Starter Button (see Switch Inspection in the Electrical System chapter)
Neutral Switch (see Switch Inspection in the Electrical System chapter)
Starter Relay (see Starter Relay Inspection in the Electrical System chapter)
Relay Box (see Relay Circuit Inspection in the Electrical System chapter)
Starter Circuit Relay (see Relay Circuit Inspection in the Electrical System chapter)
Harness (see Wiring Inspection in the Electrical System chapter)

★If the all parts are in good condition, replace the ECU (see ECU Removal/Installation in the Fuel System (DFI) chapter).

Engine Stop Switch Operation Inspection

First Step

- Turn the ignition switch to ON.
- Set the gear position in the neutral position.
- Turn the engine stop switch to stop position [A].
- Push the starter button [B].
- The engine should not start.

★If the engine starts, inspect or replace the following item.
Engine Stop Switch (see Switch Inspection in the Electrical System chapter)

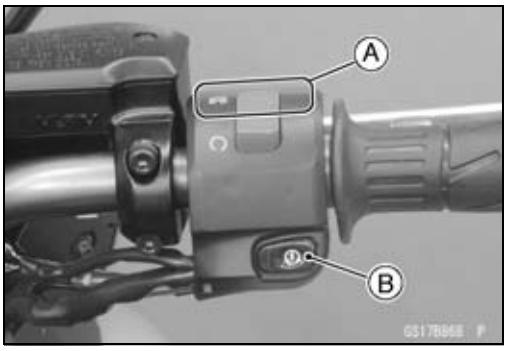

Second Step

- Turn the ignition switch to ON.
- Set the gear position in the neutral position.
- Turn the engine stop switch to run position [A].
- Push the starter button [B] and run the engine.
- Turn the engine stop switch to stop position.
- Immediately the engine should stop.

★If the engine does not stop, inspect or replace the following item.
Engine Stop Switch (see Switch Inspection in the Electrical System chapter)

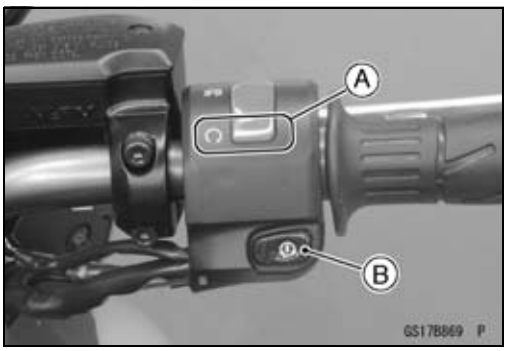

★If the engine stop switch is in good condition, replace the ECU (see ECU Removal/Installation in the Fuel System (DFI) chapter).

Others

Chassis Parts Lubrication

- Before lubricating each part, clean off any rusty spots with rust remover and wipe off any grease, oil, dirt, or grime.
- Lubricate the points listed below with indicated lubricant.

NOTE

○*Whenever the vehicle has been operated under wet or rainy conditions, or especially after using a high-pressure water spray, perform the general lubrication.*

Pivots: Lubricate with Grease.

Brake Lever
Brake Pedal
Clutch Lever
Rear Brake Joint Pin
Sidestand

Points: Lubricate with Grease.

Clutch Inner Cable Upper and Lower Ends [A]
Throttle Inner Cable Upper and Lower Ends

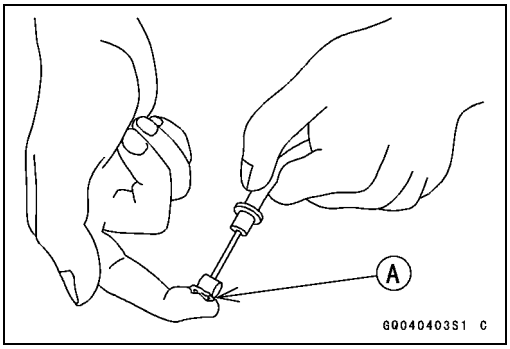

Cables: Lubricate with Rust Inhibitor.

Clutch Cable
Throttle Cables

- Lubricate the cables by seeping the oil between the cable and housing.

○The cable may be lubricated by using a commercially available pressure cable lubricator with an aerosol cable lubricant.

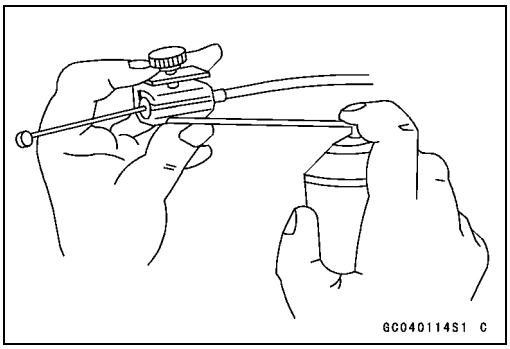

- With the cable disconnected at both ends, the inner cable should move freely [A] within the cable housing.

★If cable movement is not free after lubricating, if the cable is frayed [B], or if the cable housing is kinked [C], replace the cable.

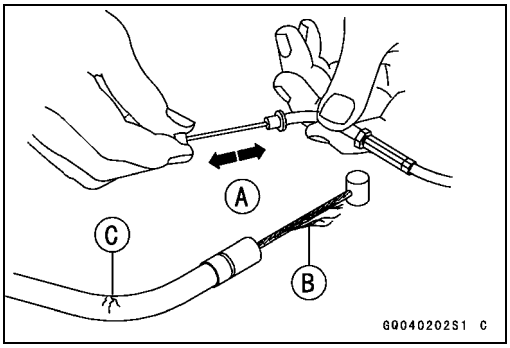

Periodic Maintenance Procedures

Bolts, Nuts and Fasteners Tightness Inspection

● Check the tightness of the bolts and nuts listed here. Also, check to see that each cotter pin is in place and in good condition.

NOTE

○*For the engine fasteners, check the tightness of them when the engine is cold (at room temperature).*

★If there are loose fasteners, retighten them to the specified torque following the specified tightening sequence. Refer to the appropriate chapter for torque specifications. If torque specifications are not in the appropriate chapter, see the Standard Torque Table. For each fastener, first loosen it by 1/2 turn, then tighten it.

★If cotter pins are damaged, replace them with new ones.

Bolt, Nut and Fastener to be checked

Engine:
- Clutch Lever Pivot Bolt Locknut
- Engine Bracket Bolts
- Engine Mounting Bolts and Nuts
- Exhaust Pipe Manifold Holder Nuts
- Muffler Body Mounting Bolts

Wheels:
- Front Axle
- Front Axle Clamp Bolt
- Rear Axle Nut
- Rear Axle Nut Cotter Pin

Brakes:
- Brake Lever Pivot Nut
- Brake Pedal Bolt
- Caliper Mounting Bolts
- Front Master Cylinder Clamp Bolts
- Rear Master Cylinder Mounting Bolts
- Rear Master Cylinder Push Rod Joint Cotter Pin

Suspension:
- Front Fork Clamp Bolts
- Rear Shock Absorber Bolt and Nut
- Swingarm Pivot Shaft Nut
- Swingarm Bracket Bolts

Steering:
- Steering Stem Head Bolt
- Handlebar Holder Bolts

Others:
- Footpeg Stay Bolts
- Sidestand Bolt

Replacement Parts

Air Cleaner Element Replacement

NOTE

○*In dusty areas, the element should be replaced more frequently than the recommended interval.*

⚠ WARNING

If dirt or dust is allowed to pass through into the throttle body assy, the throttle may become stuck, possibly causing accident. Replace the air cleaner element according to the maintenance chart.

NOTICE

If dirt gets through into the engine, excessive engine wear and possibly engine damage will occur.

● Remove:
Fuel Tank (see Fuel Tank Removal in the Fuel System (DFI) chapter)
ECU [A]
Screw [B]
Clamp [C]
Intake Air Pressure Sensor Connector [D] (Disconnect)

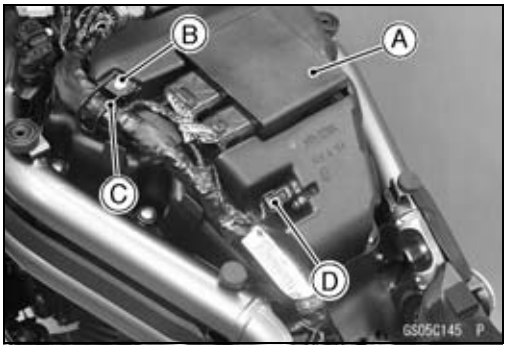

● Remove:
Bolts [A]
Fuel Tank Bracket [B]
Rubber Cover [C]

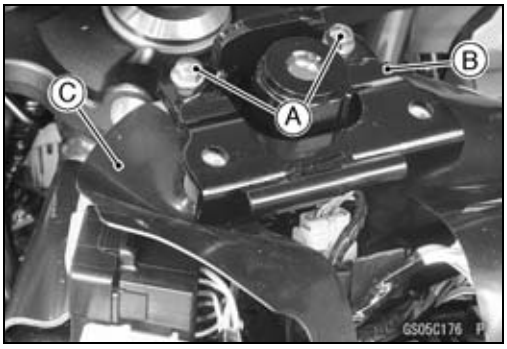

● Remove the bolts [A] and move the bracket [B] aside.

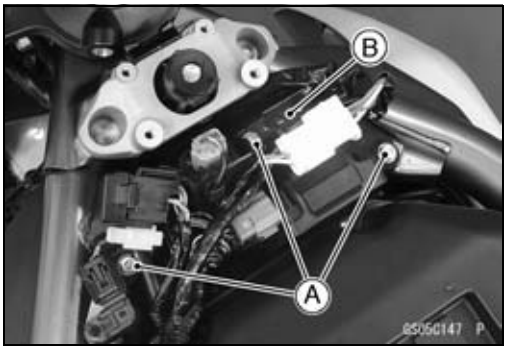

Periodic Maintenance Procedures

- Remove:
  Screws [A]
  Air Cleaner Housing Cover [B]

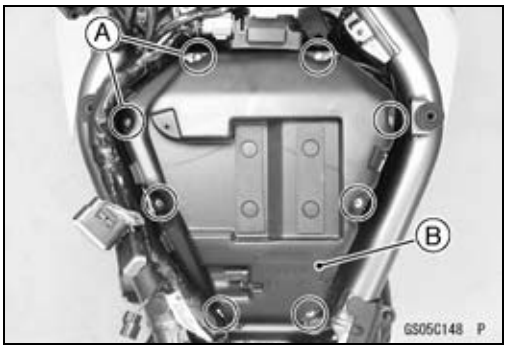

- Loosen the screw [A] to remove the air cleaner element [B].
- Remove the screw from the element.
- Install a new element so that the screen side faces upward.

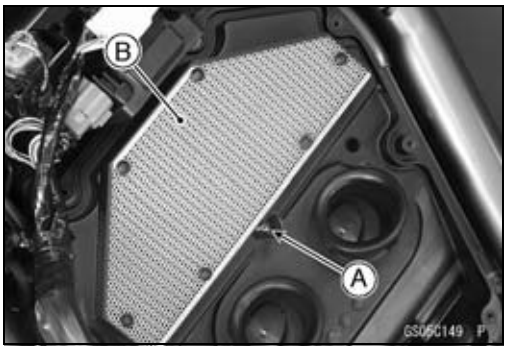

NOTICE

Use only the recommended air cleaner element (Kawasaki part number 11013-0713). Using another air cleaner element will wear the engine prematurely or lower the engine performance.

- Tighten:

  Torque - Air Cleaner Element Screw: 1.2 N·m (0.12 kgf·m, 11 in·lb)

- Install the air cleaner housing cover and tighten the screws.

  Torque - Air Cleaner Housing Cover Screws: 1.2 N·m (0.12 kgf·m, 11 in·lb)

- Install the other removed parts (see appropriate chapter).

○Run the harness and leads correctly (see Cable, Wire, and Hose Routing section in the Appendix chapter).

○Install the bracket and tighten the bolts following the specified tightening sequence shown in the figure.

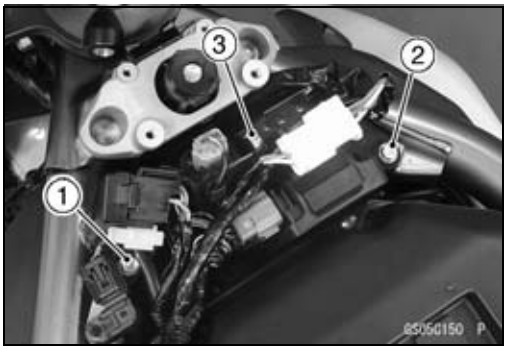

Fuel Hose Replacement

- Remove:
  Fuel Tank (see Fuel Tank Removal in the Fuel System (DFI) chapter)
  Left Middle Fairing (see Middle Fairing Removal in the Frame chapter)
- Be sure to place a piece of cloth [A] around the fuel hose joint.
- Insert a standard tip screwdriver [B] into the slit on the joint lock [C].

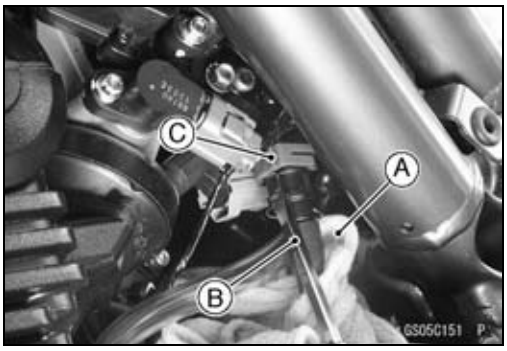

- Turn [A] the driver to unlock the joint lock [B].
- Pull the fuel hose joint [C] out of the delivery pipe.

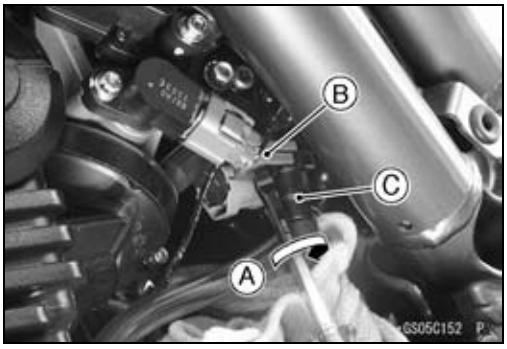

⚠ WARNING

Fuel is flammable and explosive under certain conditions and can cause severe burns. Be prepared for fuel spillage; any spilled fuel must be completely wiped up immediately. When the fuel hose is disconnected, fuel spills out from the hose and the pipe. Cover the hose connection with a clean shop towel to prevent fuel spillage.

- Replace the fuel hose with a new one.
- Insert the fuel hose joint [A] straight onto the delivery pipe until the hose joint clicks.
- Push [B] the joint lock [C].

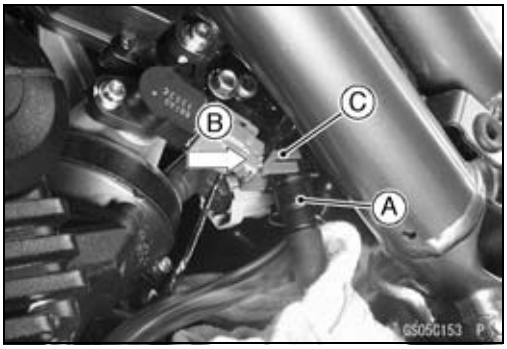

- Push and pull [A] the fuel hose joint [B] back and forth more than two times and make sure it is locked and does not come off.

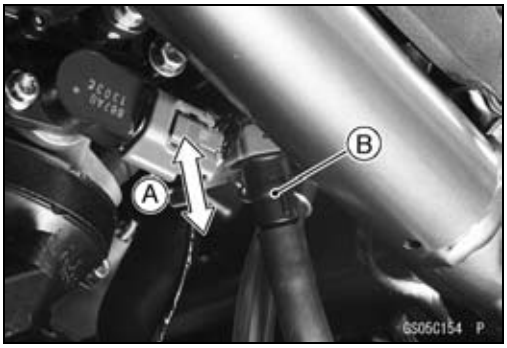

⚠ WARNING

Leaking fuel can cause a fire or explosion resulting in severe burns. Make sure the fuel hose joint is installed correctly on the delivery pipe and that it doesn't leak.

★If it comes off, reinstall the hose joint.
- Run the fuel hose correctly (see Cable, Wire, and Hose Routing section in the Appendix chapter).
- Install the fuel tank (see Fuel Tank Removal in the Fuel System (DFI) chapter).
- Start the engine and check the fuel hose for leaks.

Coolant Change

⚠ WARNING

Coolant can be extremely hot and cause severe burns, is toxic and very slippery. Do not remove the radiator cap or attempt to change the coolant when the engine is hot; allow it cool completely. Immediately wipe any spilled coolant from tires, frame, engine or other painted parts. Do not ingest coolant.

- Remove the right middle fairing (see Middle Fairing Removal in the Frame chapter)

Periodic Maintenance Procedures

- Place a container under the water pump drain bolt [A], then remove the drain bolt.

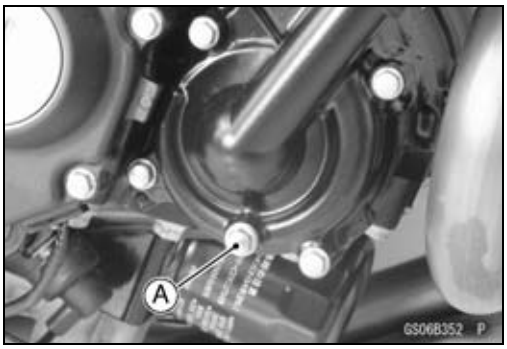

- Remove the radiator cap [A] in two steps. First turn the cap counterclockwise to the first stop. Then push and turn it further in the same direction and remove the cap.
  - ○The coolant will drain from the radiator and engine.
- Remove the reserve tank hose [B].

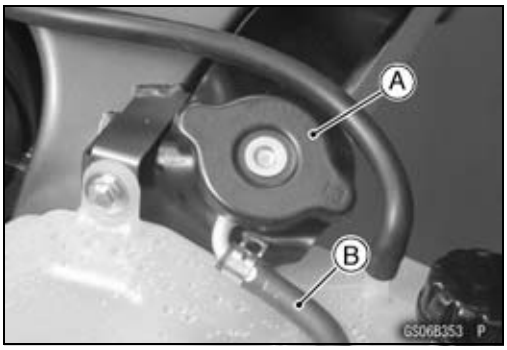

- Remove the reserve tank cap, and pour the coolant into a suitable container.
- Tighten the drain bolt with a new gasket.

Torque - Water Pump Drain Bolt: 9.8 N·m (1.0 kgf·m, 87 in·lb)

- When filling the coolant, choose a suitable mixture ratio by referring to the coolant manufacturer's directions.

NOTICE

Soft or distilled water must be used with the antifreeze in the cooling system.
If hard water is used in the system, it causes scales accumulation in the water passages, and considerably reduces the efficiency of the cooling system.

Water and Coolant Mixture Ratio (Recommended)

Soft Water:	**50%**
Coolant:	**50%**
Freezing Point:	**–35°C (–31°F)**
Total Amount:	**1.2 L (1.3 US qt)**

- Fill the radiator up to the filler neck [A] with coolant.

NOTE

○*Pour in the coolant slowly as it can expel the air from the engine and radiator.*

- Check the cooling system for leaks.
- Tap the radiator hoses to force any air bubbles caught inside.
- Fill the radiator up to the filler neck with coolant, and install the radiator cap.

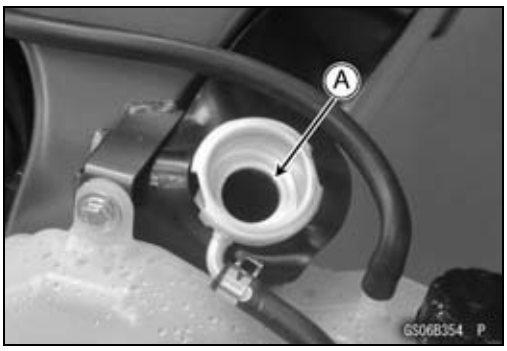

- Fill the reserve tank up to the “F” (full) level line [A] with coolant and install the cap [B].
- Start the engine, warm it up thoroughly until the radiator fan turns on, and then stop the engine.
- Check the coolant level in the reserve tank after the engine cools down.

★If the coolant level is lower than the “L” (low) level line [C], add coolant to the “F” level line.

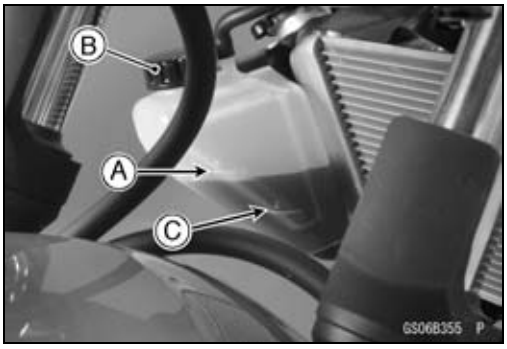

NOTICE
Do not add more coolant above the “F” level line.

- Install the right middle fairing (see Middle Fairing Installation in the Frame chapter).

Radiator Hose and O-ring Replacement

- Drain the coolant (see Coolant Change).
- Remove:
  Thermostat Housing [A] (see Thermostat Removal in the Cooling System chapter)
  Water Pump Cover [B] (see Water Pump Removal in the Cooling System chapter)
  Hoses [C]
  O-rings [D]
- Apply grease to the new O-rings and install them.
- Install the new hoses and tighten the clamps securely.
- Tighten:

  Torque - Water Hose Clamp Screws: 3.0 N·m (0.31 kgf·m, 27 in·lb)

- Fill the coolant (see Coolant Change).
- Check the cooling system for leaks.

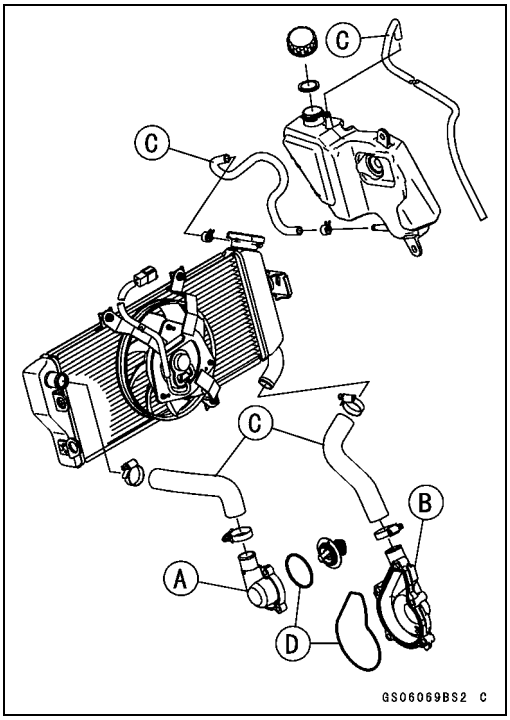

Engine Oil Change

- Remove the left middle fairing (see Middle Fairing Removal in the Frame chapter).
- Situate the motorcycle so that it is vertical after warming up the engine.
- Unscrew the oil filler plug [A].

Periodic Maintenance Procedures

- Place the oil pan beneath the engine.
- Remove the engine oil drain plug [A] to drain the oil.

○The oil in the oil filter can be drained by removing the filter (see Oil Filter Replacement).

- Replace the drain plug gasket with a new one.
- Tighten:

Torque - Engine Oil Drain Plug: 30 N·m (3.1 kgf·m, 22 ft·lb)

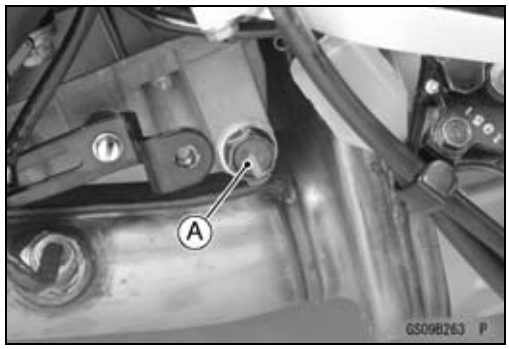

- Pour in the specified type and amount of oil.

Recommended Engine Oil

Type:	**API SG, SH, SJ, SL or SM with JASO MA, MA1 or MA2**
Viscosity:	**SAE 10W-40**
Capacity:	**1.6 L (1.7 US qt) (when filter is not removed)**
	1.8 L (1.9 US qt) (when filter is removed)
	2.3 L (2.4 US qt) (when engine is completely dry)

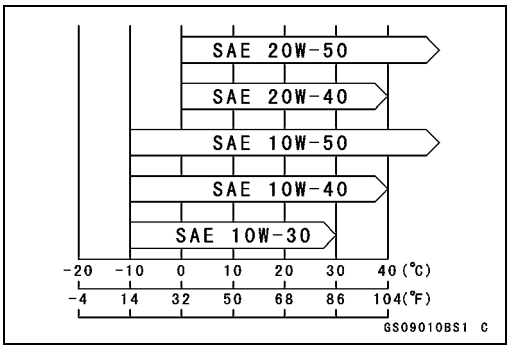

NOTE

○*Do not add any chemical additive to the oil. Oils fulfilling the above requirements are fully formulated and provide adequate lubrication for both the engine and the clutch.*

○*Although 10W-40 engine oil is the recommended oil for most conditions, the oil viscosity may need to be changed to accommodate atmospheric conditions in your riding area.*

- Check the oil level (see Oil Level Inspection in the Engine Lubrication System chapter).
- Install the left middle fairing (see Middle Fairing Installation in the Frame chapter).

Oil Filter Replacement

- Drain the engine oil (see Engine Oil Change).
- Remove the right middle fairing (see Middle Fairing Removal in the Frame chapter).
- Remove the oil filter [A] with the oil filter wrench [B].

Special Tool - Oil Filter Wrench: 57001-1249

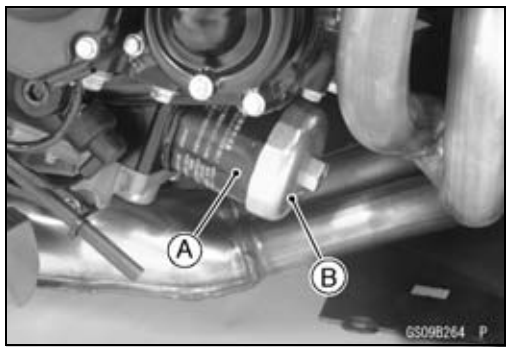

- Replace the filter with a new one.
- Apply grease to the O-ring [A] before installation.
- Tighten the filter with the oil filter wrench.

Torque - Oil Filter: 17.5 N·m (1.8 kgf·m, 13 ft·lb)

NOTE

○*Hand tightening of the oil filter can not be allowed since it does not reach to this tightening torque.*

- Pour in the specified type and amount of oil (see Engine Oil Change).
- Install the removed parts (see appropriate chapters).

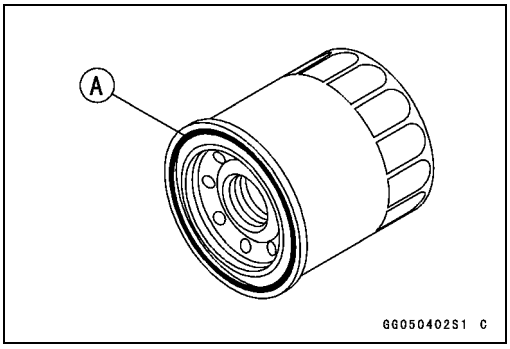

Brake Hose and Pipe Replacement

NOTICE

Brake fluid quickly ruins painted plastic surfaces; any spilled fluid should be completely washed away immediately.

- Remove the brake hose banjo bolts [A].
- Remove the brake hoses [B], noting the following.

○Take care not to spill the brake fluid on the painted or plastic parts.

○Temporarily secure the end of the brake hose to some high place to keep fluid loss to a minimum.

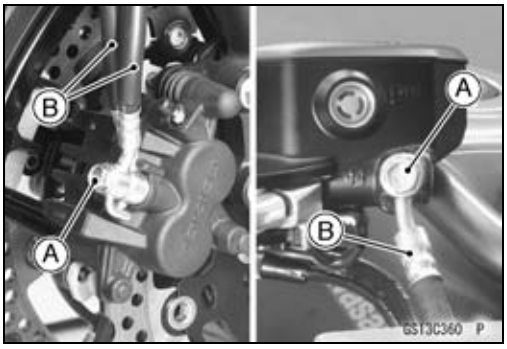

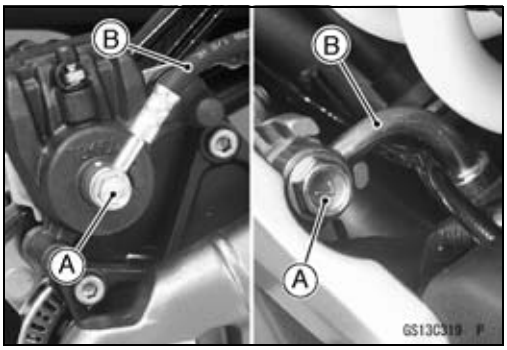

Periodic Maintenance Procedures

● For models equipped with an ABS, note the following.

NOTE

○*When removing the brake pipes and hoses on the hydraulic unit, remove them according to each assembly of the exploded view in the Brakes chapter.*

● Remove:
Right Middle Fairing (see Middle Side Fairing Removal in the Frame chapter)
Bracket Bolts [A]
Brackets [B]
Brake Pipe Joint Nuts [C]

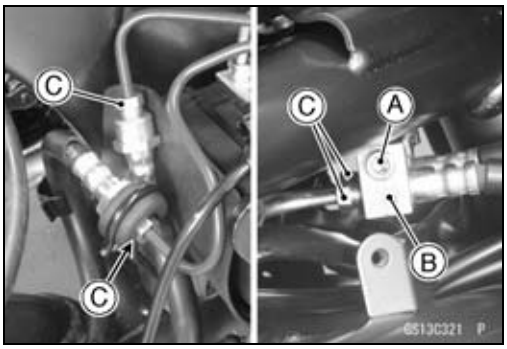

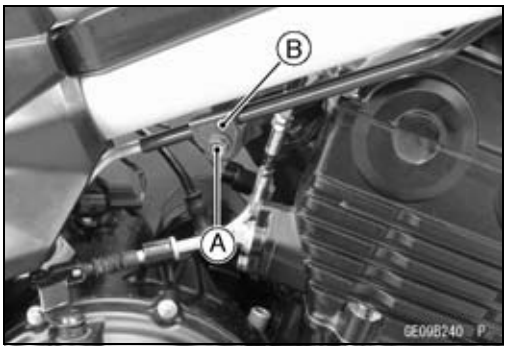

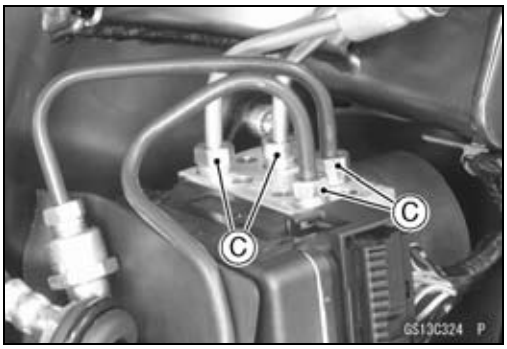

● Install the brake hose, noting the following.
○Replace the washers [A] on each side of hose fitting [B] with new ones.
○Avoid sharp bending, kinking, flattening or twisting, and route the hoses according to Cable, Wire, and Hose Routing section in the Appendix chapter.
● Before installing the brake pipe, check to see that there is no damage on the threads of the brake pipe joint nut.
★If there is any damage, replace the damaged parts with new ones.

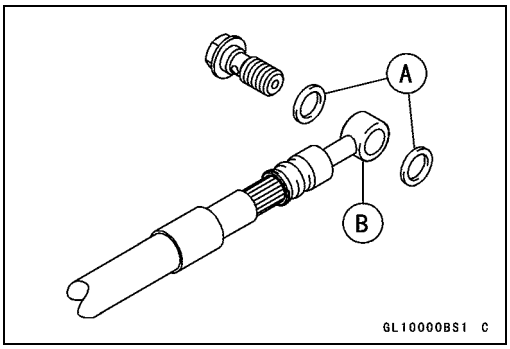

NOTE

○*Tighten the brake pipe joint nuts at both ends of the brake pipe temporarily and then tighten them to the specified torque.*

● Install the brake pipes at the specified angle (see Cable, Wire, and Hose Routing section in the Appendix chapter).
● Tighten the brake pipe joint nuts with the flare nut wrench.
● Tighten:

Torque - Brake Hose Banjo Bolts: 25 N·m (2.5 kgf·m, 18 ft·lb)
Brake Pipe Joint Nuts (EX650F Model): 18 N·m (1.8 kgf·m, 13 ft·lb)

● Fill the brake line (see Brake Fluid Change).

Periodic Maintenance Procedures

Brake Fluid Change

NOTE

○*The procedure to change the front brake fluid is as follows. Changing the rear brake fluid is the same as for the front brake.*

- Level the brake fluid reservoir.
- Remove the reservoir cap and diaphragm.
- Remove the rubber cap [A] from the bleed valve on the caliper.
- Attach a clear plastic hose [B] to the bleed valve [C], and run the other end of the hose into a container.
- Fill the reservoir with fresh specified brake fluid.

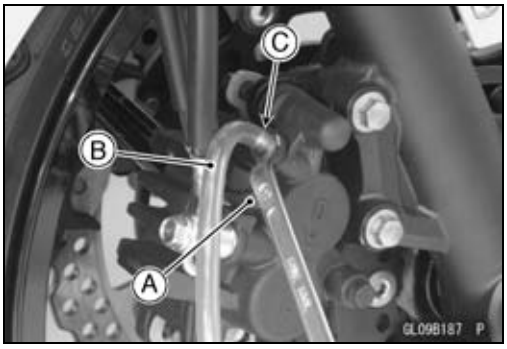

- Change the brake fluid.

○Repeat this operation until fresh brake fluid comes out from the plastic hose or the color of the fluid changes.

1. Open the bleed valve [A].
2. Apply the brake and hold it [B].
3. Close the bleed valve [C].
4. Release the brake [D].

NOTE

○*The fluid level must be checked often during the changing operation and replenished with fresh brake fluid. If the fluid in the reservoir runs out any time during the changing operation, the brakes will need to be bled since air will have entered the brake line.*

○*Front Brake: Repeat the above steps for the other caliper.*

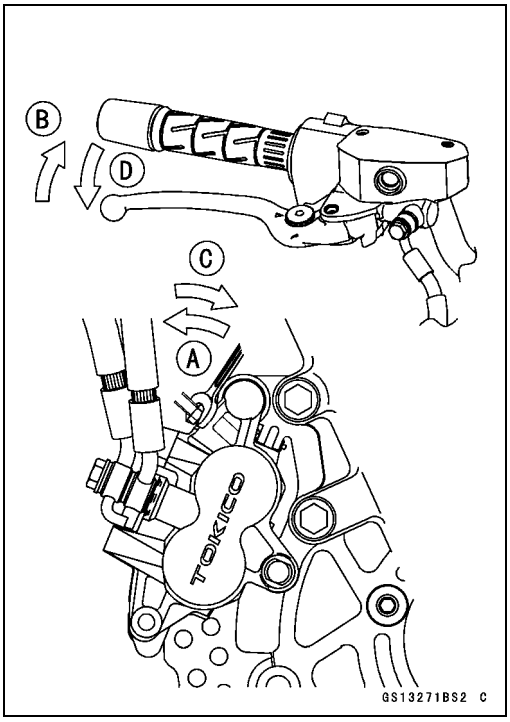

- Remove the clear plastic hose.
- Install the diaphragm and reservoir cap.
- Tighten:

Torque - Front Brake Reservoir Cap Screws: 1.5 N·m (0.15 kgf·m, 13 in·lb)

- Follow the procedure below to install the rear brake fluid reservoir cap correctly.

○First, tighten the rear brake fluid reservoir cap [B] clockwise [C] by hand until slight resistance is felt indicating that the cap is seated on the reservoir body, then tighten the cap an additional 1/6 turn [D] while holding the brake fluid reservoir body [A].

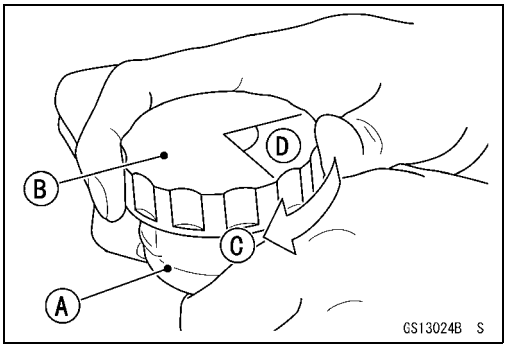

- Tighten the bleed valve, and install the rubber cap.

Torque - Caliper Bleed Valve: 7.8 N·m (0.80 kgf·m, 69 in·lb)

- After changing the fluid, check the brake for good braking power, no brake drag, and no fluid leakage.

★If necessary, bleed the air from the lines.

Periodic Maintenance Procedures

Master Cylinder Rubber Parts Replacement

Front Master Cylinder Disassembly

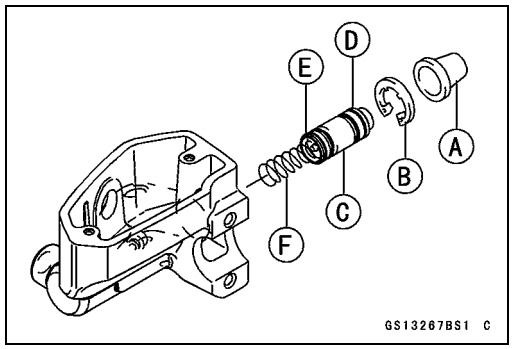

- Remove the front master cylinder (see Front Master Cylinder Removal in the Brakes chapter).
- Remove the reservoir cap and diaphragm, and pour the brake fluid into a container.
- Unscrew the locknut and pivot bolt, and remove the brake lever.
- Pull the dust cover [A] out of place, and remove the circlip [B].

  Special Tool - Inside Circlip Pliers: 57001-143

- Pull out the piston [C], secondary cup [D], primary cup [E], and return spring [F].

NOTICE

Do not remove the secondary cup from the piston since removal will damage it.

Rear Master Cylinder Disassembly

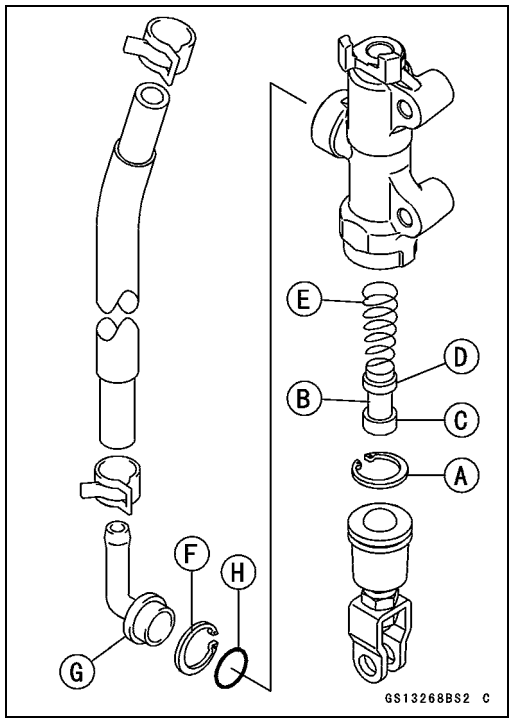

NOTE

○*Do not remove the push rod clevis for master cylinder disassembly since removal requires brake position adjustment.*

- Remove the rear master cylinder (see Rear Master Cylinder Removal in the Brakes chapter).
- Remove the circlip [A].

  Special Tool - Inside Circlip Pliers: 57001-143

- Pull out the push rod with the piston stop.
- Take off the piston [B], secondary cup [C], primary cup [D] and return spring [E].
- Remove the circlip [F] and pull out the brake hose connector [G] and O-ring [H].

  Special Tool - Inside Circlip Pliers: 57001-143

NOTICE

Do not remove the secondary cup from the piston since removal will damage it.

Master Cylinder Assembly

- Before assembly, clean all parts including the master cylinder with brake fluid or alcohol.

NOTICE

Except for the disc pads and disc, use only disc brake fluid, isopropyl alcohol, or ethyl alcohol for cleaning brake parts. Do not use any other fluid for cleaning these parts. Gasoline, engine oil, or any other petroleum distillate will cause deterioration of the rubber parts. Oil spilled on any part will be difficult to wash off completely, and will eventually deteriorate the rubber used in the disc brake.

- Apply brake fluid to the new parts and to the inner wall of the cylinder.
- Take care not to scratch the piston or the inner wall of the cylinder.
- Apply silicone grease to the brake lever pivot bolt and the push rod.
- Replace the brake lever pivot bolt locknut with a new one.
- Tighten:

Torque - Brake Lever Pivot Bolt: 1.0 N·m (0.10 kgf·m, 9 in·lb)
Brake Lever Pivot Bolt Locknut: 5.9 N·m (0.60 kgf·m, 52 in·lb)

Caliper Rubber Parts Replacement

Front Caliper Disassembly

- Remove:
  Front Caliper (see Front Caliper Removal in the Brakes chapter)
  Brake Pads (see Front Brake Pad Removal in the Brakes chapter)
  Pad Spring

- Using compressed air, remove the pistons.
○Cover the piston area with a clean, thick cloth [A].
○Blow compressed air [B] into the hole for the banjo bolt to remove the piston.

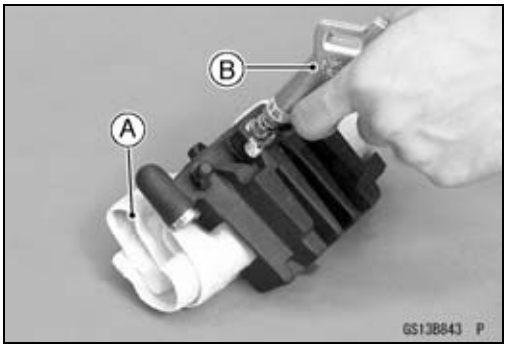

⚠ WARNING

The piston in the brake caliper can crush hands and fingers. Never place your hand or fingers in front of the piston.

- Pull out the pistons by hand.
- Remove:
  Caliper Holder
  Dust Seals
  Fluid Seals
  Bleed Valve
  Rubber Cap

NOTE

○*If compressed air is not available, do as follows with the brake hose connected to the caliper.*
○*Prepare a container for brake fluid, and perform the work above it.*
○*Remove the brake pads (see Front Brake Pad Removal in the Brakes chapter).*
○*Pump the brake lever until the pistons come out of the cylinders, and then disassemble the caliper.*

Periodic Maintenance Procedures

Front Caliper Assembly

- Clean the caliper parts except for the pads.

NOTICE

For cleaning the parts, use only disc brake fluid, isopropyl alcohol, or ethyl alcohol.

- Install the bleed valve and rubber cap.

Torque - Caliper Bleed Valve: 7.8 N·m (0.80 kgf·m, 69 in·lb)

- Replace the fluid seals [A] with new ones.
  - ○Apply brake fluid to the fluid seals, and install them into the cylinders by hand.
- Replace the dust seals [B] with new ones if they are damaged.
  - ○Apply brake fluid to the dust seals, and install them into the cylinders by hand.

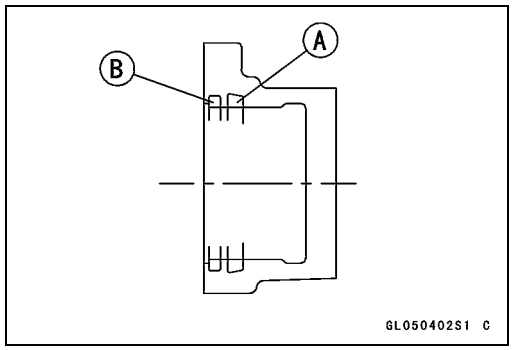

- Apply brake fluid to the outside of the pistons, and push them into each cylinder by hand.
- Check the friction boot [A] and the dust cover [B] replace them with new ones if they are damaged.
- Apply a thin coat of PBC (Poly Butyl Cuprysil) grease to the caliper holder shafts [C] (PBC is a special high -temperature, water-resistance grease).

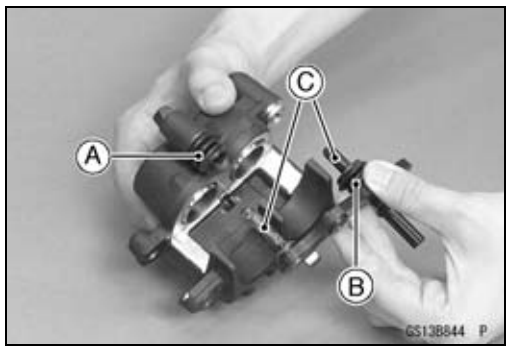

- Install the pad spring [A].
- Install the pads (see Front Brake Pad Installation in the Brakes chapter).
- Wipe up any spilled brake fluid on the caliper with wet cloth.

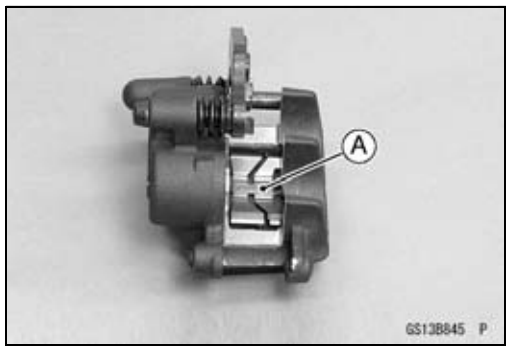

Rear Caliper Disassembly

- Remove:
  Rear Caliper (see Rear Caliper Removal in the Brakes chapter)
  Brake Pads (see Rear Brake Pad Removal in the Brakes chapter)
  Pad Spring

● Using compressed air, remove the piston.
○Cover the piston area with a clean, thick cloth [A].
○Blow compressed air [B] into the hole for the banjo bolt to remove the piston.

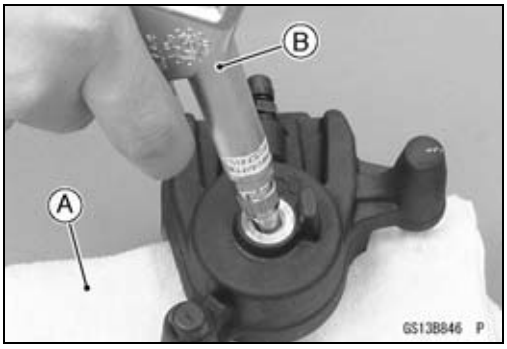

⚠ WARNING

The piston in the brake caliper can crush hands and fingers. Never place your hand or fingers in front of the piston.

● Pull out the pistons by hand.
● Remove:
Caliper Holder
Dust Seal
Fluid Seal
Bleed Valve
Rubber Cap

NOTE

○*If compressed air is not available, do as follows with the brake hose connected to the caliper.*
○*Prepare a container for brake fluid, and perform the work above it.*
○*Remove the brake pads (see Rear Brake Pad Removal in the Brakes chapter).*
○*Pump the brake pedal until the piston come out of the cylinder, and then disassemble the caliper.*

Rear Caliper Assembly

● Clean the caliper parts except for the pads.

NOTICE

For cleaning of the parts, use only disc brake fluid, isopropyl alcohol, or ethyl alcohol.

● Install the bleed valve and rubber cap.

Torque - Caliper Bleed Valve: 7.8 N·m (0.80 kgf·m, 69 in·lb)

● Replace the fluid seal [A] with a new one.
○Apply brake fluid to the fluid seal, and install it into the cylinder by hand.
● Replace the dust seal [B] with a new one if it is damaged.
○Apply brake fluid to the dust seal, and install it into the cylinder by hand.

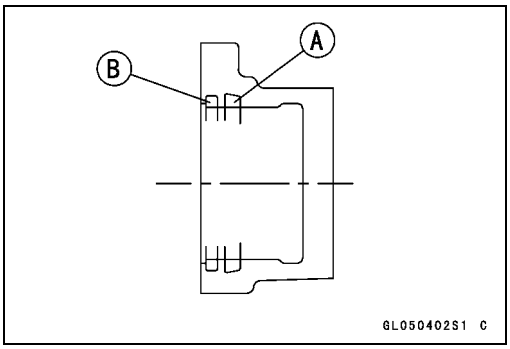

Periodic Maintenance Procedures

- Apply brake fluid to the outside of the piston, and push it into the cylinder by hand.
- Replace the friction boot [A] and dust cover [B] with new ones if they are damaged.
- Apply a thin coat of PBC (Poly Butyl Cuprysil) grease to the caliper holder shafts [C] (PBC is a special high -temperature, water-resistance grease).

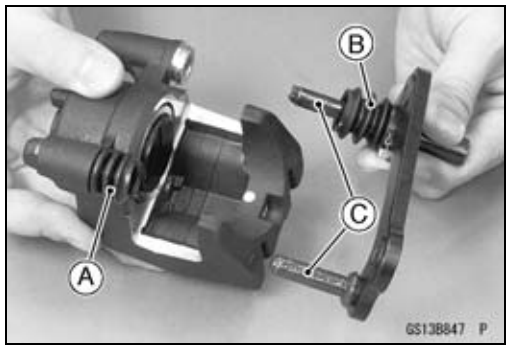

- Install the pad spring [A] in the caliper as shown.
- Install the pads (see Rear Brake Pad Installation in the Brakes chapter).
- Wipe up any spilled brake fluid on the caliper with wet cloth.

Spark Plug Replacement

- Remove:
  Air Cleaner Housing (see Air Cleaner Housing Removal in the Fuel System (DFI) chapter)
  Stick Coils (see Stick Coil Removal in the Electrical System chapter)
- Remove the spark plugs using the 16 mm (0.63 in.) plug wrench [A] vertically.

- Replace the spark plugs with new ones.

Standard Spark Plug
Type: CR9EIA-9

- Insert the spark plug [A] into the plug wrench [B].
- Install the spark plug into the plug hole, and hand-tighten it first.

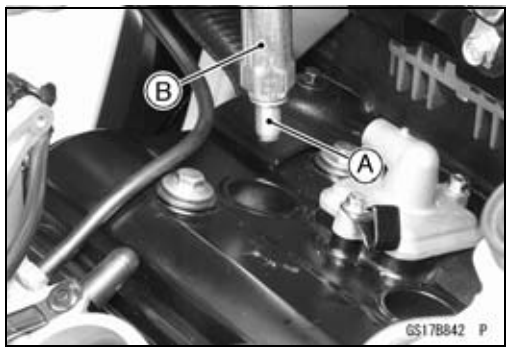

NOTICE
The insulator of the spark plug may break if when the wrench is inclined during tightening.

- Tighten:

Torque - Spark Plugs: 15 N·m (1.5 kgf·m, 11 ft·lb)

- Install the stick coils securely.
  ○Pull the stick coils lightly to check the installation condition.
- Run the leads correctly (see Cable, Wire, and Hose Routing section in the Appendix chapter).
- Install the other removed parts (see appropriate chapters).

Fuel System (DFI)

Table of Contents

Exploded View 3-4
DFI System 3-10
DFI Parts Location 3-15
Specifications 3-17
Special Tools and Sealant 3-19
DFI Servicing Precautions 3-21
  DFI Servicing Precautions 3-21
Troubleshooting the DFI System 3-23
  Outline 3-23
  Inquiries to Rider 3-27
DFI System Troubleshooting Guide 3-29
Self-Diagnosis 3-34
  Self-diagnosis Outline 3-34
  Self-diagnosis Procedures 3-34
    Service Code Reading 3-37
    Service Code Erasing 3-37
    Service Code Table 3-38
    Backups 3-39
Main Throttle Sensor (Service Code 11) 3-41
  Main Throttle Sensor Removal/Adjustment 3-41
  Main Throttle Sensor Input Voltage Inspection 3-41
  Main Throttle Sensor Output Voltage Inspection 3-42
  Main Throttle Sensor Resistance Inspection 3-43
Intake Air Pressure Sensor (Service Code 12) 3-44
  Intake Air Pressure Sensor Removal 3-44
  Intake Air Pressure Sensor Installation 3-44
  Intake Air Pressure Sensor Input Voltage Inspection 3-44
  Intake Air Pressure Sensor Output Voltage Inspection 3-45
Intake Air Temperature Sensor (Service Code 13) 3-50
  Intake Air Temperature Sensor Removal/Installation 3-50
  Intake Air Temperature Sensor Output Voltage Inspection 3-50
  Intake Air Temperature Sensor Resistance Inspection 3-51
Water Temperature Sensor (Service Code 14) 3-53
  Water Temperature Sensor Removal/Installation 3-53
  Water Temperature Sensor Output Voltage Inspection 3-54
  Water Temperature Sensor Resistance Inspection 3-55
Crankshaft Sensor (Service Code 21) 3-56
  Crankshaft Sensor Removal/Installation 3-56
  Crankshaft Sensor Resistance Inspection 3-56
  Crankshaft Sensor Peak Voltage Inspection 3-56
Speed Sensor (Service Code 24) 3-57
  Speed Sensor Removal/Installation 3-57
  Speed Sensor Inspection 3-57
  Speed Sensor Input Voltage Inspection 3-57
  Speed Sensor Output Voltage Inspection 3-58
Vehicle-down Sensor (Service Code 31) 3-60
  Vehicle-down Sensor Removal/Installation 3-60
  Vehicle-down Sensor Inspection 3-60
Subthrottle Sensor (Service Code 32) 3-63
  Subthrottle Sensor Removal/Adjustment 3-63

Subthrottle Sensor Input Voltage Inspection 3-63
Subthrottle Sensor Output Voltage Inspection 3-64
Subthrottle Sensor Resistance Inspection 3-66
Oxygen Sensor-not activated (Service Code 33) (Equipped Models) 3-67
Oxygen Sensor Removal/Installation 3-67
Oxygen Sensor Inspection 3-67
Stick Coils #1, #2: (Service Code 51, 52) 3-70
Stick Coil Removal/Installation 3-70
Stick Coil Primary Winding Resistance Inspection 3-70
Stick Coil Input Voltage Inspection 3-70
Radiator Fan Relay (Service Code 56) 3-72
Radiator Fan Relay Removal/Installation 3-72
Radiator Fan Relay Inspection 3-72
Subthrottle Valve Actuator (Service Code 62) 3-73
Subthrottle Valve Actuator Removal 3-73
Subthrottle Valve Actuator Inspection 3-73
Subthrottle Valve Actuator Resistance Inspection 3-73
Subthrottle Valve Actuator Input Voltage Inspection 3-74
Air Switching Valve (Service Code 64) 3-76
Air Switching Valve Removal/Installation 3-76
Air Switching Valve Inspection 3-76
Oxygen Sensor Heater (Service Code 67) (Equipped Models) 3-77
Oxygen Sensor Heater Removal/Installation 3-77
Oxygen Sensor Heater Inspection 3-77
Oxygen Sensor Heater Power Source Voltage Inspection 3-78
Oxygen Sensor-Incorrect Output Voltage (Service Code 94) (Equipped Models) 3-80
Oxygen Sensor Removal/Installation 3-80
Oxygen Sensor Inspection 3-80
Purge Valve (Service Code 3A) (CAL, SEA-B1 and TH Models) 3-83
Purge Valve Removal/Installation 3-83
Purge Valve Inspection 3-83
Yellow Engine Warning Indicator Light (LED) 3-85
Yellow Engine Warning Indicator Light (LED) Inspection 3-85
ECU 3-86
ECU Identification 3-86
ECU Removal 3-86
ECU Installation 3-86
ECU Power Supply Inspection 3-86
DFI Power Source 3-89
ECU Fuse Removal 3-89
ECU Fuse Installation 3-89
ECU Fuse Inspection 3-89
ECU Main Relay Removal/Installation 3-89
ECU Main Relay Inspection 3-89
Fuel Line 3-90
Fuel Pressure Inspection 3-90
Fuel Flow Rate Inspection 3-91
Fuel Pump 3-93
Fuel Pump Removal 3-93
Fuel Pump Installation 3-93
Fuel Pump Operation Inspection 3-94
Fuel Pump Operating Voltage Inspection 3-95
Pressure Regulator Removal 3-96
Fuel Filter Cleaning 3-96
Fuel Injectors 3-97
Fuel Injector Removal/Installation 3-97
Fuel Injector Audible Inspection 3-97

Fuel Injector Resistance Inspection 3-97
Fuel Injector Power Source Voltage Inspection 3-98
Fuel Injector Output Voltage Inspection 3-99
Fuel Injector Fuel Line Inspection 3-100
Throttle Grip and Cables 3-102
Throttle Grip Free Play Inspection 3-102
Throttle Grip Free Play Adjustment 3-102
Throttle Cable Installation 3-102
Throttle Cable Lubrication 3-102
Throttle Body Assy 3-103
Idle Speed Inspection/Adjustment 3-103
Synchronization Inspection/Adjustment 3-103
Throttle Body Assy Removal 3-103
Throttle Body Assy Installation 3-104
Throttle Body Assy Disassembly 3-105
Throttle Body Assy Assembly 3-106
Air Cleaner 3-107
Air Cleaner Element Removal/Installation 3-107
Air Cleaner Element Inspection 3-107
Air Cleaner Oil Draining 3-107
Air Cleaner Housing Removal 3-107
Air Cleaner Housing Installation 3-108
Fuel Tank 3-109
Fuel Tank Removal 3-109
Fuel Tank Installation 3-111
Fuel Tank and Cap Inspection 3-112
Fuel Tank Cleaning 3-113
Evaporative Emission Control System (CAL, SEA-B1 and TH Models) 3-114
Parts Removal/Installation 3-114
Hose Inspection 3-114
Purge Valve Inspection 3-114
Canister Inspection 3-114

Exploded View

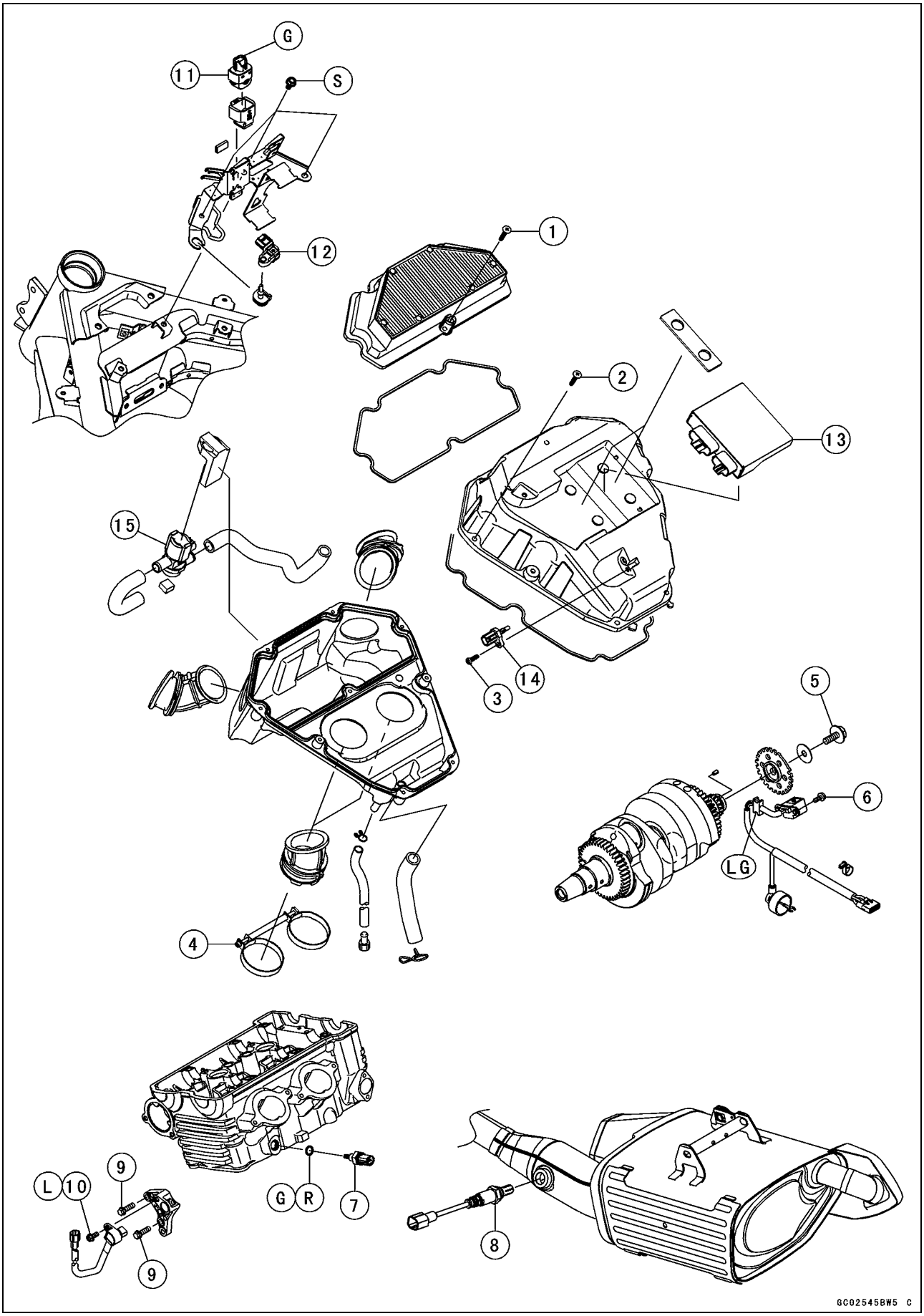

Exploded View

No.	Fastener	Torque			Remarks
		N·m	kgf·m	ft·lb	
1	Air Cleaner Element Screw	1.2	0.12	11 in·lb	
2	Air Cleaner Housing Cover Screws	1.2	0.12	11 in·lb	
3	Intake Air Temperature Sensor Screw	1.2	0.12	11 in·lb	
4	Air Cleaner Housing Clamp Bolt	2.0	0.20	18 in·lb	
5	Timing Rotor Bolt	40	4.1	30	
6	Crankshaft Sensor Bolts	6.0	0.61	53 in·lb	
7	Water Temperature Sensor	12	1.2	106 in·lb	
8	Oxygen Sensor (Equipped Models)	44	4.5	32	
9	Speed Sensor Bracket Bolts	9.8	1.0	87 in·lb	
10	Speed Sensor Bolt	7.8	0.80	69 in·lb	L

11. Vehicle-down Sensor
12. Intake Air Pressure Sensor
13. ECU (Electronic Control Unit)
14. Intake Air Temperature Sensor
15. Air Switching Valve

G: Apply grease.
L: Apply a non-permanent locking agent.
LG: Apply liquid gasket.
R: Replacement Parts
S: Follow the specified tightening sequence.

Exploded View

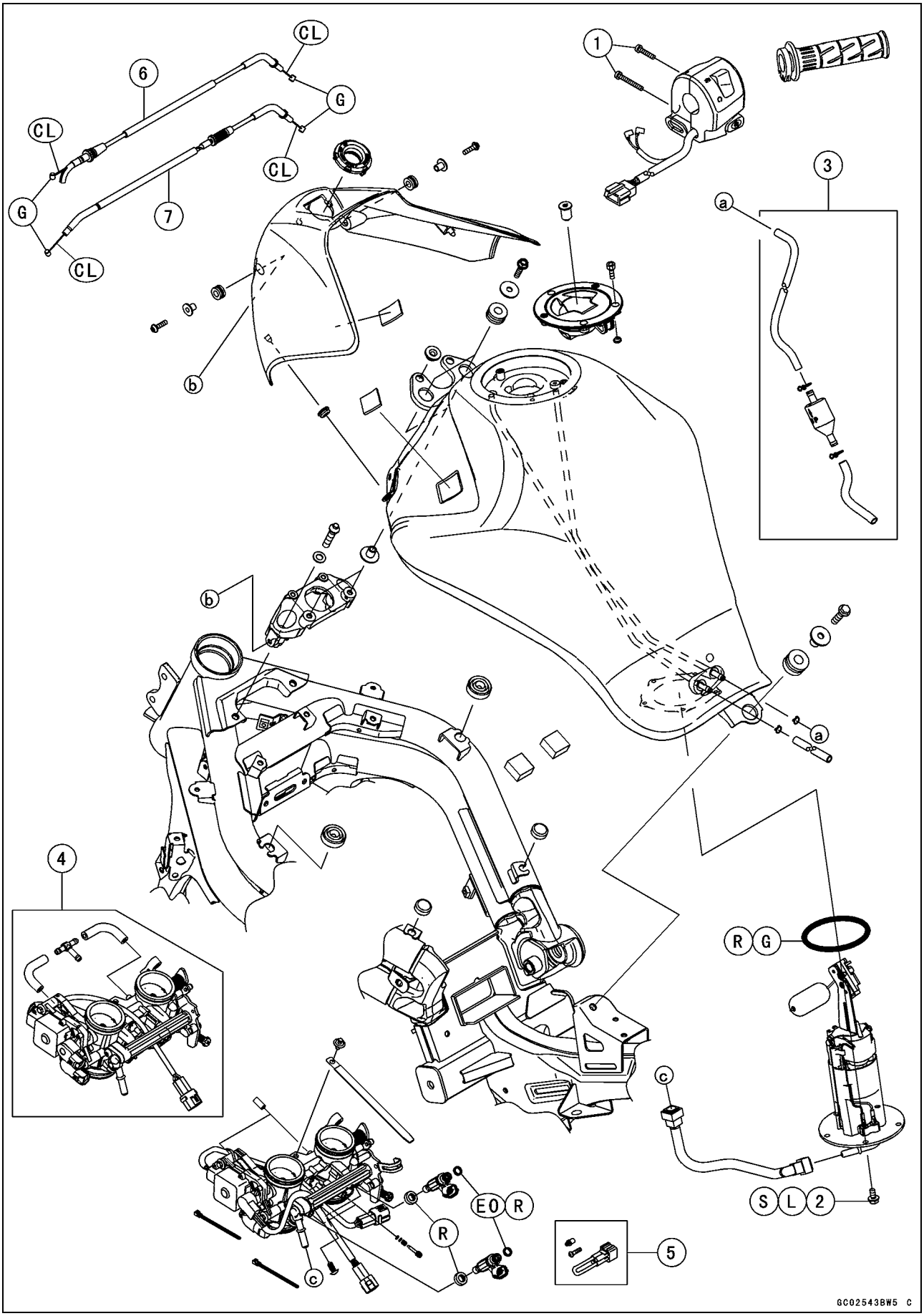

Exploded View

No.	Fastener	Torque			Remarks
		N·m	kgf·m	ft·lb	
1	Switch Housing Screws	3.5	0.36	31 in·lb	
2	Fuel Pump Bolts	9.8	1.0	87 in·lb	L, S

3. Other than CAL, SEA-B1 and TH Models
4. CAL, SEA-B1 and TH Models
5. AU LAMS Model
6. Throttle Cable (Accelerator)
7. Throttle Cable (Decelerator)

CL: Apply cable lubricant.
EO: Apply engine oil.
G: Apply grease.
L: Apply a non-permanent locking agent.
R: Replacement Parts
S: Follow the specified tightening sequence.

Exploded View

CAL, SEA-B1 and TH Models

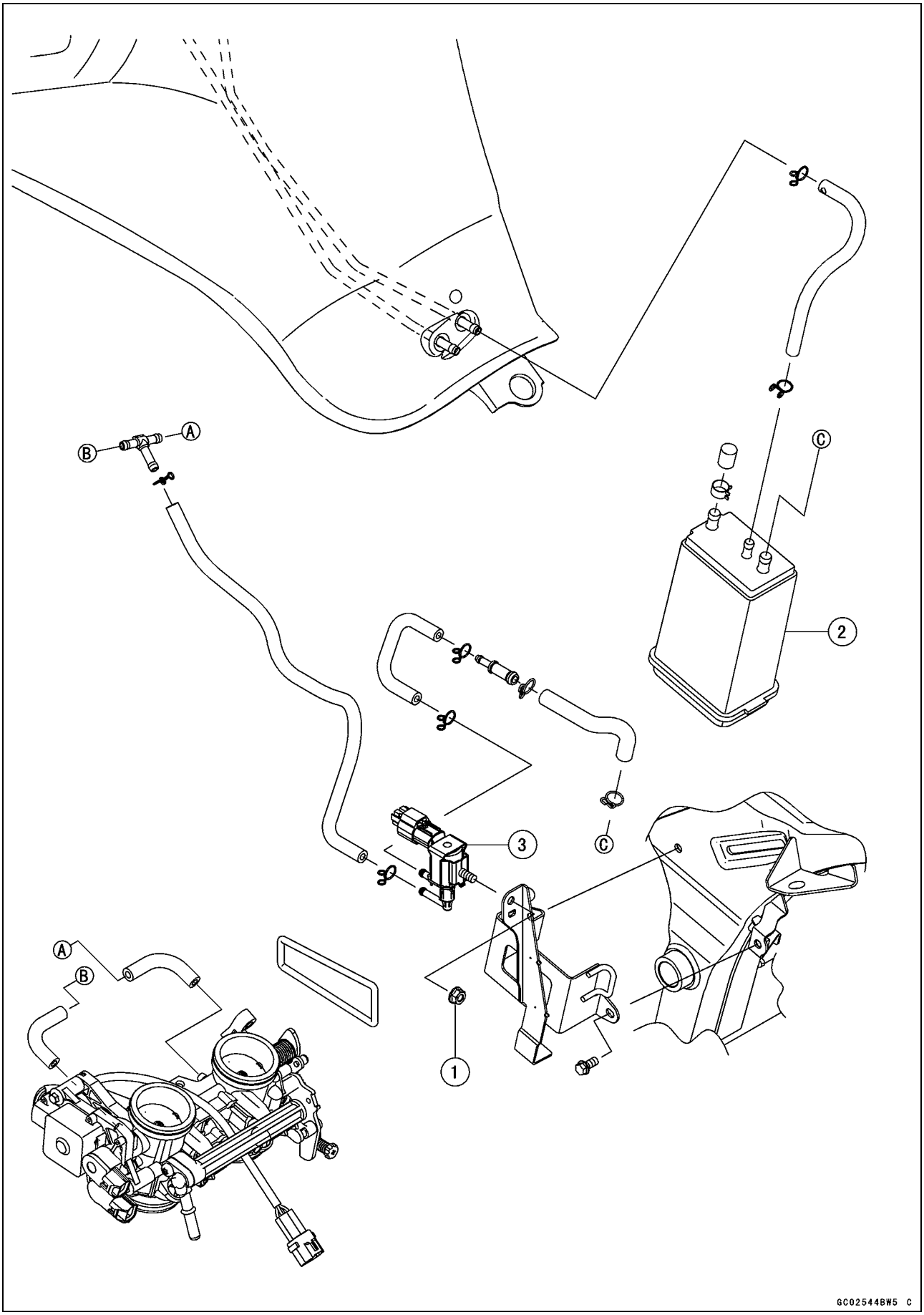

Exploded View

No.	Fastener	Torque			Remarks
		N·m	kgf·m	ft·lb	
1	Purge Valve Mounting Nut	7.0	0.71	62 in·lb	

2. Canister
3. Purge Valve

DFI System

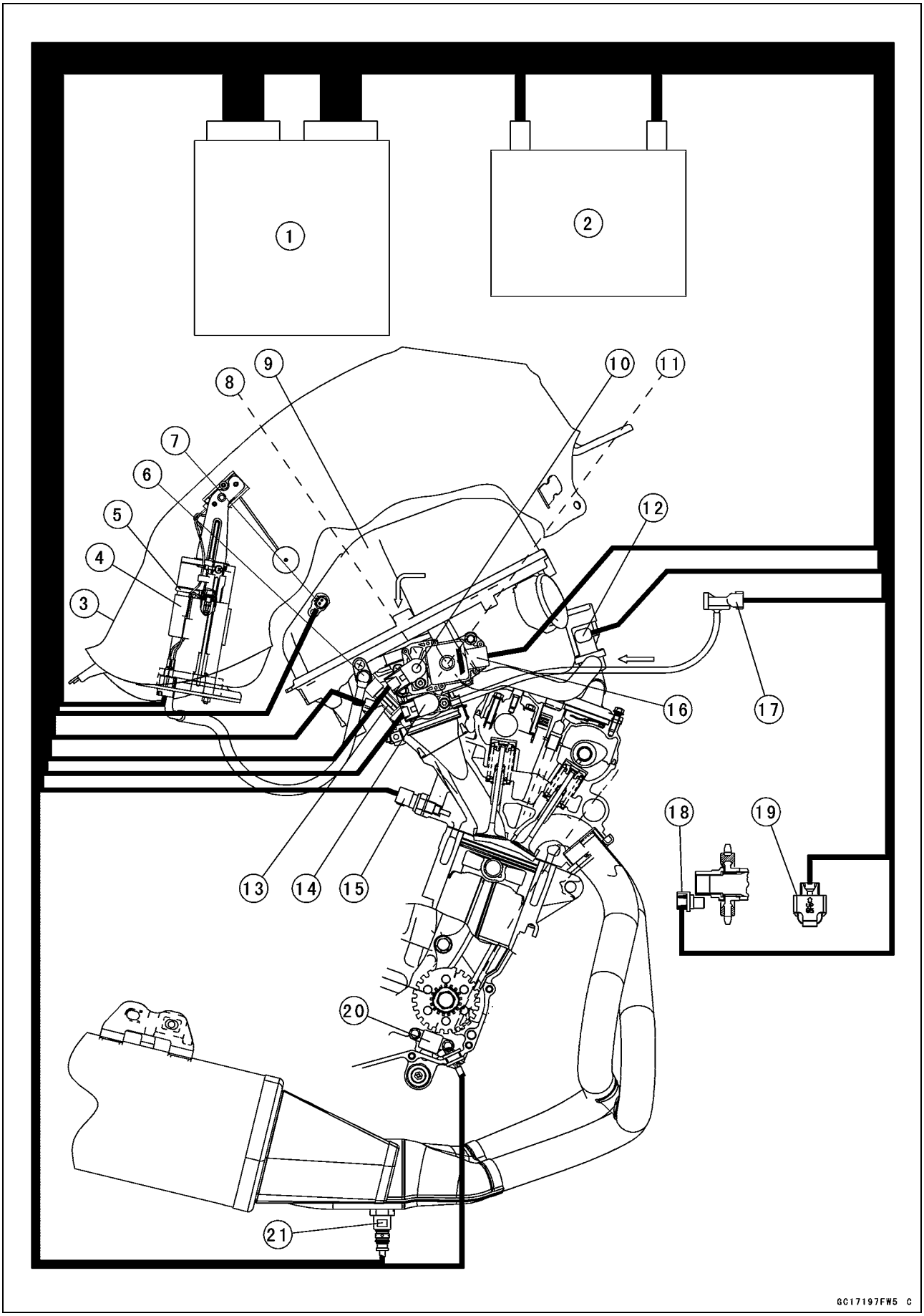

DFI System

1. ECU (Electronic Control Unit)
2. Battery
3. Fuel Tank
4. Fuel Pump
5. Pressure Regulator
6. Delivery Pipe
7. Intake Air Temperature Sensor
8. Subthrottle Valve
9. Air Cleaner Housing
10. Subthrottle Sensor
11. Main Throttle Valve
12. Air Switching Valve
13. Fuel Injectors
14. Main Throttle Sensor
15. Water Temperature Sensor
16. Subthrottle Valve Actuator
17. Intake Air Pressure Sensor
18. Speed Sensor
19. Vehicle-down Sensor
20. Crankshaft Sensor
21. Oxygen Sensor (Equipped Models)

DFI System

DFI System Wiring Diagram

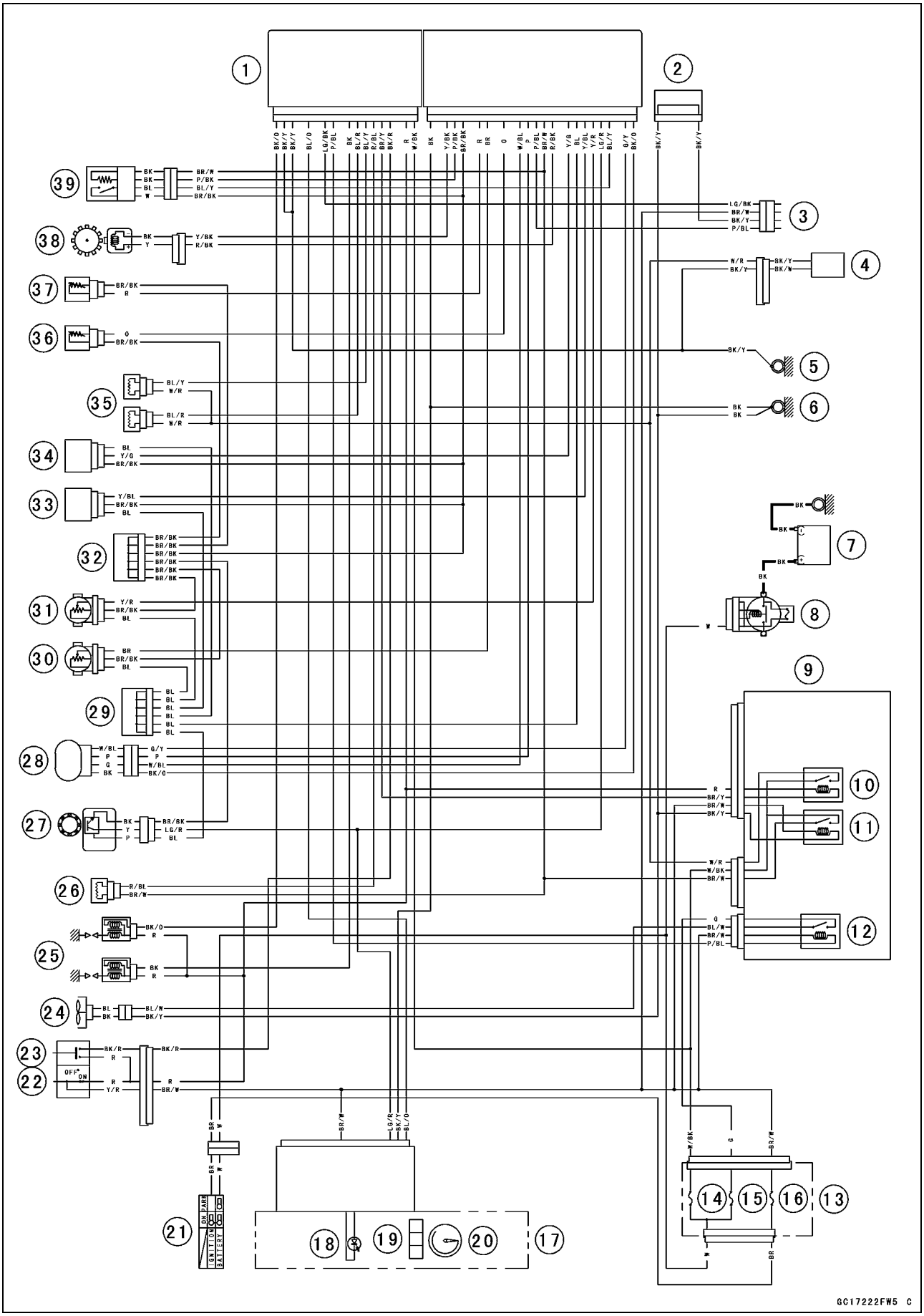

DFI System

Part Name

1. ECU
2. Joint Connector B
3. Kawasaki Diagnostic System Connector
4. Fuel Pump
5. Frame Ground 1
6. Frame Ground 2
7. Battery 12 V 10 Ah
8. Main Fuse 30 A
9. Relay Box
10. Fuel Pump Relay
11. ECU Main Relay
12. Radiator Fan Relay
13. Fuse Box 1
14. FI Fuse 15 A
15. Radiator Fan Fuse 15 A
16. Ignition Fuse 10 A
17. Meter Unit
18. Yellow Engine Warning Indicator Light (LED)
19. Speedometer
20. Tachometer
21. Ignition Switch
22. Engine Stop Switch
23. Starter Button
24. Radiator Fan Motor
25. Stick Coils
26. Air Switching Valve
27. Speed Sensor
28. Subthrottle Valve Actuator
29. Joint Connector C
30. Subthrottle Sensor
31. Main Throttle Sensor
32. Joint Connector D
33. Intake Air Pressure Sensor
34. Vehicle-down Sensor
35. Fuel Injectors
36. Water Temperature Sensor
37. Intake Air Temperature Sensor
38. Crankshaft Sensor
39. Oxygen Sensor (Equipped Models)

○Lead Color Codes:

BK: Black	G: Green	P: Pink
BL: Blue	GY: Gray	PU: Purple
BR: Brown	LB: Light Blue	R: Red
CH: Chocolate	LG: Light Green	W: White
DG: Dark Green	O: Orange	Y: Yellow

DFI System

Terminal Numbers of ECU Connectors

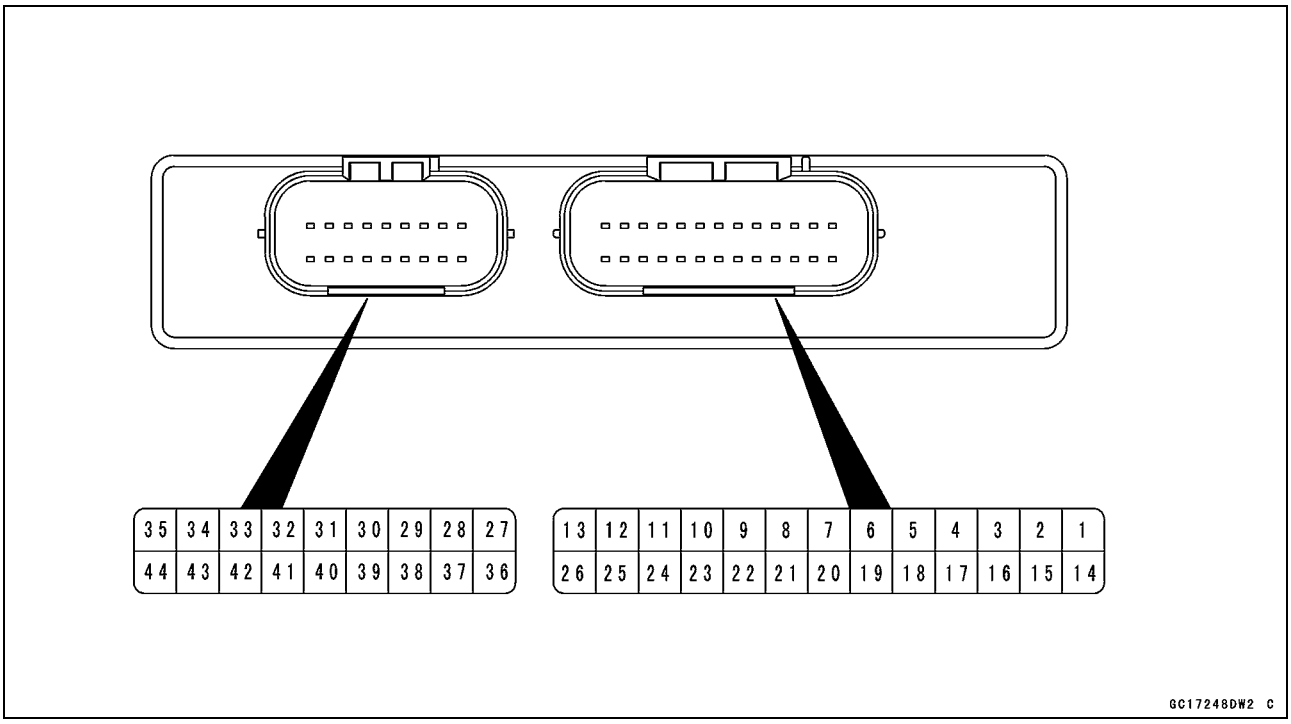

Terminal Names

1. Subthrottle Valve Actuator: BK/O
2. Subthrottle Valve Actuator: G/Y
3. Unused
4. Oxygen Sensor (Equipped Models): BL/Y
5. Speed Sensor: LG/R
6. Main Throttle Sensor: Y/R
7. Intake Air Pressure Sensor: Y/BL
8. Power Supply to Sensors: BL
9. Vehicle-down Sensor: Y/G
10. Neutral Switch: LG
11. Crankshaft Sensor (+): R/BK
12. Power Supply to ECU (from ECU Main Relay): BR/W
13. External Communication Line (Self-diagnosis System): P/BL
14. Subthrottle Valve Actuator: P
15. Subthrottle Valve Actuator: W/BL
16. Unused
17. Water Temperature Sensor: O
18. Unused
19. Subthrottle Sensor: BR
20. Intake Air Temperature Sensor: R
21. Unused
22. Ground for Sensors: BR/BK
23. Oxygen Sensor Heater (Equipped Models): P/BK
24. Crankshaft Sensor (–): Y/BK
25. Purge Valve (CAL, SEA-B1 and TH Models): R/Y
26. Ground for ECU: BK
27. Power Supply to ECU (from Battery): W/BK
28. Engine Stop Switch: R
29. Starter Lockout Switch: R/G
30. Starter Button: BK/R
31. Fuel Pump Relay: BR/Y
32. Air Switching Valve: R/BL
33. Injector #2: BL/Y
34. Injector #1: BL/R
35. Stick Coil #1: BK
36. Sidestand Switch: G/BK
37. Radiator Fan Relay: P/BL
38. External Communication Line: LG/BK
39. Meter Unit (Tachometer): LB
40. External Communication Line (Meter): BL/O
41. –
42. Ground for Fuel System: BK/Y
43. Ground for Ignition System: BK/Y
44. Stick Coil #2: BK/O

DFI Parts Location

Ignition Switch [A]
Relay Box [B] (ECU Main Relay, Radiator Fan Relay, Fuel Pump Relay)
ECU [C]
Intake Air Temperature Sensor [D]
Vehicle-down Sensor [E]
Fuse Box [F] (Oxygen Sensor Heater Fuse 10 A, Radiator Fan Fuse 15 A, ECU Fuse 15 A, Ignition Fuse 10 A)
Intake Air Pressure Sensor [G]

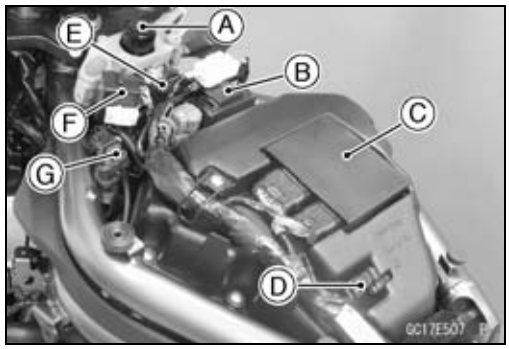

Subthrottle Sensor [A]
Main Throttle Sensor [B]
Subthrottle Valve Actuator [C]

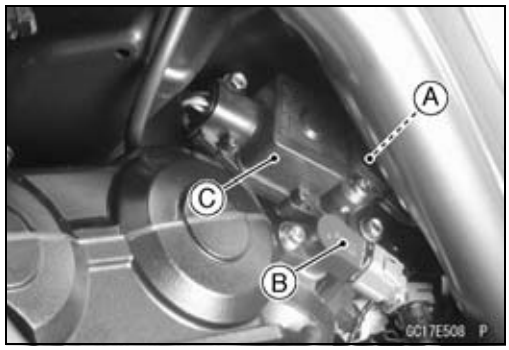

Fuel Injectors #1, #2 [A]

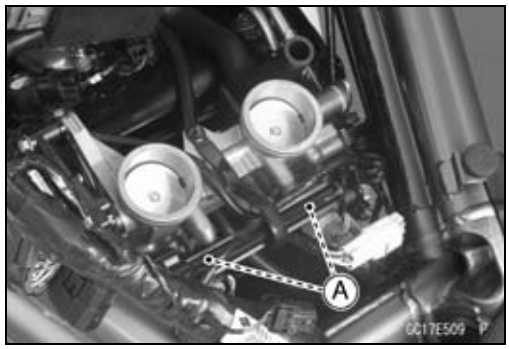

Water Temperature Sensor [A]

Fuel Pump [A]

DFI Parts Location

Battery 12 V 10 Ah [A]
Kawasaki Diagnostic System Connector [B]

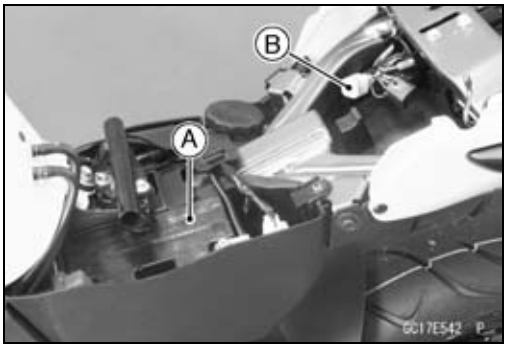

Crankshaft Sensor [A]

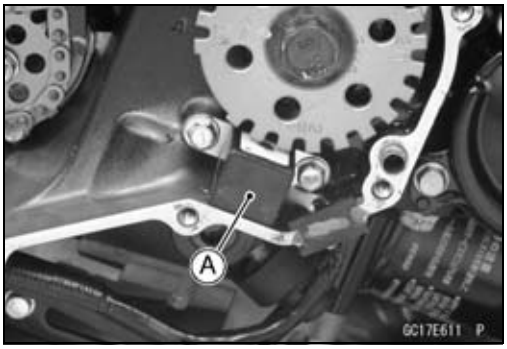

Speed Sensor [A]
Neutral Switch [B]

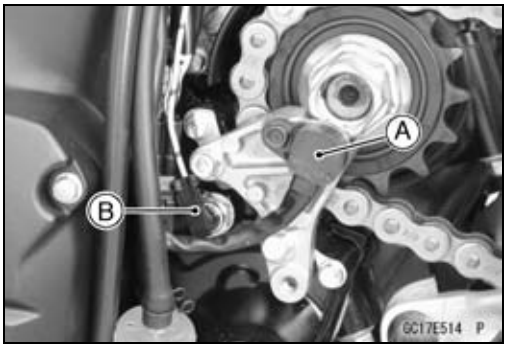

Oxygen Sensor [A] (Equipped Models)

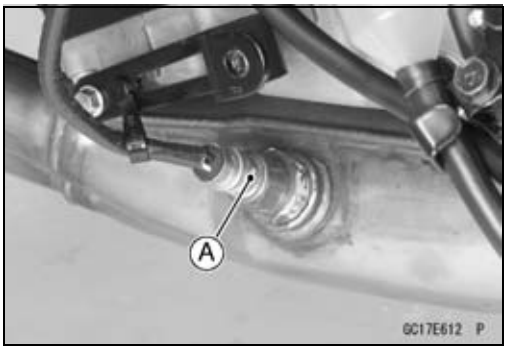

Purge Valve [A] (CAL, SEA-B1 and TH Models)

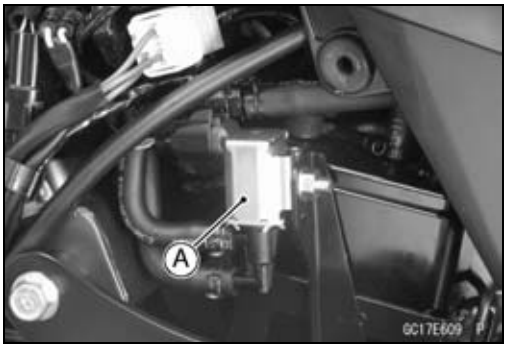

Specifications

Item	Standard
Digital Fuel Injection System	
Idle Speed	1 300 ±50 r/min (rpm)
Throttle Body Assy:	
Throttle Valve	Dual throttle valve
Bore	ϕ38 mm (1.5 in.)
Bypass Screws (Turn out)	0 ~ 2 1/2 (for reference)
ECU (Electronic Control Unit):	
Make	DENSO
Type	Digital memory type, with built in IC igniter, sealed with resin
Usable Engine Speed	100 ~ 11 350 r/min (rpm)
Fuel Pressure (High Pressure Line):	
With Engine Idling	294 kPa (3.0 kgf/cm², 43 psi) with fuel pump running
Fuel Pump:	
Type	In-tank friction pump
Discharge	30 mL (1.0 US oz.) or more for 3 seconds
Fuel Injectors:	
Type	INP-287
Nozzle Type	Fine Atomizing type with 12 holes
Resistance	About 11.7 ~ 12.3 Ω at 20°C (68°F)
Main Throttle Sensor:	Non-adjustable and non-removable
Input Voltage	DC 4.75 ~ 5.25 V
Output Voltage	DC 1.005 ~ 1.035 V at Idle Throttle Opening
	DC 4.2 ~ 4.4 V at Full Throttle Opening
Resistance	4 ~ 6 kΩ
Intake Air Pressure Sensor:	
Input Voltage	DC 4.75 ~ 5.25 V
Output Voltage	DC 3.80 ~ 4.20 V at standard atmospheric pressure (see this text for details)
Intake Air Temperature Sensor:	
Resistance	5.4 ~ 6.6 kΩ at 0°C (32°F)
	0.29 ~ 0.39 kΩ at 80°C (176°F)
Output Voltage	About 2.25 ~ 2.50 V at 20°C (68°F)
Water Temperature Sensor:	
Resistance	see Electrical System chapter
Output Voltage	About 2.80 ~ 2.97 V at 20°C (68°F)
Speed Sensor:	
Input Voltage	About DC 9 ~ 11 V at Ignition Switch ON
Output Voltage	About DC 0.05 ~ 0.07 V or DC 4.5 ~ 4.9 V at Ignition Switch ON and 0 km/h (0 mph)
Vehicle-down Sensor:	
Detection Method	Magnetic flux detection method
Detection Angle	more than 60 ~ 70° for each bank
Input Voltage	DC 4.75 ~ 5.25 V

Specifications

Item	Standard
Output Voltage	with the sensor tilted 60 ~ 70° or more: 0.65 ~ 1.35 V
	with the sensor arrow mark pointed up: 3.55 ~ 4.45 V
Subthrottle Sensor:	Non-adjustable and non-removable
Input Voltage	DC 4.75 ~ 5.25 V
Output Voltage	DC 0.6 ~ 0.8 V at Idle Throttle Opening
	DC 4.08 ~ 4.12 V at Full Throttle Opening
Resistance	4 ~ 6 kΩ
Subthrottle Valve Actuator:	
Input Voltage	About DC 8.5 ~ 10.5 V
Resistance	About 5.5 ~ 7.5 Ω
Oxygen Sensor (Equipped Models):	
Output Voltage (Rich)	DC 0.7 V or more
Output Voltage (Lean)	DC 0.2 V or less
Heater Resistance	11.7 ~ 14.5 Ω at 20°C (68°F)
Purge Valve:	
Resistance	30 ~ 34 Ω at 20°C (68°F)
Throttle Grip and Cables	
Throttle Grip Free Play	2 ~ 3 mm (0.08 ~ 0.12 in.)

Special Tools and Sealant

Oil Pressure Gauge, 5 kgf/cm²:
57001-125

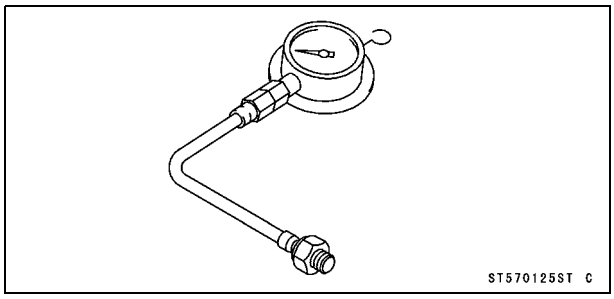

Fork Oil Level Gauge:
57001-1290

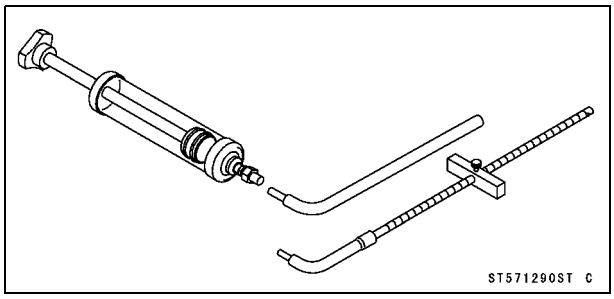

Vacuum Gauge:
57001-1369

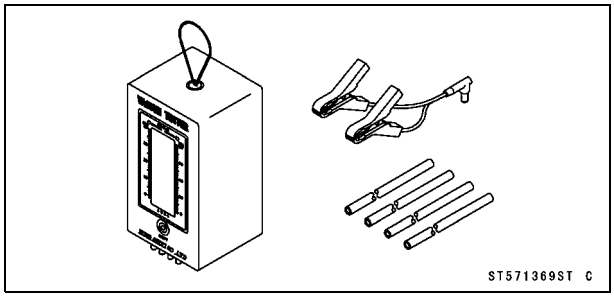

Hand Tester:
57001-1394

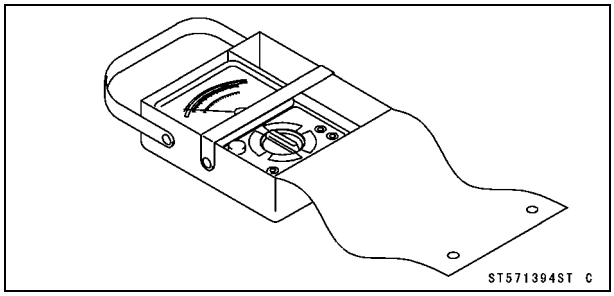

Throttle Sensor Setting Adapter #1:
57001-1400

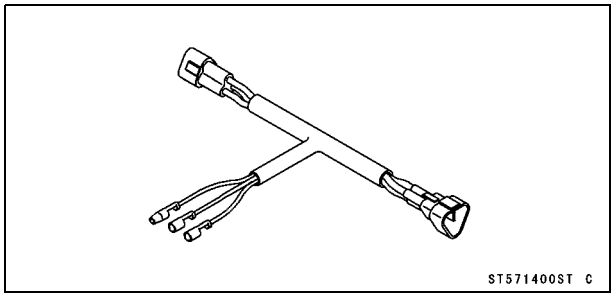

Peak Voltage Adapter:
57001-1415

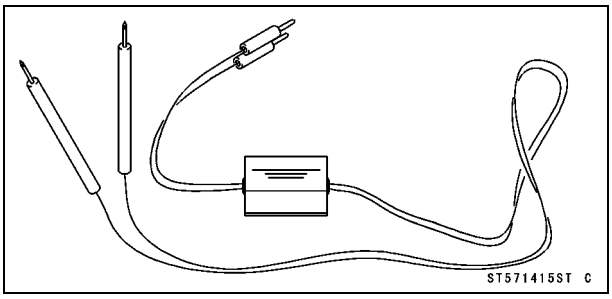

Needle Adapter Set:
57001-1457

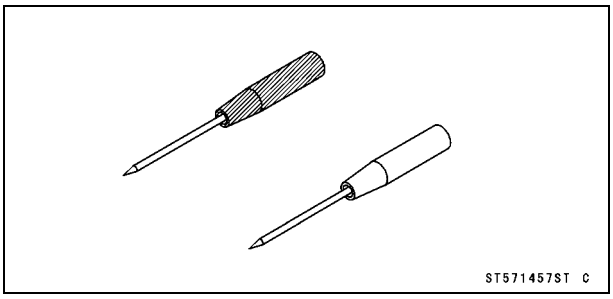

Throttle Sensor Setting Adapter:
57001-1538

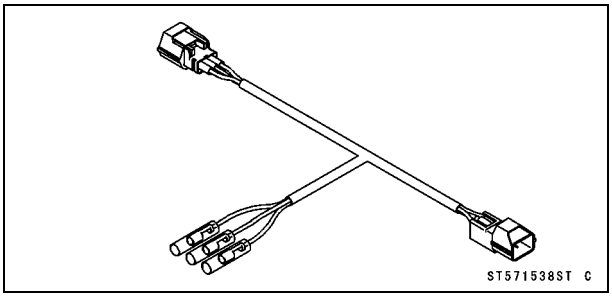

Fuel Pressure Gauge Adapter:
57001-1593

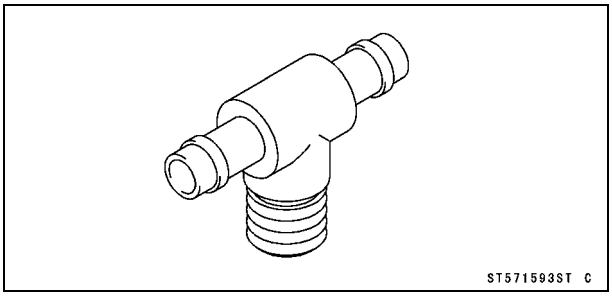

Fuel Hose:
57001-1607

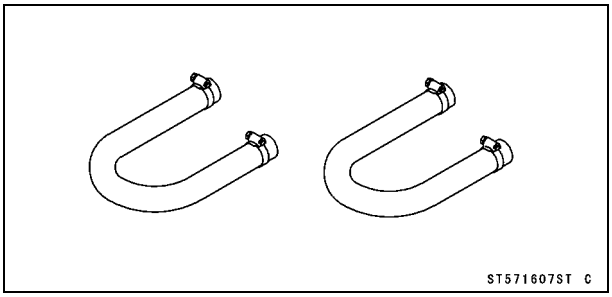

Special Tools and Sealant

Oxygen Sensor Measuring Adapter:
57001-1682

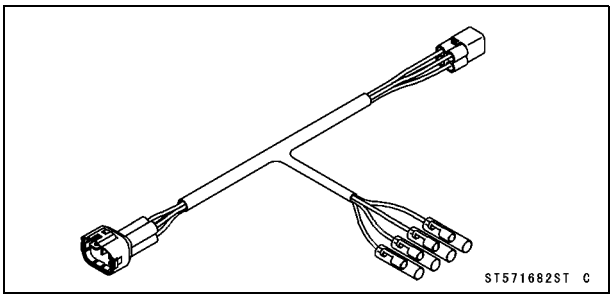

Measuring Adapter:
57001-1700

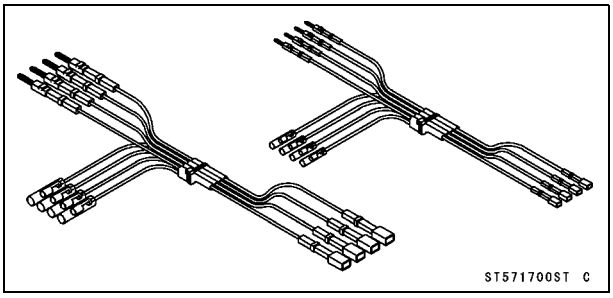

Liquid Gasket, TB1211:
56019-120

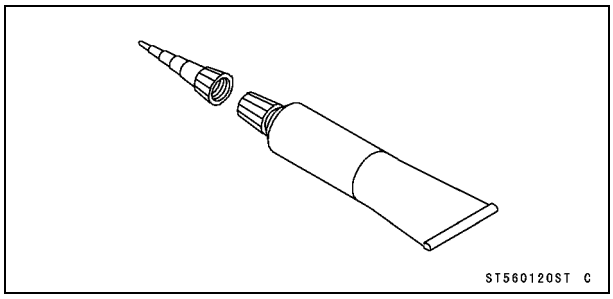

DFI Servicing Precautions

DFI Servicing Precautions

There are a number of important precautions that should be followed servicing the DFI system.

- This DFI system is designed to be used with a 12 V sealed battery as its power source. Do not use any other battery except for a 12 V sealed battery as a power source.
- Do not reverse the battery cable connections. This will damage the ECU.
- To prevent damage to the DFI parts, do not disconnect the battery cables or any other electrical connections when the ignition switch is on or while the engine is running.
- Take care not to short the cables that are directly connected to the battery positive (+) terminal to the chassis ground.
- When charging, remove the battery from the motorcycle. This is to prevent ECU damage by excessive voltage.

- Whenever the DFI electrical connections are to be disconnected, first turn off the ignition switch, and disconnect the battery (–) terminal. Do not pull the lead, only the connector. Conversely, make sure that all the DFI electrical connections are firmly reconnected before starting the engine.
- Connect these connectors until they click [A].

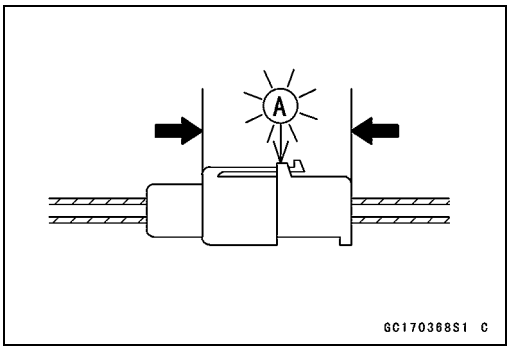

- Do not turn the ignition switch ON while any of the DFI electrical connectors are disconnected. The ECU memorizes service codes.
- Do not spray water on the electrical parts, DFI parts, connectors, leads, and wiring.
- If a transceiver is installed on the motorcycle, make sure that the operation of the DFI system is not influenced by electric wave radiated from the antenna. Check operation of the system with the engine at idle. Locate the antenna as far as possible away from the ECU.
- When any fuel hose is disconnected, fuel may spout out by residual pressure in the fuel line. Cover the hose joint with a piece of clean cloth to prevent fuel spillage.
- When any fuel hose is disconnected, do not turn on the ignition switch. Otherwise, the fuel pump will operate and fuel will spout from the fuel hose.
- Do not operate the fuel pump if the pump is completely dry. This is to prevent pump seizure.
- Before removing the fuel system parts, blow the outer surfaces of these parts clean with compressed air.
- To prevent corrosion and deposits in the fuel system, do not add to fuel any fuel antifreeze chemicals.

DFI Servicing Precautions

○If the motorcycle is not properly handled, the high pressure inside the fuel line can cause fuel to leak or the hose to burst. Remove the fuel tank (see Fuel Tank Removal) and check the fuel hose [A].

★Replace the fuel hose if any fraying, cracks or bulges are noticed (see Fuel Hose Replacement in the Periodic Maintenance chapter).

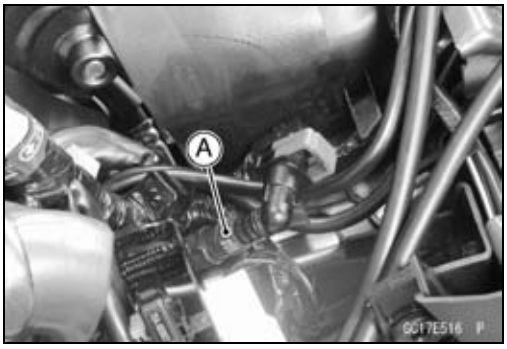

○To maintain the correct fuel/air mixture (F/A), there must be no intake air leaks in the DFI system. Be sure to install the oil filler plug [A] after filling the engine oil.

Torque - Oil Filler Plug: Hand-tighten

Troubleshooting the DFI System

Outline

When a problem occurs with DFI system, the yellow engine warning indicator light (LED) [A] goes on or blinks to alert the rider. In addition, the condition of the problem is stored in the memory of the ECU.

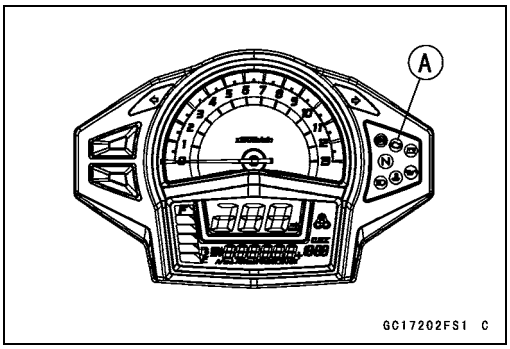

With the engine stopped and turned in the self-diagnosis mode, the service code [A] is displayed on the LCD (Liquid Crystal Display) by the number of two digits.

If the problem is with the following parts, the ECU can not recognize these problem. Therefore, the yellow engine warning indicator light (LED) does not go on, and service code is not displayed.

LCD for Meter Unit
Fuel Pump
Fuel Pump Relay
Fuel Injectors
Stick Coil Secondary Wiring and Ground Wiring
ECU Main Relay
ECU Power Source Wiring and Ground Wiring

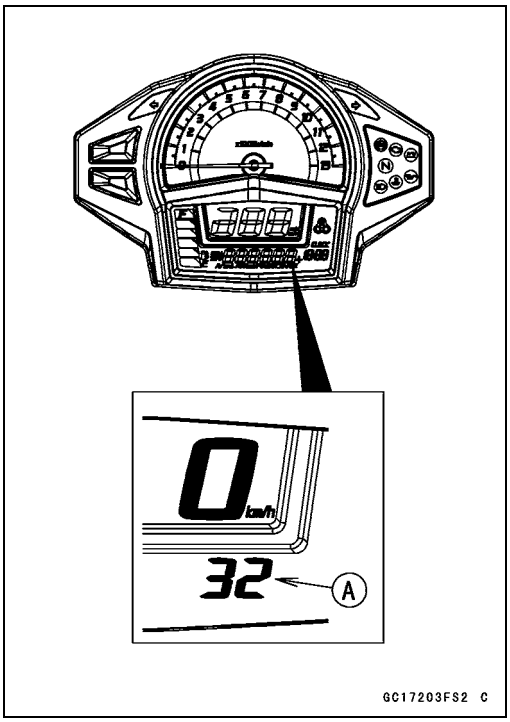

When the service code [A] is displayed, for first ask the rider about the conditions [B] of trouble, and then start to determine the cause [C] of problem.

As a pre-diagnosis inspection, check the ECU for ground and power supply, the fuel line for no fuel leaks, and for correct pressure. The pre-diagnosis items are not indicated by the yellow engine warning indicator light (LED).

Don't rely solely on the DFI self-diagnosis function, use common sense.

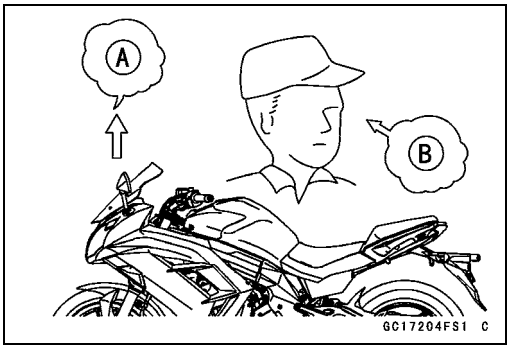

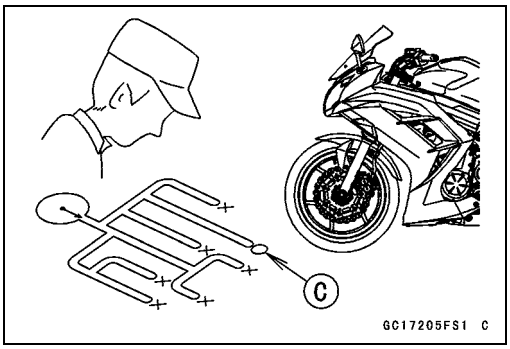

Troubleshooting the DFI System

Even when the DFI system is operating normally, the yellow engine warning indicator light (LED) may go on under strong electrical interference. Additional measures are not required. Turn the ignition switch to OFF to stop the indicator light.

If the yellow engine warning indicator light (LED) of the motorcycle brought in for repair still goes on or blinks, check the service code.

When the repair has been done, the yellow engine warning indicator light (LED) goes off. But the service codes stored in memory of the ECU are not erased to preserve the problem history. The problem history can be referred using the KDS (Kawasaki Diagnostic System) when solving unstable problems.

When the motorcycle is down, the vehicle-down sensor operates and the ECU shuts off the fuel pump relay, fuel injectors and ignition system. The ignition switch is left ON. If the starter button is pushed, the electric starter turns but the engine does not start. When the starter button is pushed, the yellow engine warning indicator light (LED) blinks but the service code is not displayed. To start the engine again, raise the motorcycle, turn the ignition switch to OFF, and then ON.

Much of the DFI system troubleshooting work consists of confirming continuity of the wiring. The DFI parts are assembled and adjusted with precision, and it is impossible to disassemble or repair them.

○The DFI part connectors [A] have seals [B], including the ECU.

- Join the connector and insert the needle adapters [C] inside the seals [B] from behind the connector until the adapter reaches the terminal.

Special Tool - Needle Adapter Set: 57001-1457

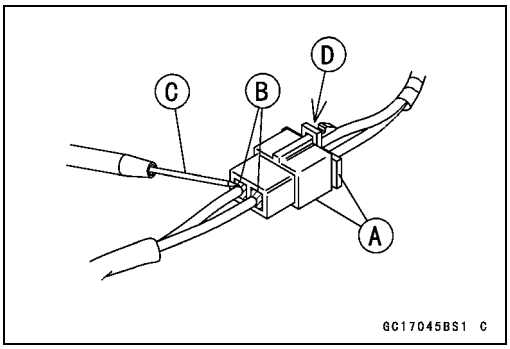

NOTICE

Insert the needle adapter straight along the terminal in the connector to prevent short-circuit between terminals.

- Make sure that measuring points are correct in the connector, noting the position of the lock [D] and the lead color before measurement. Do not reverse connections of the hand tester or a digital meter.
- Be careful not to short-circuit the leads of the DFI or electrical system parts by contact between adapters.
- Turn the ignition switch to ON and measure the voltage with the connector joined.

NOTICE

Incorrect, reverse connection or short circuit by needle adapters could damage the DFI or electrical system parts.

Troubleshooting the DFI System

○After measurement, remove the needle adapters and apply silicone sealant to the seals [A] of the connector [B] for waterproofing.

Sealant - Liquid Gasket, TB1211: 56019-120

● Always check battery condition before replacing the DFI parts. A fully charged battery is a must for conducting accurate tests of the DFI system.

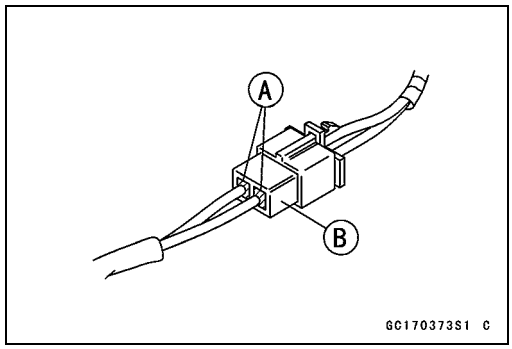

● Trouble may involve one or in some cases all items. Never replace a defective part without determining what CAUSED the problem. If the problem was caused by some other item or items, they too must be repaired or replaced, or the new replacement part will soon fail again.
● Measure the coil winding resistance when the DFI part is cold (at room temperature).
● Make sure all connectors in the circuit are clean and tight, and examine leads for signs of burning, fraying, short, etc. Deteriorated leads and bad connections can cause reappearance of problems and unstable operation of the DFI system.
★If any wiring is deteriorated, replace the wiring.

● Pull each connector [A] apart and inspect it for corrosion, dirt, and damage.
★If the connector is corroded or dirty, clean it carefully. If it is damaged, replace it. Connect the connectors securely.
● Check the wiring for continuity.
○Use the wiring diagram to find the ends of the lead which is suspected of being a problem.
○Connect the hand tester between the ends of the leads.

Special Tool - Hand Tester: 57001-1394

○Set the tester to the × 1 Ω range, and read the tester.
★If the tester does not read 0 Ω, the lead is defective. Replace the lead or the main harness [B] or the sub harness.

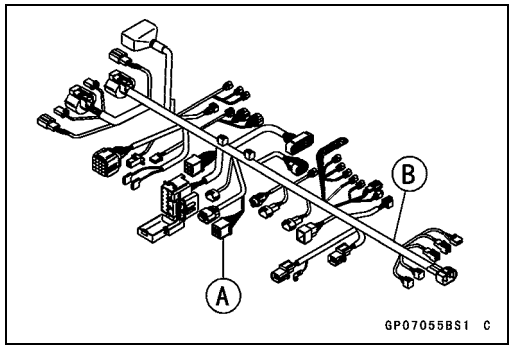

○If both ends of a harness [A] are far apart, ground [B] the one end [C], using a jumper lead [D] and check the continuity between the end [E] and the ground [F]. This enables to check a long harness for continuity. If the harness is open, repair or replace the harness.

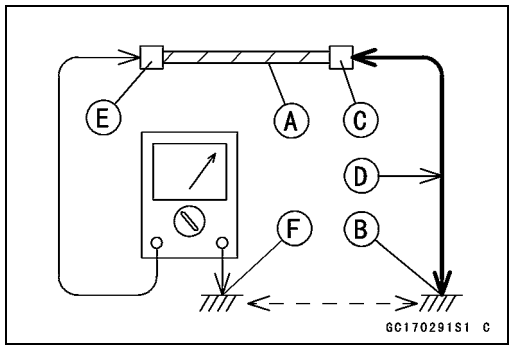

Troubleshooting the DFI System

○When checking a harness [A] for short circuit, open one end [B] and check the continuity between the other end [C] and ground [D]. If there is continuity, the harness has a short circuit to ground, and it must be repaired or replaced.

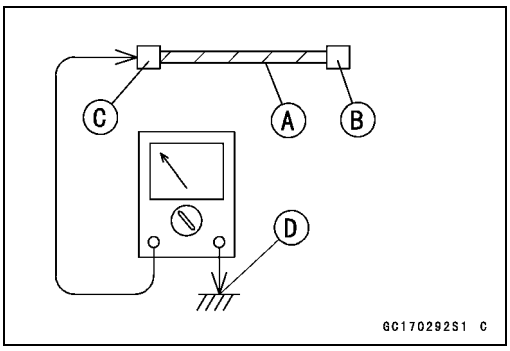

● Narrow down suspicious locations by repeating the continuity tests from the ECU connectors.
★If no abnormality is found in the wiring or connectors, the DFI parts are the next likely suspects. Check the part, starting with input and output voltages. However, there is no way to check the ECU itself.
★If an abnormality is found, replace the affected DFI part.
★If no abnormality is found in the wiring, connectors, and DFI parts, replace the ECU.

DFI Diagnosis Flow Chart

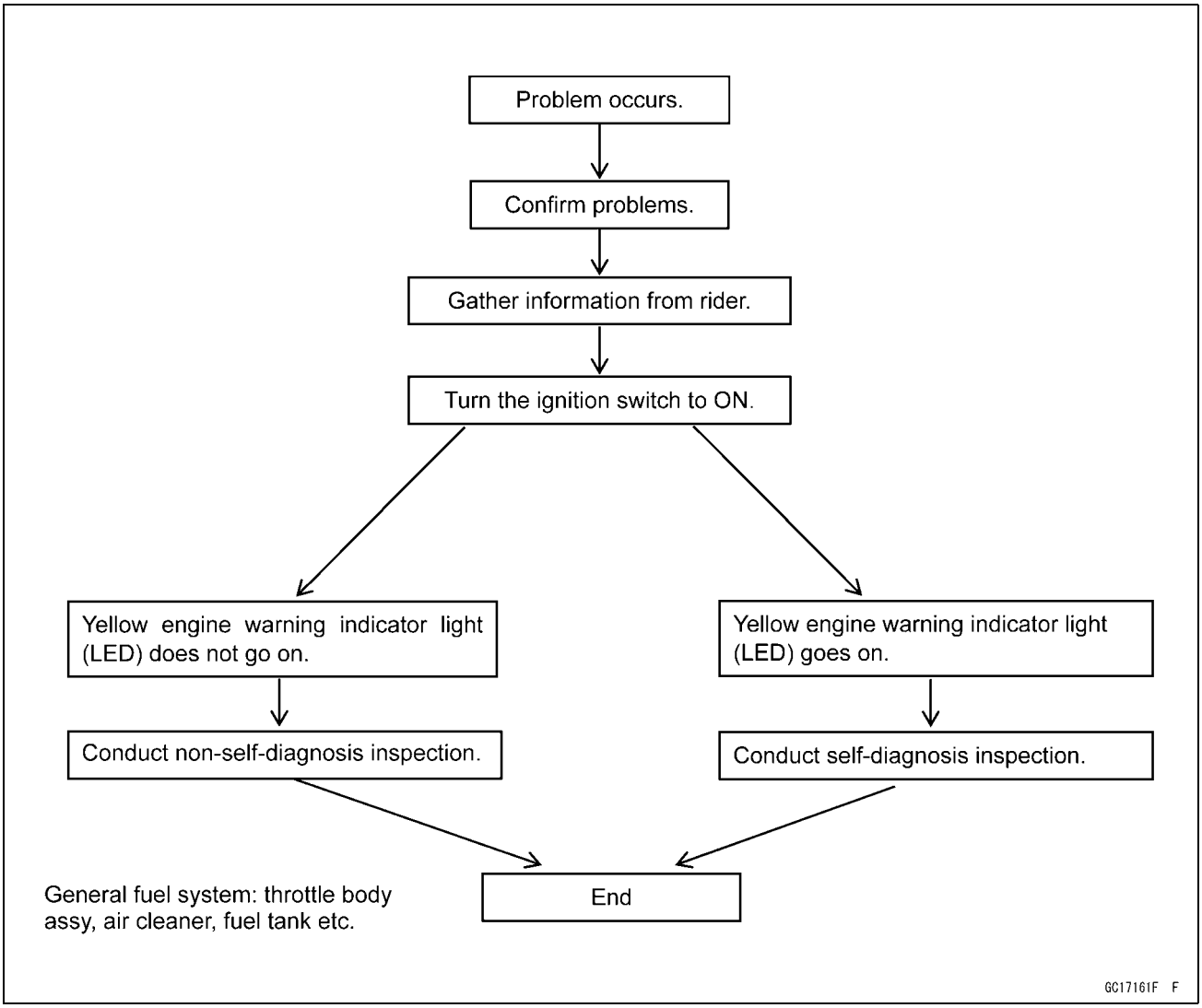

Troubleshooting the DFI System

Inquiries to Rider

○Each rider reacts to problems in different ways, so it is important to confirm what kind of symptoms the rider has encountered.

○Try to find out exactly what problem occurred under exactly what conditions by asking the rider; knowing this information may help you reproduce the problem.

○The following sample diagnosis sheet will help prevent you from overlooking any areas, and will help you decide if it is a DFI system problem, or a general engine problem.

Sample Diagnosis Sheet

Rider name:	**Registration No. (license plate No.):**
Year of initial registration:	**Model:**
Engine No.:	**Frame No.:**
Date problem occurred:	**Mileage:**
Environment when problem occurred.	
Weather	□fine, □cloudy,□rain, □snow, □always, □other:
Temperature	□hot, □warm, □cold, □very cold, □always, □other:
Problem frequency	□chronic, □often, □once
Road	□street, □highway, □mountain road (□uphill, □downhill), □bumpy, □pebble
Altitude	□normal, □high (about 1 000 m or more)
Motorcycle conditions when problem occurred.	
Yellow engine warning indicator light (LED)	□goes on immediately after turning the ignition switch to ON, and goes off after about 2 seconds (normal)
	□goes on immediately after turning the ignition switch to ON, goes off after about 2 seconds, and goes on again after about 10 seconds (ECU communication error)
	□goes on immediately after turning the ignition switch to ON, goes off after about 2 seconds, and goes on again (DFI problem)
	□goes on immediately after turning the ignition switch to ON, and stays on (DFI problem)
	□does not go on after turning the ignition switch to ON (light (LED), ECU or its wiring fault)
Starting difficulty	□starter motor not rotating
	□starter motor rotating but engine doesn't turn over
	□starter motor and engine don't turn over
	□no fuel flow (□no fuel in tank, □no fuel pump sound)
	□engine flooded (do not crank engine with throttle opened, which promotes engine flooding)
	□no spark
	□other
Engine stops	□right after starting
	□when opening throttle grip
	□when closing throttle grip
	□when moving off
	□when stopping the motorcycle
	□when cruising
	□other

Troubleshooting the DFI System

Poor running at low speed	☐very low idle speed, ☐very high idle speed, ☐rough idle speed
	☐battery voltage is low (charge the battery)
	☐spark plug loose (tighten it)
	☐spark plug dirty, broken, or gap maladjusted (remedy it)
	☐backfiring
	☐afterfiring
	☐hesitation when acceleration
	☐engine oil viscosity too high
	☐brake dragging
	☐engine overheating
	☐clutch slipping
	☐other
Poor running or no power at high speed	☐spark plug loose (tighten it)
	☐spark plug dirty, broken, or gap maladjusted (remedy it)
	☐spark plug incorrect (replace it)
	☐knocking (fuel poor quality or incorrect, → use high-octane gasoline)
	☐brake dragging
	☐clutch slipping
	☐engine overheating
	☐engine oil level too high
	☐engine oil viscosity too high
	☐other

DFI System Troubleshooting Guide

NOTE

○*This is not an exhaustive list, giving every possible cause for each problem listed. It is meant simply as a rough guide to assist the troubleshooting for some of the more common difficulties in DFI system.*

○*The ECU may be involved in the DFI electrical and ignition system troubles. If these parts and circuits are checked out good, be sure to check the ECU for ground and power supply. If the ground and power supply are checked good, replace the ECU.*

Engine Won't Turn Over

Symptoms or Possible Causes	Actions
Neutral, starter lockout or sidestand switch trouble	Inspect each switch (see chapter 16).
Vehicle-down sensor operated	Turn the ignition switch to OFF (see chapter 3).
Vehicle-down sensor trouble	Inspect (see chapter 3).
Crankshaft sensor trouble	Inspect (see chapter 16).
Stick coil shorted or not in good contact	Inspect or Reinstall (see chapter 16).
Stick coil trouble	Inspect (see chapter 16).
Spark plug dirty, broken or gap maladjusted	Inspect and replace (see chapter 2).
Spark plug incorrect	Replace it with the correct plug (see chapter 2).
ECU ground and power supply trouble	Inspect (see chapter 3).
ECU trouble	Inspect (see chapter 3).
No or little fuel in tank	Supply fuel (see Owner's Manual).
Fuel injector trouble	Inspect and replace (see chapter 3).
Fuel pump not operating	Inspect (see chapter 3).
Fuel pump relay trouble	Inspect and replace (see chapter 3).
Fuel filter or pump screen clogged	Inspect and replace fuel pump (see chapter 3).
Fuel pressure regulator trouble	Inspect fuel pressure and replace fuel pump (see chapter 3).
Fuel line clogged	Inspect and repair (see chapter 3).

Poor Running at Low Speed

Symptoms or Possible Causes	Actions
Spark weak:	
Stick coil shorted or not in good contact	Inspect or Reinstall (see chapter 16).
Stick coil trouble	Inspect (see chapter 16).
Spark plug dirty, broken or gap maladjusted	Inspect and replace (see chapter 2).
Spark plug incorrect	Replace it with the correct plug (see chapter 2).
ECU trouble	Inspect (see chapter 3).
Fuel/air mixture incorrect:	
Little fuel in tank	Supply fuel (see Owner's Manual).
Air cleaner clogged, poorly sealed, or missing	Clean element or inspect sealing (see chapter 2).
Air duct loose	Reinstall (see chapter 3).
Throttle body assy holder loose	Reinstall (see chapter 3).
Throttle body assy dust seal damage	Replace (see chapter 3).
Fuel injector O-ring damage	Replace (see chapter 3).
Fuel filter or pump screen clogged	Inspect and replace fuel pump (see chapter 3).

DFI System Troubleshooting Guide

Symptoms or Possible Causes	Actions
Fuel pressure regulator trouble	Inspect fuel pressure and replace fuel pump (see chapter 3).
Fuel line clogged	Inspect and repair (see chapter 3).
Intake air pressure sensor trouble	Inspect (see chapter 3).
Water temperature sensor trouble	Inspect (see chapter 3).
Intake air temperature sensor trouble	Inspect (see chapter 3).
Main throttle sensor trouble	Inspect (see chapter 3).
Subthrottle sensor trouble	Inspect (see chapter 3).
Subthrottle valve actuator trouble	Inspect (see chapter 3).
Unstable (rough) idling:	
Fuel pressure too low or too high	Inspect (see chapter 3).
Fuel injector trouble	Inspect (see chapter 3).
Main throttle sensor trouble	Inspect (see chapter 3).
Subthrottle sensor trouble	Inspect (see chapter 3).
Subthrottle valve actuator trouble	Inspect (see chapter 3).
Engine vacuum not synchronizing	Inspect and adjust (see chapter 2).
Intake air pressure sensor trouble	Inspect (see chapter 3).
Water temperature sensor trouble	Inspect (see chapter 3).
Intake air temperature sensor trouble	Inspect (see chapter 3).
Engine stalls easily:	
Spark plug dirty, broken or gap maladjusted	Inspect and replace (see chapter 2).
Stick coil trouble	Inspect (see chapter 16).
Main throttle sensor trouble	Inspect (see chapter 3).
Subthrottle sensor trouble	Inspect (see chapter 3).
Subthrottle valve actuator trouble	Inspect (see chapter 3).
Intake air pressure sensor trouble	Inspect (see chapter 3).
Water temperature sensor trouble	Inspect (see chapter 3).
Intake air temperature sensor trouble	Inspect (see chapter 3).
Fuel pump trouble	Inspect (see chapter 3).
Fuel injector trouble	Inspect (see chapter 3).
Fuel pressure too low or too high	Inspect (see chapter 3).
Fuel pressure regulator trouble	Inspect fuel pressure and replace fuel pump (see chapter 3).
Fuel line clogged	Inspect and repair (see chapter 3).
Poor acceleration:	
Fuel pressure too low	Inspect (see chapter 3).
Water or foreign matter in fuel	Change fuel. Inspect and clean fuel system (see chapter 3).
Fuel filter or pump screen clogged	Inspect and replace fuel pump (see chapter 3).
Fuel pump trouble	Inspect (see chapter 3).
Fuel injector trouble	Inspect (see chapter 3).
Main throttle sensor trouble	Inspect (see chapter 3).
Subthrottle sensor trouble	Inspect (see chapter 3).
Subthrottle valve actuator trouble	Inspect (see chapter 3).
Intake air pressure sensor trouble	Inspect (see chapter 3).

DFI System Troubleshooting Guide

Symptoms or Possible Causes	Actions
Water temperature sensor trouble	Inspect (see chapter 3).
Intake air temperature sensor trouble	Inspect (see chapter 3).
Spark plug dirty, broken or gap maladjusted	Inspect and replace (see chapter 2).
Stick coil trouble	Inspect (see chapter 16).
Stumble:	
Fuel pressure too low	Inspect (see chapter 3).
Fuel injector trouble	Inspect (see chapter 3).
Main throttle sensor trouble	Inspect (see chapter 3).
Subthrottle sensor trouble	Inspect (see chapter 3).
Subthrottle valve actuator trouble	Inspect (see chapter 3).
Intake air pressure sensor trouble	Inspect (see chapter 3).
Water temperature sensor trouble	Inspect (see chapter 3).
Intake air temperature sensor trouble	Inspect (see chapter 3).
Surge:	
Unstable fuel pressure	Fuel pressure regulator trouble (Inspect and replace fuel pump) or kinked fuel line (Inspect and replace fuel pump) (see chapter 3).
Fuel injector trouble	Inspect (see chapter 3).
Water temperature sensor trouble	Inspect (see chapter 3).
Backfiring when deceleration:	
Spark plug dirty, broken or gap maladjusted	Inspect and replace (see chapter 2).
Fuel pressure too low	Inspect (see chapter 3).
Fuel pump trouble	Inspect (see chapter 3).
Main throttle sensor trouble	Inspect (see chapter 3).
Subthrottle sensor trouble	Inspect (see chapter 3).
Subthrottle valve actuator trouble	Inspect (see chapter 3).
Intake air pressure sensor trouble	Inspect (see chapter 3).
Water temperature sensor trouble	Inspect (see chapter 3).
Intake air temperature sensor trouble	Inspect (see chapter 3).
Air switching valve trouble	Inspect and replace (see chapter 16).
Air suction valve trouble	Inspect and replace (see chapter 5).
After fire:	
Spark plug burned or gap maladjusted	Replace (see chapter 2).
Fuel injector trouble	Inspect (see chapter 3).
Intake air pressure sensor trouble	Inspect (see chapter 3).
Water temperature sensor trouble	Inspect (see chapter 3).
Intake air temperature sensor trouble	Inspect (see chapter 3).
Other:	
Intermittent any DFI fault and its recovery	Check that DFI connectors are clean and tight, and examine leads for signs of burning or fraying (see chapter 3).

DFI System Troubleshooting Guide

Poor Running or No Power at High Speed

Symptoms or Possible Causes	Actions
Firing incorrect:	
Stick coil shorted or not in good contact	Inspect or Reinstall (see chapter 16).
Stick coil trouble	Inspect (see chapter 16).
Spark plug dirty, broken or gap maladjusted	Inspect and replace (see chapter 2).
Spark plug incorrect	Replace it with the correct plug (see chapter 2).
ECU trouble	Inspect (see chapter 3).
Fuel/air mixture incorrect:	
Air cleaner clogged, poorly sealed, or missing	Clean element or inspect sealing (see chapter 2).
Air duct loose	Reinstall (see chapter 3).
Throttle body assy holder loose	Reinstall (see chapter 3).
Throttle body assy dust seal damage	Replace (see chapter 3).
Water or foreign matter in fuel	Change fuel. Inspect and clean fuel system (see chapter 3).
Fuel injector O-ring damage	Replace (see chapter 3).
Fuel injector clogged	Inspect and repair (see chapter 3).
Fuel line clogged	Inspect and repair (see chapter 3).
Fuel pump operates intermittently and often DFI fuse blows.	Fuel pump bearings may wear. Replace the fuel pump (see chapter 3).
Fuel pump trouble	Inspect (see chapter 3).
Intake air pressure sensor trouble	Inspect (see chapter 3).
Cracked or obstructed intake air pressure sensor vacuum hose	Inspect and repair or replace (see chapter 3).
Water temperature sensor trouble	Inspect (see chapter 3).
Intake air temperature sensor trouble	Inspect (see chapter 3).
Main throttle sensor trouble	Inspect (see chapter 3).
Subthrottle sensor trouble	Inspect (see chapter 3).
Subthrottle valve actuator trouble	Inspect (see chapter 3).
Knocking:	
Fuel poor quality or incorrect	Fuel change (Use the gasoline recommended in the Owner's Manual).
Spark plug incorrect	Replace it with the correct plug (see chapter 2).
Stick coil trouble	Inspect (see chapter 16).
ECU trouble	Inspect (see chapter 3).
Engine vacuum not synchronizing	Inspect and adjust (see chapter 2).
Intake air pressure sensor trouble	Inspect (see chapter 3).
Water temperature sensor trouble	Inspect (see chapter 3).
Intake air temperature sensor trouble	Inspect (see chapter 3).
Miscellaneous:	
Subthrottle sensor trouble	Inspect (see chapter 3).
Subthrottle valve actuator trouble	Inspect (see chapter 3).
Speed sensor trouble	Inspect (see chapter 3).
Throttle valves will not fully open	Inspect throttle cables and lever linkage (see chapter 3).

DFI System Troubleshooting Guide

Symptoms or Possible Causes	Actions
Engine overheating - Water temperature sensor, crankshaft sensor or speed sensor trouble	(see Overheating of Troubleshooting Guide in chapter 17)
Air switching valve trouble	Inspect and replace (see chapter 16).
Air suction valve trouble	Inspect and replace (see chapter 5).
Exhaust Smokes Excessively:	
(Black smoke)	
Air cleaner element clogged	Clean element (see chapter 2).
Fuel pressure too high	Inspect (see chapter 3).
Fuel injector trouble	Inspect (see chapter 3).
Water temperature sensor trouble	Inspect (see chapter 3).
Intake air temperature sensor trouble	Inspect (see chapter 3).
(Brown smoke)	
Air duct loose	Reinstall (see chapter 3).
Fuel pressure too low	Inspect (see chapter 3).
Water temperature sensor trouble	Inspect (see chapter 3).
Intake air temperature sensor trouble	Inspect (see chapter 3).

Self-Diagnosis

Self-diagnosis Outline

The self-diagnosis system has 2 modes and can be switched to another mode by operating the meter unit.

User Mode

The ECU notifies the rider of troubles in DFI system and ignition system by lighting the yellow engine warning indicator light (LED) [A] when DFI and ignition system parts are faulty, and initiates fail-safe function. In case of serious troubles ECU stops the injection and ignition operations.

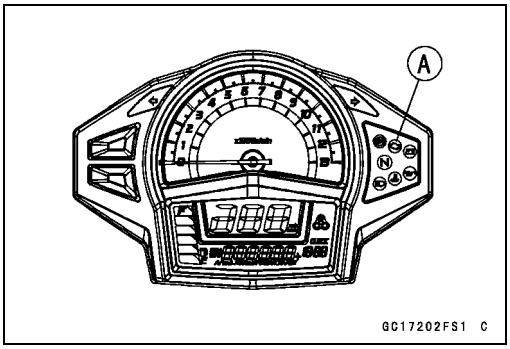

Dealer Mode

The LCD (Liquid Crystal Display) displays the service code(s) [A] to show the problem(s) which the DFI system and ignition system has at the moment of diagnosis.

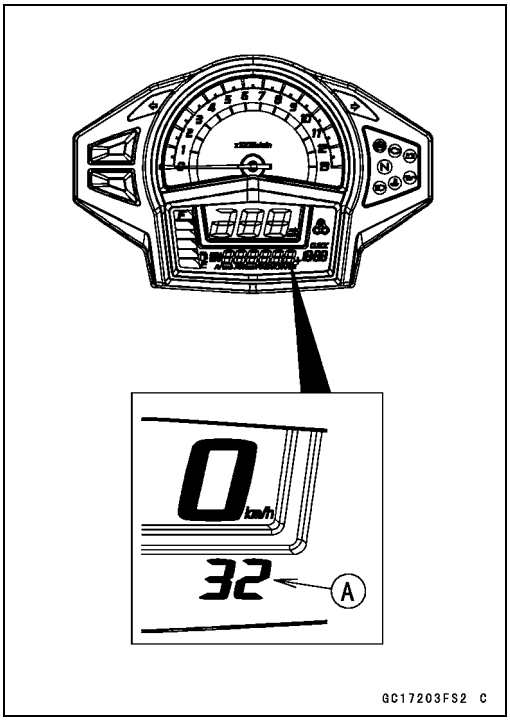

Self-diagnosis Procedures

○When a problem occurs with the DFI system and ignition system, the yellow engine warning indicator light (LED) [A] goes on.

NOTE

○*Use a fully charged battery when conducting self-diagnosis. Otherwise, the light (LED) does not go on.*

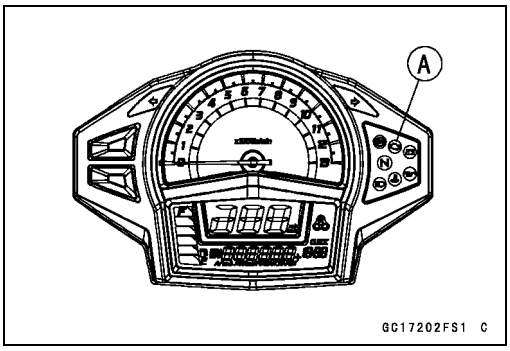

Self-Diagnosis

- Turn the ignition switch to ON.
- Press the upper button [A] to display the odometer [B].

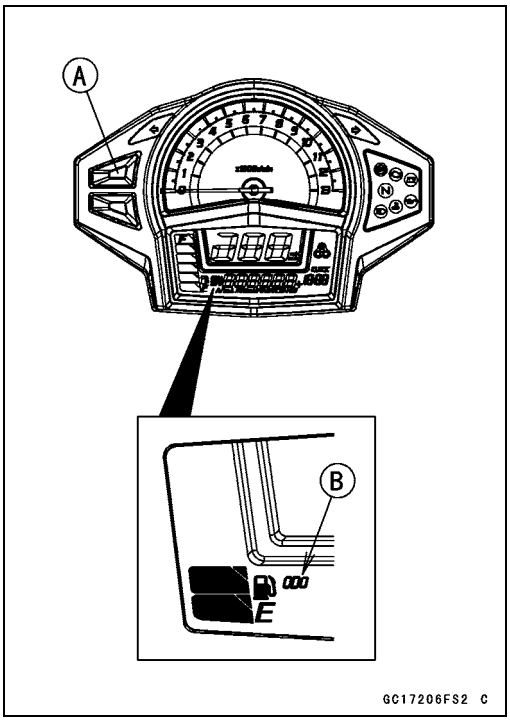

- Press the upper button [A] for more than 2 seconds.
- The service code [B] is displayed on the LCD by the number of two digits.

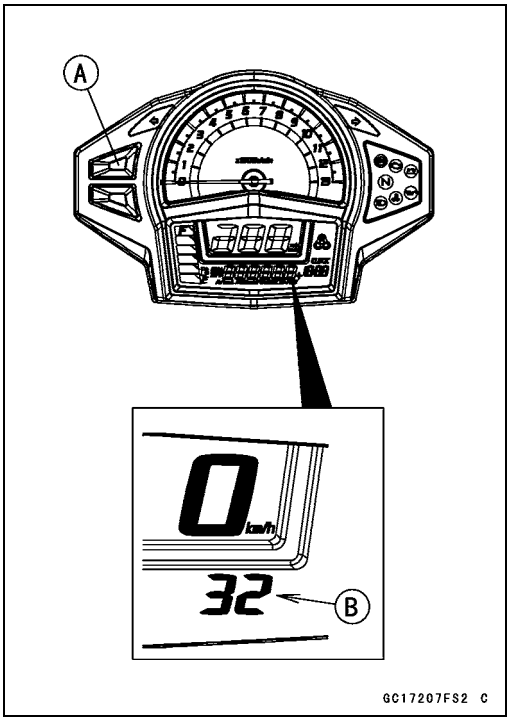

- Any of the following procedures ends self-diagnosis.

○When the service code is displayed on the LCD, press the upper button for more than 2 seconds.

○Turn the ignition switch to OFF.

Self-Diagnosis

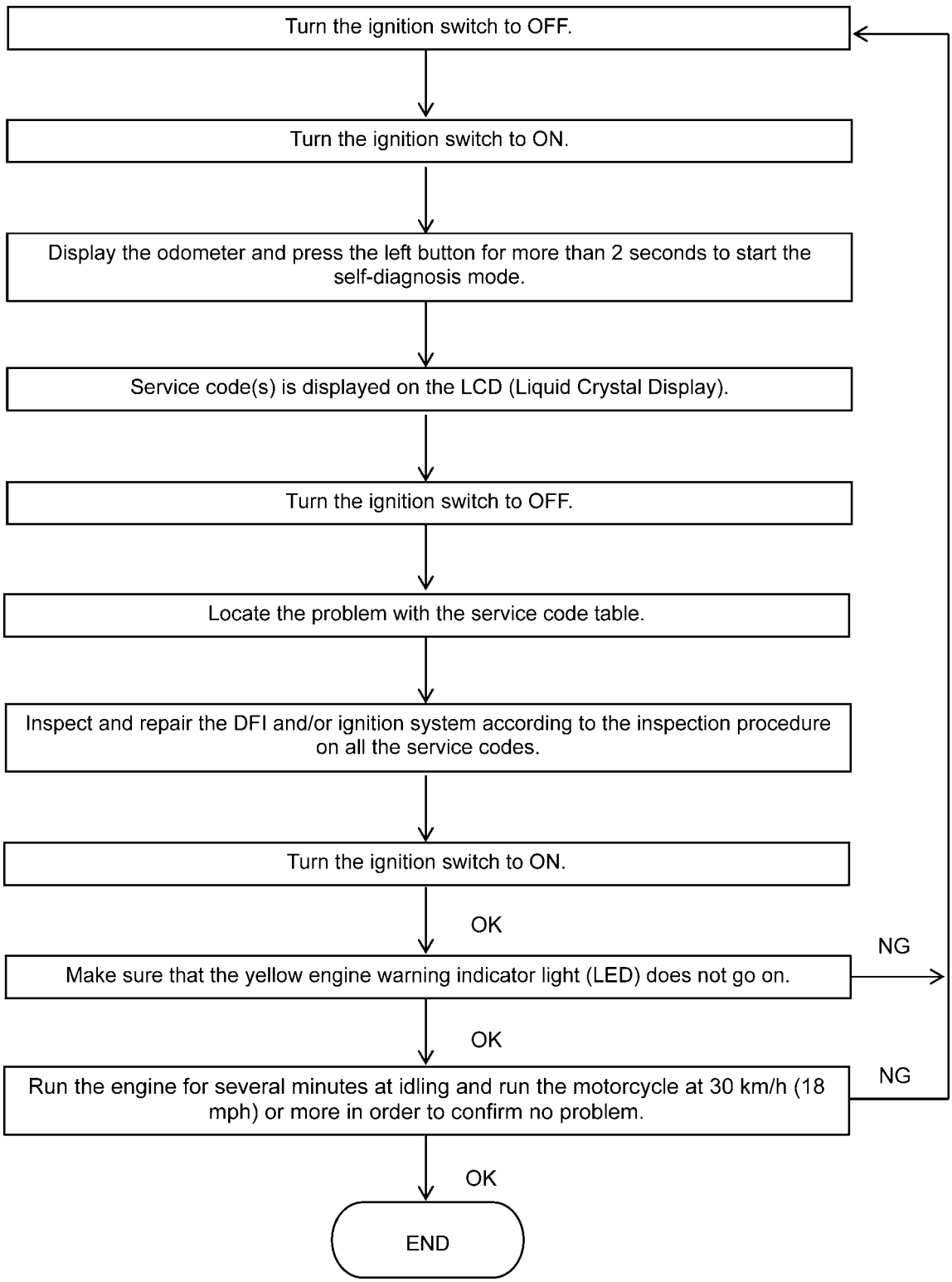

GC17169F F

Self-Diagnosis

Service Code Reading

○The service code(s) is displayed on the LCD by the number of two digits.

○When there are a number of problems, all the service codes can be stored and the display will begin starting from the lowest number service code in the numerical order.

○Then after completing all codes, the display is repeated until the ignition switch is turned to OFF or the upper button is pressed for more than 2 seconds.

○For example, if three problems occurred in the order of 56, 14, 31, the service codes are displayed (each two seconds) from the lowest number in the order listed as shown below. (14 → 31 → 56)→(14 → 31→ 56) →· · ·(repeated)

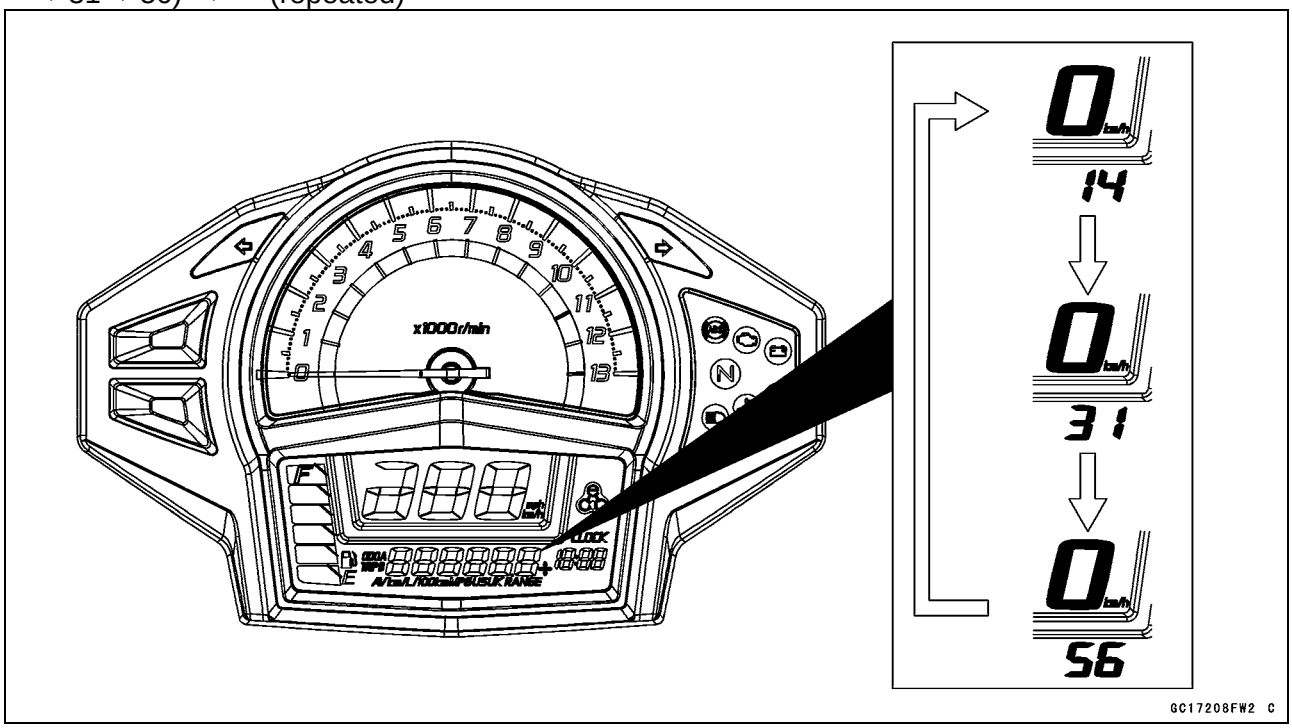

○If there is no problem or when the repair has been done, the yellow engine warning indicator light (LED) goes off and service code is not displayed.

Service Code Erasing

○When repair has been done, the yellow engine warning indicator light (LED) goes off and service code is not displayed.

★But the service codes stored in memory of the ECU are not erased to preserve the problem history. In this model, the problem history can not be erased.

Self-Diagnosis

Service Code Table

Service Code	Problems
11	Main throttle sensor malfunction, wiring open or short
12	Intake air pressure sensor malfunction, wiring open or short
13	Intake air temperature sensor malfunction, wiring open or short
14	Water temperature sensor malfunction, wiring open or short
21	Crankshaft sensor malfunction, wiring open or short
24	Speed sensor malfunction, wiring open or short
31	Vehicle-down sensor malfunction, wiring open or short
32	Subthrottle sensor malfunction, wiring open or short
33	Oxygen sensor inactivation, wiring open or short (Equipped models)
39	ECU communication error
51	Stick (Ignition) coil #1 malfunction, wiring open or short
52	Stick (Ignition) coil #2 malfunction, wiring open or short
56	Radiator fan relay malfunction, wiring open or short
62	Subthrottle valve actuator malfunction, wiring open or short
64	Air switching valve malfunction, wiring open or short
67	Oxygen sensor heater malfunction, wiring open or short (Equipped models)
94	Oxygen sensor malfunction, wiring open or short (Equipped models)
3A	Purge valve malfunction, wiring open or short (CAL, SEA-B1 and TH models)

Notes:

○The ECU may be involved in these problems. If all the parts and circuits checked out good, be sure to check the ECU for ground and power supply. If the ground and power supply are checked good, replace the ECU.

○When no service code is displayed, the electrical parts of the DFI system has no fault, and the mechanical parts of the DFI system and the engine are suspect.

Self-Diagnosis

Backups

○The ECU takes the following measures to prevent engine damage when the DFI or the ignition system parts have troubles.

Service Codes	Parts	Output Signal Usable Range or Criteria	Backups by ECU
11	Main Throttle Sensor	Main Throttle Sensor Output Voltage 0.2 ~ 4.8 V	If the main throttle sensor system fails (the output voltage is out of the usable range, wiring short or open), the ECU locks ignition timing into the ignition timing at closed throttle position and sets the DFI in the D-J method (1). Also, the main throttle sensor system and intake air pressure fails, the ECU locks ignition timing into the ignition timing at closed throttle position and sets the DFI in the α-N method (2).
12	Intake Air Pressure Sensor	Intake Air Pressure (absolute) Pv = 150 ~ 800 mmHg	If the intake air pressure sensor system fails (the signal is out of the usable range, wiring short or open), the ECU sets the DFI in the α - N method.
13	Intake Air Temperature Sensor	Intake Air Temperature Ta = –30°C ~ +120°C	If the intake air temperature sensor fails (the signal is out of the usable range, wiring short or open), the ECU sets Ta at 40°C.
14	Water Temperature Sensor	Water Temperature Tw = –30°C ~ +120°C	If the water temperature sensor system fails (the signal is out of the usable range, wiring short or open), the ECU sets Tw at 80°C.
21	Crankshaft Sensor	Crankshaft sensor must send 22 signals to the ECU at the one cranking.	If the crankshaft sensor generates other than 22 signals, the engine stops by itself.
24	Speed Sensor	Speed sensor must send 4 signals to the ECU at the one rotation of the engine sprocket. The gear position is decided by the signal of the speed sensor.	If the speed sensor system fails (no signal, wiring short or open), the speedometer shows 0, and the ECU sets the top (6) gear position.
31	Vehicle-down Sensor	Output Voltage (signal) Vd = 0.65 ~ 4.45 V	If the vehicle-down sensor system has failures (the output voltage Vd is more than usable range, wiring open), the ECU shuts off the fuel pump, the fuel injectors and the ignition system.
32	Subthrottle Sensor	Output Voltage 0.15 ~ 4.85 V	If the subthrottle sensor system fails (the signal is out of the usable range, wiring short or open), the ECU drive the subthrottle valve to the full closed position, and it stops the current to the actuator.
33	Oxygen Sensor (Equipped Models)	The oxygen sensor is active and sensor must send signals (output voltage) continuously to the ECU.	If the oxygen sensor is not activated, the ECU stops oxygen sensor feedback mode.

Self-Diagnosis

Service Codes	Parts	Output Signal Usable Range or Criteria	Backups by ECU
39	ECU	The ECU sends the data (for service code) to the meter unit.	—
51	Stick Coil #1*	The ECU must send signals continuously to the stick coil primary winding.	If the stick coil #1 primary winding has failures (no signal, wiring short or open), the ECU shuts off the injector #1 to stop fuel to the cylinder #1, though the engine keeps running.
52	Stick Coil #2*	The ECU must send signals continuously to the stick coil primary winding.	If the stick coil #2 primary winding has failures (no signal, wiring short or open), the ECU shuts off the injector #2 to stop fuel to the cylinder #2, though the engine keeps running.
62	Subthrottle Valve Actuator	The actuator operates open and close of the subthrottle valve by the pulse signal from the ECU.	If the subthrottle valve actuator fails (the signal is out of the usable range, wiring short or open), the ECU stops the current to the actuator.
67	Oxygen Sensor (Equipped Models)	The oxygen sensor heater raise temperature of the sensor for its earlier activation. 12V-6.6W, 0.55A	If the oxygen sensor heater fails (wiring short or open), the ECU stops the current to the heater.
94	Oxygen Sensor (Equipped Models)	The oxygen sensor must send signals (output voltage) continuously to the ECU	If the oxygen sensor output voltage is incorrect, the ECU stops oxygen sensor feed back mode.
3A	Purge Valve (CAL, SEA-B1 and TH Models)	The purge valve controls the flow of the secondary air by opening and shutting the solenoid valve.	–

Note:

(1): D-J Method: When the engine load is light like at idling or low speed, the ECU determines the injection quantity by calculating from the throttle vacuum (intake air pressure sensor output voltage) and engine speed (crankshaft sensor output voltage). This method is called D-J method (low-speed mode).

(2): α - N Method: As the engine speed increases, and the engine load turns middle to heavy, the ECU determines the injection quantity by calculating from the throttle opening (throttle sensor output voltage) and the engine speed. This method is called α - N method (high-speed mode).

(*): This depends on the number of stopped cylinders.

Main Throttle Sensor (Service Code 11)

Main Throttle Sensor Removal/Adjustment

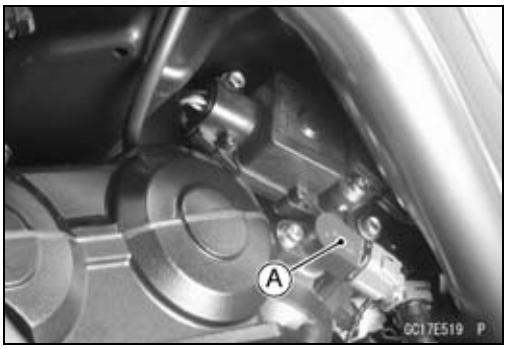

NOTICE

Do not remove or adjust the main throttle sensor [A] since it has been adjusted and set with precision at the factory.
Never drop the throttle body assy, especially on a hard surface. Such a shock to the sensor can damage it.

Main Throttle Sensor Input Voltage Inspection

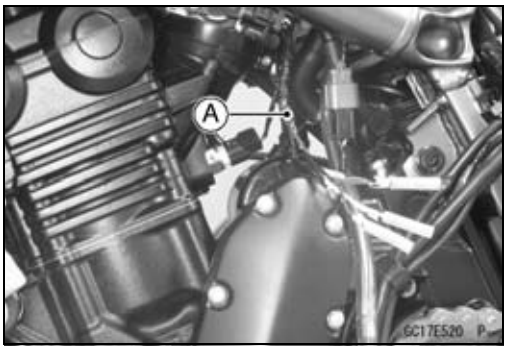

NOTE

○*Be sure the battery is fully charged.*

- Turn the ignition switch to OFF.
- Remove the left middle fairing (see Middle Fairing Removal in the Frame chapter).
- Disconnect the main throttle sensor connector and connect the harness adapter [A] between these connectors.

Special Tool - Throttle Sensor Setting Adapter: 57001-1538

- Connect a digital meter to the harness adapter leads.

Main Throttle Sensor Input Voltage
Connections to Adapter:
Digital Meter (+) → BK (sensor BL) lead
Digital Meter (–) → W (sensor BR/BK) lead

- Measure the input voltage with the engine stopped and with the connector joined.
- Turn the ignition switch to ON.

Input Voltage
Standard: DC 4.75 ~ 5.25 V

- Turn the ignition switch to OFF.

★If the input voltage is normal, check the output voltage.

★If the input voltage is less than the standard, remove the ECU and check the wiring between these connectors.
○Disconnect the ECU and sensor connectors.

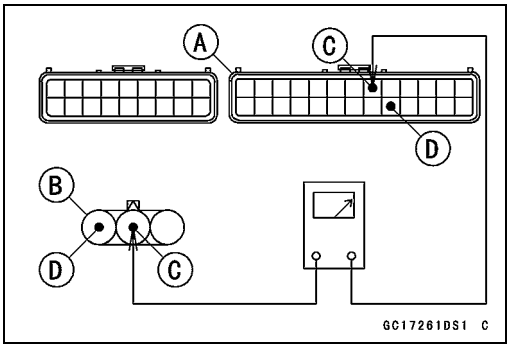

Wiring Continuity Inspection
ECU Connector [A] ←→
Main Throttle Sensor Connector [B]
BL lead (ECU terminal 8) [C]
BR/BK lead (ECU terminal 22) [D]

★If the wiring is good, check the ECU for its ground and power supply (see ECU Power Supply Inspection).
★If the ground and power supply are good, replace the ECU (see ECU Removal/Installation).

- Install the left middle fairing (see Middle Fairing Installation in the Frame chapter).

Main Throttle Sensor (Service Code 11)

Main Throttle Sensor Output Voltage Inspection

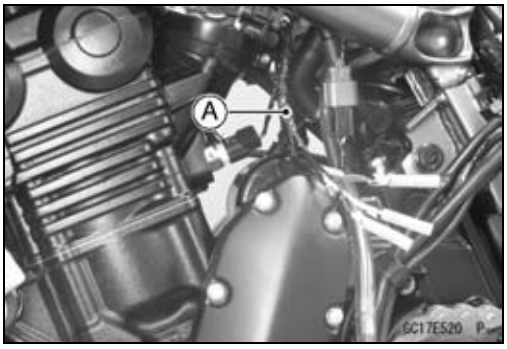

- Measure the output voltage at the main throttle sensor in the same way as input voltage inspection, noting the following.

○Disconnect the main throttle sensor connector and connect the harness adapter [A] between these connectors.

Special Tool - Throttle Sensor Setting Adapter: 57001 -1538

Main Throttle Sensor Output Voltage
Connections to Adapter:
Digital Meter (+) → R (sensor Y/R) lead
Digital Meter (–) → W (sensor BR/BK) lead

- Start the engine and warm it up thoroughly.
- Check the idle speed to ensure the throttle opening is correct.

Idle Speed
Standard: 1 300 ±50 r/min (rpm)

★If the idle speed is out of the specified range, adjust it (see Idle Speed Inspection in the Periodic Maintenance chapter).

- Turn the ignition switch to OFF.
- Measure the output voltage with the engine stopped, and with the connector joined.
- Turn the ignition switch to ON.

Output Voltage
Standard: DC 1.005 ~ 1.035 V at idle throttle opening
DC 4.2 ~ 4.4 V at full throttle opening (for reference)

NOTE

○*Open the throttle, confirm the output voltage will be raise.*
○*The standard voltage refers to the value when the voltage reading at the Input Voltage Inspection shows 5 V exactly.*
○*When the input voltage reading shows other than 5 V, derive a voltage range as follows.*
Example:
In the case of a input voltage of 4.75 V.
1.005 × 4.75 ÷ 5.00 = 0.955 V
1.035 × 4.75 ÷ 5.00 = 0.983 V
Thus, the valid range is 0.955 ~ 0.983 V

- Turn the ignition switch to OFF.

★If the output voltage is out of the standard, inspect the main throttle sensor resistance (see Main Throttle Sensor Resistance Inspection).

Main Throttle Sensor (Service Code 11)

★If the output voltage is normal, check the wiring for continuity.

○Disconnect the ECU and sensor connectors.

Wiring Continuity Inspection

ECU Connector [A] ←→

Main Throttle Sensor Connector [B]

Y/R lead (ECU terminal 6) [C]

BR/BK lead (ECU terminal 22) [D]

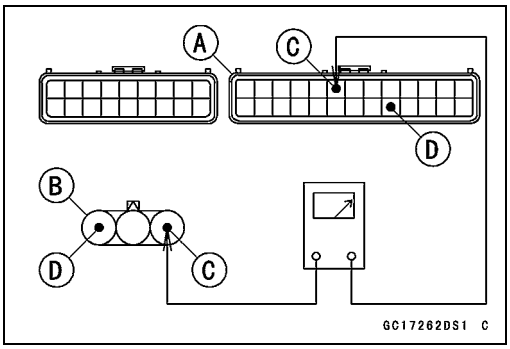

★If the wiring is good, check the ECU for its ground and power supply (see ECU Power Supply Inspection).

★If the ground and power supply are good, replace the ECU (see ECU Removal/Installation).

Main Throttle Sensor Resistance Inspection

- Turn the ignition switch to OFF.
- Disconnect the main throttle sensor connector.
- Connect a digital meter [A] to the main throttle sensor connector [B].
- Measure the main throttle sensor resistance.

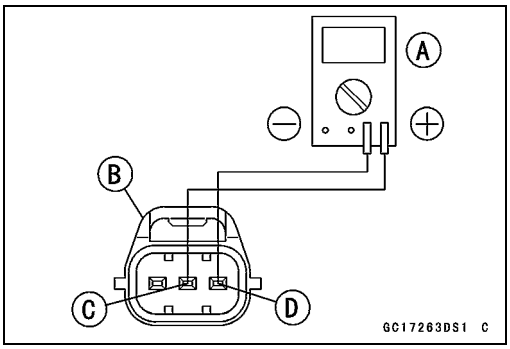

Main Throttle Sensor Resistance

Connections: **BL lead [C] ←→ BR/BK lead [D]**

Standard: **4 ~ 6 kΩ**

★If the reading is out of the range, replace the throttle body assy.

★If the reading is within the range, but the problem still exists, replace the ECU (see ECU Removal/Installation).

Main Throttle Sensor Circuit

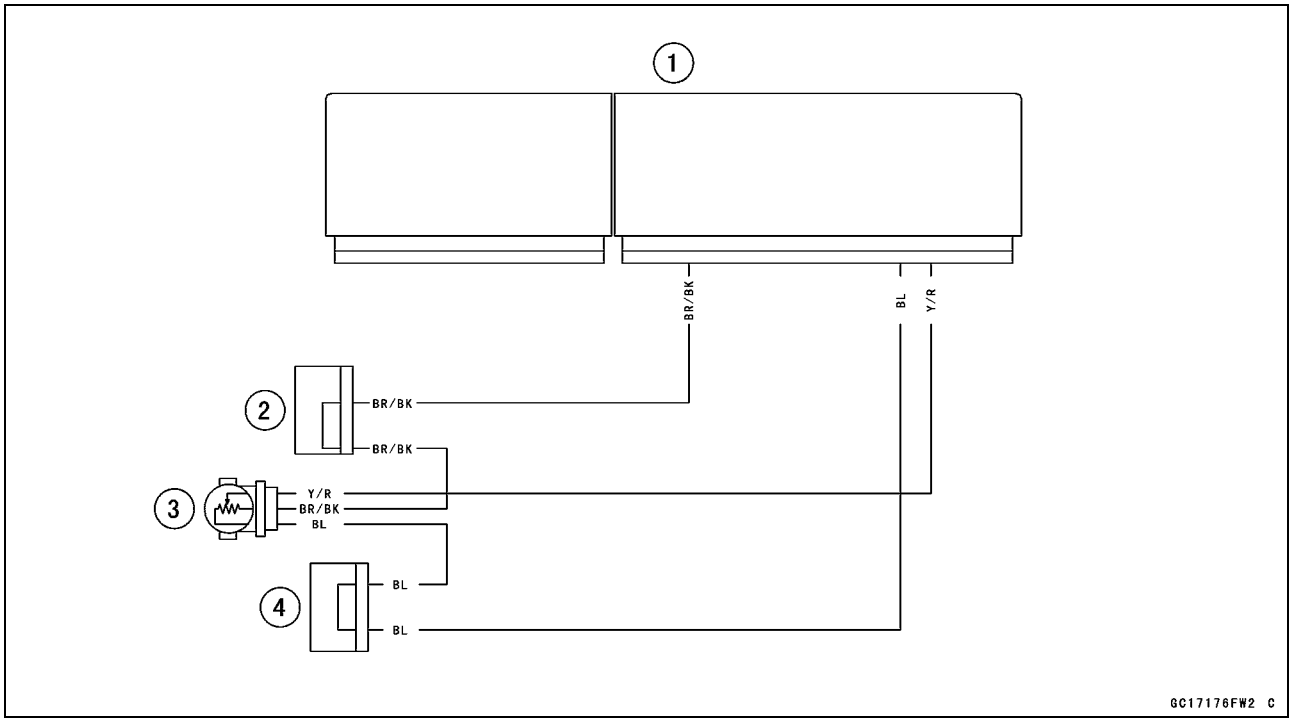

1. ECU
2. Joint Connector D
3. Main Throttle Sensor
4. Joint Connector C

Intake Air Pressure Sensor (Service Code 12)

Intake Air Pressure Sensor Removal

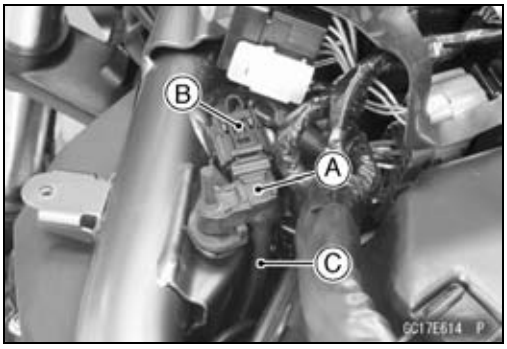

NOTICE

Never drop the sensor, especially on a hard surface. Such a shock to the part can damage it.

- Remove the fuel tank (see Fuel Tank Removal).
- Pull the intake air pressure sensor [A] rearward to remove it from the bracket.
- Disconnect the connector [B] and the vacuum hose [C].

Intake Air Pressure Sensor Installation

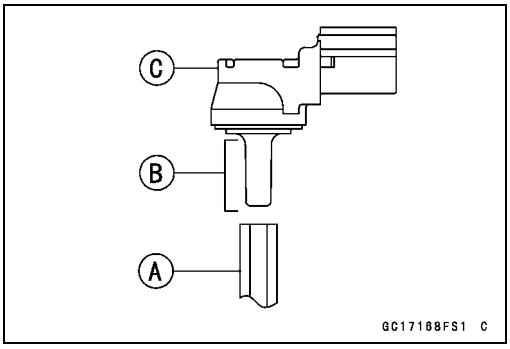

- Installation is the reverse of removal.

○Before installing the vacuum hose [A], apply soap and water solution to the nozzle [B] of the intake air pressure sensor [C].

○Run the lead and hose correctly (see Cable, Wire, and Hose Routing section in the Appendix chapter).

Intake Air Pressure Sensor Input Voltage Inspection

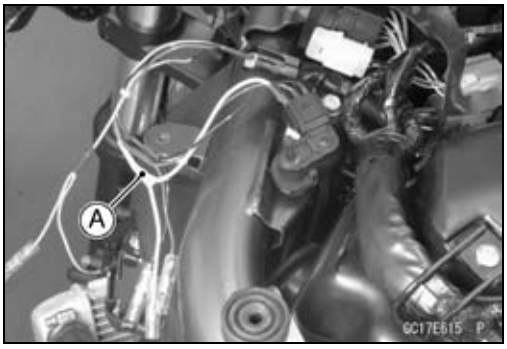

NOTE

○*Be sure the battery is fully charged.*

- Turn the ignition switch to OFF.
- Remove the fuel tank (see Fuel Tank Removal).
- Disconnect the intake air pressure sensor connector and connect the harness adapter [A] between these connectors.

Special Tool - Measuring Adapter: 57001-1700

- Connect a digital meter to the harness adapter leads.

Intake Air Pressure Sensor Input Voltage
Connections to Adapter:

Digital Meter (+) → R (sensor BL) lead

Digital Meter (–) → BK (sensor BR/BK) lead

- Measure the input voltage with the engine stopped and with the connector joined.
- Turn the ignition switch to ON.

Input Voltage
Standard: DC 4.75 ~ 5.25 V

- Turn the ignition switch to OFF.

★If the reading is within the standard, check the output voltage (see Intake Air Pressure Sensor Output Voltage Inspection).

Intake Air Pressure Sensor (Service Code 12)

★If the reading is out of the standard, remove the ECU and check the wiring for continuity between main harness connectors.

Special Tool - Hand Tester: 57001-1394

○Disconnect the ECU and sensor connectors.

Wiring Continuity Inspection
ECU Connector [A] ←→
Intake Air Pressure Sensor Connector [B]
BL lead (ECU terminal 8) [C]
BR/BK lead (ECU terminal 22) [D]

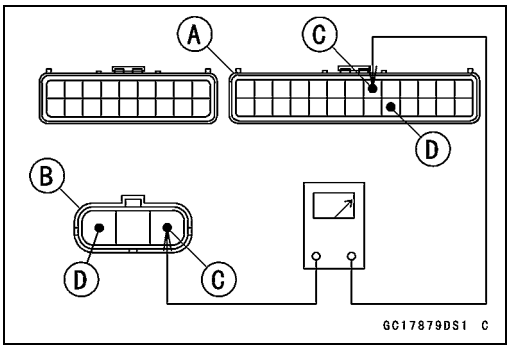

★If the wiring is good, check the ECU for its ground and power supply (see ECU Power Supply Inspection).
★If the ground and power supply are good, replace the ECU (see ECU Removal/Installation).

Intake Air Pressure Sensor Output Voltage Inspection

● Measure the output voltage at the intake air pressure sensor in the same way as input voltage inspection, note the following.
○Disconnect the intake air pressure sensor connector and connect the harness adapter [A] between these connectors.

Special Tool - Measuring Adapter: 57001-1700

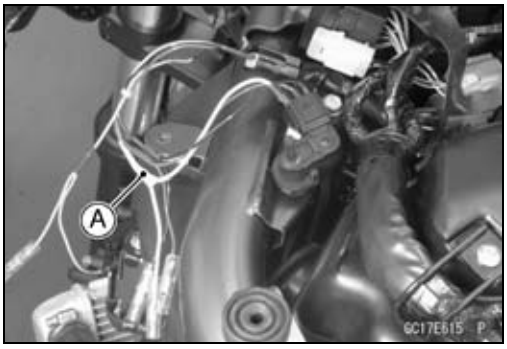

Intake Air Pressure Sensor Output Voltage
Connections to Adapter:
Digital Meter (+) → W (sensor Y/BL) lead
Digital Meter (–) → BK (sensor BR/BK) lead

● Measure the output voltage with the engine stopped and with the connector joined.
● Turn the ignition switch to ON.

Output Voltage
Usable Range: **DC 3.80 ~ 4.20 V at standard atmospheric pressure (101.32 kPa, 76 cmHg)**

NOTE

○*The output voltage changes according to local atmospheric pressure.*

● Turn the ignition switch to OFF.
★If the reading is out of the usable range, replace the sensor.

Intake Air Pressure Sensor (Service Code 12)

★If the reading is within the usable range, remove the ECU and check the wiring for continuity between main harness connector.

Special Tool - Hand Tester: 57001-1394

○Disconnect the ECU and sensor connectors.

Wiring Continuity Inspection
ECU Connector [A] ←→
Intake Air Pressure Sensor Connector [B]
Y/BL lead (ECU terminal 7) [C]
BR/BK lead (ECU terminal 22) [D]

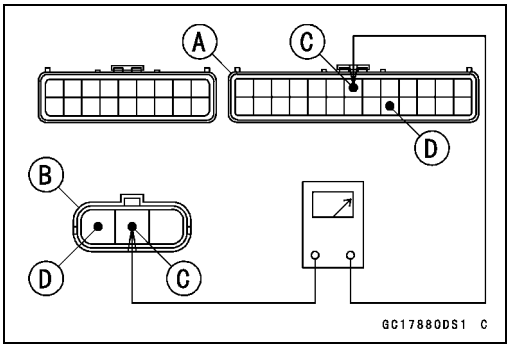

★If the wiring is good, check the sensor for various vacuum.

- Remove the intake air pressure sensor [A] and disconnect the vacuum hose from the sensor.
- Connect an auxiliary hose [B] to the intake air pressure sensor.
- Temporarily install the intake air pressure sensor.

○Connect a digital meter [C], vacuum gauge [D], the fork oil level gauge [E] and the harness adapter to the intake air pressure sensor.

Special Tools - Fork Oil Level Gauge: 57001-1290
Vacuum Gauge: 57001-1369
Measuring Adapter: 57001-1700

Intake Air Pressure Sensor Output Voltage Connections to Adapter:
Digital Meter (+) → W (sensor Y/BL) lead
Digital Meter (–) → BK (sensor BR/BK) lead

○Turn the ignition switch to ON.

○Measure the intake air pressure sensor output voltage from various vacuum readings, while pulling the handle of the fork oil level gauge.

○Check the intake air pressure sensor output voltage, using the following formula and chart.

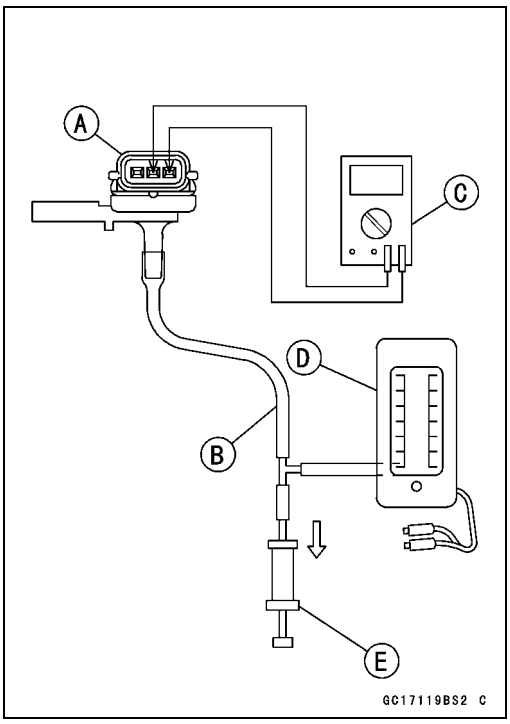

Intake Air Pressure Sensor (Service Code 12)

Suppose:
Pg: Vacuum Pressure (Gauge) to Sensor
Pl: Local Atmospheric Pressure (Absolute) measured by a barometer
Pv: Vacuum Pressure (Absolute) to Sensor
Vv: Sensor Output Voltage (V)

then
Pv = Pl – Pg

For example, suppose the following data is obtained:
Pg = 8 cmHg (Vacuum Gauge Reading)
Pl = 70 cmHg (Varometer Reading)
Vv = 3.2 V (Digital Meter Reading)

then
Pv = 70 – 8 = 62 cmHg (Absolute)

Plot this Pv (62 cmHg) at a point [1] on the chart and draw a vertical line through the point. Then, you can get the usable range [2] of the sensor output voltage.
Usable range = 3.04 ~ 3.49 V

Plot Vv (3.2 V) on the vertical line. → Point [3].
Results: In the chart, Vv is within the usable range and the sensor is normal.
Pv = 24 ~ 55 cmHg

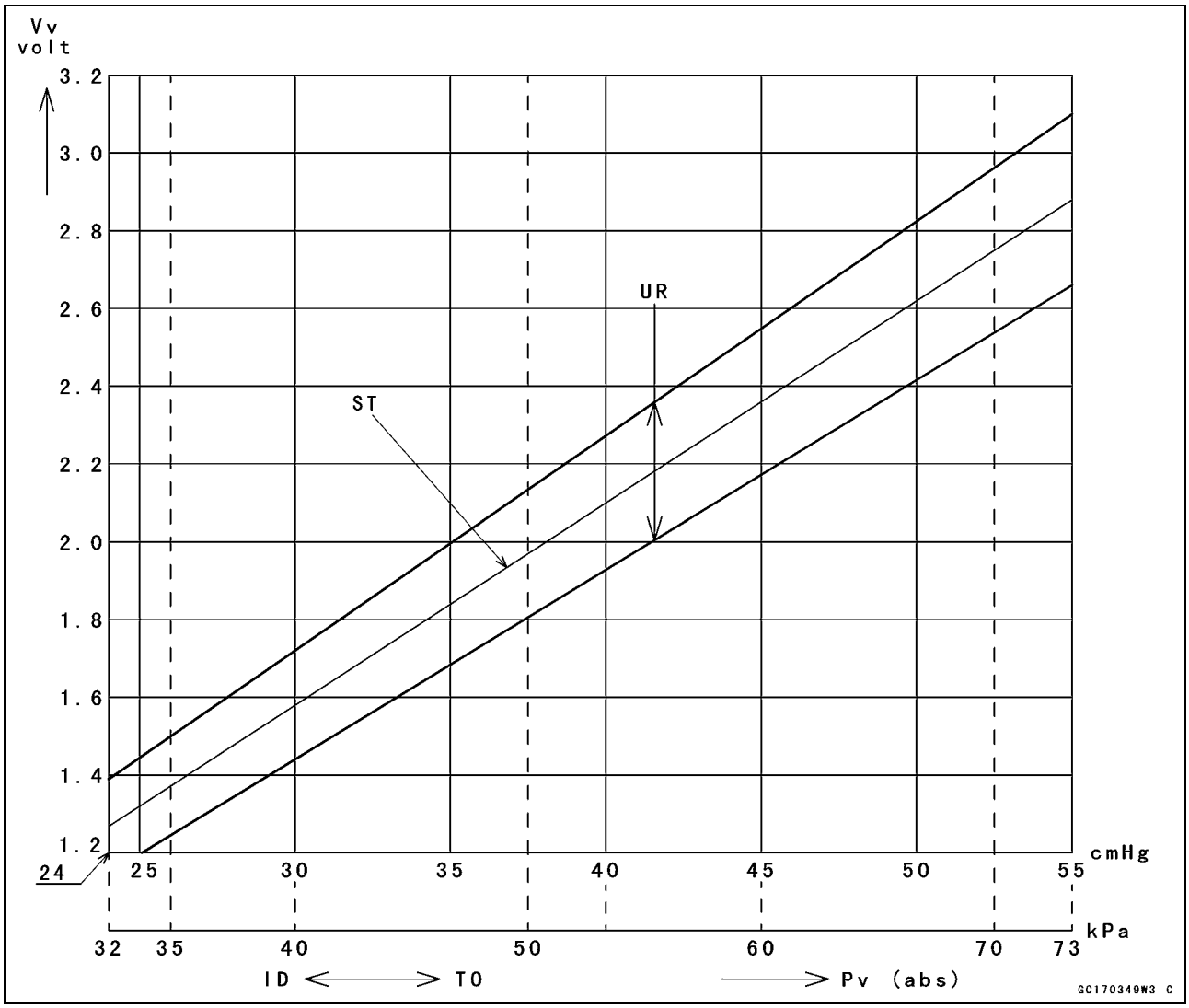

Intake Air Pressure Sensor (Service Code 12)

Pv = 55 ~ 86 cmHg

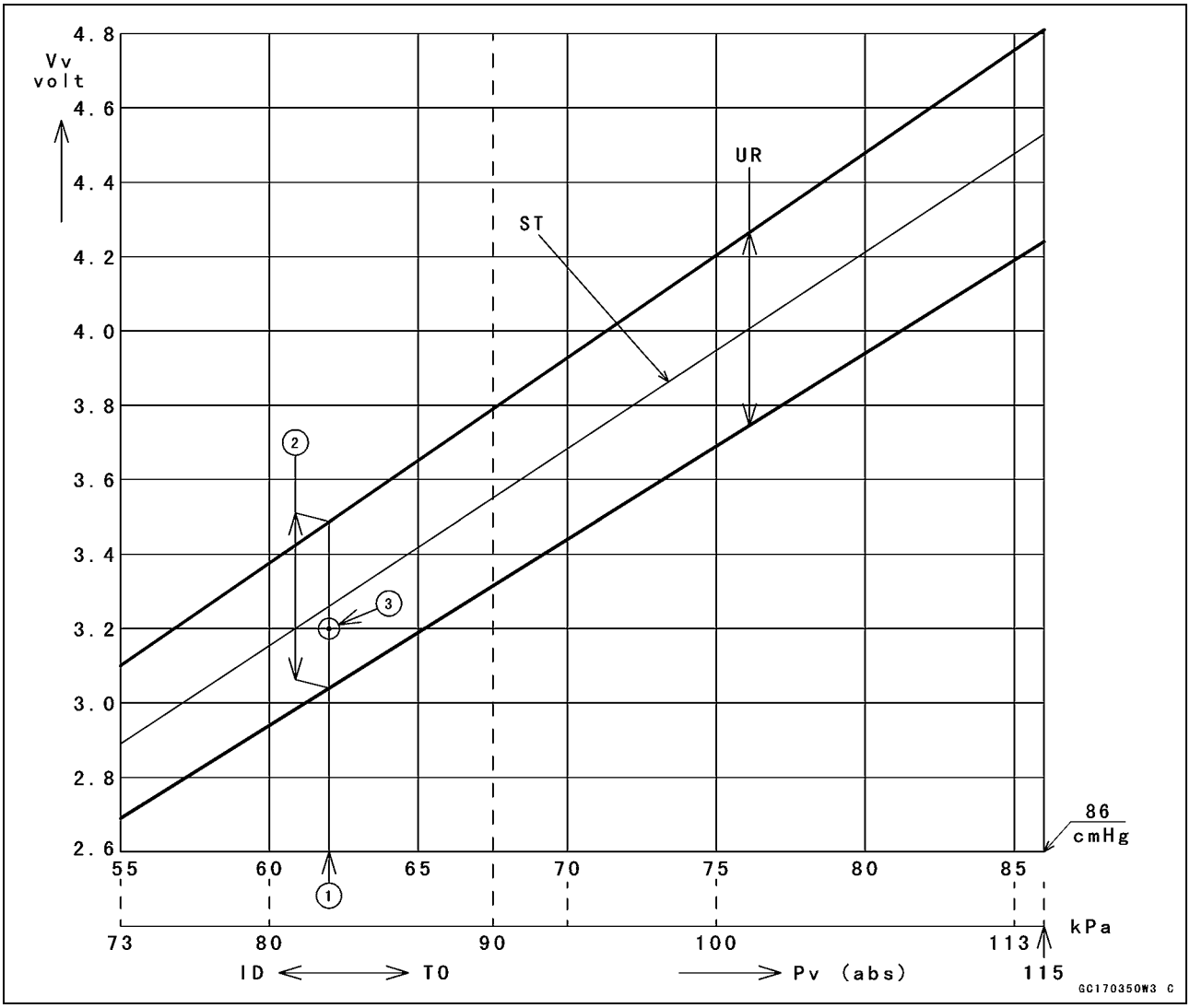

ID: Idling
Ps: Standard Atmospheric Pressure (Absolute)
Pv: Throttle Vacuum Pressure (Absolute)
ST: Standard of Sensor Output Voltage (V)
TO: Throttle Full Open
UR: Usable Range of Sensor Output Voltage (V)
Vv: Intake Air Pressure Sensor Output Voltage (V) (Digital Meter Reading)

Intake Air Pressure Sensor (Service Code 12)

Intake Air Pressure Sensor Circuit

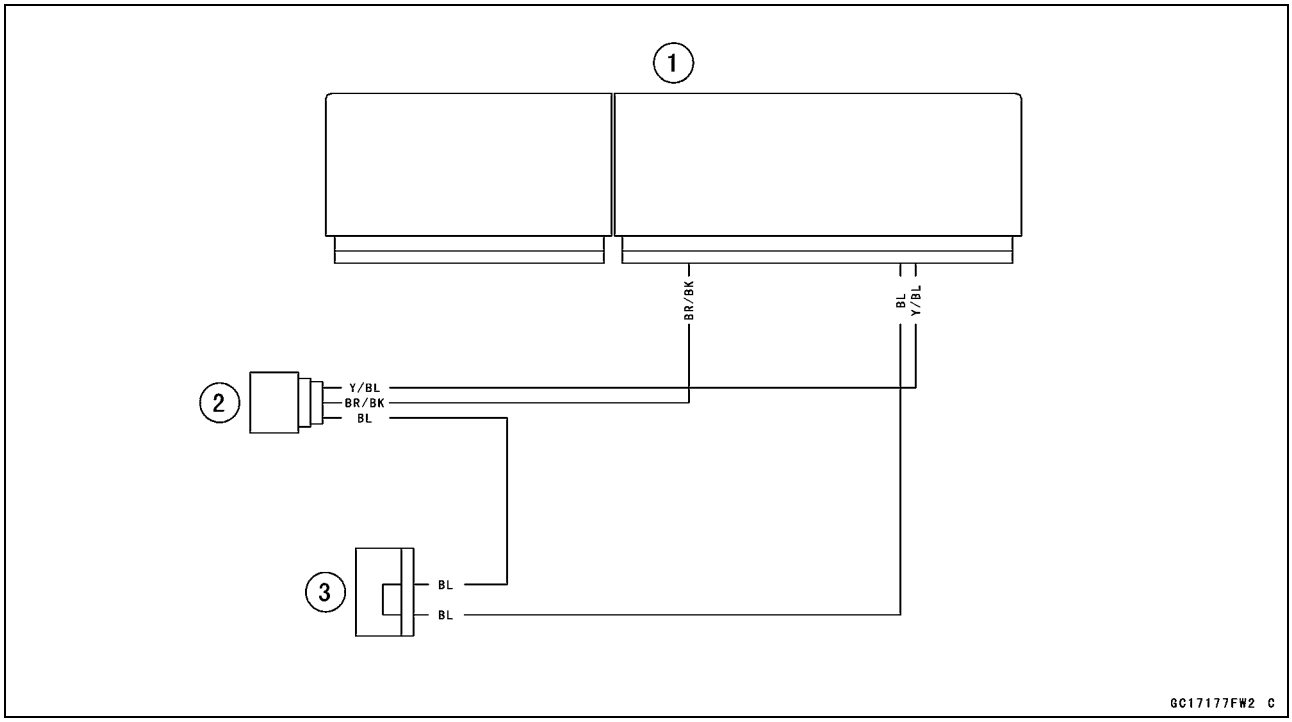

1. ECU
2. Intake Air Pressure Sensor
3. Joint Connector C

Intake Air Temperature Sensor (Service Code 13)

Intake Air Temperature Sensor Removal/Installation

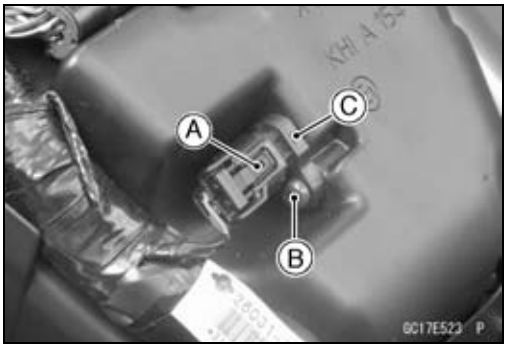

NOTICE

Never drop the sensor, especially on a hard surface. Such a shock to the sensor can damage it.

- Remove the fuel tank (see Fuel Tank Removal).
- Disconnect the connector [A].
- Remove the screw [B].
- Pull out the intake air temperature sensor [C].
- Installation is the reverse of removal.

○Tighten:

Torque - Intake Air Temperature Sensor Screw: 1.2 N·m (0.12 kgf·m, 11 in·lb)

Intake Air Temperature Sensor Output Voltage Inspection

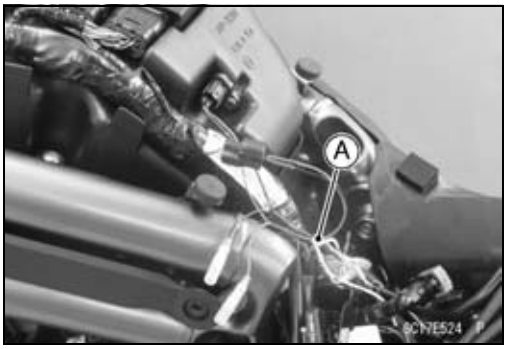

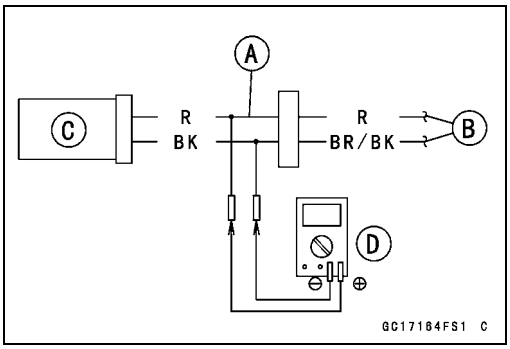

NOTE

○*Be sure the battery is fully charged.*

- Turn the ignition switch to OFF.
- Remove the fuel tank (see Fuel Tank Removal).
- Disconnect the intake air temperature sensor connector and connect the harness adapter [A] between these connectors as shown in the figure.
  Main Harness [B]
  Intake Air Temperature Sensor [C]

Special Tool - Measuring Adapter: 57001-1700

- Connect a digital meter [D] to the harness adapter leads.

Intake Air Temperature Sensor Output Voltage Connections to Adapter:

Digital Meter (+) → R (sensor R) lead

Digital Meter (–) → BK (sensor BR/BK) lead

- Measure the output voltage with the engine stopped and the connector joined.
- Turn the ignition switch to ON.

Output Voltage

Standard: About DC 2.25 ~ 2.50 V at intake air temperature 20°C (68°F)

NOTE

○*The output voltage changes according to the intake air temperature.*

- Turn the ignition switch to OFF.

★If the reading is within the standard, check the ECU for its ground and power supply (see ECU Power Supply Inspection).

★If the ground and power supply are good, replace the ECU (see ECU Removal/Installation).

Intake Air Temperature Sensor (Service Code 13)

★If the reading is out of the standard, remove the ECU and check the wiring for continuity between main harness side connectors.

Special Tool - Hand Tester: 57001-1394

○Disconnect the ECU and sensor connectors.

Wiring Continuity Inspection
ECU Connector [A] ←→
Intake Air Temperature Sensor Connector [B]
R lead (ECU terminal 20) [C]
BR/BK lead (ECU terminal 22) [D]

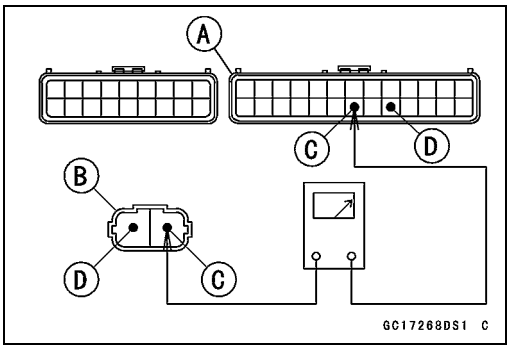

★If the wiring is good, check the intake air temperature sensor resistance (see Intake Air Temperature Sensor Resistance Inspection).

Intake Air Temperature Sensor Resistance Inspection

- Remove the intake air temperature sensor (see Intake Air Temperature Sensor Removal/Installation).
- Suspend the sensor [A] in a container of machine oil so that the heat-sensitive portion is submerged.
- Suspend a thermometer [B] with the heat-sensitive portion [C] located in almost the same depth with the sensor.

NOTE

○*The sensor and thermometer must not touch the container side or bottom.*

- Place the container over a source of heat and gradually raise the temperature of the oil while stirring the oil gently for even temperature.
- Using a digital meter, measure the internal resistance of the sensor across the terminals at the temperatures shown in the following.

Intake Air Temperature Sensor Resistance
Standard: 5.4 ~ 6.6 kΩ at 0°C (32°F)
0.29 ~ 0.39 kΩ at 80°C (176°F)

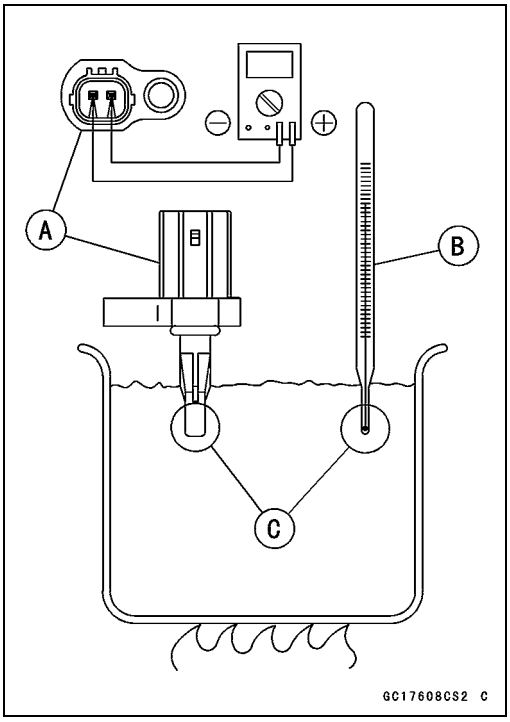

★If the reading is out of the standard, replace the sensor.
★If the reading is within the standard, but the problem still exists, replace the ECU (see ECU Removal/Installation).

Intake Air Temperature Sensor (Service Code 13)

Intake Air Temperature Sensor Circuit

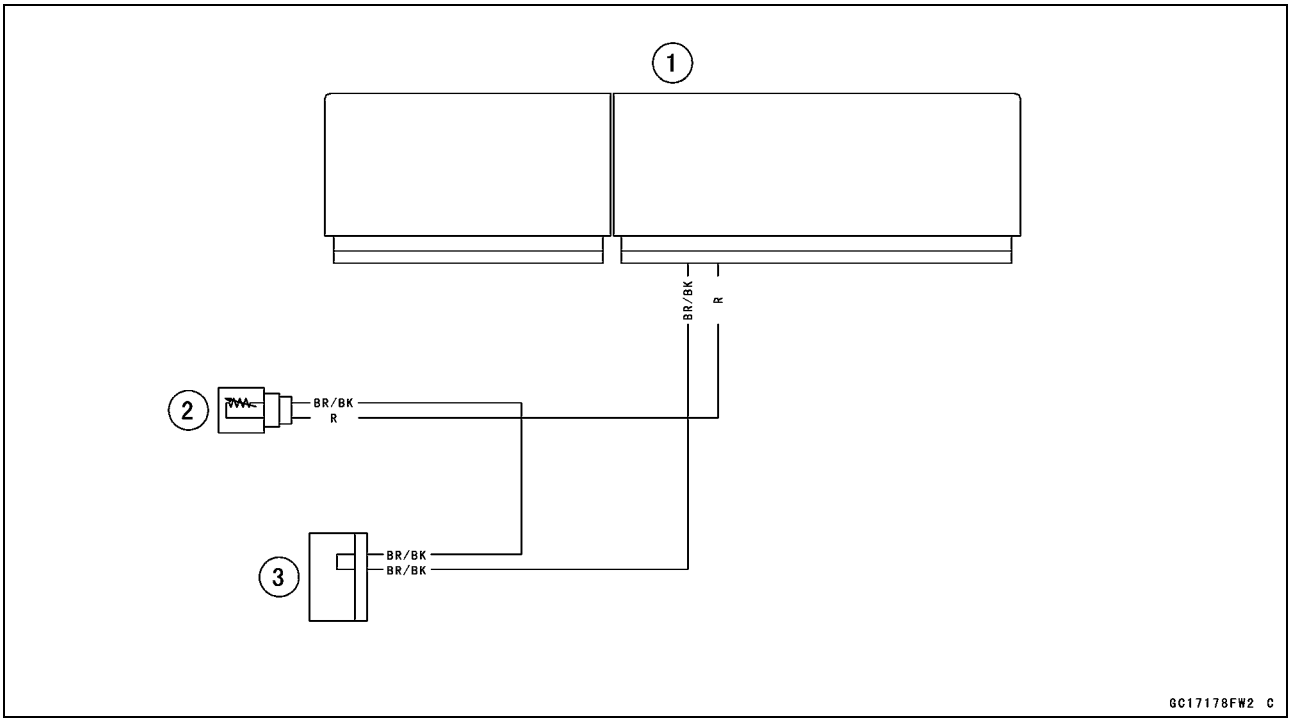

1. ECU
2. Intake Air Temperature Sensor
3. Joint Connector D

Water Temperature Sensor (Service Code 14)

Water Temperature Sensor Removal/Installation

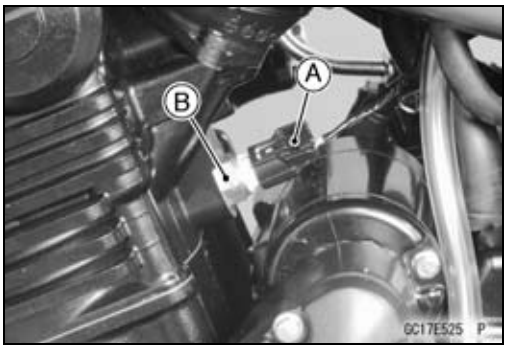

NOTICE

Never drop the sensor, especially on a hard surface. Such a shock to the sensor can damage it.

- Drain the coolant (see Coolant Change in the Periodic Maintenance chapter).
- Remove the left middle fairing (see Middle Fairing Removal in the Frame chapter).
- Disconnect the sensor connector [A], and unscrew the water temperature sensor [B].
- Installation is the reverse of removal.

○Apply grease to the new O-ring on the water temperature sensor.

○Tighten:

Torque - Water Temperature Sensor: 12 N·m (1.2 kgf·m, 106 in·lb)

○Fill the engine with coolant and bleed the air from the cooling system (see Coolant Change in the Periodic Maintenance chapter).

Water Temperature Sensor (Service Code 14)

Water Temperature Sensor Output Voltage Inspection

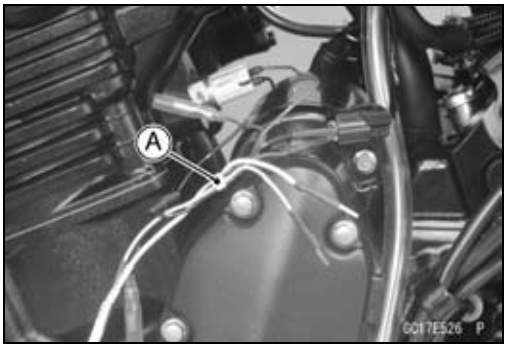

NOTE

○*Be sure the battery is fully charged.*

- Turn the ignition switch to OFF.
- Remove the left middle fairing (see Middle Fairing Removal in the Frame chapter).
- Disconnect the water temperature sensor connector and connect the harness adapter [A] between these connectors as shown in the figure.
  Main Harness [B]
  Water Temperature Sensor [C]

Special Tool - Measuring Adapter: 57001-1700

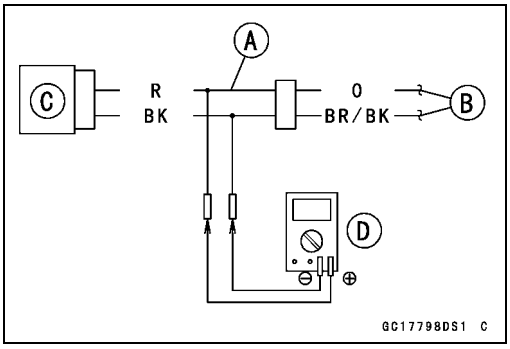

- Connect a digital meter [D] to the harness adapter leads.

Water Temperature Sensor Output Voltage
Connections to Adapter:
Digital Meter (+) → R (sensor O) lead
Digital Meter (–) → BK (sensor BR/BK) lead

- Measure the output voltage with the engine stopped and with the connector joined.
- Turn the ignition switch to ON.

Output Voltage
Standard: About DC 2.80 ~ 2.97 V at 20°C (68°F)

NOTE

○*The output voltage changes according to the coolant temperature in the engine.*

- Turn the ignition switch to OFF.

★If the reading is within the standard, check the ECU for its ground and power supply (see ECU Power Supply Inspection).

★If the ground and power supply are good, replace the ECU (see ECU Removal/Installation).

★If the reading is out of the standard, remove the ECU and check the wiring for continuity between main harness connectors.

Special Tool - Hand Tester: 57001-1394

○Disconnect the ECU and sensor connectors.

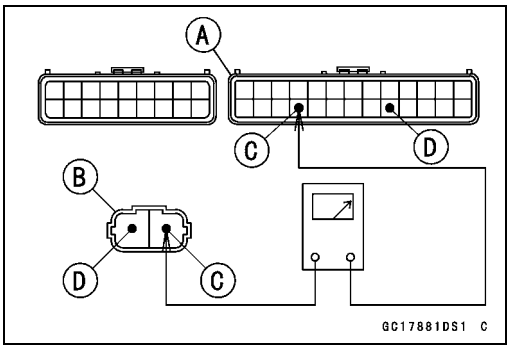

Wiring Continuity Inspection
ECU Connector [A] ←→
Water Temperature Sensor Connector [B]
O lead (ECU terminal 17) [C]
BR/BK lead (ECU terminal 22) [D]

★If the wiring is good, check the water temperature sensor resistance (see Water Temperature Sensor Resistance Inspection).

- Install the left middle fairing (see Middle Fairing Installation in the Frame chapter).

Water Temperature Sensor (Service Code 14)

Water Temperature Sensor Resistance Inspection

- Refer to the Water Temperature Sensor Inspection in the Electrical System chapter.

★If the reading is within the standard, but the problem still exists, replace the ECU (see ECU Removal/Installation).

Water Temperature Sensor Circuit

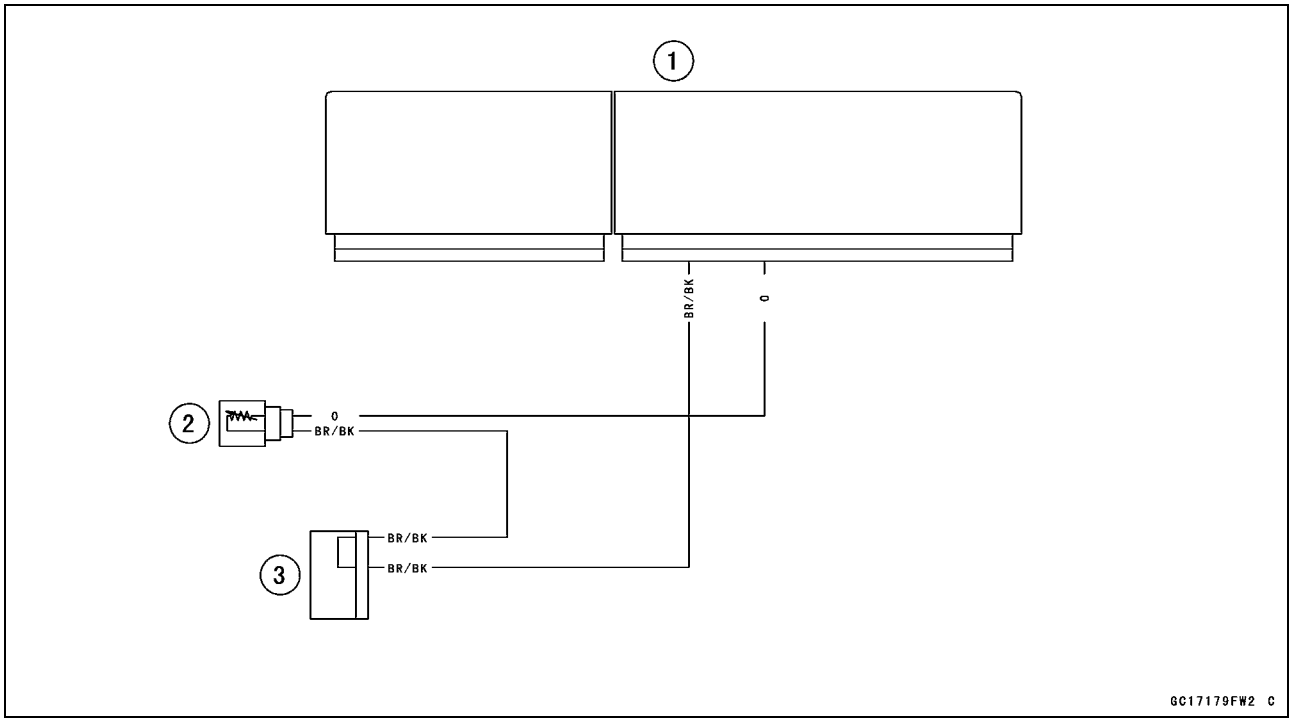

1. ECU
2. Water Temperature Sensor
3. Joint Connector D

Crankshaft Sensor (Service Code 21)

The crankshaft sensor has no power source, and when the engine stops, the crankshaft sensor generates no signals.

Crankshaft Sensor Removal/Installation

- Refer to the Crankshaft Sensor Removal/Installation in the Electrical System chapter.

Crankshaft Sensor Resistance Inspection

- Refer to the Crankshaft Sensor Inspection in the Electrical System chapter.

★If the reading is within the standard, check the peak voltage (see Crankshaft Sensor Peak Voltage Inspection).

Crankshaft Sensor Peak Voltage Inspection

- Refer to the Crankshaft Sensor Peak Voltage Inspection in the Electrical System chapter.

★If the reading is within the standard, remove the ECU and check the wiring for continuity between main harness connectors.

Special Tool - Hand Tester: 57001-1394

○Disconnect the ECU and sensor connectors.

Wiring Continuity Inspection
ECU Connector [A] ←→
Crankshaft Sensor Connector [B]
R/BK lead (ECU terminal 11) [C]
Y/BK lead (ECU terminal 24) [D]

★If the wiring is good, check the ECU for its ground and power supply (see ECU Power Supply Inspection).

★If the ground and power supply are good, replace the ECU (see ECU Removal/Installation).

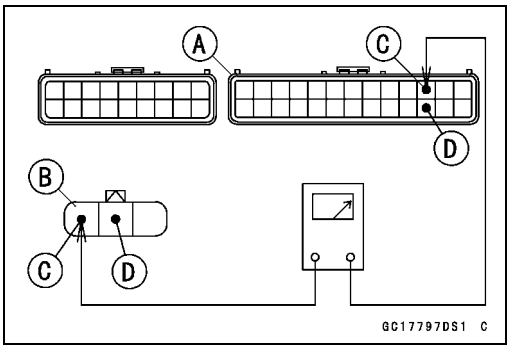

Crankshaft Sensor Circuit

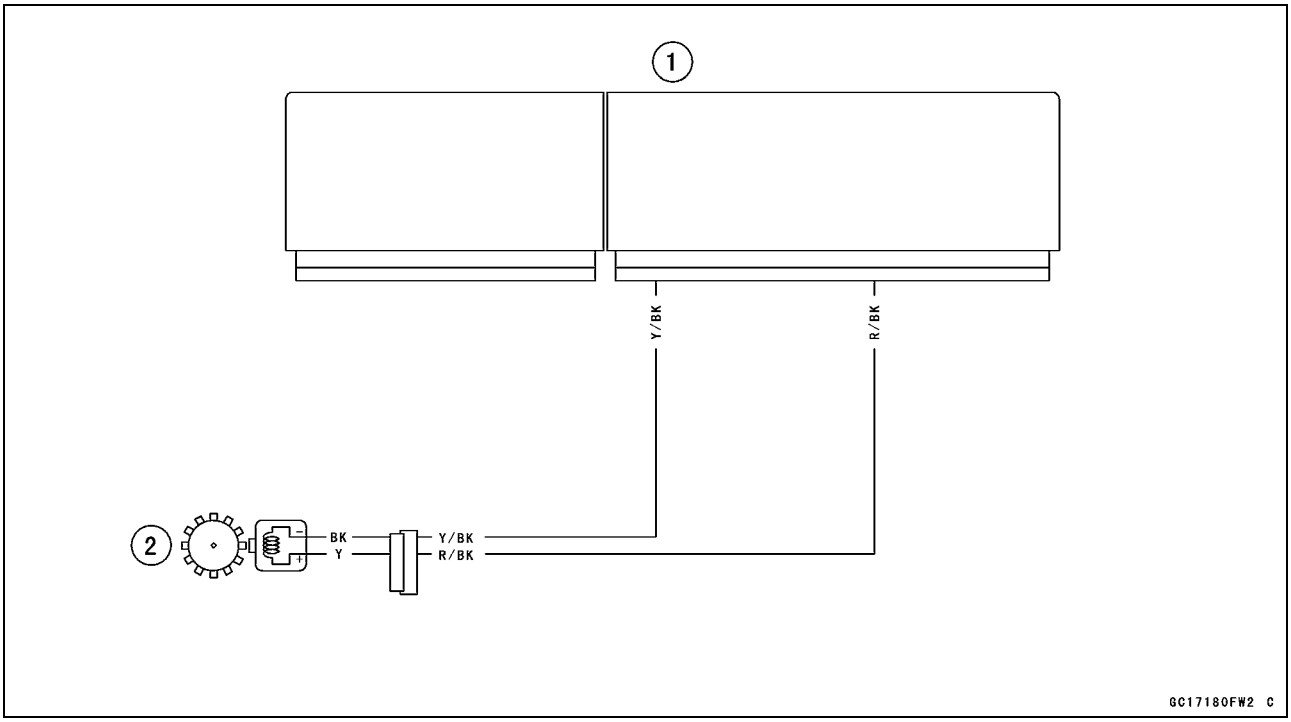

1. ECU
2. Crankshaft Sensor

Speed Sensor (Service Code 24)

Speed Sensor Removal/Installation

- Refer to the Speed Sensor Removal/Installation in the Electrical System chapter.

Speed Sensor Inspection

- Refer to the Speed Sensor Inspection in the Electrical System chapter.

Speed Sensor Input Voltage Inspection

NOTE

○*Be sure the battery is fully charged.*

- Turn the ignition switch to OFF.
- Remove the left frame cover (see Frame Cover Removal in the Frame chapter).
- Disconnect the speed sensor connector [A] and connect the harness adapter [B] between the harness connector and speed sensor connector.

Special Tool - Throttle Sensor Setting Adapter #1: 57001 -1400

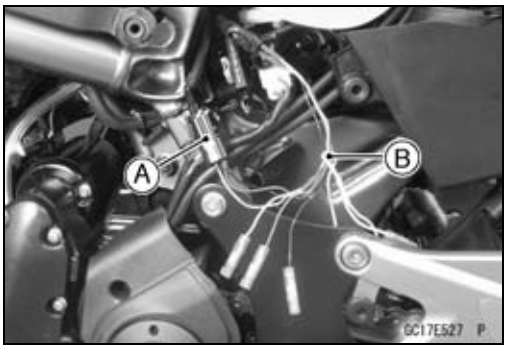

- Connect a digital meter to the harness adapter leads.

Speed Sensor Input Voltage
Connections to Adapter:
Digital Meter (+) → BL (sensor P) lead [C]
Digital Meter (−) → BK/BL (sensor BK) lead [D]

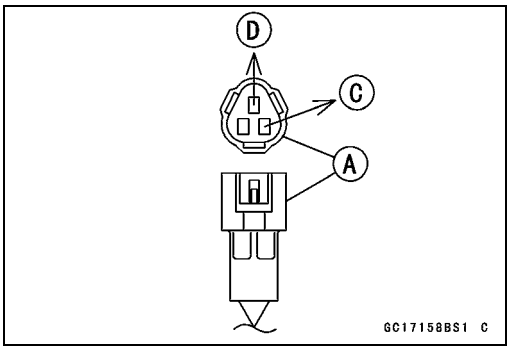

- Measure the input voltage with the engine stopped, and with the connector joined.
- Turn the ignition switch to ON.

Input Voltage
Standard: About DC 9 ~ 11 V at Ignition Switch ON

- Turn the ignition switch to OFF.

★If the reading is out of the range, check the wiring (see wiring diagram in this section), and meter unit (see Meter Unit Inspection in the Electrical System chapter).

★If the reading is good, check the output voltage.

Speed Sensor (Service Code 24)

Speed Sensor Output Voltage Inspection

- Before this inspection, inspect the input voltage (see Speed Sensor Input Voltage Inspection).

NOTE

○*Be sure the battery is fully charged.*

- Turn the ignition switch to OFF.
- Remove the left frame cover (see Frame Cover Removal in the Frame chapter).
- Disconnect the speed sensor connector [A] and connect the harness adapter [B] between the harness connector and speed sensor connector.

Special Tool - Throttle Sensor Setting Adapter #1: 57001 -1400

- Connect a digital meter to the harness adapter leads.

Speed Sensor Output Voltage
Connections to Adapter:

Digital Meter (+) → Y/W (sensor Y) lead [C]

Digital Meter (–) → BK/BL (sensor BK) lead [D]

- Measure the output voltage with the engine stopped, and with the connector joined.
- Turn the ignition switch to ON.

Output Voltage

Standard: About DC 0.05 ~ 0.07 V or DC 4.5 ~ 4.9 V

NOTE

○*Rotate the rear wheel by hand, confirm the output voltage will be raise or lower.*

- Turn the ignition switch to OFF.

★If the reading is out of the range, check the speed sensor (see Speed Sensor Inspection in the Electrical System chapter) and the wiring to ECU (see wiring diagram in this section).

★If the reading, speed sensor and wiring are good, check the ECU for its ground, and power supply (see ECU Power Supply Inspection).

★If the ground and power supply are good, replace the ECU (see ECU Removal/Installation).

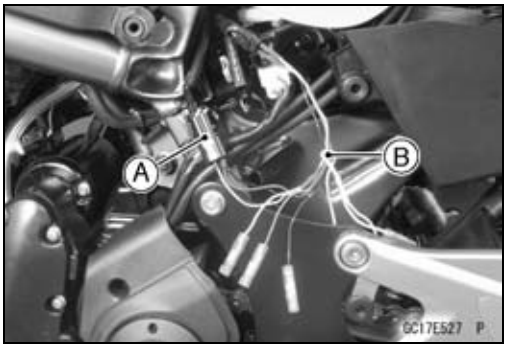

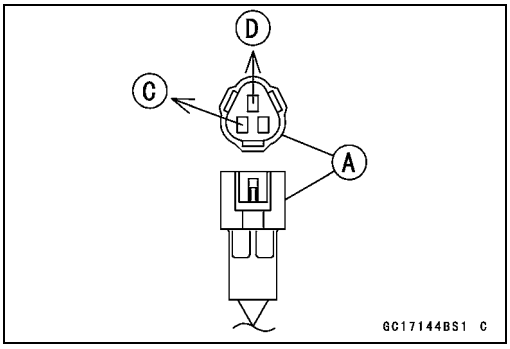

Speed Sensor (Service Code 24)

Speed Sensor Circuit

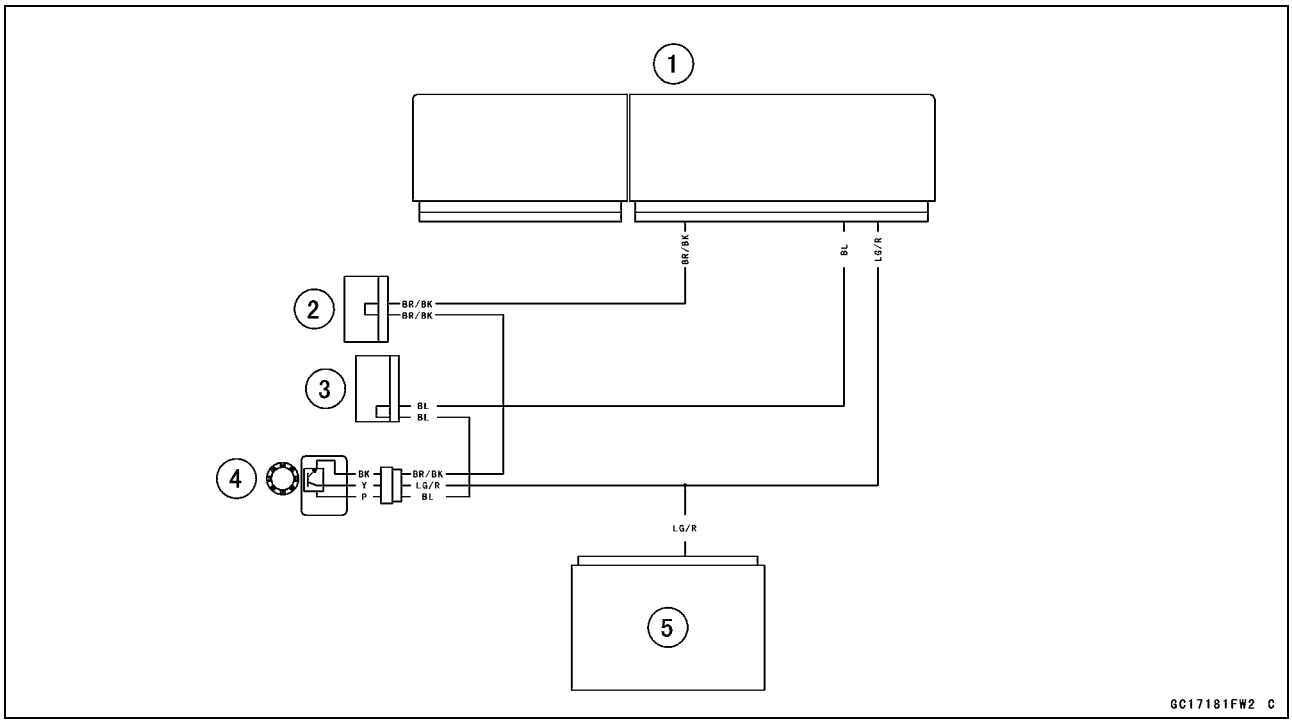

1. ECU
2. Joint Connector D
3. Joint Connector C
4. Speed Sensor
5. Meter Unit

Vehicle-down Sensor (Service Code 31)

Vehicle-down Sensor Removal/Installation

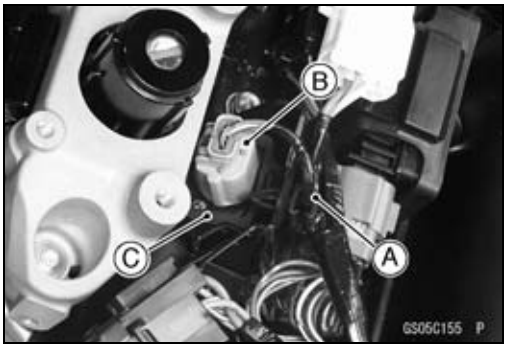

NOTICE

Never drop the vehicle-down sensor especially on a hard surface. Such a shock to the sensor can damage it.

- Remove:
  Fuel Tank (see Fuel Tank Removal)
  Fuel Tank Bracket (see Air Cleaner Element Replacement in the Periodic Maintenance chapter)
  Clamp [A]
  Connector [B] (Disconnect)
  Vehicle-down Sensor [C] and Damper
- Installation is the reverse of removal.

○Apply grease to the vehicle-down sensor terminals.
○The UP mark [A] of the sensor should face upward.

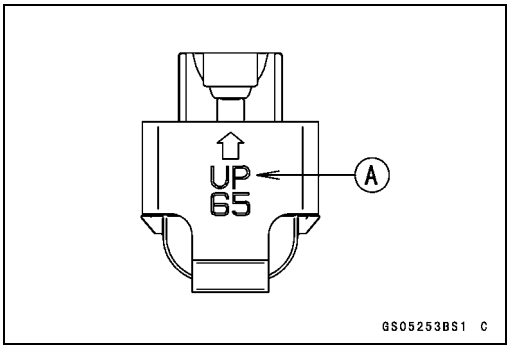

⚠ WARNING

Incorrect installation of the vehicle-down sensor could cause sudden loss of engine power. The rider could lose balance during certain riding situations for an accident resulting in injury or death. Ensure that the vehicle-down sensor is held in place by the sensor bracket.

Vehicle-down Sensor Inspection

NOTE

○*Be sure the battery is fully charged.*

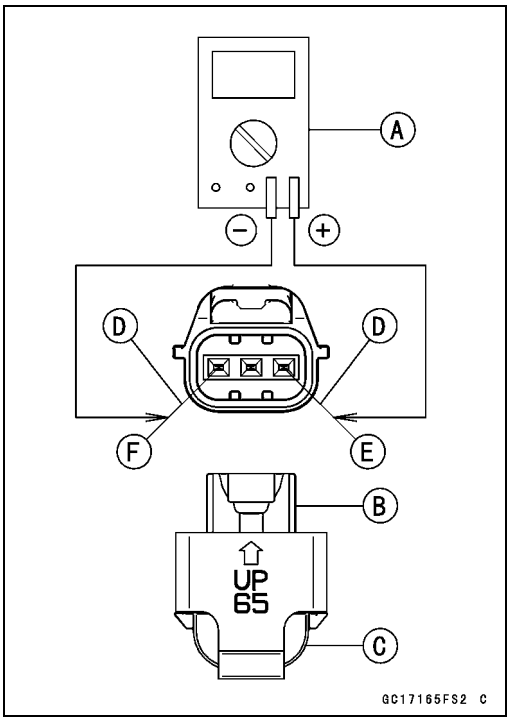

- Connect a digital meter [A] to the connector [B] of the vehicle-down sensor [C] with the needle adapter set [D].

  Special Tool - Needle Adapter Set: 57001-1457

  Vehicle-down Sensor Power Source Voltage
  Connections to Sensor Connector:
  Meter (+) → BL lead [E]
  Meter (–) → BR/BK lead [F]

- Turn the ignition switch to ON, and measure the power source voltage with the connector joined.

  Input Voltage
  Standard: DC 4.75 ~ 5.25 V

- Turn the ignition switch to OFF.

★If the reading of input voltage is less than the standard, check the ECU for its ground, power supply and wiring.
★If the power source is normal, check the output voltage.

Vehicle-down Sensor (Service Code 31)

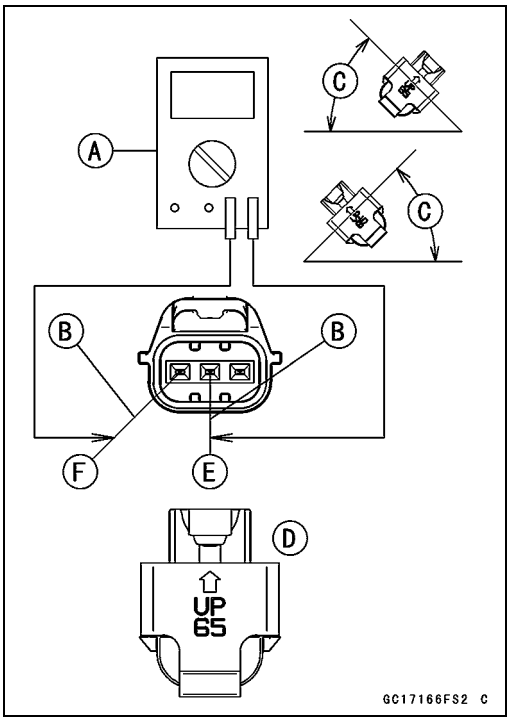

- Remove the vehicle-down sensor (see Vehicle-down Sensor Removal/Installation).

○Do not disconnect the sensor connector.

- Connect a digital meter [A] to the connector with needle adapter set [B].

Special Tool - Needle Adapter Set: 57001-1457

Vehicle-down Sensor Output Voltage
Connections to Sensor Connector:
Meter (+) → Y/G lead [E]
Meter (–) → BR/BK lead [F]

- Hold the sensor vertically.
- Turn the ignition switch to ON, and measure the output voltage with the connector joined.

○Tilt the sensor 60 ~ 70° or more [C] right or left, then hold the sensor almost vertical with the arrow mark pointed up [D], and measure the output voltage.

Output Voltage
Standard: with sensor tilted 60 ~ 70° or more right or left: 0.65 ~ 1.35 V
with sensor arrow mark pointed up: 3.55 ~ 4.45 V

NOTE

○*If you need to test again, turn the ignition switch to OFF, and then ON.*

- Turn the ignition switch to OFF.

★If the output voltage is normal, check the wiring.
★If the wiring is good, check the ECU for its ground and power supply (see ECU Power Supply Inspection).
★If the ground and power supply are good, replace the ECU (see ECU Removal/Installation).
★If the output voltage is out of the specified, replace the vehicle-down sensor.

Vehicle-down Sensor (Service Code 31)

Vehicle-down Sensor Circuit

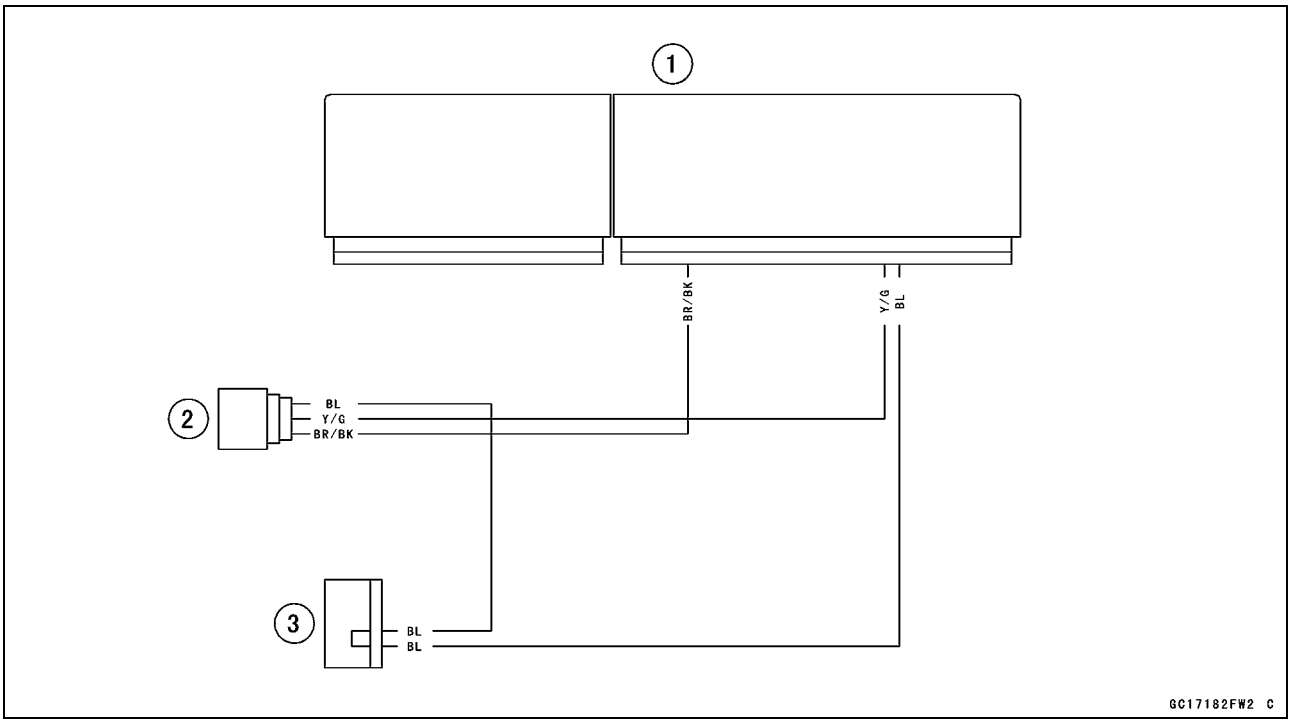

1. ECU
2. Vehicle-down Sensor
3. Joint Connector C

Subthrottle Sensor (Service Code 32)

Subthrottle Sensor Removal/Adjustment

NOTICE

Do not remove or adjust the subthrottle sensor since it has been adjusted and set with precision at the factory.
Never drop the throttle body assy, especially on a hard surface. Such a shock to the sensor can damage it.

Subthrottle Sensor Input Voltage Inspection

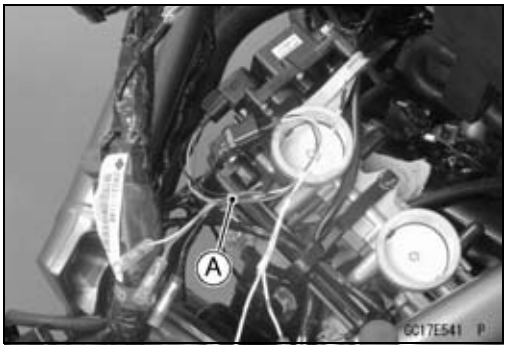

NOTE

○*Be sure the battery is fully charged.*

- Remove the air cleaner housing (see Air Cleaner Housing Removal).
- Turn the ignition switch to OFF.
- Loosen the throttle body assy holder clamp bolts and pull the throttle body assy out of the holder (see Throttle Body Assy Removal).
- Disconnect the subthrottle sensor connector and connect the throttle sensor setting adapter [A] between these connectors.

  Special Tool - Throttle Sensor Setting Adapter #1: 57001 -1400

- Install the throttle body assy (see Throttle Body Assy Installation).
- Connect a digital meter to the harness adapter leads.

  Subthrottle Sensor Input Voltage
  Connections to Adapter:
  Digital Meter (+) → BL (sensor BL) lead
  Digital Meter (–) → BK/BL (sensor BR/BK) lead

- Measure the input voltage with the engine stopped and with the connector joined.
- Turn the ignition switch to ON.

  Input Voltage
  Standard: DC 4.75 ~ 5.25 V

- Turn the ignition switch to OFF.

★If the reading is within the standard, check the output voltage (see Subthrottle Sensor Output Voltage Inspection).

Subthrottle Sensor (Service Code 32)

★If the reading is out of the standard, remove the ECU and check the wiring for continuity between main harness connectors.

Special Tool - Hand Tester: 57001-1394

○Disconnect the ECU and sensor connectors.

Wiring Continuity Inspection
ECU Connector [A] ←→
Subthrottle Sensor Connector [B]
BL lead (ECU terminal 8) [C]
BR/BK lead (ECU terminal 22) [D]

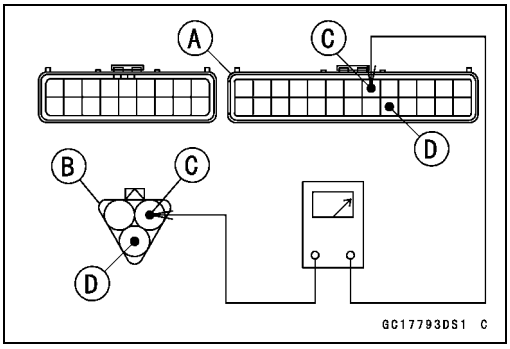

★If the wiring is good, check the ECU for its ground and power supply (see ECU Power Supply Inspection).
★If the ground and power supply are good, replace the ECU (see ECU Removal/Installation).

Subthrottle Sensor Output Voltage Inspection

- Remove the air cleaner housing (see Air Cleaner Housing Removal).
- Measure the output voltage at the subthrottle sensor in the same way as input voltage inspection. Note the following.

○Disconnect the subthrottle sensor connector and connect the throttle sensor setting adapter [A] between these connectors.

Special Tool - Throttle Sensor Setting Adapter #1: 57001-1400

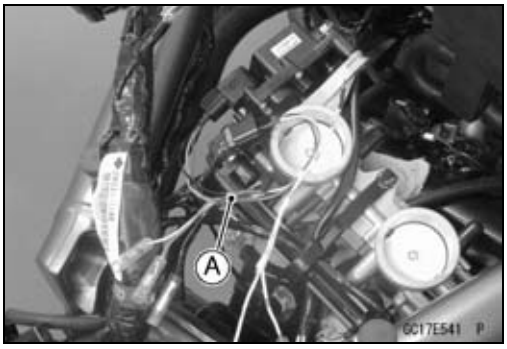

Subthrottle Sensor (Service Code 32)

Subthrottle Sensor Output Voltage
Connections to Adapter:
Digital Meter (+) → Y/W (sensor BR) lead
Digital Meter (–) → BK/BL (sensor BR/BK) lead

- Turn the ignition switch to ON.
- Measure the output voltage when the subthrottle valve is fully opened or completely closed by hand.

Output Voltage
Standard: DC 0.6 ~ 0.8 V (at idle throttle opening)
DC 4.08 ~ 4.12 V (at full throttle opening)

NOTE

○*Turn the lever counterclockwise, confirm the output voltage will be raise.*
○*The standard voltage refers to the value when the voltage reading at the Input Voltage Inspection shows 5 V exactly.*
○*When the input voltage reading shows other than 5 V, derive a voltage range as follows.*
Example:
In the case of a input voltage of 4.75 V.
0.6 × 4.75 ÷ 5.00 = 0.57 V
0.8 × 4.75 ÷ 5.00 = 0.76 V
Thus, the valid range is 0.57 ~ 0.76 V

- Turn the ignition switch to OFF.

★If the output voltage is out of the standard, inspect the subthrottle sensor resistance.

★If the reading is within the standard, remove the ECU and check the wiring for continuity between main harness connectors.

Special Tool - Hand Tester: 57001-1394

○Disconnect the ECU and sensor connectors.

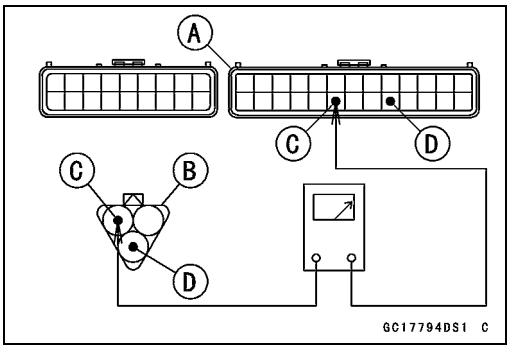

Wiring Continuity Inspection
ECU Connector [A] ←→
Subthrottle Sensor Connector [B]
BR lead (ECU terminal 19) [C]
BR/BK lead (ECU terminal 22) [D]

★If the wiring is good, check the ECU for its ground and power supply (see ECU Power Supply Inspection).
★If the ground and power supply are good, replace the ECU (see ECU Removal/Installation).

Subthrottle Sensor (Service Code 32)

Subthrottle Sensor Resistance Inspection

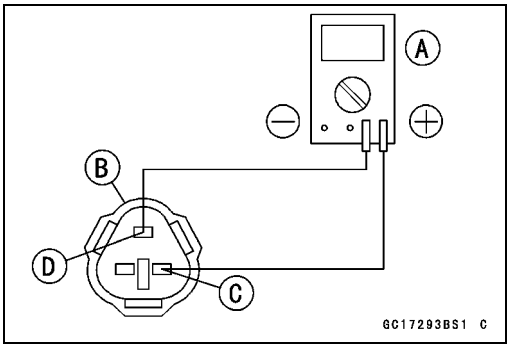

- Turn the ignition switch to OFF.
- Disconnect the subthrottle sensor connector.
- Connect a digital meter [A] to the subthrottle sensor connector [B].
- Measure the subthrottle sensor resistance.

Throttle Sensor Resistance

Connections: **BL lead [C] ←→ BR/BK lead [D]**

Standard: **4 ~ 6 kΩ**

★If the reading is out of the range, replace the throttle body assy (see Throttle Body Assy Removal/Installation).

★If the reading is within the range, but the problem still exists, replace the ECU (see ECU Removal/Installation).

Subthrottle Sensor Circuit

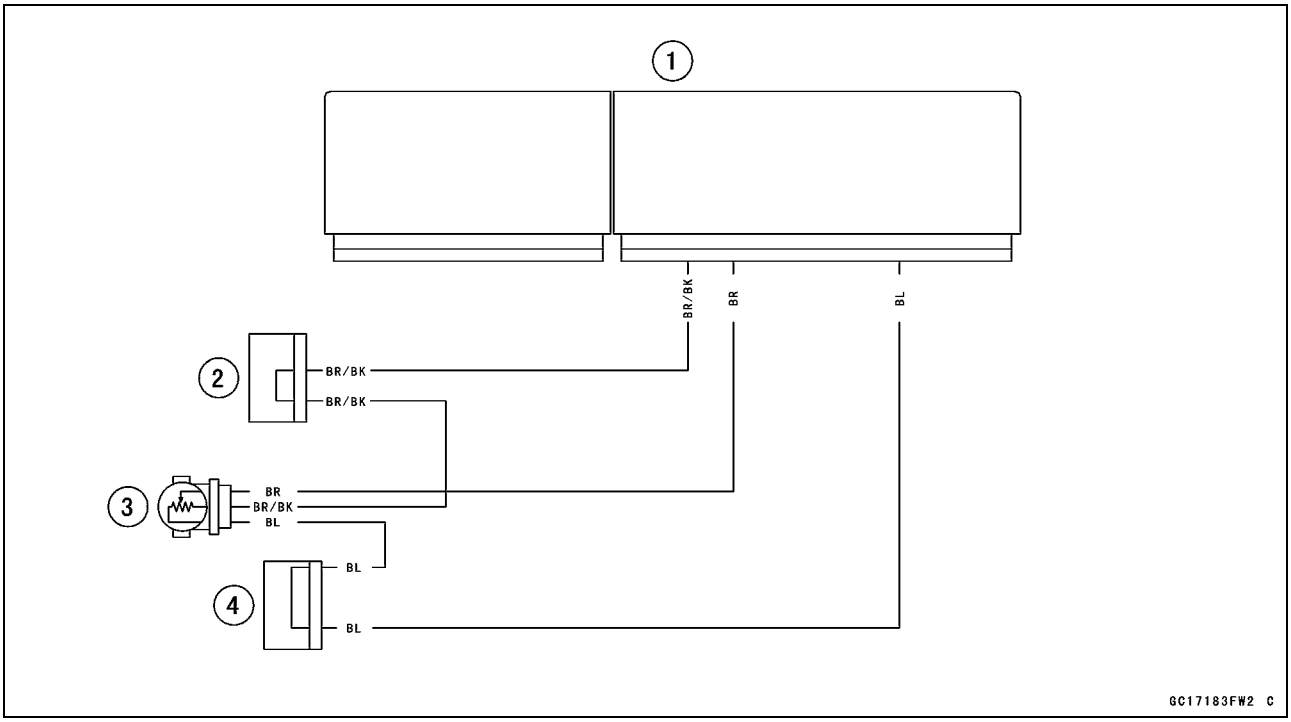

1. ECU
2. Joint Connector D
3. Subthrottle Sensor
4. Joint Connector C

Oxygen Sensor-not activated (Service Code 33) (Equipped Models)

Oxygen Sensor Removal/Installation

- Refer to the Oxygen Sensor Removal/Installation in the Electrical System chapter.

Oxygen Sensor Inspection

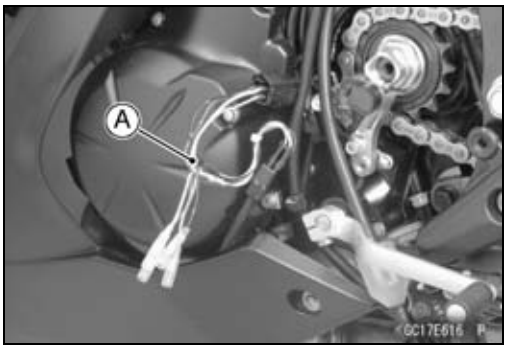

- Turn the ignition switch to OFF.
- Remove the engine sprocket cover (see Engine Sprocket Removal in the Final Drive chapter).
- Disconnect the oxygen sensor connector and connect the oxygen sensor measuring adapter [A] between these connectors.

  Special Tool - Oxygen Sensor Measuring Adapter: 57001 -1682

- Connect a digital meter to the harness adapter leads.

  Oxygen Sensor Output Voltage
  Connections to Adapter:
  Digital Meter (+) → BL (sensor BL) lead
  Digital Meter (−) → BR (sensor W) lead

- Remove the left middle fairing (see Middle Fairing Removal in the Frame chapter).
- Remove the air switching valve hose [A] from the fitting.
- Install the suitable plug on the fitting to shut off the secondary air.

- Turn the ignition switch to ON.
- Warm up the engine thoroughly until the radiator fan starts.
- Measure the output voltage with the connector joined.

  Output Voltage (with Plug)
  Standard: DC 0.7 V or more

- Next, remove the plug from the fitting [A] with idling.

⚠ WARNING

The engine gets extremely hot during normal operation and can cause serious burns. Never touch a hot engine.

- Measure the output voltage with the connector joined.

  Output Voltage (without Plug)
  Standard: DC 0.2 V or less

- Turn the ignition switch to OFF.

Oxygen Sensor-not activated (Service Code 33) (Equipped Models)

★If the reading is out of the standard (with plug: DC 0.7 V or more, without plug: DC 0.2 V or less), remove the ECU and check the wiring for continuity between main harness connectors.

Special Tool - Hand Tester: 57001-1394

○Disconnect the ECU and sensor connectors.

Wiring Continuity Inspection
ECU Connector [A] ←→
Oxygen Sensor Connector [B]
BL/Y lead (ECU terminal 4) [C]
BR/BK lead (ECU terminal 22) [D]

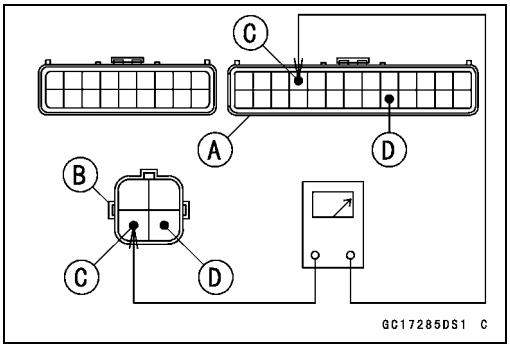

★If the wiring is good, replace the sensor.
★If the reading is within the standard (with plug: DC 0.7 V or more, without plugs: DC 0.2 V or less), check the ECU for its ground and power supply (see ECU Power Supply Inspection).
★If the ground and power supply are good, replace the ECU (see ECU Removal/Installation).

Oxygen Sensor-not activated (Service Code 33) (Equipped Models)

Oxygen Sensor Circuit

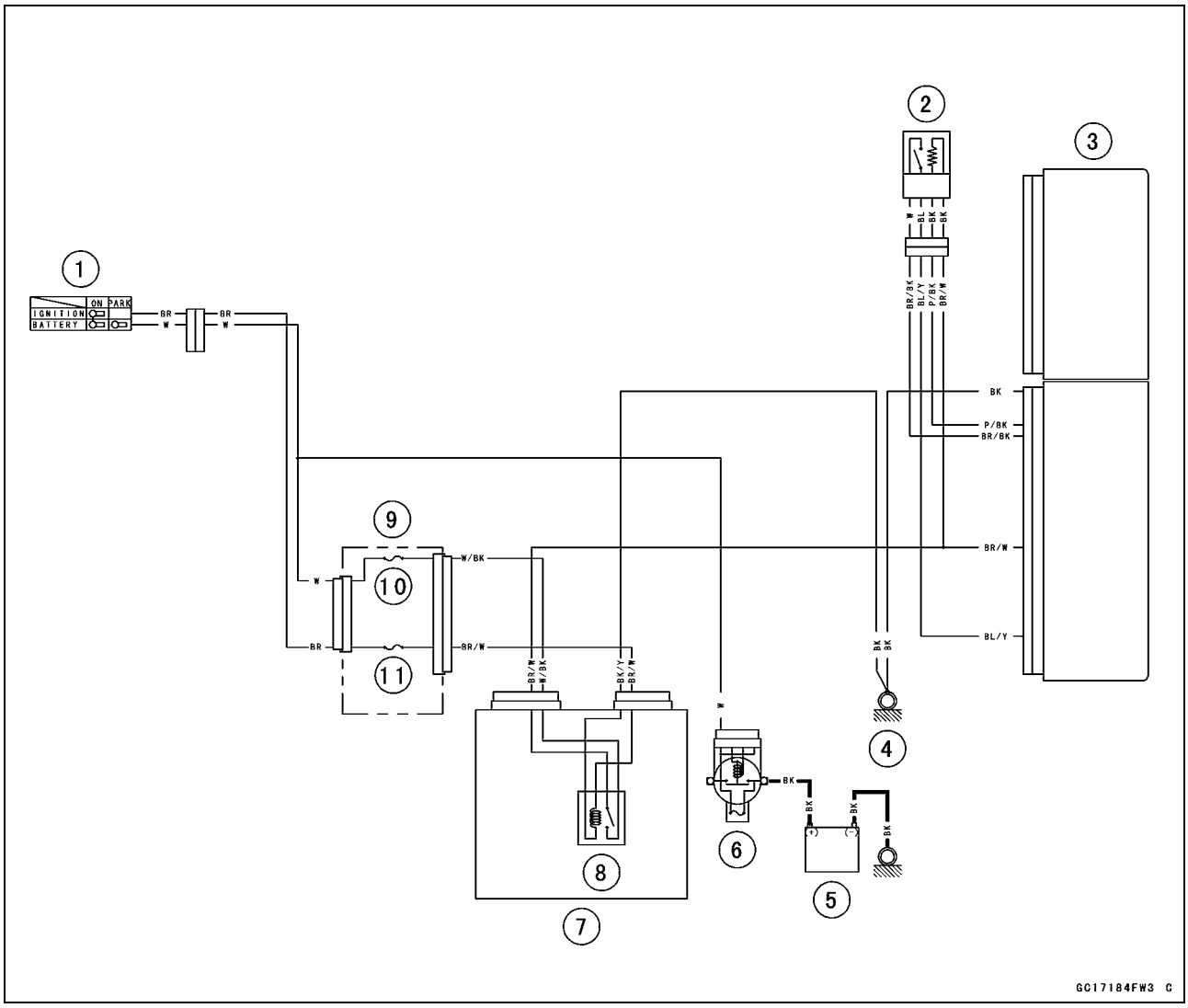

1. Ignition Switch
2. Oxygen Sensor
3. ECU
4. Frame Ground 2
5. Battery 12 V 10 Ah
6. Main Fuse 30 A
7. Relay Box
8. ECU Main Relay
9. Fuse Box 1
10. FI Fuse 15 A
11. Ignition Fuse 10 A

Stick Coils #1, #2: (Service Code 51, 52)

Stick Coil #1: Service Code 51
Stick Coil #2: Service Code 52

Stick Coil Removal/Installation

- Refer to the Stick Coil Removal/Installation in the Electrical System chapter.

Stick Coil Primary Winding Resistance Inspection

- Refer to the Stick Coil Inspection in the Electrical System chapter.

★If the reading is within the standard, check the input voltage (see Stick Coil Input Voltage Inspection).

Stick Coil Input Voltage Inspection

NOTE

○*Be sure the battery is fully charged.*

- Turn the ignition switch to OFF.
- Remove the ECU (see ECU Removal).

○Do not disconnect the ECU connectors.

- Connect a digital meter [A] to the connector [B] with the needle adapter set.

Special Tool - Needle Adapter Set: 57001-1457

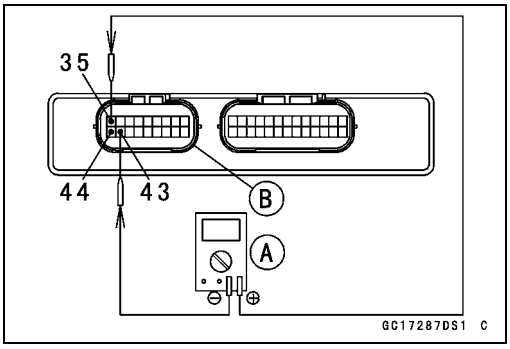

Stick Coil Input Voltage
Connections to ECU Connector:
For Stick Coil #1
Digital Meter (+) → BK lead (terminal 35)
Digital Meter (–) → BK/Y lead (terminal 43)
For Stick Coil #2
Digital Meter (+) → BK/O lead (terminal 44)
Digital Meter (–) → BK/Y lead (terminal 43)

- Measure the input voltage to each primary winding of the stick coils with the engine stopped and with the connectors joined.
- Turn the engine stop switch to run position.
- Turn the ignition switch to ON.

Input Voltage
Standard: Battery Voltage

- Turn the ignition switch to OFF.

★If the input voltage is out of the standard, check the wiring for continuity (see wiring diagram in this section).
★If the wiring is good, check the ECU for its ground and power supply (see ECU Power Supply Inspection).
★If the ground and power supply are good, replace the ECU (see ECU Removal/Installation).
★If the input voltage is within the standard, check the ECU for its ground and power supply (see ECU Power Supply Inspection).
★If the ground and power supply are good, replace the ECU (see ECU Removal/Installation).

Stick Coils #1, #2: (Service Code 51, 52)

Stick Coil Circuit

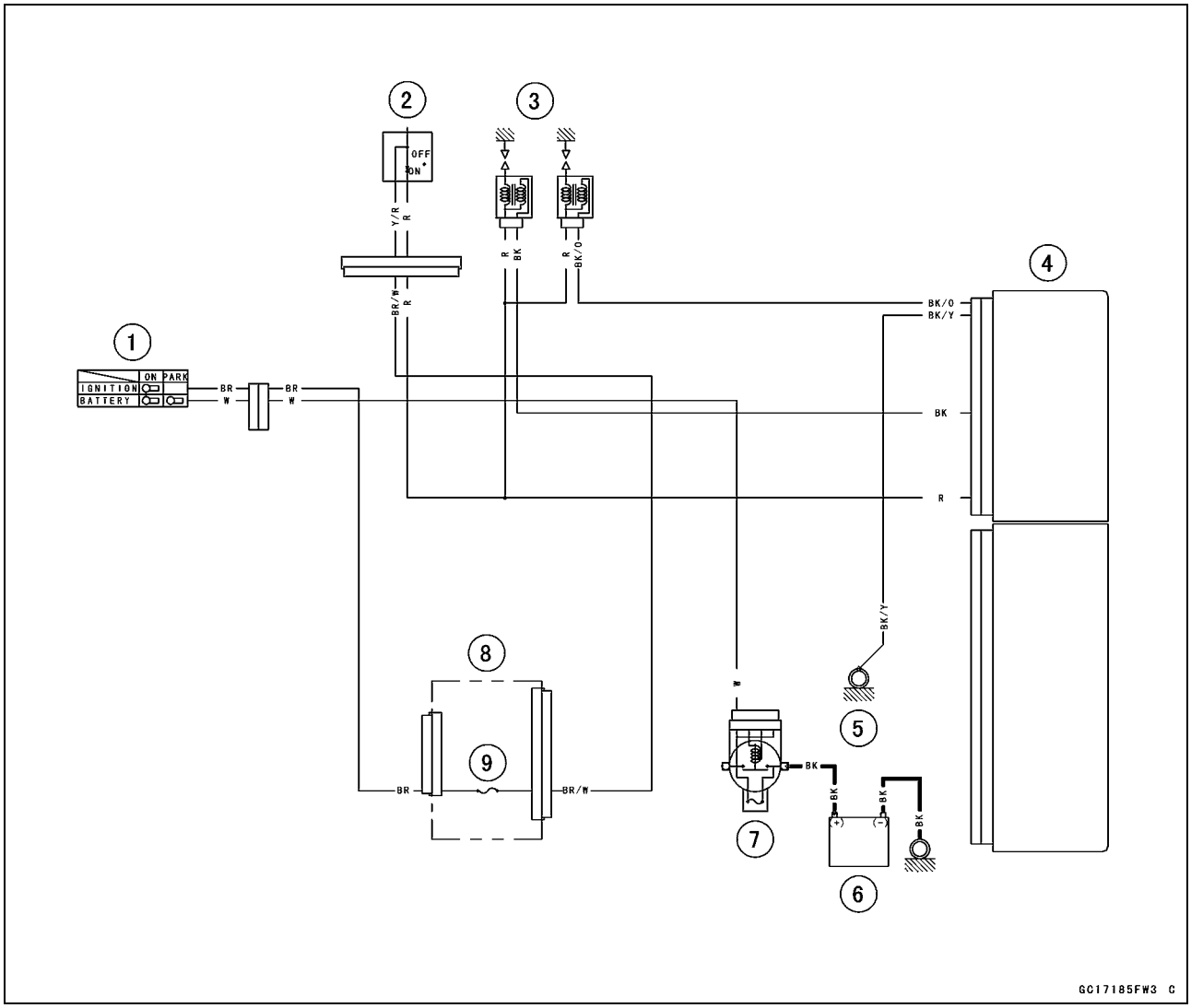

1. Ignition Switch
2. Engine Stop Switch
3. Stick Coils
4. ECU
5. Frame Ground
6. Battery 12 V 10 Ah
7. Main Fuse 30 A
8. Fuse Box 1
9. Ignition Fuse 10 A

Radiator Fan Relay (Service Code 56)

Radiator Fan Relay Removal/Installation

○The radiator fan relay is built in the relay box [A].

● Refer to the Relay Box Removal in the Electrical System chapter.

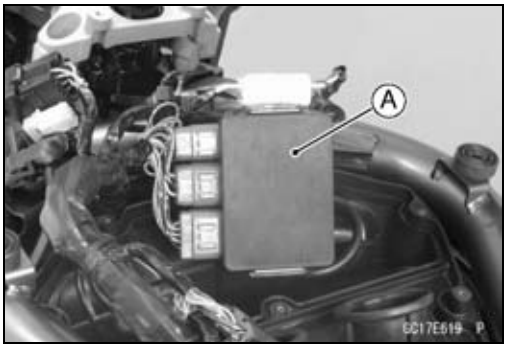

Radiator Fan Relay Inspection

● Refer to the Relay Circuit Inspection in the Electrical System chapter.

★If the radiator fan relay is normal, check the wiring for continuity (see wiring diagram in this section).

★If the wiring is good, check the ECU for its ground and power supply (see ECU Power Supply Inspection).

★If the ground and power supply are good, replace the ECU (see ECU Removal/Installation).

Radiator Fan Relay Circuit

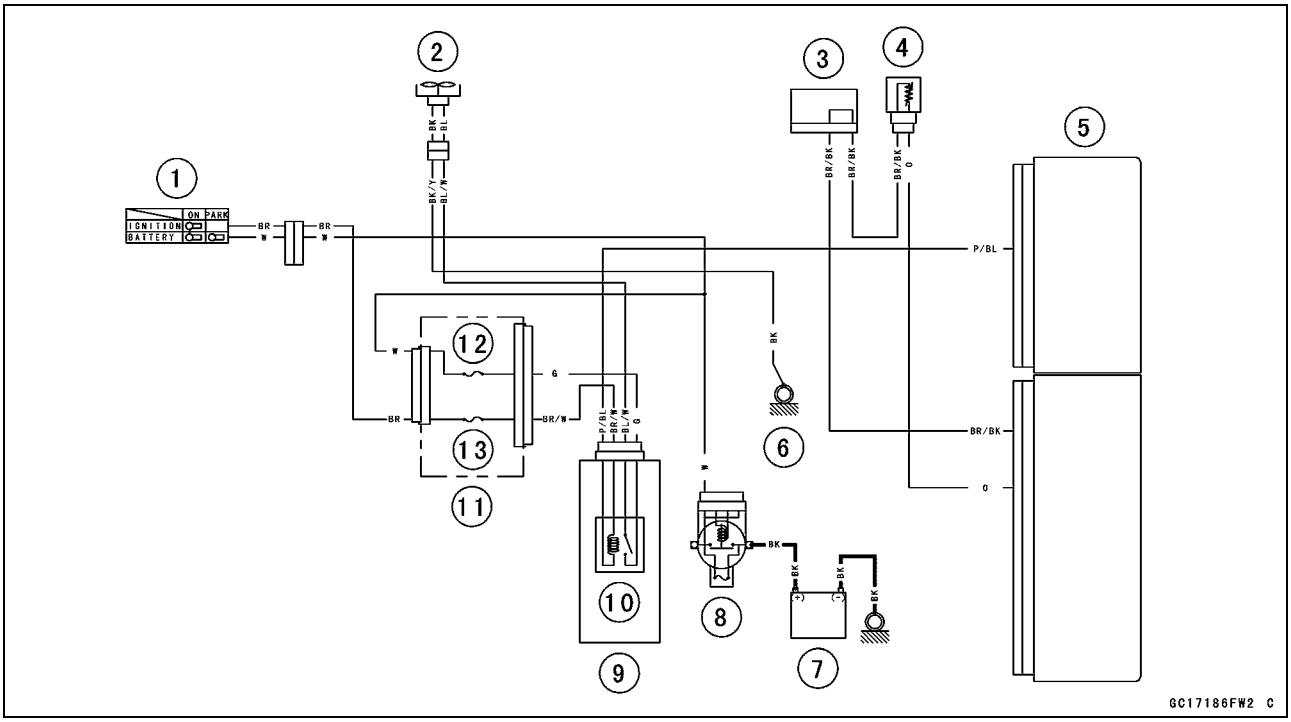

1. Ignition Switch
2. Fan Motor
3. Joint Connector D
4. Water Temperature Sensor
5. ECU
6. Frame Ground
7. Battery 12 V 10 Ah
8. Main Fuse 30 A
9. Relay Box
10. Radiator Fan Relay
11. Fuse Box 1
12. Radiator Fan Fuse 15 A
13. Ignition Fuse 10 A

Subthrottle Valve Actuator (Service Code 62)

Subthrottle Valve Actuator Removal

NOTICE

Do not remove the subthrottle valve actuator [A] since it has been adjusted and set with precision at the factory.
Never drop the throttle body assy, especially on a hard surface. Such a shock to the actuator can damage it.

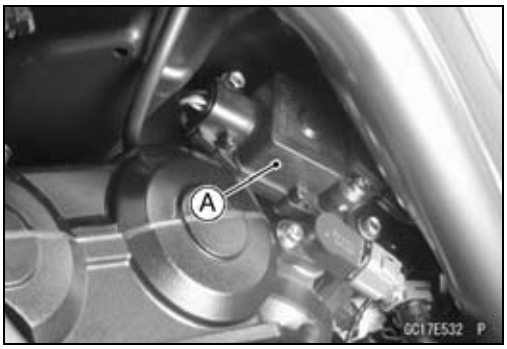

Subthrottle Valve Actuator Inspection

NOTE

○*Be sure the battery is fully charged.*

- Remove the air cleaner housing (see Air Cleaner Housing Removal).
- Turn the ignition switch to ON.
- Check to see that the subthrottle valves [A] open and close smoothly.

★If the subthrottle valves do not operate, check the subthrottle valve actuator resistance (see Subthrottle Valve Actuator Resistance Inspection).

Subthrottle Valve Actuator Resistance Inspection

- Turn the ignition switch to OFF.
- Remove the air cleaner housing (see Air Cleaner Housing Removal).
- Disconnect the subthrottle valve actuator connector [A].

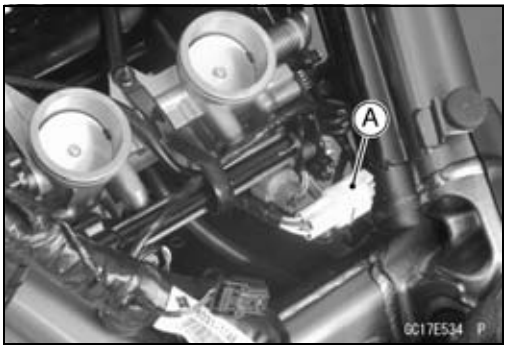

- Connect a digital meter to the subthrottle valve actuator connector [A].
- Measure the subthrottle valve actuator resistance.

Subthrottle Valve Actuator Resistance

Connections:	**BK lead [1] ⟷ P lead [2]**
	G lead [3] ⟷ W/BL lead [4]
Standard:	**About 5.5 ~ 7.5 Ω**

★If the reading is out of the standard, replace the throttle body assy (see Throttle Body Assy Removal/Installation).

★If the reading is within the range, check the input voltage (see Subthrottle Valve Actuator Input Voltage Inspection).

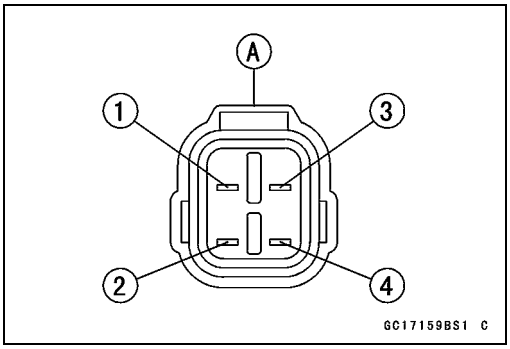

Subthrottle Valve Actuator (Service Code 62)

Subthrottle Valve Actuator Input Voltage Inspection

NOTE

○*Be sure the battery is fully charged.*

- Remove the air cleaner housing (see Air Cleaner Housing Removal).
- Turn the ignition switch to OFF.
- Disconnect the subthrottle valve actuator connector and connect the harness adapter [A] between these connectors as shown in the figure.
  Main Harness [B]
  Subthrottle Valve Actuator [C]

Special Tool - Measuring Adapter: 57001-1700

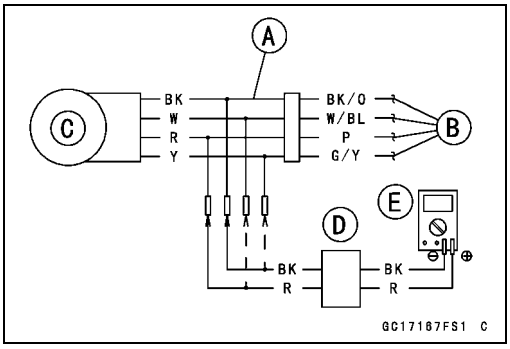

- Connect the peak voltage adapter [D] and a digital meter [E] to the harness adapter leads.

Special Tool - Peak Voltage Adapter: 57001-1415
Type: KEK-54-9-B

Subthrottle Valve Actuator Input Voltage Connections to Adapter:

(I) Digital Meter (+) → R (harness P) lead
Digital Meter (–) → BK (harness BK/O) lead
(II) Digital Meter (+) → W (harness W/BL) lead
Digital Meter (–) → Y (harness G/Y) lead

- Measure the actuator input voltage with the engine stopped and with the connector joined.
- Turn the ignition switch to ON.

Input Voltage
Standard: About DC 8.5 ~ 10.5 V

- Turn the ignition switch to OFF.

★If the reading is in specification, but the actuator does not operate, replace the throttle body assy (see Throttle Body Assy Removal/Installation).

★If the reading is out of the specification, remove the ECU and check the wiring for continuity between main harness connectors.

Special Tool - Hand Tester: 57001-1394

○Disconnect the ECU and actuator connectors.

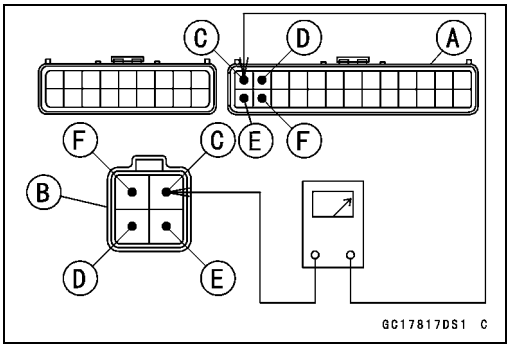

Wiring Continuity Inspection
ECU Connector [A] ←→
Subthrottle Valve Actuator Connector [B]
BK/O lead (ECU terminal 1) [C]
G/Y lead (ECU terminal 2) [D]
P lead (ECU terminal 14) [E]
W/BL lead (ECU terminal 15) [F]

★If the wiring is good, check the ECU for its ground and power supply (see ECU Power Supply Inspection).

★If the ground and power supply are good, replace the ECU (see ECU Removal/Installation).

Subthrottle Valve Actuator (Service Code 62)

Subthrottle Valve Actuator Circuit

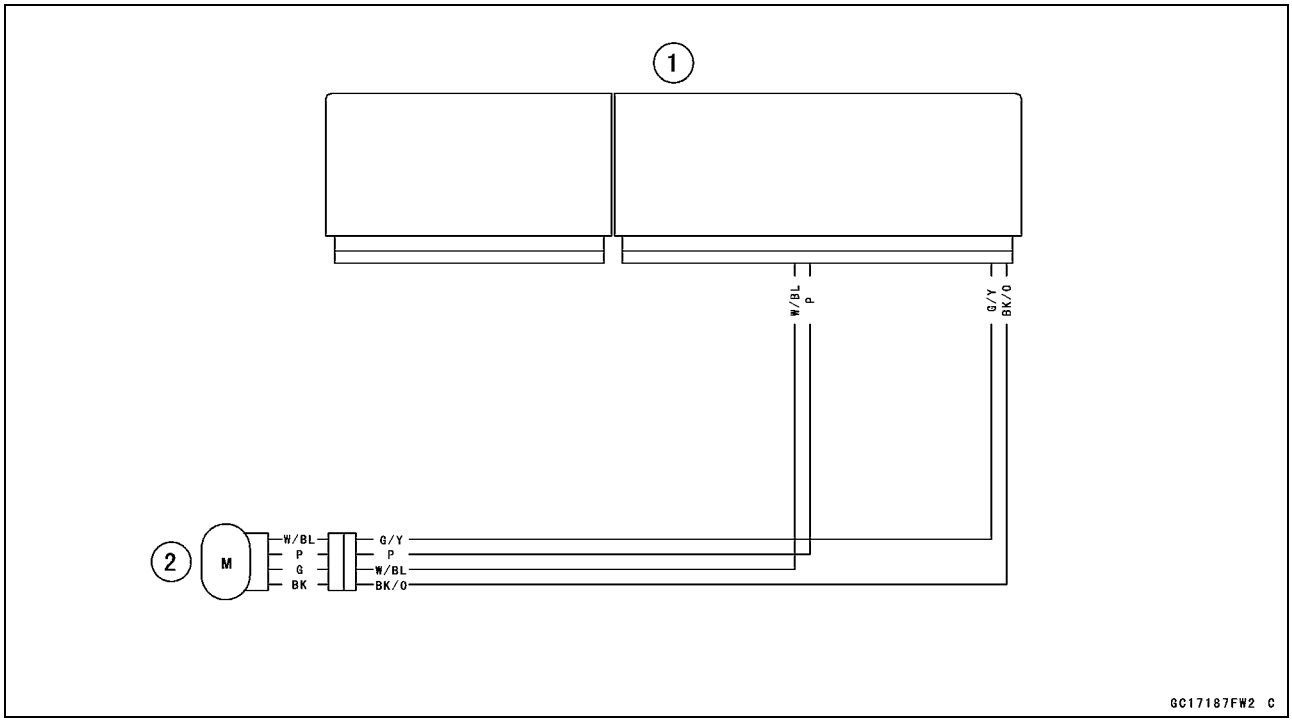

1. ECU
2. Subthrottle Valve Actuator

Air Switching Valve (Service Code 64)

Air Switching Valve Removal/Installation

- Refer to the Air Switching Valve Removal/Installation in the Engine Top End chapter.

Air Switching Valve Inspection

- Refer to the Air Switching Valve Operation Test/Unit Test in the Electrical System chapter.
- Remove the fuel tank (see Fuel Tank Removal) and check the wiring continuity, using the following diagram.

Air Switching Valve Circuit

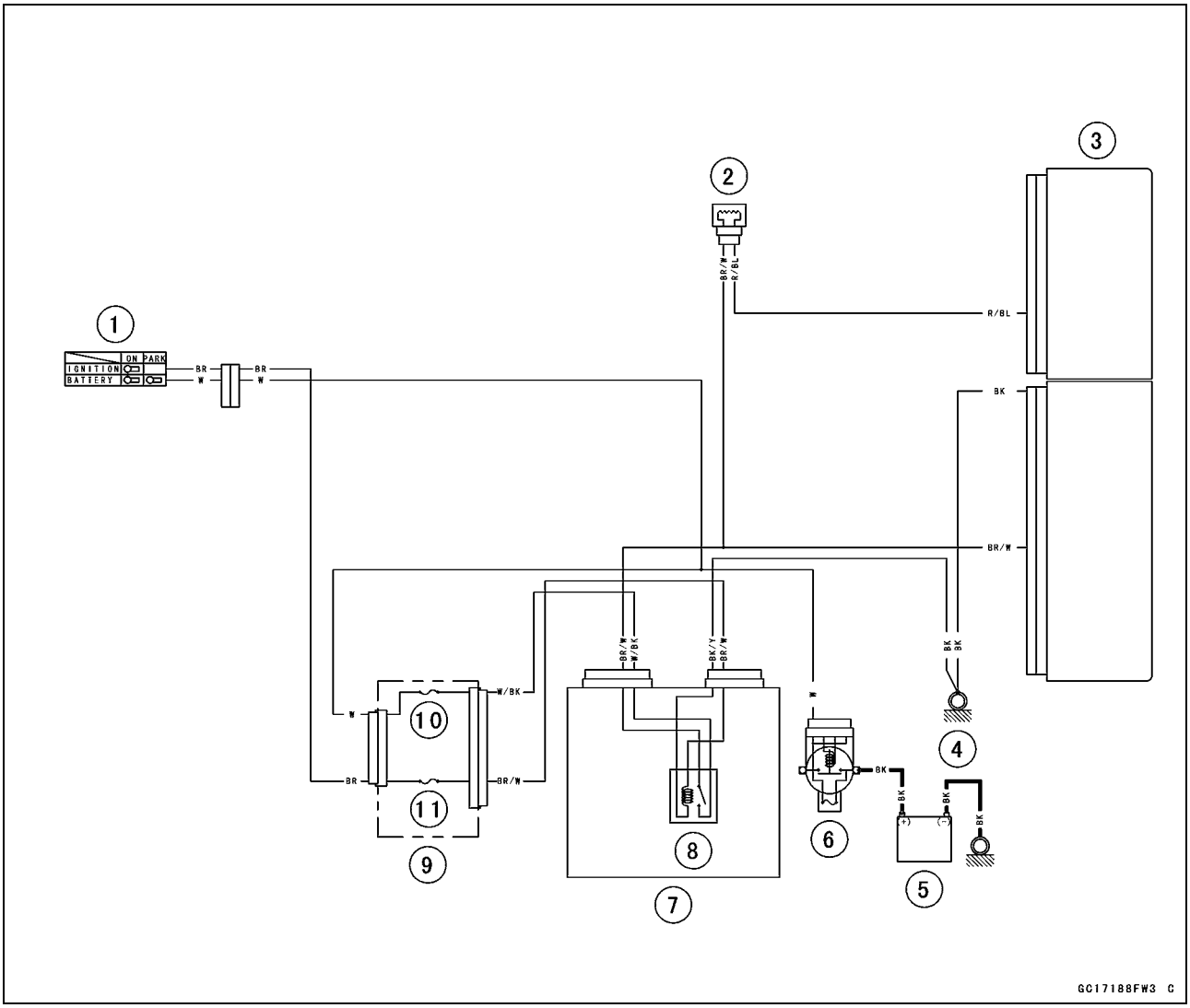

1. Ignition Switch
2. Air Switching Valve
3. ECU
4. Frame Ground 2
5. Battery 12 V 10 Ah
6. Main Fuse 30 A
7. Relay Box
8. ECU Main Relay
9. Fuse Box 1
10. FI Fuse 15 A
11. Ignition Fuse 10 A

Oxygen Sensor Heater (Service Code 67) (Equipped Models)

Oxygen Sensor Heater Removal/Installation

The oxygen sensor heater is bult in the oxygen sensor. So, the heater itself can not be removed. Remove the oxygen sensor (see Oxygen Sensor Removal in the Electrical System chapter).

Oxygen Sensor Heater Inspection

- Turn the ignition switch to OFF.
- Remove the engine sprocket cover (see Engine Sprocket Removal in the Final Drive chapter).
- Disconnect the oxygen sensor lead connector [A].

- Connect a digital meter [A] to the oxygen sensor lead connector [B].
- Measure the oxygen sensor heater resistance.

Oxygen Sensor Heater Resistance
Connections: BK lead [C] ⟷ BK lead [D]
Standard: 11.7 ~ 14.5 Ω at 20°C (68°F)

★If the reading is out of the standard, replace the sensor.
★If the reading is within the standard, check the power source voltage (see Oxygen Sensor Heater Power Source Voltage Inspection).

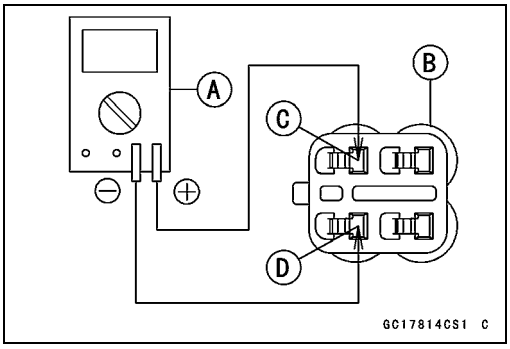

Oxygen Sensor Heater (Service Code 67) (Equipped Models)

Oxygen Sensor Heater Power Source Voltage Inspection

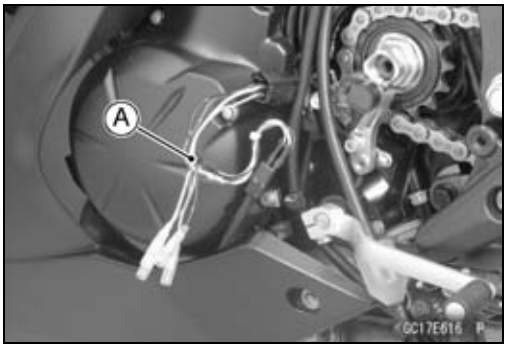

NOTE

○*Be sure the battery is fully charged.*

- Turn the ignition switch to OFF.
- Remove the engine sprocket cover (see Engine Sprocket Removal in the Final Drive chapter).
- Disconnect the oxygen sensor lead connector and connect the oxygen sensor measuring adapter [A] between these connectors.

Special Tool - Oxygen Sensor Measuring Adapter: 57001-1682

- Connect a digital meter to the harness adapter lead.

Oxygen Sensor Power Source Voltage
Connections to Adapter:
Digital Meter (+) → W (sensor BK) lead
Digital Meter (–) → Battery (–) terminal

- Measure the power source voltage with the engine stopped and with the connector joined.
- Turn the ignition switch to ON.

Power Source Voltage
Standard: Battery Voltage

- Turn the ignition switch to OFF.

★If the reading is within specification, but the problem still exists, replace the ECU (see ECU Removal/Installation).
★If the reading is out of the standard, check the following.
Oxygen Sensor Heater Fuse 10 A (see Fuse Inspection in the Electrical System chapter)
Power Source Wiring (see wiring diagram in this section)

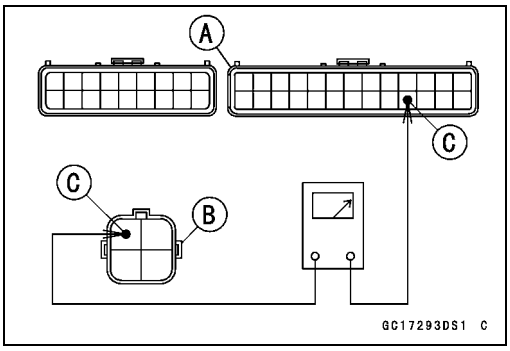

★If the fuse and wiring are good, remove the ECU and check the wiring for continuity between main harness connectors.

Special Tool - Hand Tester: 57001-1394

○Disconnect the ECU and sensor connectors.

Wiring Continuity Inspection
ECU Connector [A] ←→
Oxygen Sensor Connector [B]
P/BK lead (ECU terminal 23) [C]

★If the wiring is good, check the ECU for its ground and power supply (see ECU Power Supply Inspection).
★If the ground and power supply are good, replace the ECU (see ECU Removal/Installation).

Oxygen Sensor Heater (Service Code 67) (Equipped Models)

Oxygen Sensor Circuit

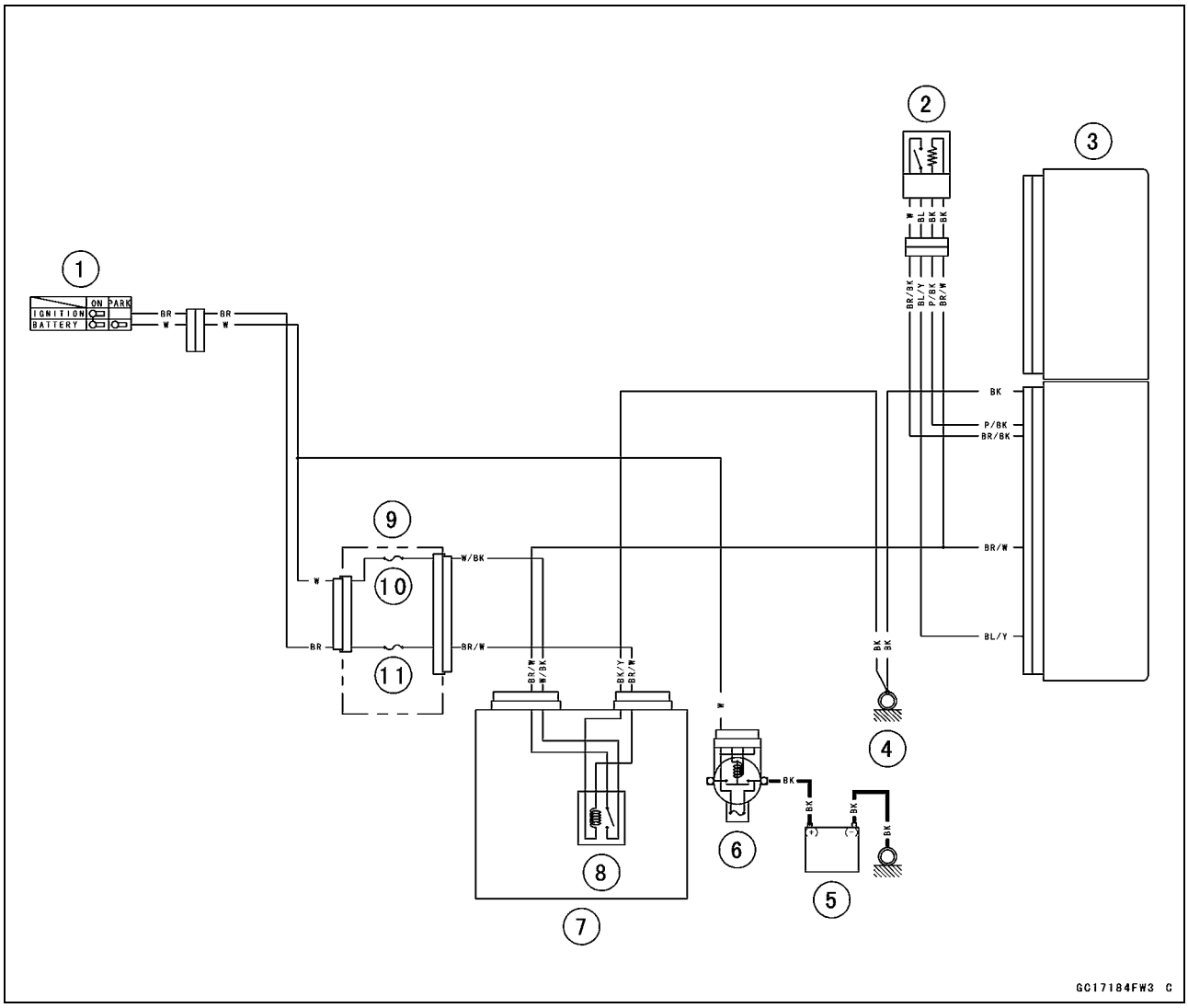

1. Ignition Switch
2. Oxygen Sensor
3. ECU
4. Frame Ground 2
5. Battery 12 V 10 Ah
6. Main Fuse 30 A
7. Relay Box
8. ECU Main Relay
9. Fuse Box 1
10. FI Fuse 15 A
11. Ignition Fuse 10 A

Oxygen Sensor-Incorrect Output Voltage (Service Code 94) (Equipped Models)

Oxygen Sensor Removal/Installation

- Refer to the Oxygen Sensor Removal/Installation in the Electrical System chapter.

Oxygen Sensor Inspection

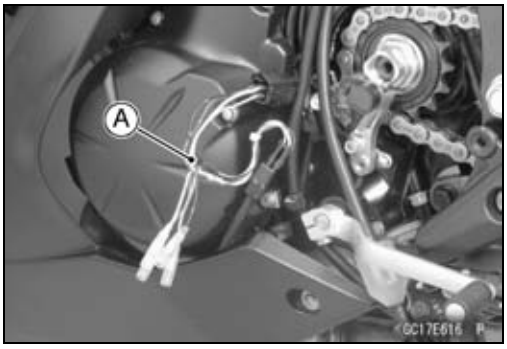

- Turn the ignition switch to OFF.
- Remove the engine sprocket cover (see Engine Sprocket Removal in the Final Drive chapter).
- Disconnect the oxygen sensor connector and connect the oxygen sensor measuring adapter [A] between these connectors.

  Special Tool - Oxygen Sensor Measuring Adapter: 57001 -1682

- Connect a digital meter to the harness adapter lead.

  Oxygen Sensor Output Voltage
  Connections to Adapter:
  Meter (+) → BL (sensor BL) lead
  Meter (−) → BR (sensor W) lead

- Remove the left middle fairing (see Middle Fairing Removal in the Frame chapter).
- Remove the air switching valve hose [A] from the fitting.
- Install the suitable plug on the fitting to shut off the secondary air.

- Turn the ignition switch to ON.
- Warm up the engine thoroughly until the radiator fan starts.
- Measure the output voltage with the connector joined.

  Output Voltage (with Plug)
  Standard: DC 0.7 V or more

Oxygen Sensor-Incorrect Output Voltage (Service Code 94) (Equipped Models)

● Next, remove the plug from the fitting [A] with idling.

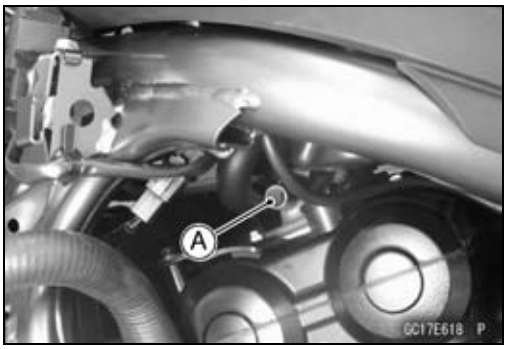

⚠ WARNING

The engine gets extremely hot during normal operation and can cause serious burns. Never touch a hot engine.

● Measure the output voltage with the connector joined.

Output Voltage (without Plug)
Standard: DC 0.2 V or less

● Turn the ignition switch to OFF.

★If the reading is out of the standard (with plug: DC 0.7 V or more, without plug: DC 0.2 V or less), check the following.
Fuel Pressure (see Fuel Pressure Inspection)
Fuel Injector (see Fuel Injectors section)

★If the fuel pressure and fuel injectors are good, replace the sensor.

★If the reading is within the standard (with plug: DC 0.7 V or more, without plug: DC 0.2 V or less), check the ECU for its ground and power supply (see ECU Power Supply Inspection).

★If the ground and power supply are good, replace the ECU (see ECU Removal/Installation).

Oxygen Sensor-Incorrect Output Voltage (Service Code 94) (Equipped Models)

Oxygen Sensor Circuit

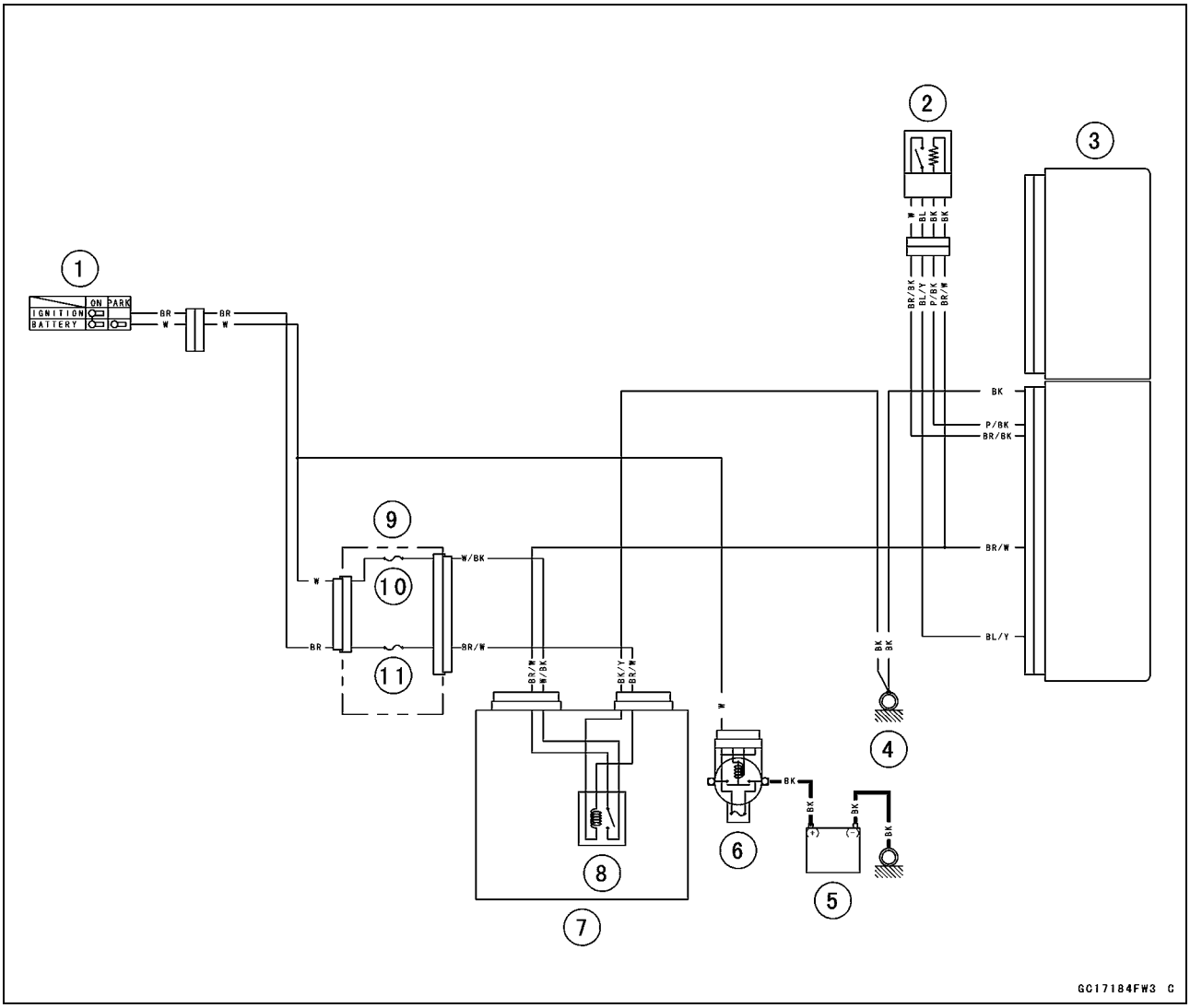

1. Ignition Switch
2. Oxygen Sensor
3. ECU
4. Frame Ground 2
5. Battery 12 V 10 Ah
6. Main Fuse 30 A
7. Relay Box
8. ECU Main Relay
9. Fuse Box 1
10. FI Fuse 15 A
11. Ignition Fuse 10 A

Purge Valve (Service Code 3A) (CAL, SEA-B1 and TH Models)

Purge Valve Removal/Installation

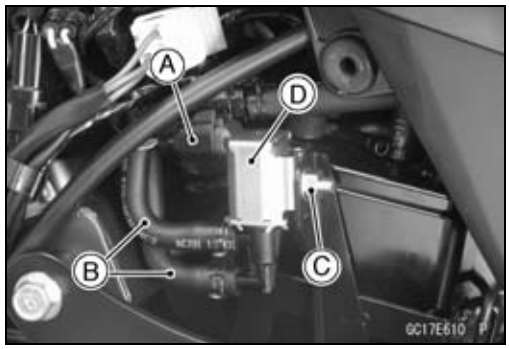

- Remove:
  Left Frame Cover (see Frame Cover Removal in the Frame chapter)
  Purge Valve Connector [A] (Disconnect)
  Tubes [B] (Disconnect)
  Purge Valve Mounting Nut [C]
  Purge Valve [D]
- Installation is the reverse of removal.

○Tighten:

Torque - Purge Valve Mounting Nut: 7.0 N·m (0.71 kgf·m, 62 in·lb)

○Run the tubes correctly (see Cable, Wire, and Hose Routing section in the Appendix chapter).

Purge Valve Inspection

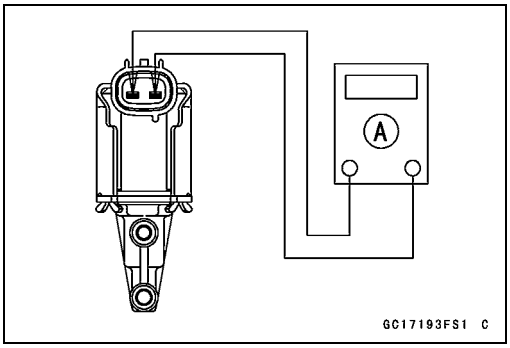

- Remove the purge valve (see Purge Valve Removal/Installation).
- Set the hand tester [A] to the × 1 Ω range and connect it to the purge valve terminals as shown in the figure.

Special Tool - Hand Tester: 57001-1394

Purge Valve Resistance
Standard: 30 ~ 34 Ω at 20°C (68°F)

★If the resistance reading is out of the specified value, replace it with a new one.

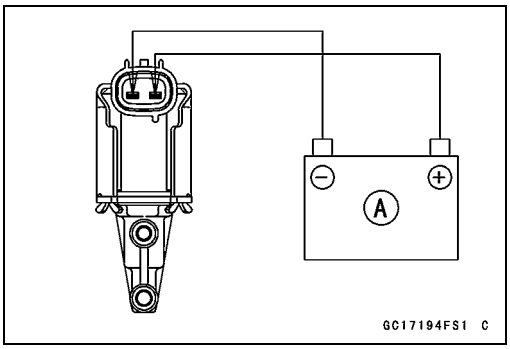

- Connect the 12 V battery [A] to the purge valve terminals as shown in the figure.

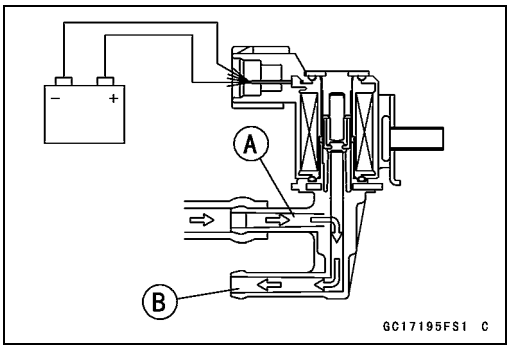

- Blow the air to the intake air duct [A], and make sure that the air flows from the outlet air duct [B].

Purge Valve (Service Code 3A) (CAL, SEA-B1 and TH Models)

- Disconnect the 12 V battery.
- Blow the air to the intake air duct [A] again, and make sure that the air does not flow from the outlet air duct [B].

★If the purge valve dose not operate as described, replace it with a new one.

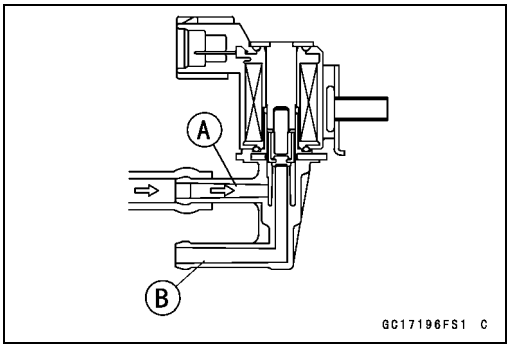

Purge Valve Circuit

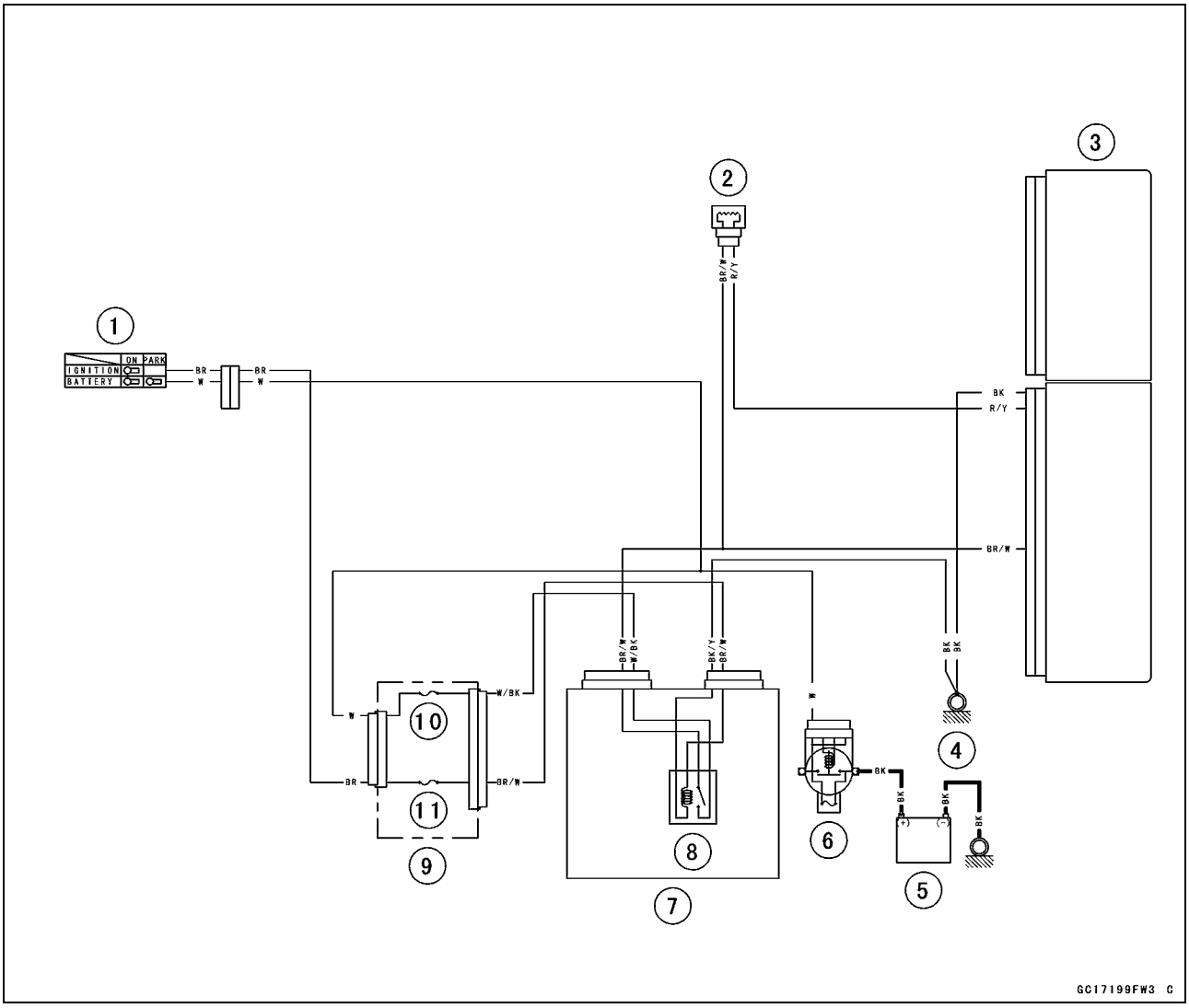

1. Ignition Switch
2. Purge Valve
3. ECU
4. Frame Ground 2
5. Battery 12 V 10 Ah
6. Main Fuse 30 A
7. Relay Box
8. ECU Main Relay
9. Fuse Box 1
10. FI Fuse 15 A
11. Ignition Fuse 10 A

Yellow Engine Warning Indicator Light (LED)

Yellow Engine Warning Indicator Light (LED) Inspection

- Refer to the Meter Unit Inspection in the Electrical System chapter.

Yellow Engine Warning Indicator Light (LED) Circuit for DFI System

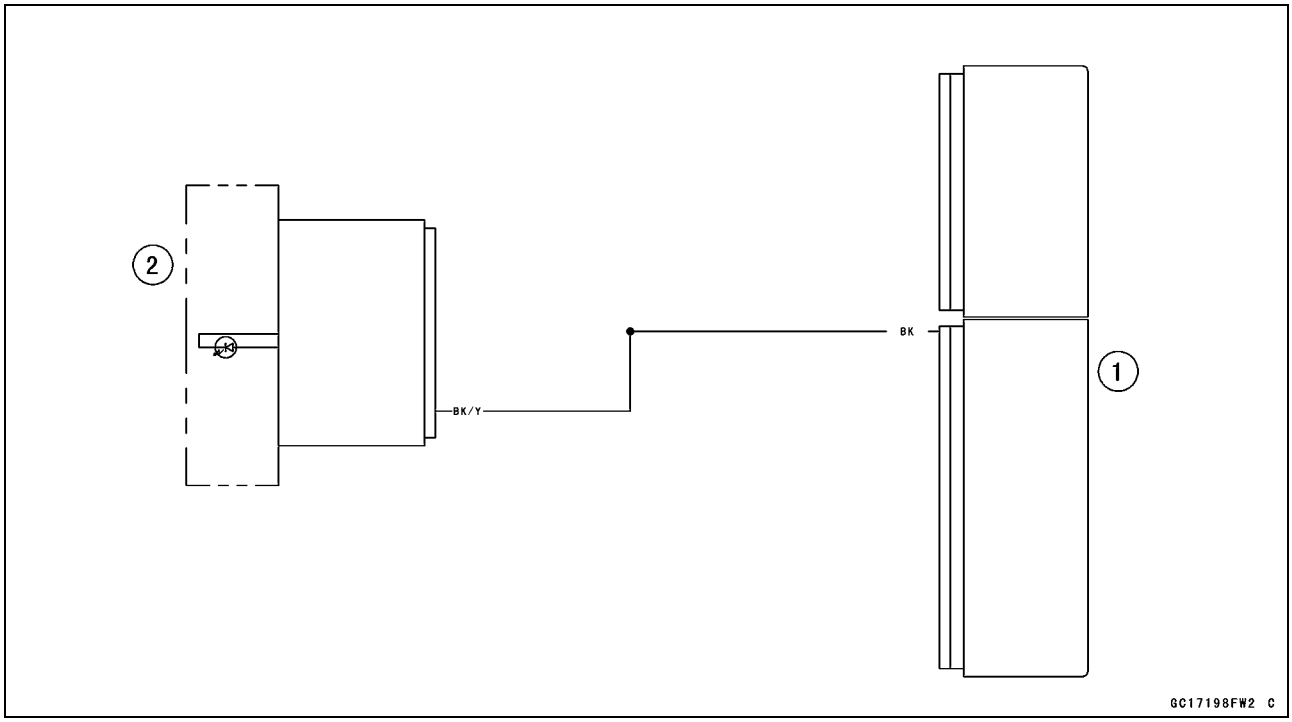

1. ECU
2. Meter Unit

ECU

ECU Identification

○Most countries have their own regulations, so each ECU has different characteristic. So, do not confuse ECU with each other and use only the ECU for your model. Otherwise, the motorcycle can not clear the regulation.

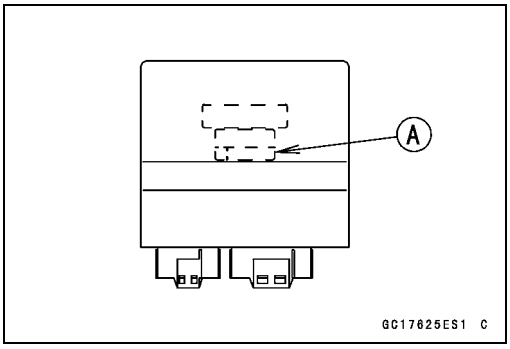

ECU Identification

Part Number [A]	Specification
21175-0705	AU
	AU LAMS
	ID
	PH
	WVTA (FULL H)
	GB WVTA (FULL H)
21175-0706	SEA-B2
21175-0707	SEA-B1
	TH
21175-0732	US
	CA
21175-0733	CAL
21175-0734	BR
21175-0799	IN

ECU Removal

NOTICE

Never drop the ECU, especially on a hard surface. Such a shock to the ECU can damage it.

- Remove the fuel tank (see Fuel Tank Removal).
- Disconnect the connectors [A] and remove the ECU [B].

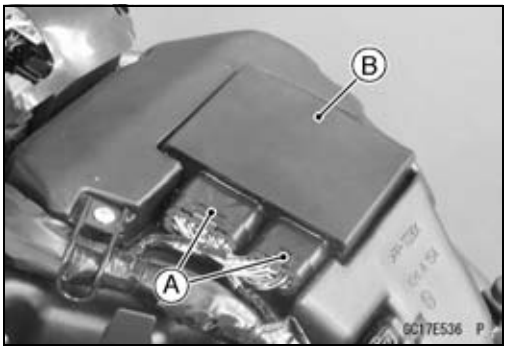

ECU Installation

- Installation is the reverse of removal.

ECU Power Supply Inspection

- Remove the fuel tank (see Fuel Tank Removal).
- Visually inspect the ECU connectors.

★If the connector is clogged with mud or dust, blow it off with compressed air.

- Remove the ECU (see ECU Removal).
- Visually inspect the terminals [A] of the ECU connectors.

★If the terminals of the main harness connectors are damaged, replace the main harness.

★If the terminals of the ECU connectors are damaged, replace the ECU.

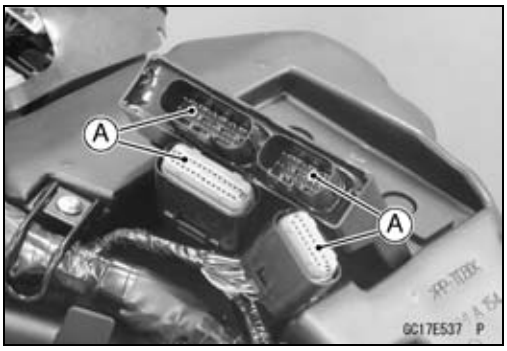

ECU

- Turn the ignition switch to OFF.
- Disconnect the ECU connectors [A].
- Set the hand tester [B] to the × 1 Ω range and check the following wiring for continuity.

Special Tool - Hand Tester: 57001-1394

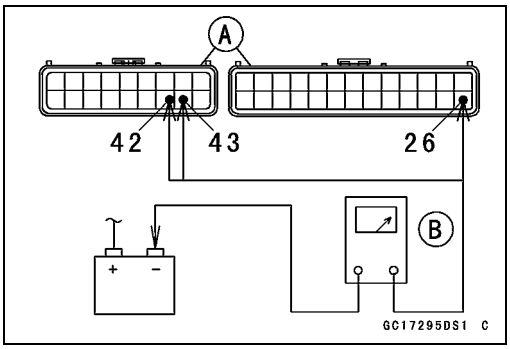

ECU Grounding Continuity Inspection

Connections:

(I) BK lead (ECU terminal 26) or BK/Y leads (ECU terminal 42 or 43) ⟷ **Battery (–) Terminal**

(II) Engine Ground ⟷ **Battery (–) Terminal**

Criteria:

Both: 0 Ω

★If no continuity, check the connectors, the engine ground lead, or main harness, and repair or replace them if necessary.

★If the wiring is good, check the power source voltage of the ECU.

NOTE

○*Be sure the battery is fully charged.*

- Connect the ECU connectors.
- Connect a digital meter [A] to the connector [B] with the needle adapter set.

Special Tool - Needle Adapter Set: 57001-1457

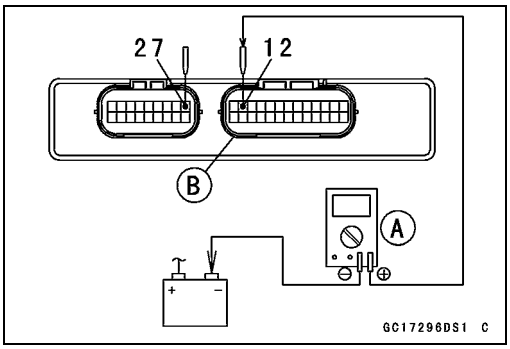

ECU Power Supply Inspection

Connections:

(I) Digital Meter (+) → Terminal 12 (BR/W)

Digital Meter (–) → Battery (–) terminal

(II) Digital Meter (+) → Terminal 27 (W/BK)

Digital Meter (–) → Battery (–) terminal

Ignition Switch OFF:

Terminal 12 (BR/W): 0 V

Terminal 27 (W/BK): Battery Voltage

Ignition Switch ON:

Both: Battery Voltage

★If the reading is out of the specification, check the following.

Main Fuse 30 A or Fuse Box Fuse (see Fuse Inspection in the Electrical System chapter)

ECU Main Relay (see Relay Circuit Inspection in the Electrical System chapter)

Power Source Wiring (see wiring diagram in this section)

★If the fuse, wiring and relay are good, replace the ECU (see ECU Removal/Installation).

ECU

ECU Power Source Circuit

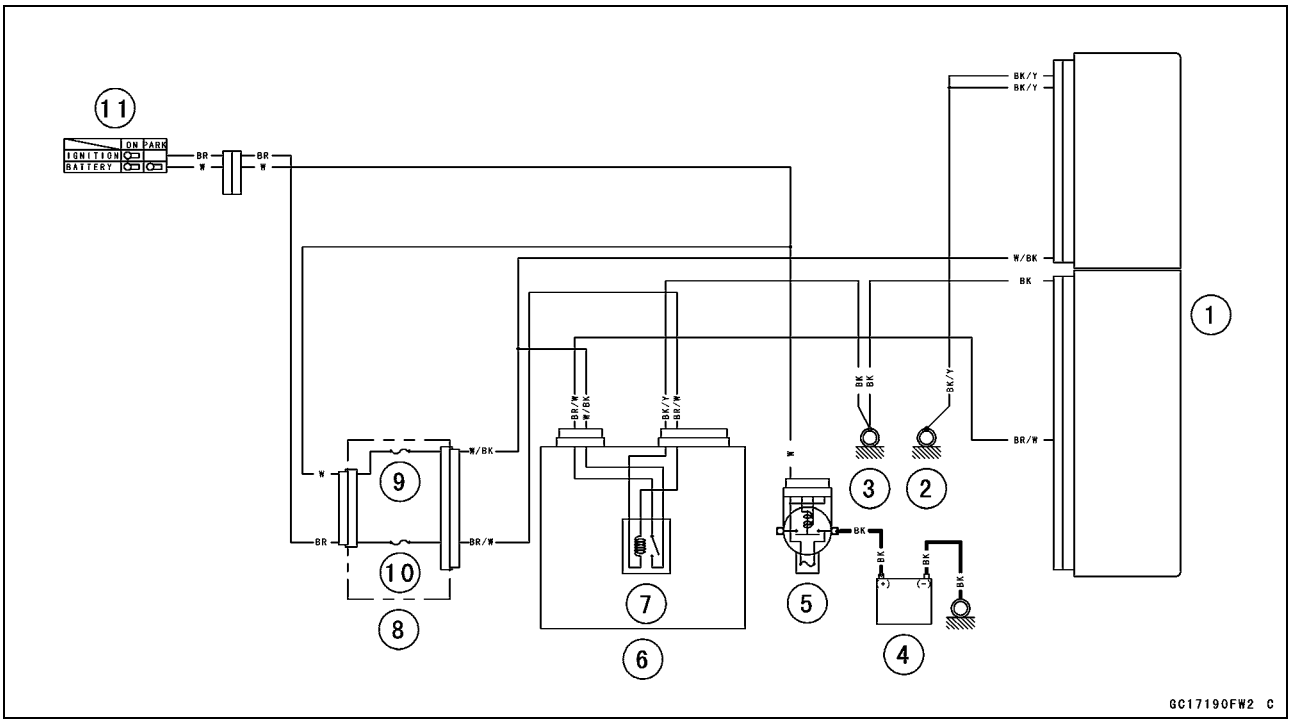

1. ECU
2. Frame Ground 1
3. Frame Ground 2
4. Battery 12 V 10 Ah
5. Main Fuse 30 A
6. Relay Box
7. ECU Main Relay
8. Fuse Box 1
9. FI Fuse 15 A
10. Ignition Fuse 10 A
11. Ignition Switch

DFI Power Source

ECU Fuse Removal

- Refer to the 15 A ECU Fuse Removal in the Electrical System chapter.

ECU Fuse Installation

★If a fuse fails during operation, inspect the DFI system to determine the cause, and then replace it with a new fuse of proper amperage.

- Refer to the Fuse Installation in the Electrical System chapter.

ECU Fuse Inspection

- Refer to the Fuse Inspection in the Electrical System chapter.

ECU Main Relay Removal/Installation

○The ECU main relay is built in the relay box [A].

- Refer to the Relay Box Removal in the Electrical System chapter.

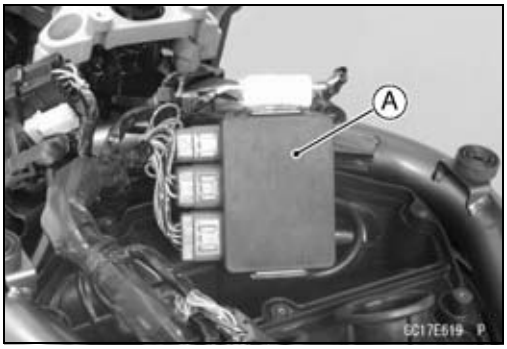

ECU Main Relay Inspection

- Refer to the Relay Circuit Inspection in the Electrical System chapter.

Fuel Line

Fuel Pressure Inspection

NOTE

○*Be sure the battery is fully charged.*

- Remove:
  Fuel Tank (see Fuel Tank Removal)
  Fuel Hose (see Fuel Hose Replacement in the Periodic Maintenance chapter)

○Be sure to place a piece of cloth around the fuel supply pipes of the fuel pump and the throttle body assy.

⚠ WARNING

Fuel is flammable and explosive under certain conditions and can cause severe burns. Be prepared for fuel spillage; any spilled fuel must be completely wiped up immediately. When the fuel hose is disconnected, fuel spills out from the hose and the pipe because of residual pressure. Cover the hose connection with a piece of clean cloth to prevent fuel spillage.

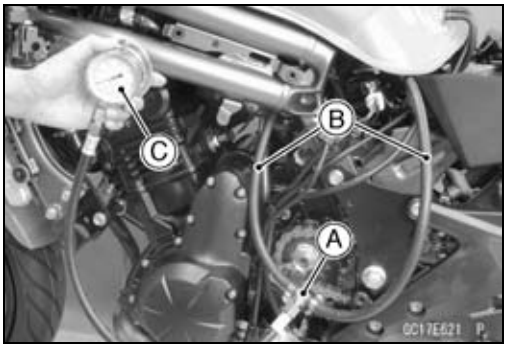

- Install the fuel pressure gauge adapter [A] and fuel hoses (Special Tool: 57001-1607) [B] between the fuel supply pipes of the fuel pump and throttle body assy.
- Secure the fuel hoses with the clamps.
- Connect the pressure gauge [C] to the fuel pressure gauge adapter.

Special Tools - Oil Pressure Gauge, 5 kgf/cm²: 57001-125
Fuel Pressure Gauge Adapter: 57001-1593
Fuel Hose: 57001-1607

⚠ WARNING

Fuel is extremely flammable and can be explosive under certain conditions resulting in serious injury or death. Do not try to start the engine with the fuel hoses disconnected.

- Connect the fuel pump lead connector.
- Turn the engine stop switch to run position.
- Turn the ignition switch to ON. The fuel pump will turn 3 seconds, and then stop.

NOTE

○*Turn the ignition switch to ON and inspect the fuel line leakage after installing the special tools.*

NOTICE

Do not drive the fuel pump 3 seconds or more without the fuel in the fuel tank. If the fuel pump is driven without the fuel, it may be damaged.

- Start the engine, and let it idle.
- Measure the fuel pressure with the engine idling.

Fuel Pressure (with Engine Idling)
Standard: 294 kPa (3.0 kgf/cm², 43 psi)

Fuel Line

NOTE

○*The gauge needle will fluctuate. Read the pressure at the average of the maximum and minimum indications.*

- Turn the ignition switch to OFF.

★If the fuel pressure is much higher than specified, the fuel pressure regulator in the fuel pump have been clogged or stuck. Replace the fuel pump (see Fuel Pump Removal/Installation).

★If the fuel pressure is much lower than specified, check the following.

Fuel Line Leakage (see Fuel Injector Fuel Line Inspection)

Amount of Fuel Flow (see Fuel Flow Rate Inspection)

- After above checks, measure the fuel pressure again.
- Remove the fuel pressure gauge, hoses and adapter.
- Install:

Fuel Hose (see Fuel Hose Replacement in the Periodic Maintenance chapter)

Fuel Tank (see Fuel Tank Installation)

- Start the engine and check for fuel leakage.

Fuel Flow Rate Inspection

⚠ WARNING

Gasoline is extremely flammable and can be explosive under certain conditions, creating the potential for serious burns. Make sure the area is well-ventilated and free from any source of flame or sparks; this includes any appliance with a pilot light. Do not smoke. Turn the ignition switch to OFF. Be prepared for fuel spillage; any spilled fuel must be completely wiped up immediately.

NOTE

○*Be sure the battery is fully charged.*

- Turn the ignition switch to OFF.
- Wait until the engine cools down.
- Prepare a fuel hose (Special Tool: 57001-1607) and a measuring cylinder.

Special Tool - Fuel Hose: 57001-1607

- Remove:

Side Covers (see Side Cover Removal in the Frame chapter)

Fuel Tank Bolts (see Fuel Tank Removal)

Fuel Line

- Open the fuel tank cap [A] to lower the pressure in the tank.
- Remove the fuel hose from the fuel pump (see Fuel Tank Removal).

○Be sure to place a piece of cloth around the fuel supply pipe of the fuel pump.

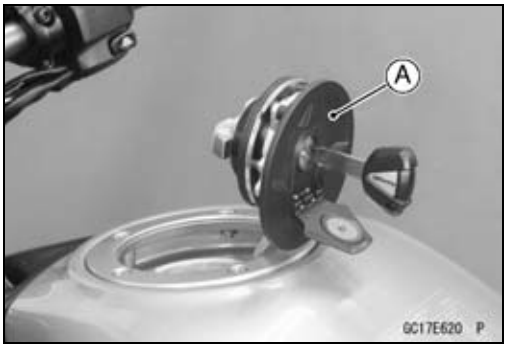

⚠ WARNING

Fuel is flammable and explosive under certain conditions and can cause severe burns. Be prepared for fuel spillage; any spilled fuel must be completely wiped up immediately. When the fuel hose is disconnected, fuel spills out from the hose and the pipe because of residual pressure. Cover the hose connection with a piece of clean cloth to prevent fuel spillage.

- Connect the prepared fuel hose [A] to the fuel supply pipe of the fuel pump.
- Secure the fuel hose with a clamp.
- Insert the fuel hose into the measuring cylinder [B].

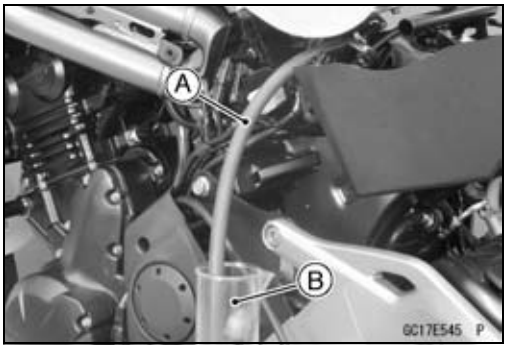

⚠ WARNING

Wipe off spilled out fuel immediately. Be sure to hold the measuring cylinder vertical.

- Close the fuel tank cap.
- Turn the engine stop switch to run position.
- Turn the ignition switch to ON.

○The fuel pump should operate for 3 seconds, and then should stop.

NOTICE

Do not drive the fuel pump 3 seconds or more without the fuel in the fuel tank. If the fuel pump is driven without the fuel, it may be damaged.

- Measure the discharge for 3 seconds.

○Repeat this operation several times.

Amount of Fuel Flow
Standard: 30 mL (1.0 US oz.) or more for 3 seconds

- Turn the ignition switch to OFF.

★If the fuel flow is much less than the specified, replace the fuel pump (see Fuel Pump Removal/Installation).

- Install the fuel tank (see Fuel Tank Installation).
- Start the engine and check for fuel leakage.

Fuel Pump

Fuel Pump Removal

⚠ WARNING

Gasoline is extremely flammable and can be explosive under certain conditions, creating the potential for serious burns. Make sure the area is well-ventilated and free from any source of flame or sparks; this includes any appliance with a pilot light. Do not smoke. Turn the ignition switch to OFF. Disconnect the battery (–) terminal. To avoid fuel spills, draw it from the tank when the engine is cold. Be prepared for fuel spillage; any spilled fuel must be completely wiped up immediately.

NOTICE

Never drop the fuel pump, especially on a hard surface. Such a shock to the pump can damage it.

- Draw the fuel out from the fuel tank with a commercially available electric pump.
- Remove the fuel tank (see Fuel Tank Removal).

○Be careful of fuel spillage from the fuel tank since fuel still remains in the fuel tank and fuel pump. Plug the fuel supply pipe of the fuel pump.

- Turn the fuel tank upside down.
- Remove:
  Fuel Pump Bolts [A]
  Fuel Pump [B] and Gasket
- Discard the fuel pump gasket.

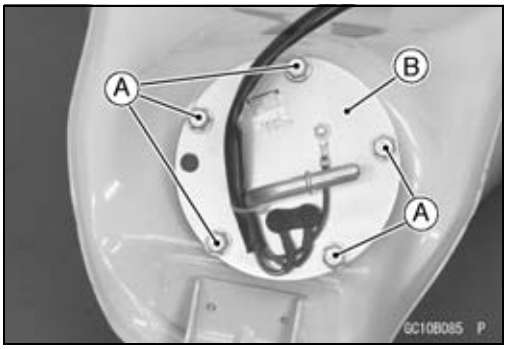

NOTICE

Do not pull the leads of the fuel pump. If they are pulled, the lead terminals may be damaged.

Fuel Pump Installation

- Remove dirt or dust from the fuel pump [A] by lightly applying compressed air.

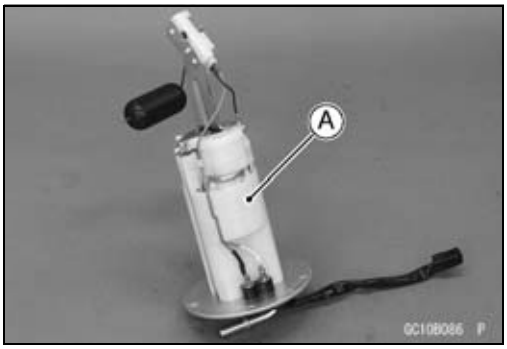

Fuel Pump

- Replace the fuel pump gasket [A] with a new one and apply grease to it.

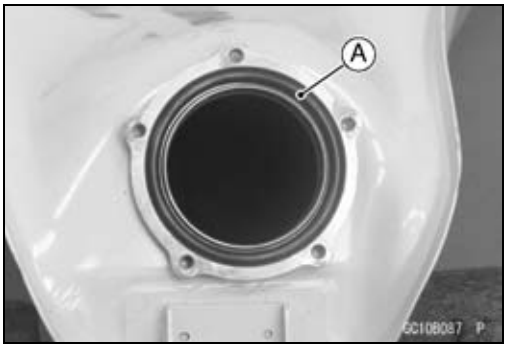

- Apply a non-permanent locking agent to the threads of the fuel pump bolts.
- Tighten the fuel pump bolts to a snug fit, and tighten them alternating diagonally.

Torque - Fuel Pump Bolts: 9.8 N·m (1.0 kgf·m, 87 in·lb)

- Tighten the pump bolts again alternating diagonally to check the tightness.

Fuel Pump Operation Inspection

NOTE

○Be sure the battery is fully charged.

- Turn the engine stop switch to run position.
- Turn the ignition switch to ON and make sure that the fuel pump operates (make light sounds) for 3 seconds, and then stops.
- Turn the ignition switch to OFF.

★If the pump does not operate as described above, inspect the operating voltage (see Fuel Pump Operating Voltage Inspection).

Fuel Pump

Fuel Pump Operating Voltage Inspection

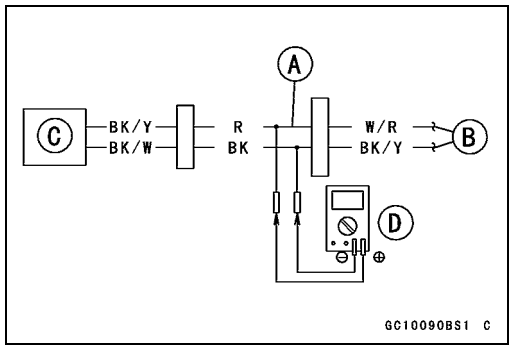

NOTE

○*Be sure the battery is fully charged.*

- Turn the ignition switch to OFF.
- Remove the left side cover (see Side Cover Removal in the Frame chapter).
- Disconnect the fuel pump lead connector and connect the harness adapter [A] between these connectors as shown in the figure.
  Main Harness [B]
  Fuel Pump [C]

Special Tool - Measuring Adapter: 57001-1700

- Connect a digital meter [D] to the harness adapter leads.

Fuel Pump Operating Voltage
Connections to Adapter:
Digital Meter (+) → R (pump BK/Y) lead
Digital Meter (–) → BK (pump BK/W) lead

- Measure the operating voltage with engine stopped and with the connector joined.
- Turn the engine stop switch to run position.
- Turn the ignition switch to ON.

Operating Voltage
Standard: Battery Voltage for 3 seconds, and then 0 V

- Turn the ignition switch to OFF.

★If the reading stays on battery voltage and never shows 0 V, check the fuel pump relay (see Relay Circuit Inspection in the Electrical System chapter).
★If the pump relay is normal, check the ECU for its ground and power supply (see ECU Power Supply Inspection).
★If the ground and power supply are good, replace the ECU (see ECU Removal/Installation).
★If there is still no battery voltage, check the ECU main relay and fuel pump relay (see Relay Circuit Inspection in the Electrical System chapter).
★If the main relay and pump relay are normal, check the wiring for continuity (see wiring diagram in this section).
★If the wiring is good, check the ECU for its ground and power supply (see ECU Power Supply Inspection).
★If the ground and power supply are good, replace the ECU (see ECU Removal/Installation).
★If the reading is in specification, but the pump does not operate, replace the fuel pump (see Fuel Pump Removal/Installation).

Fuel Pump

Pressure Regulator Removal

○The pressure regulator [A] is built into the fuel pump [B] and cannot be removed.

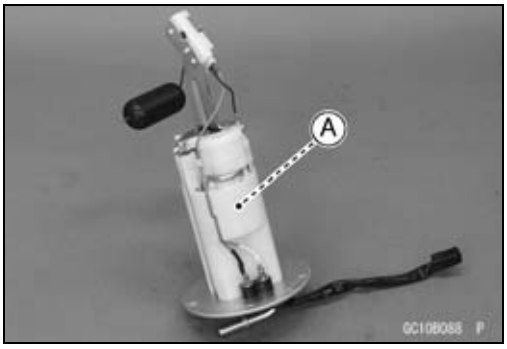

Fuel Filter Cleaning

○The fuel filter [A] is built into the pump and cannot be cleaned or checked.

★If the pump screen or fuel filter is suspected of clogging or being damaged, replace it with the fuel pump as a set.

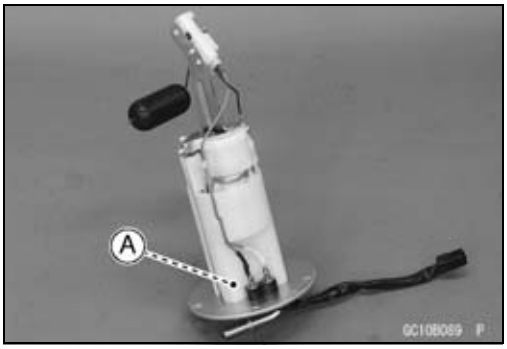

Fuel Pump Circuit

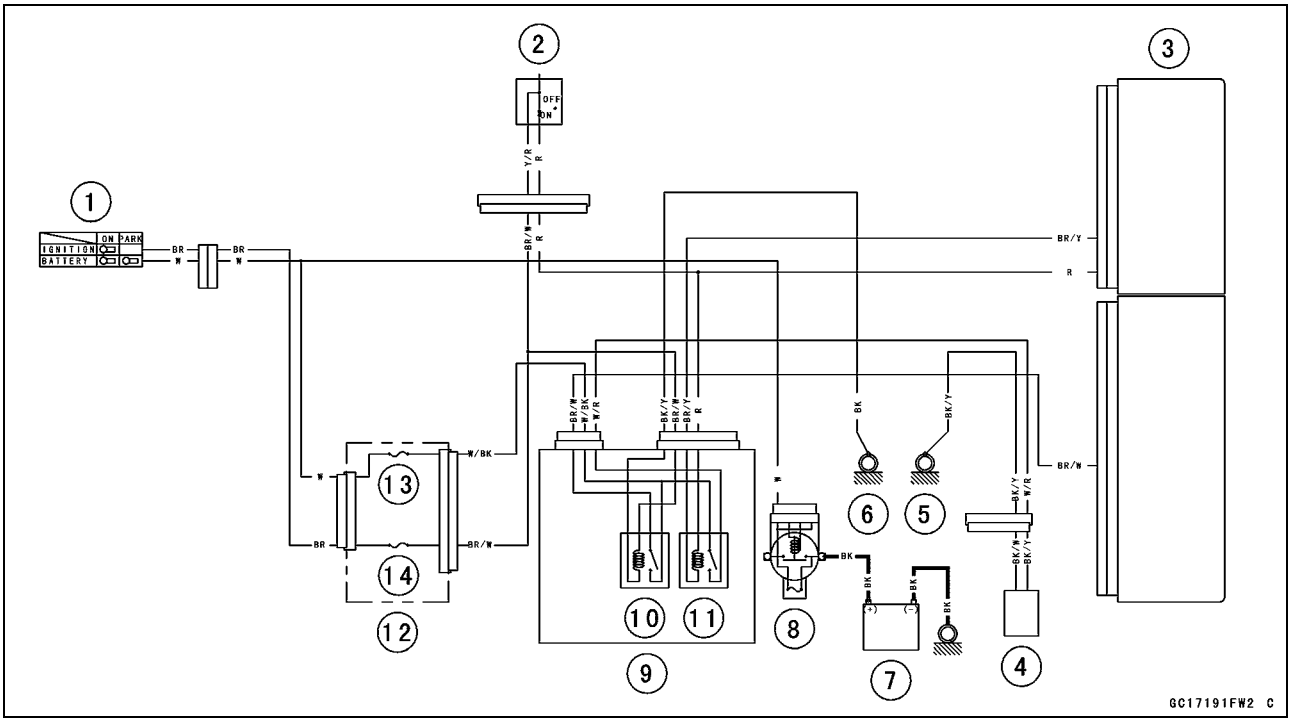

1. Ignition Switch
2. Engine Stop Switch
3. ECU
4. Fuel Pump
5. Frame Ground 1
6. Frame Ground 2
7. Battery 12 V 10 Ah
8. Main Fuse 30 A
9. Relay Box
10. ECU Main Relay
11. Fuel Pump Relay
12. Fuse Box 1
13. FI Fuse 15 A
14. Ignition Fuse 10 A

Fuel Injectors

Fuel Injector Removal/Installation

- Refer to the Throttle Body Assy Disassembly/Assembly.

Fuel Injector Audible Inspection

- Start the engine, and let it to idle.
- Apply the tip of a screwdriver [A] to the fuel injector [B]. Put the grip end onto your ear, and listen whether the fuel injector is clicking or not.

○A sound scope [C] can also be used.

○The click interval becomes shorter as the engine speed rises.

- Do the same for the other fuel injector.

★If all the injectors click at a regular intervals, the injectors are normal.

- Turn the ignition switch to OFF.

★If any fuel injector does not click, check the fuel injector resistance (see Fuel Injector Resistance Inspection).

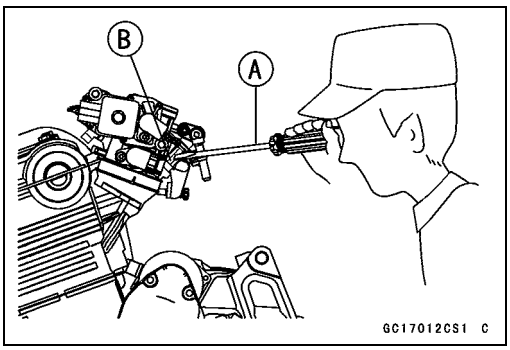

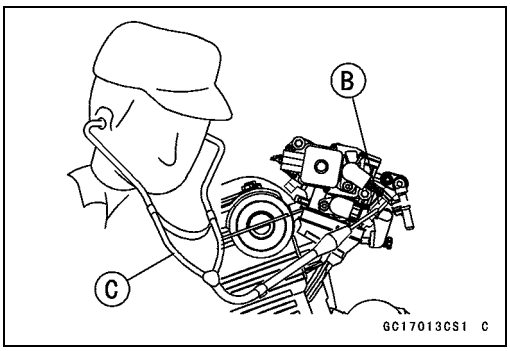

Fuel Injector Resistance Inspection

- Remove:
  Fuel Tank (see Fuel Tank Removal)
  Air Cleaner Housing (see Air Cleaner Housing Removal)
- Disconnect the injector connector [A].
- Connect a digital meter [B] to the injector terminal.
- Measure the fuel injector resistance.

Fuel Injector Resistance
Connections:
For Fuel Injector #1
W/R ⟷ BL/R Terminal
For Fuel Injector #2
W/R ⟷ BL/Y Terminal

Standard: About 11.7 ~ 12.3 Ω at 20°C (68°F)

★If the reading is out of the standard, replace the injector.

★If the reading is within the standard, check the power source voltage (see Fuel Injector Power Source Voltage Inspection).

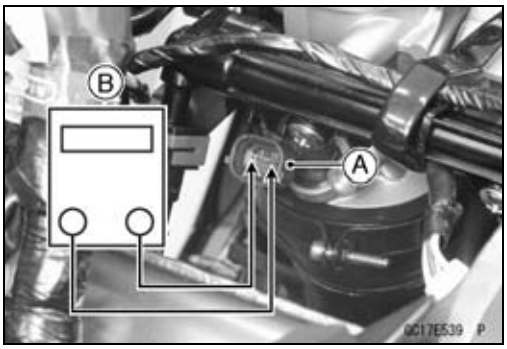

Fuel Injectors

Fuel Injector Power Source Voltage Inspection

NOTE

○*Be sure the battery is fully charged.*

- Turn the ignition switch to OFF.
- Remove the air cleaner housing (see Air Cleaner Housing Removal).
- Disconnect the injector connector and connect the harness adapter [A] between these connectors as shown in the figure.
  Main Harness [B]
  Fuel Injector #1 [C]

Special Tool - Measuring Adapter: 57001-1700

- Connect a digital meter [D] to the harness adapter leads.

Fuel Injector Power Source Voltage
Connections to Adapter:
For Fuel Injector #1, #2
Digital Meter (+) → R (injector W/R) lead
Digital Meter (–) → Battery (–) terminal

- Measure the power source voltage with the engine stopped.
- Turn the engine stop switch to run position.
- Turn the ignition switch to ON.

Power Source Voltage
Standard: Battery Voltage for 3 seconds, and then 0 V

- Turn the ignition switch to OFF.

★If the reading stays on battery voltage and never shows 0 V, check the fuel pump relay (see Relay Circuit Inspection in the Electrical System chapter).
★If the pump relay is normal, check the ECU for its ground and power supply (see ECU Power Supply Inspection).
★If the ground and power supply are good, replace the ECU (see ECU Removal/Installation).
★If there is still no battery voltage, check the ECU main relay and pump relay (see Relay Circuit Inspection in the Electrical System chapter).
★If the main relay and pump relay are normal, check the power source wiring (see wiring diagram in this section).
★If the wiring is good, check the ECU for its ground and power supply (see ECU Power Supply Inspection).
★If the ground and power supply are good, replace the ECU (see ECU Removal/Installation).
★If the reading is in specification, check the output voltage (see Fuel Injector Output Voltage Inspection).

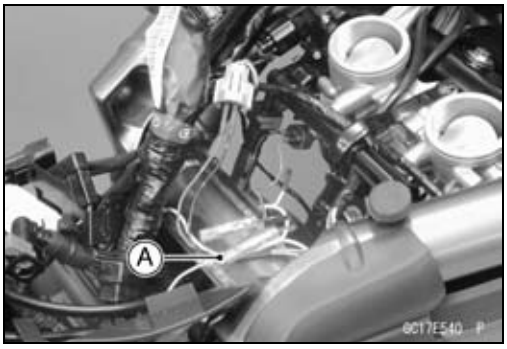

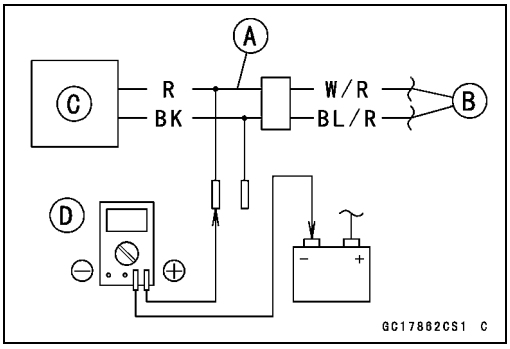

Fuel Injectors

Fuel Injector Output Voltage Inspection

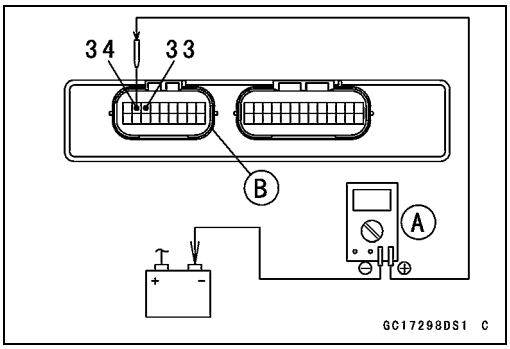

NOTE

○*Be sure the battery is fully charged.*

- Turn the ignition switch to OFF.
- Remove the ECU (see ECU Removal).

○Do not disconnect the ECU connector.

- Connect a digital meter [A] to the connector [B] with the needle adapter set.

Special Tool - Needle Adapter Set: 57001-1457

Fuel Injector Output Voltage
Connections to ECU Connector:
For Fuel Injector #1
Digital Meter (+) → BL/R lead (ECU terminal 34)
Digital Meter (–) → Battery (–) terminal
For Fuel Injector #2
Digital Meter (+) → BL/Y lead (ECU terminal 33)
Digital Meter (–) → Battery (–) terminal

- Measure the output voltage with the engine stopped and with the connector joined.
- Turn the engine stop switch to run position.
- Turn the ignition switch to ON.

Output Voltage
Standard: Battery Voltage for 3 seconds, and then 0 V

- Turn the ignition switch to OFF.

★If the reading is in specification, check the ECU for its ground and power supply (see ECU Power Supply Inspection).
★If the ground and power supply are good, replace the ECU (see ECU Removal/Installation).

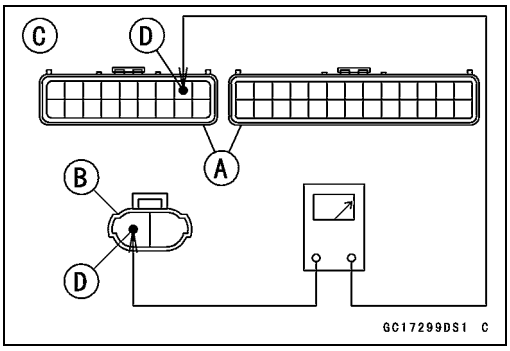

★If the reading is out of the specification, remove the ECU and check the wiring for continuity between main harness connectors.

Special Tool - Hand Tster: 57001-1394

○Disconnect the ECU and injector connectors.

Wiring Continuity Inspection
ECU Connector [A] ←→ Fuel Injector Connector [B]
For Fuel Injector #1 [C]
BL/R lead (ECU terminal 34) [D]
For Fuel Injector #2
BL/Y lead (ECU terminal 33)

★If the wiring is good, check the ECU for its ground and power supply (see ECU Power Supply Inspection).
★If the ground and power supply are good, replace the ECU (see ECU Removal/Installation).

Fuel Injectors

Fuel Injector Fuel Line Inspection

● Remove:
Fuel Tank (see Fuel Tank Removal)
Fuel Hose (see Fuel Hose Replacement in the Periodic Maintenance chapter)

○Be sure to place a piece of cloth around the fuel supply pipes of the fuel pump and the throttle body assy.

⚠ WARNING

Fuel is flammable and explosive under certain conditions and can cause severe burns. Be prepared for fuel spillage; any spilled fuel must be completely wiped up immediately. When the fuel hose is disconnected, fuel spills out from the hose and the pipe because of residual pressure. Cover the hose connection with a piece of clean cloth to prevent fuel spillage.

● Check the injector fuel line for leakage as follows.

○Connect a commercially available vacuum/pressure pump [A] to the nipple of the delivery pipe [B] with a high-pressure fuel hose [C] (both ends connected with the clamps [D]) as shown.

Torque - Fuel Hose Clamp Screws: 1.5 N·m (0.15 kgf·m, 13 in·lb)

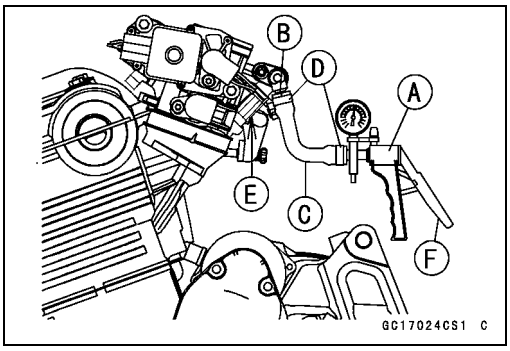

○Apply soap and water solution to the areas [E] as shown.

○Watching the pressure gauge, squeeze the pump lever [F], and build up the pressure until the pressure reaches the maximum pressure.

Injector Fuel Line Maximum Pressure
Standard: 294 kPa (3.0 kgf/cm², 43 psi)

NOTICE

During pressure testing, do not exceed the maximum pressure for which the system is designed.

○Watch the gauge for at least 6 seconds.

★If the pressure holds steady, the fuel line is good.

★If the pressure drops at once or if bubbles are found in the area, the fuel line is leaking. Replace the fuel supply pipe assy, injectors and related parts.

○Repeat the leak test, and check the fuel line for no leakage.

● Install:
Fuel Hose (see Fuel Hose Replacement in the Periodic Maintenance chapter)
Fuel Tank (see Fuel Tank Installation)

● Start the engine and check for fuel leakage.

Fuel Injectors

Fuel Injector Circuit

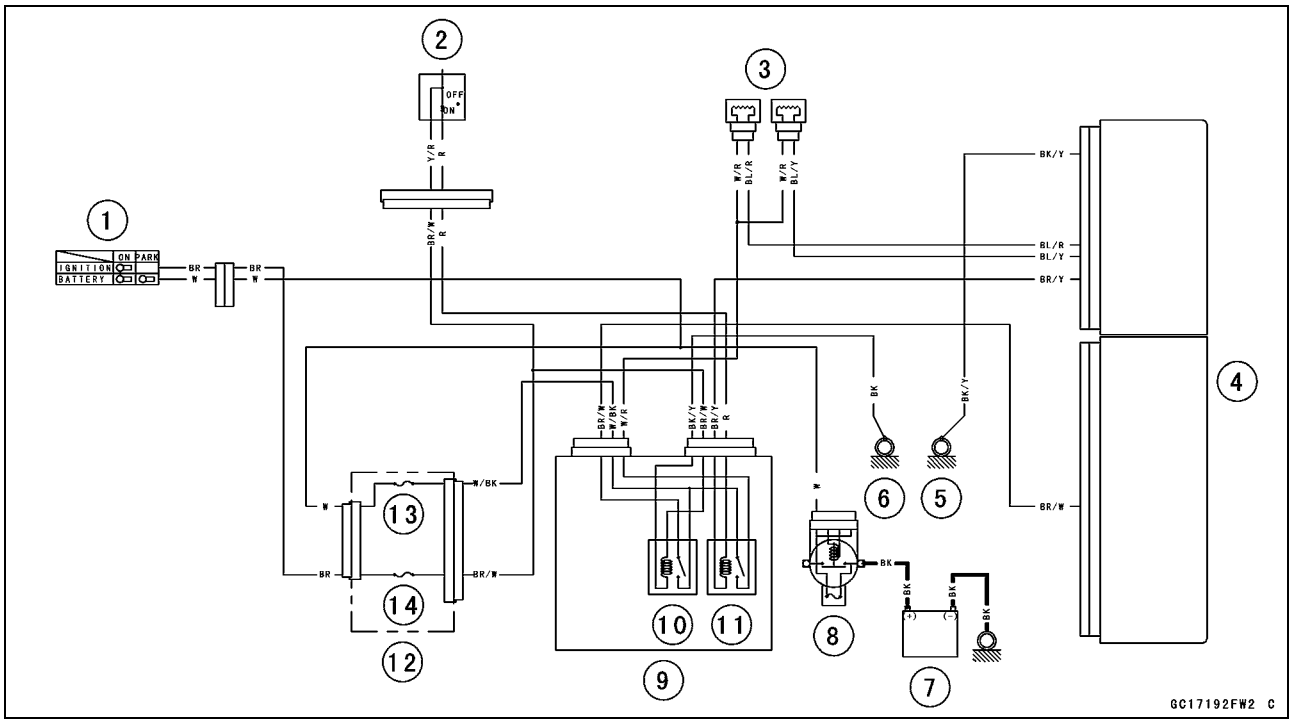

1. Ignition Switch
2. Engine Stop Switch
3. Fuel Injectors
4. ECU
5. Frame Ground 1
6. Frame Ground 2
7. Battery 12 V 10 Ah
8. Main Fuse 30 A
9. Relay Box
10. ECU Main Relay
11. Fuel Pump Relay
12. Fuse Box 1
13. FI Fuse 15 A
14. Ignition Fuse 10 A

Throttle Grip and Cables

Throttle Grip Free Play Inspection

- Refer to the Throttle Control System Inspection in the Periodic Maintenance chapter.

Throttle Grip Free Play Adjustment

- Refer to the Throttle Control System Inspection in the Periodic Maintenance chapter.

Throttle Cable Installation

- Install the throttle cables in accordance with Cable, Wire, and Hose Routing section in the Appendix chapter.
- Install the lower ends of the throttle cables in the throttle pulley on the throttle body assy after installing the upper ends of the throttle cables in the grip.
- After installation, adjust each cable properly (see Throttle Control System Inspection in the Periodic Maintenance chapter).

⚠ WARNING

Operation with incorrectly routed or improperly adjusted cables could result in an unsafe riding condition. Be sure the cables are routed correctly and properly adjusted.

Throttle Cable Lubrication

- Refer to the Chassis Parts Lubrication in the Periodic Maintenance chapter.

Throttle Body Assy

Idle Speed Inspection/Adjustment

- Refer to the Idle Speed Inspection/Adjustment in the Periodic Maintenance chapter.

Synchronization Inspection/Adjustment

- Refer to the Engine Vacuum Synchronization Inspection in the Periodic Maintenance chapter.

Throttle Body Assy Removal

⚠ WARNING

Gasoline is extremely flammable and can be explosive under certain conditions, creating the potential for serious burns. Make sure the area is well-ventilated and free from any source of flame or sparks; this includes any appliance with a pilot light. Do not smoke. Turn the ignition switch to OFF. Disconnect the battery (–) terminal. To avoid fuel spills, draw it from the tank when the engine is cold. Be prepared for fuel spillage; any spilled fuel must be completely wiped up immediately.

NOTICE

Never drop the throttle body assy especially on a hard surface. Such a shock to the body assy can damage it.

- Remove:
  Fuel Tank (see Fuel Tank Removal)
  Air Cleaner Housing (see Air Cleaner Housing Removal)
  Fuel Hose (see Fuel Hose Replacement in the Periodic Maintenance chapter)
- Open the clamps [A].
- Disconnect the connectors [B].

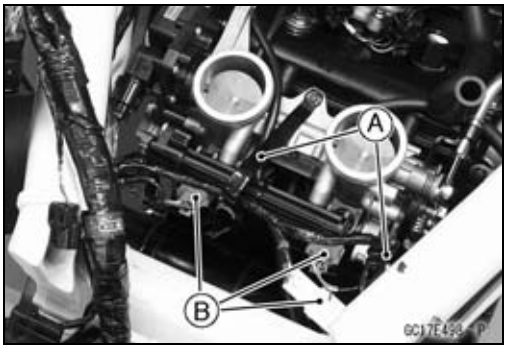

- Remove:
  Main Throttle Sensor Connector [A] (Disconnect)
  Vacuum Hose [B]
- Loosen the throttle body assy holder clamp bolts [C].

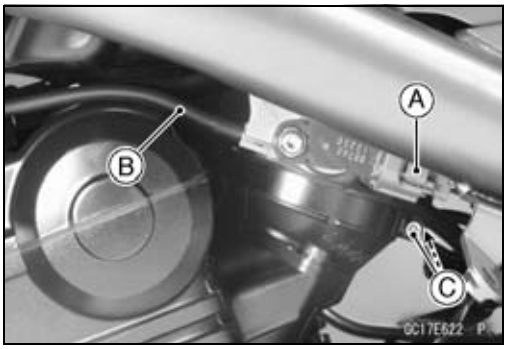

Throttle Body Assy

- Pull the throttle body assy [A] out of the holder.
- Disconnect the subthrottle sensor connector [B].

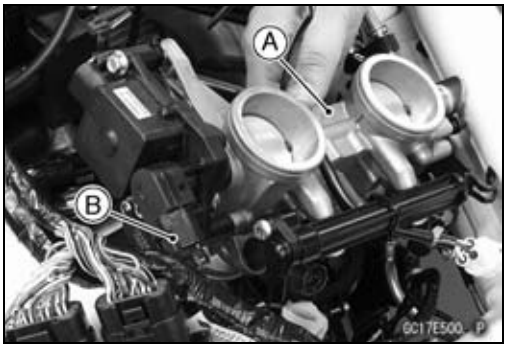

- Loosen the locknut [A] and screw the adjuster [B] to give the throttle grip plenty of play.
- Remove the clamp [C].
- Pull the throttle cables out of the cable holders [D].
- Free the throttle cable lower ends [E] from the throttle pulley.
- After removing the throttle body assy, stuff pieces of lint -free, clean cloths into the throttle body assy holders.

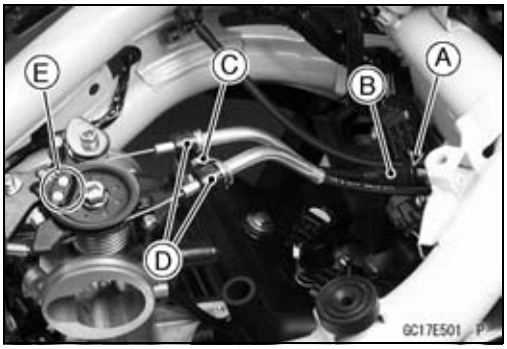

NOTICE

If dirt gets into the engine, excessive engine wear and possible engine damage will occur.

Throttle Body Assy Installation

- Apply a thin coat of grease to the throttle cable lower ends.
- Fit the accelerator cable end [A] and the decelerator cable end [B] into the throttle pulley.
- Install the clamp [C] securely.

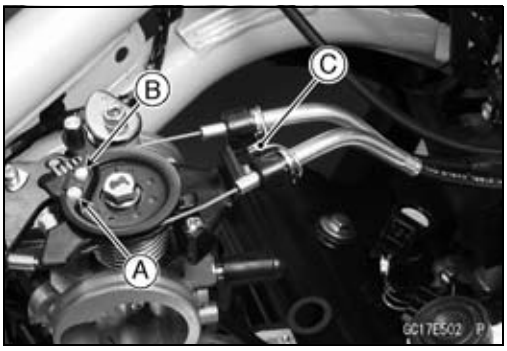

Throttle Body Assy

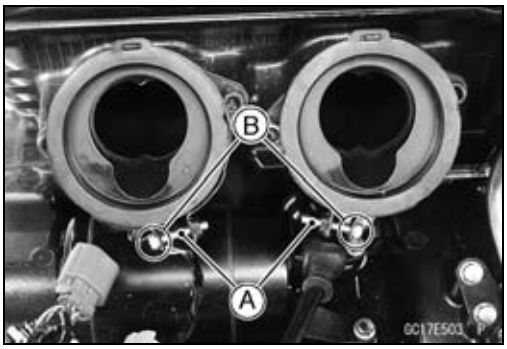

- Install the throttle body assy holder clamp bolts [A] so that their bolt heads [B] face outward.
- Install the throttle body assy onto the holder securely.
- Tighten:

  Torque - Throttle Body Assy Holder Clamp Bolts: 2.0 N·m (0.20 kgf·m, 18 in·lb)

- Turn the throttle grip to make sure that the throttle valves move smoothly and return by spring force.
- Check the throttle body assy for fuel leakage.

⚠ WARNING

Fuel spilled from the throttle body assy is hazardous.

- Run the leads and hoses correctly (see Cable, Wire, and Hose Routing section in the Appendix chapter).
- Install the other removed parts (see appropriate chapters).
- Adjust:
  Throttle Grip Free Play (see Throttle Control System Inspection in the Periodic Maintenance chapter)
  Idle Speed (see Idle Speed Adjustment in the Periodic Maintenance chapter)

⚠ WARNING

Operation with incorrectly routed or improperly adjusted cables could result in an unsafe riding condition. Be sure the cables are routed correctly and properly adjusted.

Throttle Body Assy Disassembly

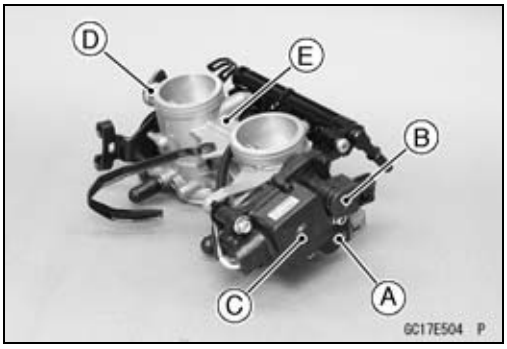

NOTICE

Do not remove, disassemble or adjust the main throttle sensor [A], subthrottle sensor [B], subthrottle valve actuator [C], throttle link mechanism [D] and throttle body assy [E], because they are adjusted or set at the manufacturer. Adjustment of these parts could result in poor performance, requiring replacement of the throttle body assy.

NOTICE

Never drop the throttle body assy , especially on a hard surface. Such a shock to the body assy can damage it.

Throttle Body Assy

- Remove:
  Throttle Body Assy (see Throttle Body Assy Removal)
  Screws [A]
- Pull out the fuel injectors [B] from the throttle body assy together with the delivery pipe [C].
- Pull out the fuel injectors from the delivery pipe.

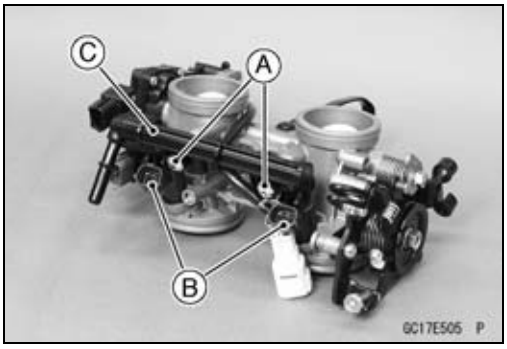

Throttle Body Assy Assembly

- Replace the O-rings [A] and seals [B] with new ones.
- Before assembling, blow away dirt or dust from the throttle body and delivery pipe by applying compressed air.
- Apply engine oil to the new O-rings of each injector [C], insert them into the delivery pipe and confirm whether the injectors turn smoothly or not.
- Install the injectors along with the delivery pipe assy into the throttle body.
- Install the throttle body assy (see Throttle Body Assy Installation).

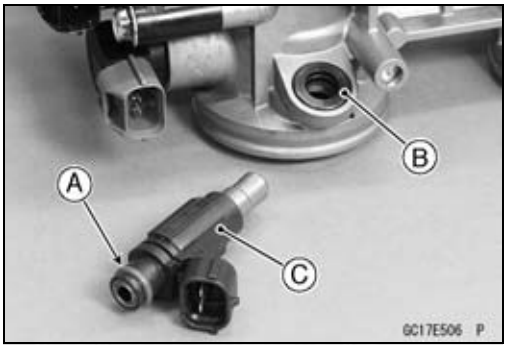

Air Cleaner

Air Cleaner Element Removal/Installation

- Refer to the Air Cleaner Element Replacement in the Periodic Maintenance chapter.

Air Cleaner Element Inspection

- Remove the air cleaner element (see Air Cleaner Element Replacement in the Periodic Maintenance chapter).
- Visually inspect the element [A] for tears or breaks.

★If the element has any tears or breaks, replace it with a new one.

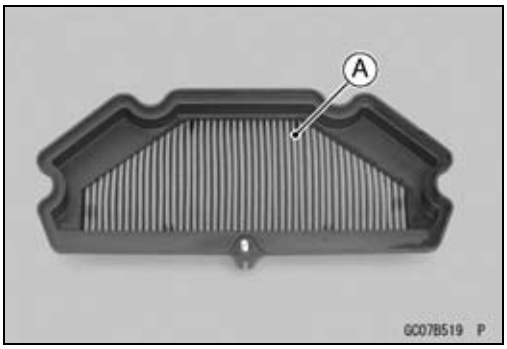

Air Cleaner Oil Draining

A drain hose [A] is connected to the bottom of the air cleaner to drain water or oil accumulated in the cleaner part.

- Visually inspect the drain hose for accumulation of water or oil.

★If any water or oil accumulates in the hose, remove the plug [B] from the drain hose and drain it.

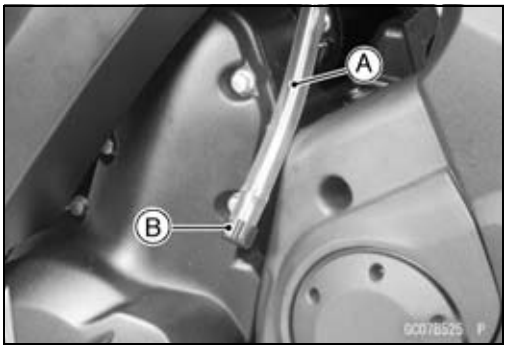

⚠ WARNING

Oil on tires will make them slippery and can cause an accident and injury. Be sure to reinstall the plug in the drain hose after draining.

Air Cleaner Housing Removal

- Remove:
  Fuel Tank (see Fuel Tank Removal)
  Air Cleaner Housing Cover (see Air Cleaner Element Replacement in the Periodic Maintenance chapter)
  Left Middle Fairing (see Middle Fairing Removal in the Frame chapter)
  Left Side Cover (see Side Cover Removal in the Frame chapter)
- Disconnect the breather hose [A] on the upper crankcase.

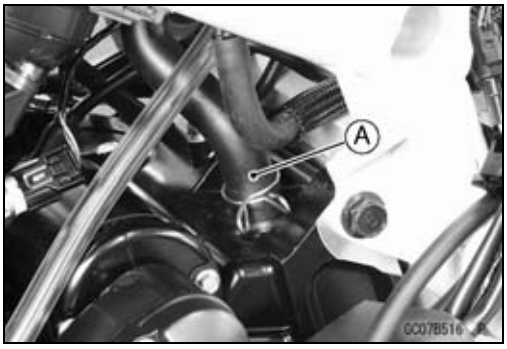

- Loosen the air cleaner housing clamp bolt [A].

Air Cleaner

- Pull out the air cleaner housing [A] from the throttle body assy.
- Disconnect the air switching valve hose [B] from the housing.

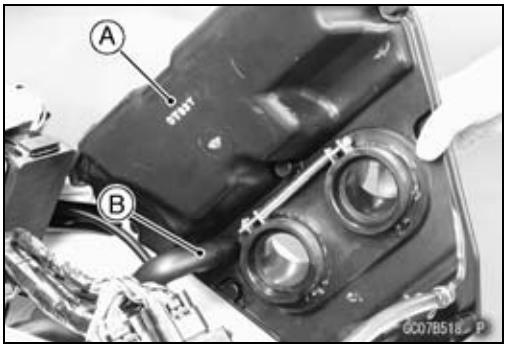

Air Cleaner Housing Installation

- Installation is the reverse of removal.

○Install the air cleaner housing onto the throttle body assy securely and tighten the clamp bolt.

Torque - Air Cleaner Housing Clamp Bolt: 2.0 N·m (0.20 kgf·m, 18 in·lb)

○Run the hoses correctly (see Cable, Wire, and Hose Routing section in the Appendix chapter).

Fuel Tank

Fuel Tank Removal

⚠ WARNING

Gasoline is extremely flammable and can be explosive under certain conditions, creating the potential for serious burns. Make sure the area is well-ventilated and free from any source of flame or sparks; this includes any appliance with a pilot light. Do not smoke. Turn the ignition switch to OFF. Disconnect the battery (–) terminal. To avoid fuel spills, draw it from the tank when the engine is cold. Be prepared for fuel spillage; any spilled fuel must be completely wiped up immediately.

- Turn the ignition switch to OFF and the engine stop switch to stop position.
- Wait until the engine cools down.
- Disconnect the battery (–) terminal (see Battery Removal in the Electrical System chapter).
- Open the fuel tank cap [A] to lower the pressure in the tank.

○During tank removal, keep the tank cap open to release pressure in the tank. This makes fuel spillage less.

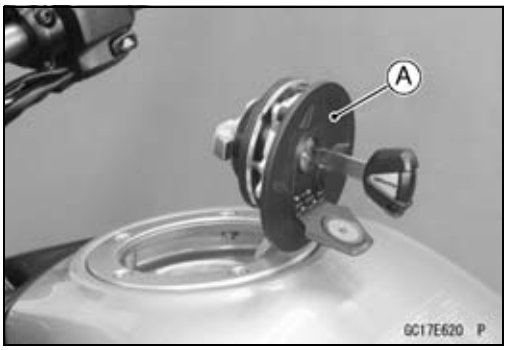

- Remove:
  Front Seat (see Front Seat Removal in the Frame chapter)
  Fuel Drain Hose [A]
  Fuel Tank Breather Hose [B]
  Fuel Tank Bolt [C] and Washer

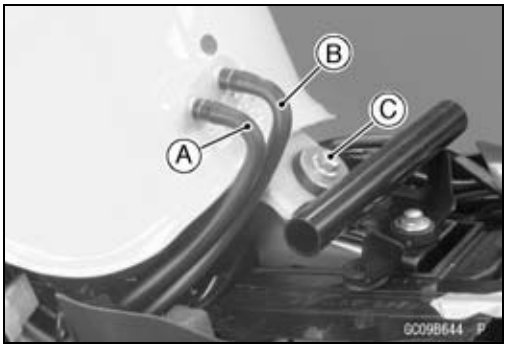

- Remove:
  Ignition Switch Cover [A]
  Bolts [B] and Collars (Left and Right)
  Fuel Tank Cover [C]

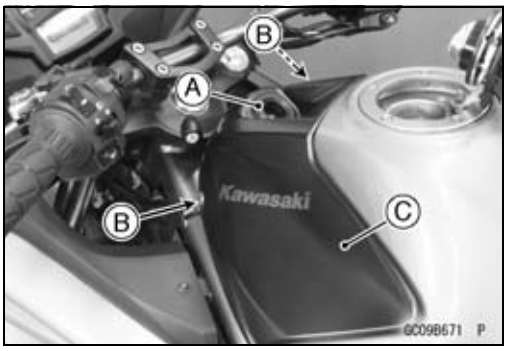

Fuel Tank

- Remove the fuel tank bolts [A] and washers.

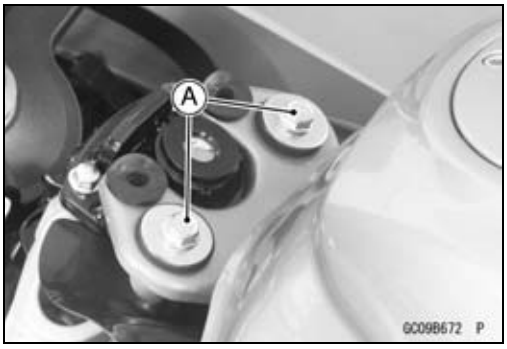

- Draw the fuel out from the fuel tank with a commercially available pump [A].
  - ○Use a soft plastic hose [B] as a pump intake hose in order to insert the hose smoothly.
  - ○Put the hose through the fill opening [C] into the tank and draw the fuel out.
    Front [D]

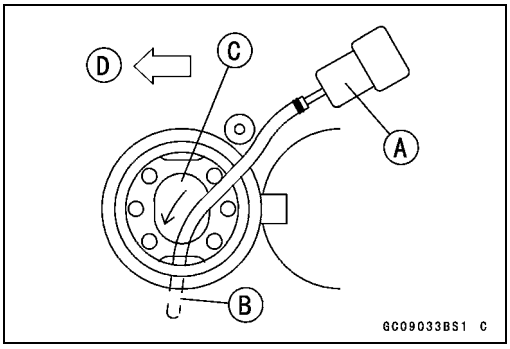

⚠ WARNING

Spilled fuel is flammable and can be explosive under certain conditions. The fuel can not be removed completely from the fuel tank. Be careful for remained fuel spillage.

- Remove the left frame cover (see Frame Cover Removal in the Frame chapter).
- Pull out the fuel pump lead connector [A] from the bracket and disconnect it.

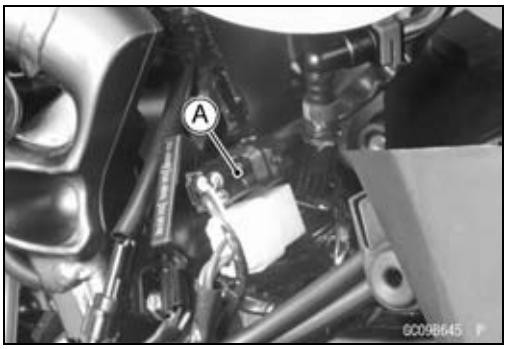

- Be sure to place a piece of cloth [A] around the fuel hose joint.
- Insert a standard tip screwdriver [B] into the slit on the joint lock [C].

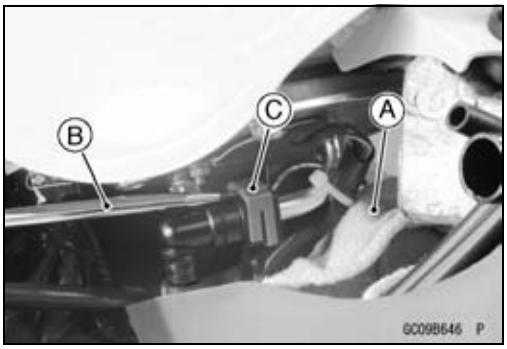

Fuel Tank

- Turn the driver [A] to disconnect the joint lock [B].
- Pull the fuel hose joint [C] out of the outlet pipe [D].

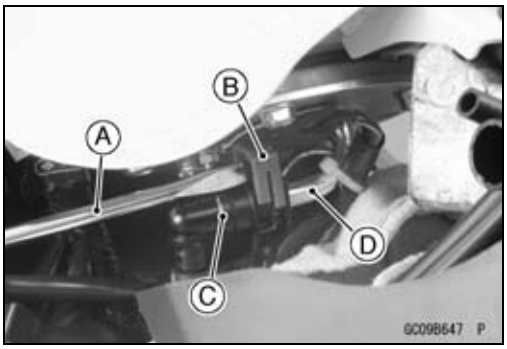

⚠ WARNING

Fuel is flammable and explosive under certain conditions and can cause severe burns. Be prepared for fuel spillage; any spilled fuel must be completely wiped up immediately. When the fuel hose is disconnected, fuel spills out from the hose and the pipe because of residual pressure. Cover the hose connection with a piece of clean cloth to prevent fuel spillage.

- Close the fuel tank cap.
- Remove the fuel tank [A], and place it on plank [B].

○Do not apply the load to the fuel outlet pipe [C] of the fuel pump.

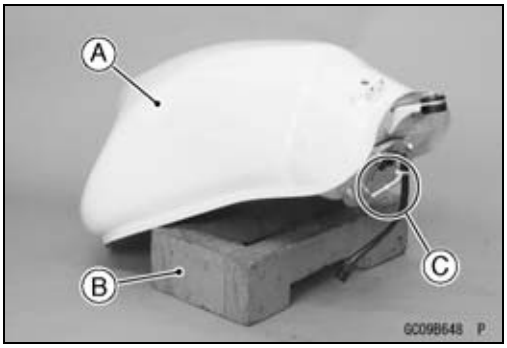

Fuel Tank Installation

- Note the above WARNING (see Fuel Tank Removal).
- Check that the rubber dampers [A] are on the frame and the fuel tank.

★If the dampers are damaged or deteriorated, replace them with new ones.

- Insert the fuel hose joint [A] straight onto the outlet pipe until the hose joint clicks.

NOTICE

When installing the fuel hose joint, do not apply strong force to the outlet pipe on the fuel pump. The pipe made from resin could be damaged.

- Push the joint lock [B] until it clicks.

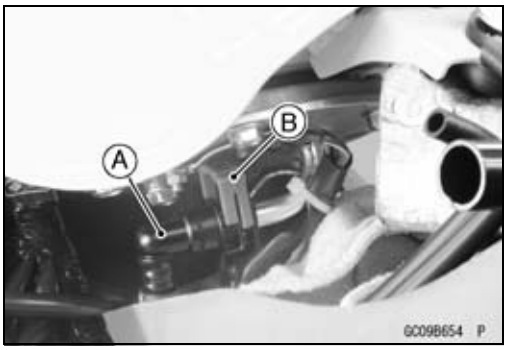

- Push and pull [A] the hose joint [B] back and forth more than 2 times and make sure it is locked and does not come off.

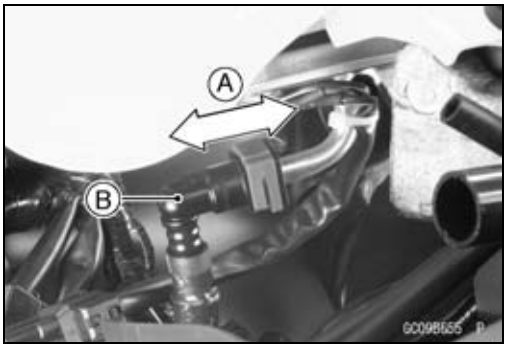

⚠ WARNING

Leaking fuel can cause a fire or explosion resulting in serious burns. Make sure the hose joint is installed correctly on the delivery pipe by sliding the joint.

★If it comes off, reinstall the hose joint.
- Connect the fuel pump lead connector and the battery (–) cable terminal.

- Install the other removed parts (see appropriate chapters).

○Install the fuel tank cover [A] so that the projections [B] fit into the grommets [C].
○Run the hose and lead correctly (see Cable, Wire, and Hose Routing section in the Appendix chapter).

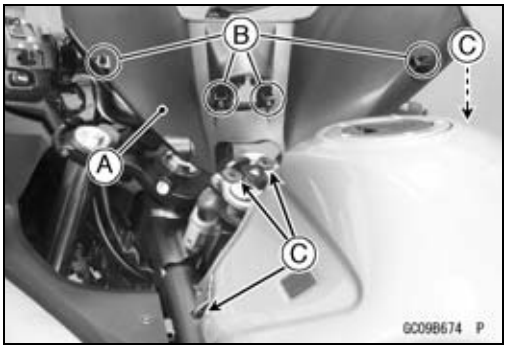

Fuel Tank and Cap Inspection

- Visually inspect the gasket [A] on the tank cap for any damage.

★Replace the gasket if it is damaged.
- Check to see if the water drain pipe [B] and fuel breather pipe [C] in the tank is not clogged. Check the tank cap breather also.

★If they are clogged, remove the tank and drain it, and then blow the breather free with compressed air.

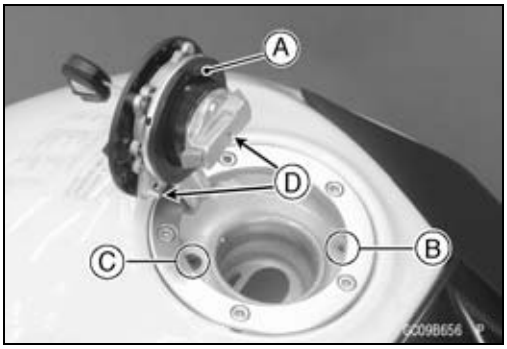

NOTICE

Do not apply compressed air to the air vent holes [D] in the tank cap. This could cause damage and clogging of the labyrinth in the cap.

Fuel Tank

Fuel Tank Cleaning

⚠ WARNING

Gasoline and low flash-point solvents can be flammable and/or explosive and cause severe burns. Clean the tank in a well-ventilated area, and take care that there are no sparks or flame anywhere near the working area. Do not use gasoline or low flash-point solvents to clean the tank.

- Remove:
  Fuel Tank (see Fuel Tank Removal)
  Fuel Pump (see Fuel Pump Removal)
- Pour some high flash-point solvent into the fuel tank and shake the tank to remove dirt and fuel deposits.
- Draw the solvent out of the fuel tank.
- Dry the tank with compressed air.
- Install:
  Fuel Pump (see Fuel Pump Installation)
  Fuel Tank (see Fuel Tank Installation)

Evaporative Emission Control System (CAL, SEA-B1 and TH Models)

The Evaporative Emission Control System routes fuel vapors from the fuel system into the running engine or stores the vapors in a canister when the engine is stopped. Although no adjustments are required, a thorough visual inspection must be made at the intervals specified by the Periodic Maintenance Chart.

Parts Removal/Installation

⚠ WARNING

Gasoline is extremely flammable and can be explosive under certain conditions. Turn the ignition switch to OFF. Do not smoke. Make sure the area is well-ventilated and free from any source of flame or sparks; this includes any appliance with a pilot light.

NOTICE

If gasoline, solvent, water or any other liquid enters the canister, the canister's vapor absorbing capacity is greatly reduced. If the canister does become contaminated, replace it with a new one.

- Connect the hoses according to the diagram of the system (see Cable, Wire, and Hose Routing section in the Appendix chapter). Make sure they do not get pinched or kinked.

Hose Inspection

- Refer to the Evaporative Emission Control System Inspection in the Periodic Maintenance chapter.

Purge Valve Inspection

- Refer to the Purge Valve Inspection.

Canister Inspection

- Refer to the Evaporative Emission Control System Inspection in the Periodic Maintenance chapter.

Cooling System

Table of Contents

Exploded View 4-2
Coolant Flow Chart 4-4
Specifications 4-6
Special Tools 4-7
Coolant 4-8
- Coolant Deterioration Inspection 4-8
- Coolant Level Inspection 4-8
- Coolant Draining 4-8
- Coolant Filling 4-8
- Pressure Testing 4-8
- Cooling System Flushing 4-9
- Coolant Reserve Tank Removal/Installation 4-9

Water Pump 4-10
- Water Pump Removal 4-10
- Water Pump Installation 4-10
- Water Pump Inspection 4-11
- Mechanical Seal Inspection 4-11
- Water Pump Housing Disassembly 4-12
- Water Pump Housing Assembly 4-12
- Impeller Assembly 4-12
- Pump Impeller Inspection 4-12

Radiator 4-13
- Radiator and Radiator Fan Removal 4-13
- Radiator and Radiator Fan Installation 4-14
- Radiator Inspection 4-15
- Radiator Cap Inspection 4-15
- Radiator Filler Neck Inspection 4-16

Thermostat 4-17
- Thermostat Removal 4-17
- Thermostat Installation 4-17
- Thermostat Inspection 4-18

Hose and Pipes 4-19
- Hose Installation 4-19
- Hose Inspection 4-19

Water Temperature Sensor 4-20
- Water Temperature Sensor Removal/Installation 4-20
- Water Temperature Sensor Inspection 4-20

Exploded View

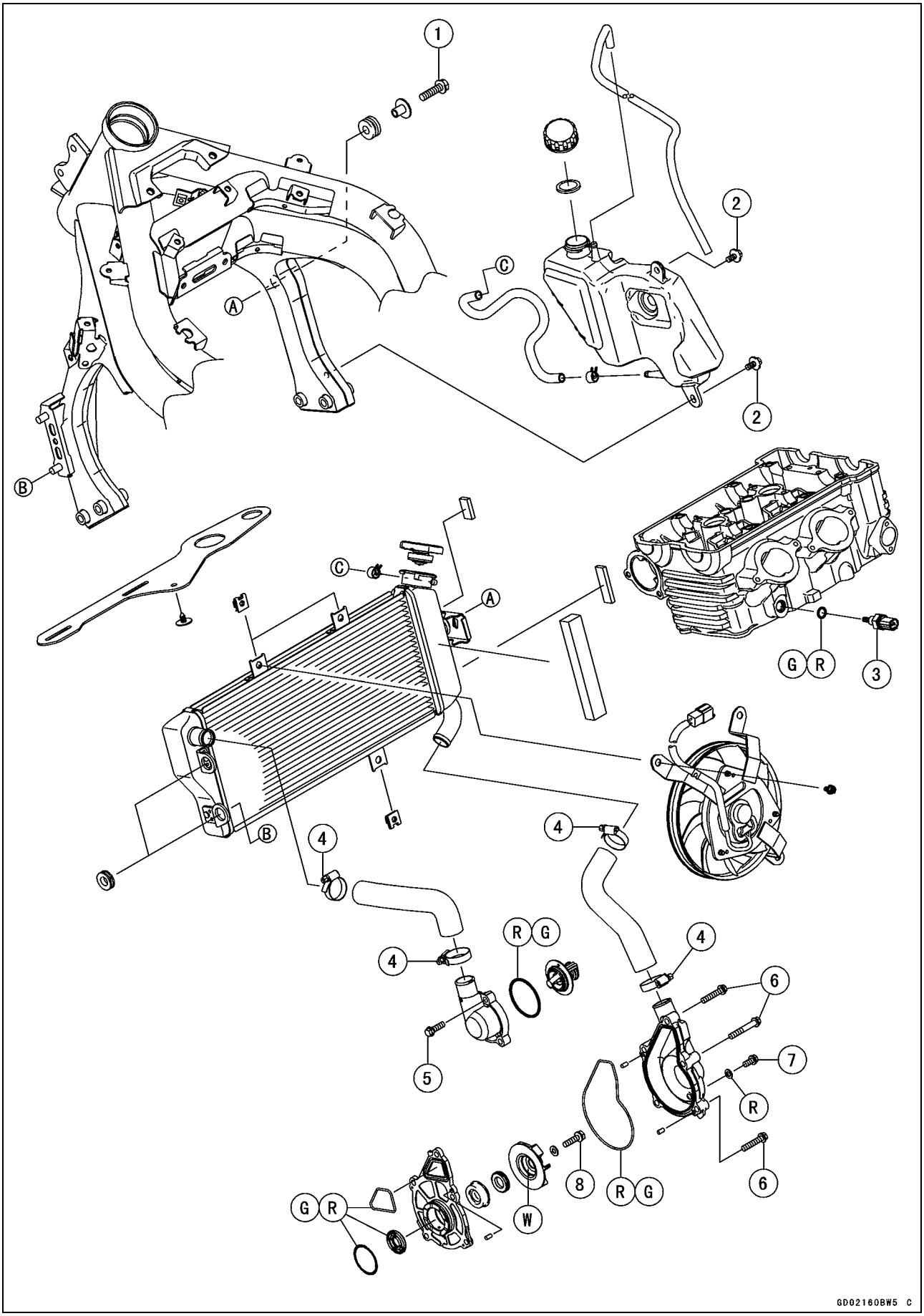

Exploded View

No.	Fastener	Torque			Remarks
		N·m	kgf·m	ft·lb	
1	Radiator Bolt	7.9	0.81	70 in·lb	
2	Coolant Reserve Tank Mounting Bolts	7.9	0.81	70 in·lb	
3	Water Temperature Sensor	12	1.2	106 in·lb	
4	Water Hose Clamp Screws	3.0	0.31	27 in·lb	
5	Thermostat Housing Bolts	9.8	1.0	87 in·lb	
6	Water Pump Cover Bolts	9.8	1.0	87 in·lb	
7	Water Pump Drain Bolt	9.8	1.0	87 in·lb	
8	Water Pump Impeller Bolt	9.8	1.0	87 in·lb	

G: Apply grease.
R: Replacement Parts
W: Apply water.

Coolant Flow Chart

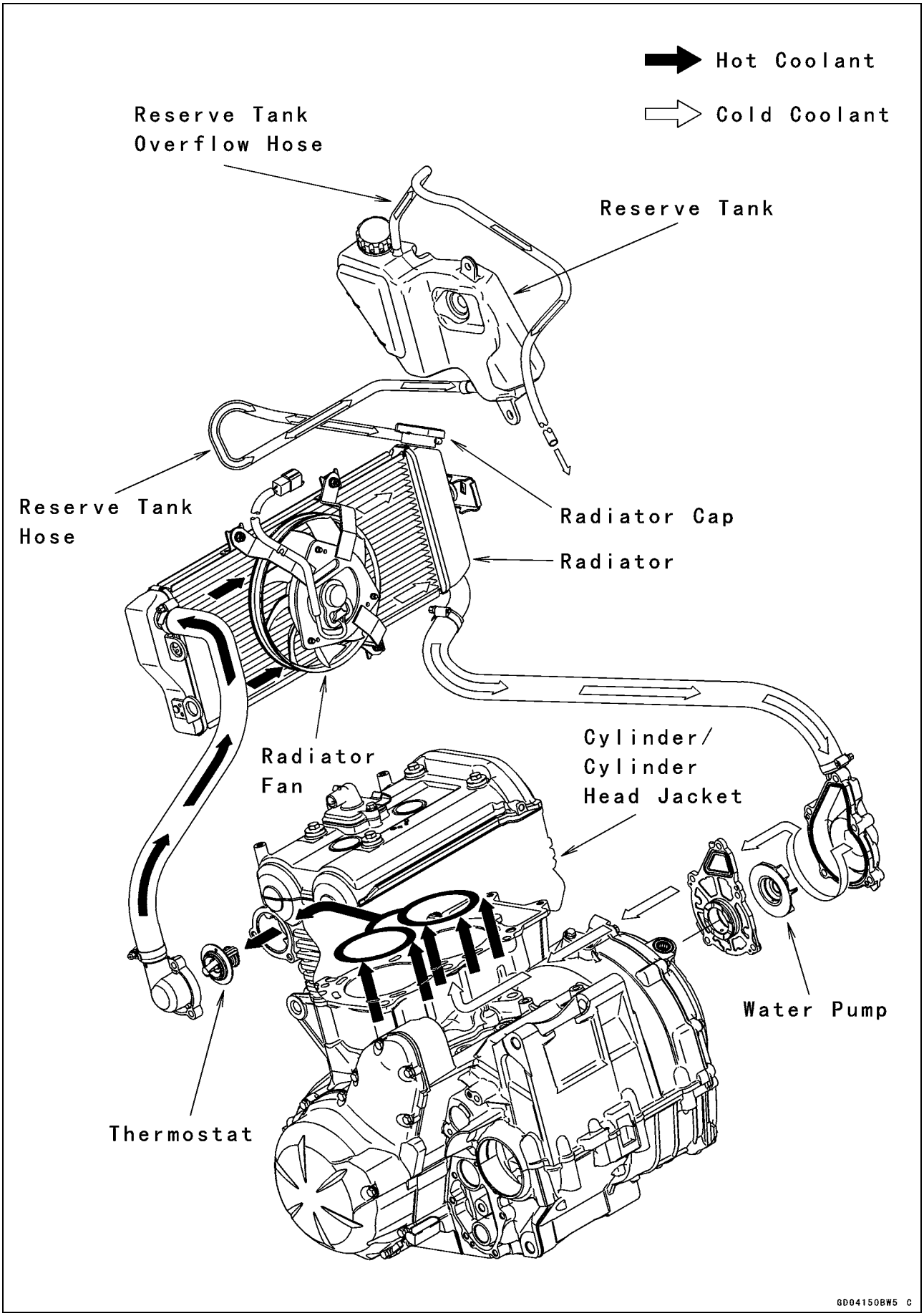

Coolant Flow Chart

Permanent type antifreeze is used as a coolant to protect the cooling system from rust and corrosion. When the engine starts, the water pump turns and the coolant circulates.

The thermostat is a wax pellet type which opens or closes with coolant temperature changes. The thermostat continuously changes its valve opening to keep the coolant temperature at the proper level. When coolant temperature is below 80.5 ~ 83.5°C (177 ~ 182°F), the thermostat closes so that the coolant flow is restricted through the air bleeder hole, causing the engine to warm up more quickly. When coolant temperature is more than 80.5 ~ 83.5°C, the thermostat opens and the coolant flows.

When the coolant temperature goes up beyond 104°C (219°F), the radiator fan relay conducts to operate the radiator fan. The radiator fan draws air through the radiator core when there is not sufficient air flow such as at low speeds. This increases up the cooling action of the radiator. When the temperature is below 99°C (210°F), the fan relay opens and the radiator fan stops.

In this way, this system controls the engine temperature within narrow limits where the engine operates most efficiently even if the engine load varies.

The system is pressurized by the radiator cap to suppress boiling and the resultant air bubbles which can cause engine overheating. As the engine warms up, the coolant in the radiator and the water jacket expands. The excess coolant flows through the radiator cap and hose to the reserve tank to be stored there temporarily. Conversely, as the engine cools down, the coolant in the radiator and the water jacket contracts, and the stored coolant flows back to the radiator from the reserve tank.

The radiator cap has two valves. One is a pressure valve which holds the pressure in the system when the engine is running. When the pressure exceeds 112.3 ~ 141.7 kPa (1.15 ~ 1.45 kgf/cm², 16.3 ~ 20.6 psi), the pressure valve opens and releases the pressure to the reserve tank. As soon as pressure escapes, the valve closes, and keeps the pressure at 112.3 ~ 141.7 kPa (1.15 ~ 1.45 kgf/cm², 16.3 ~ 20.6 psi). When the engine cools down, another small valve (vacuum valve) in the cap opens. As the coolant cools, the coolant contracts to form a vacuum in the system. The vacuum valve opens and allows the coolant from the reserve tank to enter the radiator.

Specifications

Item	Standard
Coolant Provided when Shipping	
Type (Recommended)	Permanent type of antifreeze (soft water and ethylene glycol plus corrosion and rust inhibitor chemicals for aluminum engines and radiators)
Color	Green
Mixed Ratio	Soft water 50%, coolant 50%
Freezing Point	−35°C (−31°F)
Total Amount	1.2 L (1.3 US qt) (reserve tank full level, including radiator and engine)
Radiator Cap	
Relief Pressure	112.3 ~ 141.7 kPa (1.15 ~ 1.45 kgf/cm², 16.3 ~ 20.6 psi)
Thermostat	
Valve Opening Temperature	80.5 ~ 83.5°C (177 ~ 182°F)
Valve Full Opening Lift	8 mm (0.31 in.) or more at 95°C (203°F)

Special Tools

Bearing Driver Set:
57001-1129

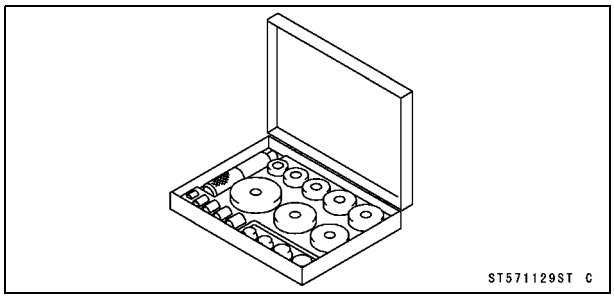

Oil Seal Driver:
57001-1660

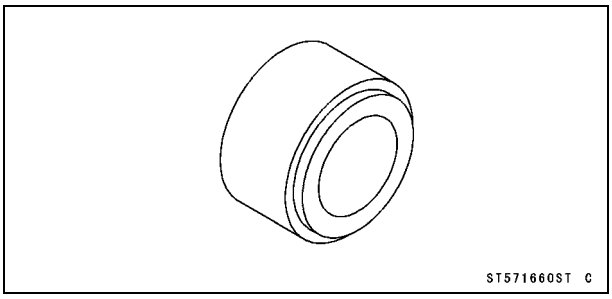

Coolant

Coolant Deterioration Inspection

- Remove the right middle fairing (see Middle Fairing Removal in the Frame chapter).
- Visually inspect the coolant [A] in the reserve tank.

★If whitish cotton-like wafts are observed, aluminum parts in the cooling system are corroded. If the coolant is brown, iron or steel parts are rusting. In either case, flush the cooling system.

★If the coolant gives off an abnormal smell, check for a cooling system leak. It may be caused by exhaust gas leaking into the cooling system.

Coolant Level Inspection

- Refer to the Coolant Level Inspection in the Periodic Maintenance chapter.

Coolant Draining

- Refer to the Coolant Change in the Periodic Maintenance chapter.

Coolant Filling

- Refer to the Coolant Change in the Periodic Maintenance chapter.

Pressure Testing

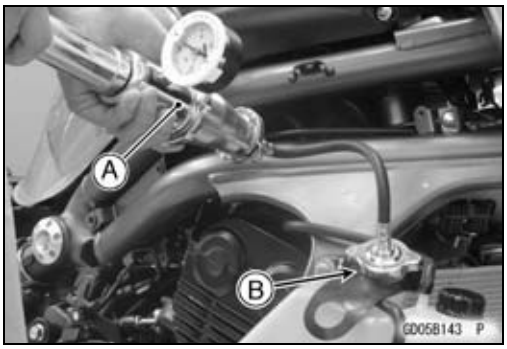

- Remove the radiator cap (see Coolant Change in the Periodic Maintenance chapter), and install a cooling system pressure tester [A] on the filler neck [B].

NOTE

○*Wet the cap sealing surfaces with water or coolant to prevent pressure leaks.*

- Build up pressure in the system carefully until the pressure reaches 141.7 kPa (1.45 kgf/cm², 20.6 psi).

NOTICE

During pressure testing, do not exceed the pressure for which the system is designed. The maximum pressure is 141.7 kPa (1.45 kgf/cm², 20.6 psi).

- Watch the gauge for at least 6 seconds.

★If the pressure holds steady, the system is all right.

★If the pressure drops and no external source is found, check for internal leaks. Droplets in the engine oil indicate internal leakage. Check the cylinder head gasket and the water pump.

- Remove the pressure tester, replenish the coolant, and install the radiator cap.

Coolant

Cooling System Flushing

Over a period of time, the cooling system accumulates rust, scale, and lime in the water jacket and radiator. When this accumulation is suspected or observed, flush the cooling system. If this accumulation is not removed, it will clog up the water passage and considerable reduce the efficiency of the cooling system.

- Drain the cooling system (see Coolant Change in the Periodic Maintenance chapter).
- Fill the cooling system with fresh water mixed with a flushing compound.

NOTICE

Do not use a flushing compound which is harmful to the aluminum engine and radiator. Carefully follow the instructions supplied by the manufacturer of the cleaning product.

- Warm up the engine, and run it at normal operating temperature for about ten minutes.
- Stop the engine, and drain the cooling system.
- Fill the system with fresh water.
- Warm up the engine and drain the system.
- Repeat the previous two steps once more.
- Fill the system with a permanent type coolant and bleed the air from the system (see Coolant Change in the Periodic Maintenance chapter).

Coolant Reserve Tank Removal/Installation

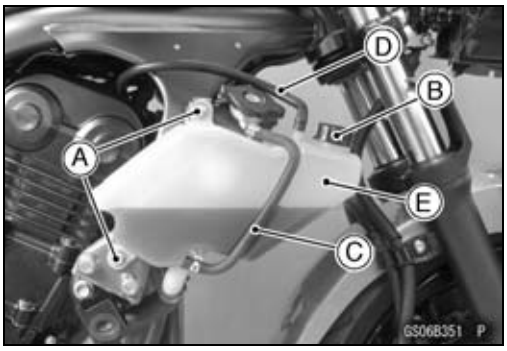

- Remove:
  Right Middle Fairing (see Middle Fairing Removal in the Frame chapter)
  Bolts [A]
  Cap [B]
- Pour the coolant into a container.
- Remove:
  Reserve Tank Hose [C]
  Reserve Tank Overflow Hose [D]
  Coolant Reserve Tank [E]
- Installation is the reverse of removal.

○Tighten:

Torque - Coolant Reserve Tank Mounting Bolts: 7.9 N·m (0.81 kgf·m, 70 in·lb)

○Run the hoses correctly (see Cable, Wire, and Hose Routing section in the Appendix chapter).

○Fill the coolant reserve tank with coolant (see Coolant Change in the Periodic Maintenance chapter).

Water Pump

Water Pump Removal

- Drain the coolant (see Coolant Change in the Periodic Maintenance chapter).
- Remove:
  Water Hose [A]
  Water Pump Cover Bolts [B]
  Water Pump Cover [C]

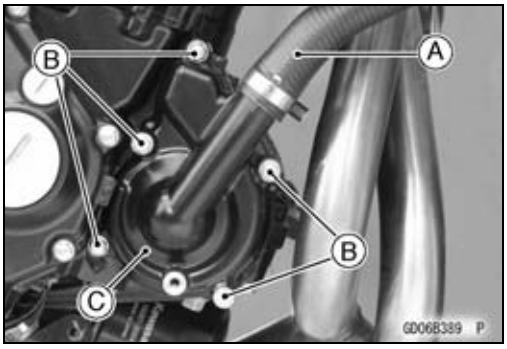

- Shift the transmission into 1st gear.
- While applying the rear brake, remove the water pump impeller bolt [A] and washer.
- Remove:
  Impeller [B]
  Water Pump Housing [C]

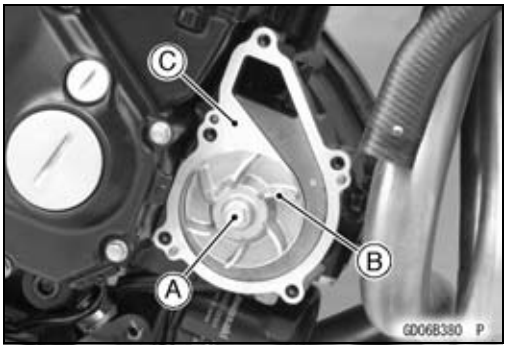

Water Pump Installation

- Replace the O-rings [A] on the water pump housing with new ones.
- Replace the water pump housing oil seal [B] with a new one and install it (see Water Pump Housing Assembly).

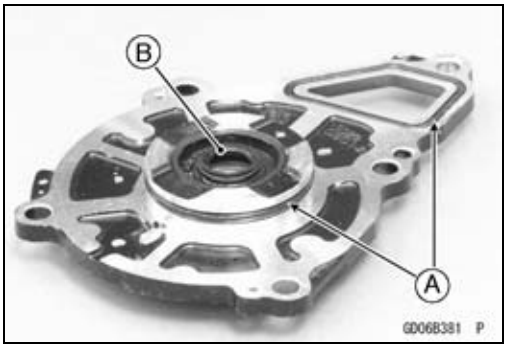

- Be sure that the dowel pin [A] is in position.
- Install the water pump housing.
- Install the impeller.

○Apply water to the inside of the mechanical seal.

- Put the washer on the water pump impeller bolt.
- Tighten:

Torque - Water Pump Impeller Bolt: 9.8 N·m (1.0 kgf·m, 87 in·lb)

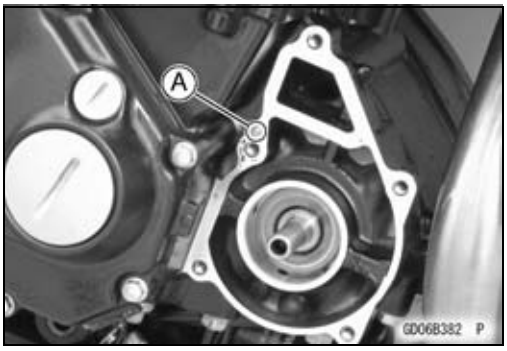

- Replace the O-ring [A] on the water pump cover with a new one and apply grease to it.

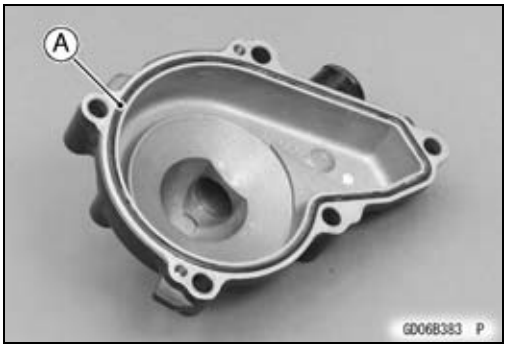

Water Pump

- Be sure that the dowel pins [A] are in position.

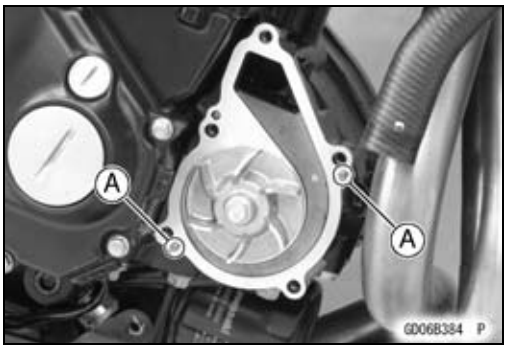

- Install the water pump cover and the bolts.
  [A] L = 40 mm (1.6 in.)
  [B] L = 30 mm (1.2 in.)
- Tighten:

  Torque - Water Pump Cover Bolts: 9.8 N·m (1.0 kgf·m, 87 in·lb)

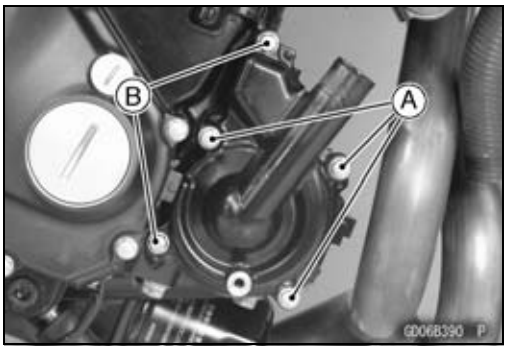

- When installing the water hose, align the white paint mark [A] with the line [B] on the water pump cover.
- Install the water hose clamp [C] so that the screw head faces the front.
- Tighten:

  Torque - Water Hose Clamp Screws: 3.0 N·m (0.31 kgf·m, 27 in·lb)

- Fill the radiator with coolant (see Coolant Change in the Periodic Maintenance chapter).

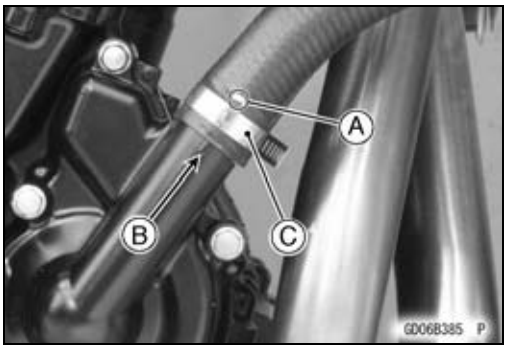

Water Pump Inspection

- Check the drainage outlet passage [A] at the bottom of the water pump body for coolant leaks.

★If the mechanical seal is damaged, the coolant leaks through the seal and drains through the passage. Replace the mechanical seal unit with a new one.

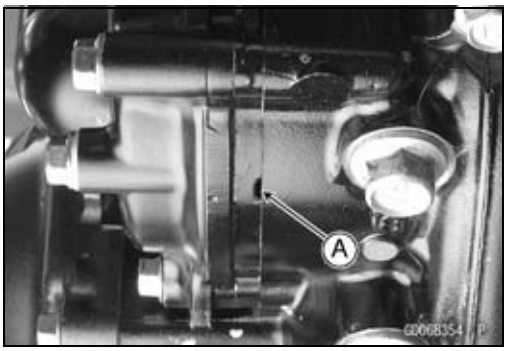

Mechanical Seal Inspection

- Remove the impeller (see Water Pump Removal).
- Visually inspect the mechanical seal.

★If any of the parts is damaged, replace the mechanical seal unit with a new one.

○The sealing seat and rubber seal may be removed easily by hand.
  Impeller Sealing Seat Surface [A]
  Rubber Seal [B]
  Mechanical Seal Diaphragm [C]

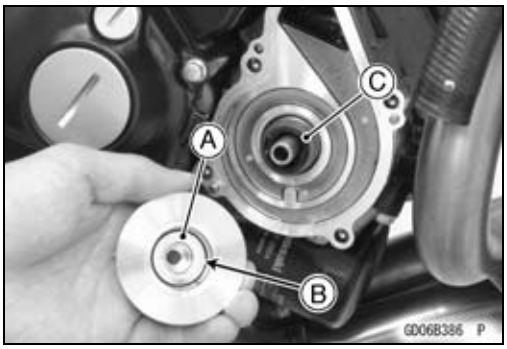

Water Pump

Water Pump Housing Disassembly

NOTICE

Be careful not to damage the sealing surface of the mechanical seal.

- Remove the water pump housing (see Water Pump Removal).
- Take the oil seal [A] out of the housing [B] with a hook [C].

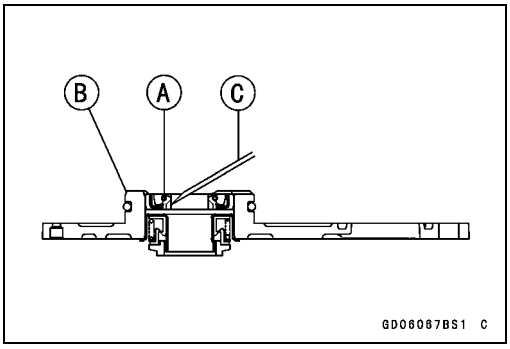

- Press the mechanical seal [A] out of the housing with a bearing driver [B].

  Special Tool - Bearing Driver Set: 57001-1129

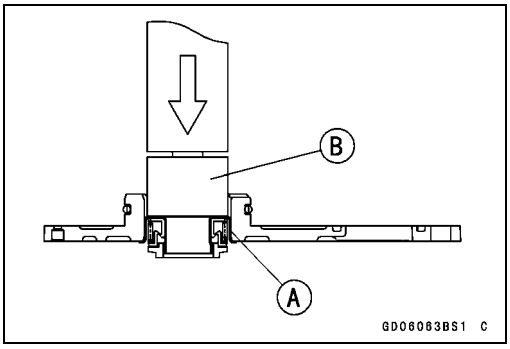

Water Pump Housing Assembly

- Using a cleaning fluid, clean off any oil or dirt on the outer circumference [A] of the oil seal and its mounting surface of the housing.
- Apply grease [B] to the new oil seal [C].
- Press the oil seal into the housing with a bearing driver so that the seal surface is flush [D] with the end of the hole.

  Special Tool - Bearing Driver Set: 57001-1129

- Press the new mechanical seal into the housing with the oil seal driver [E] until its flange [F] touches the surface [G] of the housing.

  Special Tool - Oil Seal Driver: 57001-1660

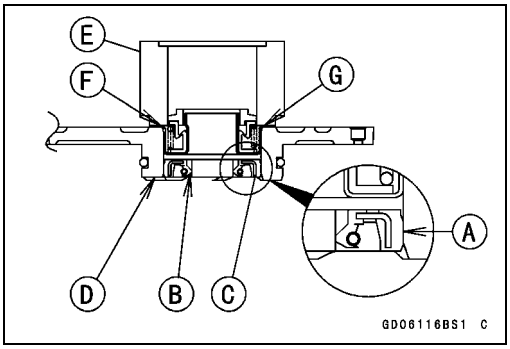

Impeller Assembly

- Clean the sliding surface of the mechanical seal with a high flash-point solvent, and apply a little coolant to the sliding surface to give the mechanical seal initial lubrication.
- Apply coolant to the surfaces of the rubber seal [A] and sealing seat [B], and install the rubber seal and sealing seat into the impeller by pressing them by hand until the seat stops at the bottom of the hole.

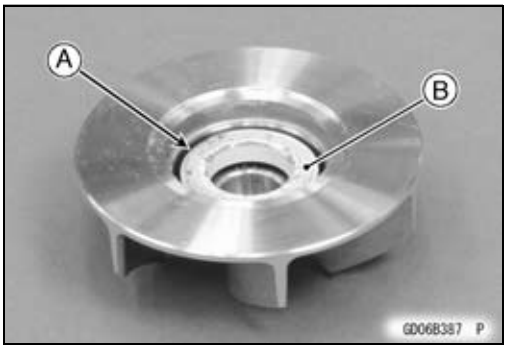

Pump Impeller Inspection

- Remove the water pump cover (see Water Pump Removal).
- Visually inspect the impeller [A].

★If the surface is corroded, or if the blades are damaged, replace the impeller with a new one (see Water Pump Removal/Installation).

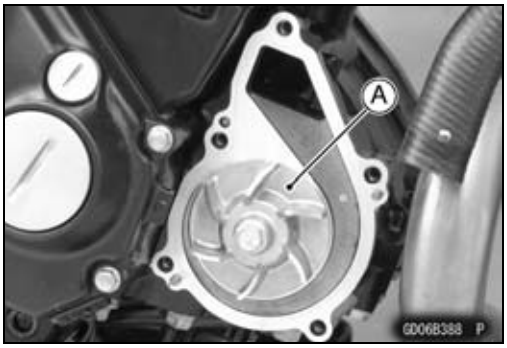

Radiator

Radiator and Radiator Fan Removal

- Drain the coolant (see Coolant Change in the Periodic Maintenance chapter).
- Remove the left middle fairing (see Middle Fairing Removal in the Frame chapter).
- Disconnect the radiator fan lead connector [A].
- Remove the water hose [B] from the radiator.

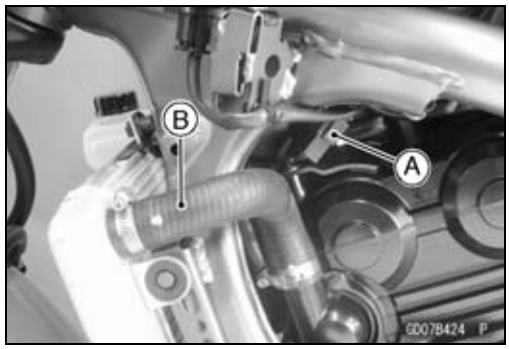

- Clear the rubber cover [A] from the filler neck.
- Remove:
  Water Hose [B]
  Radiator Bolt [C] and Collar

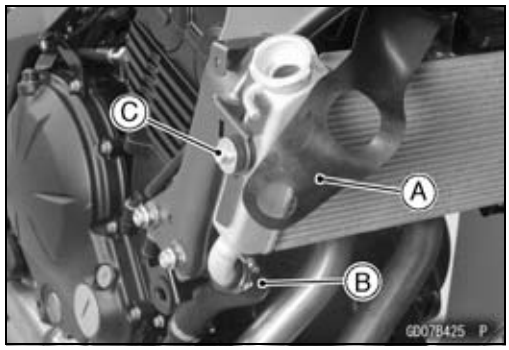

- Remove the radiator [A] by pulling it toward the left [B], noting the baffle plate [C] on the cylinder head cover.

NOTICE

Do not touch the radiator core. This could damage the radiator fins, resulting in loss of cooling efficiency.

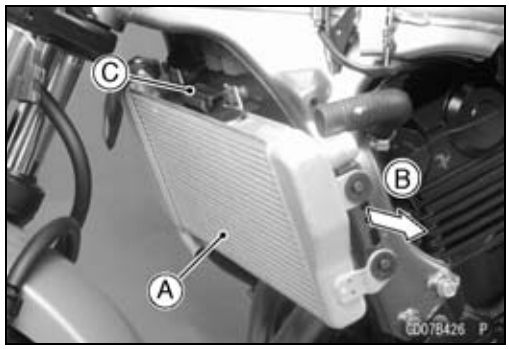

- Remove:
  Radiator Fan Mounting Bolts [A]
  Radiator Fan [B]

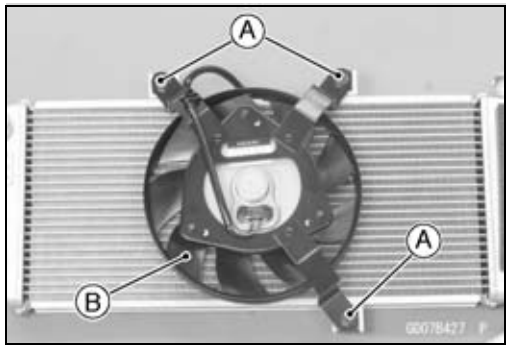

Radiator

Radiator and Radiator Fan Installation

- Install the radiator fan [A] and tighten the bolts.
- Install the rubber dampers [B] and collar [C] to the radiator and frame.
- Install the radiator so that the projections [D] on the frame fit into the holes [E] on the dampers.

○Note the baffle plate on the cylinder head cover when installing the radiator.

- Tighten:

  Torque - Radiator Bolt [F]: 7.9 N·m (0.81 kgf·m, 70 in·lb)

- Position the reserve tank hose clamp [G] so that its pinch heads faces downward.
- Install the water hose clamps [H] as shown in the figure.
- Tighten:

  Torque - Water Hose Clamp Screws: 3.0 N·m (0.31 kgf·m, 27 in·lb)

- Fill the radiator with coolant (see Coolant Change in the Periodic Maintenance chapter).

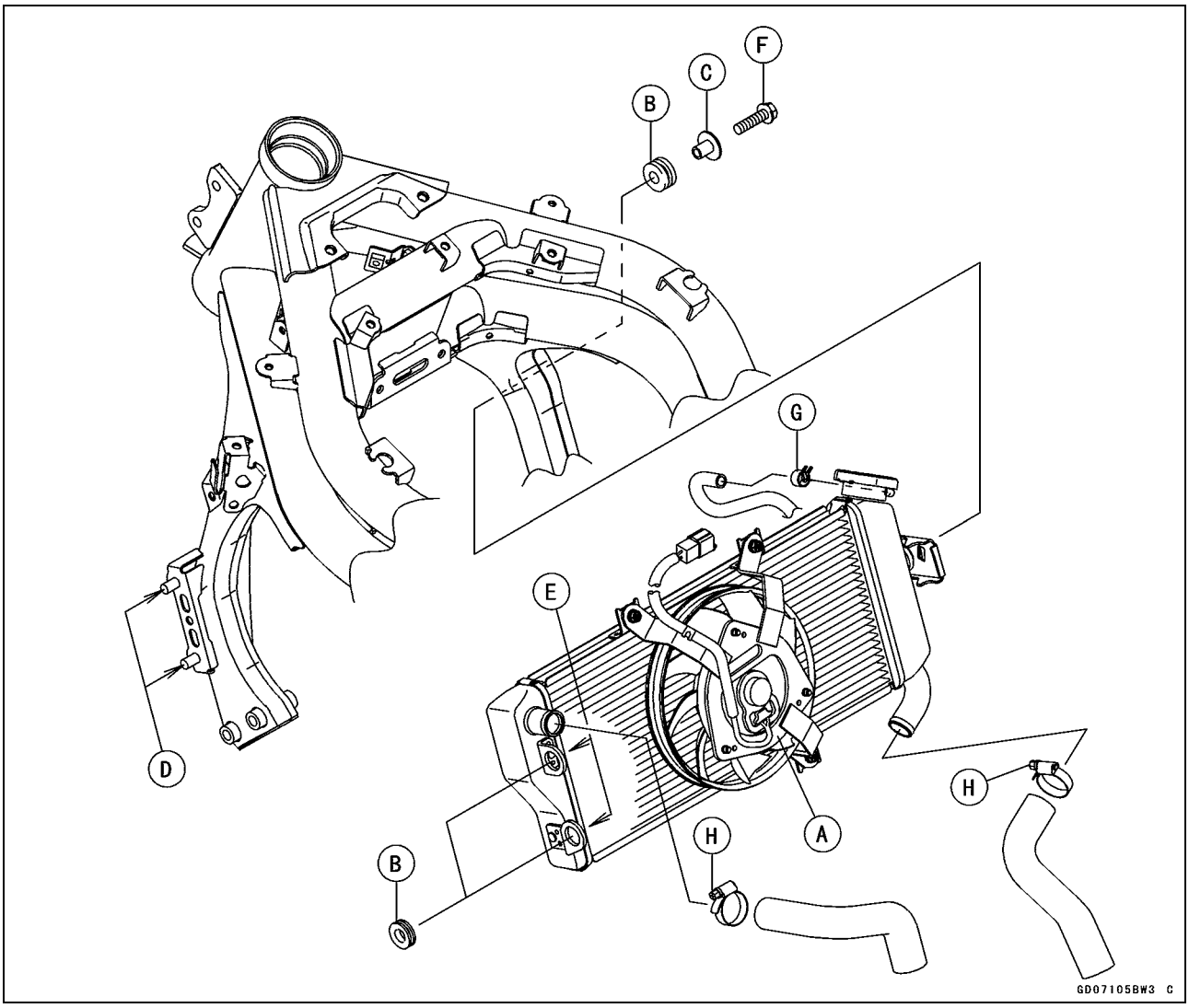

Radiator

Radiator Inspection

- Remove the radiator (see Radiator and Radiator Fan Removal).
- Inspect the radiator core.

★If there are obstructions to air flow, remove them.

★If the corrugated fins [A] are deformed, carefully straighten them.

★If the air passages of the radiator core are blocked more than 20% by unremovable obstructions or irreparably deformed fins, replace the radiator with a new one.

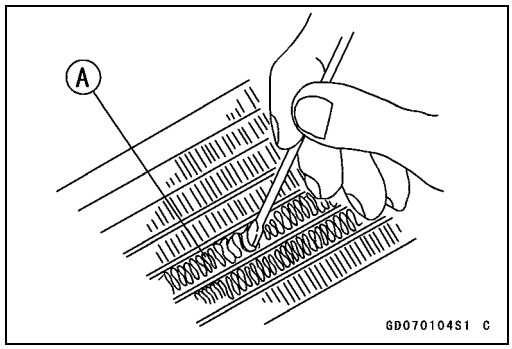

NOTICE

When cleaning the radiator with steam cleaner, be careful of the following to prevent radiator damage:
Keep the steam gun [A] away more than 0.5 m (1.6 ft) [B] from the radiator core.
Hold the steam gun perpendicular [C] (not oblique [D]) to the core surface.
Run the steam gun, following the core fin direction.

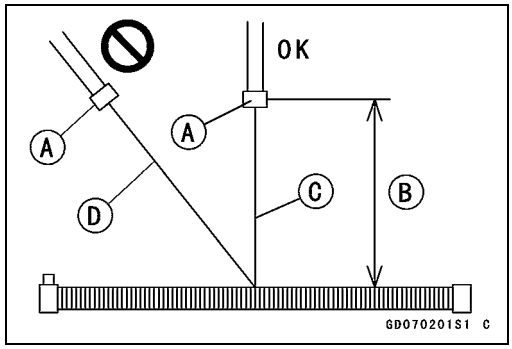

Radiator Cap Inspection

- Remove the radiator cap (see Coolant Change in the Periodic Maintenance chapter).
- Check the condition of the bottom [A] and top [B] valve seals and valve spring [C].

★If any one of them shows visible damage, replace the cap with a new one.

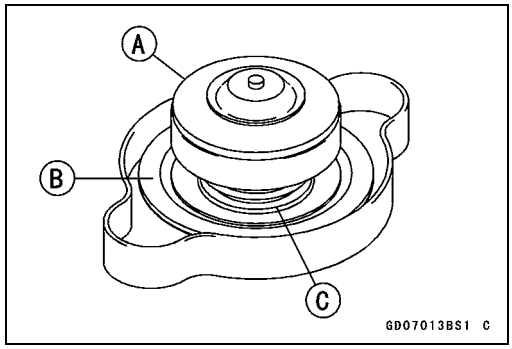

- Install the cap [A] on a cooling system pressure tester [B].

NOTE

○*Wet the cap sealing surfaces with water or coolant to prevent pressure leaks.*

- Watching the pressure gauge, pump the pressure tester to build up the pressure until the relief valve opens: the gauge needle flicks downward. Stop pumping and measure leak time at once. The relief valve must open within the specified range in the table below and the gauge hand must remain within the same range at least 6 seconds.

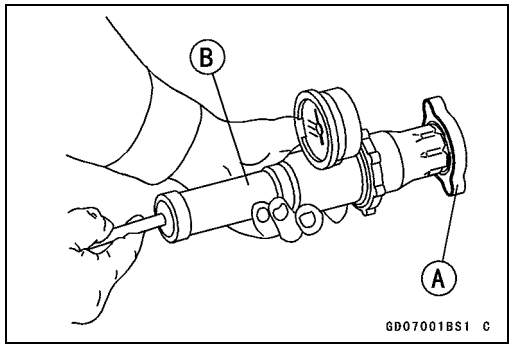

Radiator Cap Relief Pressure
Standard: 112.3 ~ 141.7 kPa (1.15 ~ 1.45 kgf/cm², 16.3 ~ 20.6 psi)

★If the cap can not hold the specified pressure or if it holds too much pressure, replace it with a new one.

Radiator

Radiator Filler Neck Inspection

- Remove the radiator cap (see Coolant Change in the Periodic Maintenance chapter).
- Inspect the radiator filler neck for signs of damage.
- Inspect the condition of the top and bottom sealing seats [A] in the filler neck. They must be smooth and clean for the radiator cap to function properly.

Thermostat

Thermostat Removal

- Drain the coolant (see Coolant Change in the Periodic Maintenance chapter).
- Remove:
  Left Middle Fairing (see Middle Fairing Removal in the Frame chapter)
  Water Hose [A]
  Thermostat Housing Bolts [B]
  Thermostat Housing [C]

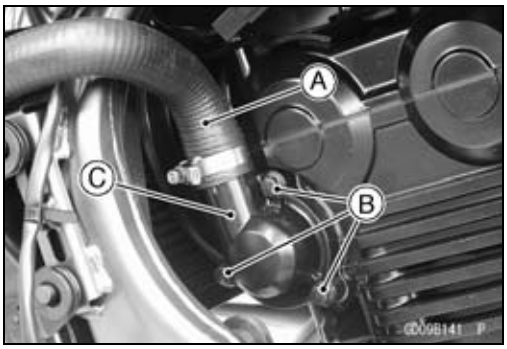

- Pull the thermostat [A] out of the cylinder head.

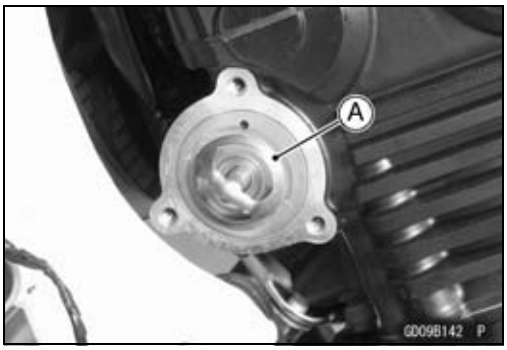

Thermostat Installation

- Install the thermostat [A] in the cylinder head so that the air bleeder hole [B] is on top.

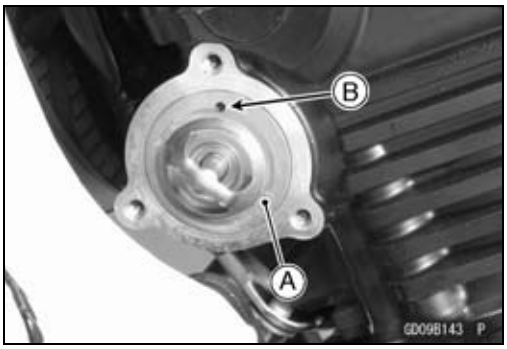

- Install a new O-ring [A] into the thermostat housing and apply grease to it.
- Tighten:

  Torque - Thermostat Housing Bolts: 9.8 N·m (1.0 kgf·m, 87 in·lb)

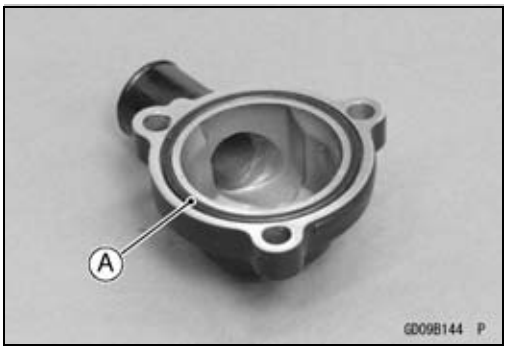

- When installing the water hose, align the white paint mark [A] with the line [B] on the thermostat housing.
- Install the water hose clamp [C] as shown.
- Tighten:

  Torque - Water Hose Clamp Screws: 3.0 N·m (0.31 kgf·m, 27 in·lb)

- Fill the radiator with coolant (see Coolant Change in the Periodic Maintenance chapter).

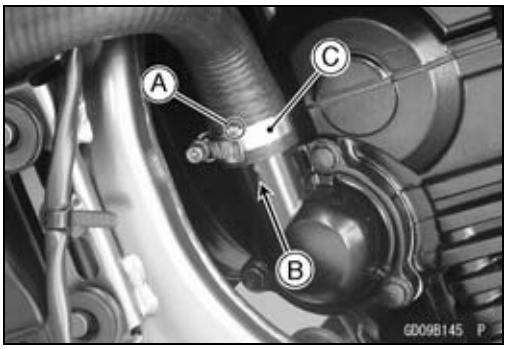

Thermostat

Thermostat Inspection

- Remove the thermostat (see Thermostat Removal), and inspect the thermostat valve [A] at room temperature.

★If the valve is open, replace the thermostat with a new one.

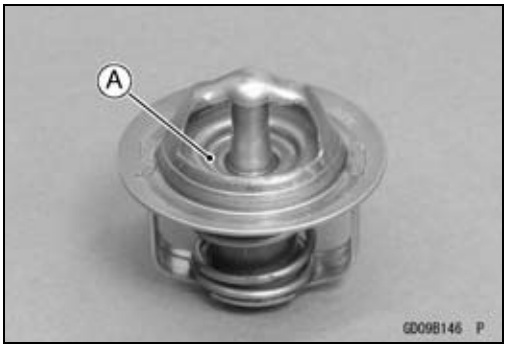

- To check valve opening temperature, suspend the thermostat [A] in a container of water and raise the temperature of the water.

○The thermostat must be completely submerged and must not touch the container sides or bottom. Suspend an accurate thermometer [B] in the water so that the heat sensitive portions [C] are located in almost the same depth. It must not touch the container, either.

Thermostat Valve Opening Temperature
80.5 ~ 83.5°C (177 ~ 182°F)

★If the measurement is out of the specified range, replace the thermostat with a new one.

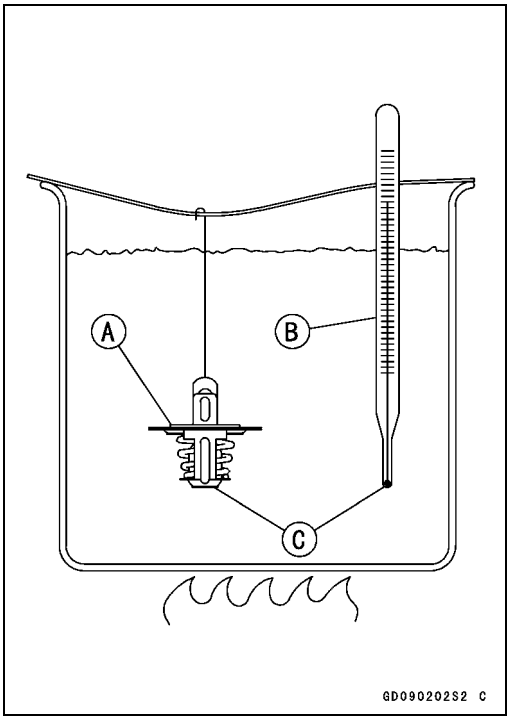

Hose and Pipes

Hose Installation

- Install the hoses, being careful to follow bending direction. Avoid sharp bending, kinking, flattening or twisting.
- Run the hoses correctly (see Cable, Wire, and Hose Routing section in the Appendix chapter).
- Install the clamp [A] as near as possible to the hose end to clear the raised rib of the fitting. This will prevent the hoses from working loose.

○The clamp screws should be positioned correctly to prevent the clamps from contacting the other parts.

- Tighten:

Torque - Water Hose Clamp Screws: 3.0 N·m (0.31 kgf·m, 27 in·lb)

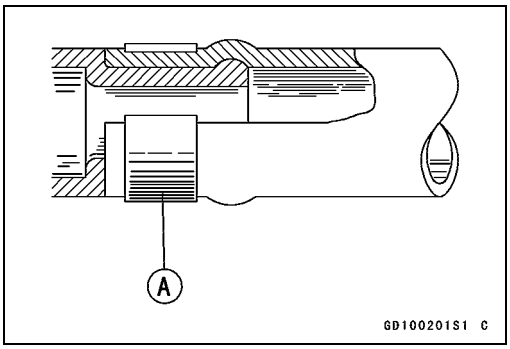

Hose Inspection

- Refer to the Water Hose Damage and Installation Condition Inspection in the Periodic Maintenance chapter.

Water Temperature Sensor

Water Temperature Sensor Removal/Installation

- Refer to the Water Temperature Sensor Removal/Installation in the Fuel System (DFI) chapter.

Water Temperature Sensor Inspection

- Refer to the Water Temperature Sensor Inspection in the Electrical System chapter.

Engine Top End

Table of Contents

Exploded View 5-2
Exhaust System Identification 5-6
Specifications 5-7
Special Tools and Sealant 5-9
Clean Air System 5-11
Air Suction Valve Removal 5-11
Air Suction Valve Installation 5-11
Air Suction Valve Inspection 5-12
Air Switching Valve Removal 5-12
Air Switching Valve Installation 5-12
Air Switching Valve Operation Test 5-12
Air Switching Valve Unit Test 5-12
Clean Air System Hose Inspection 5-13
Cylinder Head Cover 5-14
Cylinder Head Cover Removal 5-14
Cylinder Head Cover Installation 5-15
Camshaft Chain Tensioner 5-17
Camshaft Chain Tensioner Removal 5-17
Camshaft Chain Tensioner Installation 5-17
Camshaft, Camshaft Chain 5-19
Camshaft Removal 5-19
Camshaft Installation 5-21
Camshaft, Camshaft Cap Wear Inspection 5-24
Camshaft Runout Inspection 5-24
Cam Wear Inspection 5-24
Camshaft Chain Removal 5-25
Cylinder Head 5-26
Cylinder Compression Measurement 5-26
Cylinder Head Removal 5-27
Cylinder Head Installation 5-27
Cylinder Head Warp Inspection 5-29
Valves 5-30
Valve Clearance Inspection 5-30
Valve Clearance Adjustment 5-30
Valve Removal 5-30
Valve Installation 5-30
Valve Guide Removal 5-30
Valve Guide Installation 5-31
Valve-to-Guide Clearance Measurement (Wobble Method) 5-31
Valve Seat Inspection 5-32
Valve Seat Repair 5-32
Cylinder, Pistons 5-37
Cylinder Removal 5-37
Cylinder Installation 5-37
Piston Removal 5-38
Piston Installation 5-38
Cylinder Wear Inspection 5-39
Piston Wear Inspection 5-40
Piston Ring, Piston Ring Groove Wear Inspection 5-40
Piston Ring Groove Width Inspection 5-40
Piston Ring Thickness Inspection 5-41
Piston Ring End Gap Inspection 5-41
Throttle Body Assy Holder 5-42
Throttle Body Assy Holder Removal 5-42
Throttle Body Assy Holder Installation 5-42
Muffler 5-43
Muffler Removal 5-43
Muffler Installation 5-44

Exploded View

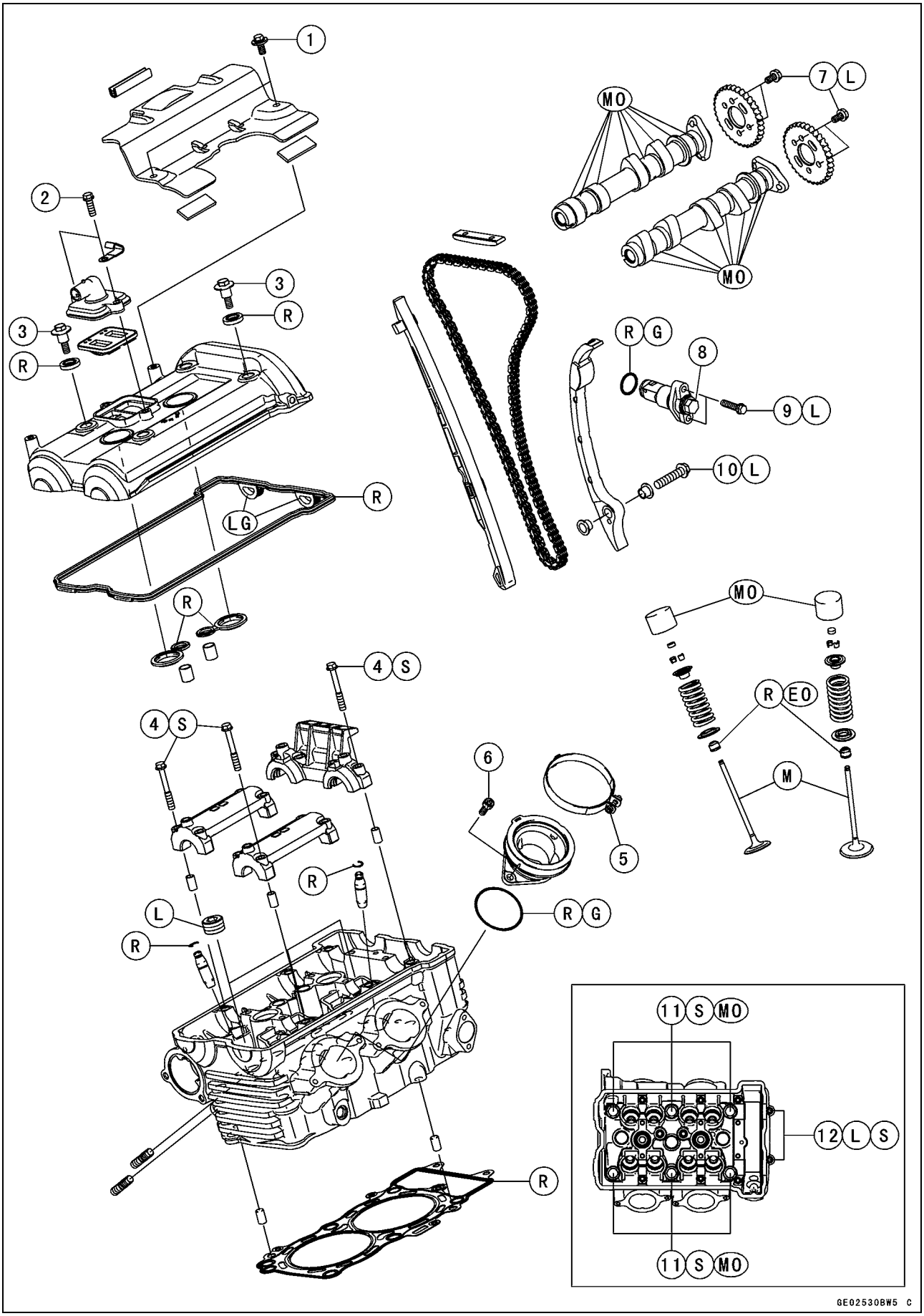

Exploded View

No.	Fastener	Torque			Remarks
		N·m	kgf·m	ft·lb	
1	Baffle Plate Bolts	5.9	0.60	52 in·lb	
2	Air Suction Valve Cover Bolts	9.8	1.0	87 in·lb	
3	Cylinder Head Cover Bolts	9.8	1.0	87 in·lb	
4	Camshaft Cap Bolts	12	1.2	106 in·lb	S
5	Throttle Body Assy Holder Clamp Bolts	2.0	0.20	18 in·lb	
6	Throttle Body Assy Holder Bolts	12	1.2	106 in·lb	
7	Camshaft Sprocket Bolts	15	1.5	11	L
8	Camshaft Chain Tensioner Cap Bolt	20	2.0	15	
9	Camshaft Chain Tensioner Mounting Bolts	9.8	1.0	87 in·lb	L
10	Rear Camshaft Chain Guide Bolt	20	2.0	15	L
11	Cylinder Head Bolts (M10)	56	5.7	41	MO, S
12	Cylinder Head Bolts (M6)	12	1.2	106 in·lb	L, S

EO: Apply engine oil.
G: Apply grease.
L: Apply a non-permanent locking agent.
LG: Apply liquid gasket.
M: Apply molybdenum disulfide grease.
MO: Apply molybdenum disulfide oil solution.
(mixture of the engine oil and molybdenum disulfide grease in a weight ratio 10 : 1)
R: Replacement Parts
S: Follow the specified tightening sequence.

Exploded View

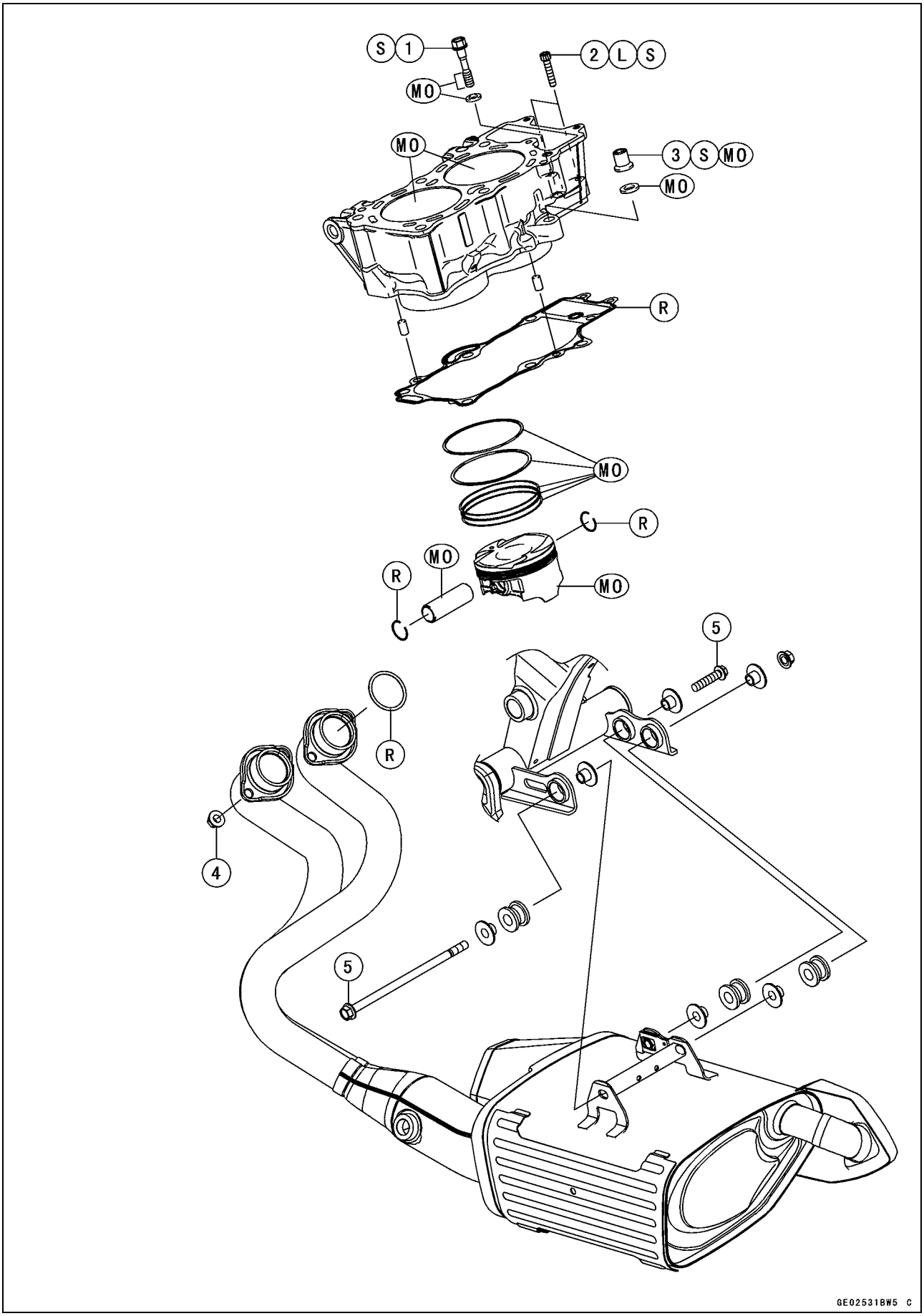

Exploded View

No.	Fastener	Torque			Remarks
		N·m	kgf·m	ft·lb	
1	Cylinder Bolt (M8)	27.5	2.8	20	MO,S
2	Cylinder Bolts (M6)	12	1.2	106 in·lb	L, S
3	Cylinder Nut	49	5.0	36	MO, S
4	Exhaust Pipe Manifold Holder Nuts	17	1.7	13	
5	Muffler Body Mounting Bolts	20	2.0	15	

L: Apply a non-permanent locking agent.
MO: Apply molybdenum disulfide oil solution.
(mixture of the engine oil and molybdenum disulfide grease in a weight ratio 10 : 1)
R: Replacement Parts
S: Follow the specified tightening sequence.

Exhaust System Identification

Exhaust System

MUFFLER	SPECIFICATION	MODEL
Honeycomb Type Catalyst With Oxygen Sensor P/No. 49070-0723 Mark: KHI K 618 EPA Noise Emission Control Information	BR	EX650EC/FC
	WVTA (FULL H)	EX650EC/FC
	GB WVTA (FULL H)	EX650EC/FC
	ID	EX650EC
	PH	EX650EC
	SEA-B2	EX650EC
	AU	EX650FC
	AU LAMS	EX650FC
	SEA-B1	EX650FC
	TH	EX650FC
Honeycomb Type Catalyst Without Oxygen Sensor P/No. 49070-0729 Mark: KHI K 618 EPA Noise Emission Control Information	US	EX650EC
	CA	EX650EC
	CAL	EX650EC
Honeycomb Type Catalyst Without Oxygen Sensor P/No. 49070-0738 Mark: KHI K 618 EPA Noise Emission Control Information	IN	EX650EC

GE24763B F

Muffler Mark Position [A]

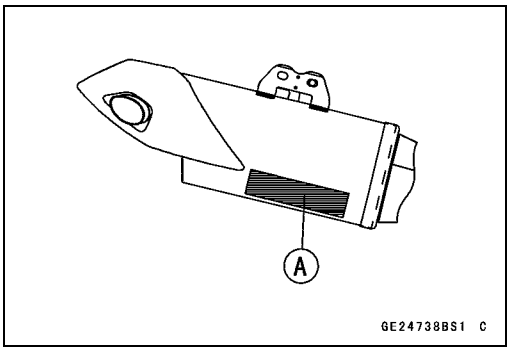

Honeycomb Type Catalyst Position [A]

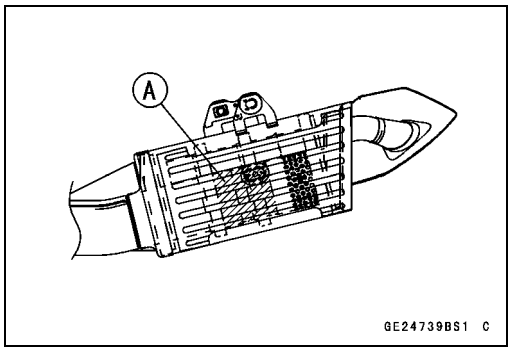

Muffler with Hole [A] for Oxygen Sensor [B]

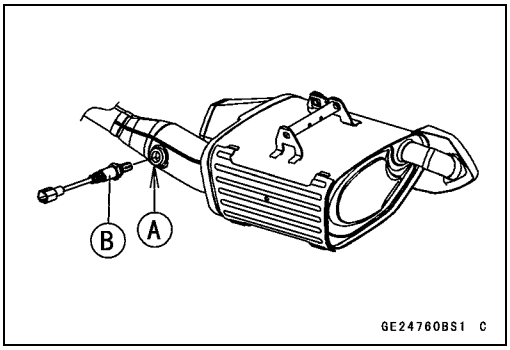

Specifications

Item	Standard	Service Limit
Camshafts		
Cam Height:		
Exhaust	35.843 ~ 35.957 mm (1.4111 ~ 1.4156 in.)	35.74 mm (1.407 in.)
Intake	36.543 ~ 36.657 mm (1.4387 ~ 1.4432 in.)	36.44 mm (1.435 in.)
Camshaft Journal, Camshaft Cap Clearance	0.028 ~ 0.071 mm (0.0011 ~ 0.0028 in.)	0.16 mm (0.0063 in.)
Camshaft Journal Diameter	23.950 ~ 23.972 mm (0.9429 ~ 0.9438 in.)	23.92 mm (0.9417 in.)
Camshaft Bearing Inside Diameter	24.000 ~ 24.021 mm (0.9449 ~ 0.9457 in.)	24.08 mm (0.9480 in.)
Camshaft Runout	TIR 0.02 mm (0.0008 in.) or less	TIR 0.1 mm (0.004 in.)
Cylinder Head		
Cylinder Compression	(Usable Range) 1 000 ~ 1 520 kPa (10.2 ~ 15.5 kgf/cm², 145 ~ 220 psi) at 450 r/min (rpm)	– – –
Cylinder Head Warp	– – –	0.05 mm (0.002 in.)
Valves		
Valve Clearance:		
Exhaust	0.22 ~ 0.31 mm (0.0087 ~ 0.0122 in.)	– – –
Intake	0.15 ~ 0.21 mm (0.0059 ~ 0.0083 in.)	– – –
Valve Head Thickness:		
Exhaust	0.8 mm (0.031 in.)	0.5 mm (0.020 in.)
Intake	0.5 mm (0.020 in.)	0.25 mm (0.0098 in.)
Valve Stem Bend	TIR 0.01 mm (0.0004 in.) or less	TIR 0.05 mm (0.002 in.)
Valve Stem Diameter:		
Exhaust	4.455 ~ 4.470 mm (0.1754 ~ 0.1760 in.)	4.44 mm (0.175 in.)
Intake	4.475 ~ 4.490 mm (0.1762 ~ 0.1768 in.)	4.46 mm (0.176 in.)
Valve Guide Inside Diameter:		
Exhaust	4.500 ~ 4.512 mm (0.1772 ~ 0.1776 in.)	4.58 mm (0.180 in.)
Intake	4.500 ~ 4.512 mm (0.1772 ~ 0.1776 in.)	4.58 mm (0.180 in.)
Valve/Valve Guide Clearance (Wobble Method):		
Exhaust	0.08 ~ 0.16 mm (0.0032 ~ 0.0063 in.)	0.35 mm (0.014 in.)
Intake	0.03 ~ 0.10 mm (0.0012 ~ 0.0039 in.)	0.29 mm (0.011 in.)
Valve Seat Cutting Angle	32°, 45°, 55°, 60°	– – –
Valve Seating Surface:		
Width:		
Exhaust	0.8 ~ 1.2 mm (0.03 ~ 0.05 in.)	– – –
Intake	0.5 ~ 1.0 mm (0.02 ~ 0.04 in.)	– – –
Outside Diameter:		
Exhaust	27.6 ~ 27.8 mm (1.087 ~ 1.094 in.)	– – –
Intake	32.6 ~ 32.8 mm (1.283 ~ 1.291 in.)	– – –

Specifications

Item	Standard	Service Limit
Valve Spring Free Length:		
Exhaust	41.91 mm (1.650 in.)	40.3 mm (1.59 in.)
Intake	41.91 mm (1.650 in.)	40.3 mm (1.59 in.)
Cylinder, Pistons		
Cylinder Inside Diameter	82.994 ~ 83.006 mm (3.2675 ~ 3.2679 in.)	83.09 mm (3.271 in.)
Piston Diameter	82.969 ~ 82.984 mm (3.2665 ~ 3.2671 in.)	82.82 mm (3.261 in.)
Piston/Cylinder Clearance	0.010 ~ 0.037 mm (0.0004 ~ 0.0015 in.)	– – –
Piston Ring/Groove Clearance:		
Top	0.03 ~ 0.07 mm (0.001 ~ 0.003 in.)	0.17 mm (0.0067 in.)
Second	0.02 ~ 0.06 mm (0.001 ~ 0.002 in.)	0.16 mm (0.0063 in.)
Piston Ring Groove Width:		
Top	0.92 ~ 0.94 mm (0.0362 ~ 0.0370 in.)	1.02 mm (0.0402 in.)
Second	1.01 ~ 1.03 mm (0.0398 ~ 0.0406 in.)	1.11 mm (0.0437 in.)
Piston Ring Thickness:		
Top	0.87 ~ 0.89 mm (0.0343 ~ 0.0350 in.)	0.80 mm (0.031 in.)
Second	0.97 ~ 0.99 mm (0.0382 ~ 0.0390 in.)	0.90 mm (0.035 in.)
Piston Ring End Gap:		
Top	0.25 ~ 0.40 mm (0.0098 ~ 0.0157 in.)	0.7 mm (0.028 in.)
Second	0.40 ~ 0.55 mm (0.0157 ~ 0.0217 in.)	0.9 mm (0.035 in.)

Special Tools and Sealant

Compression Gauge, 20 kgf/cm²:
57001-221

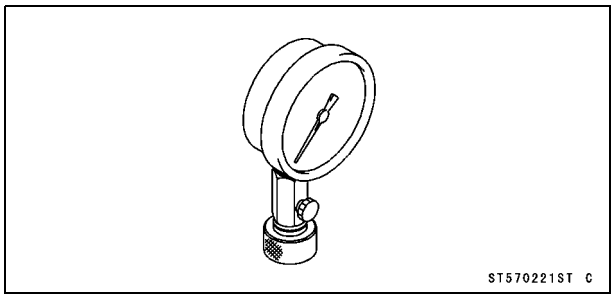

Valve Spring Compressor Assembly:
57001-241

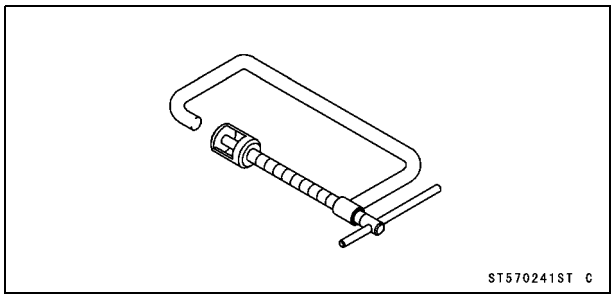

Valve Seat Cutter, 45° - ϕ35:
57001-1116

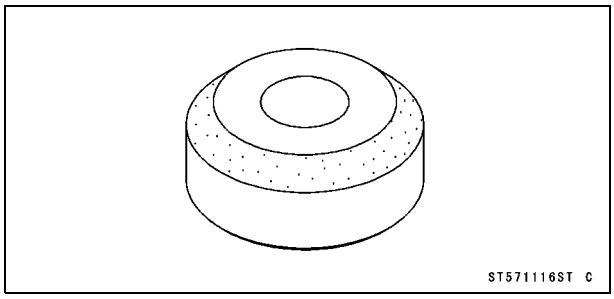

Valve Seat Cutter, 32° - ϕ30:
57001-1120

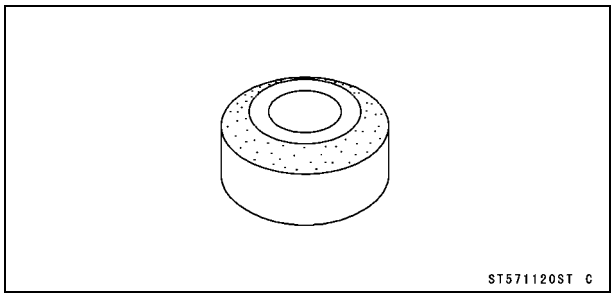

Valve Seat Cutter, 32° - ϕ35:
57001-1121

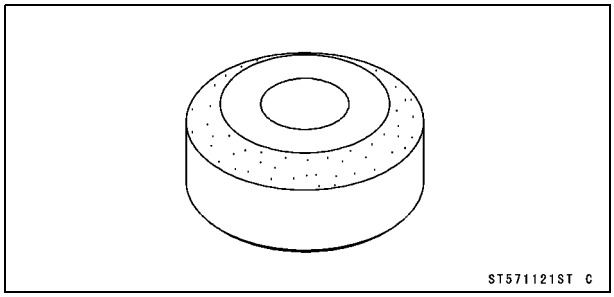

Valve Seat Cutter, 60° - ϕ30:
57001-1123

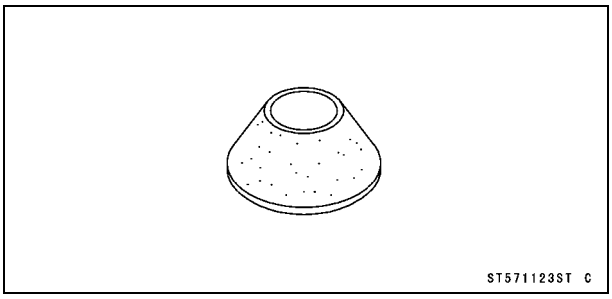

Valve Seat Cutter Holder Bar:
57001-1128

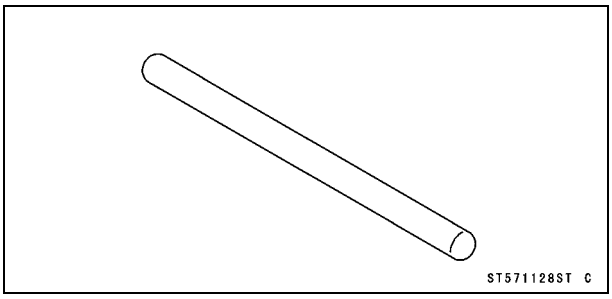

Valve Seat Cutter, 45° - ϕ30:
57001-1187

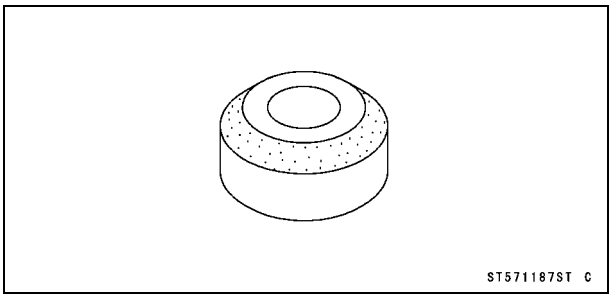

Valve Seat Cutter, 55° - ϕ35:
57001-1247

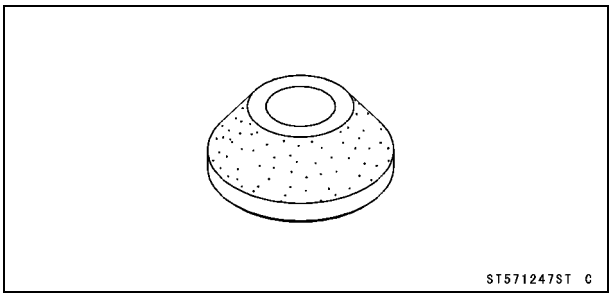

Valve Spring Compressor Adapter, ϕ21:
57001-1272

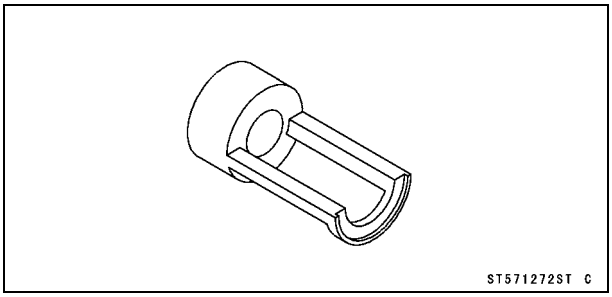

Special Tools and Sealant

Compression Gauge Adapter, M10 × 1.0:
57001-1317

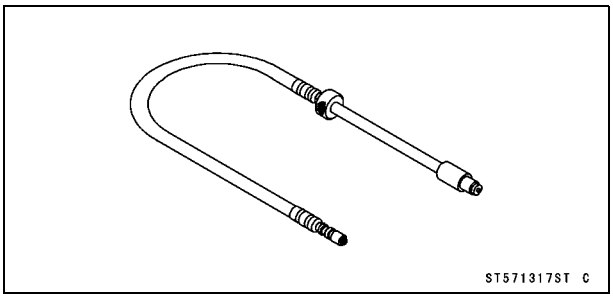

Valve Seat Cutter Holder, ϕ4.5:
57001-1330

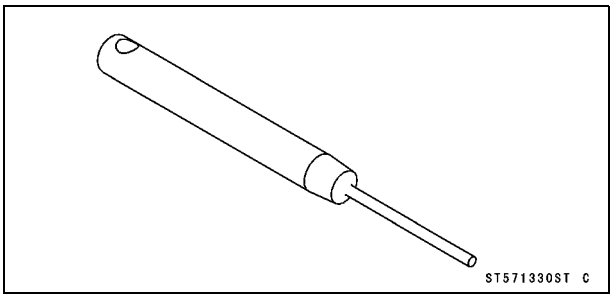

Valve Guide Arbor, ϕ4.5:
57001-1331

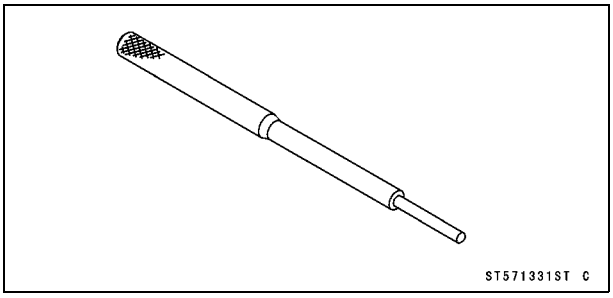

Valve Guide Reamer, ϕ4.5:
57001-1333

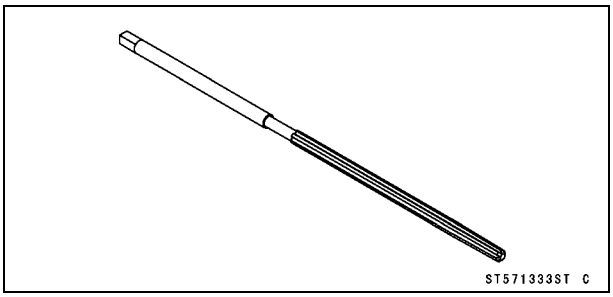

Filler Cap Driver:
57001-1454

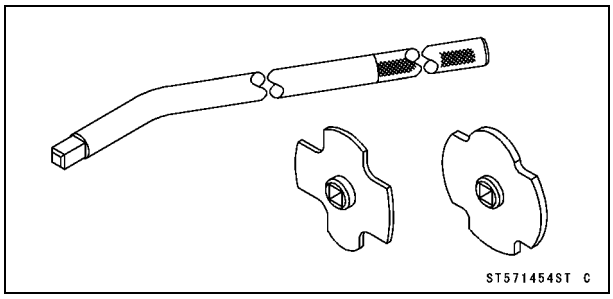

Piston Pin Puller:
57001-1568

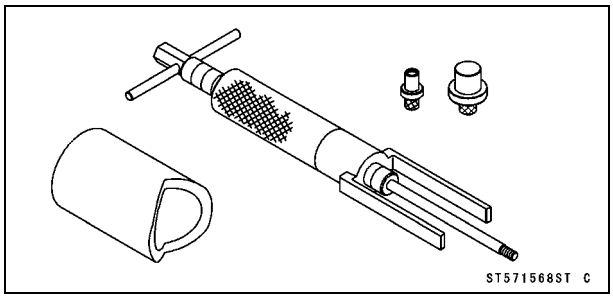

Piston Pin Puller Adapter, ϕ12:
57001-1657

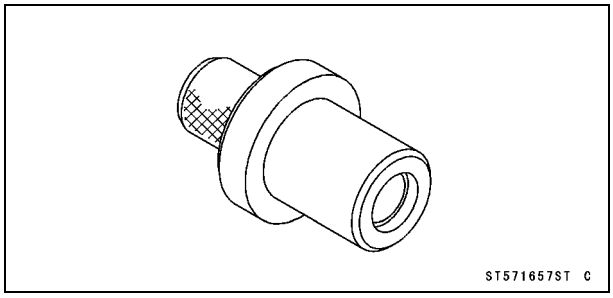

Liquid Gasket, TB1216B:
92104-1064

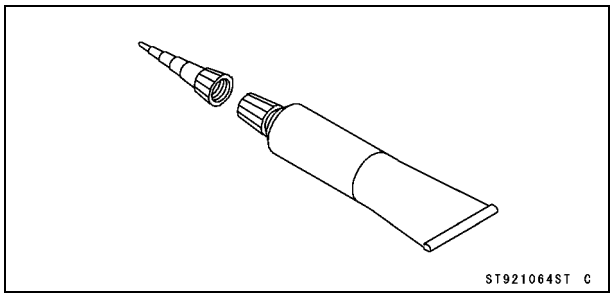

Clean Air System

Air Suction Valve Removal

- Remove:
  Fuel Tank (see Fuel Tank Removal in the Fuel System (DFI) chapter)
  Air Cleaner Housing (see Air Cleaner Housing Removal in the Fuel System (DFI) chapter)
  Air Switching Valve (see Air Switching Valve Removal)
  Air Suction Valve Cover Bolts [A]
  Clamp [B]
  Air Suction Valve Cover [C]

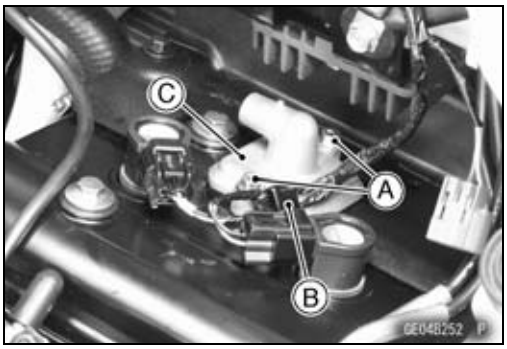

- Remove the air suction valve [A].

Air Suction Valve Installation

- Install the air suction valve [A] so that its side where stopper is fixed with the screws [B] faces the front [C].

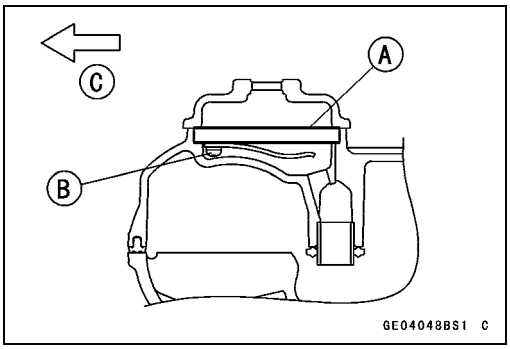

- Install the air suction valve cover [A] and clamp [B] as shown.
- Tighten:

  Torque - Air Suction Valve Cover Bolts [C]: 9.8 N·m (1.0 kgf·m, 87 in·lb)

- Install the other removed parts (see appropriate chapter).

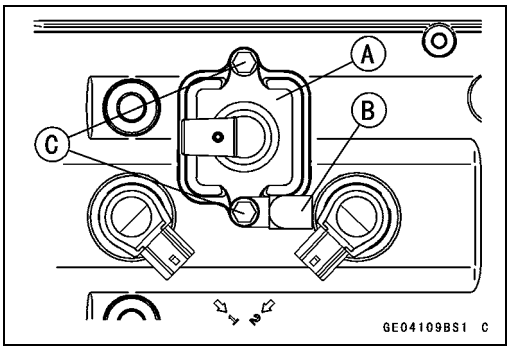

Clean Air System

Air Suction Valve Inspection

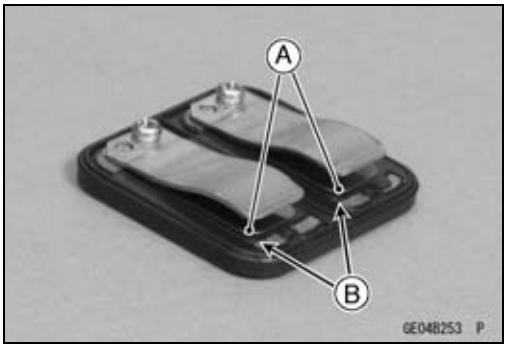

- Remove the air suction valve (see Air Suction Valve Removal).
- Visually inspect the reeds [A] for cracks, folds, warps, heat damage or other damage.

★If there is any doubt as to the condition of the reeds, replace the air suction valve as an assembly.

- Check the reed contact areas [B] of the valve holder for grooves, scratches, any signs of separation from the holder or heat damage.

★If there is any doubt as to the condition of the reed contact areas, replace the air suction valve as an assembly.

★If any carbon or other foreign particles have accumulated between the reed and the reed contact area, wash the valve assembly clean with a high flash-point solvent.

NOTICE

Do not scrape off the deposits with a scraper as this could damage the rubber, requiring replacement of the suction valve assembly.

Air Switching Valve Removal

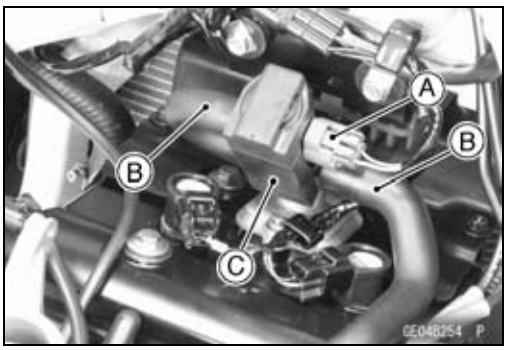

- Remove:
  Fuel Tank (see Fuel Tank Removal in the Fuel System (DFI) chapter)
  Air Cleaner Housing (see Air Cleaner Housing Removal in the Fuel System (DFI) chapter)
- Disconnect the connector [A] and hoses [B] to remove the air switching valve [C].

NOTICE

Never drop the air switching valve, especially on a hard surface. Such a shock to the valve can damage it.

Air Switching Valve Installation

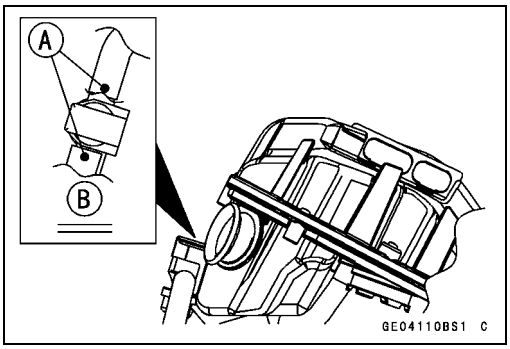

- Installation is the reverse of removal.

○Install the air switching valve hoses so that the white paint marks [A] are located as shown in the figure.
  [B] View from Top

○Run the hoses and lead correctly (see Cable, Wire, and Hose Routing section in the Appendix chapter).

Air Switching Valve Operation Test

- Refer to the Air Suction System Damage Inspection in the Periodic Maintenance chapter.

Air Switching Valve Unit Test

- Refer to the Air Switching Valve Unit Test in the Electrical System chapter.

Clean Air System

Clean Air System Hose Inspection

- Be certain that all the hoses are routed without being flattened or kinked, and are connected correctly to the air cleaner housing, air switching valve and air suction valve cover.

★If they are not, correct them. Replace them if they are damaged.

Cylinder Head Cover

Cylinder Head Cover Removal

- Remove the right middle fairing (see Middle Fairing Removal in the Frame chapter).
- Clear the rubber cover [A] from the filler neck.
- Remove the radiator bolt [B] and lower the radiator [C] for extra clearance.

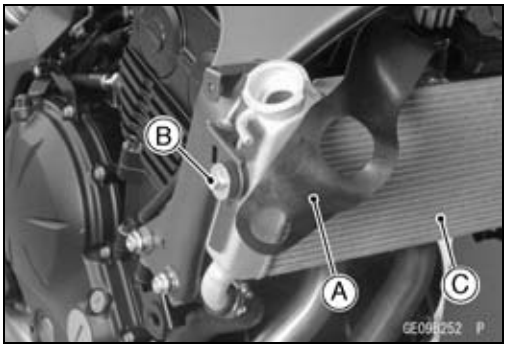

- For models equipped with an ABS, remove the bolt [A] and damper [B].

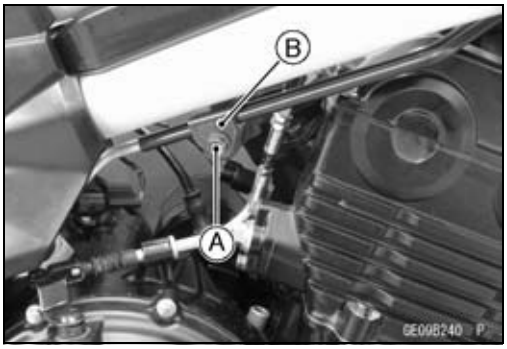

- Remove:
  Fuel Tank (see Fuel Tank Removal in the Fuel System (DFI) chapter)
  Air Cleaner Housing (see Air Cleaner Housing Removal in the Fuel System (DFI) chapter)
  Throttle Body Assy (see Throttle Body Assy Removal in the Fuel System (DFI) chapter)
  Air Suction Valve (see Air Suction Valve Removal)
  Stick Coils (see Stick Coil Removal in the Electrical System chapter).
  Regulator/Rectifier Bracket [A]
  Baffle Plate Bolts [B]
  Baffle Plate [C]
  Clamp [D]
  Cylinder Head Cover Bolts [E] and Rubber Washers
  Cylinder Head Cover [F]

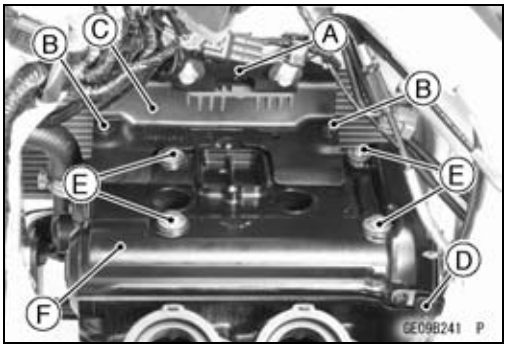

Cylinder Head Cover

Cylinder Head Cover Installation

- Replace the head cover gasket [A] with a new one.
- Clean off any oil or dirt and apply liquid gasket to the areas [B] on the cylinder.

  Sealant - Liquid Gasket, TB1216B: 92104-1064

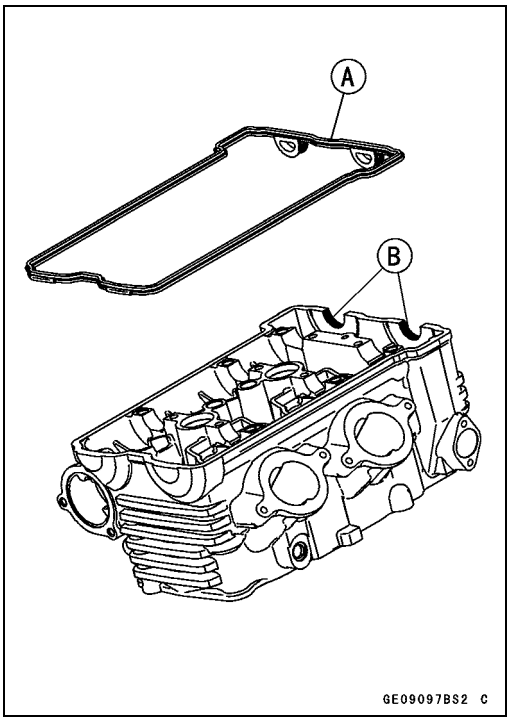

- Replace the plug hole gaskets [A] with new ones.
- Be sure to install the following parts.
  Dowel Pins [B]
  Plug Hole Gaskets

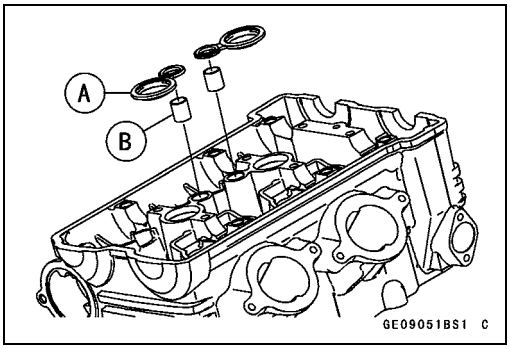

- Install the rubber washers [A] with metal side faces upward.
- Install the cylinder head cover and tighten the bolts.

  Torque - Cylinder Head Cover Bolts: 9.8 N·m (1.0 kgf·m, 87 in·lb)

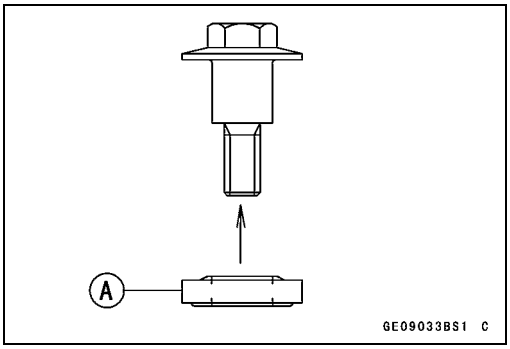

Cylinder Head Cover

- Be sure that the dampers [A] of the baffle plate are in position.
- Tighten:

  Torque - Baffle Plate Bolts: 5.9 N·m (0.60 kgf·m, 52 in·lb)
- Install the other removed parts (see appropriate chapters).

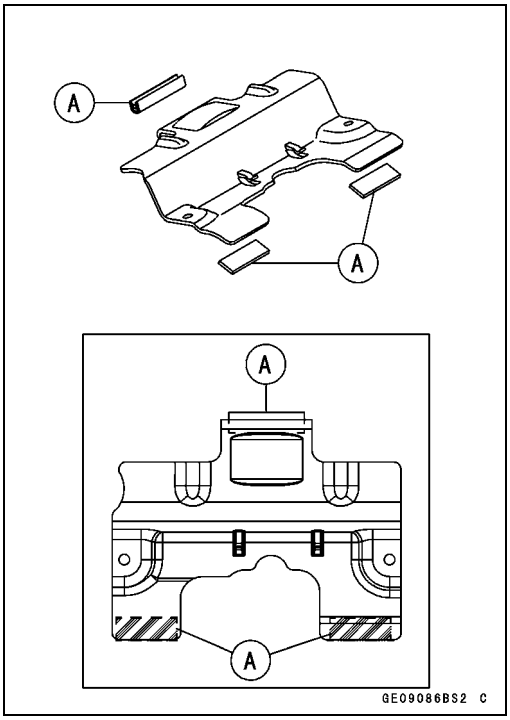

Camshaft Chain Tensioner

Camshaft Chain Tensioner Removal

NOTICE

This is a non-return type camshaft chain tensioner. The push rod does not return to its original position once it moves out to take up camshaft chain slack. Observe all the rules listed below:
When removing the tensioner, do not take out the mounting bolts only halfway. Retightening the mounting bolts from this position could damage the tensioner and the camshaft chain. Once the bolts are loosened, the tensioner must be removed and reset as described in "Camshaft Chain Tensioner Installation."
Do not turn over the crankshaft while the tensioner is removed. This could upset the camshaft chain timing, and damage the valves.

- Remove:
  Right Middle Fairing (see Middle Fairing Removal in the Frame chapter)
  Cap Bolt [A] and Washer

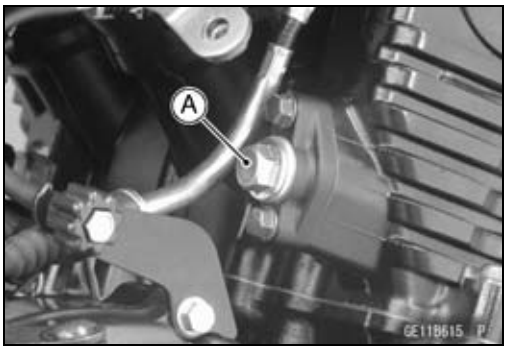

- Remove the spring [A].
- Remove the mounting bolts [B], and take off the camshaft chain tensioner body [C].

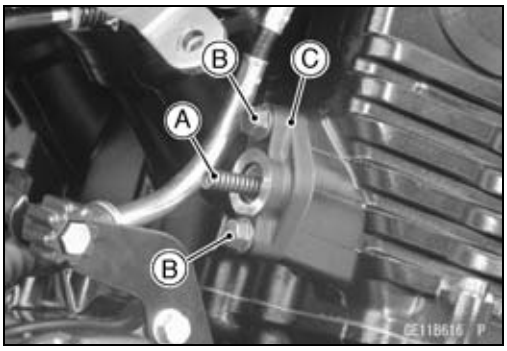

Camshaft Chain Tensioner Installation

- Replace the O-ring [A] with a new one and apply grease to it.
- Release the stopper [B] and push the push rod [C] into the tensioner body [D].

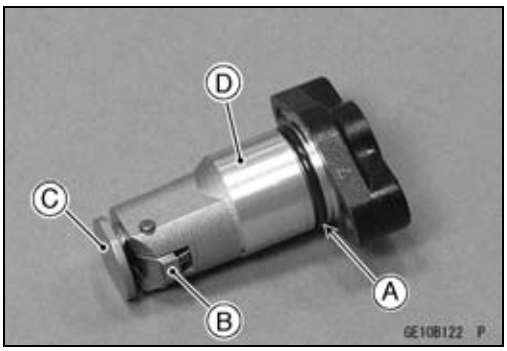

Camshaft Chain Tensioner

- Install the tensioner body so that the stopper [A] faces upward.
- Apply a non-permanent locking agent to the camshaft chain tensioner mounting bolts and tighten them.

Torque - Camshaft Chain Tensioner Mounting Bolts: 9.8 N·m (1.0 kgf·m, 87 in·lb)

- Install:
  Spring [A]
  Washer [B]
- Tighten:

Torque - Camshaft Chain Tensioner Cap Bolt [C]: 20 N·m (2.0 kgf·m, 15 ft·lb)

- Turn the crankshaft 2 turns clockwise to allow the tensioner to expand and recheck the camshaft chain timing.
- Install the right middle fairing (see Middle Fairing Installation in the Frame chapter).

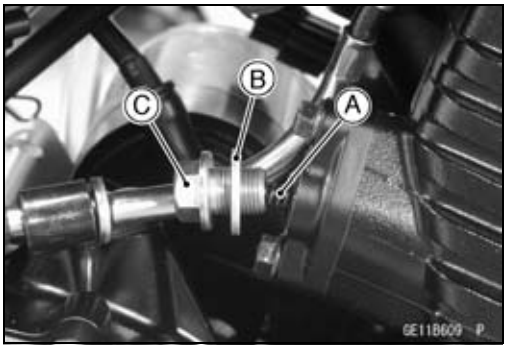

Camshaft, Camshaft Chain

Camshaft Removal

- Remove:
  Cylinder Head Cover (see Cylinder Head Cover Removal)
  Timing Inspection Cap [A]
  Timing Rotor Bolt Cap [B]

Special Tool - Filler Cap Driver [C]: 57001-1454

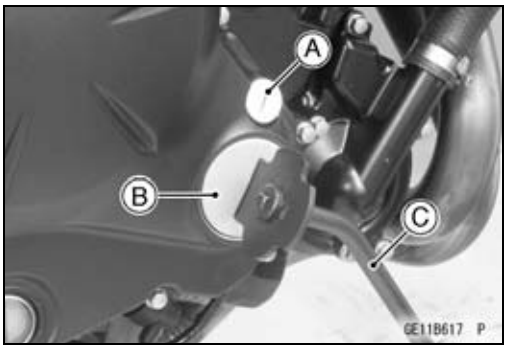

- Using a wrench on the timing rotor bolt [A], turn the crankshaft clockwise until the 2/T mark line [B] on the timing rotor is aligned with the notch [C] in the edge of the timing inspection hole in the clutch cover.

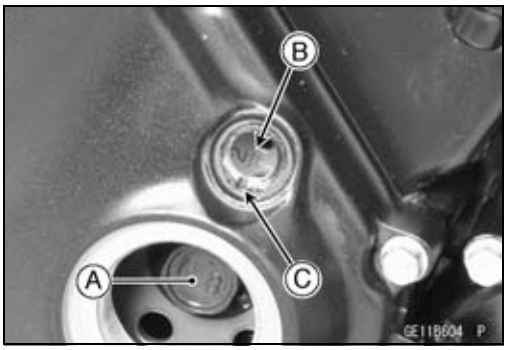

★If the clutch cover is removed, perform the next procedure.

○Using a wrench on the timing rotor bolt, turn the crankshaft clockwise until the 1/T mark line [A] on the timing rotor is aligned with the mating surface [B] of the crankcase front side.

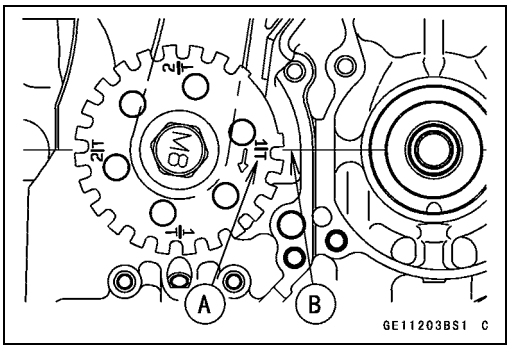

Camshaft, Camshaft Chain

- Remove the camshaft chain tensioner (see Camshaft Chain Tensioner Removal).
- Loosen the camshaft cap bolts following the sequence [1 ~ 12] shown in the figure, and remove them.
- Remove:
  Camshaft Caps [A]
  Camshafts [B]

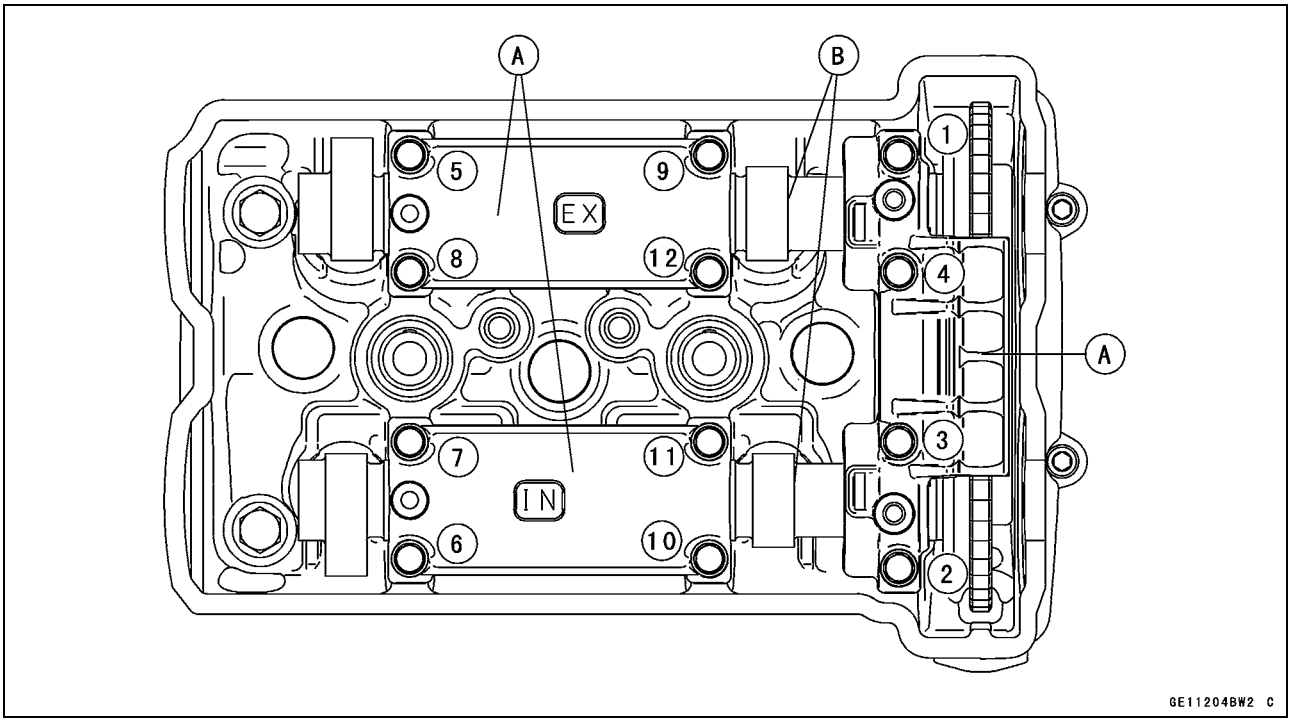

NOTICE

The crankshaft may be turned while the camshafts are removed. Always pull the chain taut while turning the crankshaft. This avoids kinking the chain on the lower (crankshaft) sprocket. A kinked chain could damage both the chain and the sprocket.

- Stuff a clean cloth into the chain tunnel to keep any parts from dropping into the crankcase.

- Remove:
  Camshaft Sprocket Bolts [A]
  Camshaft Sprockets

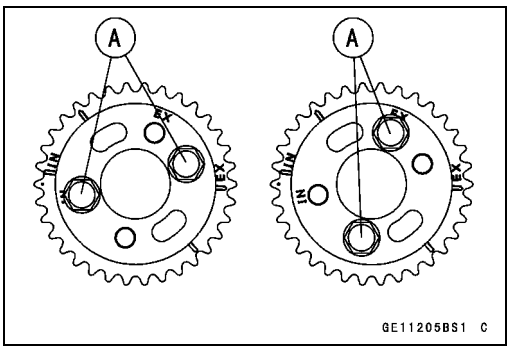

Camshaft, Camshaft Chain

Camshaft Installation

- Replace the plug hole gaskets [A] with new ones.
- Be sure to install the following parts.
  Dowel Pins [B]
  Plug Hole Gaskets

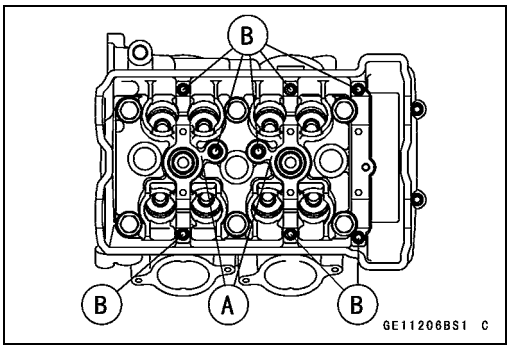

- Install the camshaft sprockets so that the marked ("IN" and "EX") side faces outward.

○The intake [A] and exhaust [B] camshaft sprockets are identical.

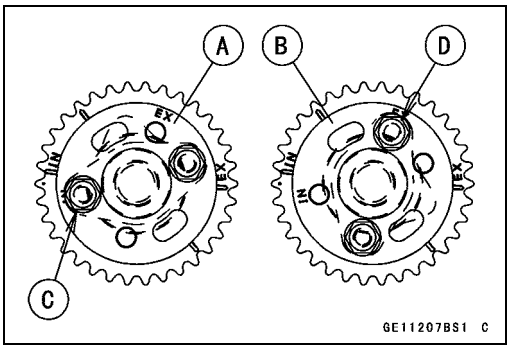

NOTICE

Intake camshaft sprocket must use "IN" marked bolt holes [C]. Exhaust camshaft sprocket must use "EX" marked bolt holes [D].

- Apply a non-permanent locking agent to the camshaft sprocket bolts and tighten them.

Torque - Camshaft Sprocket Bolts: 15 N·m (1.5 kgf·m, 11 ft·lb)

- Apply molybdenum disulfide oil solution to all cams [A], journals [B] and thrust blocks [C] with × marks.

★If a new camshaft is to be used, apply a thin coat of molybdenum disulfide grease to the cam surfaces.

NOTE

○*The exhaust camshaft has a "2412 EX" mark [D] and the intake camshaft has a "2412 IN" mark [E]. Be careful not to mix up these shafts.*

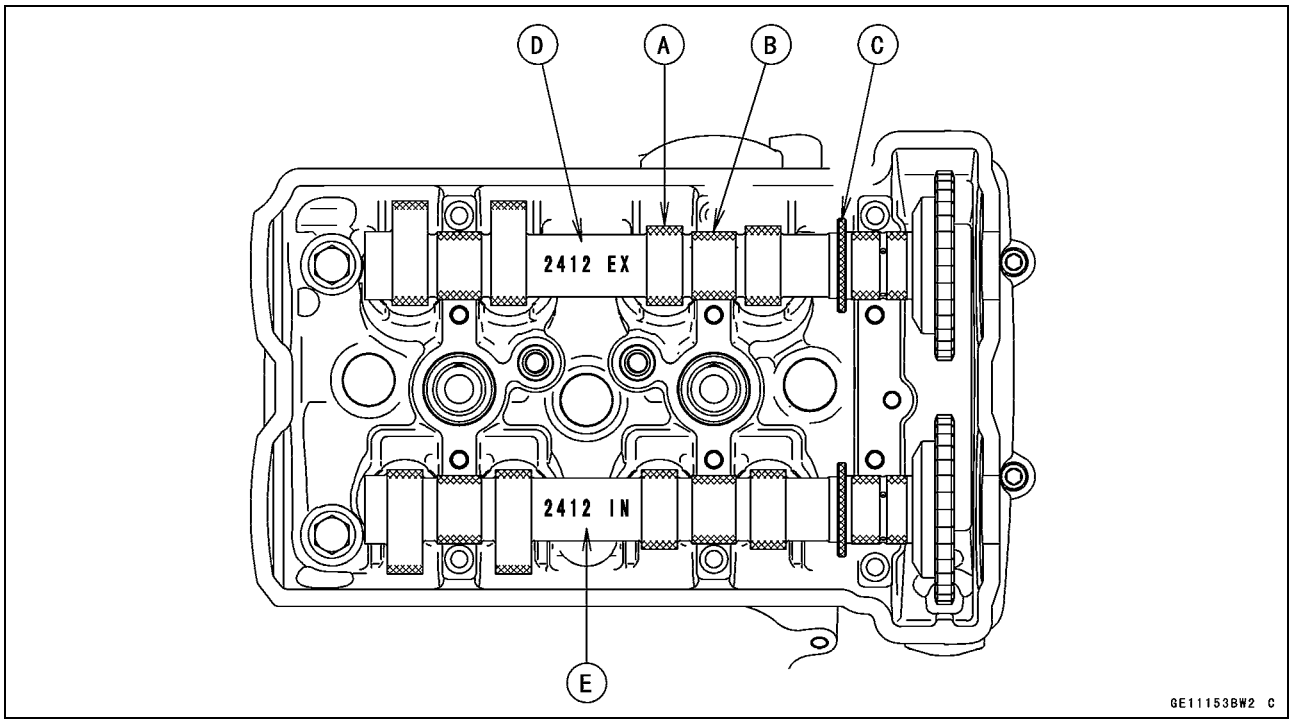

Camshaft, Camshaft Chain

- Using a wrench on the timing rotor bolt [A], turn the crankshaft clockwise until the 2/T mark line [B] on the timing rotor is aligned with the notch [C] in the edge of the timing inspection hole in the clutch cover.

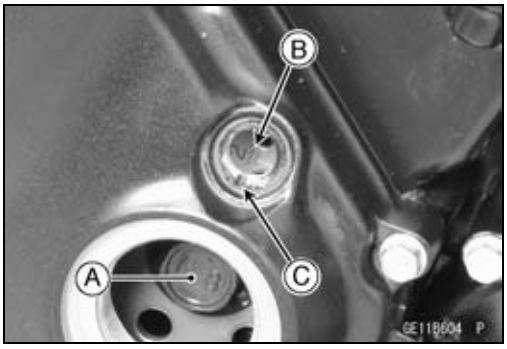

NOTICE

The crankshaft may be turned while the camshafts are removed. Always pull the chain taut while turning the crankshaft. This avoids kinking the chain on the lower (crankshaft) sprocket. A kinked chain could damage both the chain and the sprocket.

★If the clutch cover is removed, perform the next procedure.

○Using a wrench on the timing rotor bolt, turn the crankshaft clockwise until the 1/T mark line [A] on the timing rotor is aligned with the mating surface [B] of the crankcase front side.

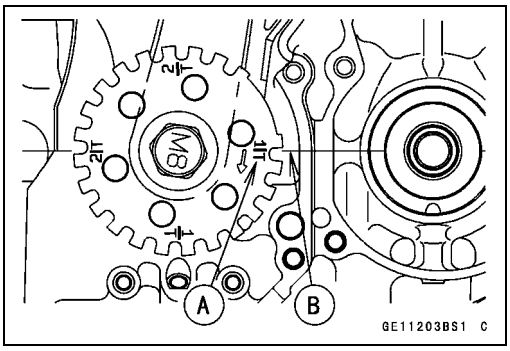

- Pull the tension side (exhaust side) [A] of the chain taut to install the chain.
- Engage the camshaft chain with the camshaft sprockets so that the timing marks on the sprockets are positioned as shown in the figure.

○The timing marks must be aligned with the cylinder head upper surface [B].

EX Mark [C] (Between #1 Pin and #2 Pin)
IN Mark [D] (Between #31 Pin and #32 Pin)
#1 Pin [E]
#2 Pin [F]
#31 Pin [G]
#32 Pin [H]

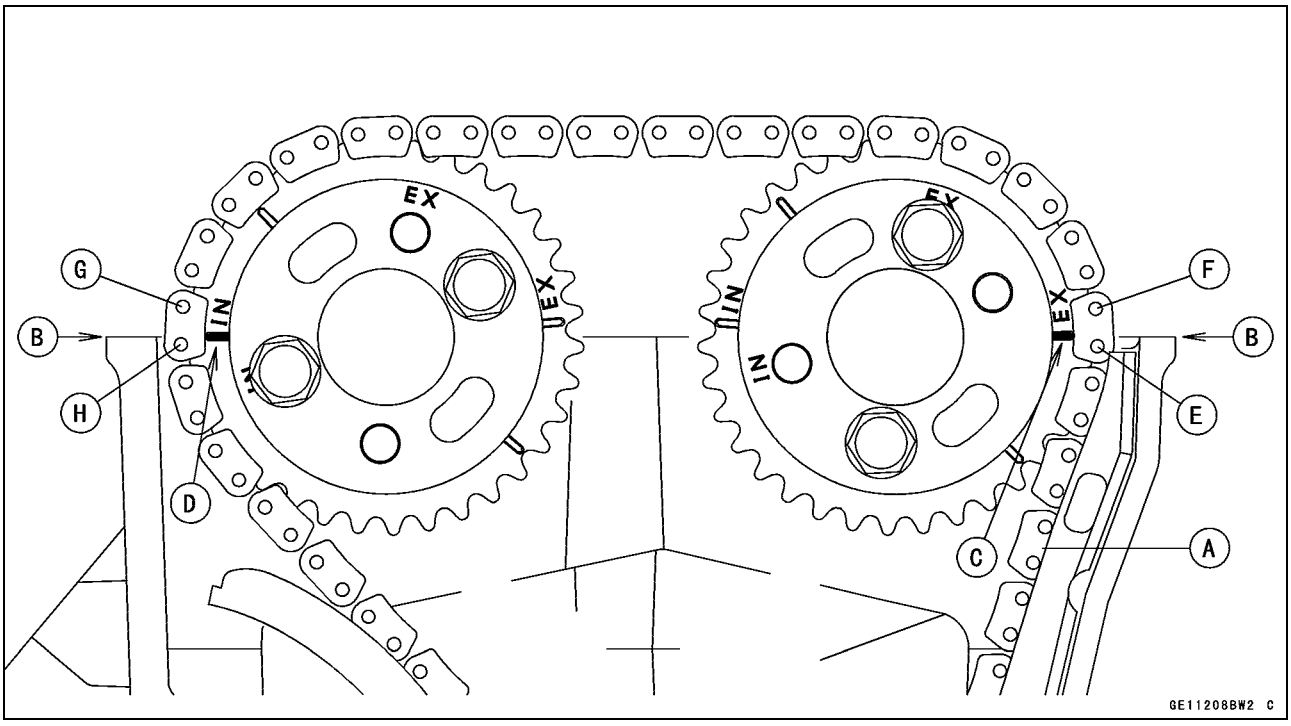

Camshaft, Camshaft Chain

- Before installing the camshaft caps, install the camshaft chain tensioner body temporarily (see Camshaft Chain Tensioner Installation).
- Install the camshaft caps as shown.

NOTE

○*The exhaust cap has an "EX" mark [A] and the intake cap has an "IN" mark [B]. Be careful not to mix up these caps.*

- First tighten the camshaft cap bolts [9 ~ 12] evenly to seat the camshaft in place, then tighten all bolts following the specified tightening sequence [1 ~ 12].

Torque - Camshaft Cap Bolts: 12 N·m (1.2 kgf·m, 106 in·lb)

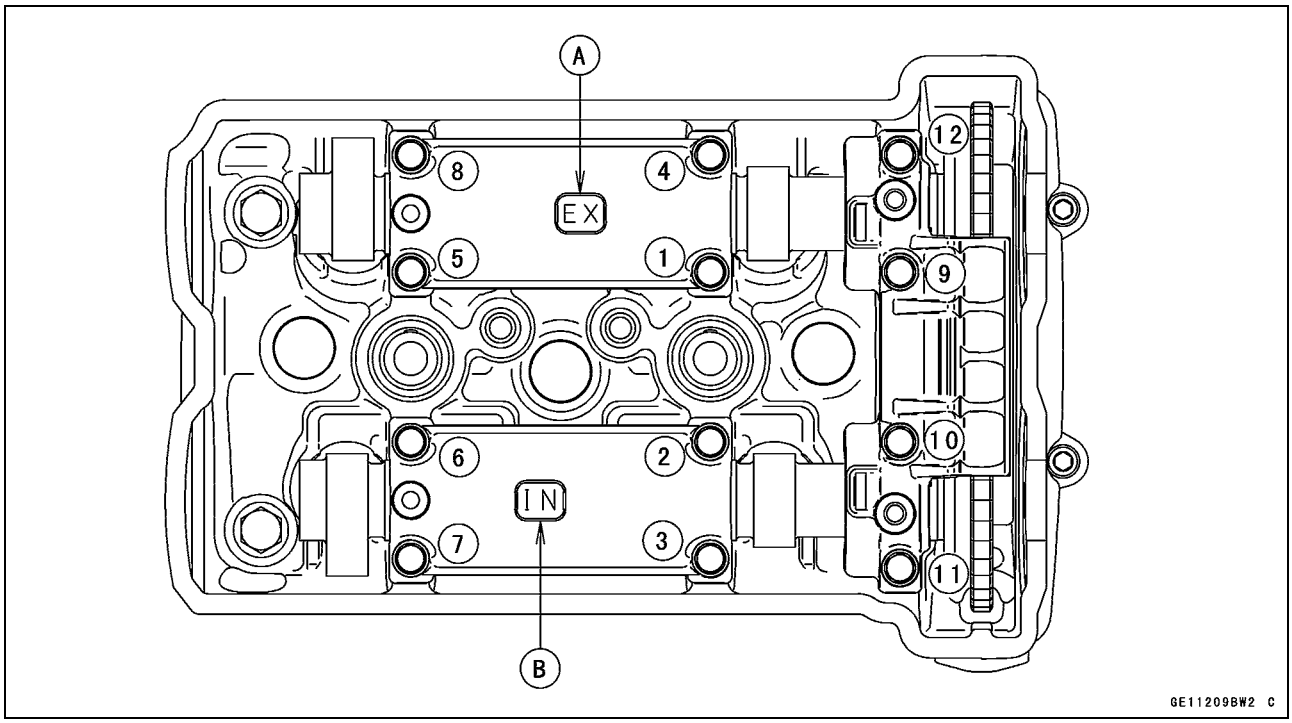

- Install the camshaft chain tensioner (see Camshaft Chain Tensioner Installation).
- Turn the crankshaft 2 turns clockwise to allow the tensioner to expand and recheck the camshaft chain timing.
- Replace the O-rings on the timing inspection cap and timing rotor bolt cap with new ones.
- Apply grease to the new O-rings.
- Install the timing inspection cap and timing rotor bolt cap and tighten them.

Special Tool - Filler Cap Driver: 57001-1454

Torque - Timing Inspection Cap: 3.9 N·m (0.40 kgf·m, 35 in·lb)
Timing Rotor Bolt Cap: 4.9 N·m (0.50 kgf·m, 43 in·lb)

- Install the cylinder head cover (see Cylinder Head Cover Installation).

Camshaft, Camshaft Chain

Camshaft, Camshaft Cap Wear Inspection

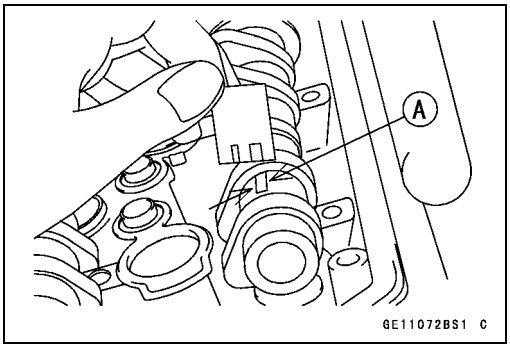

- Remove the camshaft caps (see Camshaft Removal).
- Cut strips of plastigage (press gauge) to journal width. Place a strip on each journal parallel to the camshaft installed in the correct position.
- Tighten the camshaft cap bolts to the specified torque (see Camshaft Installation).

NOTE

○*Do not turn the camshaft when the plastigage is between the journal and camshaft cap.*

- Remove the camshaft cap again, measure each clearance between the camshaft journal and the camshaft cap using plastigage [A].

Camshaft Journal, Camshaft Cap Clearance
Standard: 0.028 ~ 0.071 mm (0.0011 ~ 0.0028 in.)
Service Limit: 0.16 mm (0.0063 in.)

★If any clearance exceeds the service limit, measure the diameter of each camshaft journal with a micrometer.

Camshaft Journal Diameter
Standard: 23.950 ~ 23.972 mm (0.9429 ~ 0.9438 in.)
Service Limit: 23.92 mm (0.9417 in.)

★If the camshaft journal diameter is less than the service limit, replace the camshaft with a new one and measure the clearance again.
★If the clearance still remains out of the limit, replace the cylinder head unit.

Camshaft Runout Inspection

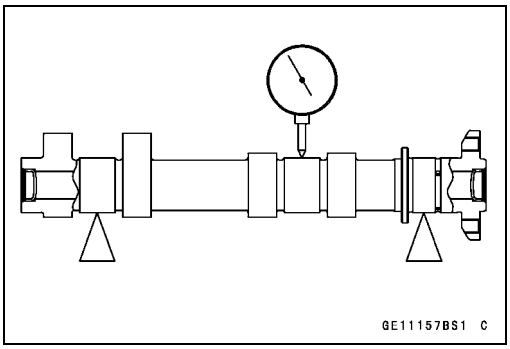

- Remove the camshaft (see Camshaft Removal).
- Set the camshaft in a camshaft alignment jig or on V blocks.
- Measure runout with a dial gauge at the specified place as shown in the figure.

★If the runout exceeds the service limit, replace the shaft.

Camshaft Runout
Standard: TIR 0.02 mm (0.0008 in.) or less
Service Limit: TIR 0.1 mm (0.004 in.)

Cam Wear Inspection

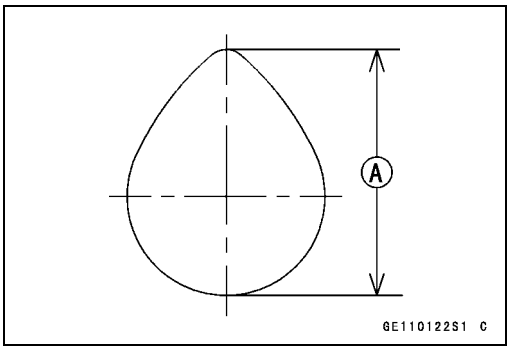

- Remove the camshaft (see Camshaft Removal).
- Measure the height [A] of each cam with a micrometer.

★If the cams are worn down past the service limit, replace the camshaft.

Cam Height
Standard:
Exhaust 35.843 ~ 35.957 mm (1.4111 ~ 1.4156 in.)
Intake 36.543 ~ 36.657 mm (1.4387 ~ 1.4432 in.)
Service Limit:
Exhaust 35.74 mm (1.407 in.)
Intake 36.44 mm (1.435 in.)

Camshaft, Camshaft Chain

Camshaft Chain Removal

- Split the crankcase (see Crankcase Splitting in the Crankshaft/Transmission chapter).
- Remove the camshaft chain [A] from the crankshaft sprocket.

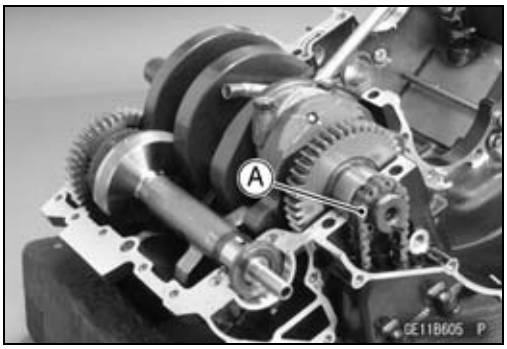

Cylinder Head

Cylinder Compression Measurement

NOTE

○*Be sure the battery is fully charged.*

- Warm up the engine thoroughly.
- Stop the engine.
- Remove:
  Fuel Tank (see Fuel Tank Removal in the Fuel System (DFI) chapter)
  Air Cleaner Housing (see Air Cleaner Housing Removal in the Fuel System (DFI) chapter)
  Stick Coils (see Stick Coil Removal in the Electrical System chapter)
  Spark Plugs (see Spark Plug Replacement in the Periodic Maintenance chapter)

- Attach the compression gauge [A] and adapter [B] firmly into the spark plug hole.

○Using the starter motor, turn the engine over with the throttle fully open until the compression gauge stops rising; the compression is the highest reading obtainable.

Special Tools - Compression Gauge, 20 kgf/cm²: 57001-221
Compression Gauge Adapter, M10 × 1.0: 57001-1317

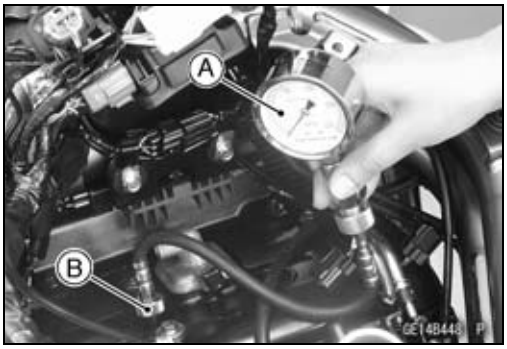

Cylinder Compression
Usable Range: 1 000 ~ 1 520 kPa (10.2 ~ 15.5 kgf/cm², 145 ~ 220 psi) at 450 r/min (rpm)

- Repeat the measurement for the other cylinder.
- Install the spark plugs (see Spark Plug Replacement in the Periodic Maintenance chapter).

○The following table should be consulted if the obtainable compression reading is not within the usable range.

Problem	Diagnosis	Remedy (Action)
Cylinder compression is higher than usable range	Carbon accumulation on piston and in combustion chamber possibly due to damaged valve stem oil seal and/or damaged piston oil rings (This may be indicated by white exhaust smoke).	Remove the carbon deposits and replace damaged parts if necessary.
	Incorrect cylinder head gasket thickness	Replace the gasket with a standard part.
Cylinder compression is lower than usable range	Gas leakage around cylinder head	Replace damaged gasket and check cylinder head warp.
	Bad condition of valve seating	Repair if necessary.
	Incorrect valve clearance	Adjust the valve clearance.
	Incorrect piston/cylinder clearance	Replace the piston and/or cylinder.
	Piston seizure	Inspect the cylinder and replace/repair the cylinder and/or piston as necessary.
	Bad condition of piston ring and/or piston ring grooves	Replace the piston and/or the piston rings.

Cylinder Head

Cylinder Head Removal

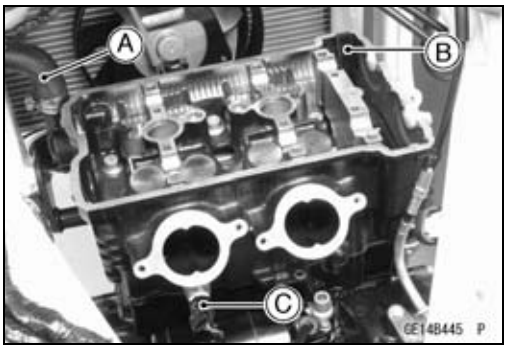

- Drain:
  Engine Oil (see Engine Oil Change in the Periodic Maintenance chapter)
  Coolant (see Coolant Change in the Periodic Maintenance chapter)
- Remove:
  Muffler (see Muffler Removal)
  Cylinder Head Cover (see Cylinder Head Cover Removal)
  Camshafts (see Camshaft Removal)
  Throttle Body Assy (see Throttle Body Assy Removal in the Fuel System (DFI) chapter)
  Throttle Body Assy Holders (see Throttle Body Assy Holder Removal)
  Water Hose [A]
  Front Camshaft Chain Guide [B]
  Water Temperature Sensor Connector [C]

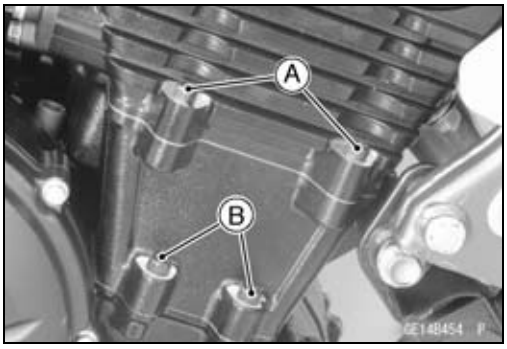

- Firstly remove the M6 cylinder head bolts [A].
- Secondly remove the M6 cylinder bolts [B].

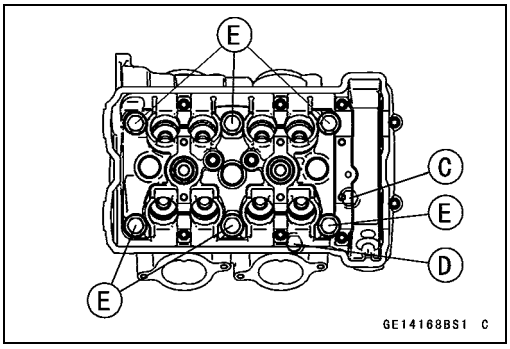

- Thirdly remove the M8 cylinder bolt [C].
- Fourthly remove the M10 cylinder nut [D].
- Lastly remove the M10 cylinder head bolts [E].
- Take off the cylinder head.

Cylinder Head Installation

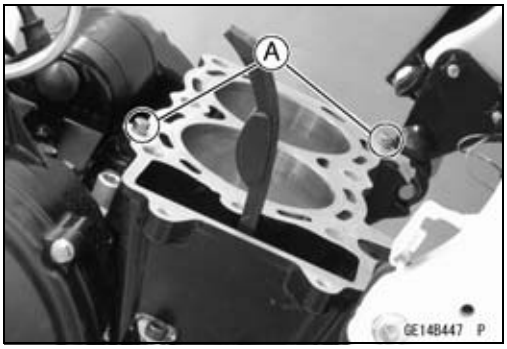

NOTE

○*The camshaft cap is machined with the cylinder head, so if a new cylinder head is installed, use the cap that is supplied with the new head.*

- Be sure that the dowel pins [A] are in position.
- Install a new cylinder head gasket.
- Install the cylinder head onto the cylinder.

Cylinder Head

- Apply molybdenum disulfide oil solution [A] to both sides of washers and the threads of bolts and nut.
  M10 Cylinder Head Bolts [B]
  M10 Cylinder Nut [C]
  M8 Cylinder Bolt [D]
- Tighten the all bolts and nut following the tightening sequence [1 ~ 8].

Torque - Cylinder Head Bolts (M10):
First: 25 N·m (2.5 kgf·m, 18 ft·lb)
Final: 56 N·m (5.7 kgf·m, 41 ft·lb)
Cylinder Nut (M10): 49 N·m (5.0 kgf·m, 36 ft·lb)
Cylinder Bolt (M8): 27.5 N·m (2.8 kgf·m, 20 ft·lb)

NOTE

○*The tightening sequence No.1 ~ No.5 are the cylinder head bolts that are tightened between the cylinder head with the crankcase.*
○*The No.6 is the cylinder head bolt that is tightened between the cylinder head with the cylinder.*
○*The No.7 and No.8 are the cylinder nut and cylinder bolt that are tightened between the cylinder and the crankcase.*

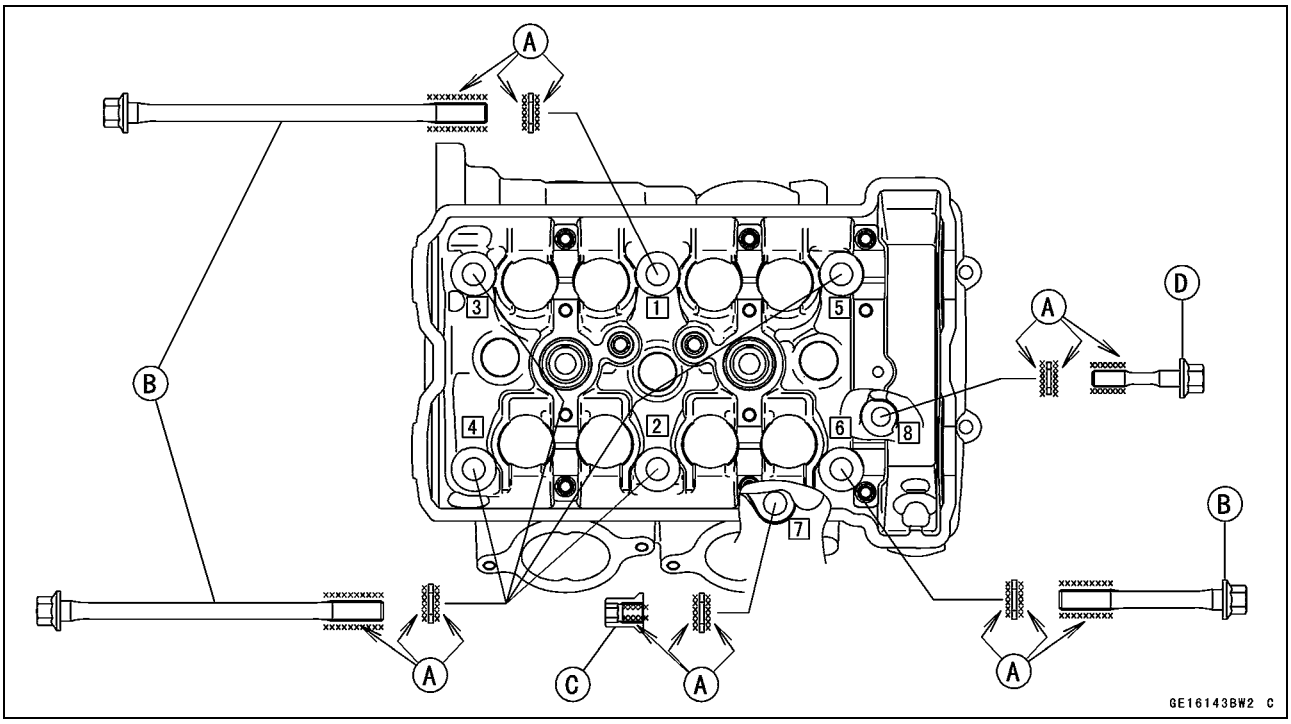

- Apply a non-permanent locking agent to the M6 cylinder head bolts and M6 cylinder bolts [A], and tighten them.

Torque - Cylinder Head Bolts (M6): 12 N·m (1.2 kgf·m, 106 in·lb)
Cylinder Bolts (M6): 12 N·m (1.2 kgf·m, 106 in·lb)

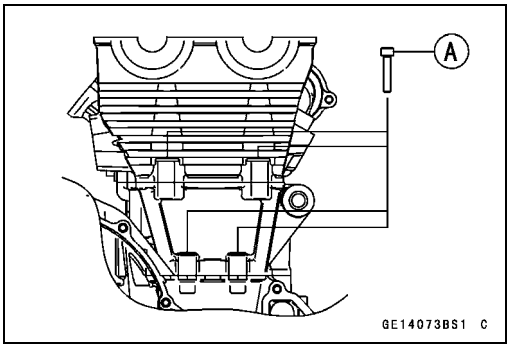

Cylinder Head

- Install the front camshaft chain guide [A].
  - ○Insert the end [B] of front camshaft chain guide into the hollow on the lower crankcase half.
- Install the other removed parts (see appropriate chapters).

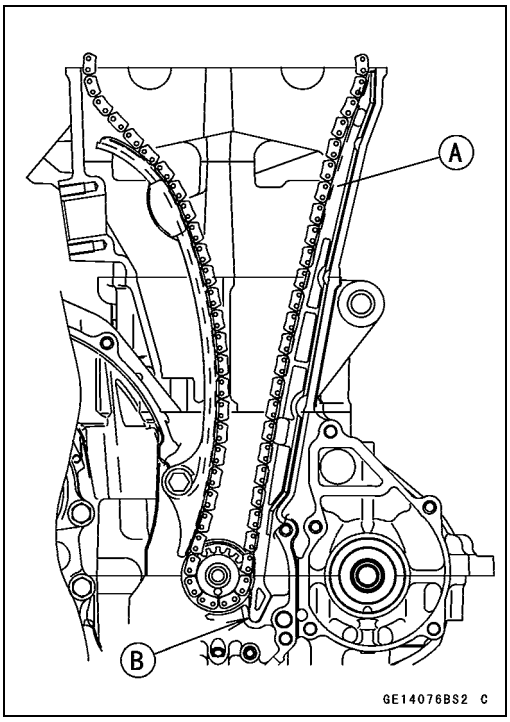

Cylinder Head Warp Inspection

- Remove the cylinder head (see Cylinder Head Removal).
- Clean the cylinder head.
- Lay a straightedge across the lower surface of the cylinder head at several positions.
- Use a thickness gauge [A] to measure the space between the straightedge [B] and the head.

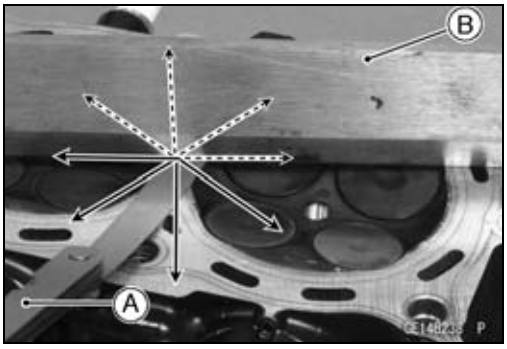

Cylinder Head Warp

Standard: **– – –**

Service Limit: 0.05 mm (0.002 in.)

★If the cylinder head is warped more than the service limit, replace it with a new one.

★If the cylinder head is warped less than the service limit, repair the head by rubbing the lower surface on emery paper secured to a surface plate (first No. 200, then No. 400).

Valves

Valve Clearance Inspection

- Refer to the Valve Clearance Inspection in the Periodic Maintenance chapter.

Valve Clearance Adjustment

- Refer to the Valve Clearance Adjustment in the Periodic Maintenance chapter.

Valve Removal

- Remove cylinder head (see Cylinder Head Removal).
- Remove the valve lifter and shim.

○Mark and record the valve lifter and shim locations so that they can be installed in their original positions.

- Using the valve spring compressor assembly, remove the valve.

Special Tools - Valve Spring Compressor Assembly [A]: 57001-241
Valve Spring Compressor Adapter, ϕ21 [B]: 57001-1272

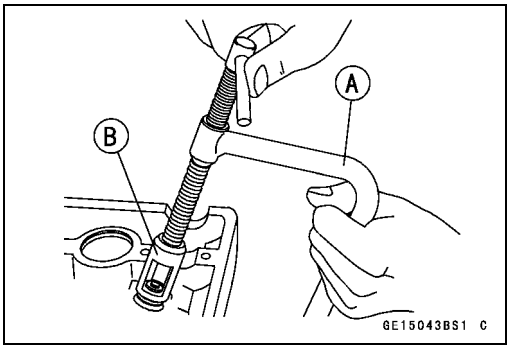

Valve Installation

- Replace the oil seal with a new one.
- Apply engine oil to the oil seal lip.
- Apply a thin coat of molybdenum disulfide grease to the valve stem before valve installation.
- Install the springs so that the closed coil end faces downwards (the side painted in green faces upwards).
  Valve Stem [A]
  Oil Seal [B]
  Spring Seat [C]
  Closed Coil End [D]
  Valve Spring [E]
  Side Painted in Red [F]
  Retainer [G]
  Split Keepers [H]

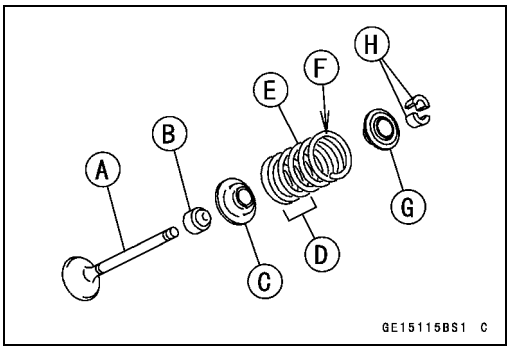

Valve Guide Removal

- Remove:
  Valve (see Valve Removal)
  Oil Seal
  Spring Seat
- Heat the area around the valve guide to 120 ~ 150°C (248 ~ 302°F), and hammer lightly on the valve guide arbor [A] to remove the guide from the top of the head.

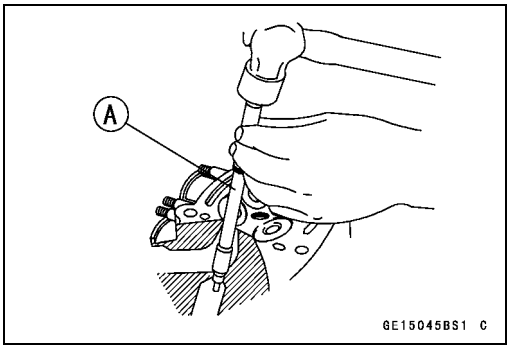

NOTICE

Do not heat the cylinder head with a torch. This will warp the cylinder head. Soak the cylinder head in oil and heat the oil.

Special Tool - Valve Guide Arbor, ϕ4.5: 57001-1331

Valves

Valve Guide Installation

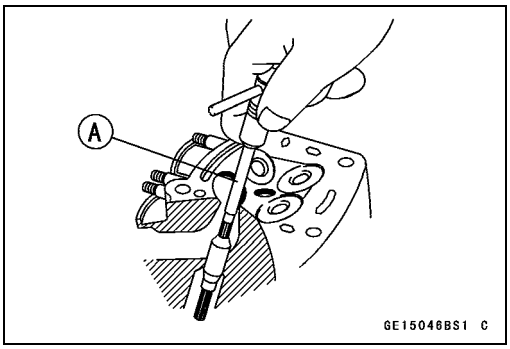

- Apply engine oil to the valve guide outer surface before installation.
- Heat the area around the valve guide hole to about 120 ~ 150°C (248 ~ 302°F).
- Drive the valve guide in from the top of the head using the valve guide arbor. The flange stops the guide from going in too far.

Special Tool - Valve Guide Arbor, ϕ4.5: 57001-1331

- Wait until the cylinder head cools down and then ream the valve guide with the valve guide reamer [A] even if the old guide is reused.

○Turn the reamer in a clockwise direction until the reamer turns freely in the guide. Never turn the reamer counter-clockwise or it will be dulled.

○Once the guides are reamed they must be cleaned thoroughly.

Special Tool - Valve Guide Reamer, ϕ4.5: 57001-1333

Valve-to-Guide Clearance Measurement (Wobble Method)

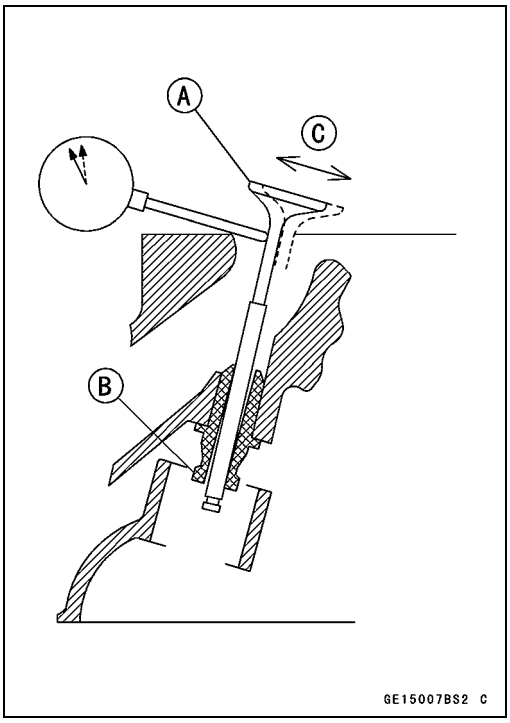

If a small bore gauge is not available, inspect the valve guide wear by measuring the valve to valve guide clearance with the wobble method as indicated below.

- Insert a new valve [A] into the guide [B] and set a dial gauge against the stem perpendicular to it as close as possible to the cylinder head mating surface.
- Move the stem back and forth [C] to measure valve/valve guide clearance.
- Repeat the measurement in a direction at a right angle to the first.

★If the reading exceeds the service limit, replace the guide.

NOTE

○*The reading is not actual valve/valve guide clearance because the measuring point is above the guide.*

Valve/Valve Guide Clearance (Wobble Method)

Standard:

Exhaust	**0.08 ~ 0.16 mm (0.0032 ~ 0.0063 in.)**
Intake	**0.03 ~ 0.10 mm (0.0012 ~ 0.0039 in.)**

Service Limit:

Exhaust	**0.35 mm (0.014 in.)**
Intake	**0.29 mm (0.011 in.)**

Valves

Valve Seat Inspection

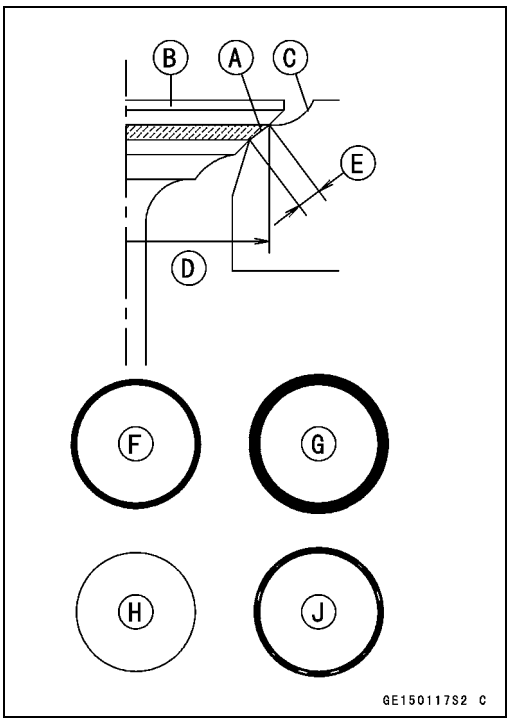

- Remove the valve (see Valve Removal).
- Check the valve seating surface [A] between the valve [B] and valve seat [C].

○Measure the outside diameter [D] of the seating pattern on the valve seat.

★If the outside diameter is too large or too small, repair the seat (see Valve Seat Repair).

Valve Seating Surface Outside Diameter
Standard:

Exhaust	**27.6 ~ 27.8 mm (1.087 ~ 1.094 in.)**
Intake	**32.6 ~ 32.8 mm (1.283 ~ 1.291 in.)**

○Measure the seat width [E] of the portion where there is no build-up carbon (white portion) of the valve seat with a vernier caliper.
Good [F]

★If the width is too wide [G], too narrow [H] or uneven [J], repair the seat (see Valve Seat Repair).

Valve Seating Surface Width
Standard:

Exhaust	**0.8 ~ 1.2 mm (0.03 ~ 0.05 in.)**
Intake	**0.5 ~ 1.0 mm (0.02 ~ 0.04 in.)**

Valve Seat Repair

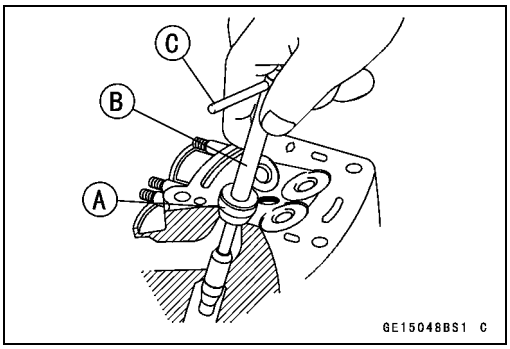

- Repair the valve seat with the valve seat cutters [A].

Special Tools - Valve Seat Cutter Holder Bar [C]: 57001-1128
Valve Seat Cutter Holder, ϕ4.5 [B]: 57001-1330

For Exhaust Valve Seat
Valve Seat Cutter, 45° - ϕ30: 57001-1187
Valve Seat Cutter, 32° - ϕ30: 57001-1120
Valve Seat Cutter, 60° - ϕ30: 57001-1123

For Intake Valve Seat
Valve Seat Cutter, 45° - ϕ35: 57001-1116
Valve Seat Cutter, 32° - ϕ35: 57001-1121
Valve Seat Cutter, 55° - ϕ35: 57001-1247

★If the manufacturer's instructions are not available, use the following procedure.

Valves

Seat Cutter Operation Care

1. This valve seat cutter is developed to grind the valve for repair. Therefore the cutter must not be used for other purposes than seat repair.
2. Do not drop or shock the valve seat cutter, or the diamond particles may fall off.
3. Do not fail to apply engine oil to the valve seat cutter before grinding the seat surface. Also wash off ground particles sticking to the cutter with washing oil.

NOTE

○*Do not use a wire brush to remove the metal particles from the cutter. It will take off the diamond particles.*

4. Setting the valve seat cutter holder in position, operate the cutter in one hand. Do not apply too much force to the diamond portion.

NOTE

○*Prior to grinding, apply engine oil to the cutter and during the operation, wash off any ground particles sticking to the cutter with washing oil.*

5. After use, wash it with washing oil and apply thin layer of engine oil before storing.

Marks Stamped on the Cutter

The marks stamped on the back of the cutter [A] represent the following.

60° ..... Cutter angle [B]

ϕ37.5 ..... Outer diameter of cutter [C]

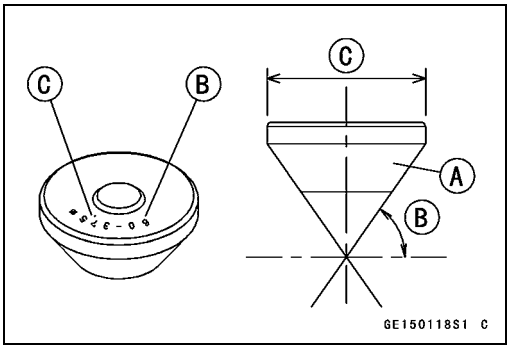

Operating Procedures

- Clean the seat area carefully.
- Coat the seat with machinist's dye.
- Fit a 45° cutter into the holder and slide it into the valve guide.
- Press down lightly on the handle and turn it right or left. Grind the seating surface only until it is smooth.

NOTICE

Do not grind the seat too much. Overgrinding will reduce valve clearance by sinking the valve into the head. If the valve sinks too far into the head, it will be impossible to adjust the clearance, and the cylinder head must be replaced.

- Measure the outside diameter of the seating surface with a vernier caliper.

★If the outside diameter of the seating surface is too small, repeat the 45° grind until the diameter is within the specified range.

Widened Width [A] of engagement by machining with 45° cutter
Ground Volume [B] by 32° cutter
32° [C]
Correct Width [D]
Ground Volume [E] by 60° or 55° cutter
60° or 55° [F]

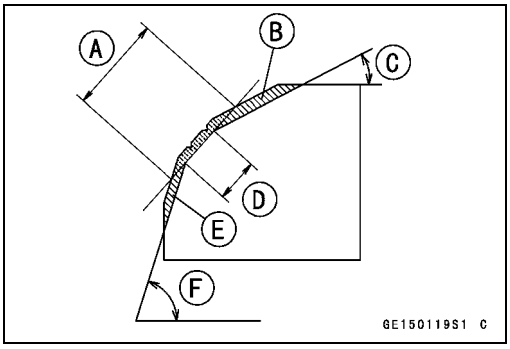

- Measure the outside diameter of the seating surface with a vernier caliper.

★If the outside diameter of the seating surface is too small, repeat the 45° grind [A] until the diameter is within the specified range.

Original Seating Surface [B]

NOTE

○*Remove all pittings of flaws from 45° ground surface.*
○*After grinding with 45° cutter, apply thin coat of machinist's dye to seating surface. This makes seating surface distinct and 32° and 60° (or 55°) grinding operation easier.*
○*When the valve guide is replaced, be sure to grind with 45° cutter for centering and good contact.*

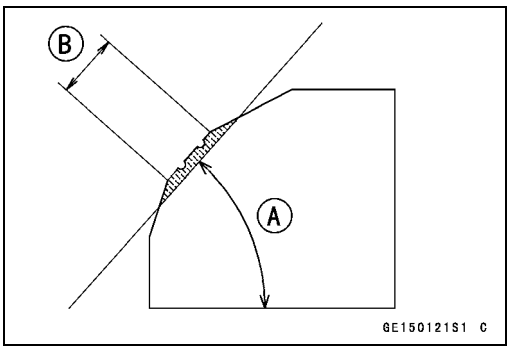

★If the outside diameter [A] of the seating surface is too large, make the 32° grind described below.

★If the outside diameter of the seating surface is within the specified range, measure the seat width as described below.

- Grind the seat at a 32° angle [B] until the seat outside diameter is within the specified range.

○To make the 32° grind, fit a 32° cutter into the holder, and slide it into the valve guide.

○Turn the holder one turn at a time while pressing down very lightly. Check the seat after each turn.

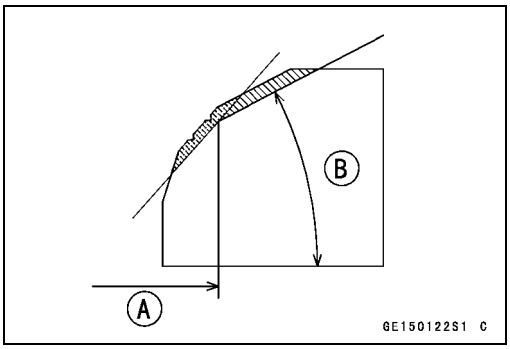

NOTICE

The 32° cutter removes material very quickly. Check the seat outside diameter frequently to prevent overgrinding.

○After making the 32° grind, return to the seat outside diameter measurement step above.

- To measure the seat width, use a vernier caliper to measure the width of the 45° angle portion of the seat at several places around the seat.

★If the seat width is too narrow, repeat the 45° grind until the seat is slightly too wide, and then return to the seat outside diameter measurement step above.

Valves

★If the seat width is too wide, make the 60° or 55° [A] grind described below.
★If the seat width is within the specified range, lap the valve to the seat as described below.
● Grind the seat at a 60° or 55° angle until the seat width is within the specified range.
○To make the 60° or 55° grind, fit 60° or 55° cutter into the holder, and slide it into the valve guide.
○Turn the holder, while pressing down lightly.
○After making the 60° or 55° grind, return to the seat width measurement step above.
Correct Width [B]

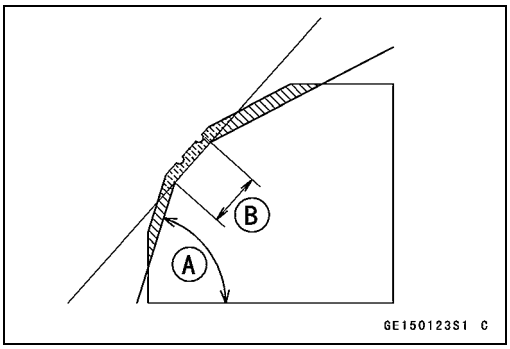

● Lap the valve to the seat, once the seat width and outside diameter are within the ranges specified above.
○Put a little coarse grinding compound on the face of the valve in a number of places around the valve head.
○Spin the valve against the seat until the grinding compound produces a smooth, matched surface on both the seat and the valve.
○Repeat the process with a fine grinding compound.
Lapper [A]
Valve Seat [B]
Valve [C]

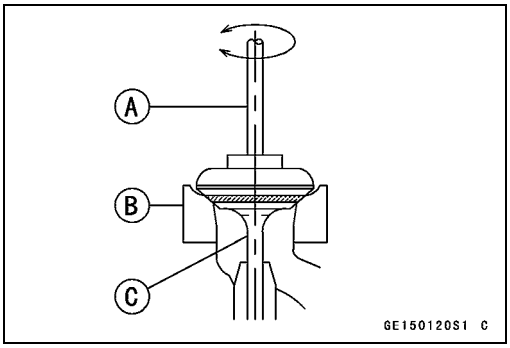

● The seating area should be marked about in the middle of the valve face.
★If the seat area is not in the right place on the valve, check to be sure the valve is the correct part. If it is, it may have been refaced too much; replace it.
● Be sure to remove all grinding compound before assembly.
● When the engine is assembled, be sure to adjust the valve clearance (see Valve Clearance Adjustment in the Periodic Maintenance chapter).

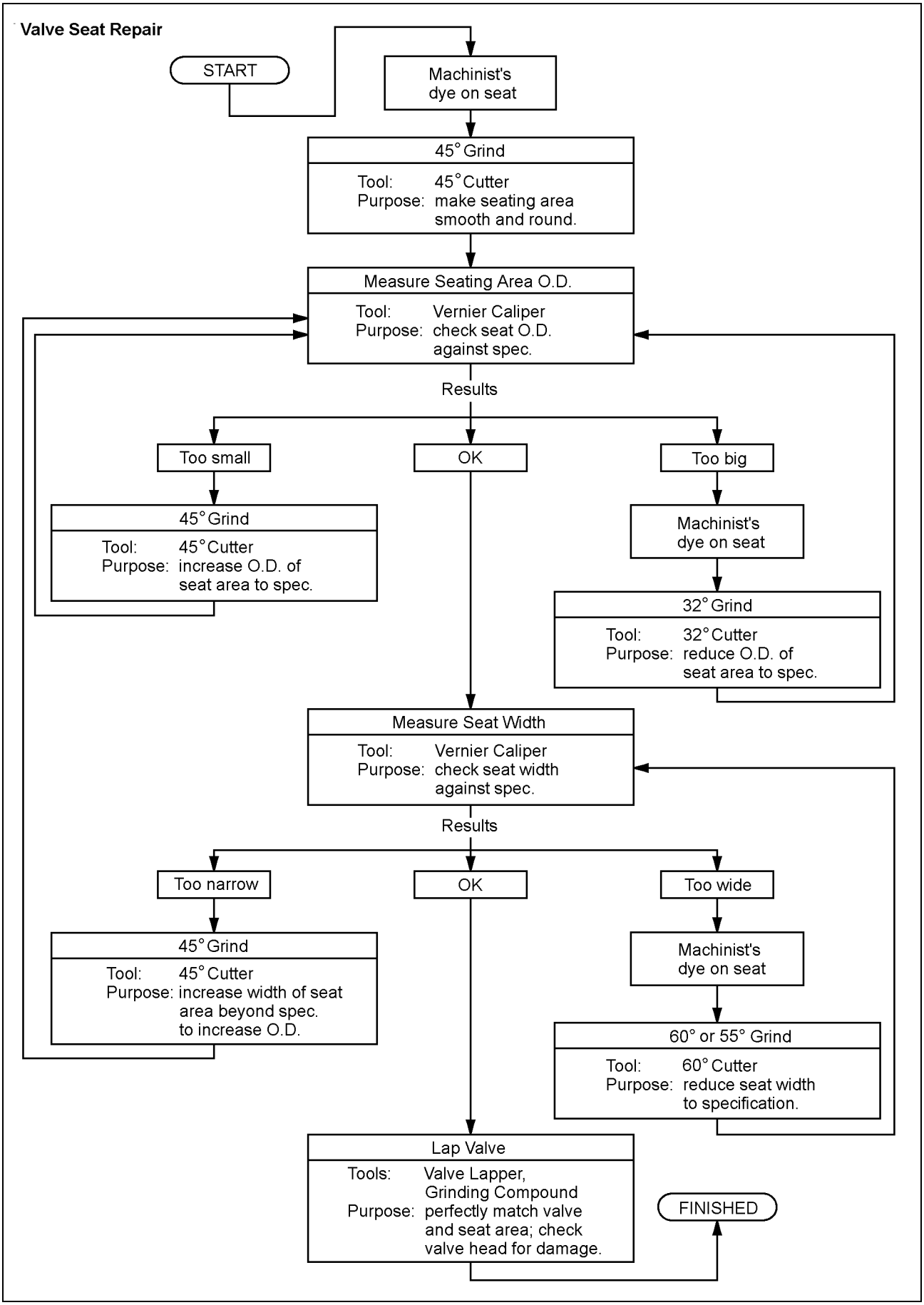
Valve Seat Repair
START
Machinist's dye on seat
45° Grind
Tool: 45° Cutter
Purpose: make seating area smooth and round.
Measure Seating Area O.D.
Tool: Vernier Caliper
Purpose: check seat O.D. against spec.
Results
Too small
OK
Too big
45° Grind
Tool: 45° Cutter
Purpose: increase O.D. of seat area to spec.
Machinist's dye on seat
32° Grind
Tool: 32° Cutter
Purpose: reduce O.D. of seat area to spec.
Measure Seat Width
Tool: Vernier Caliper
Purpose: check seat width against spec.
Results
Too narrow
OK
Too wide
45° Grind
Tool: 45° Cutter
Purpose: increase width of seat area beyond spec. to increase O.D.
Machinist's dye on seat
60° or 55° Grind
Tool: 60° Cutter
Purpose: reduce seat width to specification.
Lap Valve
Tools: Valve Lapper, Grinding Compound
Purpose: perfectly match valve and seat area; check valve head for damage.
FINISHED

Cylinder, Pistons

Cylinder Removal

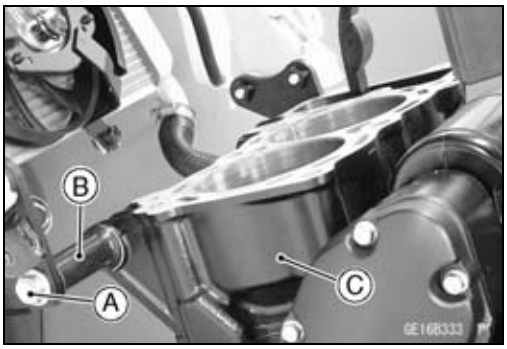

- Remove:
  Cylinder Head (see Cylinder Head Removal)
  Front Engine Mounting Bolts [A] and Nuts (Left and Right)
  Collar [B]
  Cylinder [C]

Cylinder Installation

NOTE

○*If a new cylinder is used, use new piston ring.*

- Be sure that the dowel pins [A] are in position.
- Install a new cylinder gasket.

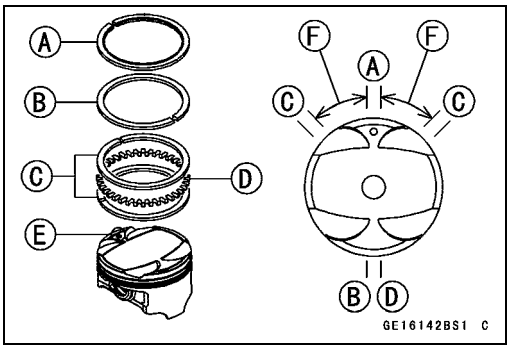

- The piston ring openings must be positioned as shown in the figure. The openings of the oil ring steel rails must be about 30 ~ 40° of angle from the opening of the top ring.
  Top Ring [A]
  Second Ring [B]
  Oil Ring Steel Rails [C]
  Oil Ring Expander [D]
  Dent [E]
  30 ~ 40° [F]

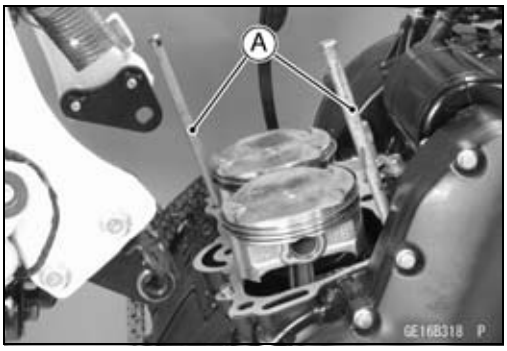

- Apply molybdenum disulfide oil solution to the cylinder bore, piston rings and piston skirt.
- Prepare two auxiliary head bolts [A] with their head cut.

○Install the two bolts diagonally in the crankcase.

- Position the crankshaft so that the piston heads are almost level.
- Install the cylinder block.

○Insert the piston rings with your thumbs.

- Install the cylinder head (see Cylinder Head Installation).
- Install the front engine mounting bolts and nuts (left and right), and tighten them (see Engine Installation in the Engine Removal/Installation chapter).

Cylinder, Pistons

Piston Removal

- Remove the cylinder (see Cylinder Removal).
- Place a clean cloth under the pistons.
- Remove the piston pin snap ring [A] by using the pliers [B] from the outside of each piston.

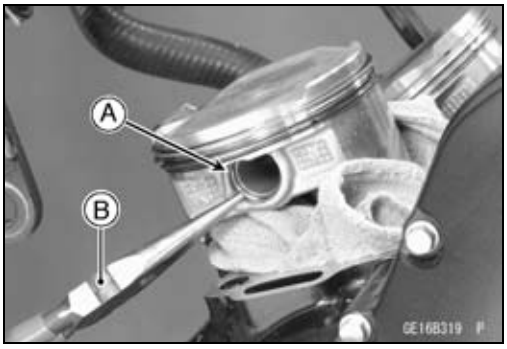

- Remove the piston pins.

Special Tools - Piston Pin Puller [A]: 57001-1568
Piston Pin Puller Adapter, ϕ12 [D]: 57001-1657

Center Bolt [B]
Shell of Piston [C]

- Remove the pistons.

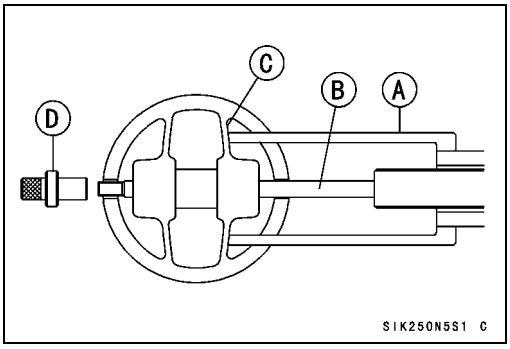

- Carefully spread the ring opening with your thumbs and then push up on the opposite side of the ring [A] to remove it.
- Remove the 3-piece oil ring with your thumbs in the same manner.

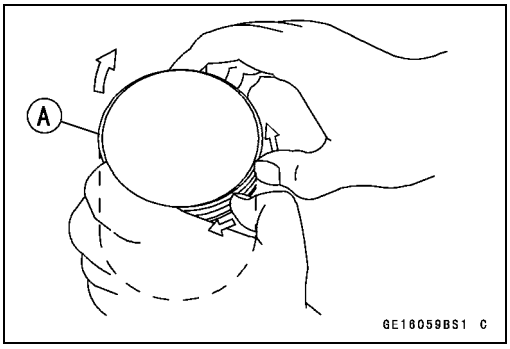

Piston Installation

- Apply molybdenum disulfide oil solution to the oil ring expander, install the oil ring expander [A] in the bottom piston ring groove so the ends [B] butt together.
- Apply molybdenum disulfide oil solution to the oil ring steel rails, and install the oil ring steel rails, one above the expander and one below it.

○Spread the rail with your thumbs, but only enough to fit the rail over the piston.
○Release the rail into the bottom piston ring groove.

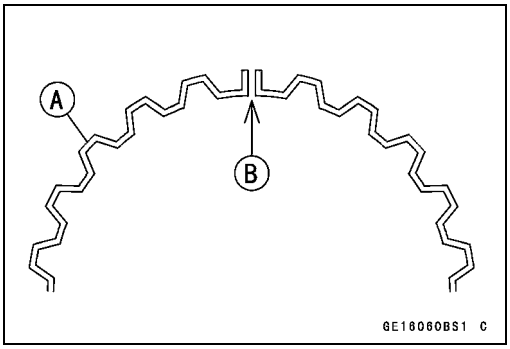

NOTE

○The oil ring rails have no “top” or “bottom”.

Cylinder, Pistons

- Apply molybdenum disulfide oil solution to the top and second rings.
- Do not mix up the top and second ring.
- Install the top ring [A] so that the "R" mark [B] faces up.
- Install the second ring [C] so that the "RN" mark [D] faces up.

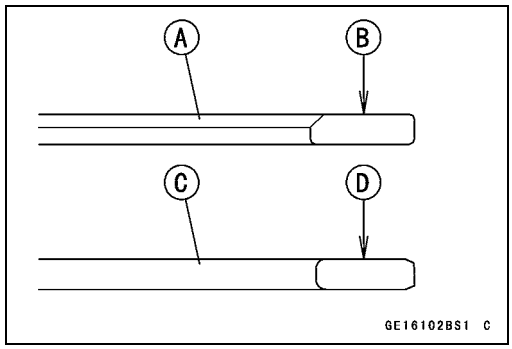

NOTE

○*If a new piston is used, use new piston ring.*

- Install the piston with its dent mark [A] facing forward.

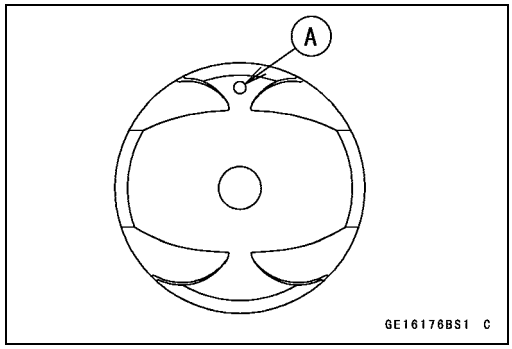

- Fit a new piston pin snap ring into the side of the piston so that the ring opening [A] does not align with the slit [B] of the piston pin hole.

○Apply molybdenum disulfide oil solution to the piston pins and piston skirt.

○When installing the piston pin snap ring, compress it only enough to install it and no more.

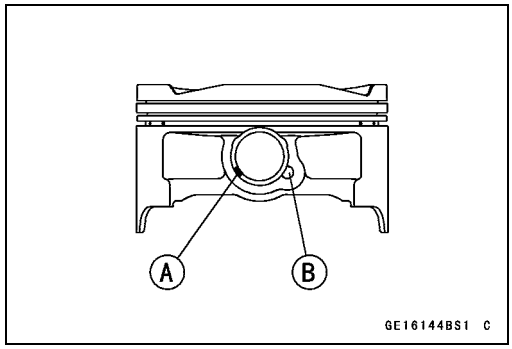

NOTICE

Do not reuse snap rings, as removal weakens and deforms them. They could fall out and score the cylinder wall.

- Install the cylinder (see Cylinder Installation).

Cylinder Wear Inspection

- Since there is a difference in cylinder wear in different directions, take a side-to-side and a front-to-back measurement at each of the two locations (total of four measurements) shown in the figure.

★If any of the cylinder inside diameter measurements exceeds the service limit, replace the cylinder.

10 mm (0.39 in.) [A]
60 mm (2.36 in.) [B]

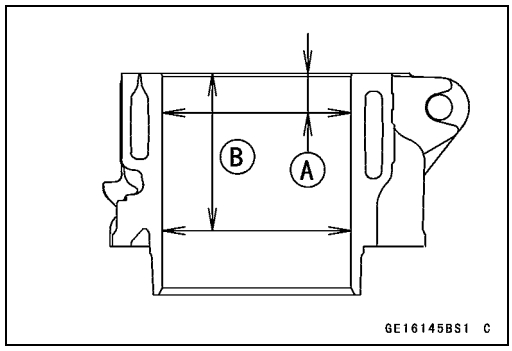

Cylinder Inside Diameter

Standard:	**82.994 ~ 83.006 mm (3.2675 ~ 3.2679 in.)**
Service Limit:	**83.09 mm (3.271 in.)**

Cylinder, Pistons

Piston Wear Inspection

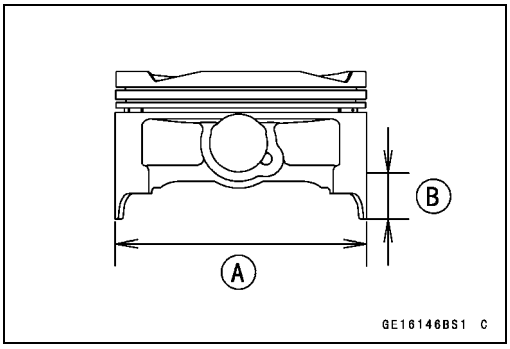

- Measure the outside diameter [A] of each piston 18 mm (0.7087 in.) [B] up from the bottom of the piston at a right angle to the direction of the piston pin.

★If the measurement is under service limit, replace the piston.

Piston Diameter

Standard:	**82.969 ~ 82.984 mm (3.2665 ~ 3.2671 in.)**
Service Limit:	**82.82 mm (3.261 in.)**

Piston Ring, Piston Ring Groove Wear Inspection

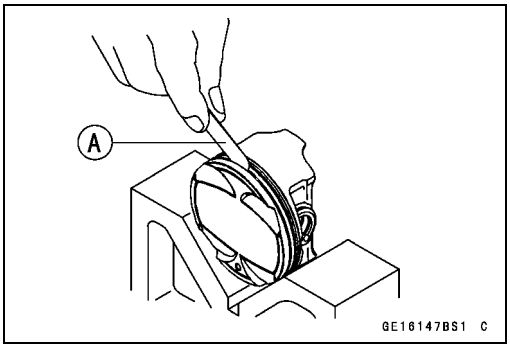

- Check for uneven groove wear by inspecting the ring seating.

★The rings should fit perfectly parallel to groove surfaces. If not, replace the piston and all the piston rings.

- With the piston rings in their grooves, make several measurements with a thickness gauge [A] to determine piston ring/groove clearance.

Piston Ring/Groove Clearance

Standard:	
Top	**0.03 ~ 0.07 mm (0.001 ~ 0.003 in.)**
Second	**0.02 ~ 0.06 mm (0.001 ~ 0.002 in.)**
Service Limit:	
Top	**0.17 mm (0.0067 in.)**
Second	**0.16 mm (0.0063 in.)**

Piston Ring Groove Width Inspection

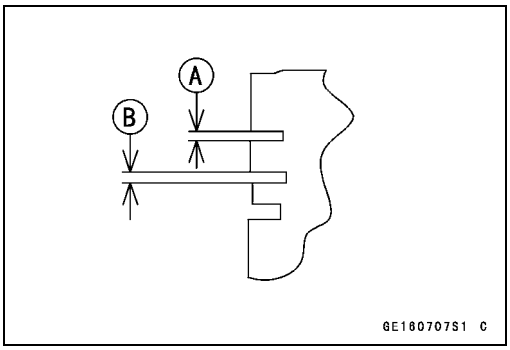

- Measure the piston ring groove width.

○Use a vernier caliper at several points around the piston.

Piston Ring Groove Width

Standard:	
Top [A]	**0.92 ~ 0.94 mm (0.0362 ~ 0.0370 in.)**
Second [B]	**1.01 ~ 1.03 mm (0.0398 ~ 0.0406 in.)**
Service Limit:	
Top	**1.02 mm (0.0402 in.)**
Second	**1.11 mm (0.0437 in.)**

★If the width of any of the two grooves is wider than the service limit at any point, replace the piston.

Cylinder, Pistons

Piston Ring Thickness Inspection

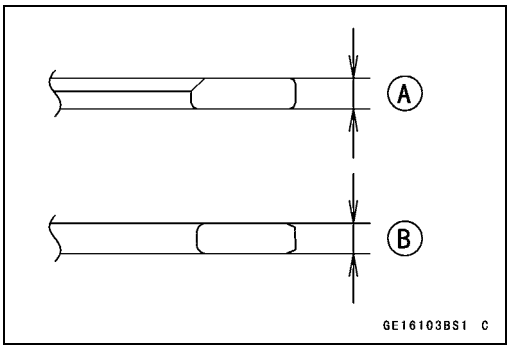

● Measure the piston ring thickness.

○Use the micrometer to measure at several points around the ring.

Piston Ring Thickness

Standard:

Top [A]	**0.87 ~ 0.89 mm (0.0343 ~ 0.0350 in.)**
Second [B]	**0.97 ~ 0.99 mm (0.0382 ~ 0.0390 in.)**

Service Limit:

Top	**0.80 mm (0.031 in.)**
Second	**0.90 mm (0.035 in.)**

★If any of the measurements is less than the service limit on either of the rings, replace all the rings.

NOTE

○*When using new rings in a used piston, check for uneven groove wear. The rings should fit perfectly parallel to the groove sides. If not, replace the piston.*

Piston Ring End Gap Inspection

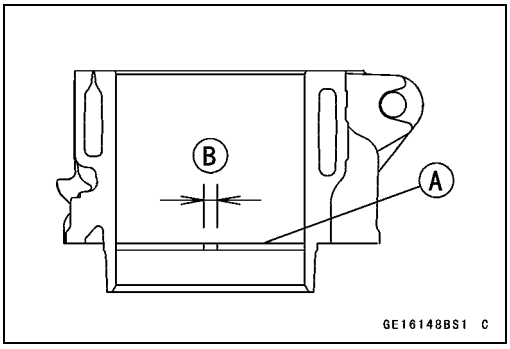

● Place the piston ring [A] inside the cylinder, using the piston to locate the ring squarely in place. Set it close to the bottom of the cylinder, where cylinder wear is low.

● Measure the gap [B] between the ends of the ring with a thickness gauge.

Piston Ring End Gap

Standard:

Top	**0.25 ~ 0.40 mm (0.0098 ~ 0.0157 in.)**
Second	**0.40 ~ 0.55 mm (0.0157 ~ 0.0217 in.)**

Service Limit:

Top	**0.7 mm (0.028 in.)**
Second	**0.9 mm (0.035 in.)**

★If the end gap of either ring is greater than the service limit, replace all the rings.

Throttle Body Assy Holder

Throttle Body Assy Holder Removal

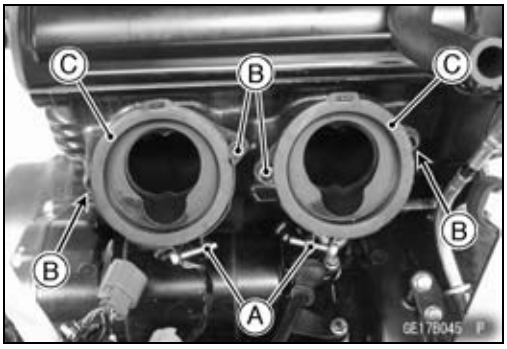

- Remove:
  Throttle Body Assy (see Throttle Body Assy Removal in the Fuel System (DFI) chapter)
  Clamps [A]
  Bolts [B]
  Throttle Body Assy Holders [C]

Throttle Body Assy Holder Installation

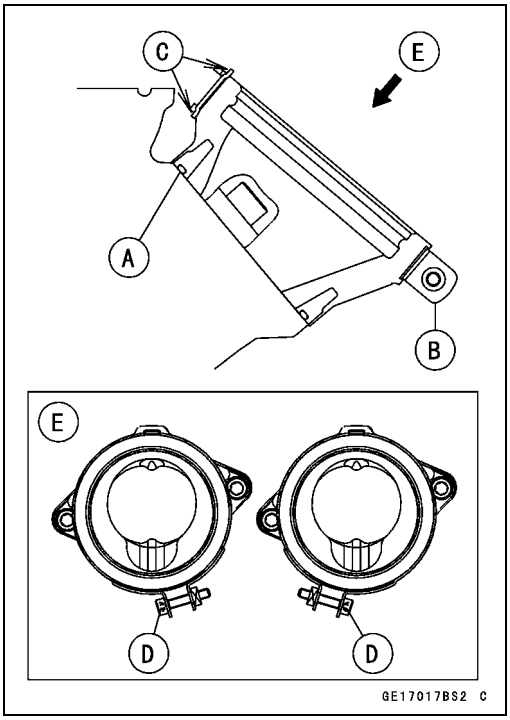

- Replace the O-rings [A] with new ones and apply grease to them.
- Tighten:

  Torque - Throttle Body Assy Holder Bolts: 12 N·m (1.2 kgf·m, 106 in·lb)

- Install the clamps [B] so that their projections [C] fit on the holes of the holders.

○Be sure that the clamp bolt heads [D] face outward.
View from Top [E]

- Install the throttle body assy (see Throttle Body Assy Installation in the Fuel System (DFI) chapter).

Muffler

Muffler Removal

⚠ WARNING

The muffler can become extremely hot during normal operation and cause severe burns. Do not remove the muffler while it is hot.

- Remove:
  Frame Covers (see Frame Cover Removal in the Frame chapter)
  Right Footpeg Stay (see Footpeg Stay Removal in the Frame chapter)
  Middle Fairings (see Middle Fairing Removal in the Frame chapter)
- For oxygen sensor equipped models, remove the engine sprocket cover (see Engine Sprocket Removal in the Final Drive chapter) to disconnect the connector [A] and clear the lead from the clamp [B].

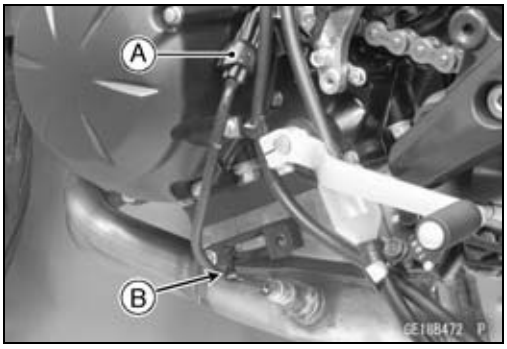

NOTICE

Do not pull strongly, twist, or bend the oxygen sensor lead. This may cause the wiring open.

- Remove the exhaust pipe manifold holder nuts [A].

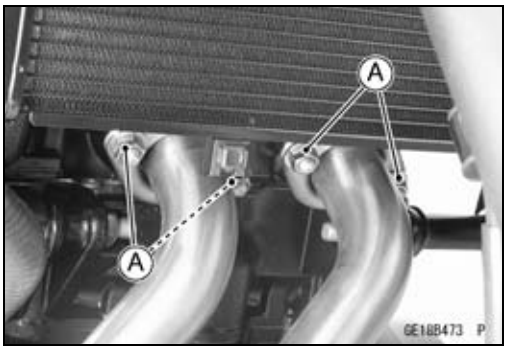

- Remove:
  Muffler Body Mounting Bolts [A]
  Muffler Body Mounting Nut [B]
  Muffler [C]

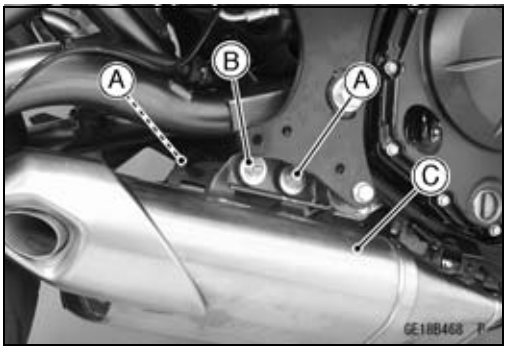

Muffler

Muffler Installation

● Installation is the reverse of removal.

○Replace the exhaust pipe gaskets [A] with new ones.

○Tighten:

Torque - Exhaust Pipe Manifold Holder Nuts: 17 N·m (1.7 kgf·m, 13 ft·lb)
Muffler Body Mounting Bolts [B]: 20 N·m (2.0 kgf·m, 15 ft·lb)

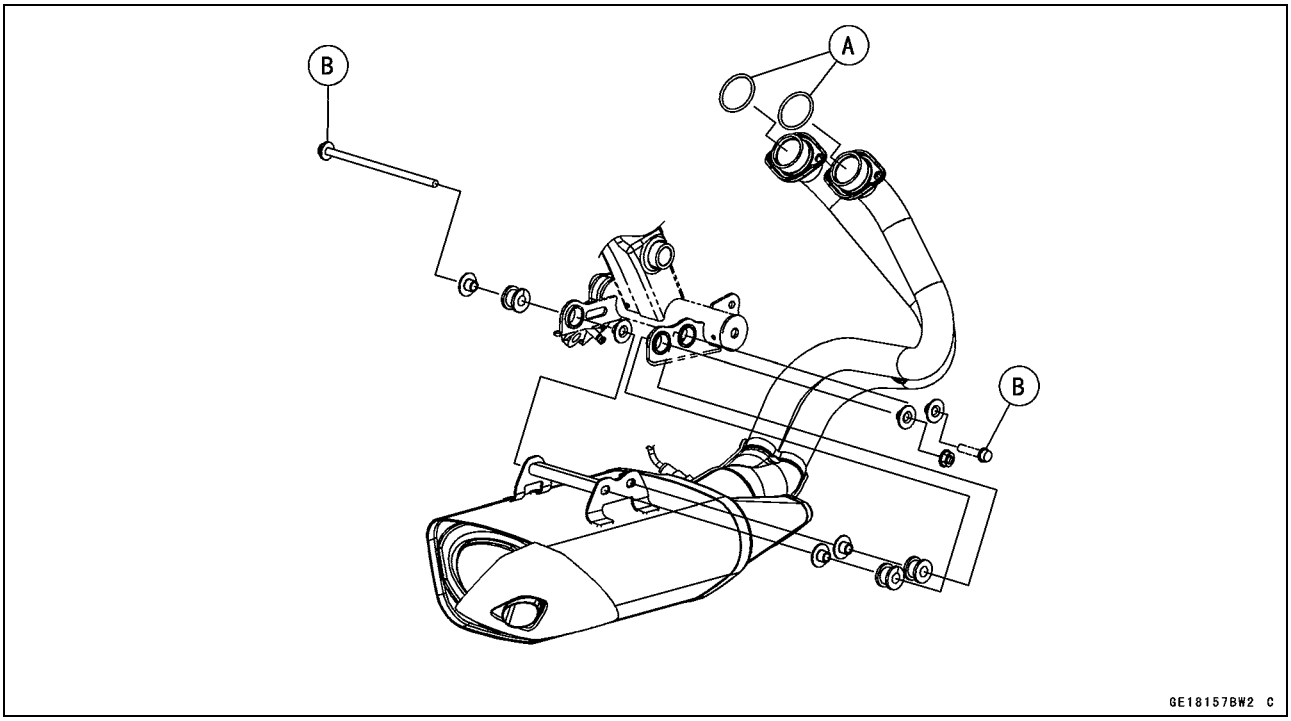

○For oxygen sensor equipped models, route its lead correctly (see Cable, Wire, and Hose Routing section in the Appendix chapter).

○Thoroughly warm up the engine, wait until the engine cools down, and retighten all the bolts and nuts.

Clutch

Table of Contents

Exploded View 6-2
Specifications 6-4
Special Tools and Sealant 6-5
Clutch Lever and Cable 6-6
- Clutch Lever Free Play Inspection 6-6
- Clutch Lever Free Play Adjustment 6-6
- Clutch Cable Removal 6-6
- Clutch Cable Installation 6-6
- Clutch Cable Lubrication 6-7
- Clutch Lever Installation 6-7
- Clutch Lever Adjustment 6-7

Clutch Cover 6-8
- Clutch Cover Removal 6-8
- Clutch Cover Installation 6-8
- Release Shaft Removal 6-9
- Release Shaft Installation 6-9
- Clutch Cover Disassembly 6-9
- Clutch Cover Assembly 6-10

Clutch 6-11
- Clutch Removal 6-11
- Clutch Installation 6-12
- Clutch Plate, Wear, Damage Inspection 6-14
- Clutch Plate Warp Inspection 6-14
- Clutch Spring Free Length Measurement 6-14
- Clutch Housing Finger Inspection 6-14
- Clutch Housing Spline Inspection 6-15

Exploded View

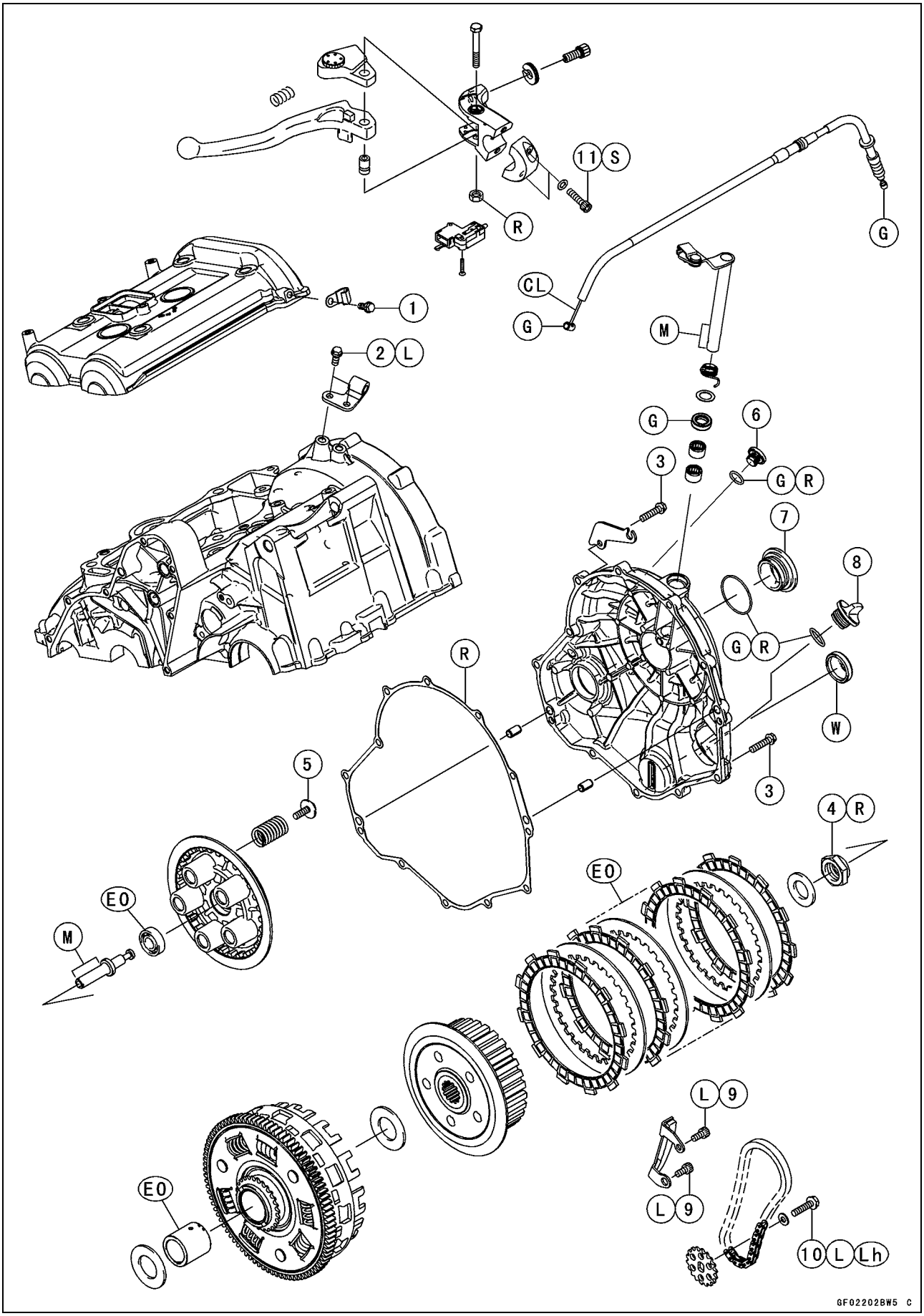

Exploded View

No.	Fastener	Torque			Remarks
		N·m	kgf·m	ft·lb	
1	Clutch Cable Clamp Bracket Bolt	9.8	1.0	87 in·lb	
2	Clutch Cable Holder Bolts	9.8	1.0	87 in·lb	L
3	Clutch Cover Bolts	9.8	1.0	87 in·lb	
4	Clutch Hub Nut	130	13.3	96	R
5	Clutch Spring Bolts	9.8	1.0	87 in·lb	
6	Timing Inspection Cap	3.9	0.40	35 in·lb	
7	Timing Rotor Bolt Cap	4.9	0.50	43 in·lb	
8	Oil Filler Plug	–	–	–	Hand-tighten
9	Oil Pump Chain Guide Bolts	12	1.2	106 in·lb	L
10	Oil Pump Sprocket Bolt	12	1.2	106 in·lb	L, Lh
11	Clutch Lever Clamp Bolts	7.8	0.80	69 in·lb	S

CL: Apply cable lubricant.
EO: Apply engine oil.
G: Apply grease.
L: Apply a non-permanent locking agent.
Lh: Left-hand Threads
M: Apply molybdenum disulfide grease.
R: Replacement Parts
S: Follow the specified tightening sequence.
W: Apply water.

Specifications

Item	Standard	Service Limit
Clutch Lever		
Clutch Lever Free Play	2 ~ 3 mm (0.08 ~ 0.12 in.)	– – –
Clutch		
Friction Plate Thickness	2.92 ~ 3.08 mm (0.115 ~ 0.121 in.)	2.7 mm (0.106 in.)
Friction Plate Warp	0.15 mm (0.059 in.) or less	0.3 mm (0.012 in.)
Steel Plate Warp	0.2 mm (0.008 in.) or less	0.3 mm (0.012 in.)
Clutch Spring Free Length	33.60 mm (1.323 in.)	32.6 mm (1.28 in.)

Special Tools and Sealant

Clutch Holder:
57001-1243

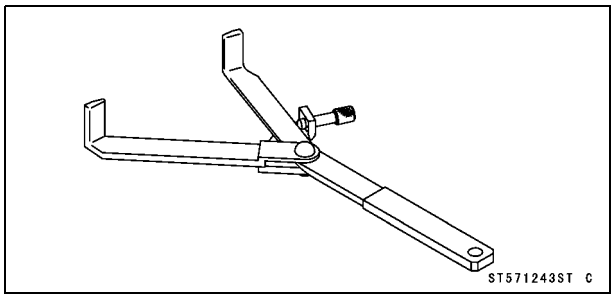

Filler Cap Driver:
57001-1454

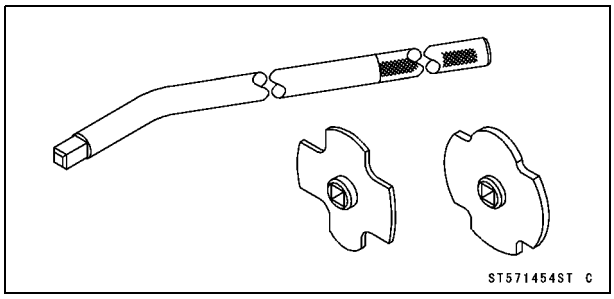

Liquid Gasket, TB1211F:
92104-0004

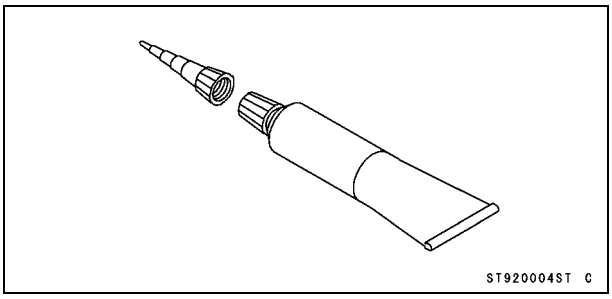

Clutch Lever and Cable

Clutch Lever Free Play Inspection

- Refer to the Clutch Operation Inspection in the Periodic Maintenance chapter.

Clutch Lever Free Play Adjustment

- Refer to the Clutch Operation Inspection in the Periodic Maintenance chapter.

Clutch Cable Removal

- Remove the right middle fairing (see Middle Fairing Removal in the Frame chapter).
- Open the clamp [A].
- Slide the dust cover [B] out of place.
- Loosen the locknut [C], and turn the adjusting nut [D] to give the cable plenty of play.

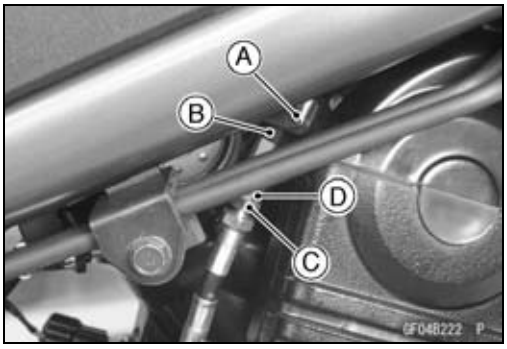

- Screw in the adjuster [A].
- Line up the slots [B] in the clutch lever [C] and adjuster, and then free the cable from the lever.

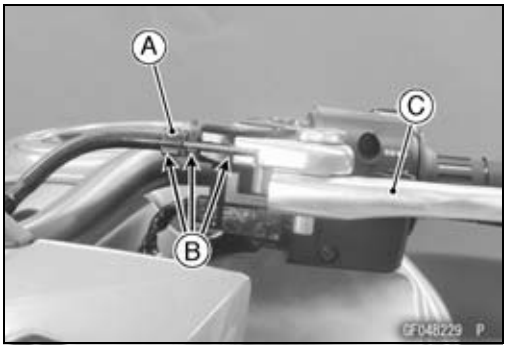

- Remove:
  Bolt [A]
  Idle Speed Adjusting Screw Holder [B]
  Clutch Cable Holder Bolts [C]
  Clutch Cable Lower End [D]
- Pull the clutch cable out of the frame.

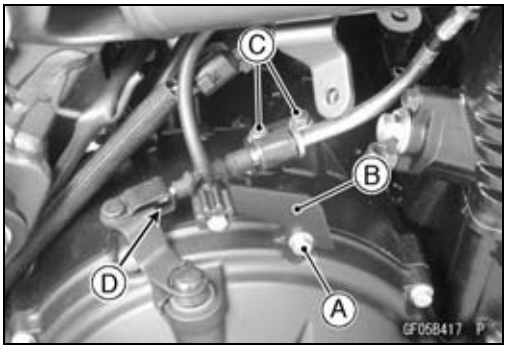

Clutch Cable Installation

- Installation is the reverse of removal.

○Run the clutch cable correctly (see Cable, Wire, and Hose Routing section in the Appendix chapter).

○Install the clutch cable lower end to the clutch cable holder.

○Apply a non-permanent locking agent to the clutch cable holder bolts.

○Tighten:

Torque - Clutch Cable Holder Bolts: 9.8 N·m (1.0 kgf·m, 87 in·lb)

○Install the idle speed adjusting screw holder and tighten the bolt.

Torque - Clutch Cover Bolt: 9.8 N·m (1.0 kgf·m, 87 in·lb)

- Adjust the clutch cable (see Clutch Operation Inspection in the Periodic Maintenance chapter).

Clutch Lever and Cable

Clutch Cable Lubrication

- Refer to the Chassis Parts Lubrication in the Periodic Maintenance chapter.

Clutch Lever Installation

- Install the clutch lever so that the mating surface [A] of the clutch lever clamp is aligned with the punch mark [B].
- Tighten the upper clamp bolt first, and then the lower clamp bolt.

○There will be a gap at the lower part of the clamp after tightening.

Torque - Clutch Lever Clamp Bolts: 7.8 N·m (0.80 kgf·m, 69 in·lb)

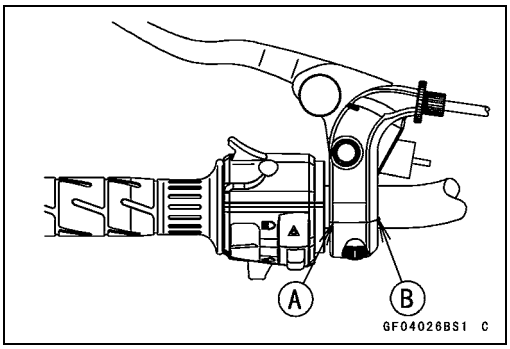

Clutch Lever Adjustment

The adjuster has 5 positions so that the clutch lever position can be adjusted to suit the operator's hand.

- Push the lever forward and turn the adjuster [A] to align the number with the arrow mark [B] on the lever holder.

○The distance from the grip to the lever is minimum at number 5 and maximum at number 1.

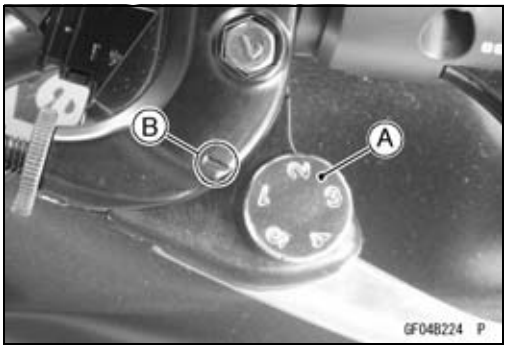

Clutch Cover

Clutch Cover Removal

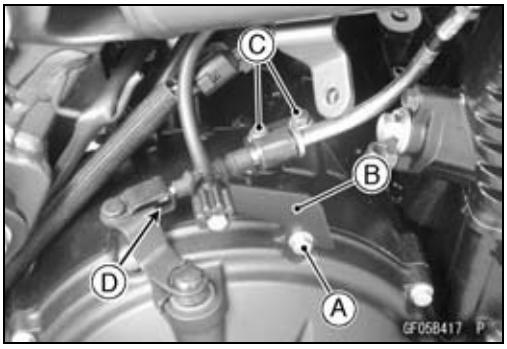

- Drain the engine oil (see Engine Oil Change in the Periodic Maintenance chapter).
- Remove:
  Right Frame Cover (see Frame Cover Removal in the Frame chapter)
  Right Middle Fairing (see Middle Fairing Removal in the Frame chapter)
  Bolt [A]
  Idle Speed Adjusting Screw Holder [B]
  Clutch Cable Holder Bolts [C]
  Clutch Cable Lower End [D]

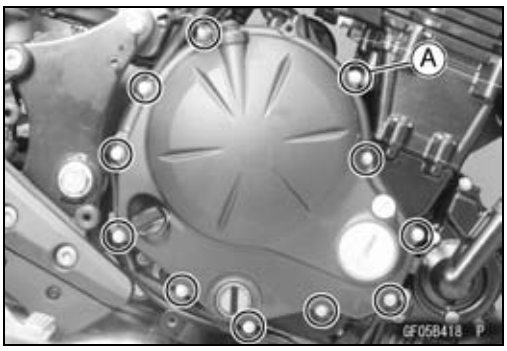

- Remove the clutch cover bolts [A].

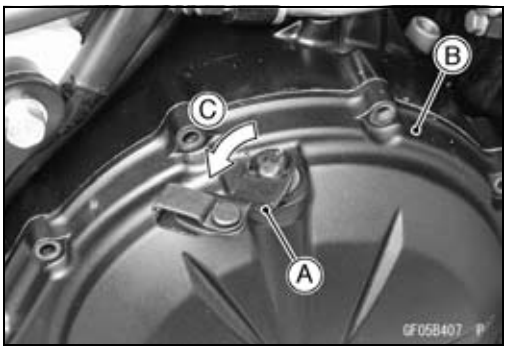

- Turn the release lever [A] counterclockwise, and remove the clutch cover [B].
  About 90° [C]

Clutch Cover Installation

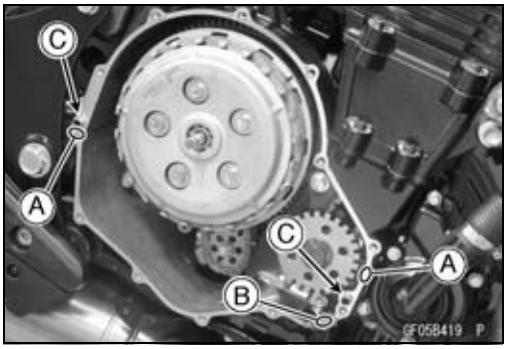

- Clean off any oil or dirt and apply liquid gasket to the following areas.
  Crankcase Halves Mating Surface [A]
  Crankshaft Sensor Lead Grommet [B]

  Sealant - Liquid Gasket, TB1211F: 92104-0004
- Be sure that the dowel pins [C] are in position.
- Replace the clutch cover gasket with a new one.
- Install the clutch cover.
- Install the clutch cable lower end to the clutch cable holder.
- Apply a non-permanent locking agent to the clutch cable holder bolts.
- Tighten:

  Torque - Clutch Cable Holder Bolts: 9.8 N·m (1.0 kgf·m, 87 in·lb)
- Install the idle speed adjusting screw holder.
- Tighten:

  Torque - Clutch Cover Bolts: 9.8 N·m (1.0 kgf·m, 87 in·lb)
- Install the removed parts (see appropriate chapters).

Clutch Cover

Release Shaft Removal

NOTICE

Do not remove the clutch release lever and shaft assembly unless it is absolutely necessary. If removed, the oil seal replacement may be required.

- Remove the clutch cover (see Clutch Cover Removal).
- Pull the lever and shaft assembly [A] straight out of the clutch cover.

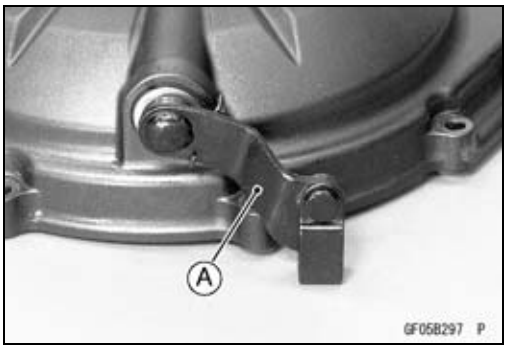

Release Shaft Installation

- Apply grease to the oil seal lips on the upper ridge of the clutch cover.
- Apply molybdenum disulfide grease to the pusher-holding portion [A] on the release shaft.
- Install the washer [B] and spring [C].

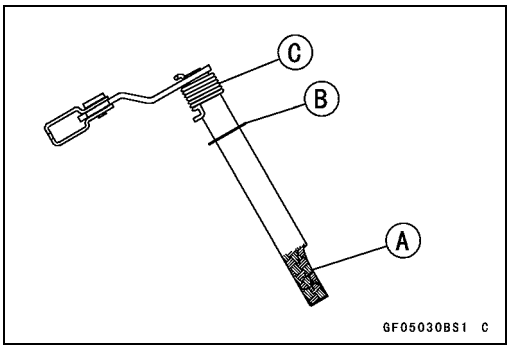

- Insert the release shaft [A] straight into the upper hole of the clutch cover [B].

NOTICE

When inserting the release shaft, be careful not to remove the spring of the oil seal.

- Fit the spring ends [C] as shown in the figure.

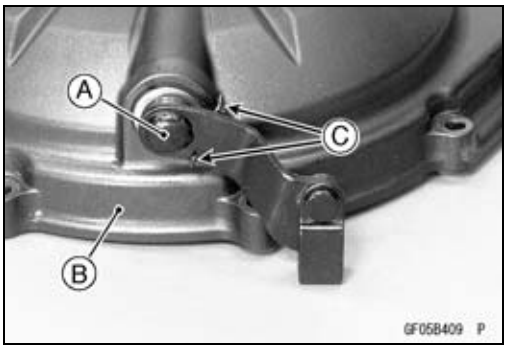

Clutch Cover Disassembly

- Remove:
  Clutch Cover (see Clutch Cover Removal)
  Release Lever and Shaft Assembly (see Release Shaft Removal)
  Oil Seal [A]
  Needle Bearings [B]

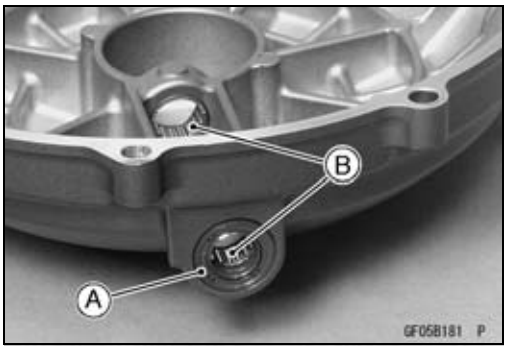

- Remove:
  Oil Level Inspection Window [A]
  Timing Inspection Cap [B]
  Timing Rotor Bolt Cap [C]
  Oil Filler Plug [D]

  Special Tool - Filler Cap Driver: 57001-1454

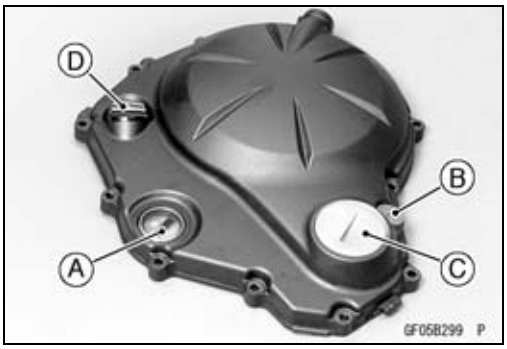

Clutch Cover

Clutch Cover Assembly

- Replace the needle bearings [A] and oil seal [B] with new ones.

NOTE

○*Install the needle bearings so that the manufacture's mark face out.*

- Install the needle bearings and oil seal as shown.

○Press [C] the bearings so that the bearing surface [D] are flush with the housing end [E] of clutch cover.

- Apply grease to the oil seal lips.

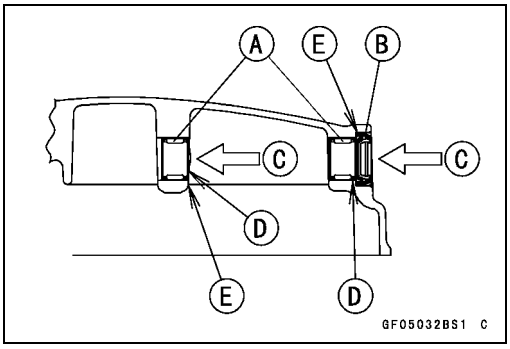

- Apply water to the rubber of the oil level inspection window [A] and press [B] it so that the ring [C] face outside.
- Replace the O-rings of the following parts with new ones.
  Timing Inspection Cap
  Timing Rotor Bolt Cap
  Oil Filler Plug
- Apply grease to the new O-rings.
- Tighten:

Torque - Timing Inspection Cap: 3.9 N·m (0.40 kgf·m, 35 in·lb)
Timing Rotor Bolt Cap: 4.9 N·m (0.50 kgf·m, 43 in·lb)
Oil Filler Plug: Hand-tighten

Special Tool - Filler Cap Driver: 57001-1454

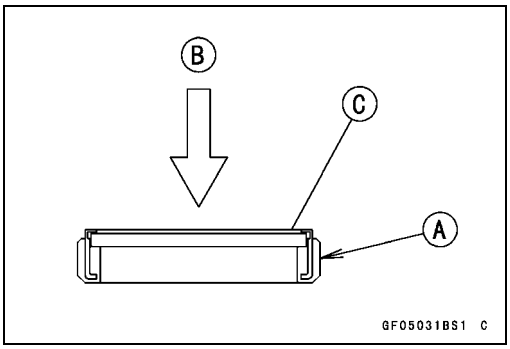

Clutch

Clutch Removal

- Remove:
  Clutch Cover (see Clutch Cover Removal)
  Clutch Spring Bolts and Washers [A]
  Clutch Springs
  Clutch Spring Plate [B] (with Bearing)
  Pusher [C]
  Friction Plates
  Steel Plates

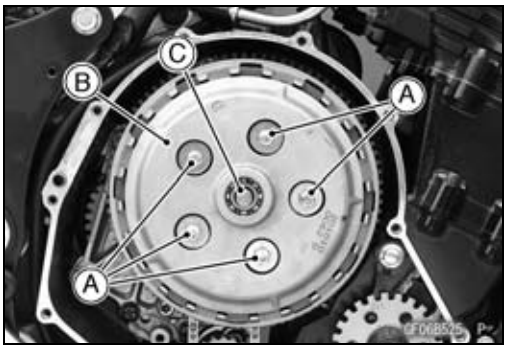

- Hold the clutch hub [A] steady with the clutch holder [B], and remove the clutch hub nut [C] and washer [D].

  Special Tool - Clutch Holder: 57001-1243

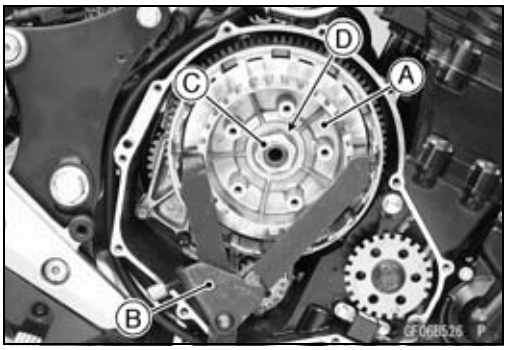

- Remove:
  Clutch Hub [A]
  Spacer [B]

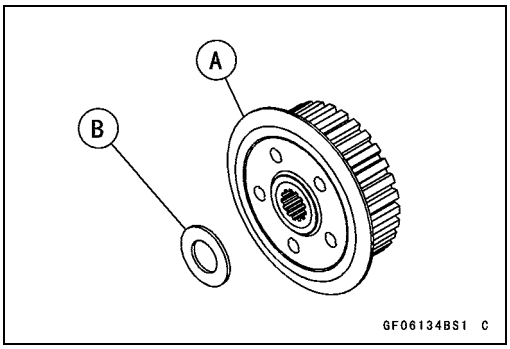

- Remove the oil pump sprocket bolt [A] and washer.

NOTE

○*The oil pump sprocket bolt has a left-hand threads.*

- Using the holes [B], pull out the sleeve [C].
- Remove the following as a set.
  Clutch Housing [D]
  Oil Pump Chain [E]
  Oil Pump Sprocket [F]

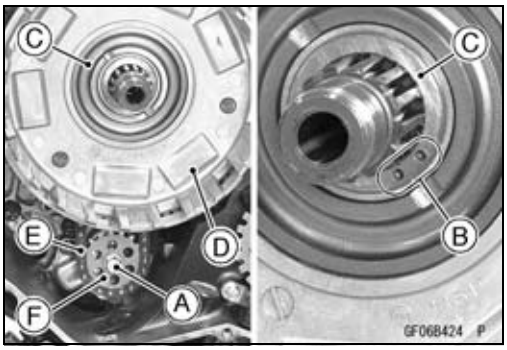

- Remove:
  Spacer [A]
  Bolts [B]
  Oil Pump Chain Guide [C]

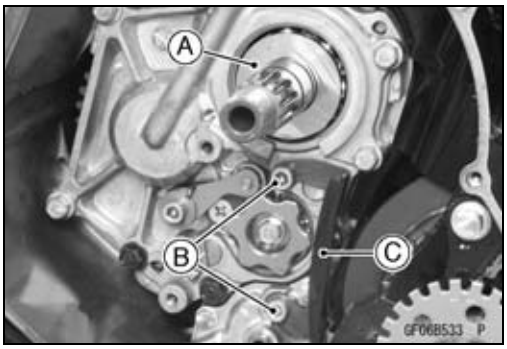

Clutch Installation

- Install the oil pump chain guide [A].
- Apply a non-permanent locking agent to the upper chain guide bolts [B].
- Tighten:

  Torque - Oil Pump Chain Guide Bolts: 12 N·m (1.2 kgf·m, 106 in·lb)

- Install the spacer [C] onto the drive shaft.

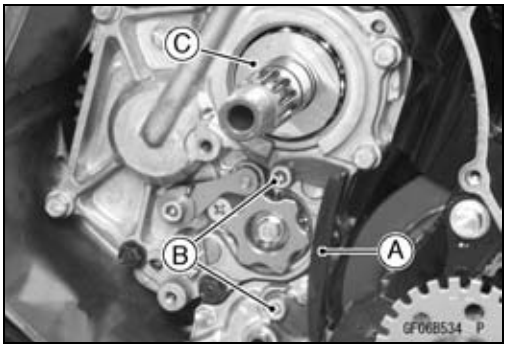

- Put the oil pump chain [A] on the clutch housing gear [B] and the oil pump sprocket [C].

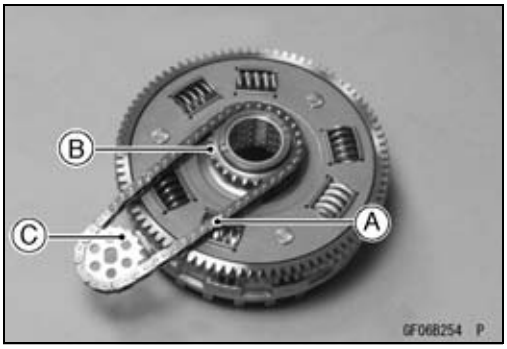

- Install the following on the drive shaft as a set.
  Clutch Housing [A]
  Oil Pump Chain [B]
  Oil Pump Sprocket [C]
- Apply engine oil to the sleeve [D].
- Install the sleeve so that the holes [E] face outward.

★If you feel a catch when installing the sleeve, replace it with a new one.

- Align the hole on the oil pump sprocket with the oil pump shaft.
- Apply a non-permanent locking agent to the oil pump sprocket bolt [F] and install the washer.
- Tighten:

  Torque - Oil Pump Sprocket Bolt: 12 N·m (1.2 kgf·m, 106 in·lb)

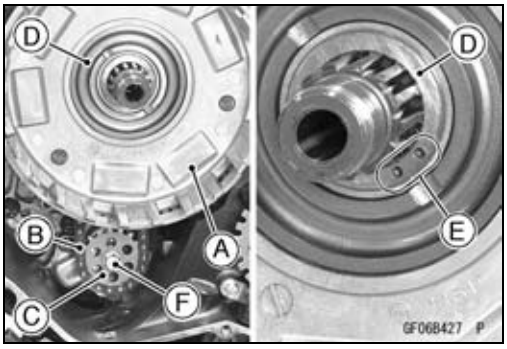

NOTE

○*The oil pump sprocket bolt has a left-hand threads.*

- Install the following parts onto the drive shaft.
  Spacer [A]
  Clutch Hub [B]

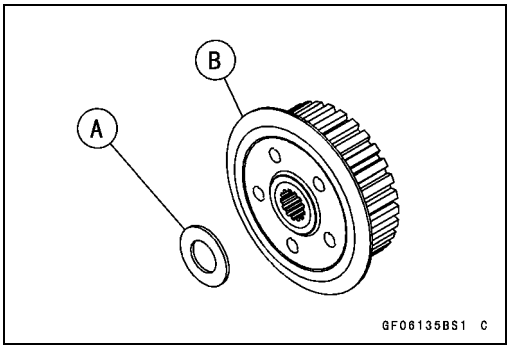

Clutch

- Install the washer so that the OUT SIDE mark [A] faces outward.

- Replace the clutch hub nut [A] with a new one.
- Hold the clutch hub [B] steady with the clutch holder [C], and tighten the clutch hub nut.

  Special Tool - Clutch Holder: 57001-1243

  Torque - Clutch Hub Nut: 130 N·m (13.3 kgf·m, 96 ft·lb)

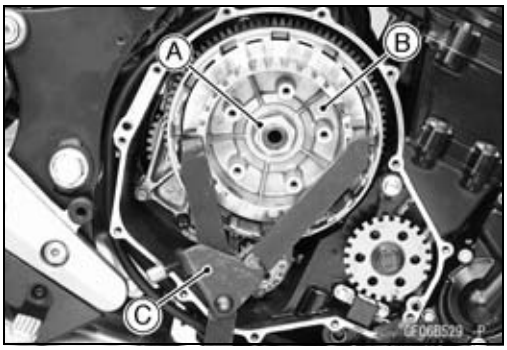

- Install the friction plates and steel plates, starting with a friction plate and alternating them.

NOTICE
If new dry friction plates and steel plates are installed, apply engine oil to the surfaces of each plate to avoid clutch plate seizure.

○Install the last friction plate [A] fitting the tangs [B] in the grooves in the housing as shown in the figure.

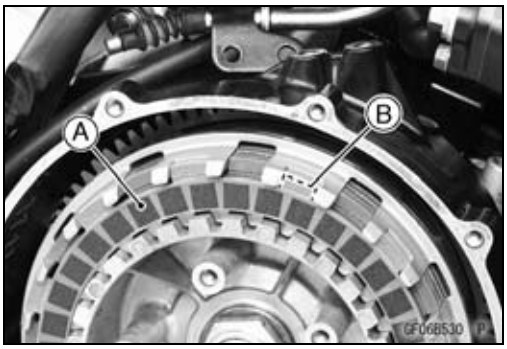

- Apply molybdenum disulfide grease to the pusher end [A].
- Install the pusher [B] into the drive shaft [C].

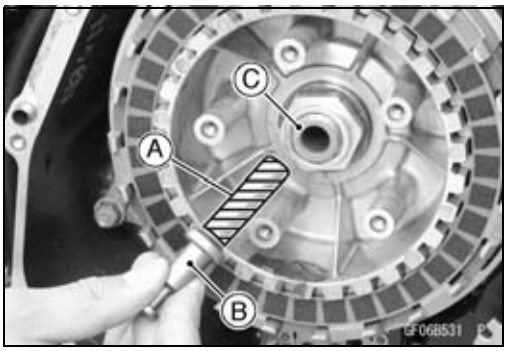

- Apply engine oil to the sliding surfaces of the bearing [A].
- Install the spring plate [B] on the clutch hub [C].
- Install:
  Clutch Springs
  Clutch Spring Bolts and Washers
- Tighten:

  Torque - Clutch Spring Bolts: 9.8 N·m (1.0 kgf·m, 87 in·lb)
- Install the clutch cover (see Clutch Cover Installation).

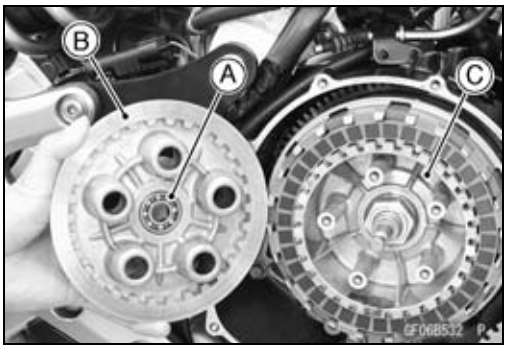

Clutch

Clutch Plate, Wear, Damage Inspection

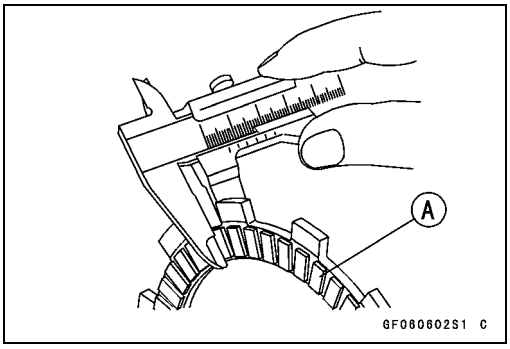

- Visually inspect the friction and steel plates for signs of seizure, overheating (discoloration), or uneven wear.
- Measure the thickness of each friction plate [A] at several points.

★If any plates show signs of damage, or if they have worn past the service limit, replace them with new ones.

Friction Plate Thickness

Standard:	**2.92 ~ 3.08 mm (0.115 ~ 0.121 in.)**
Service Limit:	**2.7 mm (0.106 in.)**

Clutch Plate Warp Inspection

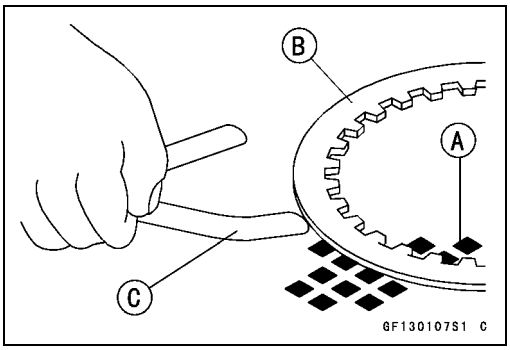

- Place each friction plate or steel plate on a surface plate and measure the gap between the surface plate [A] and each friction plate or steel plate [B] with a thickness gauge [C]. The gap is the amount of friction or steel plate warp.

★If any plate is warped over the service limit, replace it with a new one.

Friction Plate Warp

Standard:	**0.15 mm (0.0059 in.) or less**
Service Limit:	**0.3 mm (0.012 in.)**

Steel Plate Warp

Standard:	**0.2 mm (0.008 in.) or less**
Service Limit:	**0.3 mm (0.012 in.)**

Clutch Spring Free Length Measurement

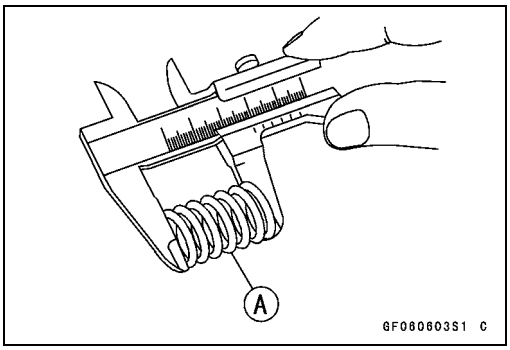

- Measure the free length of the clutch springs [A].

★If any spring is shorter than the service limit, replace it with a new one.

Clutch Spring Free Length

Standard:	**33.60 mm (1.323 in.)**
Service Limit:	**32.6 mm (1.28 in.)**

Clutch Housing Finger Inspection

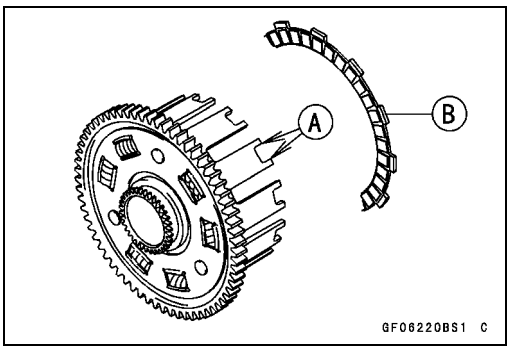

- Visually inspect the clutch housing fingers [A] where the friction plate tangs [B] hit.

★If they are badly worn or if there are groove cuts where the tangs hit, replace the housing. Also, replace the friction plates if their tangs are damaged.

Clutch

Clutch Housing Spline Inspection

- Visually inspect where the teeth [A] on the steel plates wear against the clutch hub splines [B].

★If there are notches worn into the splines, replace the clutch hub. Also, replace the steel plates if their teeth are damaged.

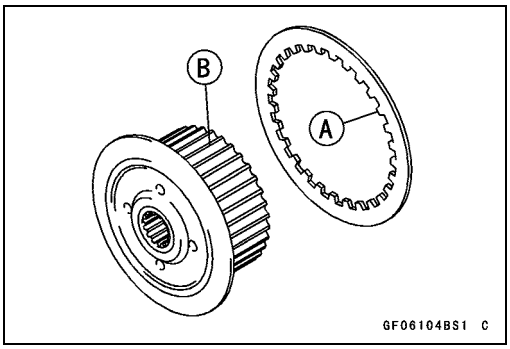

Engine Lubrication System

Table of Contents

Exploded View 7-2
Engine Oil Flow Chart 7-4
Specifications 7-6
Special Tools and Sealant 7-7
Engine Oil and Oil Filter 7-8
    Oil Level Inspection 7-8
    Engine Oil Change 7-8
    Oil Filter Replacement 7-8
Oil Pan 7-9
    Oil Pan Removal 7-9
    Oil Pan Installation 7-10
Oil Pressure Relief Valve 7-12
    Oil Pressure Relief Valve Removal 7-12
    Oil Pressure Relief Valve Installation 7-12
    Oil Pressure Relief Valve Inspection 7-12
Oil Pump 7-13
    Oil Pump Removal 7-13
    Oil Pump Installation 7-14
Oil Pressure Measurement 7-16
    Oil Pressure Measurement 7-16
Oil Pressure Switch 7-17
    Oil Pressure Switch Removal 7-17
    Oil Pressure Switch Installation 7-17

Exploded View

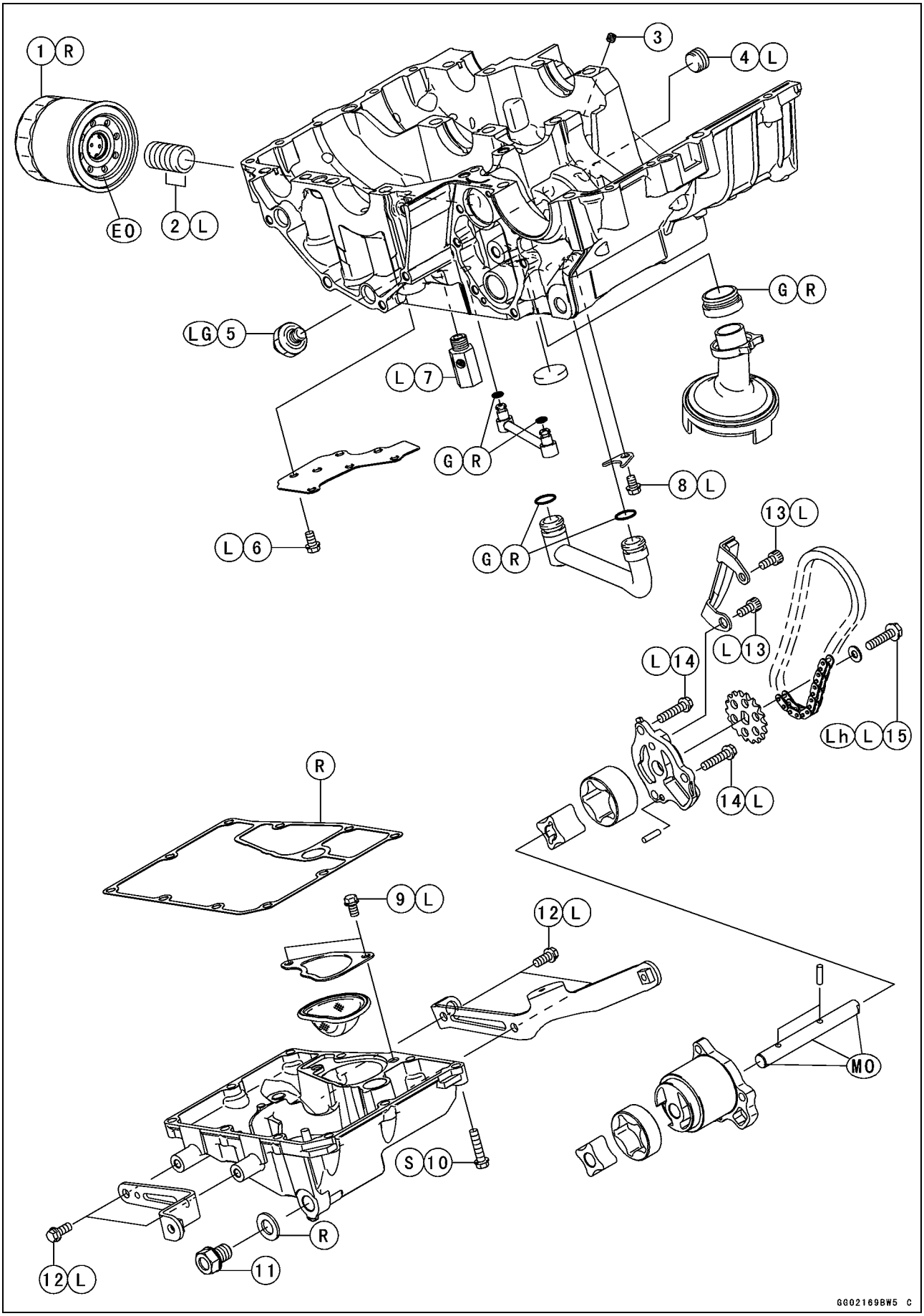

Exploded View

No.	Fastener	Torque			Remarks
		N·m	kgf·m	ft·lb	
1	Oil Filter	17.5	1.8	13	EO, R
2	Holder Mounting Bolt	25	2.5	18	L
3	Oil Passage Plug (M6)	3.5	0.36	31 in·lb	
4	Oil Passage Plug	20	2.0	15	L
5	Oil Pressure Switch	15	1.5	11	LG
6	Oil Plate Bolts	9.8	1.0	87 in·lb	L
7	Oil Pressure Relief Valve	15	1.5	11	L
8	Oil Pipe Plate Bolt	9.8	1.0	87 in·lb	L
9	Filter Plate Bolts	9.8	1.0	87 in·lb	L
10	Oil Pan Bolts	12	1.2	106 in·lb	S
11	Engine Oil Drain Plug	30	3.1	22	
12	Lower Fairing Bracket Bolts	12	1.2	106 in·lb	L
13	Oil Pump Chain Guide Bolts	12	1.2	106 in·lb	L
14	Oil Pump Cover Bolts	9.8	1.0	87 in·lb	L
15	Oil Pump Sprocket Bolt	12	1.2	106 in·lb	L, Lh

EO: Apply engine oil.
G: Apply grease.
L: Apply a non-permanent locking agent.
LG: Apply liquid gasket.
Lh: Left-hand Threads
MO: Apply molybdenum disulfide oil solution.
(mixture of the engine oil and molybdenum disulfide grease in a weight ratio 10 : 1)
R: Replacement Parts
S: Follow the specified tightening sequence.

Engine Oil Flow Chart

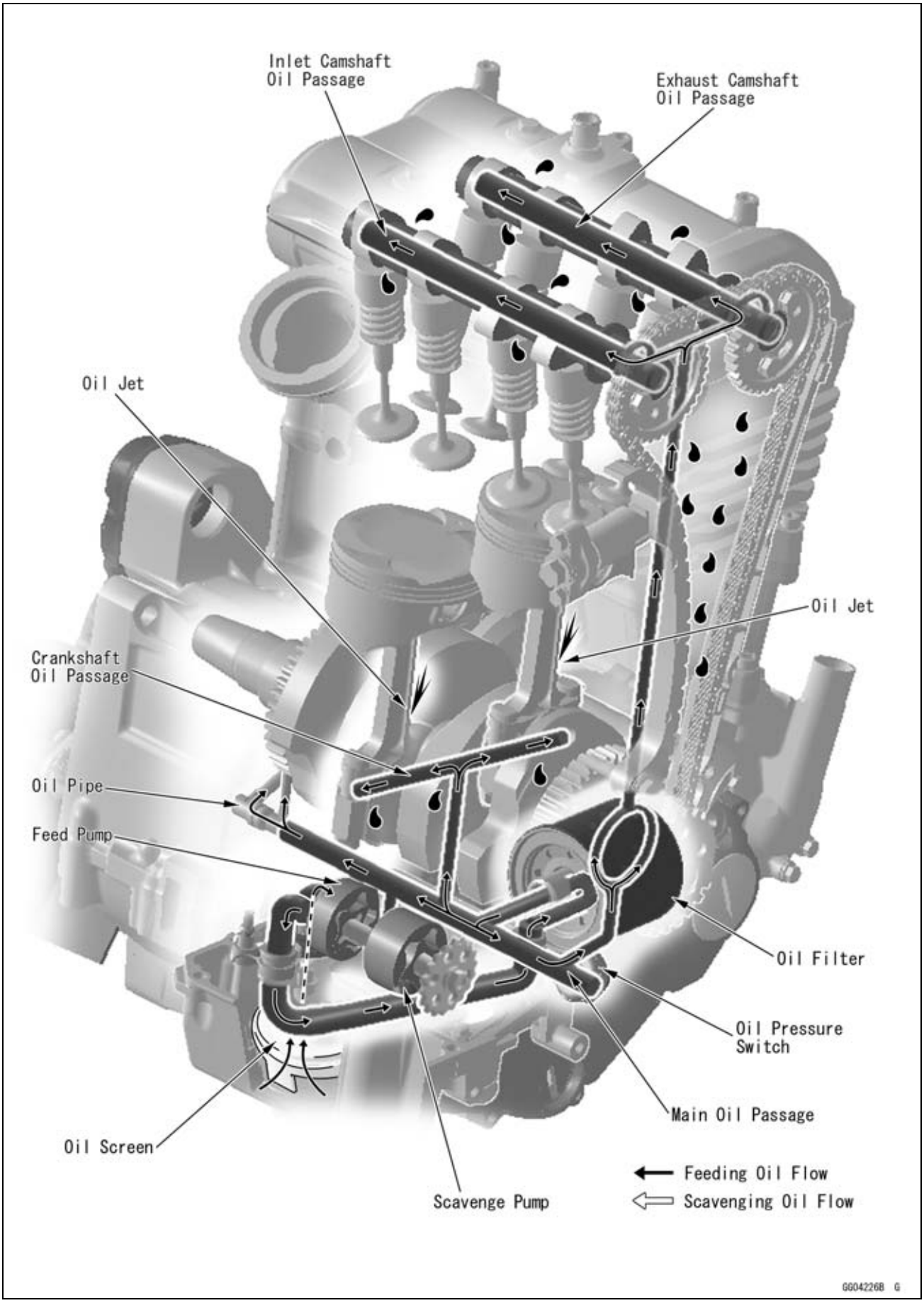

Engine Oil Flow Chart

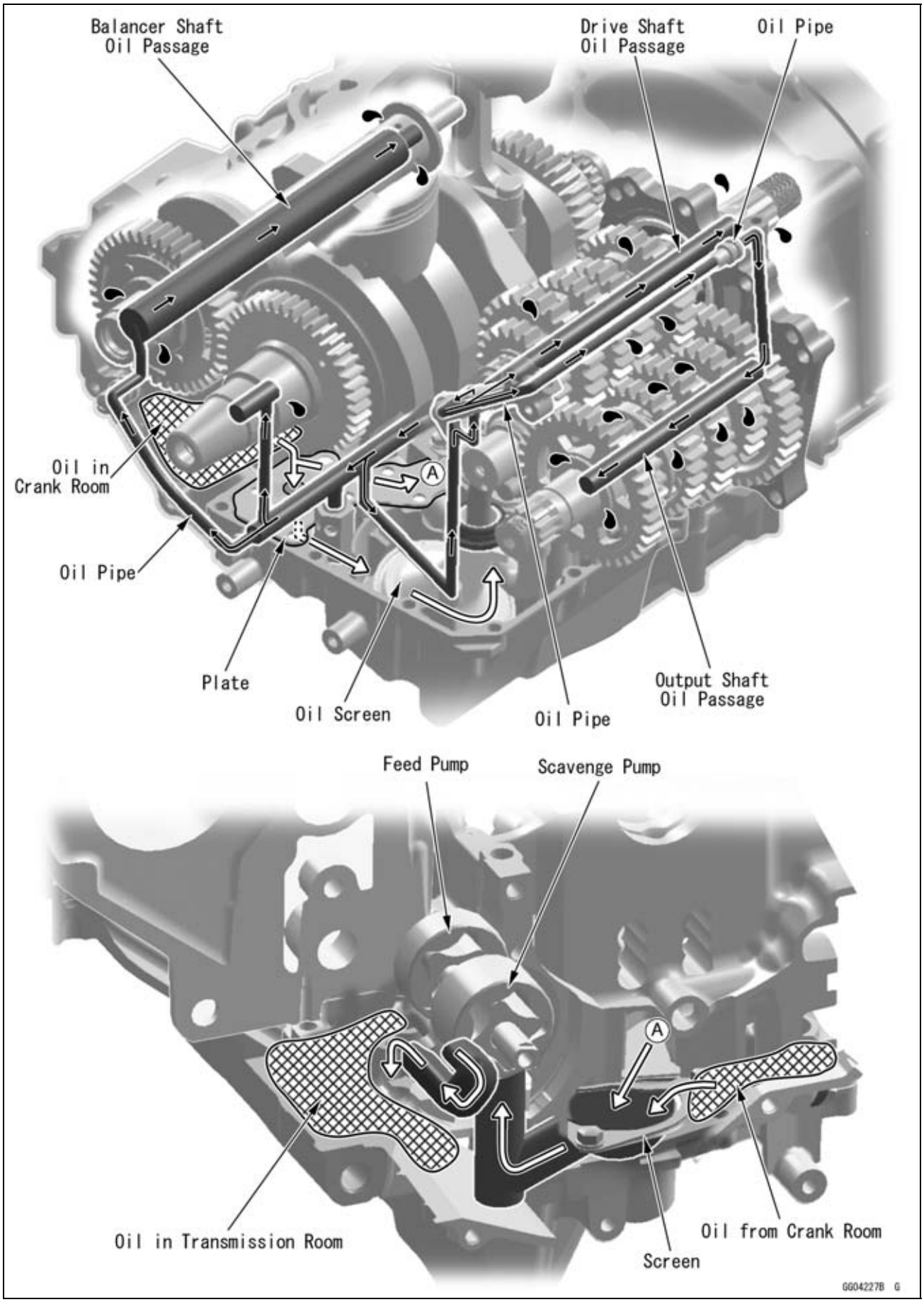

Specifications

Item	Standard
Engine Oil	
Type	API SG, SH, SJ, SL or SM with JASO MA, MA1 or MA2
Viscosity	SAE 10W-40
Capacity:	1.6 L (1.7 US gt) (when filter is not removed)
	1.8 L (1.9 US gt) (when filter is removed)
	2.3 L (2.4 US gt) (when engine is completely dry)
Level	Between upper and lower level lines
Oil Pressure Measurement	
Oil Pressure	216 ~ 294 kPa (2.2 ~ 3.0 kgf/cm², 31 ~ 43 psi) at 4 000 r/min (rpm), Oil Temperature 90°C (194°F)

Special Tools and Sealant

Oil Pressure Gauge, 10 kgf/cm²:
57001-164

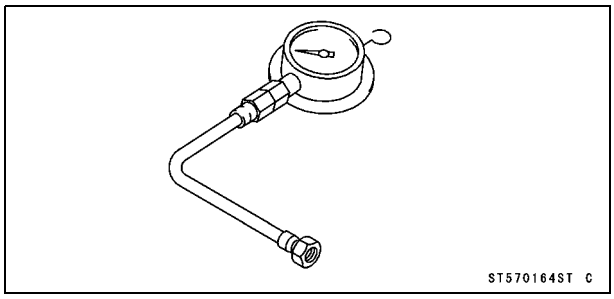

Oil Pressure Gauge Adapter, PT3/8:
57001-1233

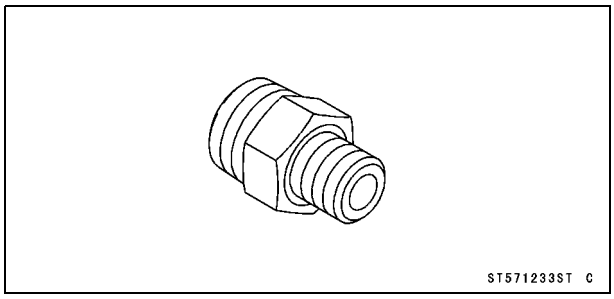

Liquid Gasket, TB1211:
56019-120

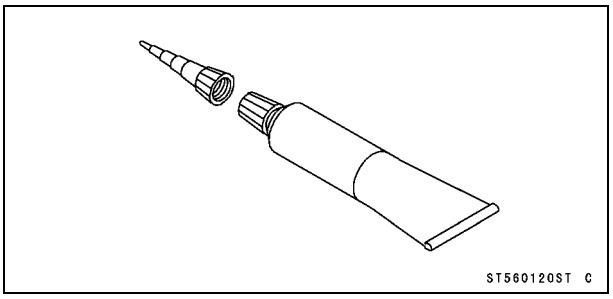

Engine Oil and Oil Filter

⚠ WARNING

Vehicle operation with insufficient, deteriorated, or contaminated engine oil will cause accelerated wear and may result in engine seizure, accident, and injury. Check the oil level before each use and change the oil and filter according to the periodic maintenance chart.

Oil Level Inspection

- Check that the engine oil level is between the upper [A] and lower [B] levels in the gauge.

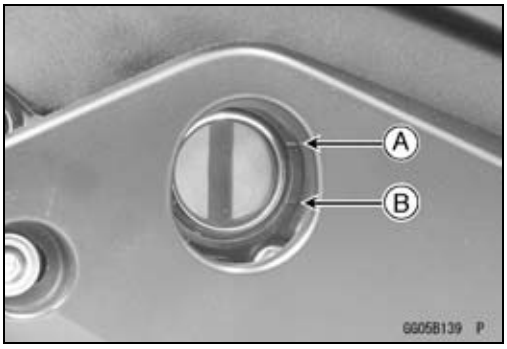

NOTE

○*Situate the motorcycle so that it is perpendicular to the ground.*

○*If the motorcycle has just been used, wait several minutes for all the oil to drain down.*

○*If the oil has just been changed, start the engine and run it for several minutes at idle speed. This fills the oil filter with oil. Stop the engine, then wait several minutes until the oil settles.*

NOTICE

Racing the engine before the oil reaches every part can cause engine seizure.
If the engine oil gets extremely low or if the oil pump or oil passages clog up or otherwise do not function properly, the red oil pressure warning indicator light (LED) will light. If this light stays on when the engine is running above idle speed, stop the engine immediately and find the cause.

★If the oil level is too high, remove the excess oil, using a syringe or some other suitable device.

★If the oil level is too low, add the correct amount of oil through the oil filter opening. Use the same type and make of oil that is already in the engine.

NOTE

○*If the engine oil type and make are unknown, use any brand of the specified oil to top off the level in preference to running the engine with the oil level low. Then at your earliest convenience, change the oil completely.*

Engine Oil Change

- Refer to the Engine Oil Change in the Periodic Maintenance chapter.

Oil Filter Replacement

- Refer to the Oil Filter Replacement in the Periodic Maintenance chapter.

Oil Pan

Oil Pan Removal

- Drain the engine oil (see Engine Oil Change in the Periodic Maintenance chapter).
- Remove:
  Middle Fairings (see Middle Fairing Removal in the Frame chapter)
  Lower Fairing Brackets (see Lower Fairing Bracket Removal in the Frame chapter)
  Muffler (see Muffler Removal in the Engine Top End chapter)

- Remove:
  Oil Pan Bolts [A]
  Oil Pan

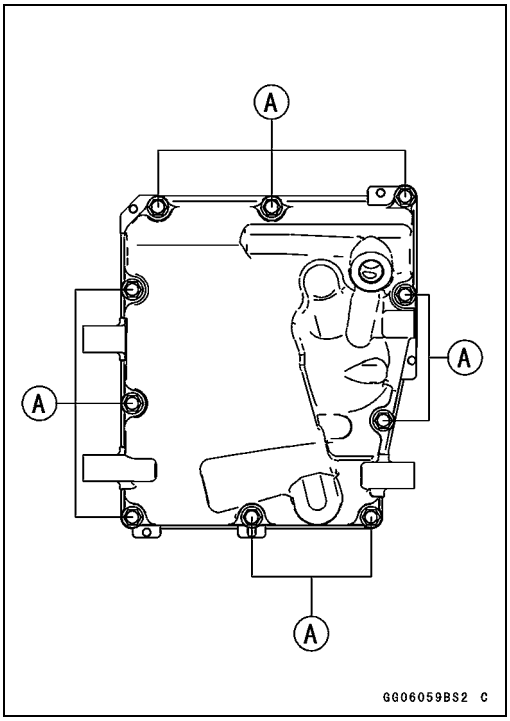

- Remove the following from the oil pan as necessary.
  Filter Plate Bolts [A]
  Filter Plate [B]
  Filter [C]

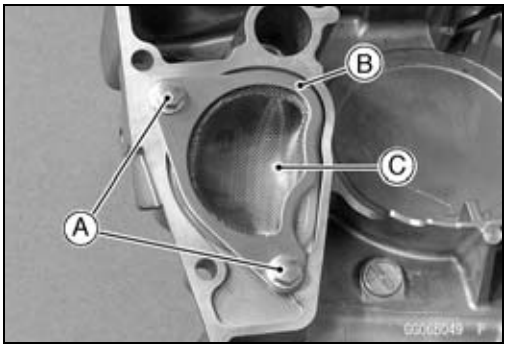

- Remove the following from the lower crankcase half as necessary.
  Oil Screen [A]
  Oil Pipe Plate Bolt [B]
  Oil Pipe Plate [C]
  Oil Pipes [D]
  Dampers [E]

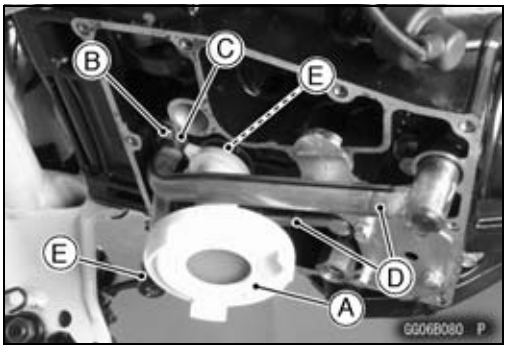

Oil Pan

Oil Pan Installation

★If the following parts were removed, install them in the following procedure.
Oil Pipes
Oil Pipe Plate
Dampers
Oil Screen
Filter
Filter Plate

○Replace the O-rings with new ones.
○Apply grease to the O-rings on the oil pipes [A].
○Install the oil pipe plate [B] so that its guide portion fits the oil pipe as shown in the figure.
○Apply a non-permanent locking agent to the oil pipe plate bolt [C].
○Tighten:

Torque - Oil Pipe Plate Bolt: 9.8 N·m (1.0 kgf·m, 87 in·lb)

○Install the damper [D] to the end of the breather pipe.
○Apply grease to the damper.

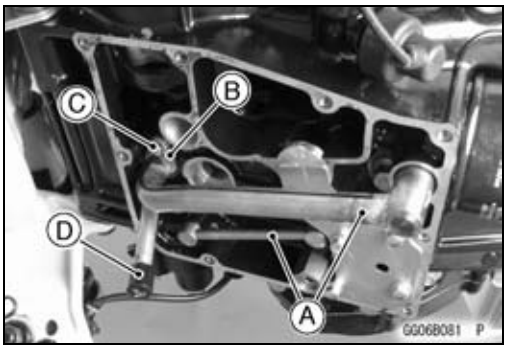

○Apply grease to the damper [A] on the oil screen [B], and install it on the lower crankcase half as shown in the figure.
○Install the oil screen so that its guide portion [C] fits the crankcase rib [D].

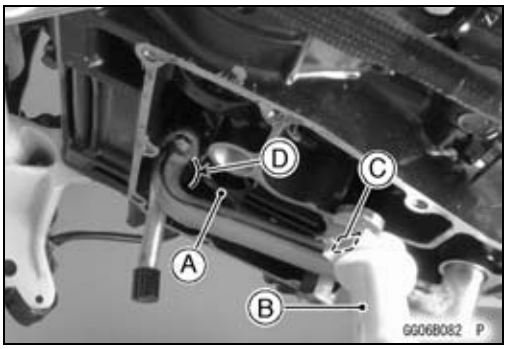

○Install:
Filter [A]
Filter Plate [B]
○Apply non-permanent locking agent to the filter plate bolts [C] and tighten them.

Torque - Filter Plate Bolts: 9.8 N·m (1.0 kgf·m, 87 in·lb)

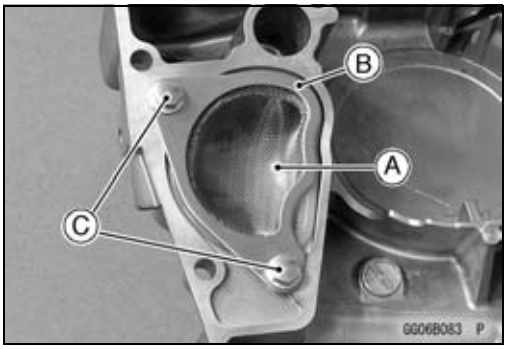

● Replace the oil pan gasket with a new one.
● When installing the oil pan, fit the damper [A] on the breather pipe into the hollow [B] of the oil pan.

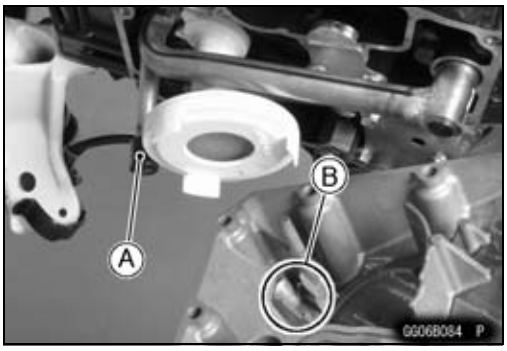

Oil Pan

- Tighten the oil pan bolts following the specified tightening sequence.

  Torque - Oil Pan Bolts: 12 N·m (1.2 kgf·m, 106 in·lb)

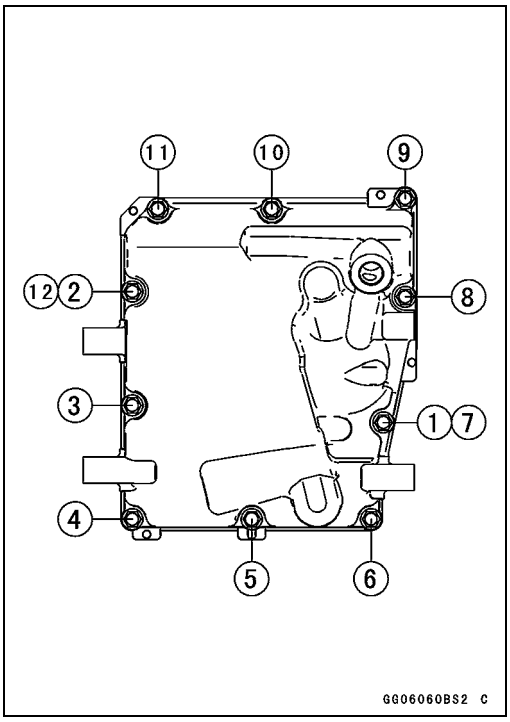

Oil Pressure Relief Valve

Oil Pressure Relief Valve Removal

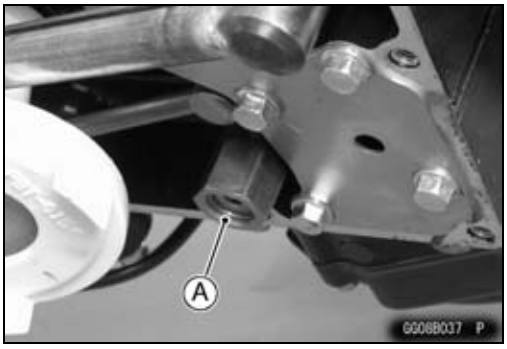

- Remove:
  Oil Pan (see Oil Pan Removal)
  Oil Pressure Relief Valve [A]

Oil Pressure Relief Valve Installation

- Apply a non-permanent locking agent to the threads of the oil pressure relief valve, and tighten it.

NOTICE

Do not apply too much non-permanent locking agent to the threads. This may block the oil passage.

Torque - Oil Pressure Relief Valve: 15 N·m (1.5 kgf·m, 11 ft·lb)

- Install the oil pan (see Oil Pan Installation).

Oil Pressure Relief Valve Inspection

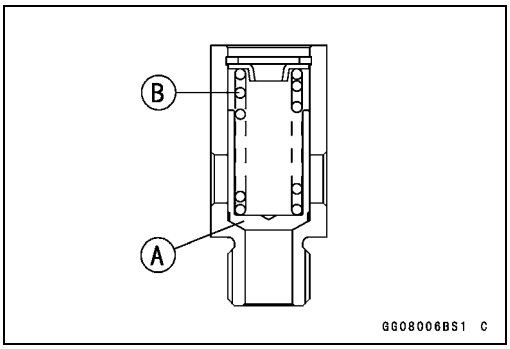

- Remove the oil pressure relief valve (see Oil Pressure Relief Valve Removal).
- Check to see if the valve [A] slides smoothly when pushing it in with a wooden or other soft rod, and see if it comes back to its seat by spring [B] pressure.

NOTE

○*Inspect the valve in its assembled state. Disassembly and assembly may change the valve performance.*

★If any rough spots are found during above inspection, wash the valve clean with a high flash-point solvent and blow out any foreign particles that may be in the valve with compressed air.

⚠ WARNING

Gasoline and low flash-point solvents can be flammable and/or explosive and cause severe burns. Clean the oil pressure relief valve in a well-ventilated area, and take care that there are no sparks or flame anywhere near the working area; this includes any appliance with a pilot light. Do not use gasoline or a low flash-point solvent to clean the oil pressure relief valve.

★If cleaning does not solve the problem, replace the oil pressure relief valve as an assembly. The oil pressure relief valve is precision made with no allowance for replacement of individual parts.

Oil Pump

Oil Pump Removal

- Remove:
  Clutch (see Clutch Removal in the Clutch chapter)
  Oil Pump Cover Bolts [A]

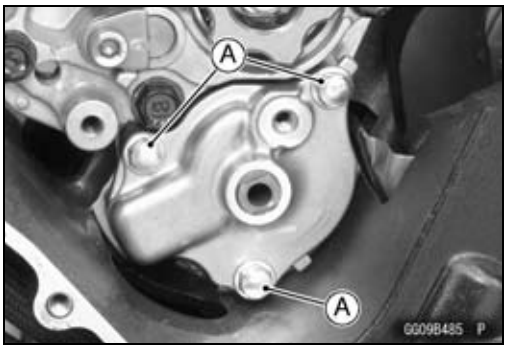

- Temporarily install the oil pump sprocket bolt [A].

NOTE

○*The oil pump sprocket bolt has a left-hand threads.*

- Using the oil pump sprocket bolt, pull out the oil pump [B] as an assembly.
- Remove the oil pump sprocket bolt.

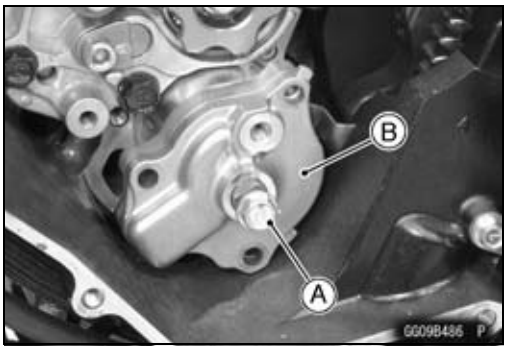

- Remove the outer rotor [A] for feed pump.

- Remove the oil pump cover [A].

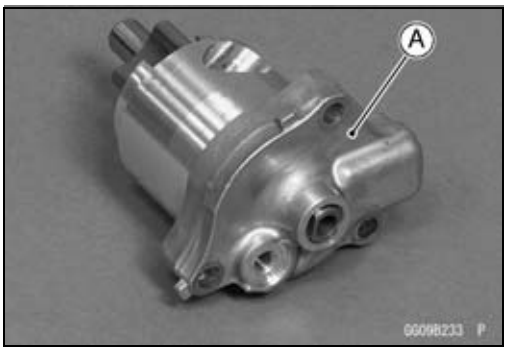

- Remove:
  Inner Rotor [A] for Scavenge Pump
  Outer Rotor [B] for Scavenge Pump

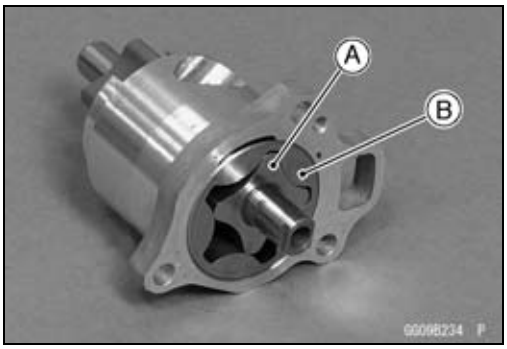

Oil Pump

● Remove the pin [A].

● Remove:
Pin [A]
Inner Rotor for Feed Pump [B]
Oil Pump Shaft [C]

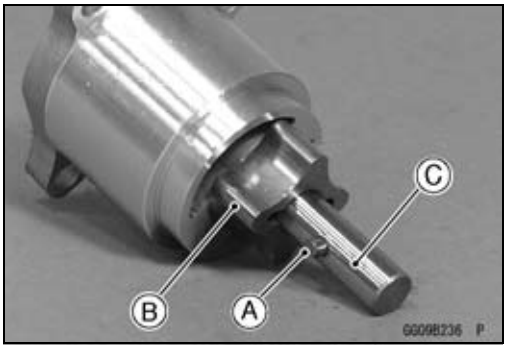

Oil Pump Installation

● Apply molybdenum disulfide oil solution to the portion [A] of the oil pump shaft as shown in the figure.
● Assemble the following parts.
Oil Pump Shaft [B]
Pin [C]
Inner Rotor for Feed Pump [D]
Oil Pump Body [E]
Pin [F]
Inner Rotor [G] for Scavenge Pump
Outer Rotor [H] for Scavenge Pump

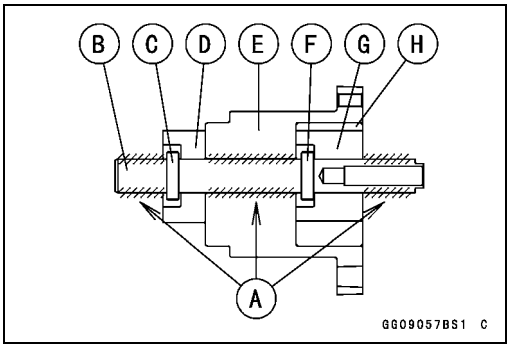

NOTE

○*The scavenge pump rotors are wider than the feed pump rotors.*

● Be sure that the dowel pin [A] is in position.
● Install the outer rotor [B] for feed pump.
● Fit the dowel pin into the hole [C] on the oil pump body.
○Turn the oil pump shaft so that the inner rotor [D] fits into the outer rotor for feed pump.

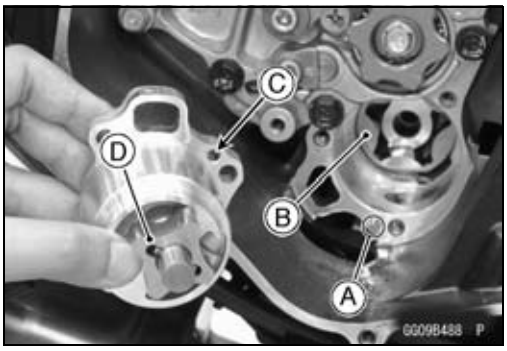

Oil Pump

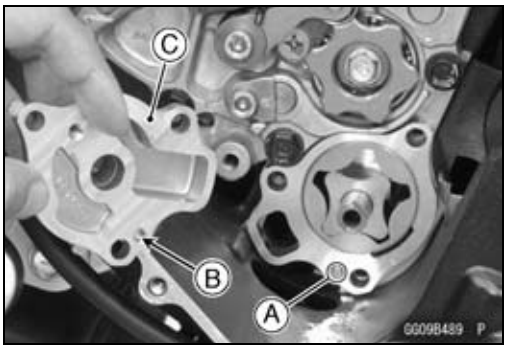

- Be sure that the dowel pin [A] is in position.
- Fit the dowel pin into the hole [B] on the oil pump cover [C].
- Apply a non-permanent locking agent to the oil pump cover bolts and tighten them.

  Torque - Oil Pump Cover Bolts: 9.8 N·m (1.0 kgf·m, 87 in·lb)
- Check that the oil pump turns smoothly.
- Install the clutch (see Clutch Installation in the Clutch chapter).

Oil Pressure Measurement

Oil Pressure Measurement

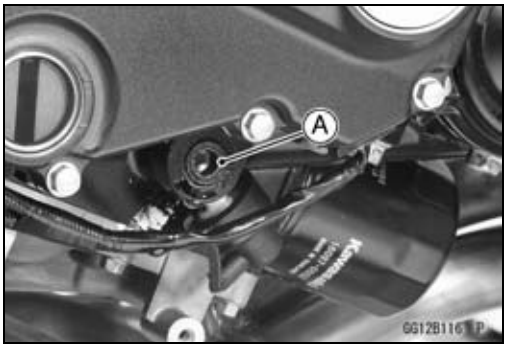

- Remove:
  Right Middle Fairing (see Middle Fairing Removal in the Frame chapter)
  Right Lower Fairing Bracket (see Lower Fairing Bracket Removal in the Frame chapter)
  Oil Passage Plug [A]

NOTE

○*Place a suitable container under the oil passage plug.*

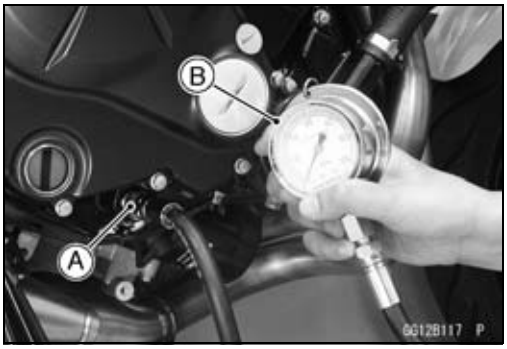

- Attach the adapter [A] and gauge [B] to the oil passage plug hole.

Special Tools - Oil Pressure Gauge, 10 kgf/cm²: 57001-164
Oil Pressure Gauge Adapter, PT3/8: 57001-1233

- Start the engine and warm up the engine.
- Run the engine at the specified speed, and read the oil pressure gauge.

★If the oil pressure is much lower than the standard, check the oil pump, relief valve, and/or crankshaft bearing insert wear immediately.

★If the reading is much higher than the standard, check the oil passages for clogging.

Oil Pressure
Standard: 216 ~ 294 kPa (2.2 ~ 3.0 kgf/cm², 31 ~ 43 psi) at 4 000 r/min (rpm), oil temperature 90°C (194°F)

- Stop the engine.
- Remove the oil pressure gauge and adapter.

⚠ WARNING

Hot oil can cause severe burns. Beware of hot engine oil that will drain through the oil passage when the gauge adapter is removed.

- Apply a non-permanent locking agent to the oil passage plug, and install it.
- Tighten:

Torque - Oil Passage Plug: 20 N·m (2.0 kgf·m, 15 ft·lb)

- Install:
  Right Lower Fairing Bracket (see Lower Fairing Bracket Installation in the Frame chapter)
  Right Middle Fairing (see Middle Fairing Installation in the Frame chapter)

Oil Pressure Switch

Oil Pressure Switch Removal

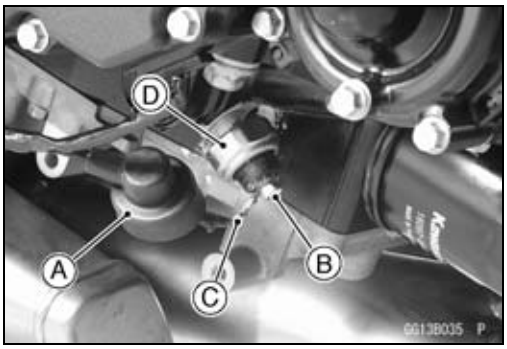

- Drain the engine oil (see Engine Oil Change in the Periodic Maintenance chapter).
- Remove:
  Right Middle Fairing (see Middle Fairing Removal in the Frame chapter)
  Right Lower Fairing Bracket (see Lower Fairing Bracket Removal in the Frame chapter)
  Switch Cover [A]
  Switch Terminal Bolt [B]
  Switch Lead [C]
  Oil Pressure Switch [D]

Oil Pressure Switch Installation

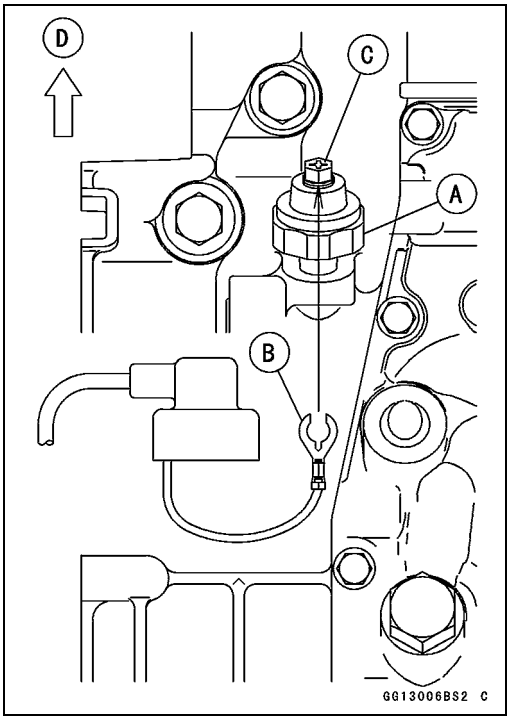

- Clean off any oil or dirt and apply liquid gasket to the threads of the oil pressure switch [A] and tighten it.

  Sealant - Liquid Gasket, TB1211: 56019-120

  Torque - Oil Pressure Switch: 15 N·m (1.5 kgf·m, 11 ft·lb)
- Install the switch lead [B] direction downward.
- Apply grease to the terminal [C], and tighten the terminal bolt securely.
  Front [D]

NOTE

○*Apply a small amount of grease to the terminal so that grease should not close two breather holes [A] for switch diaphragm.*

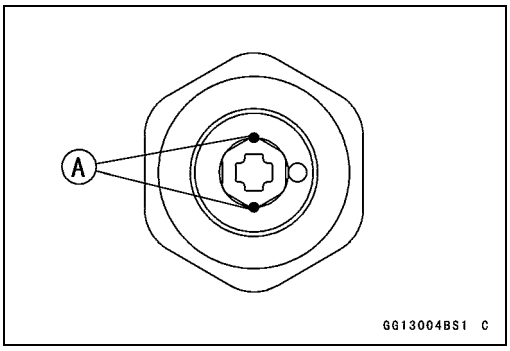

- Install:
  Switch Cover
  Right Lower Fairing Bracket (see Lower Fairing Bracket Installation in the Frame chapter)
  Right Middle Fairing (see Middle Fairing Installation in the Frame chapter)

Engine Removal/Installation

Table of Contents

Exploded View 8-2
Engine Removal/Installation 8-4
Engine Removal 8-4
Engine Installation 8-6

Exploded View

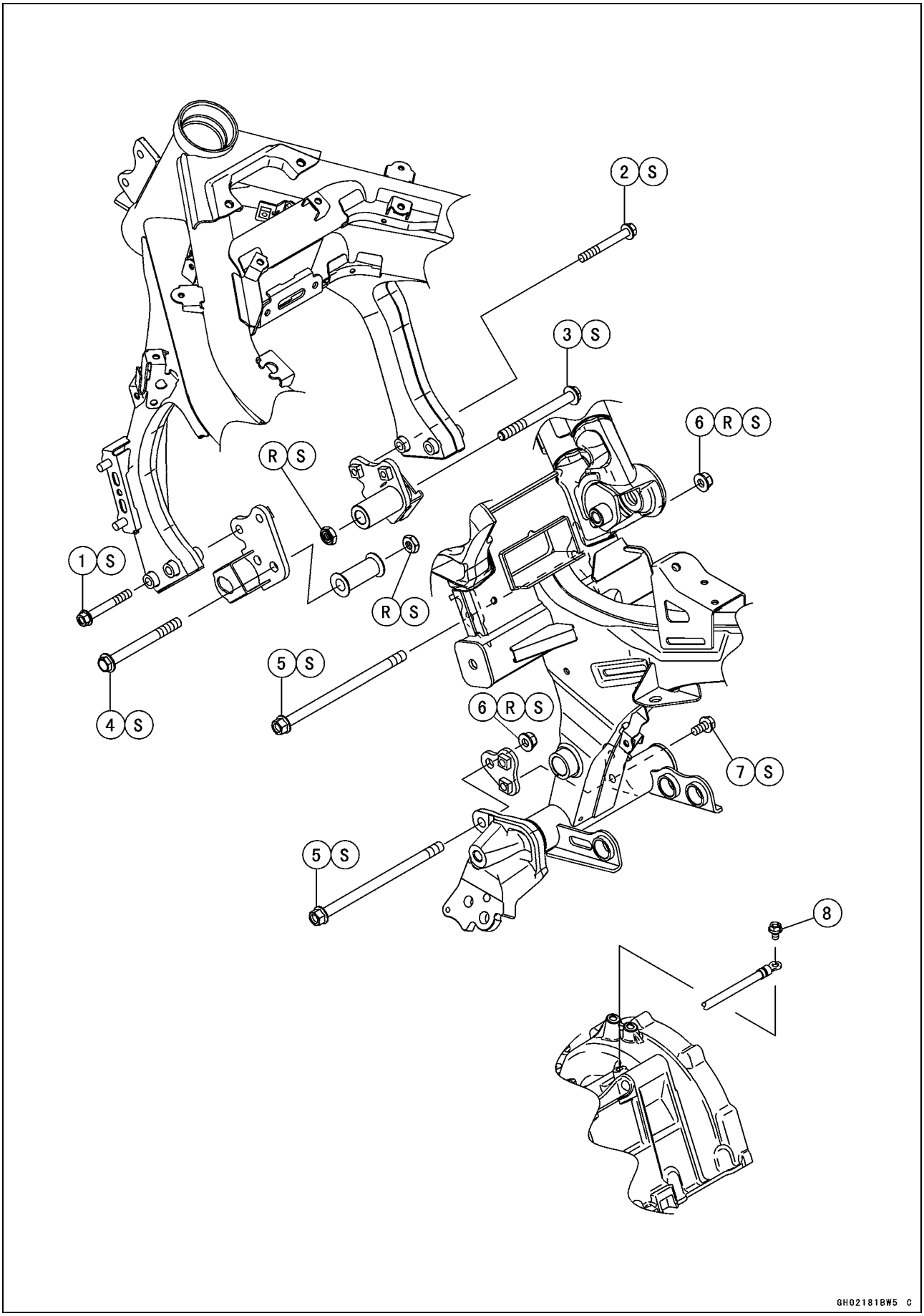

Exploded View

No.	Fastener	Torque			Remarks
		N·m	kgf·m	ft·lb	
1	Front Engine Bracket Bolts (Left)	25	2.5	18	S
2	Front Engine Bracket Bolts (Right)	30	3.1	22	S
3	Front Engine Mounting Bolt (Right)	49	5.0	36	S
4	Front Engine Mounting Bolt (Left)	44	4.5	32	S
5	Rear Engine Mounting Bolts	44	4.5	32	S
6	Rear Engine Mounting Nuts	44	4.5	32	R, S
7	Rear Engine Bracket Bolts	25	2.5	18	S
8	Engine Ground Lead Terminal Bolt	9.8	1.0	87 in·lb	

R: Replacement Parts
S: Follow the specified tightening sequence.

Engine Removal/Installation

Engine Removal

- Support the rear part of the swingarm with a stand.
- Squeeze the brake lever slowly and hold it with a band [A].

⚠ WARNING

Motorcycle may fall over unexpectedly resulting in an accident or injury. Be sure to hold the front brake when removing the engine.

NOTICE

Be sure to hold the front brake when removing the engine, or the motorcycle may fall over. The engine or the motorcycle could be damaged.

- Drain:
  Engine Oil (see Engine Oil Change in the Periodic Maintenance chapter)
  Coolant (see Coolant Change in the Periodic Maintenance chapter)

- Remove:
  Fuel Tank (see Fuel Tank Removal in the Fuel System (DFI) chapter)
  Air Cleaner Housing (see Air Cleaner Housing Removal in the Fuel System (DFI) chapter)
  Throttle Body Assy (see Throttle Body Assy Removal in the Fuel System (DFI) chapter)
  Radiator and Water Hoses (see Radiator and Radiator Fan Removal in the Cooling System chapter)
  Baffle Plate (see Cylinder Head Cover Removal in the Engine Top End chapter)
  Frame Covers (see Frame Cover Removal in the Frame chapter)
  Lower Fairing Brackets (see Lower Fairing Bracket Removal in the Frame chapter)
  Muffler (see Muffler Removal in the Engine Top End chapter)
  Clutch Cable Lower End (see Clutch Cover Removal in the Clutch chapter)
  Stick Coils (see Stick Coil Removal in the Electrical System chapter)
  Shift Pedal (see Shift Pedal Removal in the Crankshaft/Transmission chapter)
  Engine Sprocket (see Engine Sprocket Removal in the Final Drive chapter)

- Disconnect the oil pressure switch lead terminal (see Oil Pressure Switch Removal in the Engine Lubrication System).

Engine Removal/Installation

● Disconnect:
Crankshaft Sensor Lead Connector [A]
Starter Motor Cable Terminal [B]
Engine Ground Lead Terminal [C]
Water Temperature Sensor Lead Connector [D]

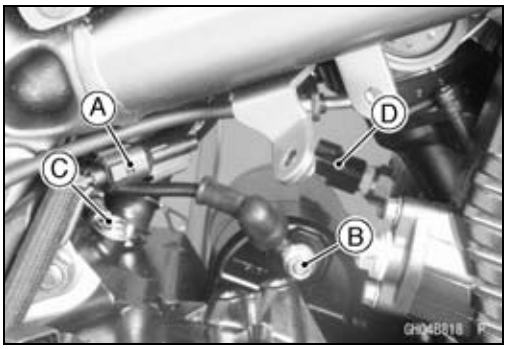

● Disconnect the alternator lead connector [A].

● Disconnect the neutral switch lead terminal [A].

● Support the engine using a suitable stand or jack [A].
○Put planks [B] to balance the engine.

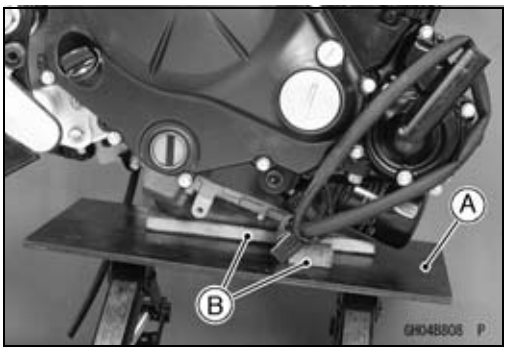

● Remove:
Front Engine Mounting Bolt [A] and Nut (Left)
Collar [B]
Front Engine Bracket Bolts (Left) [C]
● Remove the front engine bracket (left) [D].

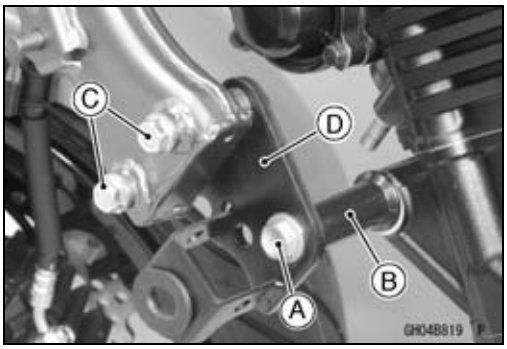

Engine Removal/Installation

- Remove:
  Front Engine Mounting Bolt [A] and Nut (Right)
  Front Engine Bracket Bolts (Right) [B]
  Front Engine Bracket (Right) [C]

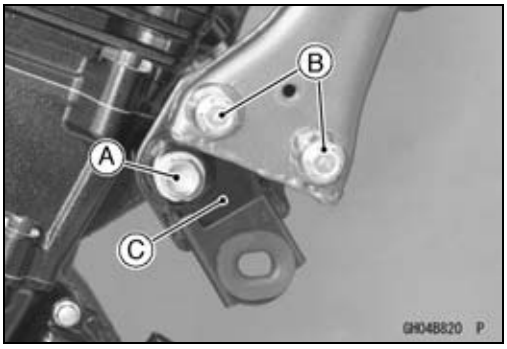

- Remove the rear engine mounting bolt and nut (upper) [A].

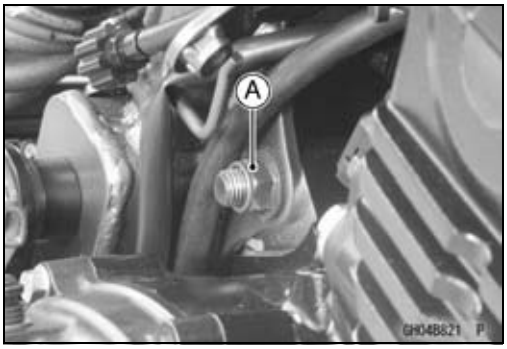

- Remove:
  Rear Engine Mounting Bolt and Nut (Lower) [A]
  Rear Engine Bracket Bolts [B]
  Rear Engine Bracket [C]
- Take off the engine.

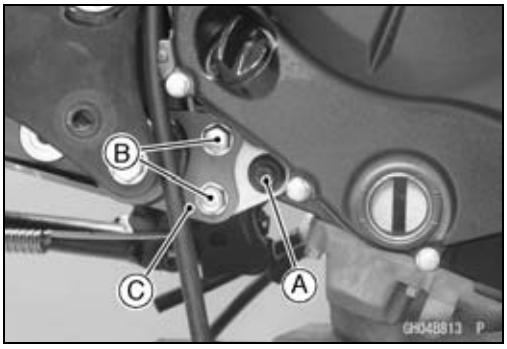

Engine Installation

- Install the following temporarily:
  Rear Engine Bracket [A]
  Rear Engine Bracket Bolts [B]
- Support the engine using a suitable stand or jack.

○Put planks to balance the engine.

- Install the engine to the frame.
- Insert the rear engine mounting bolts [C].
- Replace the rear engine mounting nuts with new ones.
- First tighten the engine mounting nut (lower) [D] temporarily.
- Then tighten the engine mounting nut (upper) [E] temporarily.

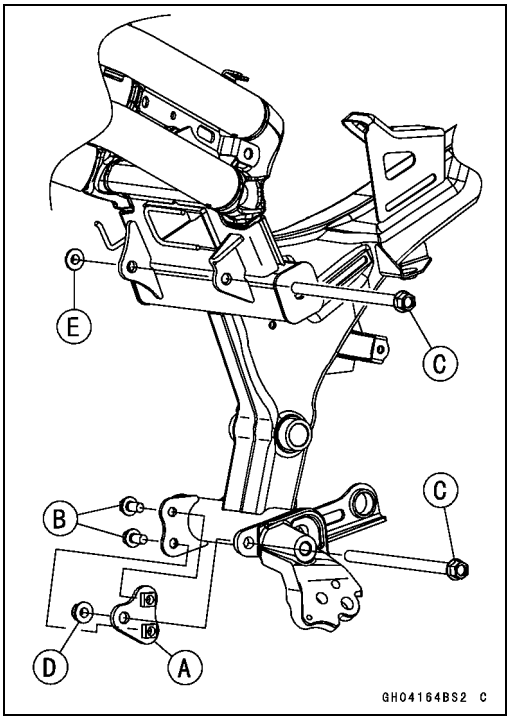

Engine Removal/Installation

- Install the following temporarily:
  Front Engine Bracket (Right) [A]
  Front Engine Bracket Bolts (Right) [B]
- Replace the front engine mounting nut (right) [C] with a new one.
- Install the following temporarily:
  Front Engine Mounting Bolt (Right) [D]
  Front Engine Mounting Nut (Right)
  Front Engine Bracket (Left) [E]
  Front Engine Bracket Bolts (Left) [F]
- Replace the front engine mounting nut (left) [G] with a new one.
- Install the following temporarily:
  Front Engine Mounting Bolt (Left) [H]
  Collar [I]
  Front Engine Mounting Nut (Left)

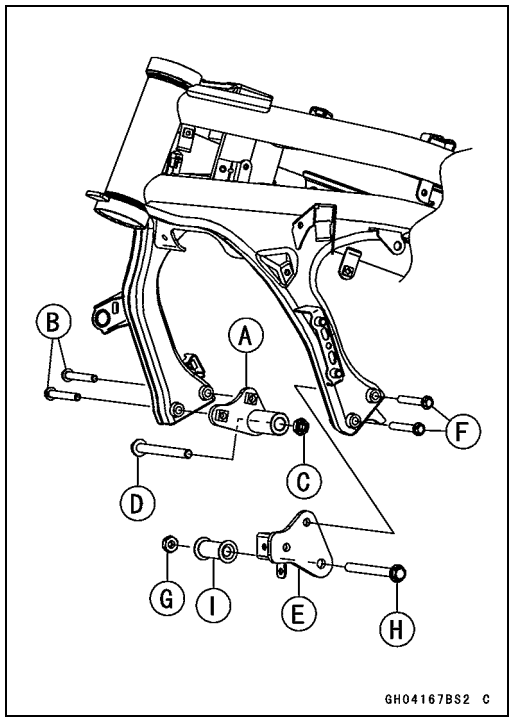

- By the following specified sequence, tighten the bolts.

○Tighten:

Torque - Rear Engine Bracket Bolt (Upper) [A]: 25 N·m (2.5 kgf·m, 18 ft·lb)
Rear Engine Bracket Bolt (Lower) [B]: 25 N·m (2.5 kgf·m, 18 ft·lb)
Rear Engine Mounting Bolt and Nut (Lower) [C]: 44 N·m (4.5 kgf·m, 32 ft·lb)

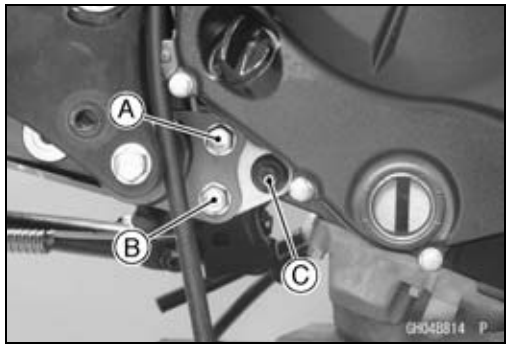

○Tighten:

Torque - Rear Engine Mounting Bolt and Nut (Upper) [D]: 44 N·m (4.5 kgf·m, 32 ft·lb)

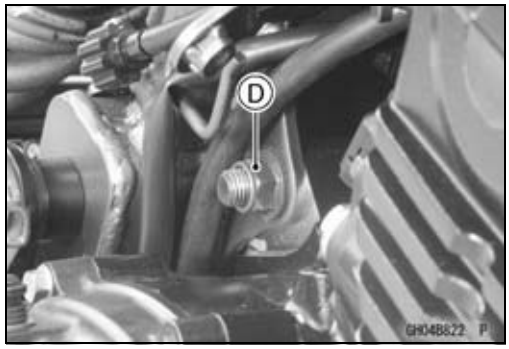

○Tighten:

Torque - Front Engine Bracket Bolts (Right) [E]: 30 N·m (3.1 kgf·m, 22 ft·lb)
Front Engine Mounting Bolt [F] (Right): 49 N·m (5.0 kgf·m, 36 ft·lb)

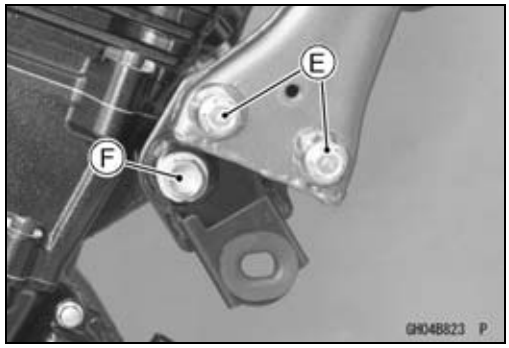

Engine Removal/Installation

○Tighten:

Torque - Front Engine Bracket Bolts (Left) [G]: 25 N·m (2.5 kgf·m, 18 ft·lb)
Front Engine Mounting Bolt [H] (Left): 44 N·m (4.5 kgf·m, 32 ft·lb)

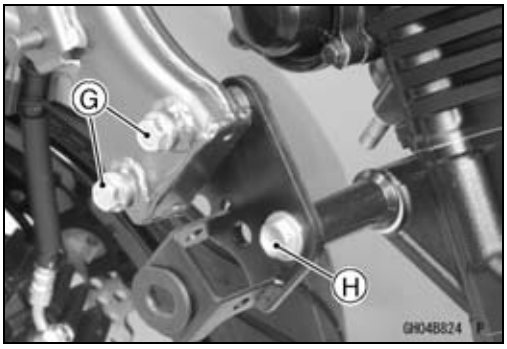

- Run the leads, cables, and hoses correctly (see Cable, Wire, and Hose Routing section in the Appendix chapter).
- Install the engine ground lead [A] as shown.
  45 ~ 55° [B]
  Front [C]

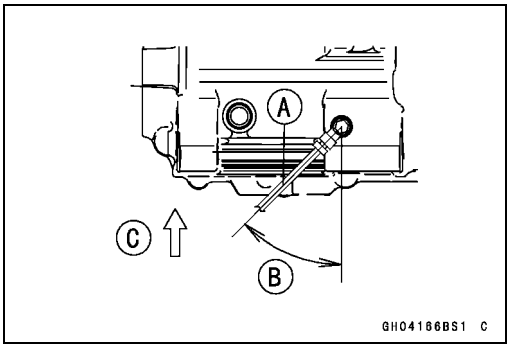

- Tighten:

Torque - Engine Ground Lead Terminal Bolt: 9.8 N·m (1.0 kgf·m, 87 in·lb)

- Install the removed parts (see appropriate chapters).
- Fill the engine with engine oil (see Engine Oil Change in the Periodic Maintenance chapter).
- Fill the engine with coolant and bleed the air from the cooling system (see Coolant Change in the Periodic Maintenance chapter).
- Adjust:
  Throttle Cables (see Throttle Control System Inspection in the Periodic Maintenance chapter)
  Clutch Cable (see Clutch Operation Inspection in the Periodic Maintenance chapter)
  Drive Chain (see Drive Chain Slack Adjustment in the Periodic Maintenance chapter)
  Idle Speed (see Idle Speed Adjustment in the Periodic Maintenance chapter)

Crankshaft/Transmission

Table of Contents

Exploded View 9-2
Specifications 9-6
Special Tools and Sealants 9-9
Crankcase Splitting 9-10
  Crankcase Splitting 9-10
  Crankcase Assembly 9-12
Crankshaft and Connecting Rods 9-19
  Crankshaft Removal 9-19
  Crankshaft Installation 9-19
  Connecting Rod Removal 9-19
  Connecting Rod Installation 9-20
  Crankshaft/Connecting Rod Cleaning 9-23
  Connecting Rod Bend Inspection 9-23
  Connecting Rod Twist Inspection 9-24
  Connecting Rod Big End Side Clearance Inspection 9-24
  Connecting Rod Big End Bearing Insert/Crankpin Wear Inspection 9-24
  Crankshaft Side Clearance Inspection 9-26
  Crankshaft Runout Inspection 9-26
  Crankshaft Main Bearing Insert/Journal Wear Inspection 9-27
Balancer 9-29
  Balancer Removal 9-29
  Balancer Installation 9-29
  Balancer Shaft Bearing Insert/Journal Clearance Inspection 9-29
External Shift Mechanism 9-32
  Shift Pedal Removal 9-32
  Shift Pedal Installation 9-32
  External Shift Mechanism Removal 9-32
  External Shift Mechanism Installation 9-33
  External Shift Mechanism Inspection 9-34
Transmission 9-35
  Transmission Assy Removal 9-35
  Transmission Assy Installation 9-35
  Transmission Assy Disassembly 9-36
  Transmission Assy Assembly 9-37
  Transmission Shaft Removal 9-39
  Transmission Shaft Installation 9-39
  Transmission Shaft Disassembly 9-40
  Transmission Shaft Assembly 9-40
  Shift Drum and Fork Removal 9-43
  Shift Drum and Fork Installation 9-43
  Shift Drum Disassembly 9-43
  Shift Drum Assembly 9-43
  Shift Fork Bending Inspection 9-43
  Shift Fork/Gear Groove Wear Inspection 9-43
  Shift Fork Guide Pin/Drum Groove Wear Inspection 9-43
  Gear Dog and Gear Dog Hole Damage Inspection 9-44
Ball Bearing, Needle Bearing, and Oil Seal 9-45
  Ball and Needle Bearing Replacement 9-45
  Ball and Needle Bearing Wear Inspection 9-45
  Oil Seal Inspection 9-45

Exploded View

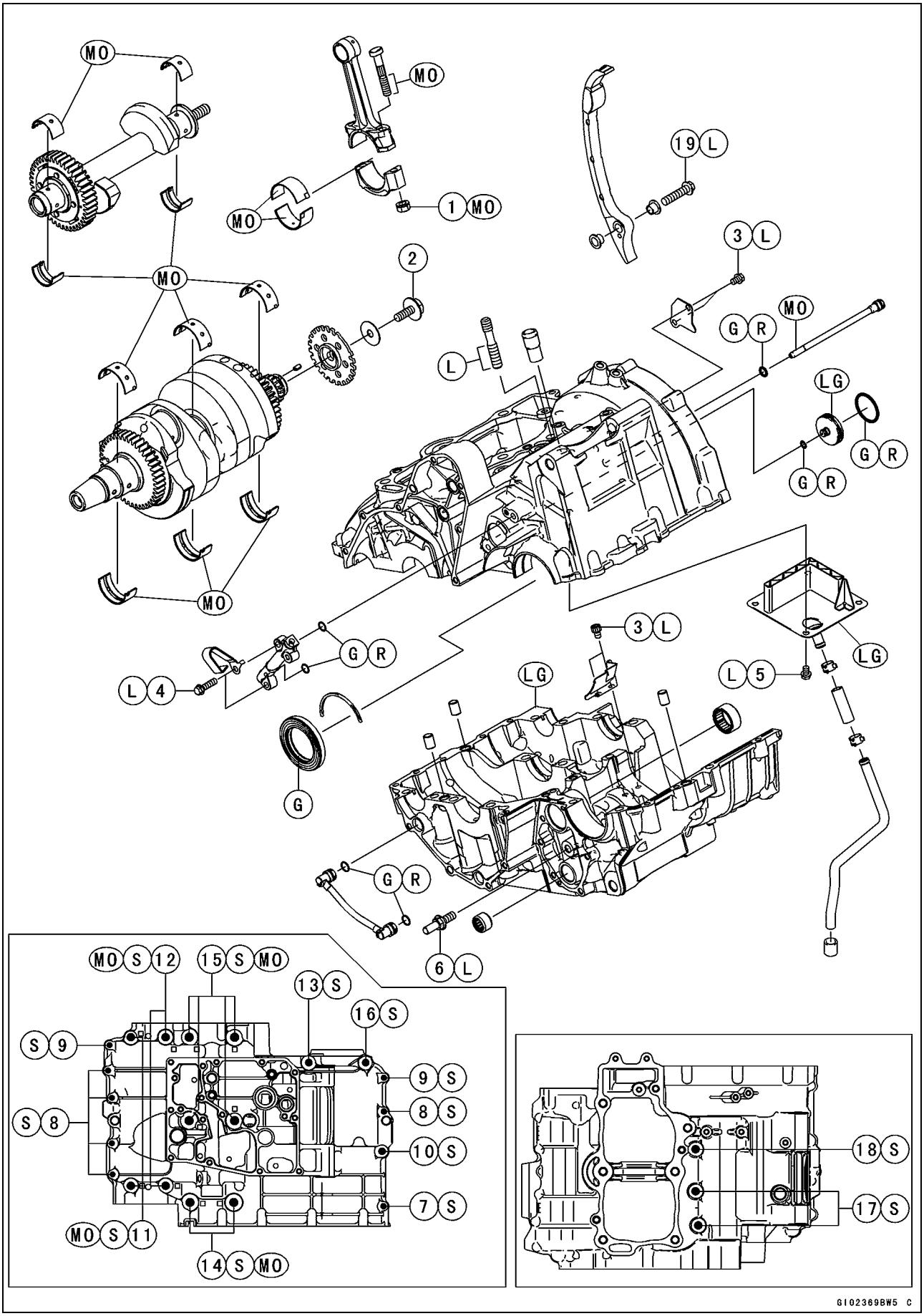

Exploded View

No.	Fastener	Torque			Remarks
		N·m	kgf·m	ft·lb	
1	Connecting Rod Big End Nuts	see Text	←	←	MO
2	Timing Rotor Bolt	40	4.1	30	
3	Oil Plate Bolts	9.8	1.0	87 in·lb	L
4	Oil Pipe Bolts	9.8	1.0	87 in·lb	L
5	Breather Plate Bolts	9.8	1.0	87 in·lb	L
6	Shift Shaft Return Spring Pin	29	3.0	21	L
7	Crankcase Bolt (M6, L = 32 mm)	19.6	2.0	14	S
8	Crankcase Bolts (M6, L = 38 mm)	19.6	2.0	14	S
9	Crankcase Bolts (M6, L = 45 mm)	19.6	2.0	14	S
10	Crankcase Bolt (M8, L = 50 mm)	27.5	2.8	20	S
11	Crankcase Bolts (M8, L = 60 mm)	25.5	2.6	19	MO, S
12	Crankcase Bolts (M8, L = 73 mm)	25.5	2.6	19	MO, S
13	Crankcase Bolt (M8, L = 110 mm)	27.5	2.8	20	S
14	Crankcase Bolts (M9, L = 83 mm)	44	4.5	32	MO, S
15	Crankcase Bolts (M9, L = 113 mm)	44	4.5	32	MO, S
16	Crankcase Bolt (M8, L = 60 mm)	27.5	2.8	20	S
17	Upper Crankcase Bolts (M8, L = 110 mm)	27.5	2.8	20	S
18	Upper Crankcase Bolt (M8, L = 120 mm)	27.5	2.8	20	S
19	Rear Camshaft Chain Guide Bolt	20	2.0	15	L

G: Apply grease.
L: Apply a non-permanent locking agent.
LG: Apply liquid gasket.
MO: Apply molybdenum disulfide oil solution.
(mixture of the engine oil and molybdenum disulfide grease in a weight ratio 10 : 1)
R: Replacement Parts
S: Follow the specified tightening sequence.

Exploded View

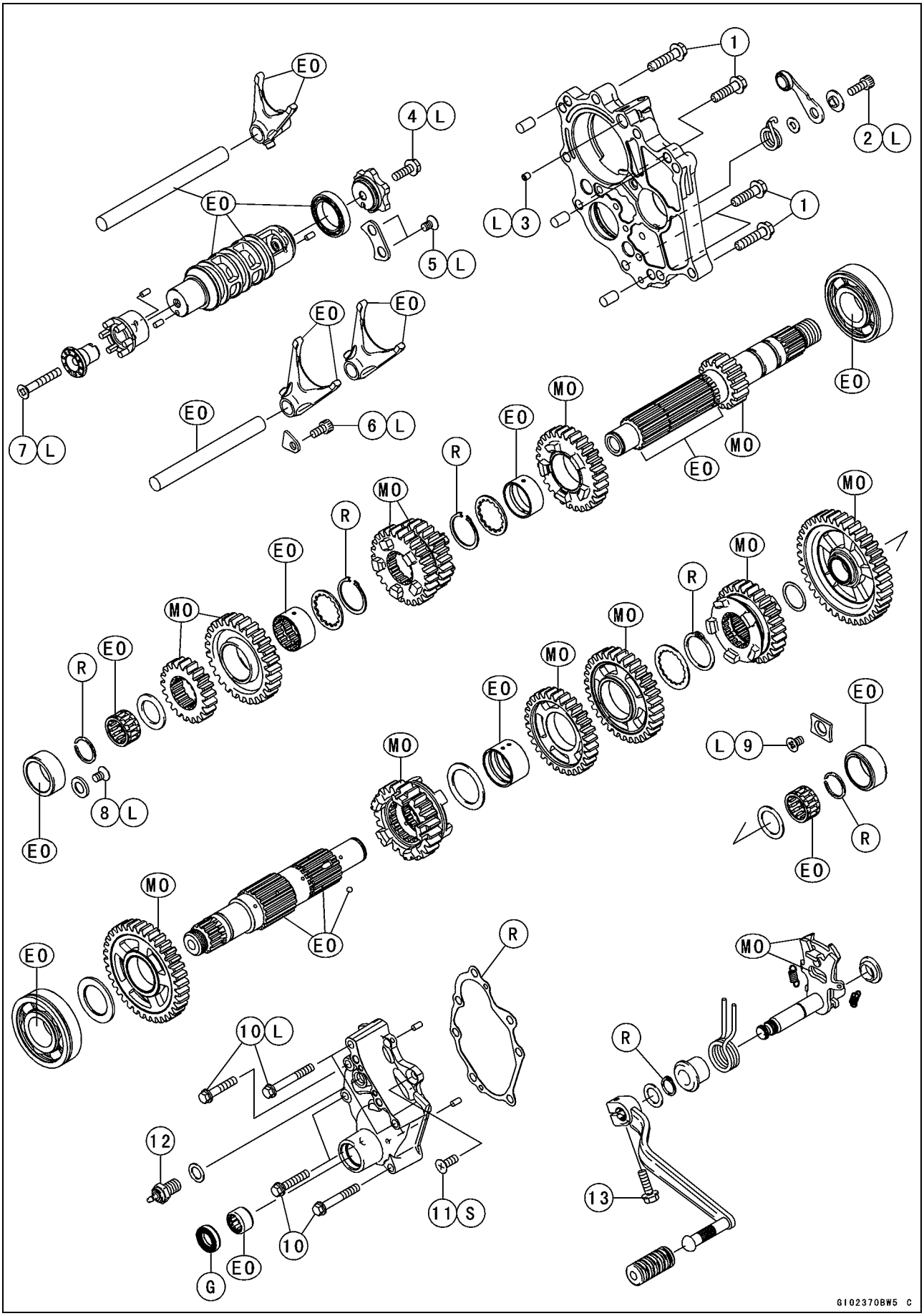

Exploded View

No.	Fastener	Torque			Remarks
		N·m	kgf·m	ft·lb	
1	Transmission Case Bolts	20	2.0	15	
2	Gear Positioning Lever Bolt	12	1.2	106 in·lb	L
3	Trasnmission Case Oil Nozzle	2.9	0.30	26 in·lb	L
4	Shift Drum Cam Bolt	12	1.2	106 in·lb	L
5	Shift Drum Bearing Holder Screws	4.9	0.50	43 in·lb	L
6	Shift Rod Plate Bolt	9.8	1.0	87 in·lb	L
7	Neutral Switch Holder Screw	4.9	0.50	43 in·lb	L
8	Race Holder Screw	4.9	0.50	43 in·lb	L
9	Drive Shaft Bearing Holder Screw	4.9	0.50	43 in·lb	L
10	Shift Shaft Cover Bolts	9.8	1.0	87 in·lb	L (3)
11	Shift Shaft Cover Screw	4.9	0.50	43 in·lb	L, S
12	Neutral Switch	15	1.5	11	
13	Shift Pedal Bolt	12	1.2	106 in·lb	

EO: Apply engine oil.
G: Apply grease.
L: Apply a non-permanent locking agent.
MO: Apply molybdenum disulfide oil solution.
(mixture of the engine oil and molybdenum disulfide grease in a weight ratio 10 : 1)
R: Replacement Parts
S: Follow the specified tightening sequence.

Specifications

Item	Standard	Service Limit
Crankshaft, Connecting Rods		
Connecting Rod Bend	– – –	TIR 0.2/100 mm (0.008/3.94 in.)
Connecting Rod Twist	– – –	TIR 0.2/100 mm (0.008/3.94 in.)
Connecting Rod Big End Side Clearance	0.13 ~ 0.38 mm (0.0051 ~ 0.0150 in.)	0.58 mm (0.023 in.)
Connecting Rod Big End Bearing Insert/Crankpin Clearance	0.017 ~ 0.041 mm (0.0007 ~ 0.0016 in.)	0.08 mm (0.003 in.)
Crankpin Diameter:	37.984 ~ 38.000 mm (1.4954 ~ 1.4961 in.)	37.97 mm (1.4949 in.)
Marking:		
None	37.984 ~ 37.992 mm (1.4954 ~ 1.4957 in.)	– – –
○	37.993 ~ 38.000 mm (1.4958 ~ 1.4961 in.)	– – –
Connecting Rod Big End Inside Diameter:	41.000 ~ 41.016 mm (1.6142 ~ 1.6148 in.)	– – –
Marking:		
None	41.000 ~ 41.008 mm (1.6142 ~ 1.6145 in.)	– – –
○	41.009 ~ 41.016 mm (1.6145 ~ 1.6148 in.)	– – –
Connecting Rod Big End Bearing Insert Thickness:		
Brown	1.475 ~ 1.480 mm (0.05807 ~ 0.05827 in.)	– – –
Black	1.480 ~ 1.485 mm (0.05827 ~ 0.05846 in.)	– – –
Blue	1.485 ~ 1.490 mm (0.05846 ~ 0.05866 in.)	– – –

Connecting Rod Big End Bearing Insert Selection:

Connecting Rod Big End Inside Diameter Marking	Crankpin Diameter Marking	Bearing Insert	
		Size Color	Part Number
None	○	Brown	92139-0116
None	None	Black	92139-0115
○	○		
○	None	Blue	92139-0114

Connecting Rod Bolt Stretch:	(Usable Range)	
New Connecting Rod	0.24 ~ 0.36 mm (0.0094 ~ 0.0142 in.)	– – –
Used Connecting Rod	0.20 ~ 0.32 mm (0.0079 ~ 0.0126 in.)	– – –
Crankshaft Side Clearance	0.05 ~ 0.20 mm (0.0020 ~ 0.0079 in.)	0.40 mm (0.016 in.)

Specifications

Item	Standard	Service Limit
Crankshaft Runout	TIR 0.02 mm (0.0008 in.) or less	TIR 0.05 mm (0.002 in.)
Crankshaft Main Bearing Insert/Journal Clearance	0.017 ~ 0.041 mm (0.0007 ~ 0.0016 in.)	0.07 mm (0.003 in.)
Crankshaft Main Journal Diameter:	37.984 ~ 38.000 mm (1.4954 ~ 1.4961 in.)	37.96 mm (1.4945 in.)
Marking:		
None	37.984 ~ 37.992 mm (1.4954 ~ 1.4957 in.)	– – –
1	37.993 ~ 38.000 mm (1.4958 ~ 1.4961 in.)	– – –
Crankcase Main Bearing Inside Diameter:	41.000 ~ 41.016 mm (1.6142 ~ 1.6148 in.)	– – –
Marking:		
○	41.000 ~ 41.008 mm (1.6142 ~ 1.6145 in.)	– – –
None	41.009 ~ 41.016 mm (1.6145 ~ 1.6148 in.)	– – –
Crankshaft Main Bearing Insert Thickness:		
Brown	1.490 ~ 1.494 mm (0.05866 ~ 0.05882 in.)	– – –
Black	1.494 ~ 1.498 mm (0.05882 ~ 0.05898 in.)	– – –
Blue	1.498 ~ 1.502 mm (0.05898 ~ 0.05913 in.)	– – –

Crankshaft Main Bearing Insert Selection:

Crankcase Main Bearing Inside Diameter Marking	Crankshaft Main Journal Diameter Marking	Bearing Insert*	
		Size Color	Part Number
○	1	Brown	92028-1905
None	1	Black	92028-1904
○	None		
None	None	Blue	92028-1903

*The bearing inserts for Nos. 1, 2 and 3 journals have oil grooves.

Balancer Shaft		
Balancer Shaft Bearing Insert/Journal Clearance	0.011 ~ 0.033 mm (0.0004 ~ 0.0013 in.)	0.06 mm (0.002 in.)
Balancer Shaft Journal Diameter:	27.987 ~ 28.000 mm (1.1019 ~ 1.1024 in.)	27.96 mm (1.1008 in.)
Marking:		
None	27.987 ~ 27.993 mm (1.1019 ~ 1.1021 in.)	– – –
○	27.994 ~ 28.000 mm (1.1021 ~ 1.1024 in.)	– – –

Specifications

Item	Standard	Service Limit
Crankcase Bearing Bore Diameter:	31.000 ~ 31.016 mm (1.2205 ~ 1.2211 in.)	– – –
Marking:		
○	31.000 ~ 31.008 mm (1.2205 ~ 1.2208 in.)	– – –
None	31.009 ~ 31.016 mm (1.2208 ~ 1.2211 in.)	– – –
Balancer Shaft Bearing Insert Thickness:		
Brown	1.490 ~ 1.494 mm (0.05866 ~ 0.05882 in.)	– – –
Black	1.494 ~ 1.498 mm (0.05882 ~ 0.05898 in.)	– – –
Blue	1.498 ~ 1.502 mm (0.05898 ~ 0.05913 in.)	– – –

Balancer Shaft Bearing Insert Selection:

Crankcase Bearing Inside Diameter Marking	Balancer Shaft Journal Diameter Marking	Bearing Insert*	
		Size Color	Part Number
○	○	Brown	92139-0119
○	None	Black	92139-0118
None	○		
None	None	Blue	92139-0117

*The bearing inserts for Nos. 1 and 2 journals have oil grooves.

Transmission		
Shift Fork Ear Thickness	5.9 ~ 6.0 mm (0.232 ~ 0.236 in.)	5.8 mm (0.23 in.)
Gear Groove Width	6.05 ~ 6.16 mm (0.238 ~ 0.243 in.)	6.3 mm (0.25 in.)
Shift Fork Guide Pin Diameter	6.9 ~ 7.0 mm (0.272 ~ 0.276 in.)	6.8 mm (0.27 in.)
Shift Drum Groove Width	7.05 ~ 7.20 mm (0.278 ~ 0.283 in.)	7.3 mm (0.29 in.)

Special Tools and Sealants

Outside Circlip Pliers:
57001-144

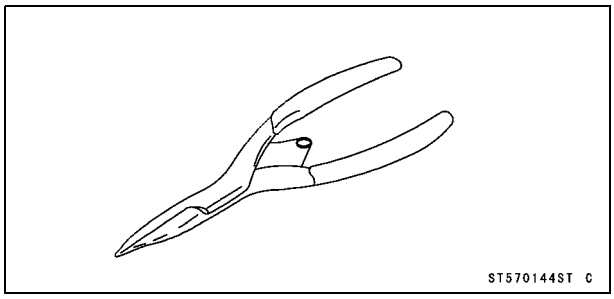

Bearing Driver Set:
57001-1129

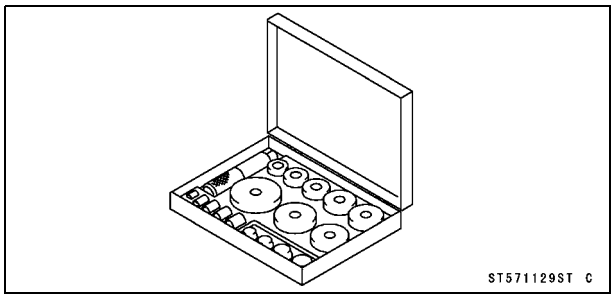

Liquid Gasket, TB1211F:
92104-0004

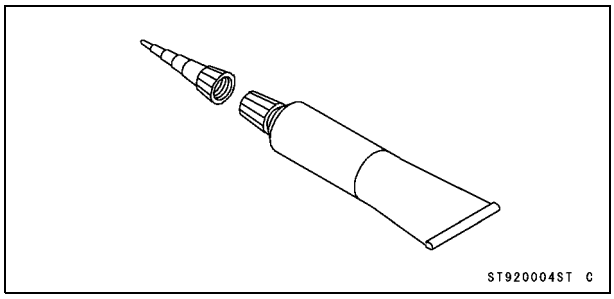

Liquid Gasket, TB1216B:
92104-1064

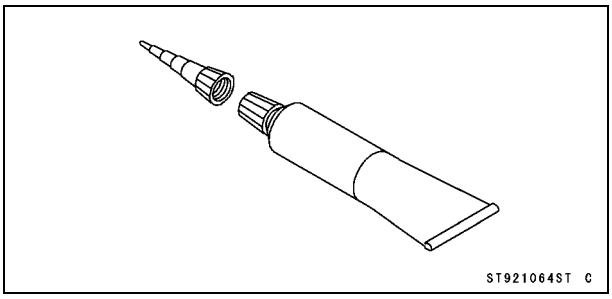

Liquid Gasket, TB1207B:
92104-2068

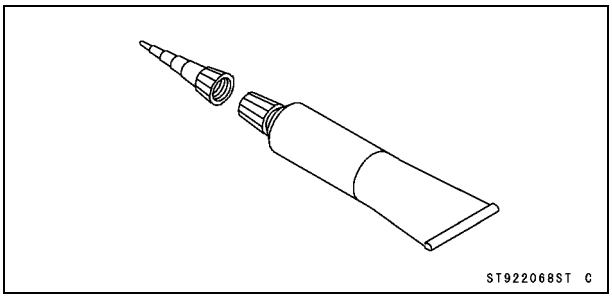

Crankcase Splitting

Crankcase Splitting

- Remove the engine (see Engine Removal in the Engine Removal/Installation chapter)
- Set the engine on a clean surface and hold the engine steady while parts are being removed.
- Remove:
  Cylinder Head Cover (see Cylinder Head Cover Removal in the Engine Top End chapter)
  Cylinder Head (see Cylinder Head Removal in the Engine Top End chapter)
  Cylinder (see Cylinder Removal in the Engine Top End chapter)
  Pistons (see Piston Removal in the Engine Top End chapter)
  Alternator Rotor (see Alternator Rotor Removal in the Electrical System chapter)
  Starter Motor (see Starter Motor Removal in the Electrical System chapter)
  Crankshaft Sensor (see Crankshaft Sensor Removal in the Electrical System chapter)
  Timing Rotor (see Timing Rotor Removal in the Electrical System chapter)
  Clutch (see Clutch Removal in the Clutch chapter)
  Oil Pump (see Oil Pump Removal in the Engine Lubrication System chapter)
  Water Pump (see Water Pump Removal in the Cooling System chapter)
  Transmission Assy (see Transmission Assy Removal)
  Oil Filter (see Oil Filter Replacement in the Periodic Maintenance chapter)

- Remove:
  Rear Camshaft Chain Guide Bolt [A]
  Rear Camshaft Chain Guide [B]

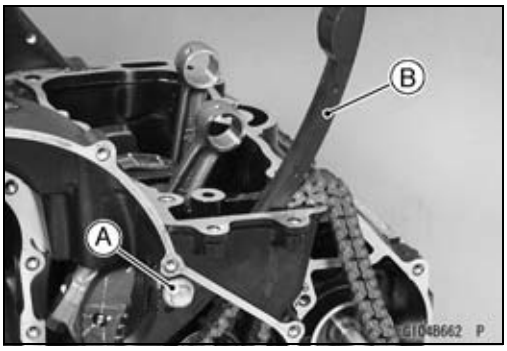

Crankcase Splitting

- Remove the upper crankcase bolts [A] and the copper plated washers.

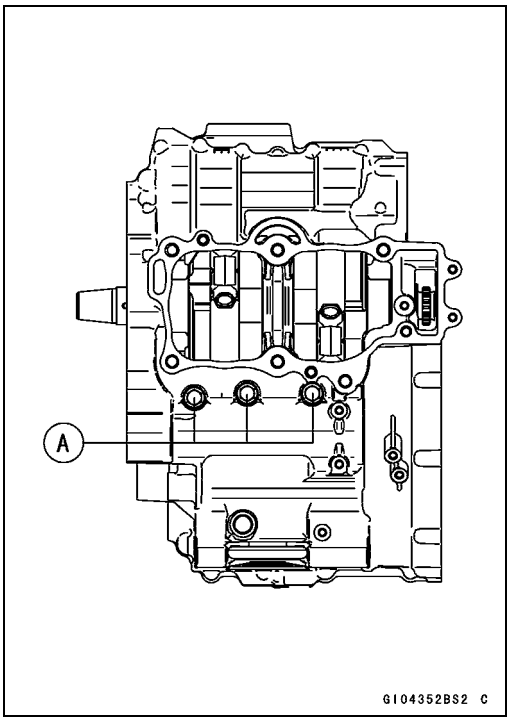

- Remove:
  Oil Pan (see Oil Pan Removal in the Engine Lubrication System chapter)
  Oil Screen (see Oil Pan Removal in the Engine Lubrication System chapter)
  Oil Pipes (see Oil Pan Removal in the Engine Lubrication System chapter)
- Remove the lower crankcase bolts, following the specified sequence.

○Firstly, loosen the M6 bolts [A].
○Secondly, loosen the M8 bolts [B].
○Lastly, loosen the M9 bolts [C] and copper plated washers.

- Tap lightly around the crankcase mating surface with a plastic mallet, and split the crankcase. Take care not to damage the crankcase.
- Remove the bearing.

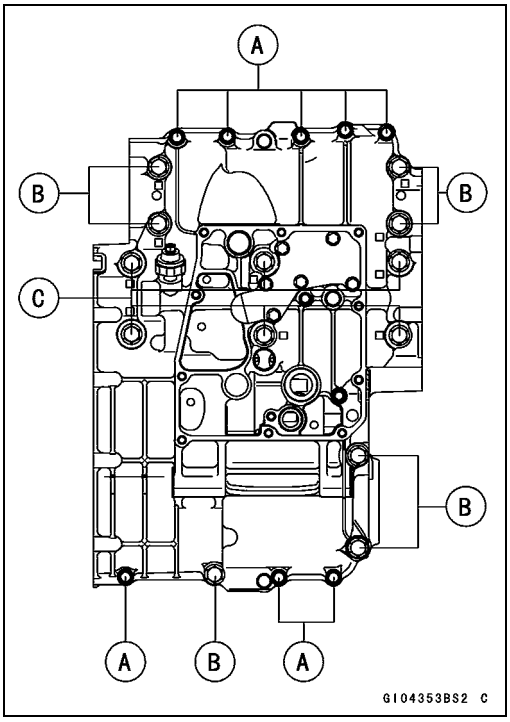

★If the oil pipe is to be removed, follow the next procedure.
○Unscrew the bolts [A] and remove the oil pipe [B].

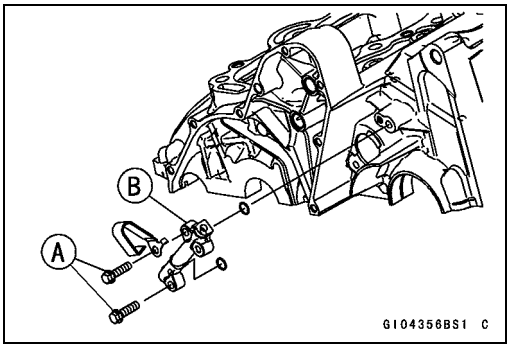

Crankcase Splitting

○Prepare a ϕ5 mm rod [A], and insert it to the hole of the upper crankcase half.
○Remove the oil pipe [B], tapping [C] the rod as shown.

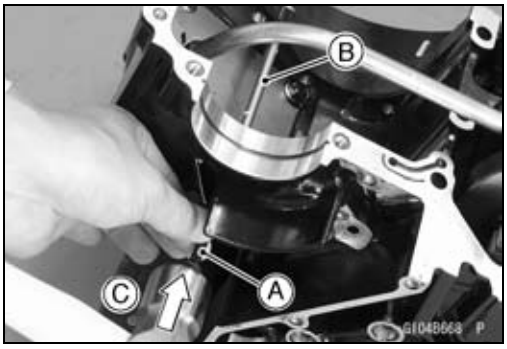

★If the breather plate [A] is to be removed, follow the next procedure.
○Remove the oil pipe (see above).
○Cut the gasket around the plate [B].
○Remove:
Breather Plate Bolts [C]
Breather Plate with Pipe [D]

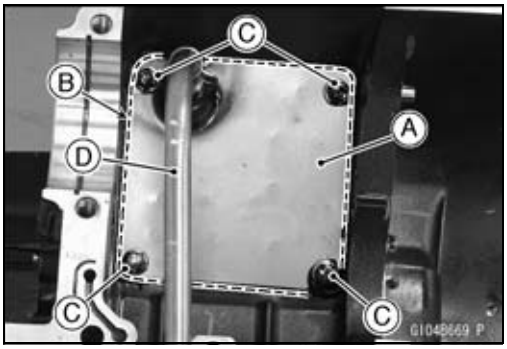

★If the oil plate [A] is to be removed, follow the next procedure.
○Remove:
Oil Plate Bolts [B]
Oil Plate

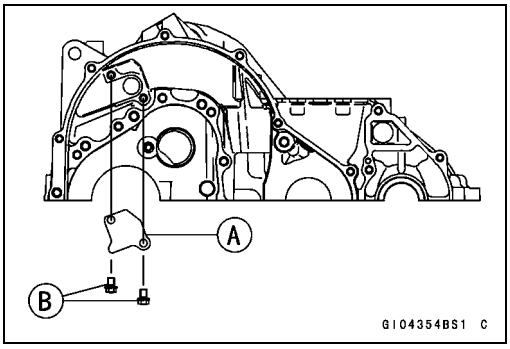

Crankcase Assembly

NOTICE

The upper and lower crankcase halves are machined at the factory in the assembled state, so the crankcase halves must be replaced as a set.

★If the oil plate [A] on the upper crankcase half was removed, install it in the following procedure.
○Apply a non-permanent locking agent to the oil plate bolts [B] and tighten them.

Torque - Oil Plate Bolts: 9.8 N·m (1.0 kfg·m, 87 in·lb)

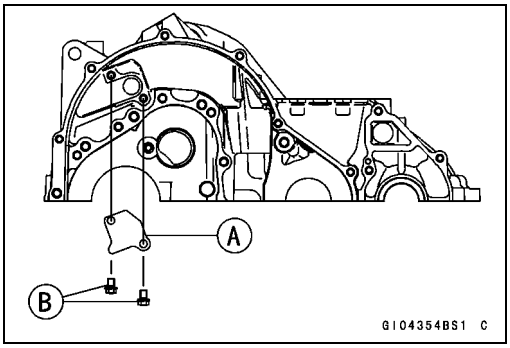

Crankcase Splitting

- When the new needle bearing [A] for the shift drum is installed in the lower crankcase half [B], press and insert [C] the new needle bearing until it is bottomed.

  Special Tool - Bearing Driver Set: 57001-1129

- When the new needle bearing [D] for the shift shaft is installed in the lower crankcase half, press and insert [E] the new needle bearing so that the bearing surface is flush with the end of hole.

○The marked side of the needle bearing faces outside of the crankcase.

Special Tool - Bearing Driver Set: 57001-1129

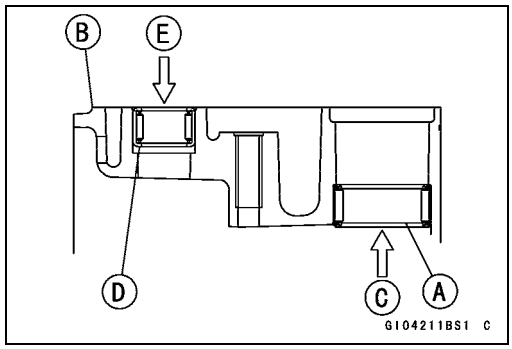

- When the new oil plug [A] and new race [B] for drive shaft is installed in the upper crankcase half [C], install them in the following procedure.

○Apply grease to the new O-rings [D].

○Clean off any oil or dirt and apply liquid gasket to the portions [E] on the upper crankcase half, and insert [F] the new oil plug until it is bottomed.

Sealant - Liquid Gasket, TB1211F: 92104-0004

○Press and insert the new race until it is bottomed.

Special Tool - Bearing Driver Set: 57001-1129

NOTE

○*Install the new race so that the stepped side [G] faces inside of the crankcase.*

○*Do not apply liquid gasket to the O-ring and the oil line.*

○Install the race holder [H] as shown.

○Apply a non-permanent locking agent to the threads of the race holder screw [I] and tighten it.

Torque - Race Holder Screw: 4.9 N·m (0.50 kgf·m, 43 in·lb)

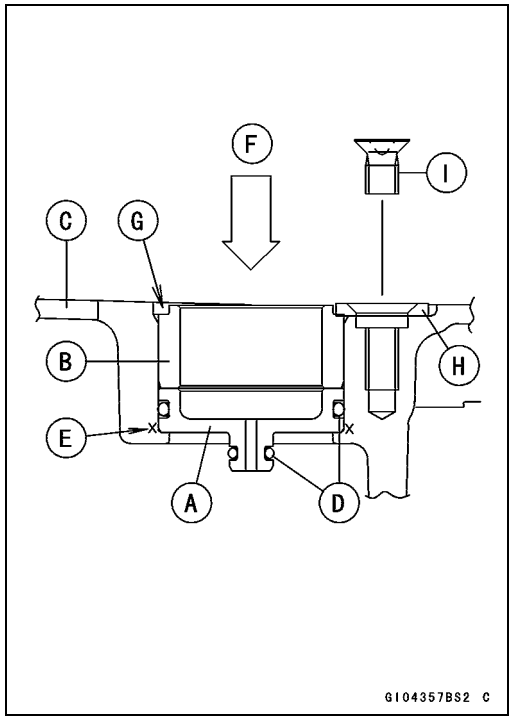

★If the breather plate was removed, install it in the following procedure.

○Clean off any oil or dirt and apply liquid gasket to the breather plate mating surface [A] 1 mm (0.04 in.) or more thick, and then install the breather plate.

Sealant - Liquid Gasket, TB1207B: 92104-2068

NOTE

○*Make the application finish within 7 minutes when the liquid gasket to the mating surface of the breather plate is applied.*

○*Moreover fit the plate and tighten the bolts just after application of the liquid gasket.*

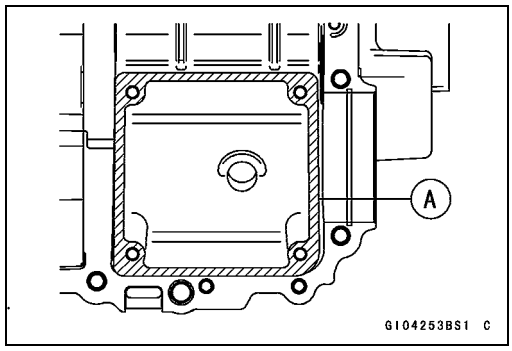

Crankcase Splitting

○Apply a non-permanent locking agent to the threads of the breather plate bolts [A] and tighten them.

Torque - Breather Plate Bolts: 9.8 N·m (1.0 kgf·m, 87 in·lb)

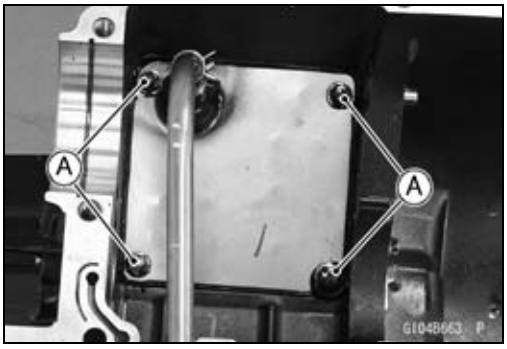

○Install the breather pipe [A].
○Align the white mark [B] on the pipe with the white mark [C] on the breather fitting.
○Install the clamps [D] so that the pinch heads [E] face the white marks.

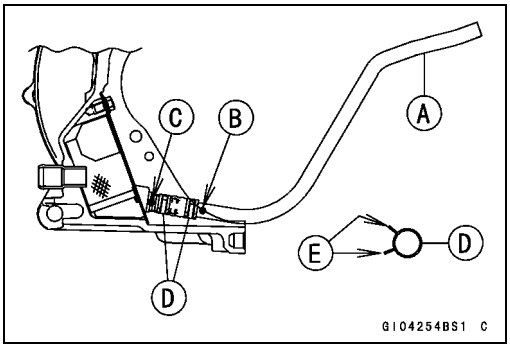

○Apply molybdenum disulfide oil solution to the edge of the oil pipe [E].
○Install the oil pipe [A] so that its flange [B] touches to the surface [C] of the upper crankcase half.
○Apply grease to the new O-ring [D] on the oil pipe.

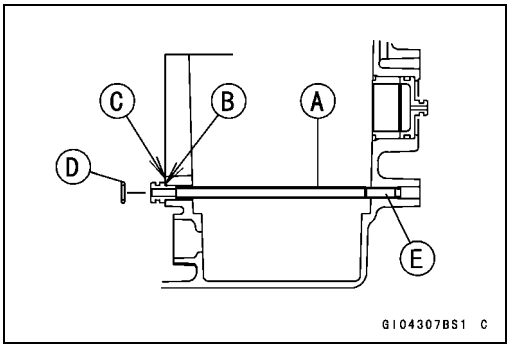

○Replace the O-rings [A] with new ones.
○Apply grease to the new O-rings.
○Apply a non-permanent locking agent to the threads of the oil pipe bolts and tighten them.

Torque - Oil Pipe Bolts: 9.8 N·m (1.0 kgf·m, 87 in·lb)

○Install the clamp with the upper oil pipe bolt.

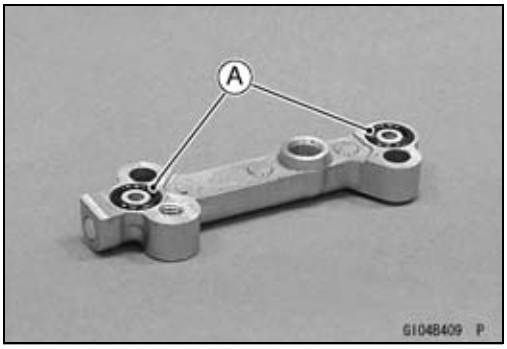

Crankcase Splitting

- Install the crankshaft and the balancer shaft on the upper crankcase half.

○Apply molybdenum disulfide oil solution to the following items.
  Crankshaft Main Bearing Insert
  Balancer Shaft Bearing Insert

○Align [A] the timing mark on the balancer gear [B] with the timing mark on the balancer drive gear [C] of the crankshaft.

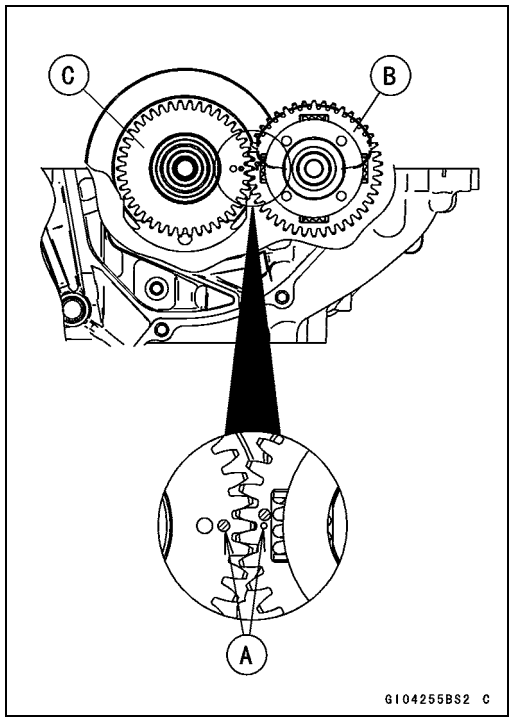

- Be sure to hang the camshaft chain [A] on the crankshaft.

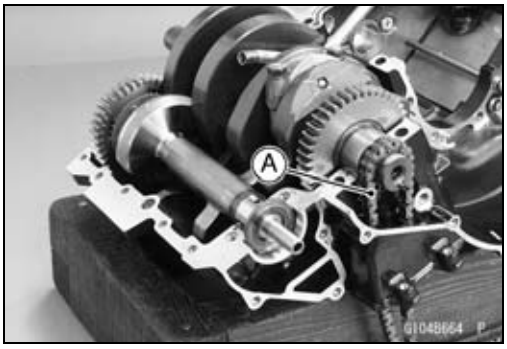

- Be sure that the dowel pins [A] are in position.

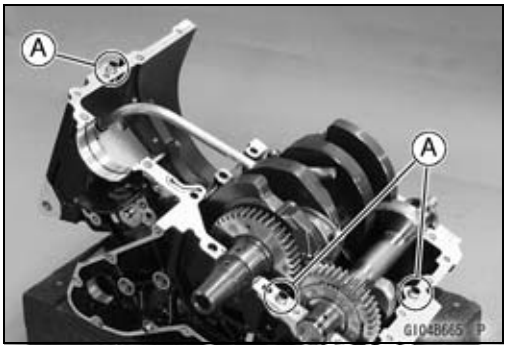

- Install the bearing [A] so that the positioning ring [B] fits into the bearing groove [C].

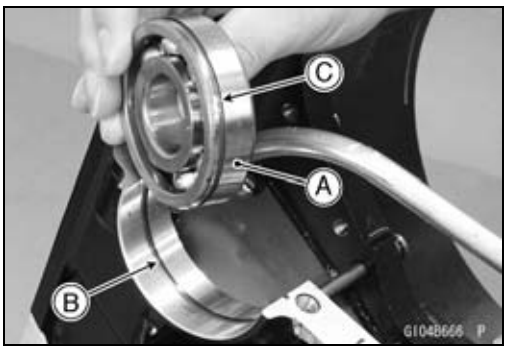

Crankcase Splitting

- With a high flash-point solvent, clean off the mating surfaces of the crankcases halves and wipe dry.
- Using compressed air, blow out the oil passages in the crankcase halves.
- Apply liquid gasket [A] to the mating surface of the lower crankcase half.

Sealant - Liquid Gasket, TB1216B: 92104-1064

NOTE

○*Especially, apply a liquid gasket carefully so that it shall be filled up on the grooves.*

NOTICE
Do not apply liquid gasket around the crankshaft main bearing inserts, and oil passage holes.

○Do not apply liquid gasket to the oil passage [B].

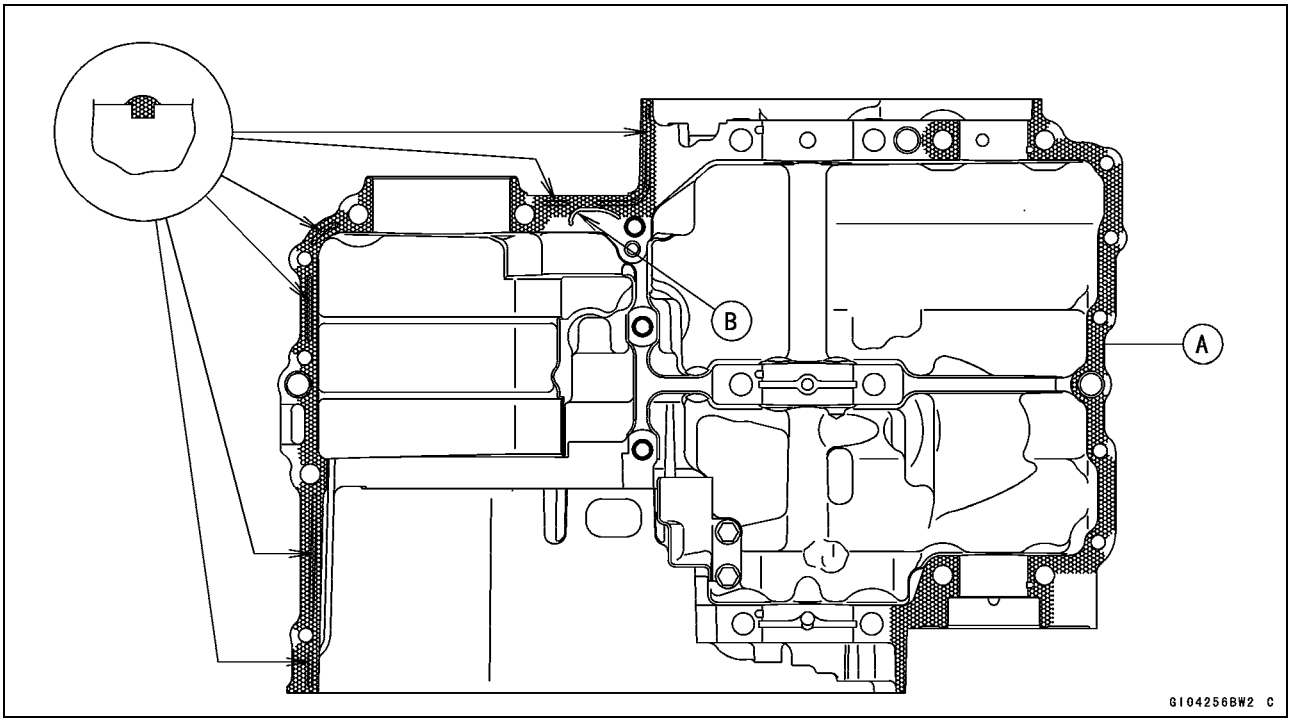

Crankcase Splitting

● Fit the lower crankcase half to the upper crankcase half.

○Insert [A] the breather pipe [B] on the upper crankcase half through the hole [C] on the lower crankcase half.

NOTE

○*Make the application finish within 20 minutes when the liquid gasket to the mating surface of the lower crankcase half is applied.*

○*Moreover fit the case and tighten the case bolts just after finishing the application of the liquid gasket.*

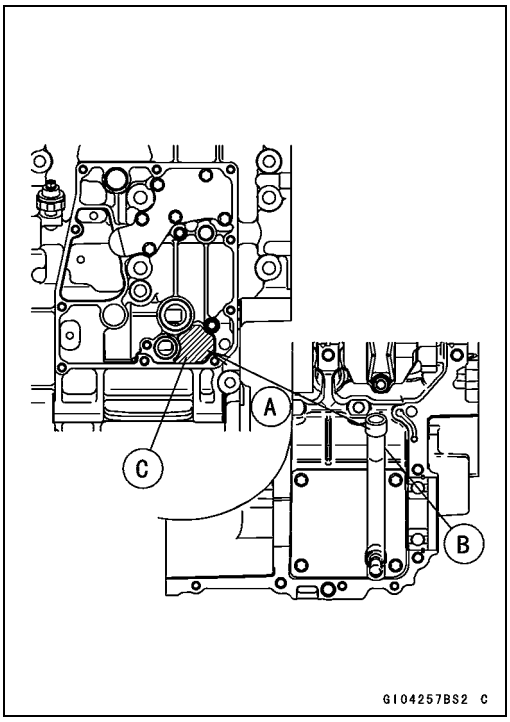

● Tighten the lower crankcase bolts following the sequence numbers on the lower crankcase half.

○The crankcase bolts (M9) [1 ~ 6] have copper plated washers, replace them with new ones.

○Apply molybdenum disulfide oil solution to both sides of the copper plated washers and the threads of the crankcase bolts (M9).

○Tighten:

Crankcase Bolts (M9) [1, 2] L= 113 mm (4.45 in.) with Copper Plated Washers

Crankcase Bolts (M9) [3, 4] L= 83 mm (3.27 in.) with Copper Plated Washers

Crankcase Bolts (M9) [5, 6] L= 113 mm (4.45 in.) with Copper Plated Washers

Torque - Crankcase Bolts (M9): 44 N·m (4.5 kgf·m, 32 ft·lb)

○Apply molybdenum disulfide oil solution to flange and the threads of the crankcase bolts (M8) [7 ~ 10].

○Tighten:

Torque - Crankcase Bolts (M8): 25.5 N·m (2.6 kgf·m, 19 ft·lb)

○Do not apply molybdenum disulfide oil solution to the crankcase bolts (M8) [A].

○Tighten:

Torque - Crankcase Bolts (M8): 27.5 N·m (2.8 kgf·m, 20 ft·lb)

Crankcase Bolts (M6): 19.6 N·m (2.0 kgf·m, 14 ft·lb)

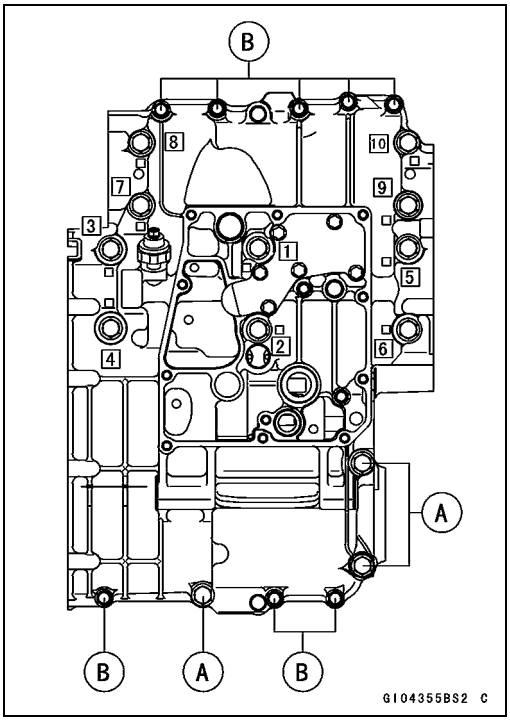

Crankcase Splitting

- The upper crankcase bolts [A] have copper plated washers, replace them with new ones.
- Tighten the upper crankcase bolts with copper plated washers.

Torque - Upper Crankcase Bolts: 27.5 N·m (2.8 kgf·m, 20 ft·lb)

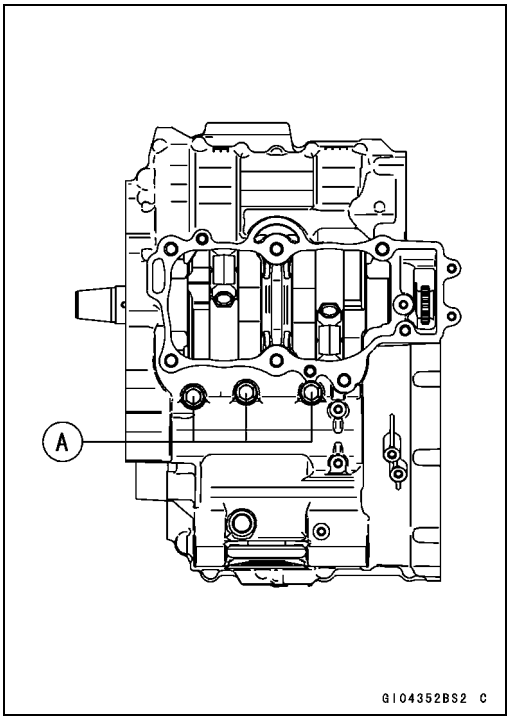

- Wipe up the liquid gasket that seeps out around the crankcase mating surface.
- Check that the crankshaft and balancer shaft turn freely.

- Install the rear camshaft chain guide [A].
- Apply a non-permanent locking agent to the rear camshaft chain guide bolt [B], and tighten it.

Torque - Rear Camshaft Chain Guide Bolt: 20 N·m (2.0 kgf·m, 15 ft·lb)

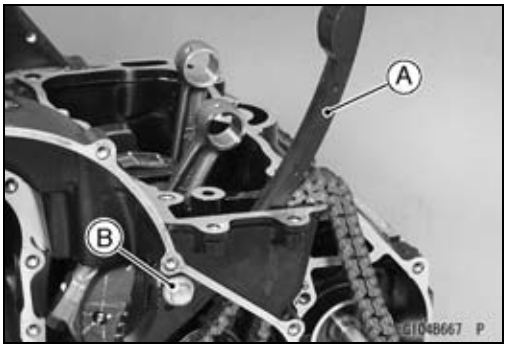

Crankshaft and Connecting Rods

Crankshaft Removal

- Split the crankcase (see Crankcase Splitting).
- Remove:
  Camshaft Chain [A]
  Crankshaft [B]

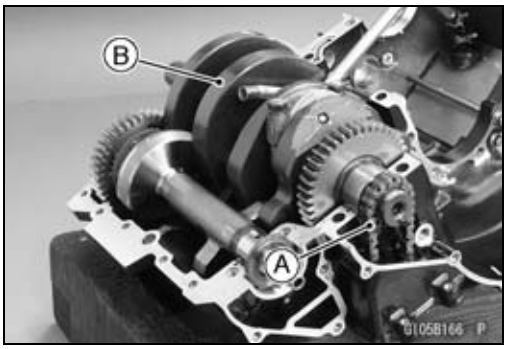

Crankshaft Installation

NOTE

○*If the crankshaft is replaced with a new one, refer to the Connecting Rod Big End Bearing/Crankshaft Main Bearing Insert Selection in the Specifications.*

NOTICE

If the crankshaft, bearing inserts, or crankcase halves are replaced with new ones, select the bearing inserts and check clearance with a plastigage (press gauge) before assembling engine to be sure the correct bearing inserts are installed.

- Apply molybdenum disulfide oil solution to the crankshaft main bearing inserts.
- Align [A] the timing mark on the balancer gear [B] with the timing mark on the balancer drive gear [C] of the crankshaft.

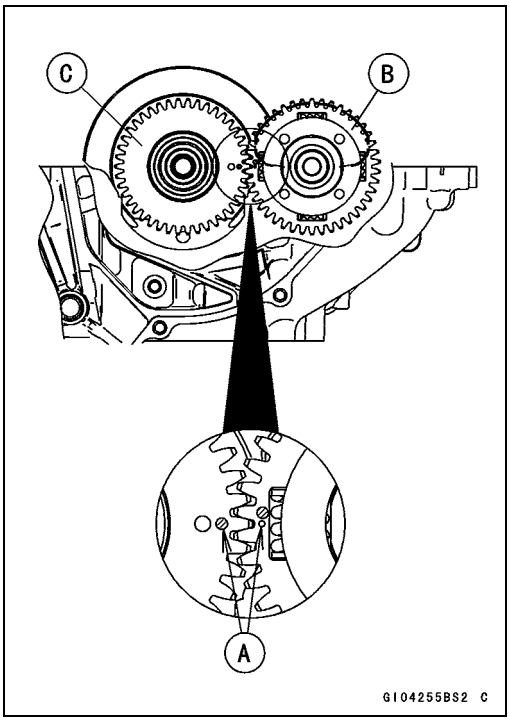

- Install the crankshaft with the camshaft chain [A] hanging on it.
- Assemble the crankcase (see Crankcase Assembly).

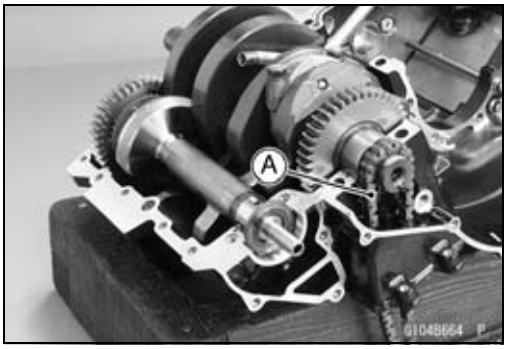

Connecting Rod Removal

- Split the crankcase (see Crankcase Splitting).
- Remove the connecting rod nuts [A].
- Remove the crankshaft (see Crankshaft Removal).

NOTE

○*Mark and record the locations of the connecting rods and their big end caps so that they can be reassembled in their original positions.*

- Remove the connecting rods from the crankshaft.

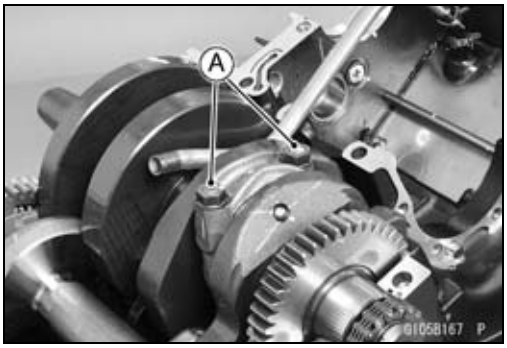

NOTICE

Discard the connecting rod bolts. To prevent damage to the crankpin surfaces, do not allow the connecting rod bolts to bump against the crankpins.

Crankshaft and Connecting Rods

Connecting Rod Installation

NOTICE

To minimize vibration, the connecting rods should have the same weight mark.

Big End Cap [A]
Connecting Rod [B]
Weight Mark, Alphabet [C]
Diameter Mark [D]: "○" or no mark

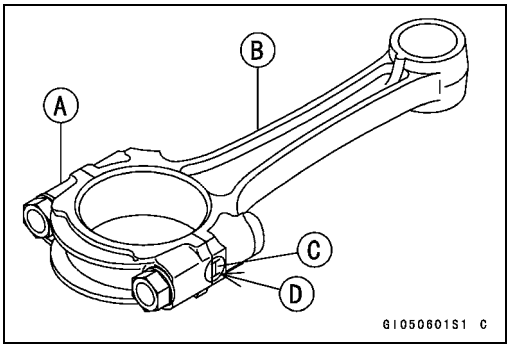

NOTICE

If the connecting rods, big end bearing inserts, or crankshaft are replaced with new ones, select the bearing insert and check clearance with a plastigage (press gauge) before assembling engine to be sure the correct bearing inserts are installed.

- Apply molybdenum disulfide oil solution [A] to the inner surfaces of upper and lower bearing inserts.

○Do not apply any grease or oil [B] to the cap inside and cap insert outside.

○Install the inserts so that their nails [C] are on the same side and fit them into the recess of the connecting rod and cap.

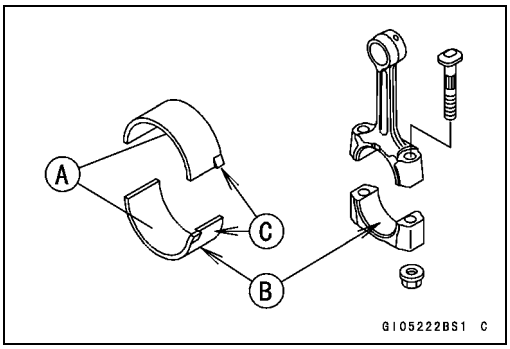

NOTICE

Wrong application of oil and grease could cause bearing damage.

○When installing the inserts [A], be careful not to damage the insert surface with the edge of the connecting rod [B] or the cap [C]. One way to install inserts is as follows.
Installation [D] to Cap
Installation [E] to Connecting Rod
Push [F]
Spare Dowel Pin [G]
Connecting Rod Bolts [H]

- Remove debris and clean the surface of inserts.
- Apply molybdenum disulfide oil solution to the threads and seating surfaces of the big end nuts and bolts.

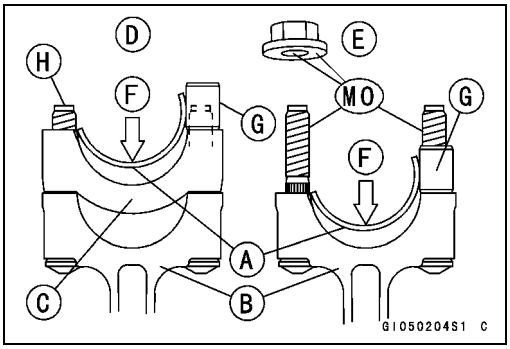

- Install the crankshaft (see Crankshaft Installation).
- Install each connecting rod on its original crankpin.

NOTE

○*Install each connecting rod so that its oil jet [A] faces the exhaust side (the front [B]) (see Engine Oil Flow Chart in the Engine Lubrication System chapter).*

- Install the cap on the connecting rod, aligning the weight and diameter marks.

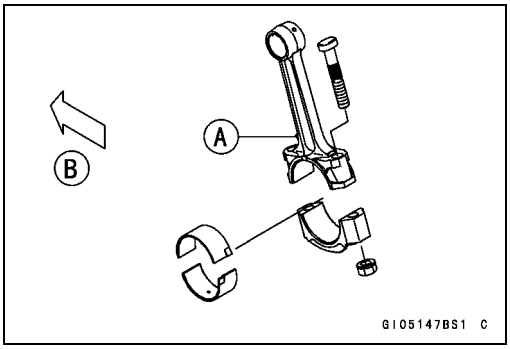

Crankshaft and Connecting Rods

○The connecting rod big end is bolted using the “plastic region fastening method”.
○This method precisely achieves the needed clamping force without exceeding it unnecessarily, allowing the use of thinner, lighter bolts further decreasing connecting rod weight.
○There are two types of the plastic region fastening. One is a bolt length measurement method and other is a rotation angle method. Observe one of the following two, but the bolt length measurement method is preferable because this is a more reliable way to tighten the big end nuts.

NOTICE

The connecting rod bolts are designed to stretch when tightened. Never reuse the connecting rod bolts. See the table below for correct bolt and nut usage.

NOTICE

Be careful not to overtighten the nuts.
The bolts must be positioned on the seating surface correctly to prevent the bolt heads from hitting the crankcase.

(1) Bolt Length Measurement Method
● Be sure to clean the bolts, nuts, and connecting rods thoroughly with a high flash-point solvent, because the new connecting rods, bolts, and nuts are treated with an anti-rust solution.

⚠ WARNING

Gasoline and low flash-point solvents can be flammable and/or explosive and cause severe burns. Clean the bolts, nuts, and connecting rods in a well-ventilated area, and take care that there are no sparks or flame anywhere near the working area; this includes any appliance with a pilot light. Do not use gasoline or a low flash-point solvent to clean them.

NOTICE

Immediately dry the bolts and nuts with compressed air after cleaning.
Clean and dry the bolts and nuts completely.

Crankshaft and Connecting Rods

- Install new bolts in reused connecting rods.
- Dent both bolt head and bolt tip with a punch as shown.
- Before tightening, use a point micrometer to measure the length of new connecting rod bolts and record the values to find the bolt stretch.
  Connecting Rod [A]
  Mark here with a punch [B].
  Nuts [C]
  Fit micrometer pins into punch marks [D].

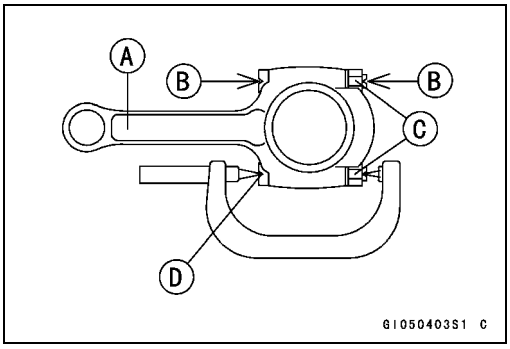

- Apply a small amount of molybdenum disulfide oil solution to the following.
  Threads [A] of Nuts and Bolts
  Seating Surfaces [B] of Nuts and Connecting Rods
- Tighten the big end nuts until the bolt elongation reaches the length specified in the table.
- Check the length of the connecting rod bolts.

★If the stretch is more than the usable range, the bolt has stretched too much. An overelongated bolt may break in use.

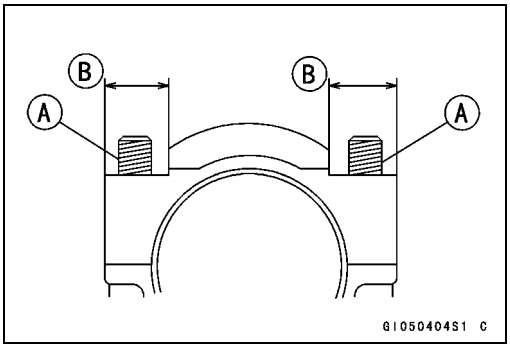

Bolt Length after tightening – Bolt Length before tightening = Bolt Stretch

Connecting Rod Assy	Bolt	Nut	Usable Range of Connecting Rod Bolt Stretch
New	Use the bolts attached to new connecting rod.	Attached to new connecting rod	0.24 ~ 0.36 mm (0.0094 ~ 0.0142 in.)
		New	
Used	Replace the bolts with new ones.	Used	0.20 ~ 0.32 mm (0.0079 ~ 0.0126 in.)
		New	

(2) Rotation Angle Method

★If you don't have a point micrometer, you may tighten the nuts using the "Rotation Angle Method".

- Be sure to clean the bolts and nuts thoroughly with a high flash-point solvent, because the new bolts and nuts are treated with an anti-rust solution.

⚠ WARNING

Gasoline and low flash-point solvents can be flammable and/or explosive and cause severe burns. Clean the bolts and nuts in a well-ventilated area, and take care that there are no sparks or flame anywhere near the working area; this includes any appliance with a pilot light. Do not use gasoline or a low flash-point solvent to clean the bolts and nuts.

NOTICE

Immediately dry the bolts and nuts with compressed air after cleaning.
Clean and dry the bolts and nuts completely.

Crankshaft and Connecting Rods

- Install new bolts in reused connecting rods.
- Apply a small amount of molybdenum disulfide oil solution to the following.
  Threads [A] of Nuts and Bolts
  Seating Surfaces [B] of Nuts and Connecting Rods

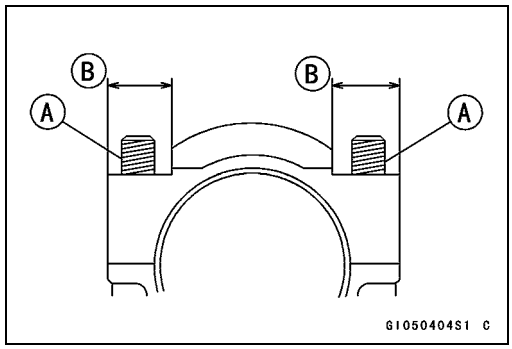

- First, tighten the nuts to the specified torque. See the table below.
- Next, tighten the nuts **120° ±5°** .

○Mark [A] the connecting rod big end caps and nuts so that nuts can be turned 120° [B] properly.

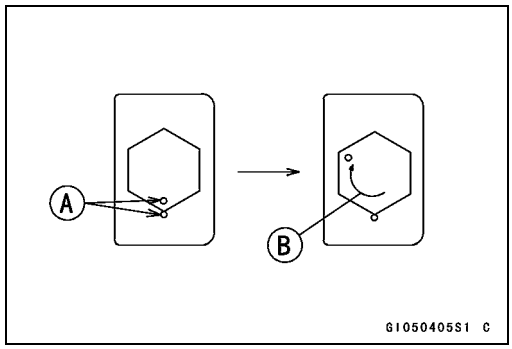

Connecting Rod Assy	Bolt	Nut	Torque + Angle N·m (kgf·m, ft·lb)
New	Use the bolts attached to new connecting rod.	Attached to new connecting rod	18 (1.8, 13.0) + 120°
		New	20 (2.0, 15) + 120°
Used	Replace the bolts with new ones.	Used	24 (2.4, 17.4) + 120°
		New	25 (2.6, 18.8) + 120°

Crankshaft/Connecting Rod Cleaning

- After removing the connecting rods from the crankshaft, clean them with a high flash-point solvent.
- Blow the crankshaft oil passages with compressed air to remove any foreign particles or residue that may have accumulated in the passages.

Connecting Rod Bend Inspection

- Remove the connecting rod big end bearing inserts, and reinstall the connecting rod big end cap.
- Select an arbor [A] of the same diameter as the connecting rod big end, and insert the arbor through the connecting rod big end.
- Select an arbor of the same diameter as the piston pin and at least 100 mm (3.94 in.) long, and insert the arbor [B] through the connecting rod small end.
- On a surface plate, set the big-end arbor on V block [C].
- With the connecting rod held vertically, use a height gauge to measure the difference in the height of the arbor above the surface plate over a 100 mm (3.94 in.) length to determine the amount of connecting rod bend.

★If connecting rod bend exceeds the service limit, the connecting rod must be replaced.

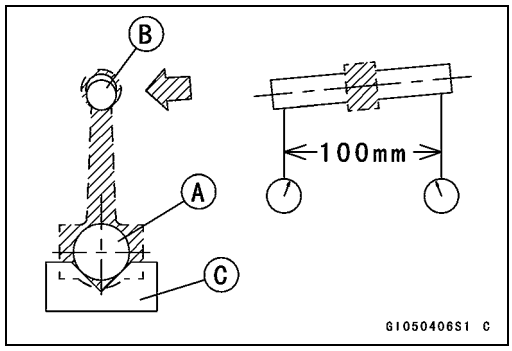

Connecting Rod Bend
Service Limit: TIR 0.2/100 mm (0.008/3.94 in.)

Crankshaft and Connecting Rods

Connecting Rod Twist Inspection

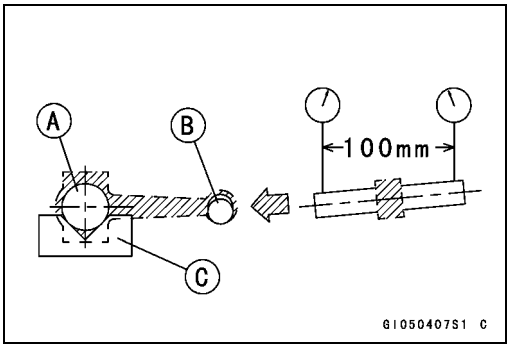

- With the big-end arbor [A] still on V block [C], hold the connecting rod horizontally and measure the amount that the arbor [B] varies from being paralleled with the surface plate over a 100 mm (3.94 in.) length of the arbor to determine the amount of connecting rod twist.

★If connecting rod twist exceeds the service limit, the connecting rod must be replaced.

Connecting Rod Twist
Service Limit: TIR 0.2/100 mm (0.008/3.94 in.)

Connecting Rod Big End Side Clearance Inspection

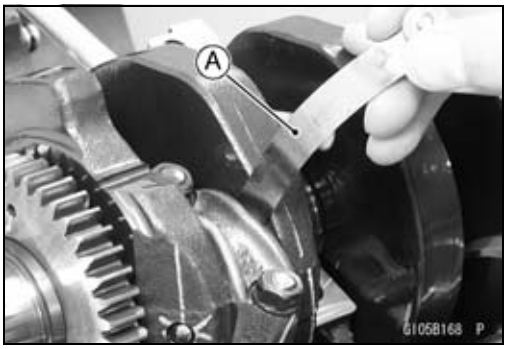

- Measure connecting rod big end side clearance.

○Insert a thickness gauge [A] between the big end and either crank web to determine clearance.

Connecting Rod Big End Side Clearance
Standard: 0.13 ~ 0.38 mm (0.0051 ~ 0.0150 in.)
Service Limit: 0.58 mm (0.023 in.)

★If the clearance exceeds the service limit, replace the connecting rod with new one and then check clearance again. If the clearance is too large after connecting rod replacement, the crankshaft also must be replaced.

Connecting Rod Big End Bearing Insert/Crankpin Wear Inspection

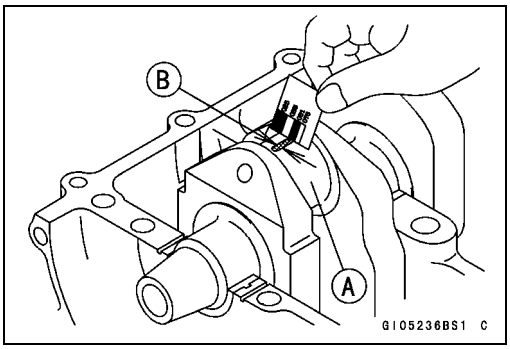

- Measure the bearing insert/crankpin [A] clearance [B] with plastigage.
- Tighten the big end nuts to the specified torque (see Connecting Rod Installation).

NOTE

○*Do not move the connecting rod and crankshaft during clearance measurement.*

NOTICE

After measurement, replace the connecting rod bolts and nuts.

Connecting Rod Big End Bearing Insert/Crankpin Clearance
Standard: 0.017 ~ 0.041 mm (0.0007 ~ 0.0016 in.)
Service Limit: 0.08 mm (0.003 in.)

Crankshaft and Connecting Rods

★If the clearance is within the standard, no bearing replacement is required.
★If the clearance is between 0.042 mm (0.00165 in.) and the service limit (0.08 mm, 0.003 in.), replace the bearing inserts [A] with inserts painted blue [B]. Check insert/crankpin clearance with the plastigage. The clearance may exceed the standard slightly, but it must not be less than the minimum in order to avoid bearing seizure.
★If the clearance exceeds the service limit, measure the diameter of the crankpins.

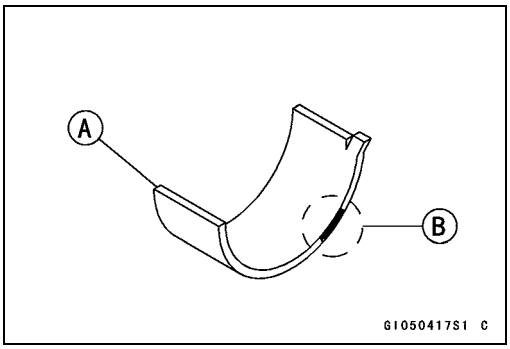

Crankpin Diameter

Standard:	**37.984 ~ 38.000 mm (1.4954 ~ 1.4961 in.)**
Service Limit:	**37.97 mm (1.4949 in.)**

★If any crankpin has worn past the service limit, replace the crankshaft with a new one.
★If the measured crankpin diameters are not less than the service limit, but do not coincide with the original diameter markings on the crankshaft, make new marks on it.

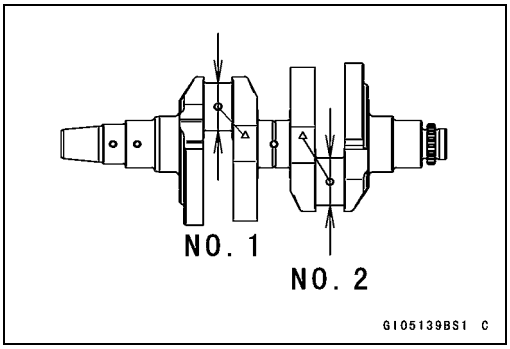

Crankpin Diameter Marks

None	**37.984 ~ 37.992 mm (1.4954 ~ 1.4957 in.)**
○	**37.993 ~ 38.000 mm (1.4958 ~ 1.4961 in.)**

Δ: Crankpin Diameter Marks, "○" or no mark.

- Measure the connecting rod big end inside diameter, and mark each connecting rod big end in accordance with the inside diameter.
- Tighten the connecting rod big end nuts to the specified torque (see Connecting Rod Installation).

NOTE

○*The mark already on the big end should almost coincide with the measurement.*

Connecting Rod Big End Inside Diameter Marks

None	**41.000 ~ 41.008 mm (1.6142 ~ 1.6145 in.)**
○	**41.009 ~ 41.016 mm (1.6145 ~ 1.6148 in.)**

Big End Cap [A]
Connecting Rod [B]
Weight Mark, Alphabet [C]
Diameter Mark (Around Weight Mark) [D]: "○" or no mark

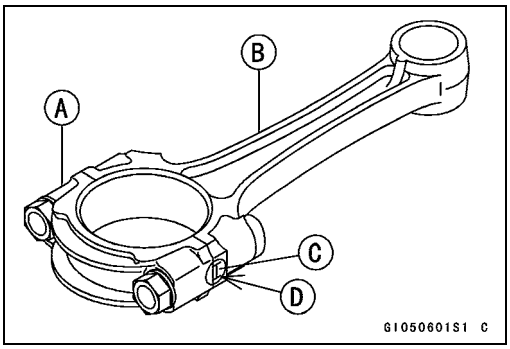

Crankshaft and Connecting Rods

● Select the proper bearing insert [A] in accordance with the combination of the connecting rod and crankshaft coding.
Size Color [B]

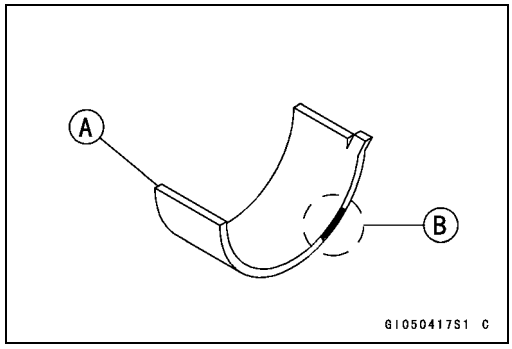

Connecting Rod Big End Inside Diameter Marking	Crankpin Diameter Marking	Bearing Insert	
		Size Color	Part Number
None	○	Brown	92139-0116
None	None	Black	92139-0115
○	○		
○	None	Blue	92139-0114

● Install the new inserts in the connecting rod and check insert/crankpin clearance with the plastigage.

Crankshaft Side Clearance Inspection

● Insert a thickness gauge [A] between the crankcase main bearing and the crank web at the No. 2 journal [B] to determine clearance.

★If the clearance exceeds the service limit, replace the crankcase halves as a set.

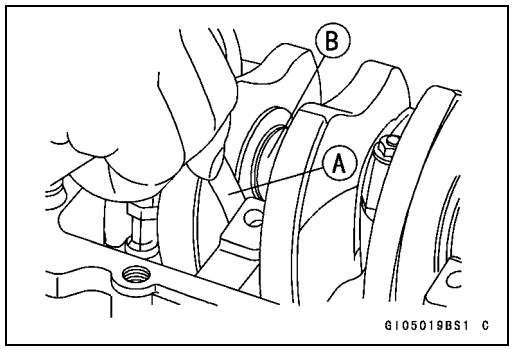

NOTE

○*The upper and lower crankcase halves are machined at the factory in the assembled state, so the crankcase halves must be replaced as a set.*

Crankshaft Side Clearance

Standard: 0.05 ~ 0.20 mm (0.0020 ~ 0.0079 in.)

Service Limit: 0.40 mm (0.016 in.)

Crankshaft Runout Inspection

● Measure the crankshaft runout.

★If the measurement exceeds the service limit, replace the crankshaft.

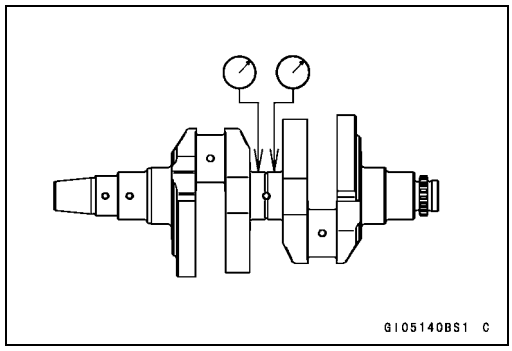

Crankshaft Runout

Standard: TIR 0.02 mm (0.0008 in.) or less

Service Limit: TIR 0.05 mm (0.002 in.)

Crankshaft and Connecting Rods

Crankshaft Main Bearing Insert/Journal Wear Inspection

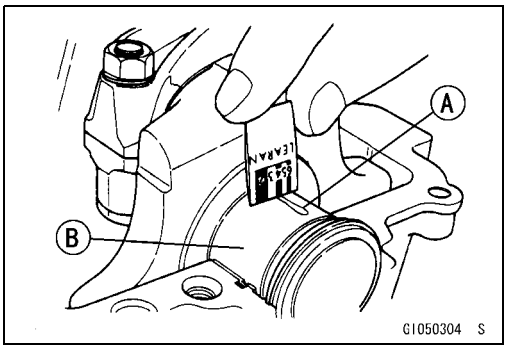

- Using a plastigage (press gauge) [A], measure the bearing insert/journal [B] clearance.

NOTE

○*Tighten the crankcase bolts to the specified torque (see Crankcase Assembly).*

○*Do not turn the crankshaft during clearance measurement.*

○*Journal clearance less than 0.025 mm (0.00098 in.) can not be measured by plastigage, however, using genuine parts maintains the minimum standard clearance.*

Crankshaft Main Bearing Insert/Journal Clearance

Standard: 0.017 ~ 0.041 mm (0.0007 ~ 0.0016 in.)

Service Limit: 0.07 mm (0.003 in.)

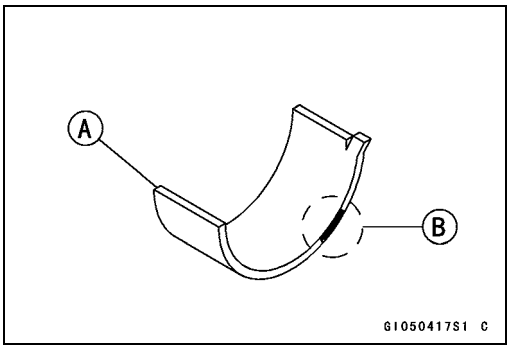

★If the clearance is within the standard, no bearing replacement is required.

★If the clearance is between 0.042 mm (0.0017 in.) and the service limit (0.07 mm, 0.003 in.), replace the bearing inserts [A] with inserts painted blue [B]. Check insert/journal clearance with the plastigage. The clearance may exceed the standard slightly, but it must not be less than the minimum in order to avoid bearing seizure.

★If the clearance exceeds the service limit, measure the diameter of the crankshaft main journal.

Crankshaft Main Journal Diameter

Standard: 37.984 ~ 38.000 mm (1.4954 ~ 1.4961 in.)

Service Limit: 37.96 mm (1.4945 in.)

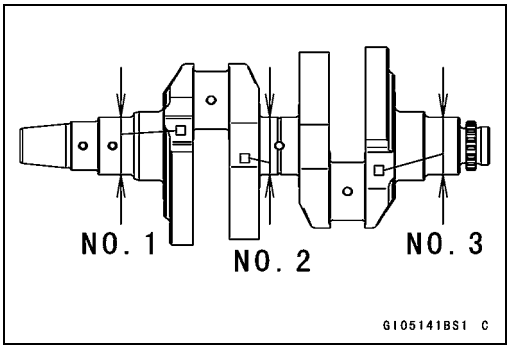

★If any journal has worn past the service limit, replace the crankshaft with a new one.

★If the measured journal diameters are not less than the service limit, but do not coincide with the original diameter markings on the crankshaft, make new marks on it.

Crankshaft Main Journal Diameter Marks

None 37.984 ~ 37.992 mm (1.4954 ~ 1.4957 in.)

1 37.993 ~ 38.000 mm (1.4958 ~ 1.4961 in.)

□: Crankshaft Main Journal Diameter Marks, “1” or no mark.

Crankshaft and Connecting Rods

- Measure the main bearing inside diameter, and mark the upper crankcase half in accordance with the inside diameter.
  Crankcase Main Bearing Inside Diameter Marks: "○" or no mark.
- Tighten the crankcase bolts to the specified torque (see Crankcase Assembly).

NOTE

○*The mark already on the upper crankcase half should almost coincide with the measurement.*

Crankcase Main Bearing Inside Diameter Marks

○	**41.000 ~ 41.008 mm (1.6142 ~ 1.6145 in.)**
None	**41.009 ~ 41.016 mm (1.6145 ~ 1.6148 in.)**

□□□: Crankcase Main Bearing Inside Diameter Marks, "○" mark or no mark

No.1 Journal [A]
No.2 Journal [B]
No.3 Journal [C]

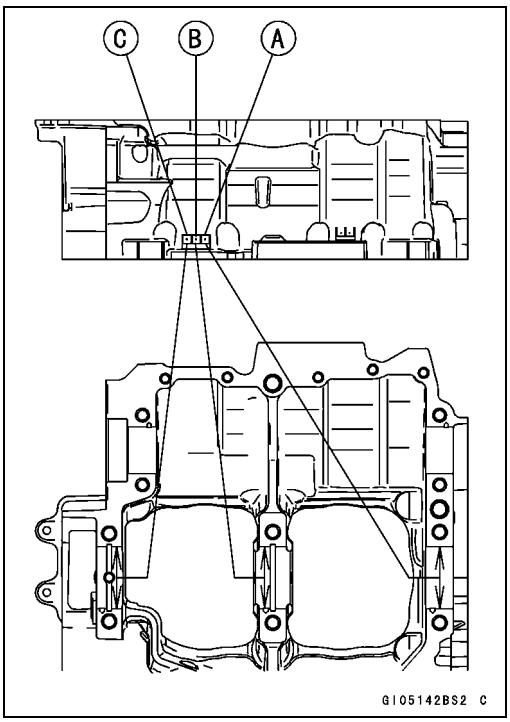

- Select the proper bearing insert [A] in accordance with the combination of the crankcase and crankshaft coding.
  Size Color [B]

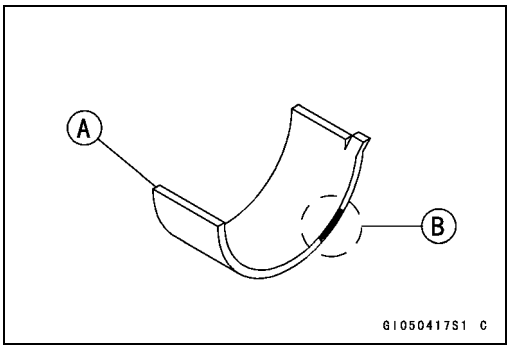

Crankcase Main Bearing Inside Diameter Marking	Crankshaft Main Journal Diameter Marking	Bearing Insert*	
		Size Color	Part Number
○	1	Brown	92028-1905
None	1	Black	92028-1904
○	None		
None	None	Blue	92028-1903

* The bearing inserts for Nos. 1, 2 and 3 journals have oil groove.

- Install the new inserts in the crankcase halves and check insert/journal clearance with the plastigage.

Balancer

Balancer Removal

- Split the crankcase (see Crankcase Splitting).
- Pull the balancer shaft [A] with the balancer gear out of the crankcase.

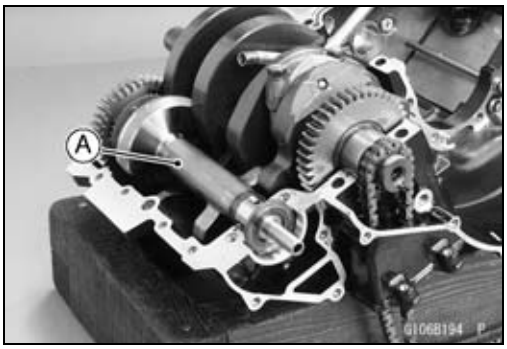

Balancer Installation

- Apply molybdenum disulfide oil solution to the inside of the balancer shaft bearing insert.
- Align [A] the timing mark on the balancer gear [B] with the timing mark on the balancer drive gear [C] of the crankshaft.
- Assemble the crankcase (see Crankcase Assembly).

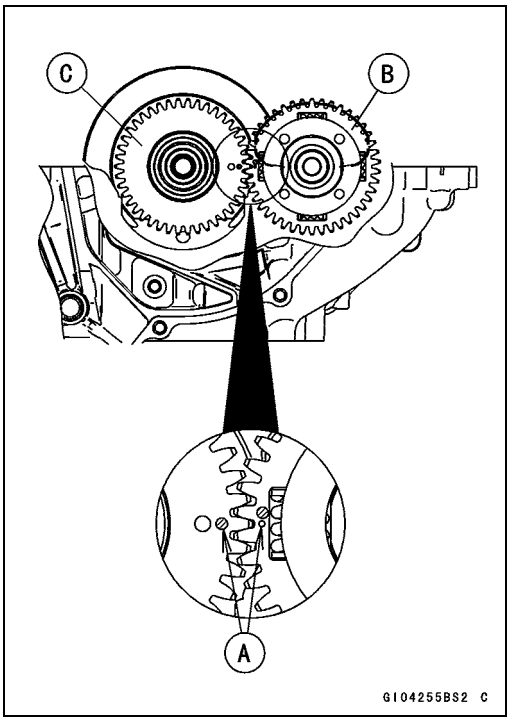

Balancer Shaft Bearing Insert/Journal Clearance Inspection

- Measure the bearing insert/journal clearance using a plastigage.

○Split the crankcase and wipe each bearing insert and journal surface clean of oil.

○Cut strips of plastigage to bearing insert width, and place a strip on each journal parallel to the balancer shaft so that the plastigage will be compressed between the journal and the bearing insert.

○Install the lower crankcase half, and tighten the case bolts to the specified torque (see Crankcase Assembly).

Balancer

NOTE

○*Do not turn the balancer shaft during clearance measurement.*

○Remove the lower crankcase half and measure the plastigage width [A] to determine the bearing insert/journal [B] clearance.

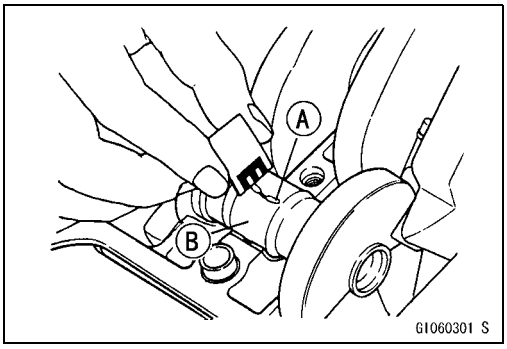

Balancer Shaft Bearing Insert/Journal Clearance

Standard: 0.011 ~ 0.033 mm (0.0004 ~ 0.0013 in.)

Service Limit: 0.06 mm (0.002 in.)

★If the clearance is within the standard, no bearing insert replacement is required.

★If the clearance is between 0.034 mm (0.00134 in.) and the service limit (0.08 mm (0.003 in.)), replace the bearing inserts [A] with inserts painted blue [B] Check insert/journal clearance with a plastigage. The clearance may exceed the standard slightly, but it must not be less than the minimum in order to avoid bearing seizure.

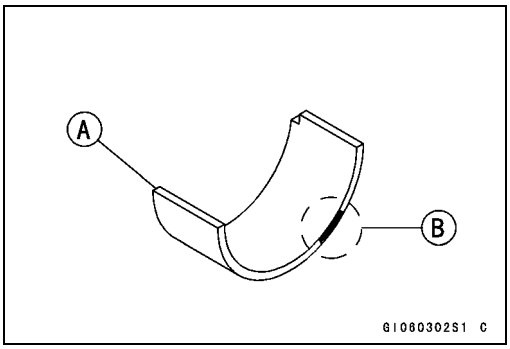

★If the clearance exceeds the service limit, measure the diameter of the balancer shaft journal.

Balancer Shaft Journal Diameter

Standard: 27.987 ~ 28.000 mm (1.1019 ~ 1.1024 in.)

Service Limit: 27.96 mm (1.1008 in.)

★If either journal has worn past the service limit, replace the balancer shaft with a new one.

★If the measured journal diameters are not less than the service limit, but do not coincide with the original diameter markings on the balancer shaft, write new marks on it.

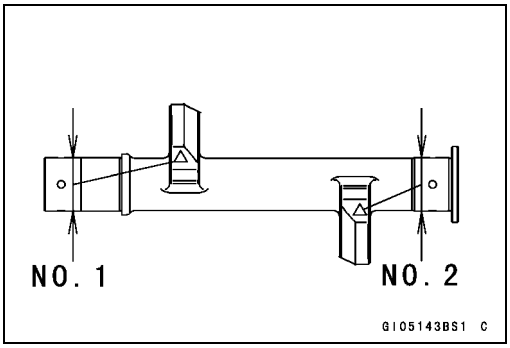

Balancer Shaft Diameter Marks

None 27.987 ~ 27.993 mm (1.1019 ~ 1.1021 in.)

○ 27.994 ~ 28.000 mm (1.1021 ~ 1.1024 in.)

Δ: Balancer Shaft Journal Diameter Marks, "○" mark or no mark.

Balancer

- Put the lower crankcase half on the upper crankcase half without bearing inserts, and tighten the case bolts to the specified torque and sequence (see Crankcase Assembly).
- Measure the crankcase bearing bore diameter for the balancer shaft, and mark the upper crankcase half in accordance with the bore diameter.

NOTE

○The mark already on the upper crankcase half should almost coincide with the measurement.

Crankcase Bearing Bore Diameter Marks

○ 31.000 ~ 31.008 mm (1.2205 ~ 1.2208 in.)

None 31.009 ~ 31.016 mm (1.2208 ~ 1.2211 in.)

□□: Crankcase Bearing Bore Diameter Marks, "○" mark or no mark.

No.1 Journal [A]
No.2 Journal [B]

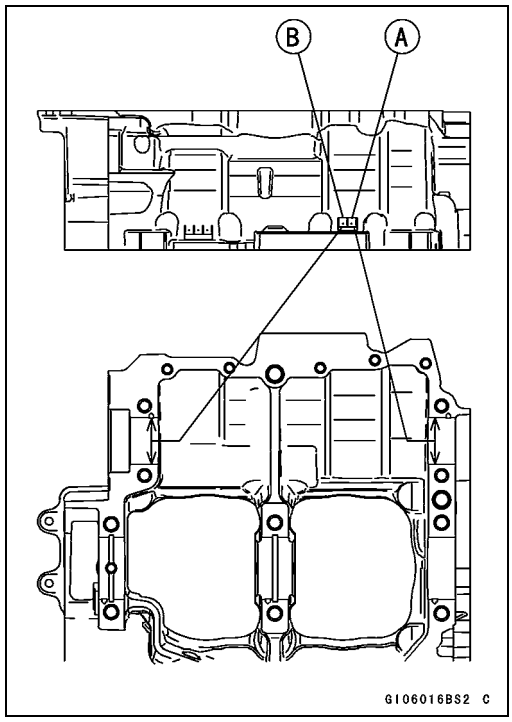

- Select the proper bearing insert in accordance with the combination of the crankcase and the balancer shaft coding.
- Install the new inserts in the crankcase and check insert/journal clearance with a plastigage.

Crankcase Bearing Inside Diameter Marking	Balancer Shaft Journal Diameter Marking	Bearing Insert*	
		Size Color	Part Number
○	○	Brown	92139-0119
○	None	Black	92139-0118
None	○		
None	None	Blue	92139-0117

*The bearing insert for Nos. 1 and 2 journals have oil grooves.

External Shift Mechanism

Shift Pedal Removal

- Remove:
  Shift Pedal Bolt [A]
  Shift Pedal [B]

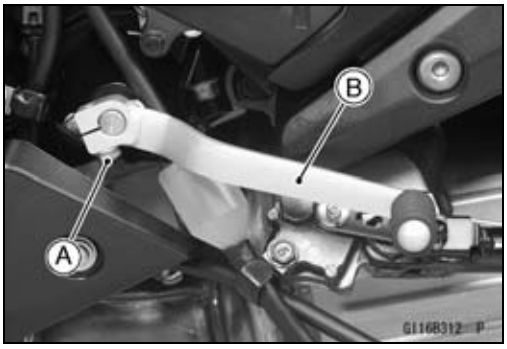

Shift Pedal Installation

- Install the shift pedal [A] to the shift shaft.

○Align the punch mark [B] on the shift shaft with the punch mark [C] on the shift pedal.

- Tighten:

Torque - Shift Pedal Bolt: 12 N·m (1.2 kgf·m, 106 in·lb)

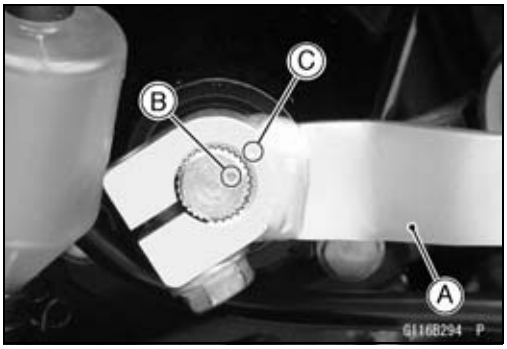

- Be sure the shift pedal [A] position is as shown in the figure.

External Shift Mechanism Removal

- Drain the engine oil (see Engine Oil Change in the Periodic Maintenance chapter).
- Remove:
  Engine Sprocket (see Engine Sprocket Removal in the Final Drive chapter)
  Shift Pedal (see Shift Pedal Removal)
  Neutral Switch Lead Connector [A]
  Shift Shaft Cover Bolts [B]
  Shift Shaft Cover Screw [C]
  Shift Shaft Cover [D]

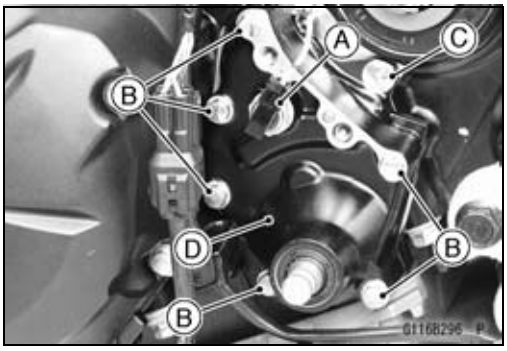

- Remove the shift shaft assembly [A].

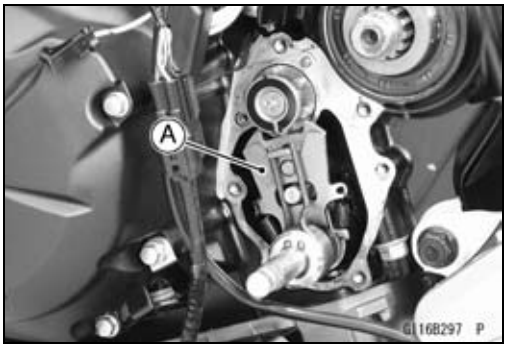

External Shift Mechanism

- Remove:
  Clutch (see Clutch Removal in the Clutch chapter)
  Gear Positioning Lever Bolt [A]
  Spacer [B]
  Gear Positioning Lever [C]
  Washer and Spring

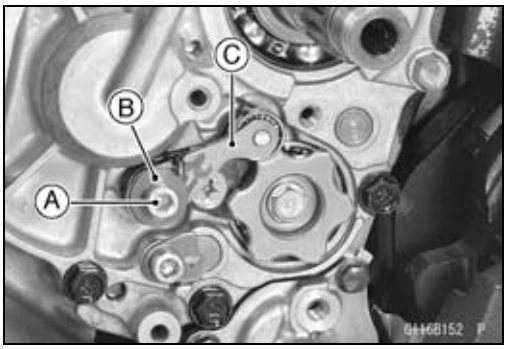

External Shift Mechanism Installation

- Install the gear positioning lever [A] as shown in the figure.
  Spring [B]
  Washer [C]
  Spacer [D]
  Gear Positioning Lever Bolt [E]

○Hook the spring at gear positioning lever, pushing up [F] the hook portion, as shown in the figure.

- Apply a non-permanent locking agent to the gear positioning lever bolt and tighten it.

Torque - Gear Positioning Lever Bolt: 12 N·m (1.2 kgf·m, 106 in·lb)

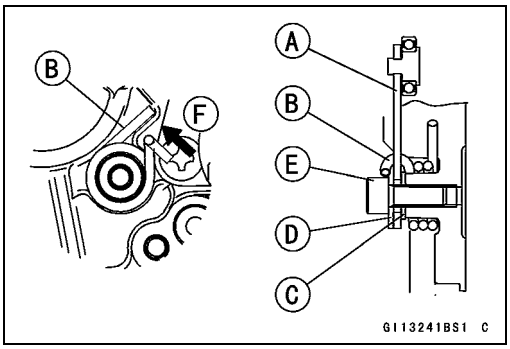

- Apply molybdenum disulfide oil solution to the rubbing surface [A] between the lever [B] and pawl [C], and move them two or three times up and down to lubricate them.
- Be sure that the collar [D] is on the shaft.
- Be sure that the spring hook portions [E] are as shown.

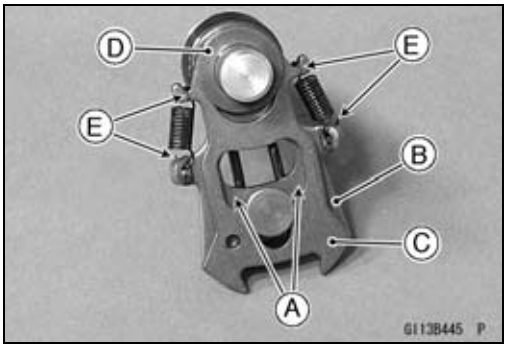

- Install the shift shaft assembly [A].
- Be sure that the washer [B] is on the shaft.
- Be sure that the dowel pins [C] are in position.

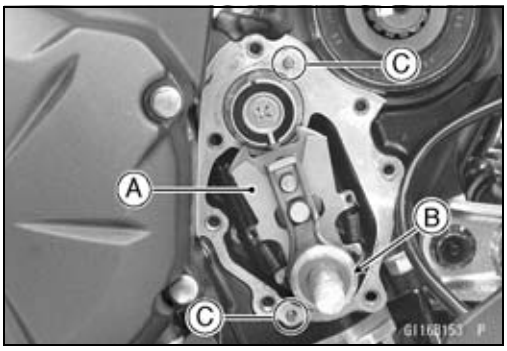

- When the new needle bearing [A] is installed in the shift shaft cover [B], press and insert the new needle bearing until it is bottomed.

Special Tool - Bearing Driver Set: 57001-1129

- When the new oil seal [C] is installed in the shift cover, press and insert the new oil seal so that its surface is flush with the end of the hole.

Special Tool - Bearing Driver Set: 57001-1129

- Apply engine oil to the needle bearing.
- Apply grease to the oil seal lips.

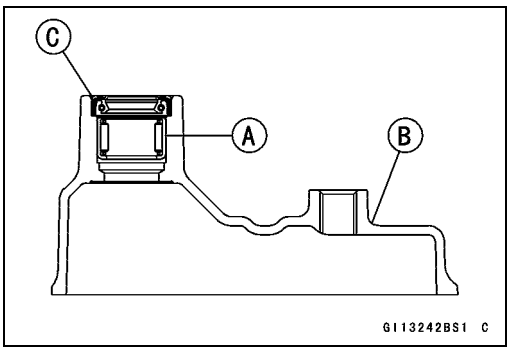

External Shift Mechanism

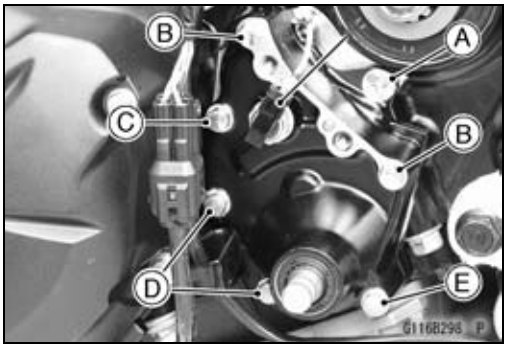

- Replace the shift shaft cover gasket with a new one.
- Install the shift shaft cover.
- Apply a non-permanent locking agent to the shift shaft cover screw [A].
- Apply a non-permanent locking agent to the shift shaft cover bolts [B, C].
  [B] L = 45 mm (1.8 in.)
  [C] L = 30 mm (1.2 in.)

○Do not apply a non-permanent locking agent to the shift shaft cover bolts [D, E].
  [D] L = 30 mm (1.2 in.)
  [E] L = 40 mm (1.6 in.)

- First tighten the shift shaft cover bolts, then tighten the shift shaft cover screw.

Torque - Shift Shaft Cover Bolts: 9.8 N·m (1.0 kgf·m, 87 in·lb)
Shift Shaft Cover Screw: 4.9 N·m (0.50 kgf·m, 43 in·lb)

External Shift Mechanism Inspection

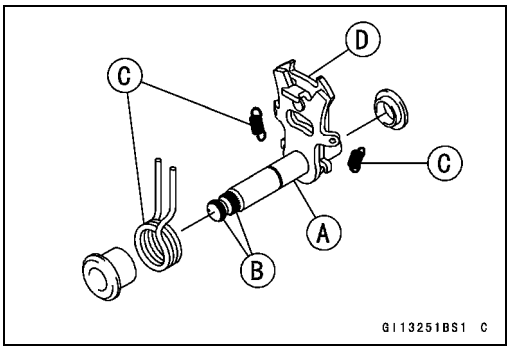

- Inspect the shift shaft [A] for any damage.

★If the shaft is bent, straighten or replace it.
★If the serration [B] are damaged, replace the shaft.
★If the springs [C] are damaged in any way, replace them.
★If the shift mechanism arm [D] is damaged in any way, replace the shaft.

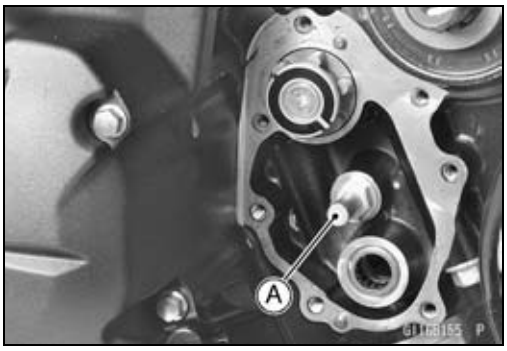

- Check the return spring pin [A] is not loose.

★If it is loose, unscrew it, apply a non-permanent locking agent to the threads, and tighten it.

Torque - Shift Shaft Return Spring Pin: 29 N·m (3.0 kgf·m, 21 ft·lb)

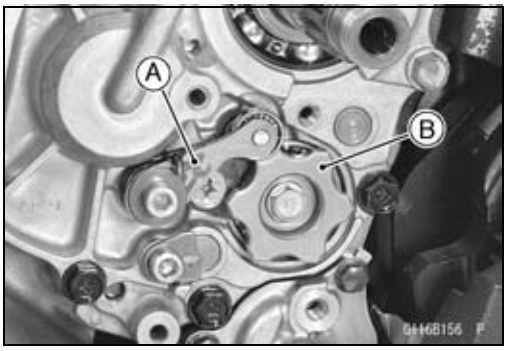

- Check the gear positioning lever [A] and its spring for breaks or distortion.

★If the lever or spring are damaged in any way, replace them.

- Visually inspect the shift drum cam [B].

★If any of them is badly worn or shows any damage, replace it.

Transmission

Transmission Assy Removal

- Remove:
  Shift Shaft Assembly (see External Shift Mechanism Removal)
  Neutral Switch Holder Screw [A]
  Neutral Switch Holder [B] and Pin
  Shift Drum Holder [C] and Pin

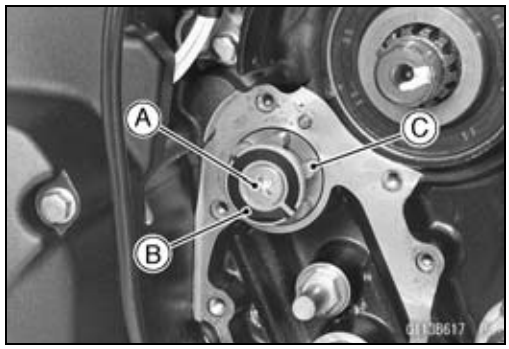

- Remove the collar [A] and the O-ring [B] from the output shaft [C].

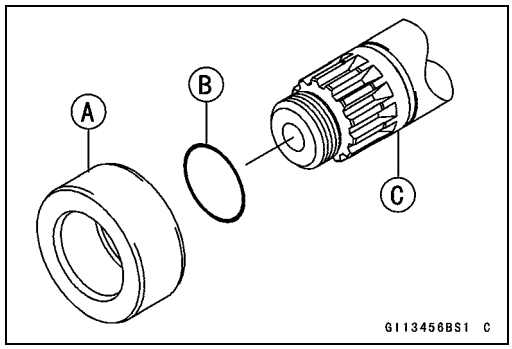

- Remove:
  Clutch (see Clutch Removal in the Clutch chapter)
  Transmission Case Bolts [A]

★If the transmission assy is to be disassembled, remove the following.
  Shift Rod Plate Bolt and Plate [B]
  Gear Positioning Lever [C] (see External Shift Mechanism Removal)

- Pull the transmission assy out of the crankcase.

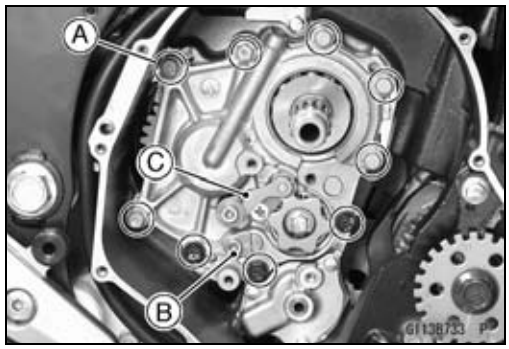

Transmission Assy Installation

- Be sure that the dowel pins [A] are in position.
- Apply grease to the new O-ring [B] on the oil pipe [C].
- Install the transmission assy on the crankcase.
- Tighten:

Torque - Transmission Case Bolts: 20 N·m (2.0 kgf·m, 15 ft·lb)

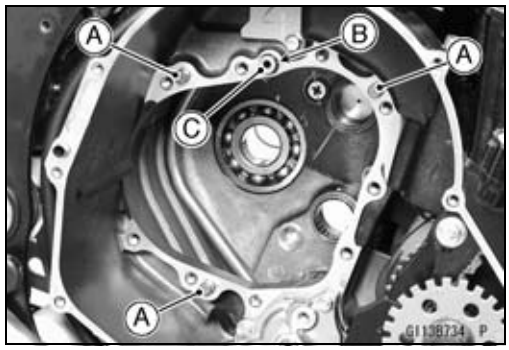

★If the gear positioning lever [A] was removed, install it (see External Shift Mechanism Installation).

★If the shift rod plate [B] was removed, install it in the following procedure.

○Apply a non-permanent locking agent to the shift rod plate bolt [C], and tighten it.

Torque - Shift Rod Plate Bolt: 9.8 N·m (1.0 kgf·m, 87 in·lb)

- Set the gear positioning lever to the neutral position [D].
- Check that the drive and output shaft turn freely.

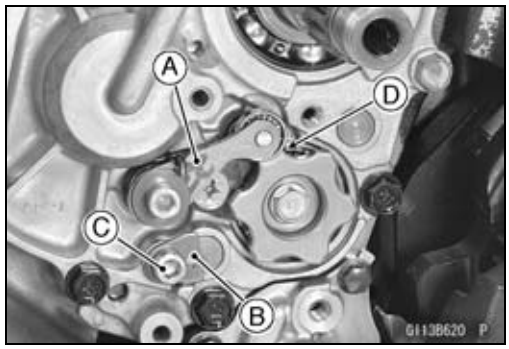

Transmission

- Install:
  Pin [A]
  Shift Drum Holder [B]
  Pin [C]
  Neutral Switch Holder [D]
- Apply a non-permanent locking agent to the neutral switch holder screw [E] and tighten it.

  Torque - Neutral Switch Holder Screw: 4.9 N·m (0.50 kgf·m, 43 in·lb)

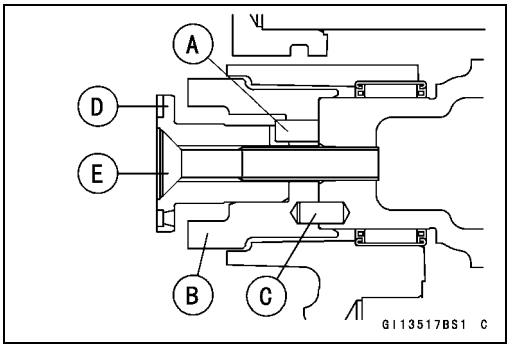

- Apply grease to the new O-ring [A], and install it on the output shaft.
- Apply grease to the oil seal lips.
- Install the collar [B] to the output shaft.
- When the new oil seal [C] is installed, press in it onto the collar so that the surface of the oil seal is flush with the surface [D] of the crankcase.

○Using a cleaning fluid, clean off any oil or dirt on the outer circumference [E] of the oil seal and its mounting surface of the crankcase.

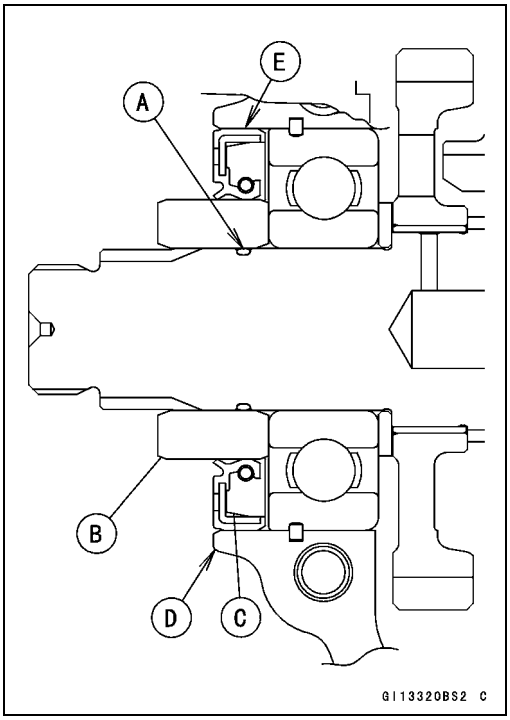

Transmission Assy Disassembly

- Remove the transmission assy (see Transmission Assy Removal).
- Remove the following from the transmission case [A].
  Shift Rods [B]
  Shift Forks [C]
  Drive Shaft [D]
  Output Shaft [E]

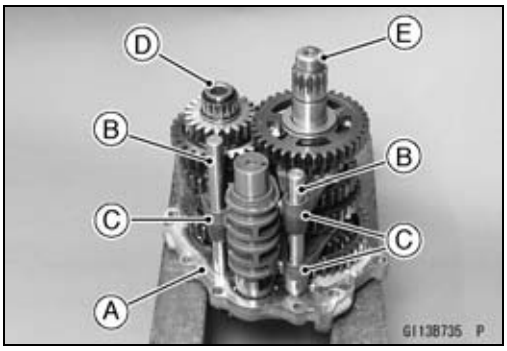

- Remove:
  Shift Drum Cam Bolt [A]
  Shift Drum [B] and Pin
  Shift Drum [C]

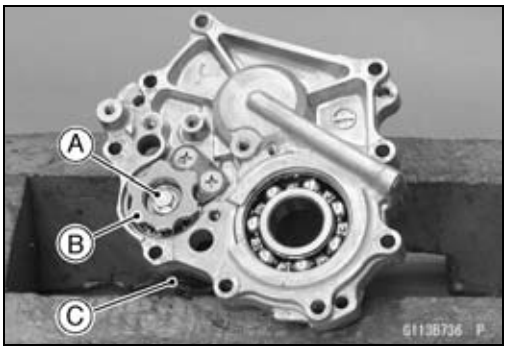

Transmission

- Remove the following from the transmission case as necessary.
  Shift Drum Bearing Holder Screws [A]
  Shift Drum Bearing Holder [B]

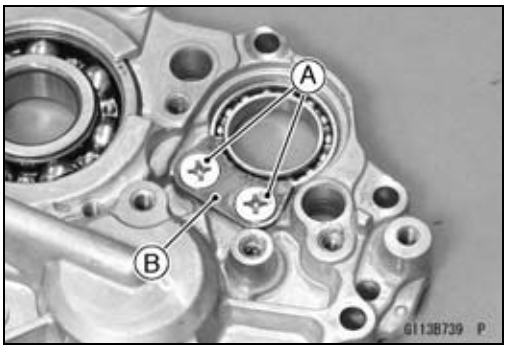

- Remove the following from the transmission case as necessary.
  Drive Shaft Bearing Holder Screw [A]
  Drive Shaft Bearing Holder [B]

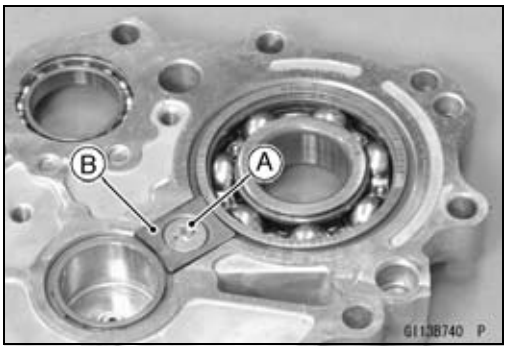

Transmission Assy Assembly

- When the new ball bearing [A] and new race [B] are installed in the transmission case [C], press and insert them until they are bottomed.

  Special Tool - Bearing Driver Set: 57001-1129

NOTE

○*Install the new ball bearing and new race so that the stepped side [D] faces inside of the transmission case.*

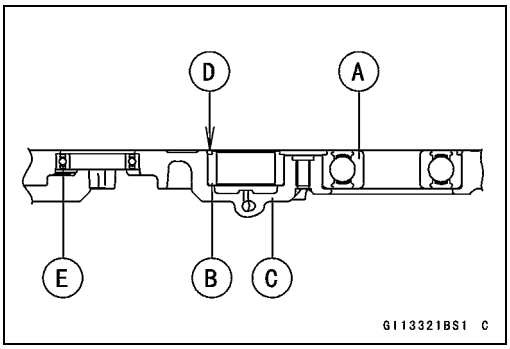

- When the ball bearing [E] for shift drum is installed in the transmission case, insert the ball bearing until it is bottomed.

★If the shift drum bearing holder [A] is to be removed, follow the next procedure.

○Apply a non-permanent locking agent to the threads of the shift drum bearing holder screws [B] and tighten them.

Torque - Shift Drum Bearing Holder Screws: 4.9 N·m (0.50 kgf·m, 43 in·lb)

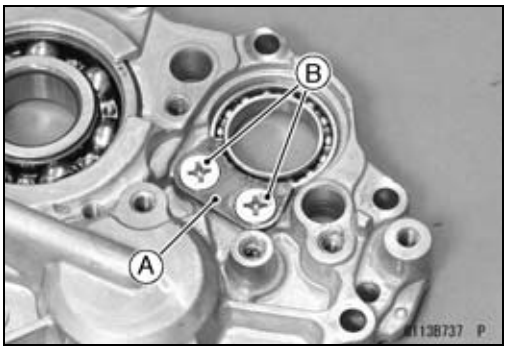

Transmission

★If the drive shaft bearing holder [A] is to be removed, follow the next procedure.

○Apply a non-permanent locking agent to the threads of the drive shaft bearing holder screw [B] and tighten it.

Torque - Drive Shaft Bearing Holder Screw: 4.9 N·m (0.50 kgf·m, 43 in·lb)

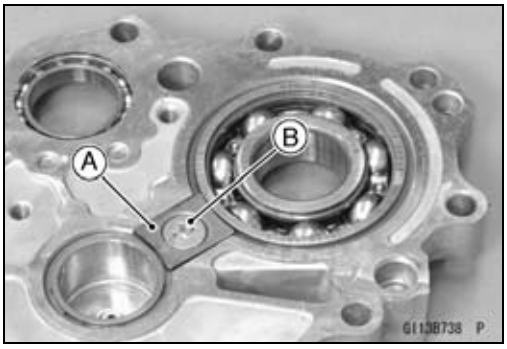

Transmission

- Apply engine oil to the shift drum groove.
- Install the following on the transmission case [A].
  Shift Drum [B]
  Pin [C]
  Shift Drum Cam [D]

○Align the pin with the hole on the shift drum cam.

- Apply a non-permanent locking agent to the shift drum cam bolt [E] and tighten it.

Torque - Shift Drum Cam Bolt: 12 N·m (1.2 kgf·m, 106 in·lb)

- Set the shift drum to the neutral position.
- Install the following as a set.
  Drive Shaft [F]
  Output Shaft [G]
- Apply engine oil to the shift fork ears.
- Install the shift forks as shown in the figure.

○Position the one [H] with shortest ears on the drive shaft and place the pin in the center groove in the shift drum.

○The two shift forks [J] on the output shaft are identical.

- Apply engine oil to the shift rods.
- Install the shift rods.

○The rod [K] length of the output shaft side is shorter than the rod [L] length of the drive shaft side.

- Apply molybdenum disulfide oil solution to the transmission gears shown with X marks [M].
- Be sure that the spacer [N] is on the output shaft.
- Install the transmission assy (see Transmission Assy Installation).

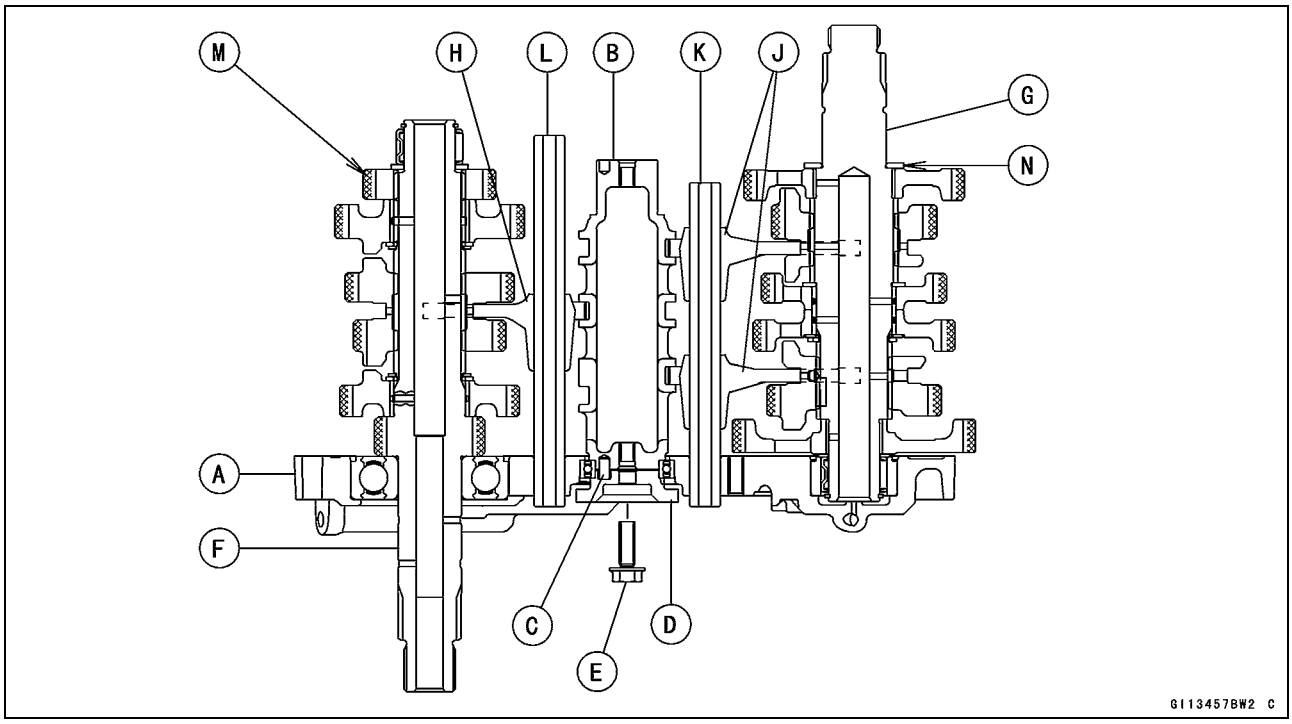

Transmission Shaft Removal

- Refer to the Transmission Assy Disassembly.

Transmission Shaft Installation

- Refer to the Transmission Assy Assembly.

Transmission

Transmission Shaft Disassembly

- Remove the transmission shafts (see Transmission Assy Disassembly).
- Remove the circlips, disassemble the transmission shafts.

Special Tool - Outside Circlip Pliers: 57001-144

- The 5th gear [A] on the output shaft has three steel balls assembled into it for the positive neutral finder mechanism. Remove the 5th gear.

○Set the output shaft in a vertical position holding the 3rd gear [B].

○Spin the 5th gear quickly [C] and pull it off upward.

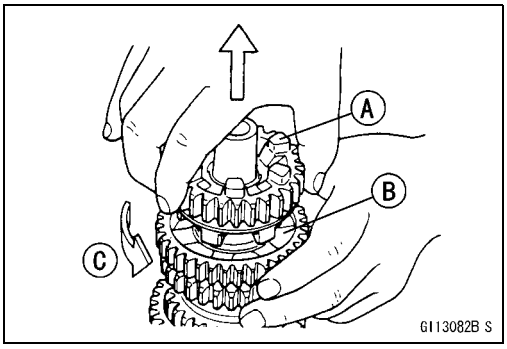

Transmission Shaft Assembly

- Apply engine oil to the bushings, needle bearings and shafts.
- Install the gear bushings [A] on the shaft with their holes [B] aligned.

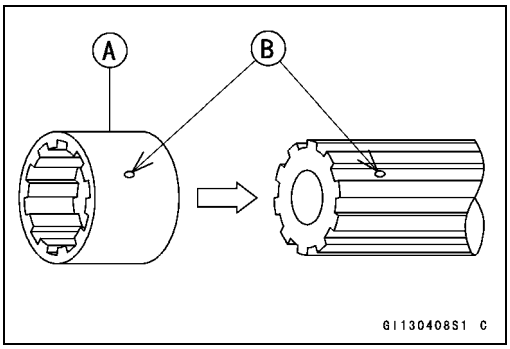

- Replace any circlips removed with new ones.
- Install the circlips [A] so that the opening [B] is aligned with a spline groove [C].

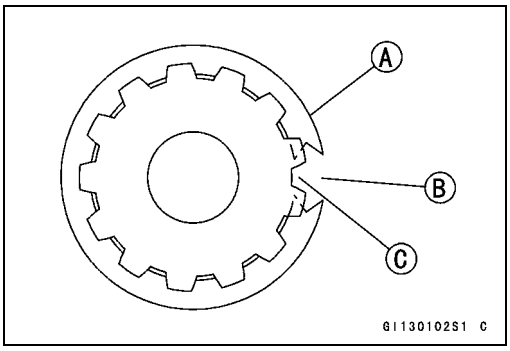

- The drive shaft gears can be recognized by size: the gear with the smallest diameter is 1st gear, and the largest one is 6th gear. Be sure that all parts are put back in the correct sequence and all circlips and washers are properly in place.
- Install the 3rd/4th gear onto the drive shaft with their oil holes aligned.
- Install the 6th gear bushing onto the drive shaft with their oil holes aligned.
- The output shaft gears can be recognized by size: the gear with the largest diameter is 1st gear, and the smallest one is 6th gear. Be sure that all parts are put back in the correct sequence and all circlips and washers are properly in place.
- Install the 5th and 6th gears onto the output shaft with their oil holes aligned.
- Install the 3rd/4th gear bushings onto the output shaft with their oil holes aligned.

Transmission

- Fit the steel balls into the 5th gear holes in the output shaft, aligning oil hole as shown in the figure.
  5th Gear [A]
  Output Shaft [B]
  Steel Balls [C]
  Oil Holes [D]

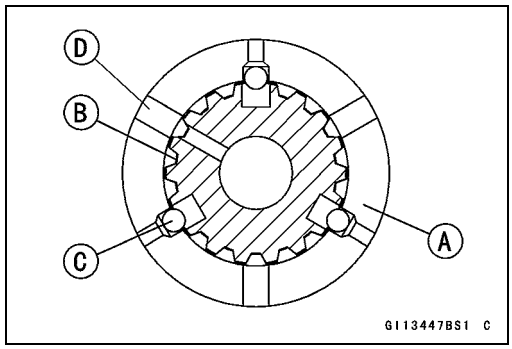

NOTICE

Do not apply grease to the balls to hold them in place. This will cause the positive neutral finder mechanism to malfunction.

○After assembling the 5th gear with steel balls in place on the output shaft, check the ball-locking effect that the 5th gear doesn't come out of the output shaft when moving it up and down by hand.

- Check that each gear spins or slides freely on the transmission shafts without binding after assembly.

Transmission

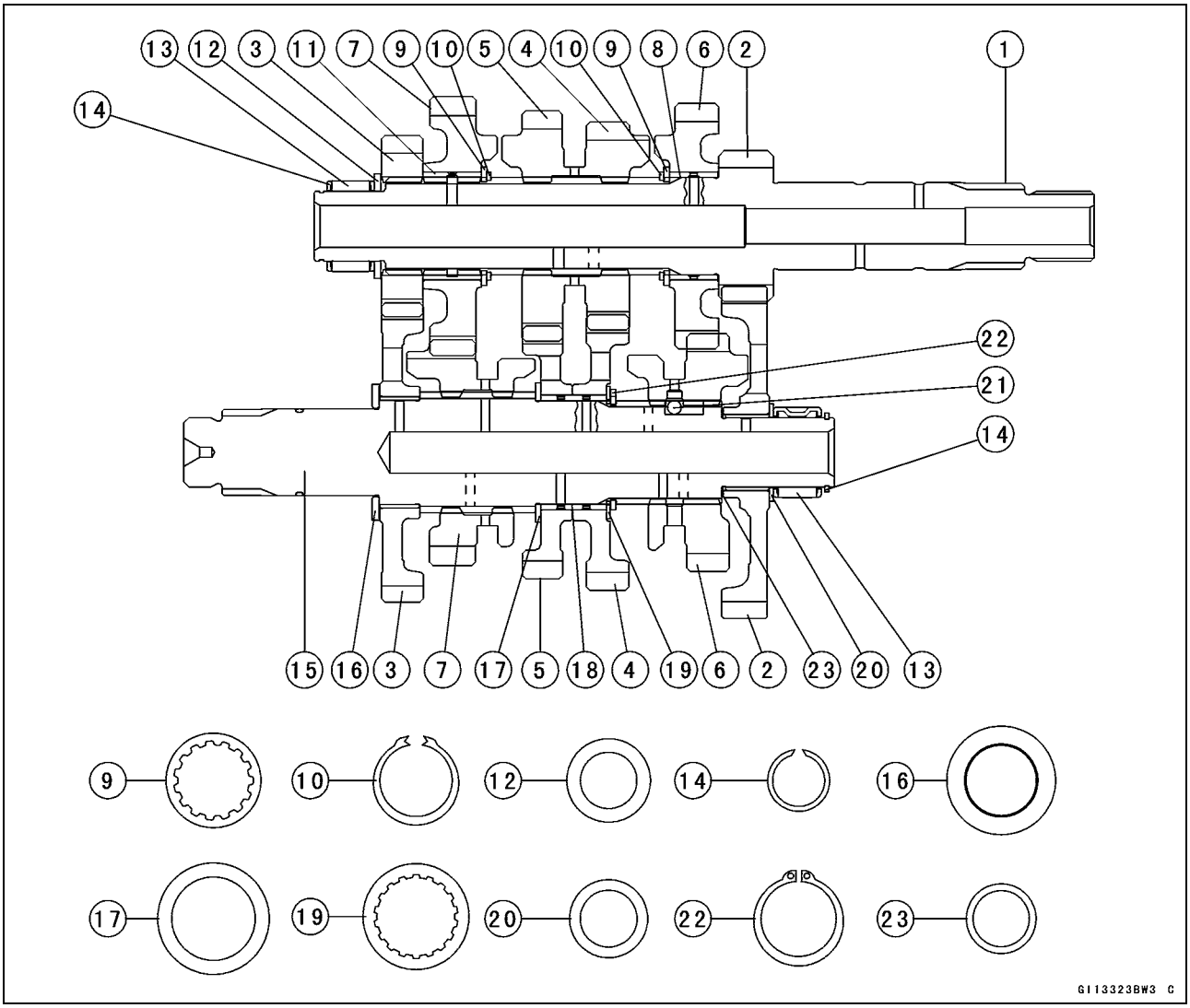

1. Drive Shaft
2. 1st Gear
3. 2nd Gear
4. 3rd Gear
5. 4th Gear
6. 5th Gear
7. 6th (Top) Gear
8. Bushing
9. Toothed Washer, ϕ34 mm (1.34 in.)
10. Circlip
11. Bushing
12. Thrust Washer, ϕ30 mm (1.18 in.)
13. Needle Bearing
14. Circlip
15. Output Shaft
16. Spacer, ϕ39 mm (1.54 in.)
17. Washer, ϕ40 mm (1.57 in.)
18. Bushing
19. Toothed Washer, ϕ38 mm (1.50 in.)
20. Shim, ϕ28 mm (1.10 in.)
21. Steel Ball
22. Circlip, ϕ32.2 mm (1.268 in.)
23. Thrust Washer, ϕ25 mm (0.98 in.)

Transmission

Shift Drum and Fork Removal
- Refer to the Transmission Assy Disassembly.

Shift Drum and Fork Installation
- Refer to the Transmission Assy Assembly.

Shift Drum Disassembly
- Refer to the Transmission Assy Disassembly.

Shift Drum Assembly
- Refer to the Transmission Assy Assembly.

Shift Fork Bending Inspection
- Visually inspect the shift forks, and replace any fork that is bent. A bent fork could cause difficulty in shifting, or allow the transmission to jump out of gear when under power.
  90° [A]

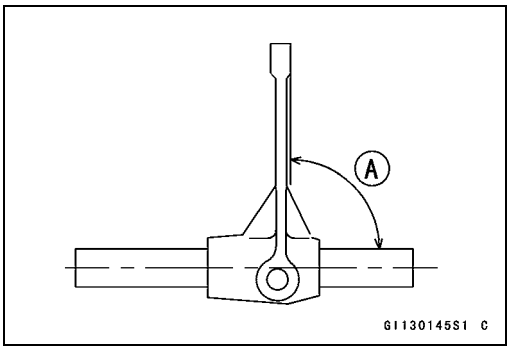

Shift Fork/Gear Groove Wear Inspection
- Measure the thickness [A] of the shift fork ears, and measure the width [B] of the gear grooves.

★If the thickness of a shift fork ear is less than the service limit, replace it with a new one.

Shift Fork Ear Thickness
Standard: 5.9 ~ 6.0 mm (0.232 ~ 0.236 in.)
Service Limit: 5.8 mm (0.23 in.)

★If the gear groove is worn over the service limit, replace it with a new one.

Gear Groove Width
Standard: 6.05 ~ 6.16 mm (0.238 ~ 0.243 in.)
Service Limit: 6.3 mm (0.25 in.)

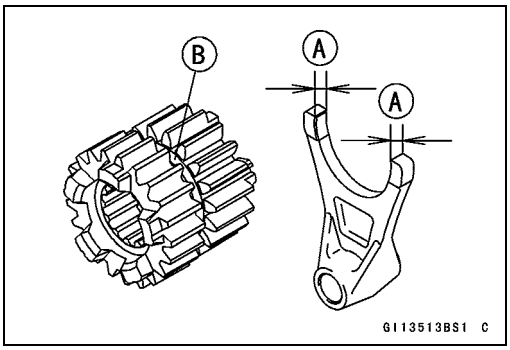

Shift Fork Guide Pin/Drum Groove Wear Inspection
- Measure the diameter [A] of each shift fork guide pin, and measure the width [B] of each shift drum groove.

★If the guide pin on any shift fork is less than the service limit, replace it with a new one.

Shift Fork Guide Pin Diameter
Standard: 6.9 ~ 7.0 mm (0.272 ~ 0.276 in.)
Service Limit: 6.8 mm (0.27 in.)

★If any shift drum groove is worn over the service limit, replace it with a new one.

Shift Drum Groove Width
Standard: 7.05 ~ 7.20 mm (0.278 ~ 0.283 in.)
Service Limit: 7.3 mm (0.29 in.)

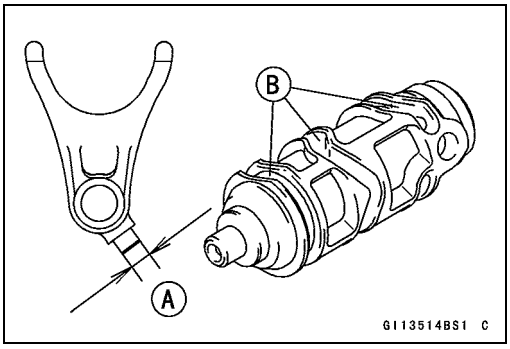

Transmission

Gear Dog and Gear Dog Hole Damage Inspection

● Visually inspect the gear dogs [A] and gear dog holes [B].

★Replace any damaged gears or gears with excessively worn dogs or dog holes.

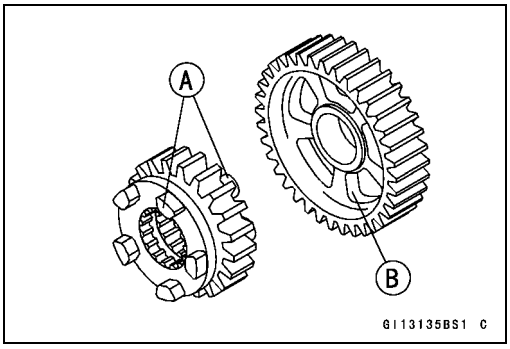

Ball Bearing, Needle Bearing, and Oil Seal

Ball and Needle Bearing Replacement

NOTICE

Do not remove the ball or needle bearings unless it is necessary. Removal may damage them.

● Using a press or puller, remove the ball bearing and/or needle bearings.

NOTE

○*In the absence of the above mentioned tools, satisfactory results may be obtained by heating the case to approximately 93°C (200°F) max., and tapping the bearing in or out.*

NOTICE

Do not heat the case with a torch. This will warp the case. Soak the case in oil and heat the oil.

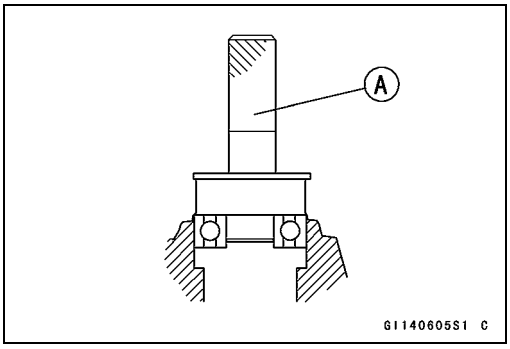

● Using a press and the bearing driver set [A], install the new ball bearing until it stops at the bottom of its housing.

○The new needle bearings must be pressed into the crankcase so that the end is flush with the end of the hole.

Special Tool - Bearing Driver Set: 57001-1129

Ball and Needle Bearing Wear Inspection

NOTICE

Do not remove the bearings for inspection. Removal may damage them.

● Check the ball bearings.

○Since the ball bearings are made to extremely close tolerances, the wear must be judged by feel rather than measurement. Clean each bearing in a high flash-point solvent, dry it (do not spin the bearing while it is dry), and oil it with engine oil.

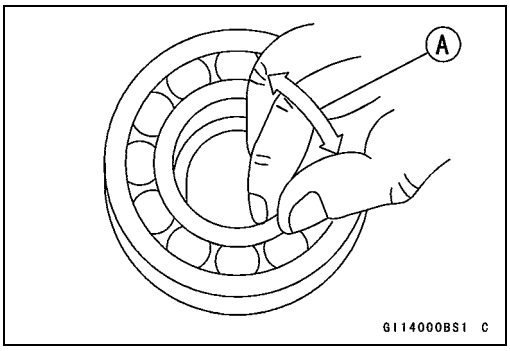

○Spin [A] the bearing by hand to check its condition.

★If the bearing is noisy, does not spin smoothly, or has any rough spots, replace it.

● Check the needle bearings.

○The rollers in a needle bearing normally wear very little, and wear is difficult to measure. Instead of measuring, inspect the bearing for abrasion, color change, or other damage.

★If there is any doubt as to the condition of a needle bearing, replace it.

Oil Seal Inspection

● Inspect the oil seals.

★Replace it if the lips are misshapen, discolored (indicating that the rubber has deteriorated), hardened or otherwise damaged.

Wheels/Tires

Table of Contents

Exploded View 10-2
Specifications 10-4
Special Tools 10-5
Wheels (Rims) 10-6
- Front Wheel Removal 10-6
- Front Wheel Installation 10-6
- Rear Wheel Removal 10-7
- Rear Wheel Installation 10-8
- Wheel Inspection 10-10
- Axle Inspection 10-10
- Balance Inspection 10-11
- Balance Adjustment 10-11
- Balance Weight Removal 10-11
- Balance Weight Installation 10-11

Tires 10-13
- Air Pressure Inspection/Adjustment 10-13
- Tire Inspection 10-13
- Tire Removal 10-13
- Tire Installation 10-13
- Tire Repair 10-15

Hub Bearing 10-16
- Hub Bearing Removal 10-16
- Hub Bearing Installation 10-16
- Hub Bearing Inspection 10-16
- Hub Bearing Lubrication 10-17

Exploded View

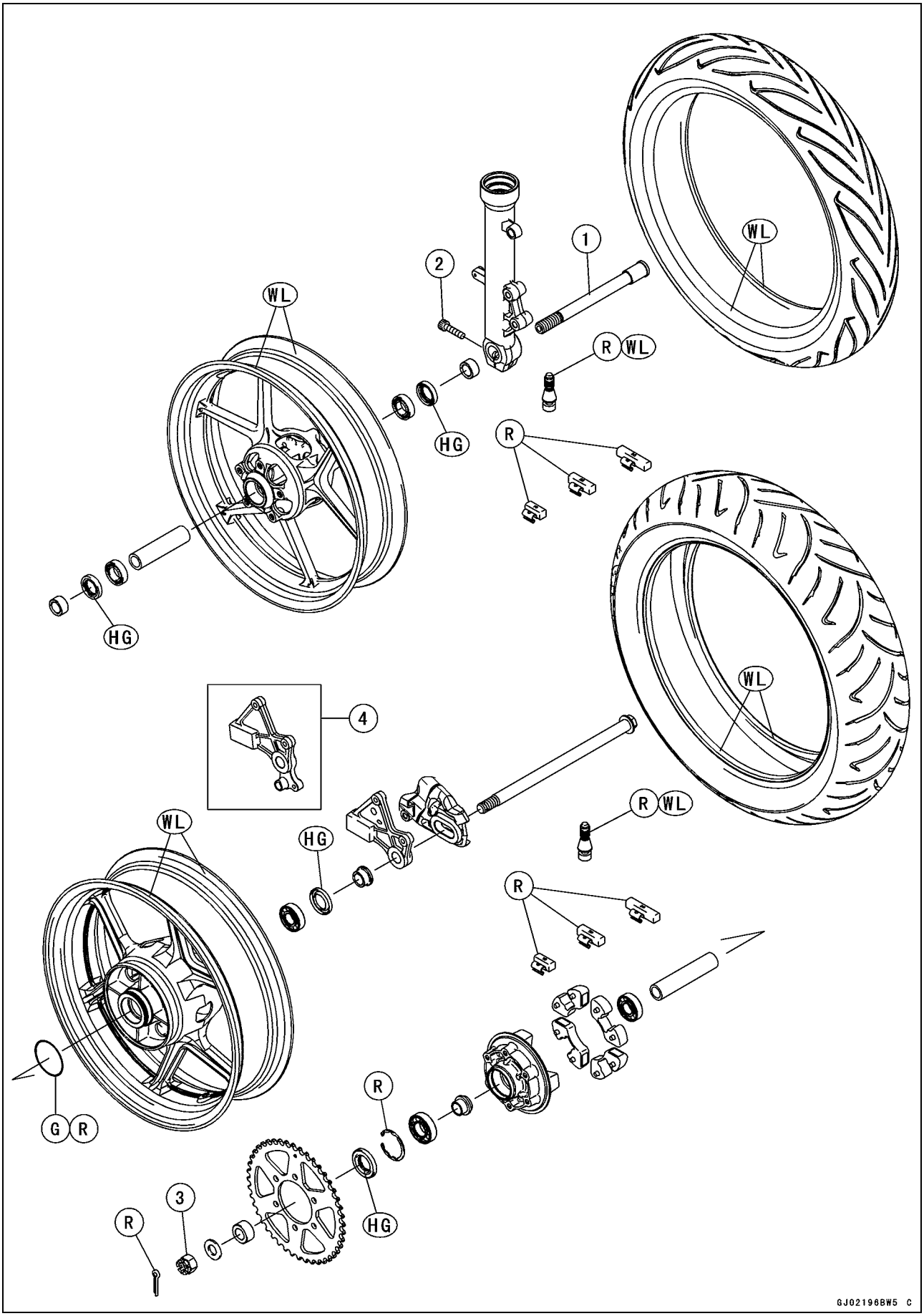

Exploded View

No.	Fastener	Torque			Remarks
		N·m	kgf·m	ft·lb	
1	Front Axle	108	11.0	80	
2	Front Axle Clamp Bolt	34	3.5	25	
3	Rear Axle Nut	108	11.0	80	

4. EX650F Model
G: Apply grease.
HG: Apply high-temperature grease.
R: Replacement Parts
WL: Apply soap and water solution or rubber lubricant.

Specifications

Item	Standard	Service Limit
Wheels (Rims)		
Rim Runout:		
Axial	TIR 0.5 mm (0.02 in.) or less	TIR 1.0 mm (0.04 in.)
Radial	TIR 0.8 mm (0.03 in.) or less	TIR 1.0 mm (0.04 in.)
Axle Runout/100 mm (3.94 in.)	TIR 0.03 mm (0.001 in.) or less	TIR 0.2 mm (0.008 in.)
Wheel Balance	10 g (0.35 oz.) or less	– – –
Balance Weights	10 g (0.35 oz.) 20 g (0.71 oz.) 30 g (1.06 oz.)	– – –
Rim Size:		
Front	J17M/C × MT3.50	– – –
Rear	J17M/C × MT4.50	– – –
Tires		
Air Pressure (when Cold):		
Front	Up to 200 kg (441 lb) load: 225 kPa (2.25 kgf/cm², 32 psi)	– – –
Rear	Up to 200 kg (441 lb) load: 250 kPa (2.50 kgf/cm², 36 psi)	– – –
Tread Depth:		
Front	4.5 mm (0.18 in.)	1 mm (0.04 in.) (AT, CH, DE) 1.6 mm (0.06 in.)
Rear	6.4 mm (0.25 in.)	Up to 130 km/h (80 mph): 2 mm (0.08 in.) Over 130 km/h (80 mph): 3 mm (0.12 in.)
Standard Tires:	Make, Type	Size
Front	DUNLOP, ROADSMART II J	120/70 ZR17 M/C (58 W)
Rear	DUNLOP, ROADSMART II J	160/60 ZR17 M/C (69 W)

⚠ WARNING

Some replacement tires may adversely affect handling and cause an accident resulting in serious injury or death. To ensure proper handling and stability, use only the recommended standard tires for replacement, inflated to the standard pressure.

Special Tools

Bearing Driver Set:
57001-1129

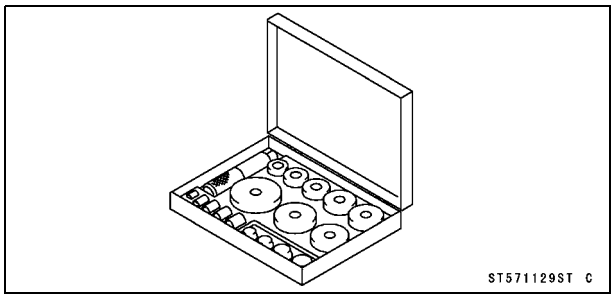

Jack:
57001-1238

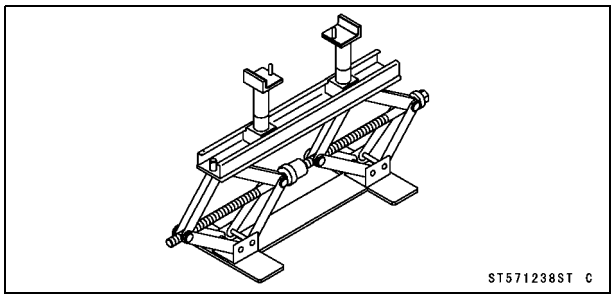

Bearing Remover Head, ϕ20 × ϕ22:
57001-1293

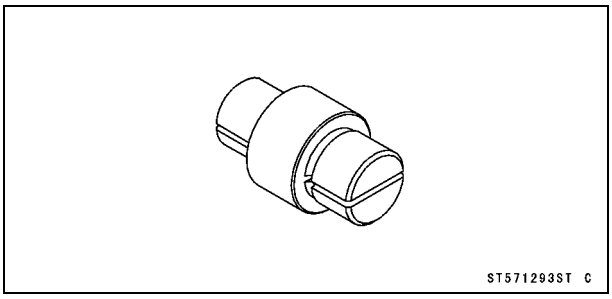

Bearing Remover Shaft, ϕ13:
57001-1377

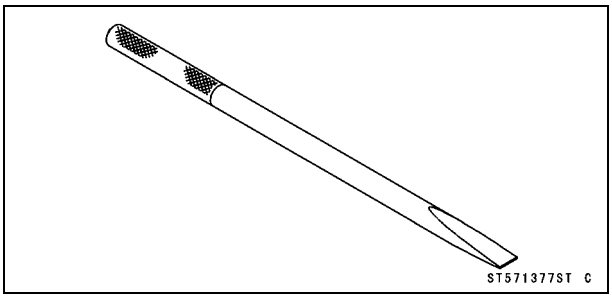

Wheels (Rims)

Front Wheel Removal

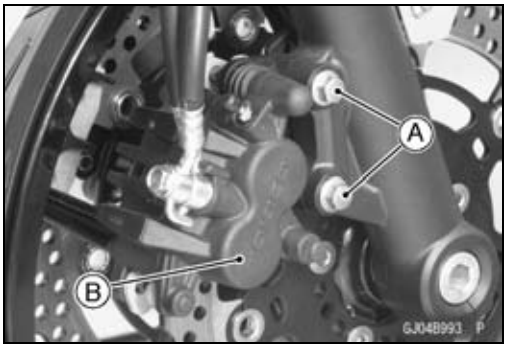

- Remove:
  Front Caliper Mounting Bolts [A] (Both Sides)
  Front Calipers [B] (Both Sides)

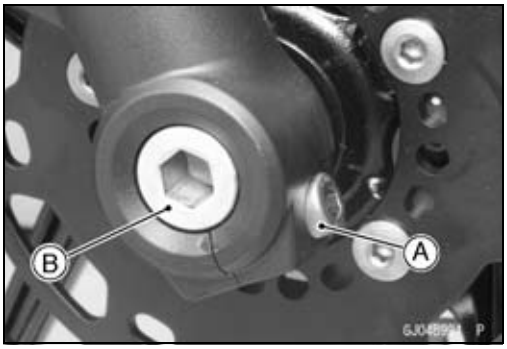

- Loosen:
  Front Axle Clamp Bolt [A]
  Front Axle [B]

- Remove:
  Middle Fairings (see Middle Fairing Removal in the Frame chapter)
  Lower Fairing Brackets (see Lower Fairing Bracket Removal in the Frame chapter)
- Raise the front wheel off the ground.

  Special Tool - Jack: 57001-1238
- Pull out the front axle to the right side and drop the front wheel out of the front forks.

NOTICE

Do not lay the wheel down on one of the discs. This can damage or warp the disc. Place blocks under the wheel so that the disc does not touch the ground.

Front Wheel Installation

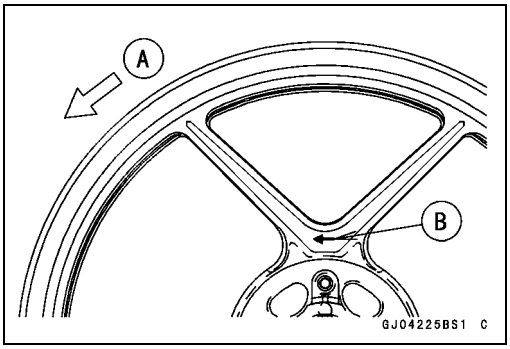

NOTE

○*The direction of the wheel rotation [A] is shown by an arrow [B] on the wheel spoke.*

- Check the wheel rotation mark on the front wheel and install it.

Wheels (Rims)

- Apply high-temperature grease to the grease seal lips.
- Fit the collars [A] on the both sides of the hub.

○The collars are identical.

- Insert the front axle.
- Remove the jack.
- Tighten:

Torque - Front Axle: 108 N·m (11.0 kgf·m, 80 ft·lb)

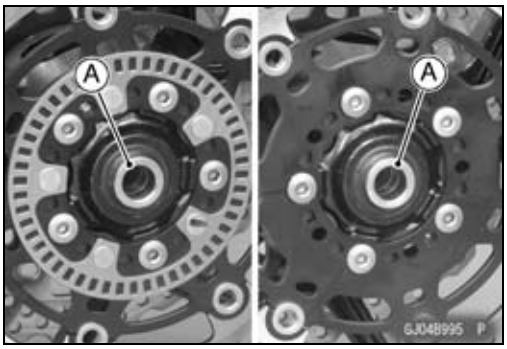

- Before tightening the front axle clamp bolt [A] on the right front fork leg, pump the front fork up and down 4 or 5 times to allow the right front fork leg to seat on the front axle.

NOTE

○*Put a block in front of the front wheel to stop moving.*

- Tighten:

Torque - Front Axle Clamp Bolt: 34 N·m (3.5 kgf·m, 25 ft·lb)

- Install the front calipers (see Front Caliper Installation in the Brakes chapter).
- Check the front brake effectiveness (see Brake Operation Inspection in the Periodic Maintenance chapter).

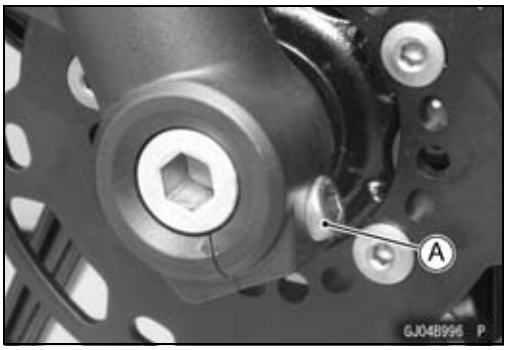

⚠ WARNING

After servicing, it takes several applications of the brake lever before the brake pads contact the disc, which could result in increased stopping distance and cause an accident resulting in injury or death. Do not attempt to ride the motorcycle until a firm brake lever is obtained by pumping the lever until the pads are against the disc.

Rear Wheel Removal

- Raise the rear wheel off the ground using the stand [A].

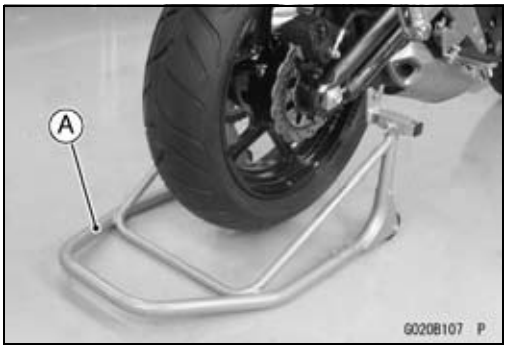

- For models equipped with an ABS, remove the rear wheel rotation sensor from the caliper bracket (see Rear Wheel Rotation Sensor Removal in the Brakes chapter).
- Remove:

  Rear Caliper Mounting Bolts [A]
  Rear Caliper [B]

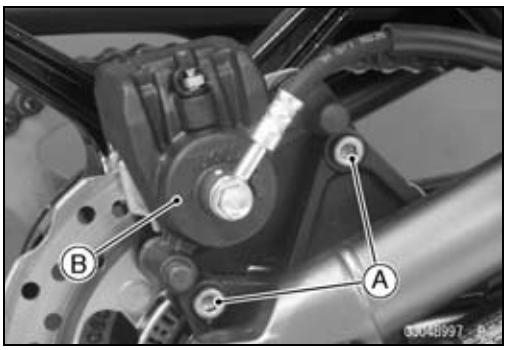

Wheels (Rims)

- Remove:
  Cotter Pin [A]
  Rear Axle Nut [B]
  Washer [C]
  Rear Axle [D] (from Right Side)

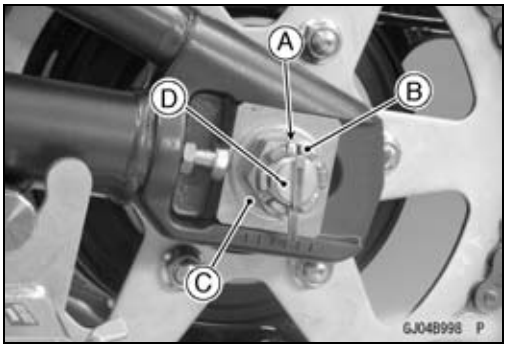

- Remove the drive chain [A] from the rear sprocket toward the left.
- Move the rear wheel back and remove it.

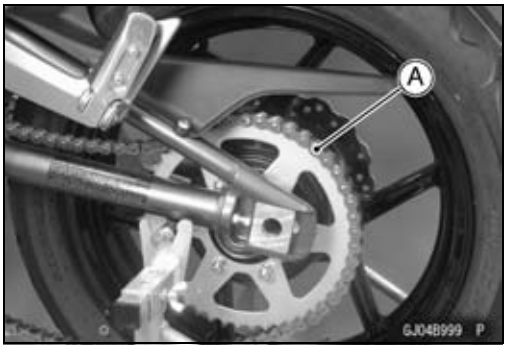

NOTICE

Do not lay the wheel on the ground with the disc facing down. This can damage or warp the disc. Place wooden blocks under the wheel so that the disc does not touch the ground.

Rear Wheel Installation

- Apply high-temperature grease to the grease seal lips.
- Fit the collars on the both sides of the hub.
  Left Side Collar [A]
  Right Side Collar [B] (with Flange)

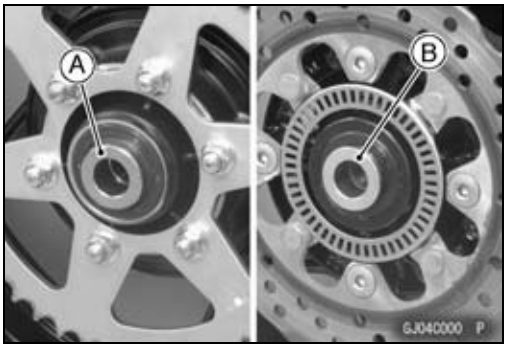

- Engage the drive chain with the rear sprocket.
- Install the caliper bracket [A] onto the stopper [B] of the swingarm.
- Insert the rear axle from the right side of the wheel.
- Install the washer and rear axle nut.
- Adjust the drive chain slack before tightening the rear axle nut (see Drive Chain Slack Inspection in the Periodic Maintenance chapter).
- Tighten:

  Torque - Rear Axle Nut: 108 N·m (11.0 kgf·m, 80 ft·lb)

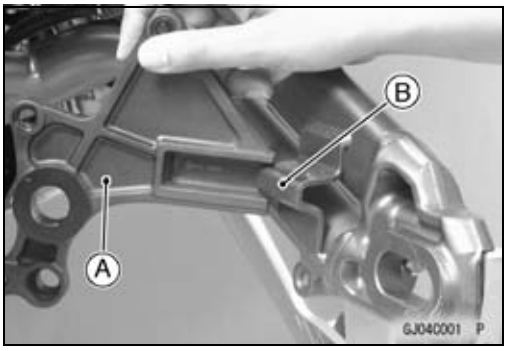

- Insert a new cotter pin [A].

NOTE

○*When inserting the cotter pin, if the slots in the nut do not align with the cotter pin hole in the axle, tighten the nut clockwise [B] up to next alignment.*
○*It should be within 30 degrees.*
○*Loosen once and tighten again when the slot goes past the nearest hole.*

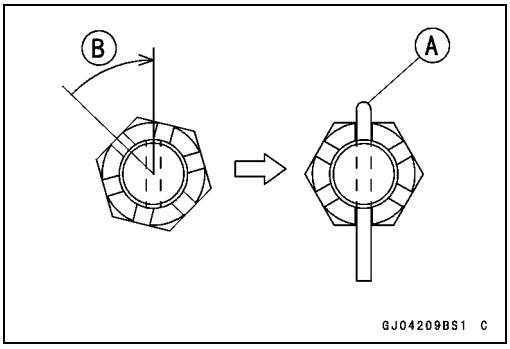

Wheels (Rims)

- Bend the cotter pin [A] over the nut [B].

⚠ WARNING

A loose axle nut can lead to an accident resulting in serious injury or death. Tighten the axle nut to the proper torque and install a new cotter pin.

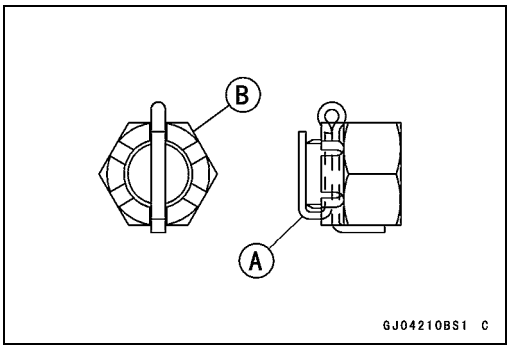

- Install the rear caliper (see Rear Caliper Installation in the Brakes chapter).
- For models equipped with an ABS, install the rear wheel rotation sensor (see Rear Wheel Rotation Sensor Installation in the Brakes chapter).
- Check the rear brake effectiveness (see Brake Operation Inspection in the Periodic Maintenance chapter).

⚠ WARNING

After servicing, it takes several applications of the brake pedal before the brake pads contact the disc, which could result in increased stopping distance and cause an accident resulting in injury or death. Do not attempt to ride the motorcycle until a firm brake pedal is obtained by pumping the pedal until the pads are against the disc.

Wheels (Rims)

Wheel Inspection

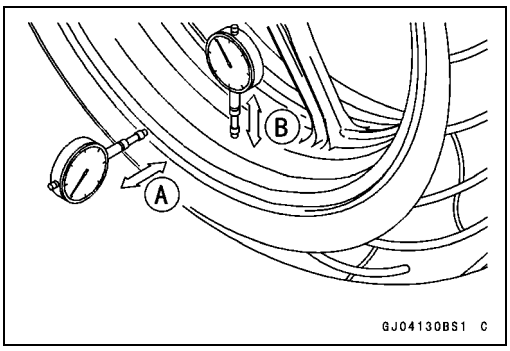

- Raise the front/rear wheel off the ground.

  Special Tool - Jack: 57001-1238

- Spin the wheel lightly, and check for roughness or binding.

★If roughness or binding is found, replace the hub bearings (see Hub Bearing Removal/Installation).

- Inspect the wheel for small cracks, dents, bending, or warp.

★If there is any damage to the wheel, replace the wheel.

- Remove the wheel, and support it with the tire by the axle.
- Measure the rim runout, axial [A] and radial [B], with a dial gauge.

★If rim runout exceeds the service limit, check the hub bearings (see Hub Bearing Inspection).

★If the problem is not due to the bearings, replace the wheel.

Rim Runout (with tire installed)

Standard:

Axial	**TIR 0.5 mm (0.02 in.) or less**
Radial	**TIR 0.8 mm (0.03 in.) or less**

Service Limit:

Axial	**TIR 1.0 mm (0.04 in.)**
Radial	**TIR 1.0 mm (0.04 in.)**

⚠ WARNING

Damaged wheel parts may fail and cause an accident resulting in serious injury or death. Never attempt to repair a damaged wheel part. If the wheel part is damaged, it must be replaced with a new one.

Axle Inspection

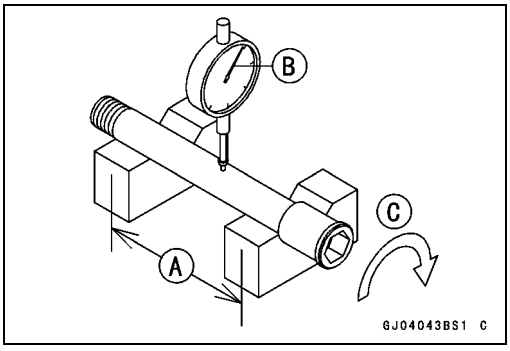

- Remove the front and rear axles (see Front/Rear Wheel Removal).
- Visually inspect the front and rear axles for damages.

★If the axle is damaged or bent, replace it.

- Measure the axle runout.

○Place the axle in V blocks that are 100 mm (3.94 in.) [A] apart.

○Set a dial gauge [B] on the axle at a point halfway between the blocks.

○Turn [C] the axle.

○The difference between the highest and lowest dial readings is the amount of runout.

★If axle runout exceeds the service limit, replace the axle.

Axle Runout/100 mm (3.94 in.)

Standard:	**TIR 0.03 mm (0.001 in.) or less**
Service Limit:	**TIR 0.2 mm (0.008 in.)**

Wheels (Rims)

Balance Inspection

- Remove the front and rear wheels (see Front/Rear Wheel Removal).
- Support the wheel so that it can be spun freely.
- Spin the wheel lightly, and mark [A] the wheel at the top when the wheel stops.

○Repeat this procedure several times. If the wheel stops of its own accord in various positions, it is well balanced.

★If the wheel always stops in one position, adjust the wheel balance (see Balance Adjustment).

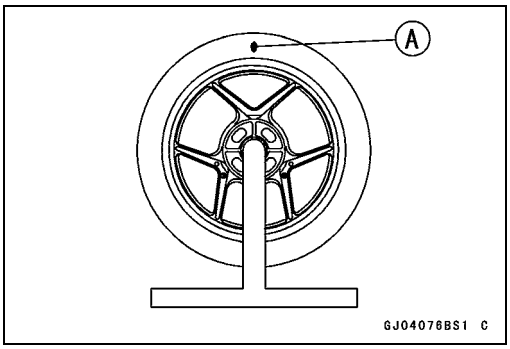

Balance Adjustment

- If the wheel always stops in one position, provisionally attach a balance weight [A] on the rim at the marking using adhesive tape.
- Rotate the wheel 1/4 turn [B], and see whether or not the wheel stops in this position. If it does, the correct balance weight is being used.

★If the wheel rotates and the weight goes up, replace the weight with the next heavier size. If the wheel rotates and the weight goes down, replace the weight with the next lighter size. Repeat these steps until the wheel remains at rest after being rotated 1/4 turn.

- Rotate the wheel another 1/4 turn and then another 1/4 turn to see if the wheel is correctly balanced.
- Repeat the entire procedure as many times as necessary to achieve correct wheel balance.
- Permanently install the balance weight.

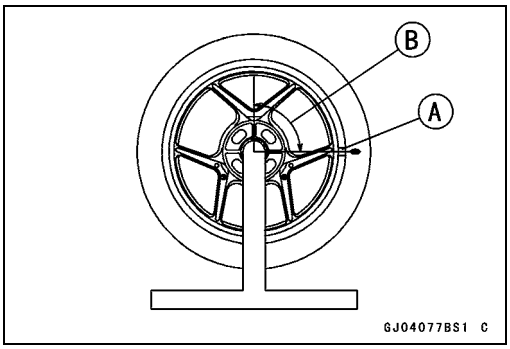

Balance Weight Removal

- Insert a standard tip screwdrivers [A] [B] between the rib [C] and the weight [D] as shown in the figure.
- Pry the balance weight with two screwdrivers and remove the balance weight.
- Discard the used balance weight.

NOTICE

Do not tap the screwdrivers. The rim could be damaged.

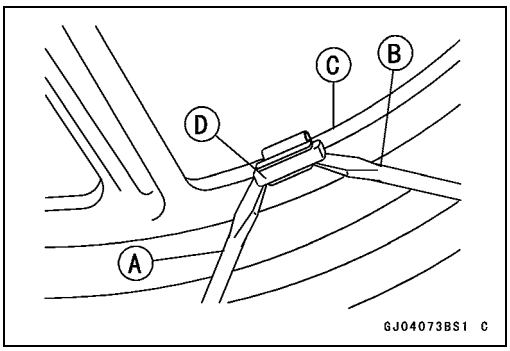

Balance Weight Installation

- Check if the weight portion has any play on the blade [A] and clip [B].

★If it does, discard it.

⚠ WARNING

Unbalanced wheels can create an unsafe riding condition. If the balance weight has any play on the rib of the rim, the blade and/or clip have been stretched. Replace the loose balance weight. Do not reuse used balance weight.

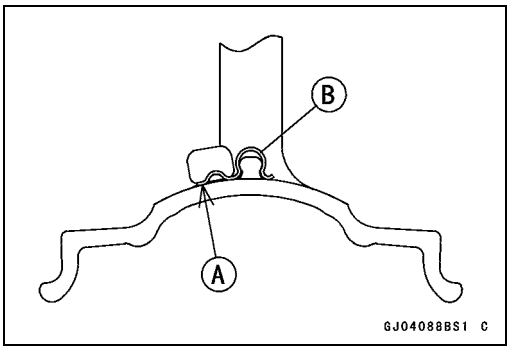

Wheels (Rims)

Balance Weight

Part Number	Weight
41075-0007	10 g (0.35 oz.)
41075-0008	20 g (0.71 oz.)
41075-0009	30 g (1.06 oz.)

NOTE

○*Balance weights are available from Kawasaki dealers in 10, 20 and 30 grams (0.35, 0.71 and 1.06 oz.) sizes. An imbalance of less than 10 grams (0.35 oz.) will not usually affect running stability.*

○*Do not use four or more balance weight (more than 90 gram, 3.2 oz.). If the wheel requires an excess balance weight, disassemble the wheel to find the cause.*

● Slip the balance weight [A] onto the rib [B] by pushing or lightly hammering [C] the clip [D].
Left Side [E]
Right Side [F]

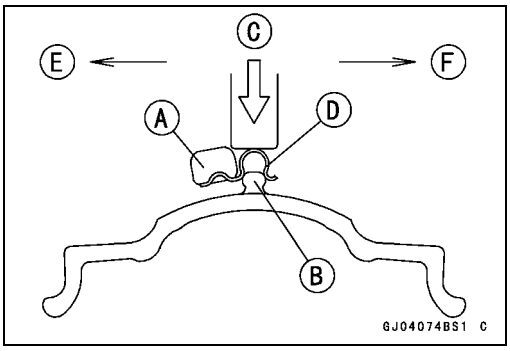

● Be sure to install the balance weight.

○Check that the blade [A] and clip [B] are fully seated on the rim [C] and that the clip is hooked over the rib [D].
Left Side [E]
Right Side [F]

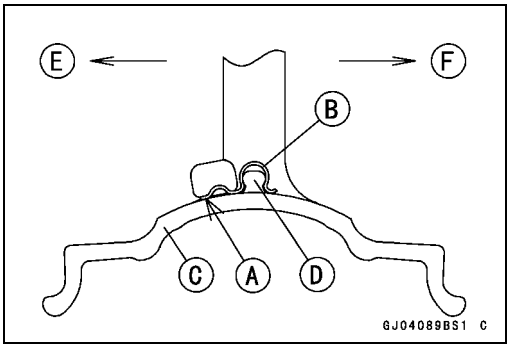

Tires

Air Pressure Inspection/Adjustment

- Refer to the Air Pressure Inspection in the Periodic Maintenance chapter.

Tire Inspection

- Refer to the Wheel/Tire Damage Inspection in the Periodic Maintenance chapter.

Tire Removal

- Remove:
  Wheels (see Front/Rear Wheel Removal)
  Valve Core (Let out the air)
- To maintain wheel balance, mark the valve stem position on the tire with chalk so that the tire can be reinstalled in the same position.
  Chalk Mark or Yellow Mark [A]
  Air Valve [B]
  Align [C]

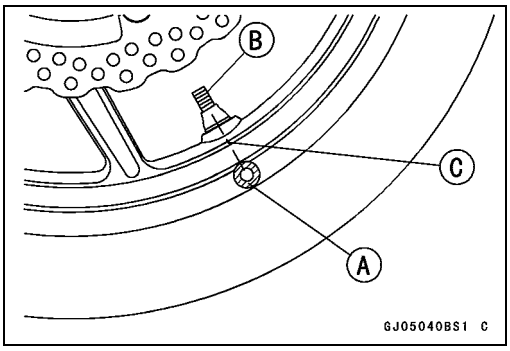

- Lubricate the tire beads and rim flanges on both sides with a soap and water solution or rubber lubricant. This helps the tire beads slip off the rim flanges.

NOTICE

Never lubricate with engine oil or petroleum distillates because they will deteriorate the tire.

- Remove the tire from the rim using a suitable commercially available tire changer.

NOTE

○*The tires cannot be removed with hand tools because they fit the rims too tightly.*

Tire Installation

⚠ WARNING

Some replacement tires may adversely affect handling and cause an accident resulting in serious injury or death. To ensure proper handling and stability, use only the recommended standard tires for replacement, inflated to the standard pressure.

- Inspect the rim and tire, and replace them if necessary.
- Clean the sealing surfaces of the rim and tire, and smooth the sealing surfaces of the rim with a fine emery cloth if necessary.
- Remove the air valve and discard it.

NOTICE

Replace the air valve whenever the tire is replaced. Do not reuse the air valve.

Tires

- Install a new valve in the rim.

○Remove the valve cap, lubricate the stem seal [A] with a soap and water solution or rubber lubricant, and pull [B] the valve stem through the rim from the inside out until it snaps into place.

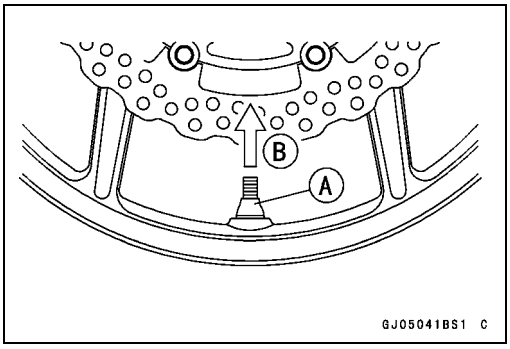

NOTICE

Do not use engine oil or petroleum distillates to lubricate the stem because they will deteriorate the rubber.

○The air valve is shown in the figure.
Valve Cap [A]
Valve Core [B]
Stem Seal [C]
Valve Stem [D]
Valve Seat [E]
Valve Opened [F]

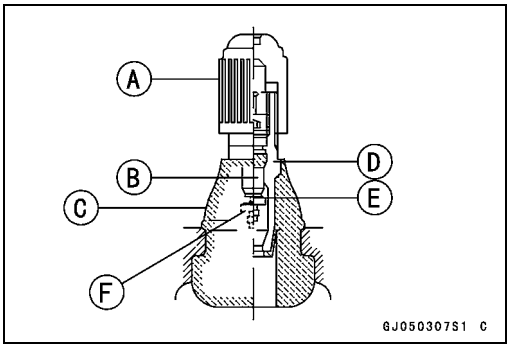

- Check the tire rotation mark on the front and rear tires and install them on the rim accordingly.
  Tire Rotation Mark [A]
  Rotating Direction [B]

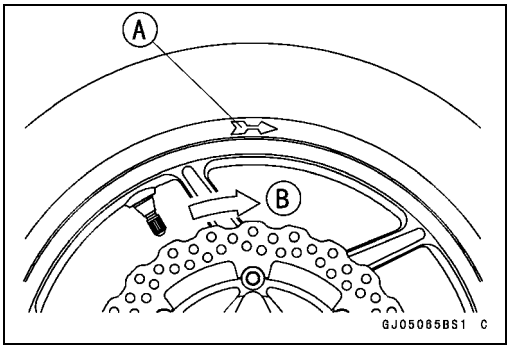

- Position the tire on the rim so that the air valve [A] align with the tire balance mark [B] (the chalk mark made during removal, or the yellow paint mark on a new tire).
- Install the tire bead over the rim flange using a suitable commercially available tire changer.
- Lubricate the tire beads and rim flanges with a soap and water solution or rubber lubricant to help seat the tire beads in the sealing surfaces of the rim while inflating the tire.
- Center the rim in the tire beads, and inflate the tire with compressed air until the tire beads seat in the sealing surfaces.

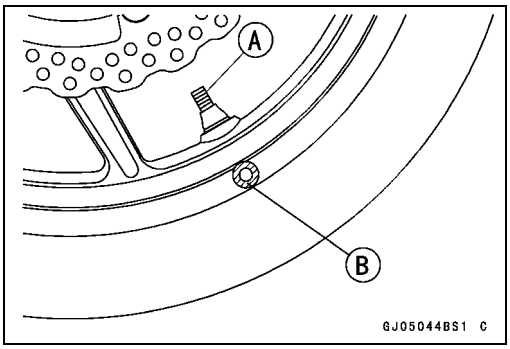

⚠ WARNING

Overinflating a tire can cause it to explode, causing serious injury or death. Be sure to install the valve core whenever inflating the tire, and do not inflate the tire to more than 400 kPa (4.0 kgf/cm², 57 psi).

Tires

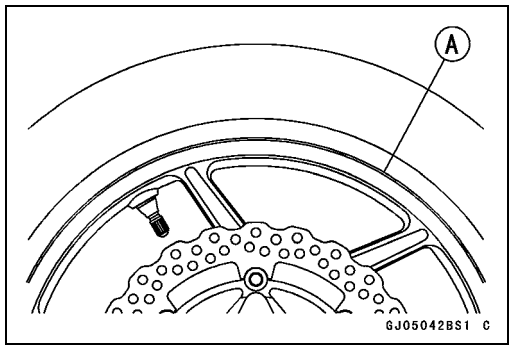

- Check to see that the rim lines [A] on both sides of the tire sidewalls are parallel with the rim flanges.

★If the rim flanges and tire sidewall rim lines are not parallel, remove the valve core.

- Lubricate the rim flanges and tire beads.
- Install the valve core and inflate the tire again.
- After the tire beads seat in the rim flanges, check for air leakage.

○Inflate the tire slightly above standard inflation.

○Use a soap and water solution or submerge the tire, and check for bubbles that would indicate leakage.

- Adjust the air pressure to the specified pressure (see Air Pressure Inspection in the Periodic Maintenance chapter).
- Install the air valve cap.
- Adjust the wheel balance (see Balance Adjustment).

Tire Repair

Currently two types of repair for tubeless tires have come into wide use. One type is called a temporary (external) repair which can be carried out without removing the tire from the rim, and the other type is called permanent (internal) repair which requires tire removal. It is generally understood that higher running durability is obtained by permanent (internal) repairs than by temporary (external) ones. Also, permanent (internal) repairs have the advantage of permitting a thorough examination for secondary damage not visible from external inspection of the tire. For these reasons, Kawasaki does not recommend temporary (external) repair. Only appropriate permanent (internal) repairs are recommended. Repair methods may vary slightly from make to make. Follow the repair methods indicated by the manufacturer of the repair tools and materials so that safe results can be obtained.

Hub Bearing

Hub Bearing Removal

- Remove the wheels (see Front/Rear Wheel Removal), and take out the following.
  Collars
  Coupling (Out of rear hub)
  Grease Seals

- Use the bearing remover to remove the hub bearings [A].

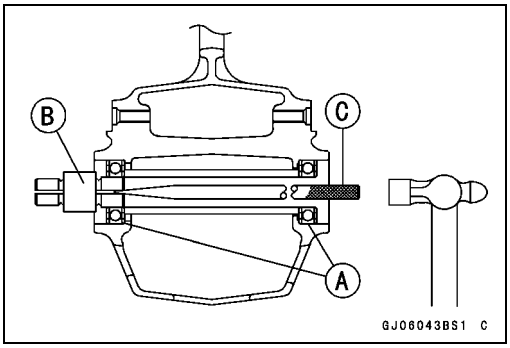

NOTICE

Do not lay the wheel on the ground with the disc facing down. This can damage or warp the disc. Place wooden blocks under the wheel so that the disc does not touch the ground.

Special Tools - Bearing Remover Head, ϕ20 × ϕ22 [B]: 57001-1293
Bearing Remover Shaft, ϕ13 [C]: 57001-1377

Hub Bearing Installation

- Before installing the hub bearings, blow any dirt or foreign particles out of the hub with compressed air to prevent contamination of the bearings.
- Replace the bearings with new ones.

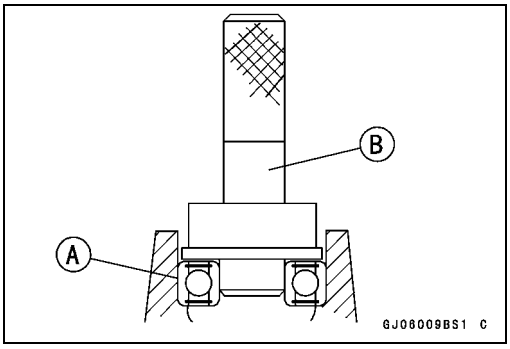

NOTE

○*Install the bearings so that the marked side faces out.*

- Install the bearings by using the bearing driver set which does not contact the bearing inner race.
- Press in each bearing [A] right until they are bottomed.

Special Tool - Bearing Driver Set [B]: 57001-1129

- Replace the grease seals with new ones.
- Press in the grease seals [A] so that the seal surface is flush [B] with the end of the hole.

○Apply high-temperature grease to the grease seal lips.

Special Tool - Bearing Driver Set [C]: 57001-1129

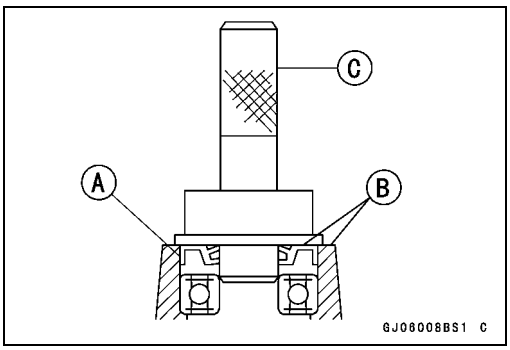

Hub Bearing Inspection

Since the hub bearings are made to extremely close tolerances, the clearance can not normally be measured.

NOTE

○*Do not remove any bearings for inspection. If any bearings are removed, they will need to be replaced with new ones.*

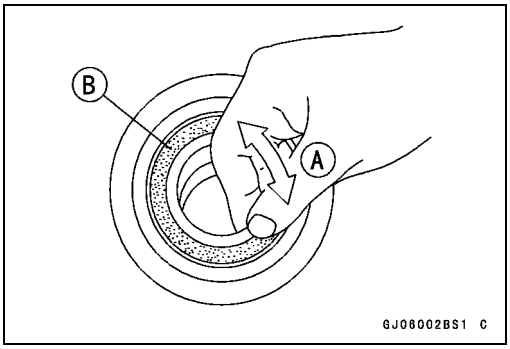

- Turn each bearing in the hub back and forth [A] while checking for plays, roughness, or binding.

★If bearing play, roughness or binding is found, replace the bearing.

- Examine the bearing seal [B] for tears or leakage.

★If the seal is torn or is leaking, replace the bearing.

Hub Bearing

Hub Bearing Lubrication

NOTE

○*Since the hub bearings are packed with grease and sealed, lubrication is not required.*

Final Drive

Table of Contents

Exploded View 11-2
Specifications 11-4
Special Tools 11-5
Drive Chain 11-6
- Drive Chain Slack Inspection 11-6
- Drive Chain Slack Adjustment 11-6
- Wheel Alignment Inspection/Adjustment 11-6
- Drive Chain Wear Inspection 11-6
- Drive Chain Lubrication 11-6
- Drive Chain Removal 11-6
- Drive Chain Installation 11-7

Sprocket, Coupling 11-10
- Engine Sprocket Removal 11-10
- Engine Sprocket Installation 11-10
- Rear Sprocket Removal 11-11
- Rear Sprocket Installation 11-11
- Coupling Installation 11-11
- Coupling Bearing Removal 11-12
- Coupling Bearing Installation 11-12
- Coupling Bearing Inspection 11-13
- Coupling Bearing Lubrication 11-13
- Coupling Damper Inspection 11-13
- Sprocket Wear Inspection 11-13
- Rear Sprocket Warp Inspection 11-14

Exploded View

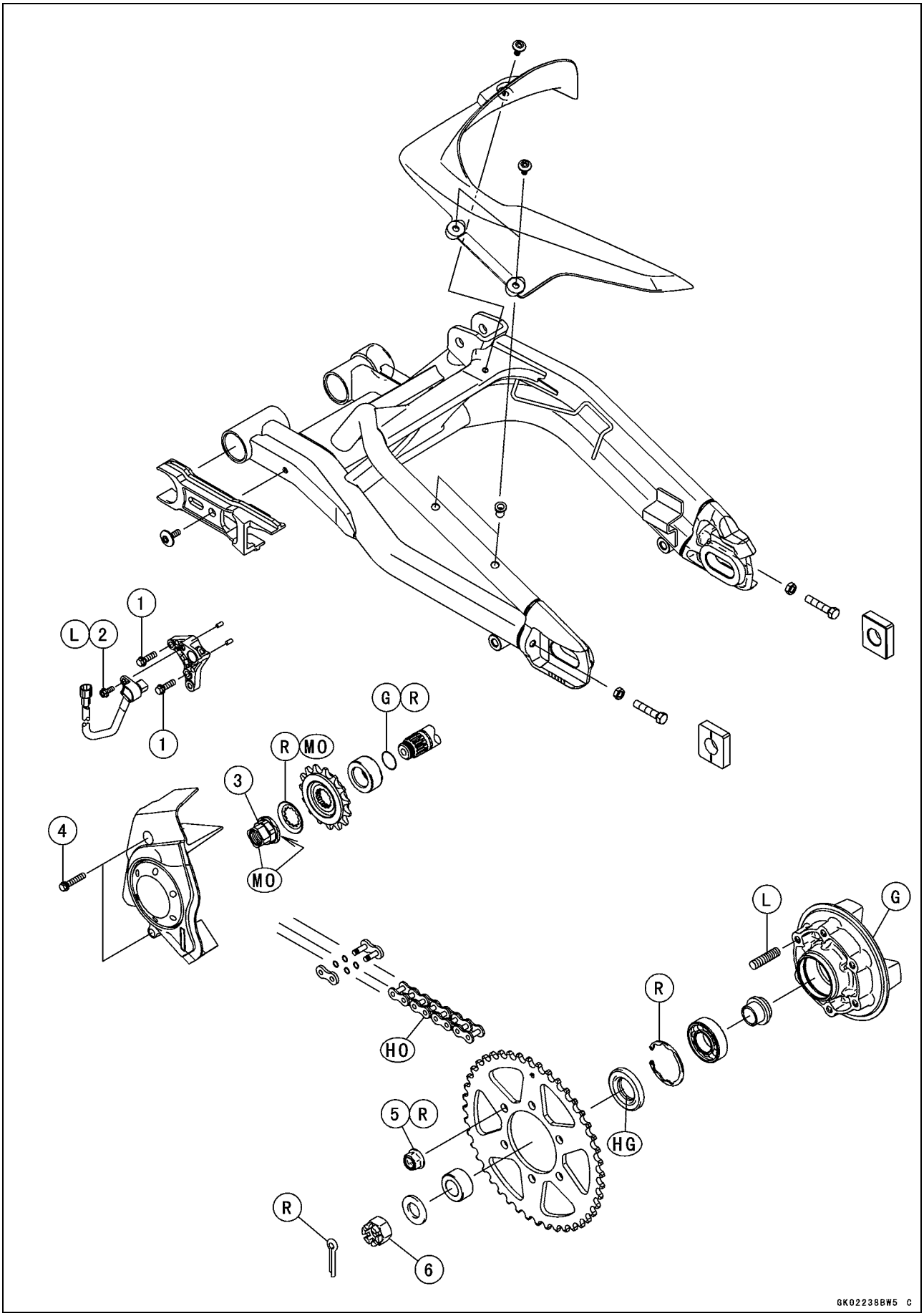

Exploded View

No.	Fastener	Torque			Remarks
		N·m	kgf·m	ft·lb	
1	Speed Sensor Bracket Bolts	9.8	1.0	87 in·lb	
2	Speed Sensor Bolt	7.8	0.80	69 in·lb	L
3	Engine Sprocket Nut	125	12.7	92	MO
4	Engine Sprocket Cover Bolts	9.8	1.0	87 in·lb	
5	Rear Sprocket Nuts	59	6.0	44	R
6	Rear Axle Nut	108	11.0	80	

G: Apply grease.
HG: Apply high-temperature grease.
HO: Apply heavy oil.
L: Apply a non-permanent locking agent.
MO: Apply molybdenum disulfide oil solution.
(mixture of the engine oil and molybdenum disulfide grease in a weight ratio 10:1)
R: Replacement Parts

Specifications

Item	Standard	Service Limit
Drive Chain		
Drive Chain Slack	25 ~ 35 mm (1.0 ~ 1.4 in.)	– – –
Drive Chain Wear (20-link Length)	317.5 ~ 318.2 mm (12.50 ~ 12.53 in.)	323 mm (12.7 in.)
Standard Chain:		
Make	DAIDO	– – –
Type	DID 520VP2-T	– – –
Link	114 Links	– – –
Sprockets		
Rear Sprocket Warp	TIR 0.4 mm (0.016 in.) or less	TIR 0.5 mm (0.020 in.)

Special Tools

Inside Circlip Pliers:
57001-143

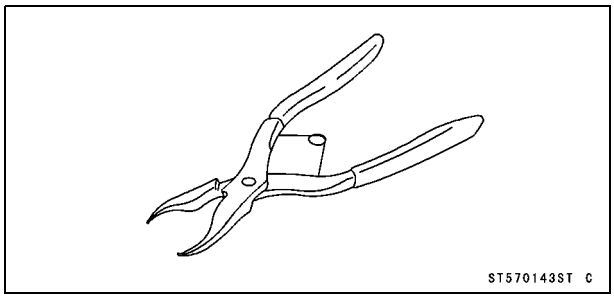

Bearing Driver Set:
57001-1129

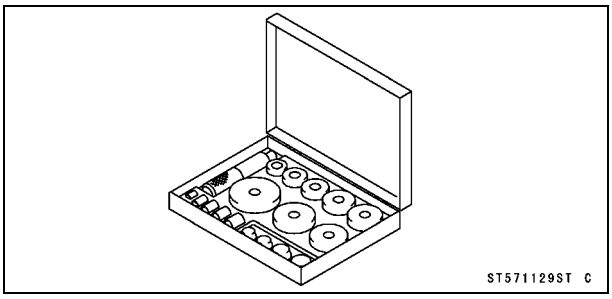

Drive Chain

Drive Chain Slack Inspection

- Refer to the Drive Chain Slack Inspection in the Periodic Maintenance chapter.

Drive Chain Slack Adjustment

- Refer to the Drive Chain Slack Adjustment in the Periodic Maintenance chapter.

Wheel Alignment Inspection/Adjustment

- Refer to the Wheel Alignment Inspection in the Periodic Maintenance chapter.

Drive Chain Wear Inspection

- Refer to the Drive Chain Wear Inspection in the Periodic Maintenance chapter.

Drive Chain Lubrication

- Refer to the Drive Chain Lubrication Condition Inspection in the Periodic Maintenance chapter.

Drive Chain Removal

NOTE

○*Since the drive chain is installed through the swingarm, the chain cannot be removed other than by cutting it. Prepare the new link pin, link plate, grease seals, and tools for rejoining the chain.*

- Remove the muffler (see Muffler Removal in the Engine Top End chapter).
- Using a suitable tool, replace the drive chain.

Recommended Tool - DID Chain Joint "ZJ"
Make DAIDO KOGYO

NOTICE
Read the Tool Manual before replacing the chain.

Body [A]
Pin Holder [B]
Positioning Pin [C]
"U" Holder [D]
Plate Holder [E]
Cutting and Riveting Pin [F]
Part for Riveting [G]
Part for Cutting [H]

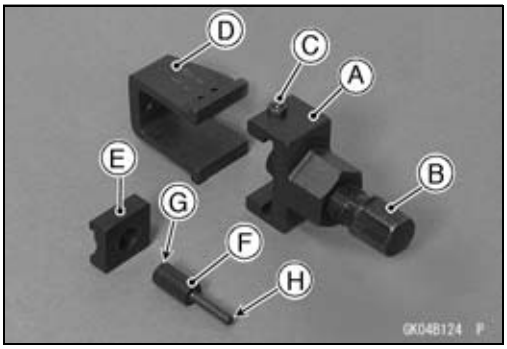

Drive Chain

- Grind [A] the heads of the link pin to make it flat.
- Set the cutting and riveting pin [C] in the pin holder [B] as shown in the figure.

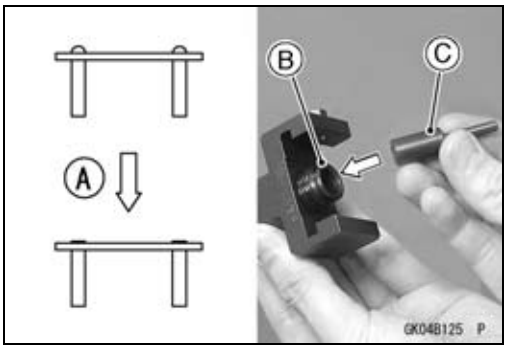

- Set the “U” holder and body, align the positioning pin [A] with the “A” mark [B].
- Tighten the pin holder by hand until the cutting and riveting pin touches the link pin.
- Be sure that the cutting and riveting pin hits center of the link pin.

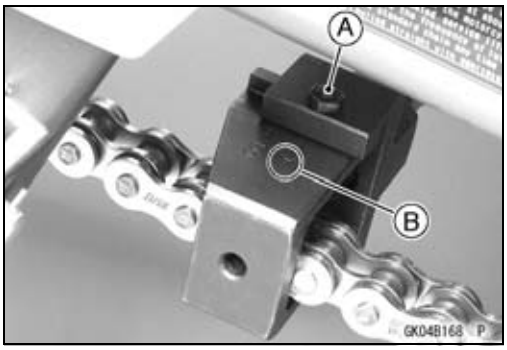

- Hold the body with a wrench [A].
- Turn the pin holder clockwise [B] with another wrench, and remove the link pin.
- Do the same procedure for removal of the other link pin.

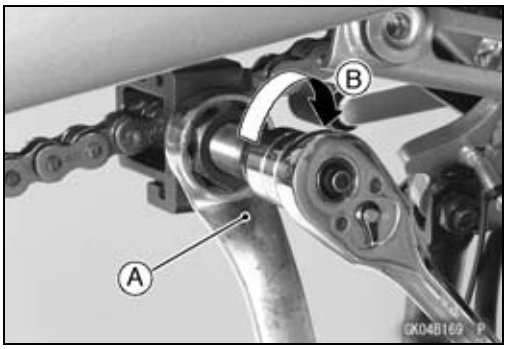

Drive Chain Installation

- Engage the new drive chain to the old drive chain, and change the position of the chains by pulling the old chain.
- Remove the old drive chain from the new drive chain.
- Replace the link pin [A], link plate and grease seals [B] [C] with new ones.
- Apply grease to the link pin and grease seals.
- Install the grease seals on the link pin and insert it in the ends of the drive chain.
- Install the link plate so that the mark [D] faces out.

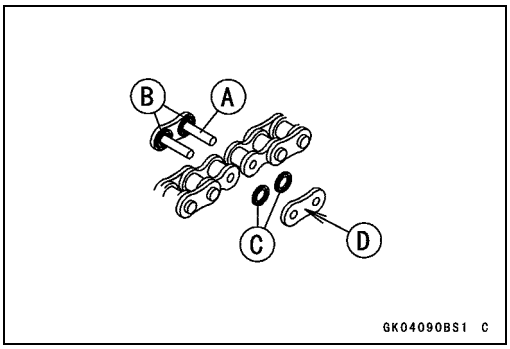

- Set the cutting and riveting pin [B] and plate holder [C] on the pin holder [A] as shown in the figure.

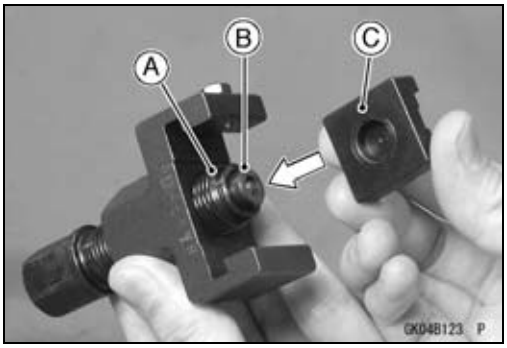

Drive Chain

- Set the “U” holder and body, align the positioning pin [A] with the “A” mark [B].
- Hold the body with a wrench [C].
- Turn the pin holder clockwise [D] with another wrench and press in the link plate on the link pin.
- Remove the “U” holder and body.

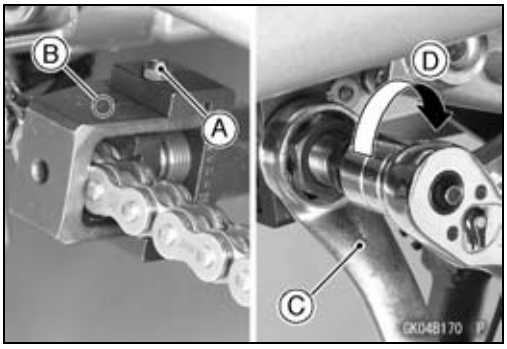

- Set the cutting and riveting pin [B] in the pin holder [A] as shown in the figure.

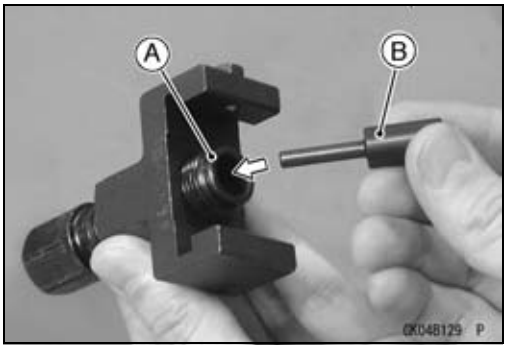

- Set the “U” holder and body, align the positioning pin [A] with the “B” mark [B].
- Tighten the pin holder by hand until the cutting and riveting pin touches the link pin.

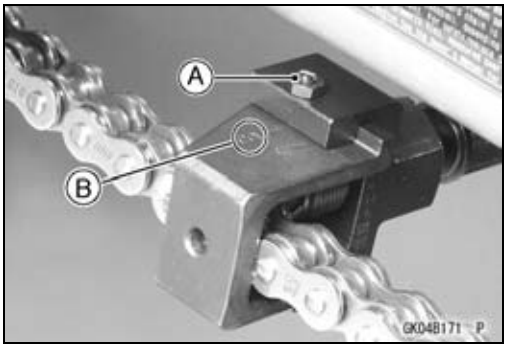

- Hold the body with a wrench [A].
- Turn the pin holder clockwise [B] with another wrench until the cutting and riveting pin touches the link plate.
- Do the same procedure for installation of the other link pin.

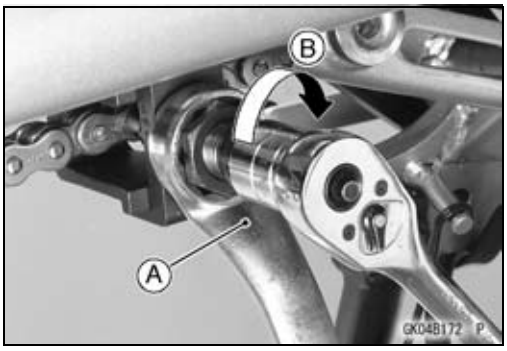

Drive Chain

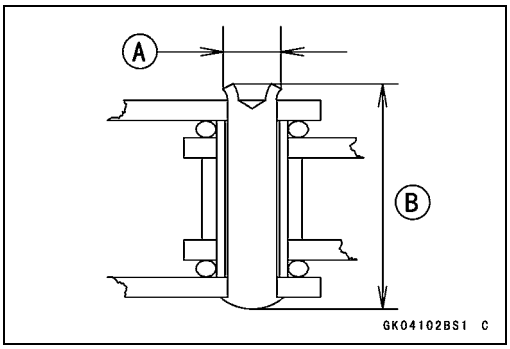

- After riveting, check the ends of the riveted pins for cracks.
- Measure the outside diameter [A] and the length [B] of the link pin.

Link Pin Outside Diameter
Standard: 5.5 ~ 5.8 mm (0.22 ~ 0.23 in.)

Link Pin Length
Standard: 20.20 mm (0.795 in.) or less

★If the reading is not within the specified range, cut and rejoin the chain again.

- Check that the rollers move smoothly.
- Adjust the drive chain slack after installing the chain (see Drive Chain Slack Adjustment in the Periodic Maintenance chapter).

Sprocket, Coupling

Engine Sprocket Removal

- Remove:
  Left Frame Cover (see Frame Cover Removal in the Frame chapter)
  Engine Sprocket Cover Bolts [A]
  Engine Sprocket Cover [B]

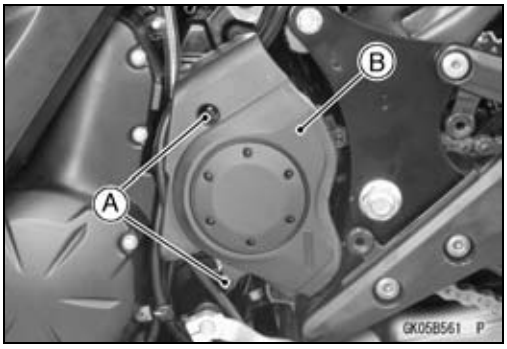

- Remove:
  Speed Sensor Bracket Bolts [A]
  Speed Sensor Bracket [B]

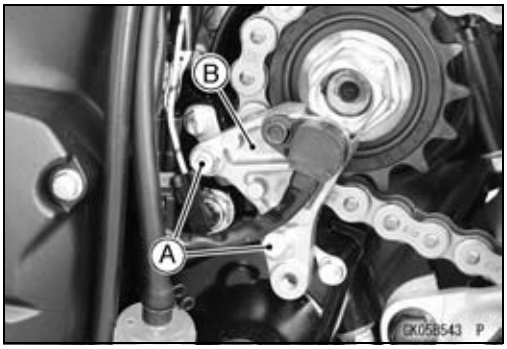

- Flatten out the bended washer [A].
- Remove the engine sprocket nut [B] and washer.

NOTE

○*Loosen the engine sprocket nut while applying the rear brake.*

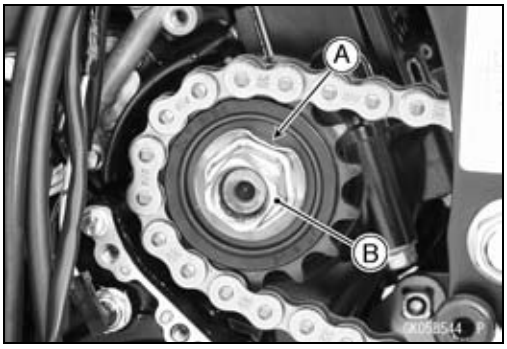

- Loosen the drive chain (see Drive Chain Slack Adjustment in the Periodic Maintenance chapter).
- Pull the engine sprocket [A] with drive chain [B] off the output shaft [C].
- Disengage the drive chain from the engine sprocket.

Engine Sprocket Installation

- Replace the sprocket washer [A] with a new one.
- Install the engine sprocket [B] so that “OUT SIDE” letters face outward.
- Apply molybdenum disulfide oil solution to the threads and seating surface of the engine sprocket nut [C].
- Tighten:

  Torque - Engine Sprocket Nut: 125 N·m (12.7 kgf·m, 92 ft·lb)

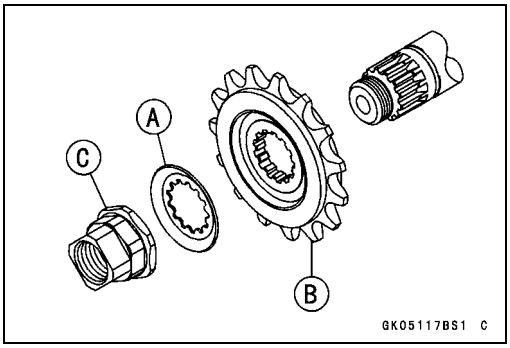

NOTE

○*Tighten the engine sprocket nut while applying the rear brake.*

- Bend one side of the washer over the nut.

Sprocket, Coupling

- Be sure that the dowel pins [A] are in position.
- Install the speed sensor bracket and tighten the bolts.

  Torque - Speed Sensor Bracket Bolts: 9.8 N·m (1.0 kgf·m, 87 in·lb)

- Run the leads and hoses correctly (see Cable, Wire, and Hose Routing section in the Appendix chapter).
- Install the engine sprocket cover and tighten the bolts.

  Torque - Engine Sprocket Cover Bolts: 9.8 N·m (1.0 kgf·m, 87 in·lb)

- Install the left frame cover (see Frame Cover Installation in the Frame chapter).
- Adjust the drive chain slack (see Drive Chain Slack Adjustment in the Periodic Maintenance chapter).

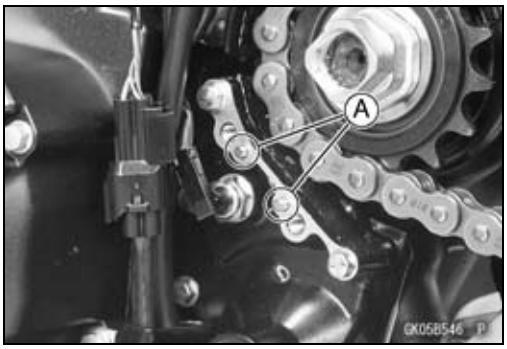

Rear Sprocket Removal

- Remove the rear wheel (see Rear Wheel Removal in the Wheels/Tires chapter).

NOTICE

Do not lay the wheel on the ground with the disc facing down. This can damage or warp the disc. Place blocks to under the wheel so that the disc does not touch the ground.

- Remove:
  Rear Sprocket Nuts [A]
  Rear Sprocket [B]

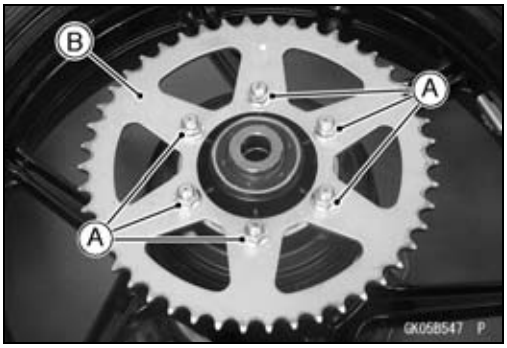

Rear Sprocket Installation

- Install the sprocket with the tooth number marking [A] facing outward.
- Replace the rear sprocket nuts with new ones.
- Tighten:

  Torque - Rear Sprocket Nuts: 59 N·m (6.0 kgf·m, 44 ft·lb)

- Install the rear wheel (see Rear Wheel Installation in the Wheels/Tires chapter).

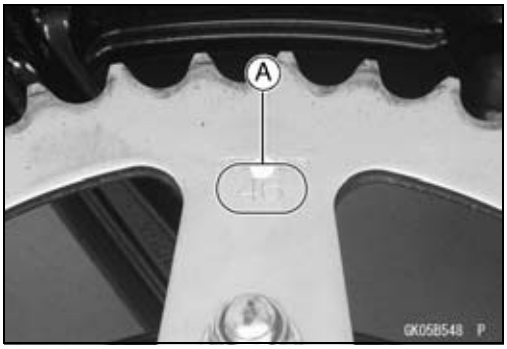

Coupling Installation

- Apply high-temperature grease to the following portions.
  Coupling Grease Seal Lips [A]
  Coupling Internal Surface [B]

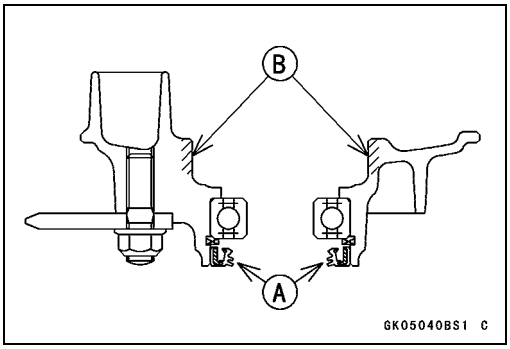

Sprocket, Coupling

- Replace the O-ring [A] with a new one and apply grease to it.
- Install:
  O-ring
  Collar [B]
  Coupling

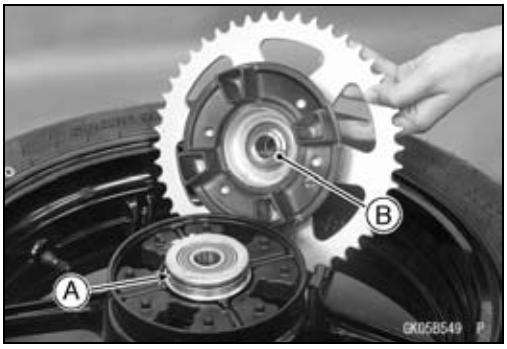

Coupling Bearing Removal

- Remove:
  Coupling
  Grease Seal
  Circlip [A]

  Special Tool - Inside Circlip Pliers: 57001-143

- Remove the bearing [A] by tapping from the wheel side.

  Special Tool - Bearing Driver Set [B]: 57001-1129

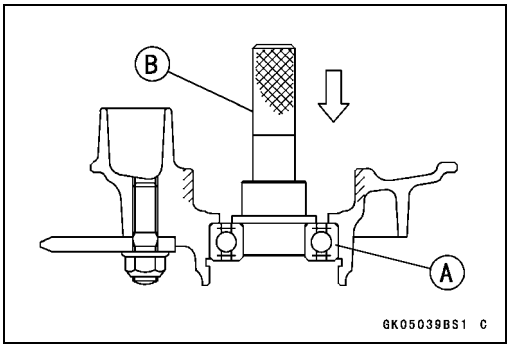

Coupling Bearing Installation

- Replace the bearing with a new one.
- Press in the bearing [A] until it is bottomed.

  Special Tool - Bearing Driver Set [B]: 57001-1129
- Replace the circlip with a new one and install it.

  Special Tool - Inside Circlip Pliers: 57001-143

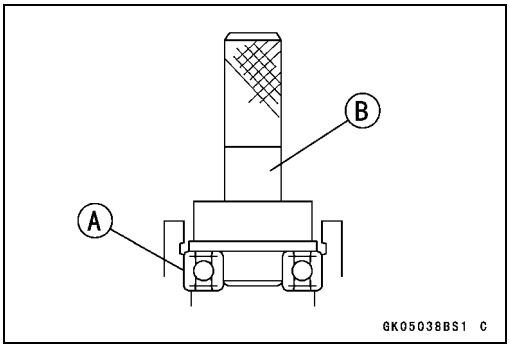

- Replace the grease seal with a new one.
- Apply high-temperature grease to the grease seal lips.
- Press in the grease seal so that the seal surface is flush with the end of the hole.

  Special Tool - Bearing Driver Set: 57001-1129

Sprocket, Coupling

Coupling Bearing Inspection

Since the coupling bearing is made to extremely close tolerances, the clearance can not normally be measured.

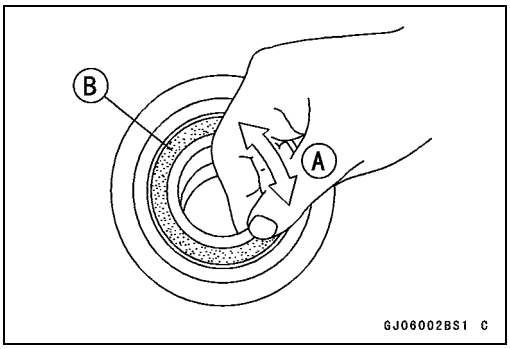

NOTE

○*It is not necessary to remove the coupling bearing for inspection. If the bearing is removed, it will need to be replaced with a new one.*

- Turn the bearing in the coupling back and forth [A] while checking for plays, roughness or binding.

★If the bearing play, roughness or binding is found, replace the bearing.

- Inspect the bearing seal [B] for tears or leakage.

★If the seal is torn or is leaking, replace the bearing.

Coupling Bearing Lubrication

NOTE

○*Since the coupling bearing is packed with grease and sealed, lubrication is not required.*

Coupling Damper Inspection

- Remove the rear wheel coupling, and inspect the rubber dampers [A].
- Replace the dampers if they appear damaged or deteriorated.

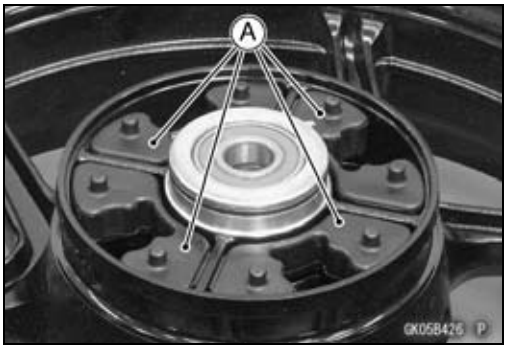

Sprocket Wear Inspection

- Visually inspect the engine and rear sprocket teeth for wear and damage.

★If the teeth are worn as illustrated, replace the sprocket, and inspect the drive chain wear (see Drive Chain Wear Inspection in the Periodic Maintenance chapter).

Worn Tooth (Engine Sprocket) [A]
Worn Tooth (Rear Sprocket) [B]
Direction of Rotation [C]

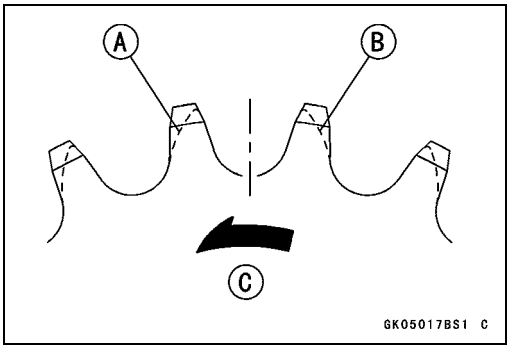

NOTE

○*If a sprocket requires replacement, the chain is probably worn also. When replacing a sprocket, inspect the chain.*

Sprocket, Coupling

Rear Sprocket Warp Inspection

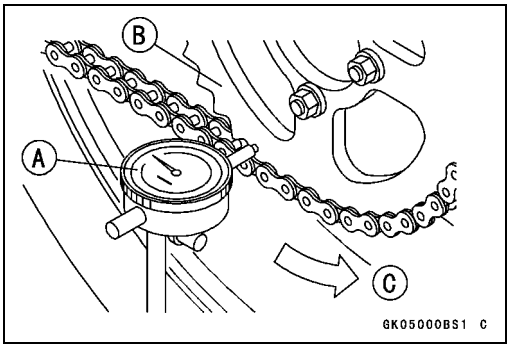

- Raise the rear wheel off the ground with a stand so that it will turn freely.
- Set a dial gauge [A] against the rear sprocket [B] near the teeth as shown in the figure, and rotate [C] the rear wheel to measure the sprocket runout (warp). The difference between the highest and lowest dial gauge readings is the amount of runout (warp).

★If the runout exceeds the service limit, replace the rear sprocket.

Rear Sprocket Warp

Standard:	**TIR 0.4 mm (0.016 in.) or less**
Service Limit:	**TIR 0.5 mm (0.020 in.)**

Brakes

Table of Contents

Exploded View 12-3
Specifications 12-12
Special Tools 12-13
Brake Lever, Brake Pedal 12-14
- Brake Lever Position Adjustment 12-14
- Brake Pedal Position Inspection 12-14
- Brake Pedal Position Adjustment 12-14
- Brake Pedal Removal 12-15
- Brake Pedal Installation 12-15

Calipers 12-16
- Front Caliper Removal 12-16
- Rear Caliper Removal 12-16
- Caliper Installation 12-16
- Front Caliper Disassembly 12-17
- Front Caliper Assembly 12-17
- Rear Caliper Disassembly 12-17
- Rear Caliper Assembly 12-17
- Caliper Fluid Seal Damage Inspection 12-17
- Caliper Dust Seal Damage Inspection 12-18
- Caliper Dust Boot and Friction Boot Damage Inspection 12-18
- Caliper Piston and Cylinder Damage Inspection 12-19
- Caliper Holder Shaft Wear Inspection 12-19

Brake Pads 12-20
- Front Brake Pad Removal 12-20
- Front Brake Pad Installation 12-20
- Rear Brake Pad Removal 12-20
- Rear Brake Pad Installation 12-20
- Brake Pad Wear Inspection 12-20

Master Cylinder 12-21
- Front Master Cylinder Removal 12-21
- Front Master Cylinder Installation 12-21
- Rear Master Cylinder Removal 12-22
- Rear Master Cylinder Installation 12-23
- Master Cylinder Disassembly 12-23
- Master Cylinder Assembly 12-23
- Master Cylinder Inspection 12-24

Brake Disc 12-25
- Brake Disc Removal 12-25
- Brake Disc Installation 12-25
- Brake Disc Wear Inspection 12-25
- Brake Disc Warp Inspection 12-25

Brake Fluid 12-26
- Brake Fluid Level Inspection 12-26
- Brake Fluid Change 12-26
- Brake Line Bleeding 12-26

Brake Hose 12-29
- Brake Hose Removal/Installation 12-29
- Brake Hose Inspection 12-29

Anti-Lock Brake System (Equipped Models) 12-30
- Parts Location 12-30

ABS Servicing Precautions 12-34
ABS Troubleshooting Outline 12-36
Inquiries to Rider 12-39
Self-diagnosis Outline 12-41
Self-diagnosis Procedures 12-41
Service Code Clearing Procedures 12-42
How to Read Service Codes 12-44
How to Erase Service Codes 12-44
Yellow ABS Indicator Light (LED) Inspection 12-46
Yellow ABS Indicator Light (LED) does not go on (When the Ignition Switch turned to ON) 12-46
Yellow ABS Indicator Light (LED) goes on (When the Motorcycle is Running, - No Service Code) 12-47
Solenoid Valve Inspection (Service Code 13, 14, 17, 18) 12-47
ABS Solenoid Valve Relay Inspection (Service Code 19) 12-47
Front, Rear Wheel Rotation Difference Abnormal (Service Code 25) 12-49
ABS Motor Relay Inspection (Service Code 35) 12-49
Front Wheel Rotation Sensor Signal Abnormal (Service Code 42) 12-50
Front Wheel Rotation Sensor Wiring Inspection (Service Code 43) 12-51
Rear Wheel Rotation Sensor Signal Abnormal (Service Code 44) 12-52
Rear Wheel Rotation Sensor Wiring Inspection (Service Code 45) 12-53
Power Supply Voltage Abnormal (Under-Voltage) (Service Code 52) 12-53
Power Supply Voltage Abnormal (Over-Voltage) (Service Code 53) 12-54
ECU Inspection (Service Code 55) 12-55
ABS Hydraulic Unit Removal 12-56
ABS Hydraulic Unit Installation 12-58
ABS Hydraulic Unit Inspection 12-58
Front Wheel Rotation Sensor Removal 12-58
Front Wheel Rotation Sensor Installation 12-59
Rear Wheel Rotation Sensor Removal 12-59
Rear Wheel Rotation Sensor Installation 12-60
Wheel Rotation Sensor Inspection 12-60
Wheel Rotation Sensor Air Gap Inspection 12-61
Wheel Rotation Sensor Rotor Inspection 12-61
Brake Hose and Pipe Removal/Installation 12-61
Brake Hose and Pipe Inspection 12-61
ABS Solenoid Valve Relay Fuse 15 A Removal 12-61
ABS Motor Relay Fuse 25 A Removal 12-62
Fuse Installation 12-62
Fuse Inspection 12-62

Exploded View

This page intentionally left blank.

Exploded View

EX650E Model

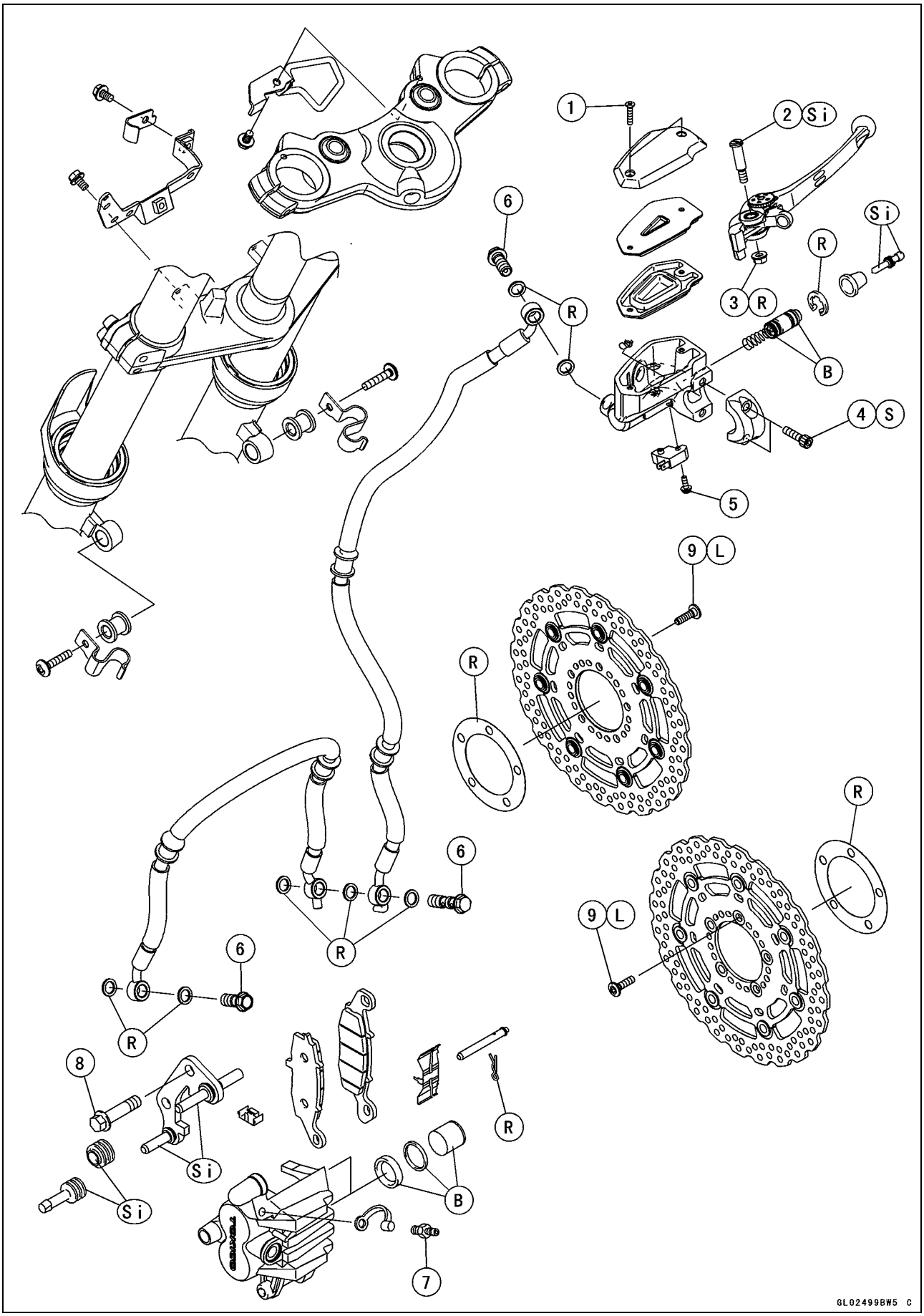

Exploded View

No.	Fastener	Torque			Remarks
		N·m	kgf·m	ft·lb	
1	Front Brake Reservoir Cap Screws	1.5	0.15	13 in·lb	
2	Brake Lever Pivot Bolt	1.0	0.10	9 in·lb	Si
3	Brake Lever Pivot Bolt Locknut	5.9	0.60	52 in·lb	R
4	Front Master Cylinder Clamp Bolts	11	1.1	97 in·lb	S
5	Front Brake Light Switch Screw	1.2	0.12	11 in·lb	
6	Brake Hose Banjo Bolts	25	2.5	18	
7	Caliper Bleed Valve	7.8	0.80	69 in·lb	
8	Front Caliper Mounting Bolts	34	3.5	25	
9	Brake Disc Mounting Bolts	27	2.8	20	L

B: Apply brake fluid.
L: Apply a non-permanent locking agent.
R: Replacement Parts
S: Follow the specified tightening sequence.
Si: Apply silicone grease (ex. PBC grease).

Exploded View

EX650E Model

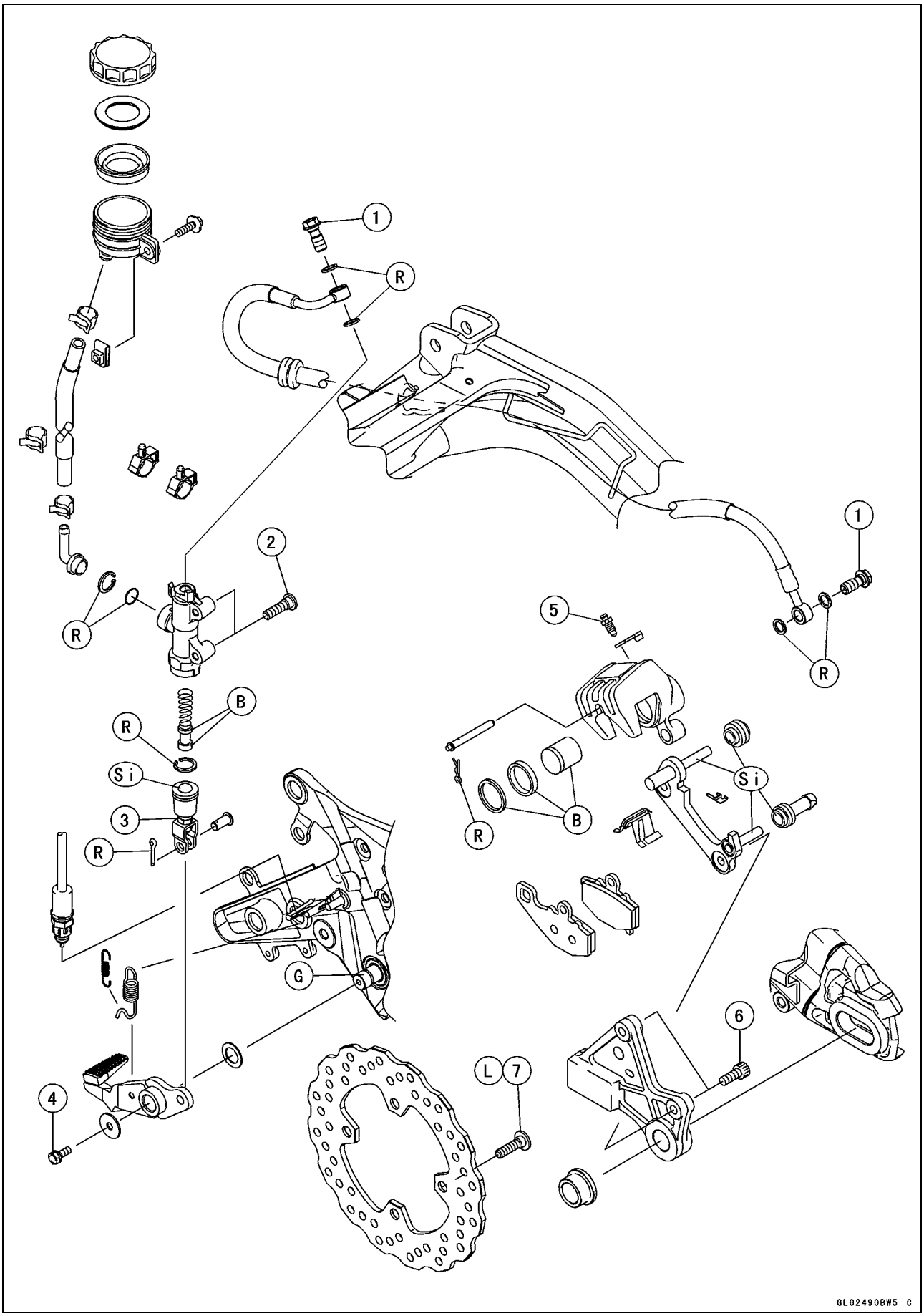

Exploded View

No.	Fastener	Torque			Remarks
		N·m	kgf·m	ft·lb	
1	Brake Hose Banjo Bolts	25	2.5	18	
2	Rear Master Cylinder Mounting Bolts	25	2.5	18	
3	Rear Master Cylinder Push Rod Locknut	17	1.7	13	
4	Brake Pedal Bolt	8.8	0.90	78 in·lb	
5	Caliper Bleed Valve	7.8	0.80	69 in·lb	
6	Rear Caliper Mounting Bolts	25	2.5	18	
7	Brake Disc Mounting Bolts	27	2.8	20	L

B: Apply brake fluid.
G: Apply grease.
L: Apply a non-permanent locking agent.
R: Replacement Parts
Si: Apply silicone grease (ex. PBC grease).

Exploded View

EX650F Model

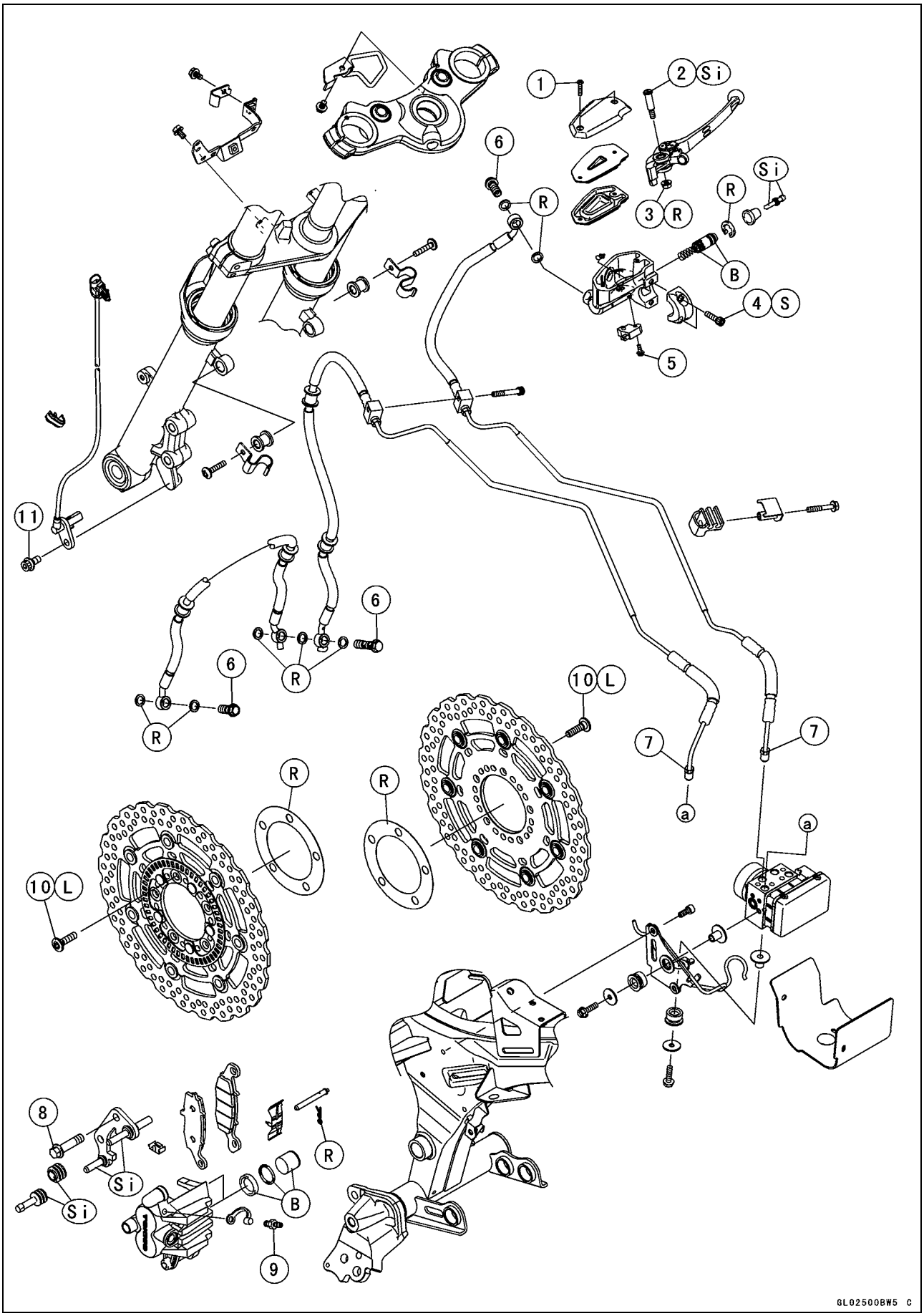

Exploded View

No.	Fastener	Torque			Remarks
		N·m	kgf·m	ft·lb	
1	Front Brake Reservoir Cap Screws	1.5	0.15	13 in·lb	
2	Brake Lever Pivot Bolt	1.0	0.10	9 in·lb	Si
3	Brake Lever Pivot Bolt Locknut	5.9	0.60	52 in·lb	R
4	Front Master Cylinder Clamp Bolts	11	1.1	97 in·lb	S
5	Front Brake Light Switch Screw	1.2	0.12	11 in·lb	
6	Brake Hose Banjo Bolts	25	2.5	18	
7	Brake Pipe Joint Nuts	18	1.8	13	
8	Front Caliper Mounting Bolts	34	3.5	25	
9	Caliper Bleed Valve	7.8	0.80	69 in·lb	
10	Brake Disc Mounting Bolts	27	2.8	20	L
11	Front Wheel Rotation Sensor Bolt	20	2.0	15	

B: Apply brake fluid.
L: Apply a non-permanent locking agent.
R: Replacement Parts
S: Follow the specified tightening sequence.
Si: Apply silicone grease (ex. PBC grease).

NOTE

○*When disassembling the brake hose and pipe, disassemble them by the unit as shown in the exploded view.*

Exploded View

EX650F Model

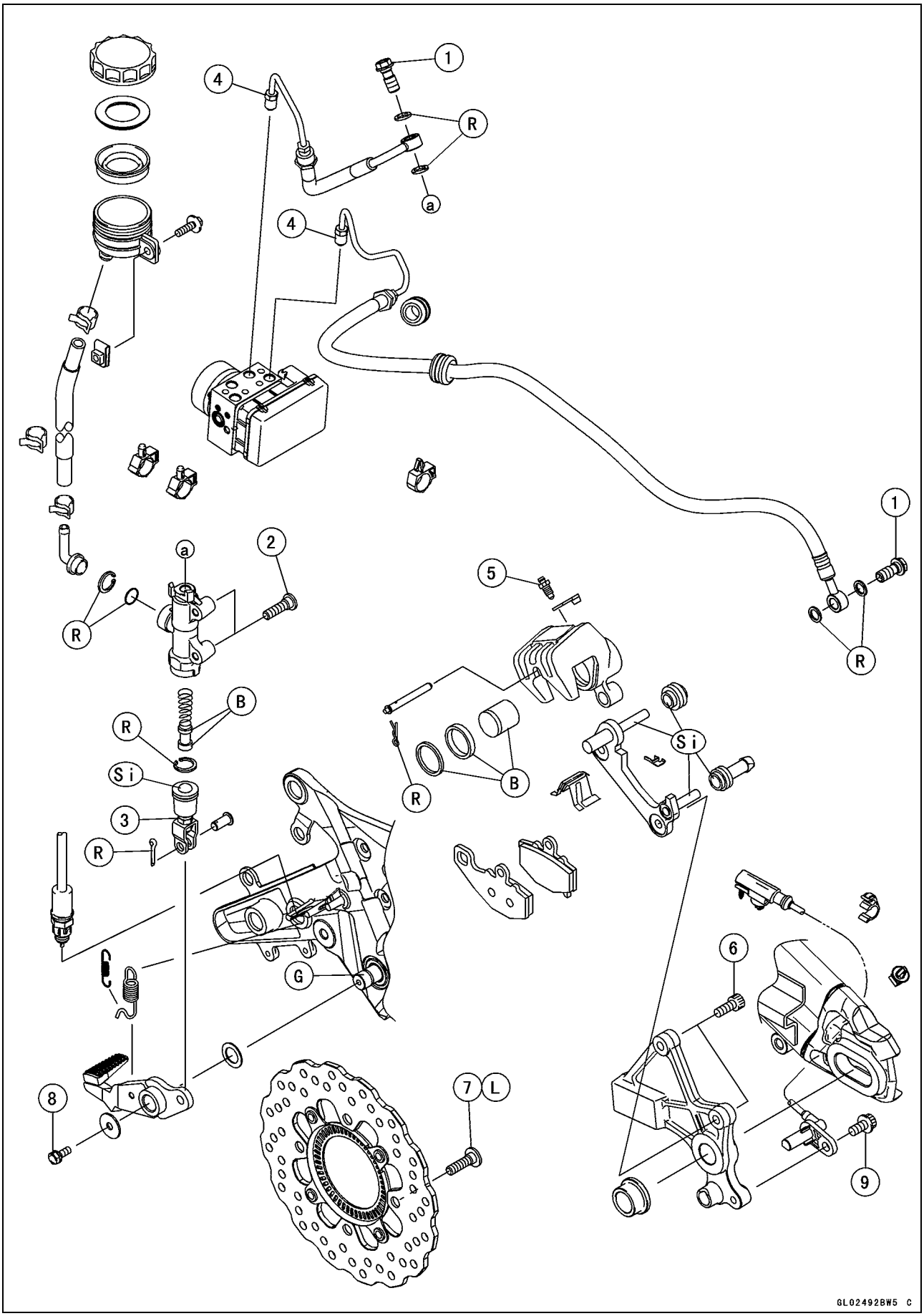

Exploded View

No.	Fastener	Torque			Remarks
		N·m	kgf·m	ft·lb	
1	Brake Hose Banjo Bolts	25	2.5	18	
2	Rear Master Cylinder Mounting Bolts	25	2.5	18	
3	Rear Master Cylinder Push Rod Locknut	17	1.7	13	
4	Brake Pipe Joint Nuts	18	1.8	13	
5	Caliper Bleed Valve	7.8	0.80	69 in·lb	
6	Rear Caliper Mounting Bolts	25	2.5	18	
7	Brake Disc Mounting Bolts	27	2.8	20	L
8	Brake Pedal Bolt	8.8	0.90	78 in·lb	
9	Rear Wheel Rotation Sensor Bolt	20	2.0	15	

B: Apply brake fluid.
G: Apply grease.
L: Apply a non-permanent locking agent.
R: Replacement Parts
Si: Apply silicone grease (ex. PBC grease).

NOTE

○*When disassembling the brake hose and pipe, disassemble them by the unit as shown in the exploded view.*

Specifications

Item	Standard	Service Limit
Brake Lever, Brake Pedal		
Lever Position	5-way adjustable (to suit rider)	– – –
Lever Free Play	Non-adjustable	– – –
Pedal Position	About 50 mm (2.0 in.) below top of footpeg	– – –
Pedal Free Play	Non-adjustable	– – –
Brake Pads		
Lining Thickness:		
Front	4.5 mm (0.18 in.)	1 mm (0.04 in.)
Rear	5.0 mm (0.20 in.)	1 mm (0.04 in.)
Brake Discs		
Thickness:		
Front	4.8 ~ 5.2 mm (0.19 ~ 0.20 in.)	4.5 mm (0.18 in.)
Rear	4.8 ~ 5.2 mm (0.19 ~ 0.20 in.)	4.5 mm (0.18 in.)
Runout	TIR 0.15 mm (0.0059 in.) or less	TIR 0.3 mm (0.01 in.)
Brake Fluid		
Grade	DOT4	– – –
ABS (Equipped Models)		
Wheel Rotation Sensor Air Gap:		
Front	0.3 ~ 1.7 mm (0.01 ~ 0.07 in.)	– – –
Rear	0.3 ~ 1.7 mm (0.01 ~ 0.07 in.)	– – –

Special Tools

Jack:
57001-1238

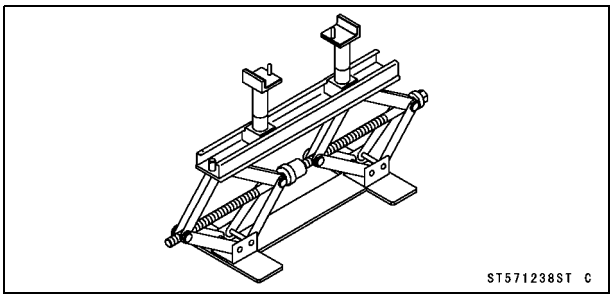

Needle Adapter Set:
57001-1457

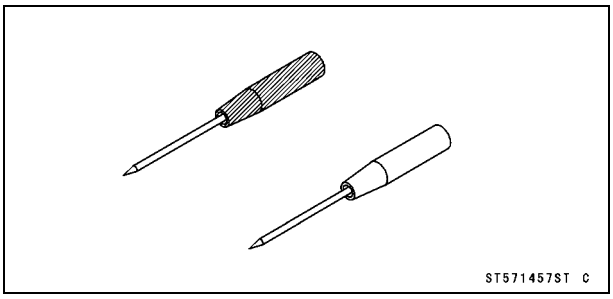

Hand Tester:
57001-1394

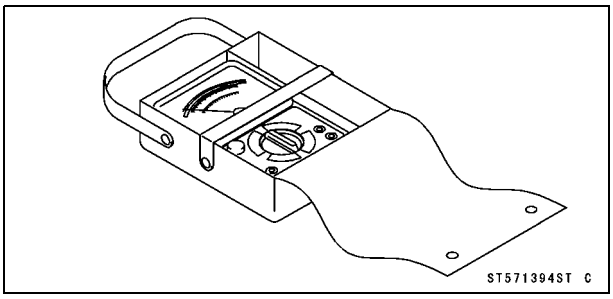

Brake Lever, Brake Pedal

Brake Lever Position Adjustment

The brake lever adjuster has 5 positions so that the brake lever position can be adjusted to suit the operator's hand.

- Push the lever forward and turn the adjuster [A] to align the number with the arrow mark [B] on the lever holder.

○The distance from the grip to the lever is minimum at number 5 and maximum at number 1.

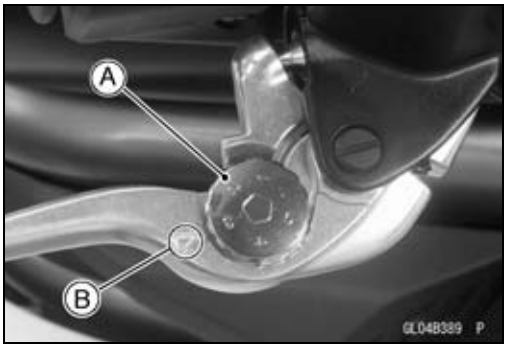

Brake Pedal Position Inspection

- Measure the brake pedal position [A].

Pedal Position

Standard: About 50 mm (2.0 in.) below top of footpeg [B]

★If it is incorrect, adjust the brake pedal position.

Brake Pedal Position Adjustment

NOTE

○*Usually it is not necessary to adjust the pedal position, but always adjust it when the push rod locknut has been loosened.*

- Remove:
  Right Footpeg Stay (see Footpeg Stay Removal in the Frame chapter)

- Loosen the rear master cylinder push rod locknut [A] and turn the push rod with the hex head [B] to achieve the correct pedal position.

★If the length [C] shown is **70 ±1 mm (2.76 ±0.04 in.)**, the pedal position will be within the standard range.

- Tighten:

Torque - Rear Master Cylinder Push Rod Locknut: 17 N·m (1.7 kgf·m, 13 ft·lb)

- Install the right footpeg stay (see Footpeg Stay Installation in the Frame chapter).
- Inspect the brake light switch operation (see Brake Light Switch Operation Inspection in the Periodic Maintenance chapter).

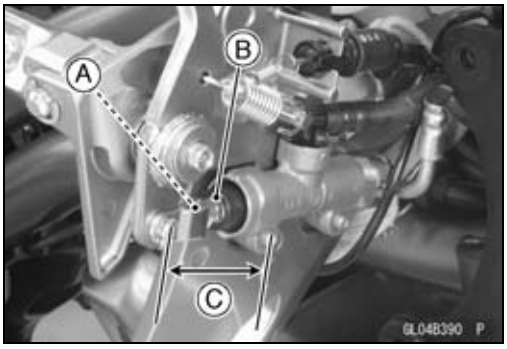

Brake Lever, Brake Pedal

Brake Pedal Removal

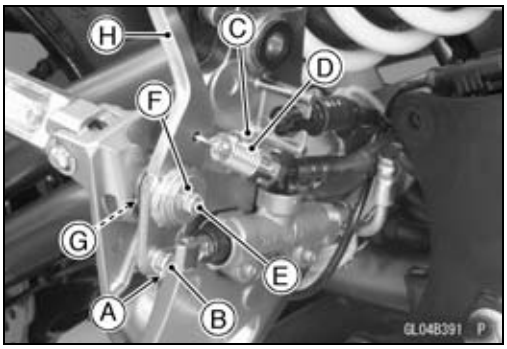

- Remove:
  Right Footpeg Stay (see Footpeg Stay Removal in the Frame chapter)
  Cotter Pin [A]
  Joint Pin [B]
  Rear Brake Light Switch Spring [C]
  Return Spring [D]
  Brake Pedal Bolt [E] and Washer [F]
  Washer [G]
- Take out the brake pedal [H].

Brake Pedal Installation

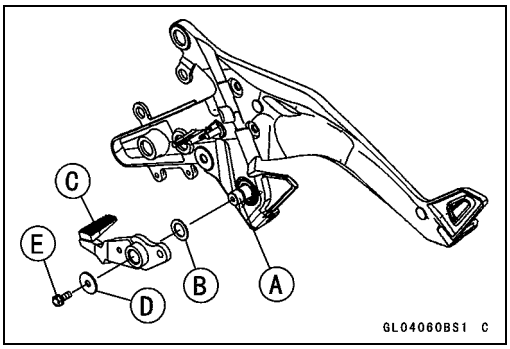

- Apply grease to the pivot shaft [A].
- Install:
  Washer [B]
  Brake Pedal [C]
  Washer [D]
- Tighten:

  Torque - Brake Pedal Bolt [E]: 8.8 N·m (0.90 kgf·m, 78 in·lb)

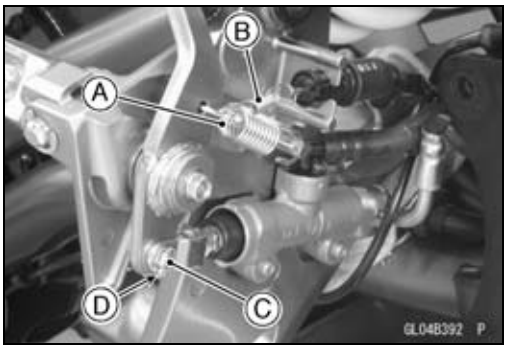

- Install the following parts as shown in the figure.
  Return Spring [A]
  Rear Brake Light Switch Spring [B]
- Install the joint pin [C].
- Replace the cotter pin [D] with a new one.
- Insert the cotter pin and bend the pin ends as shown.
- Install the right footpeg stay (see Footpeg Stay Installation in the Frame chapter).
- Inspect the brake pedal position (see Brake Pedal Position Inspection).

Calipers

Front Caliper Removal

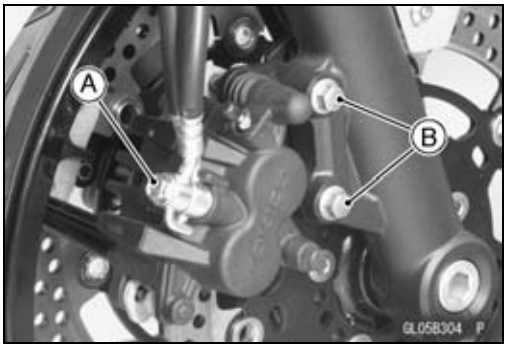

- Loosen the banjo bolt [A], being careful not to spill brake fluid.
- Remove the caliper mounting bolts [B].
- Remove the banjo bolt and take off the brake hoses from the caliper.

NOTICE
Immediately wipe up any brake fluid that spilled.

NOTE

○*If the caliper is to be disassembled after removal and compressed air is not available, disassemble the caliper before brake hose removal (see Caliper Rubber Parts Replacement in the Periodic Maintenance chapter).*

Rear Caliper Removal

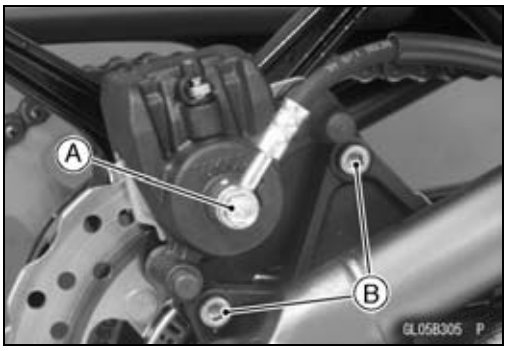

- Loosen the banjo bolt [A], being careful not to spill brake fluid.
- Remove the caliper mounting bolts [B].
- Remove the banjo bolt and take off the brake hose from the caliper.

NOTICE
Immediately wipe up any brake fluid that spilled.

NOTE

○*If the caliper is to be disassembled after removal and compressed air is not available, disassemble the caliper before brake hose removal (see Caliper Rubber Parts Replacement in the Periodic Maintenance chapter).*

Caliper Installation

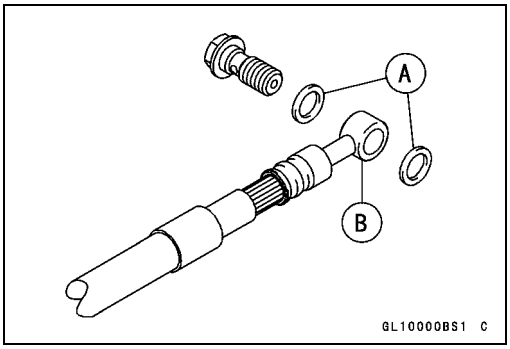

- Install the caliper(s).
- Tighten:

Torque - Front Caliper Mounting Bolts: 34 N·m (3.5 kgf·m, 25 ft·lb)
Rear Caliper Mounting Bolts: 25 N·m (2.5 kgf·m, 18 ft·lb)

- Replace the washers [A] on each side of hose fitting [B] with new ones.
- Install the brake hose lower end.
- Tighten:

Torque - Brake Hose Banjo Bolts: 25 N·m (2.5 kgf·m, 18 ft·lb)

Calipers

- Bleed the brake line (see Brake Line Bleeding).
- Check the fluid level in the brake reservoirs (see Brake Fluid Level Inspection in the Periodic Maintenance chapter).
- Check the brake for good braking power, no brake drag, and no fluid leakage.

⚠ WARNING

After servicing, it takes several applications of the brake lever or pedal before the brake pads contact the disc, which could result in increased stopping distance and cause an accident resulting in injury or death. Do not attempt to ride the motorcycle until a firm brake lever or pedal is obtained by pumping the lever or pedal until the pads are against the disc.

Front Caliper Disassembly

- Refer to the Caliper Rubber Parts Replacement in the Periodic Maintenance chapter.

Front Caliper Assembly

- Refer to the Caliper Rubber Parts Replacement in the Periodic Maintenance chapter.

Rear Caliper Disassembly

- Refer to the Caliper Rubber Parts Replacement in the Periodic Maintenance chapter.

Rear Caliper Assembly

- Refer to the Caliper Rubber Parts Replacement in the Periodic Maintenance chapter.

Caliper Fluid Seal Damage Inspection

The fluid seal (piston seal) [A] is placed around the piston to maintain clearance between the pad and the disc. If the seal is in a poor condition, it could lead the pad to wear excessively or the brake to drag, which may cause the temperature of the discs or the brake fluid to increase.

- Replace the fluid seal(s) if it shows any of the conditions listed below.

○Brake fluid leakage around the pad.
○Brakes overheat.
○Considerable difference in inner and outer pad wear.
○Seal and piston are stuck together.
★If the fluid seal is replaced, replace the dust seal(s) [B] as well. Also, replace all seals every other time the pads are changed.

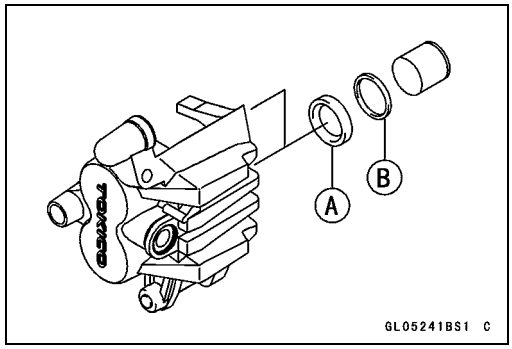

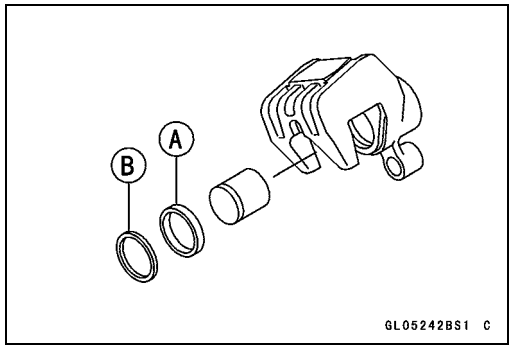

Calipers

Caliper Dust Seal Damage Inspection

- Check that the dust seal(s) [A] are not cracked, worn, swollen, or otherwise damaged.

★If they show any damage, replace the dust seals with new ones.

Piston(s) [B]
Fluid Seal(s) [C]

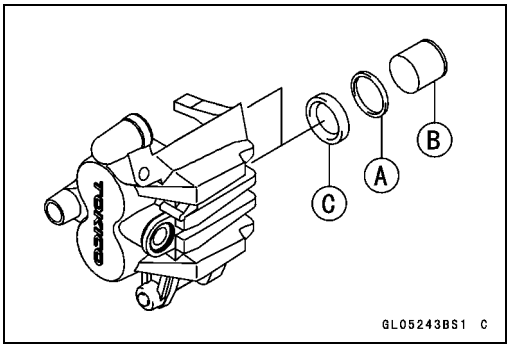

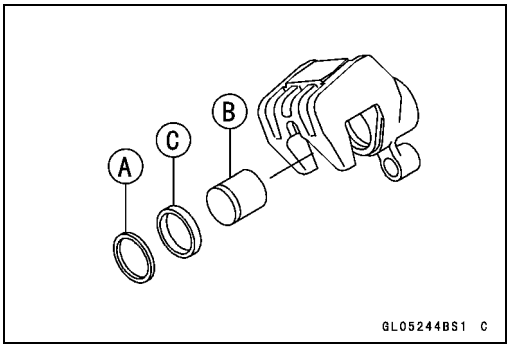

Caliper Dust Boot and Friction Boot Damage Inspection

- Check that the dust boot [A] and friction boot [B] are not cracked, worn, swollen, or otherwise damaged.

★If they show any damage, replace it.

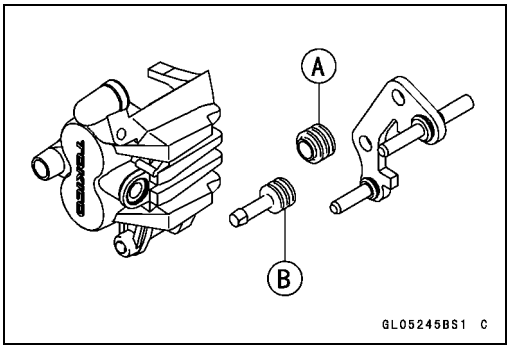

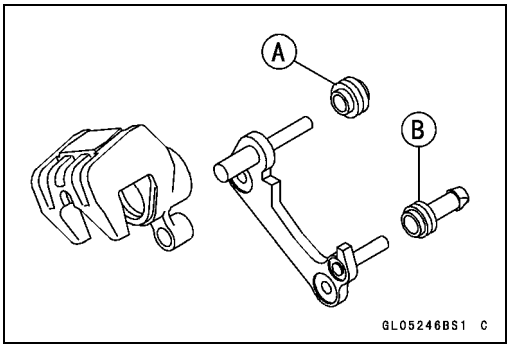

Calipers

Caliper Piston and Cylinder Damage Inspection

- Visually inspect the piston(s) [A] and cylinder surface(s) [B].

★Replace the caliper if the cylinder and piston are badly scores or rusty.

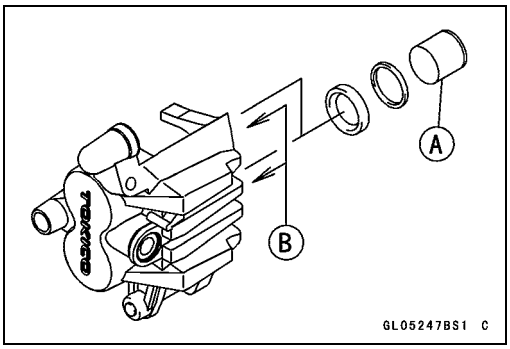

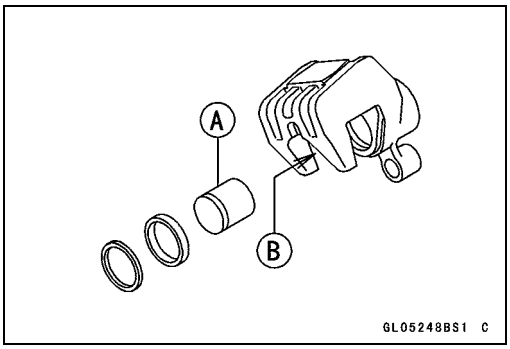

Caliper Holder Shaft Wear Inspection

The caliper body must slide smoothly on the caliper holder shaft [A]. If the body does not slide smoothly, one pad will wear more than the other, pad wear will increase, and constant drag on the disc will raise brake and brake fluid temperature.

- Check to see that the caliper holder shaft is not badly worn or stepped, and that the friction boot [B] is not damaged.

★If the friction boot is damaged, replace it. To replace the friction boot, remove the pads and the caliper holder.

★If the caliper holder shaft is damage, replace it.

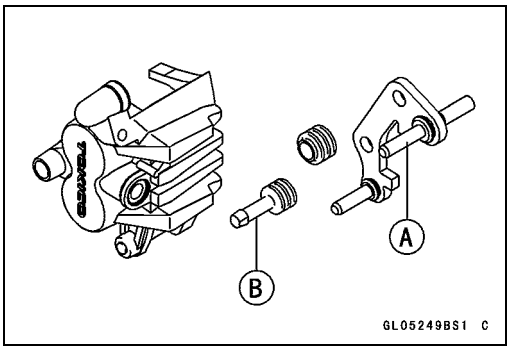

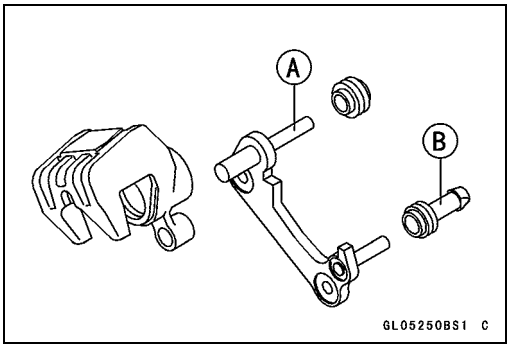

Brake Pads

Front Brake Pad Removal

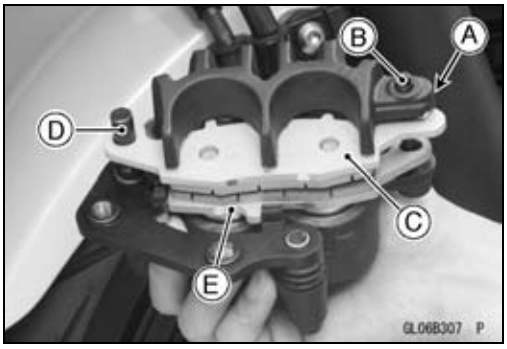

- Remove the front caliper with the hose installed (see Front Caliper Removal).
- Draw out the holder shaft pin [A], and take off the holder shaft [B].
- Remove the pad [C] from the holder shaft [D].
- Remove the other side pad [E].

Front Brake Pad Installation

- Push the caliper pistons in by hand as far as they will go.
- Install the pad spring in its correct position.
- Install the pad on the piston side first, then install the other side pad on the holder.
- Install the front caliper (see Front Caliper Installation).

⚠ WARNING

After servicing, it takes several applications of the brake lever before the brake pads contact the disc, which could result in increased stopping distance and cause an accident resulting in injury or death. Do not attempt to ride the motorcycle until a firm brake lever is obtained by pumping the lever until the pads are against the disc.

Rear Brake Pad Removal

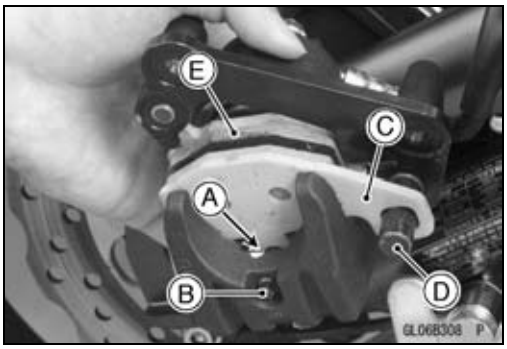

- Remove the rear caliper with the hose installed (see Rear Caliper Removal).
- Draw out the holder shaft pin [A], and take off the holder shaft [B].
- Remove the pad [C] from the holder shaft [D].
- Remove the other side pad [E].

Rear Brake Pad Installation

- Push the caliper piston in by hand as far as it will go.
- Install the pad spring in its correct position.
- Install the pad on the piston side first, then install the other side pad on the holder.
- Install the rear caliper (see Rear Caliper Installation).

⚠ WARNING

After servicing, it takes several applications of the brake pedal before the brake pads contact the disc, which could result in increased stopping distance and cause an accident resulting in injury or death. Do not attempt to ride the motorcycle until a firm brake pedal is obtained by pumping the pedal until the pads are against the disc.

Brake Pad Wear Inspection

- Refer to the Brake Pad Wear Inspection in the Periodic Maintenance chapter.

Master Cylinder

Front Master Cylinder Removal

- Disconnect the front brake light switch connectors [A].
- Loosen the banjo bolt [B], being careful not to spill brake fluid.
- Remove the banjo bolt and take off the brake hose from the master cylinder [C].

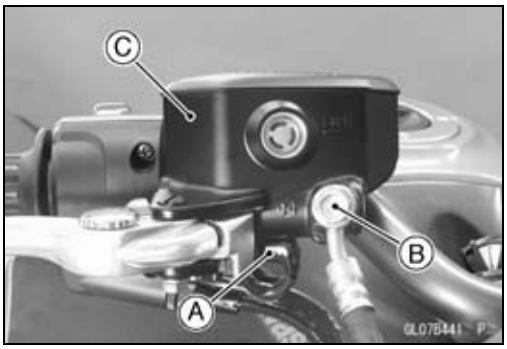

NOTICE
Immediately wipe up any brake fluid that spilled.

- Unscrew the front master cylinder clamp bolts [A], and take off the master cylinder [B] as an assembly with the reservoir, brake lever and brake switch installed.

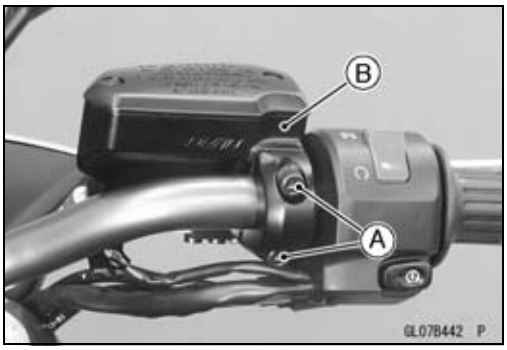

- Remove:
  Brake Lever Pivot Bolt [A] and Locknut [B]
  Brake Lever [C]
  Front Brake Light Switch Screw
  Front Brake Light Switch [D]

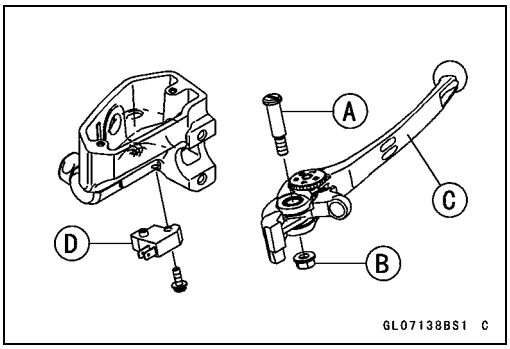

Front Master Cylinder Installation

- Apply silicone grease to the brake lever pivot bolt.
- Replace the brake lever pivot bolt locknut with a new one.
- Install:
  Front Brake Light Switch
  Front Brake Light Switch Screw
  Brake Lever
  Brake Lever Pivot Bolt and Locknut
- Tighten:

Torque - Front Brake Light Switch Screw: 1.2 N·m (0.12 kgf·m, 11 in·lb)
Brake Lever Pivot Bolt: 1.0 N·m (0.10 kgf·m, 9 in·lb)
Brake Lever Pivot Bolt Locknut: 5.9 N·m (0.60 kgf·m, 52 in·lb)

Master Cylinder

- Install the front master cylinder.
  - ○Align the punch mark [A] on the handlebar with the mating surface [B] of the master cylinder clamp.
- Tighten the upper clamp bolt [C] first, and then the lower clamp bolt [D]. There will be a gap at the lower part of the clamp after tightening.

  Torque - Front Master Cylinder Clamp Bolts: 11 N·m (1.1 kgf·m, 97 in·lb)
- Connect the front brake light switch connectors.

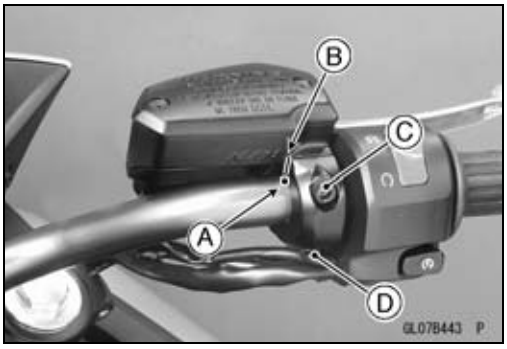

- Replace the washers [A] on each side of the hose fitting [B] with new ones.
- Install the brake hose upper end.
- Tighten:

  Torque - Brake Hose Banjo Bolt: 25 N·m (2.5 kgf·m, 18 ft·lb)
- Bleed the brake line (see Brake Line Bleeding).
- Check the fluid level in the brake reservoirs (see Brake Fluid Level Inspection in the Periodic Maintenance chapter).
- Check the brake for good braking power, no brake drag, and no fluid leakage.

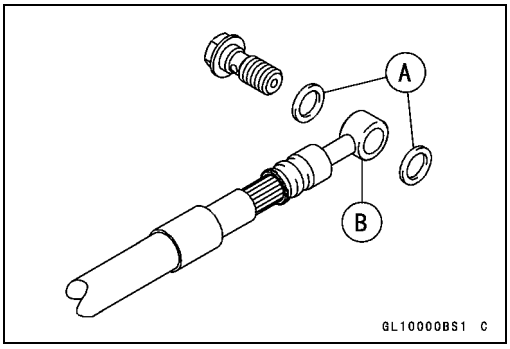

⚠ WARNING

After servicing, it takes several applications of the brake lever or pedal before the brake pads contact the disc, which could result in increased stopping distance and cause an accident resulting in injury or death. Do not attempt to ride the motorcycle until a firm brake lever or pedal is obtained by pumping the lever or pedal until the pads are against the disc.

Rear Master Cylinder Removal

- Loosen the banjo bolt [A], being careful not to spill brake fluid.
- Remove the banjo bolt and take off the brake hose from the master cylinder [B].

NOTICE

Immediately wipe up any brake fluid that spilled.

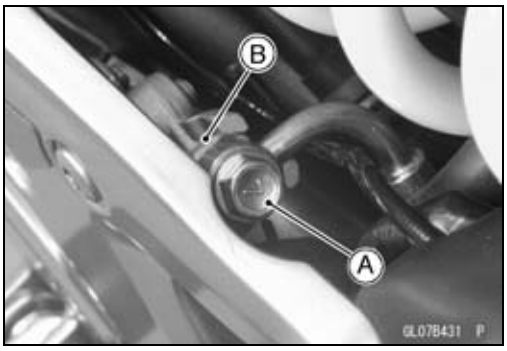

- Loosen the rear master cylinder mounting bolts [A].
- Remove the right footpeg stay bolts [B] and move the right footpeg stay [C] aside.

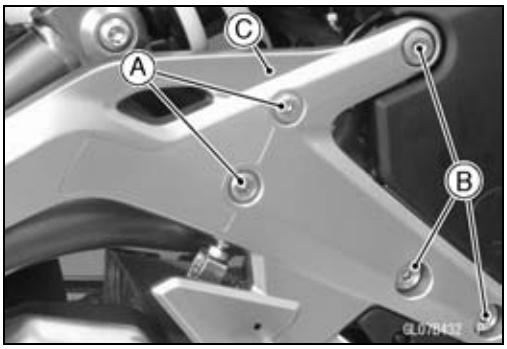

Master Cylinder

- Remove the cotter pin [A].
- Pull off the joint pin [B] while pressing down the brake pedal.
- Pull off the reservoir hose lower end, and drain the brake fluid into a container.
- Remove the rear master cylinder.

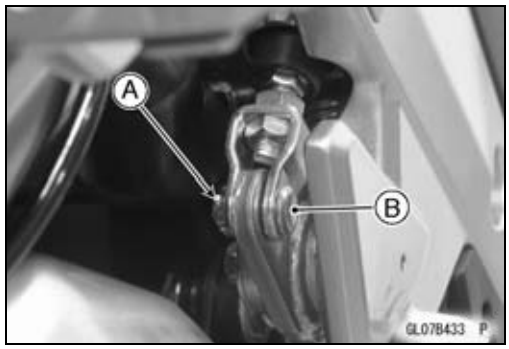

Rear Master Cylinder Installation

- Install the joint pin [A].
- Replace the cotter pin [B] with a new one.
- Insert the cotter pin and bend the pin ends as shown.

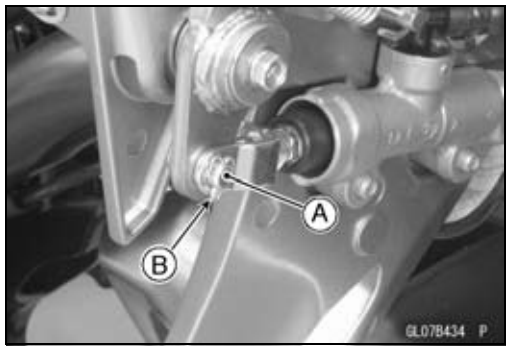

- Replace the washers [A] on each side of the hose fitting [B] with new ones.
- Install the brake hose lower end.
- Tighten:

  Torque - Brake Hose Banjo Bolt: 25 N·m (2.5 kgf·m, 18 ft·lb)
- Install the rear master cylinder.

  Torque - Rear Master Cylinder Mounting Bolts: 25 N·m (2.5 kgf·m, 18 ft·lb)
- Bleed the brake line (see Brake Line Bleeding).
- Check the fluid level in the brake reservoirs (see Brake Fluid Level Inspection in the Periodic Maintenance chapter).
- Check the brake for good braking power, no brake drag, and no fluid leakage.

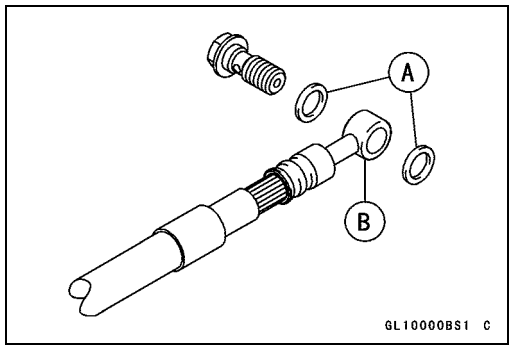

⚠ WARNING

After servicing, it takes several applications of the brake lever or pedal before the brake pads contact the disc, which could result in increased stopping distance and cause an accident resulting in injury or death. Do not attempt to ride the motorcycle until a firm brake lever or pedal is obtained by pumping the lever or pedal until the pads are against the disc.

Master Cylinder Disassembly

- Refer to the Master Cylinder Rubber Parts Replacement in the Periodic Maintenance chapter.

Master Cylinder Assembly

- Refer to the Master Cylinder Rubber Parts Replacement in the Periodic Maintenance chapter.

Master Cylinder

Master Cylinder Inspection

- Remove the master cylinders (see Front/Rear Master Cylinder Removal).
- Disassemble the front and rear master cylinders (see Master Cylinder Disassembly).
- Check that there are no scratches, rust or pitting on the inner wall [A] of each master cylinder and on the outside of each piston [B].

★If a master cylinder or piston shows any damage, replace them.

- Inspect the primary cup [C] and secondary cup [D].

★If a cup is worn, damaged softened (rotted), or swollen, the piston assembly should be replaced to renew the cups.

★If fluid leakage is noted at the brake lever, the piston assembly should be replaced to renew the cups.

- Check the dust covers [E] for damage.

★If they are damaged, replace them.

- Check the piston return springs [F] for any damage.

★If the springs are damaged, replace them.

- Check that relief port [G] and supply port [H] are not plugged.

★If the relief port becomes plugged, the brake pads will drag on the disc. Blow the ports clean with compressed air.

Front Master Cylinder [J]
Rear Master Cylinder [K]

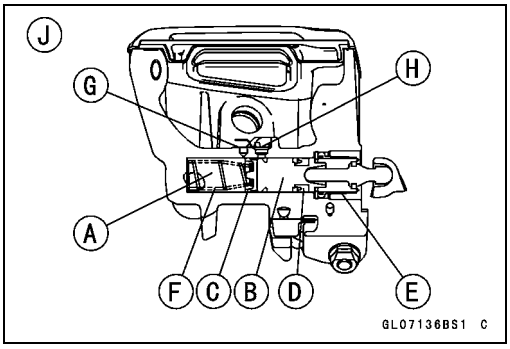

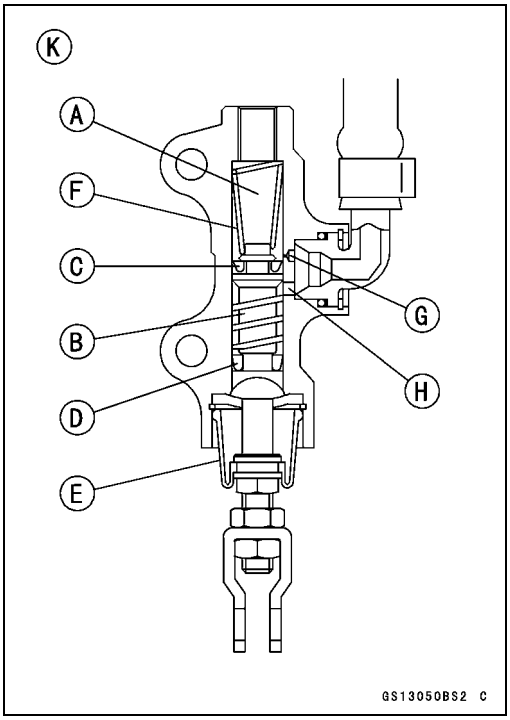

Brake Disc

Brake Disc Removal

- Remove the wheel (see Front/Rear Wheel Removal in the Wheels/Tires chapter).
- Unscrew the mounting bolts [A], and take off the disc [B].
- For front brake disc, remove the gaskets.

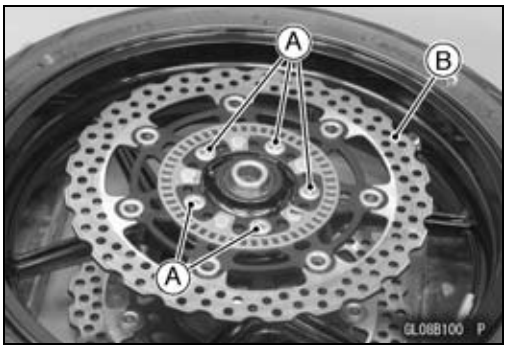

Brake Disc Installation

- For front brake disc, replace the gaskets with new ones.
- Install the brake disc on the wheel so that the marked [A] side faces out.
- Apply a non-permanent locking agent to the threads of the front and rear brake disc mounting bolts.
- Tighten:

Torque - Brake Disc Mounting Bolts: 27 N·m (2.8 kgf·m, 20 ft·lb)

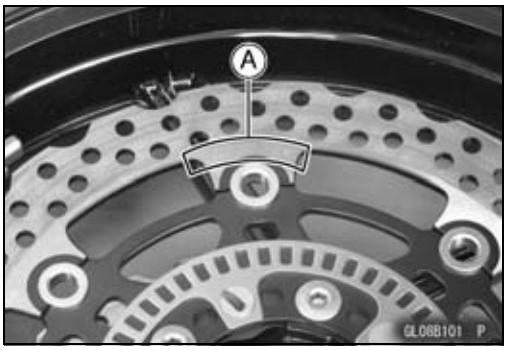

Brake Disc Wear Inspection

- Measure the thickness of each disc at the point where it has worn the most.

★If the disc has worn past the service limit, replace it.

Measuring Area [A]

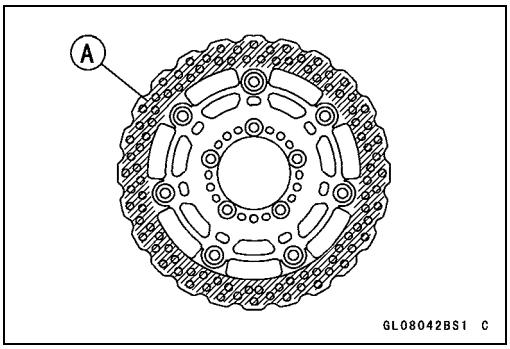

Disc Thickness

Standard:	
Front	**4.8 ~ 5.2 mm (0.19 ~ 0.20 in.)**
Rear	**4.8 ~ 5.2 mm (0.19 ~ 0.20 in.)**
Service Limit:	
Front	**4.5 mm (0.18 in.)**
Rear	**4.5 mm (0.18 in.)**

Brake Disc Warp Inspection

- Raise the wheel off the ground (see Front/Rear Wheel Removal in the Wheels/Tires chapter).

○For front disc inspection, turn the handlebar fully to one side.

- Set up a dial gauge against the disc [A] as shown and measure disc runout, while turning [B] the wheel by hand.

★If runout exceeds the service limit, replace the disc.

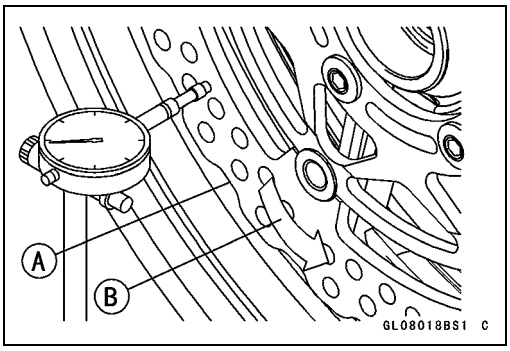

Disc Runout

Standard:	**TIR 0.15 mm (0.0059 in.) or less**
Service Limit:	**TIR 0.3 mm (0.01 in.)**

Brake Fluid

Brake Fluid Level Inspection

- Refer to the Brake Fluid Level Inspection in the Periodic Maintenance chapter.

Brake Fluid Change

- Refer to the Brake Fluid Change in the Periodic Maintenance chapter.

Brake Line Bleeding

The brake fluid has a very low compression coefficient so that almost all the movement of the brake lever or pedal is transmitted directly to the caliper for braking action. Air, however, is easily compressed. When air enters the brake lines, brake lever or pedal movement will be partially used in compressing the air. This will make the lever or pedal feel spongy, and there will be a loss in braking power.

⚠ WARNING

Air in the brake lines diminish braking performance and can cause an accident resulting in injury or death. If the brake lever or pedal has a soft or "spongy" feeling mushy when it is applied, there might be air in the brake lines or the brake may be defective. Do not operate the vehicle and service the brake system immediately.

NOTE

○*The procedure to bleed the front brake line is as follows. Bleeding the rear brake line is the same as for the front brake.*

- Remove the reservoir cap and diaphragm.
- Fill the reservoir with fresh brake fluid to the upper level line [A].
- Slowly pump the brake lever several times until no air bubbles can be seen rising up through the fluid from the holes at the bottom of the reservoir.

○Bleed the air completely from the master cylinder by this operation.

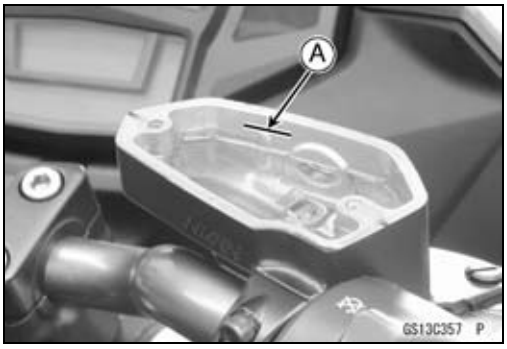

- Remove the rubber cap [A] on the caliper.
- Attach a clear plastic hose [B] to the bleed valve [C], and run the other end of the hose into a container.

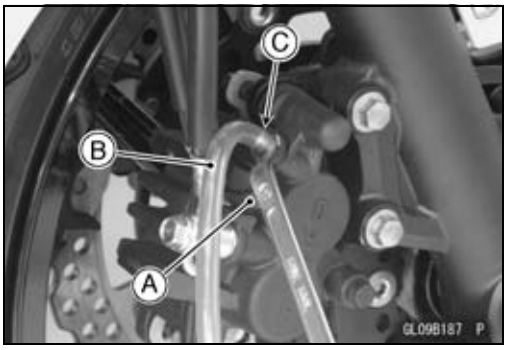

Brake Fluid

- Bleed the brake line and the caliper.

○Repeat this operation until no more air can be seen coming out into the plastic hose.

1. Pump the brake lever until it becomes hard, and apply the brake and hold it [A].
2. Quickly open and close [B] the bleed valve while holding the brake applied.
3. Release the brake [C].

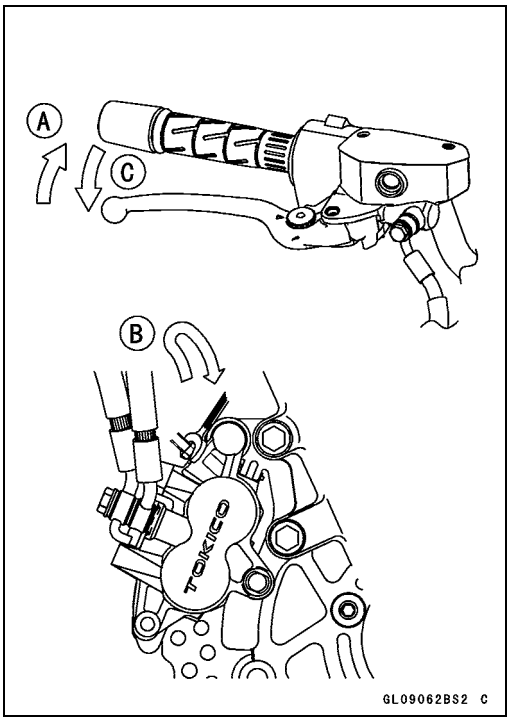

NOTE

○*The fluid level must be checked often during the bleeding operation and replenished with fresh brake fluid as necessary. If the fluid in the reservoir runs completely out any time during bleeding, the bleeding operation must be done over again from the beginning since air will have entered the line.*

○*Tap the brake hose lightly from the caliper to the reservoir for more complete bleeding.*

○*Front Brake: First bleeding the right caliper then repeat the above steps for the left caliper.*

- Remove the clear plastic hose.
- Install the diaphragm and reservoir cap.
- Tighten:

Torque - Front Brake Reservoir Cap Screws: 1.5 N·m (0.15 kgf·m, 13 in·lb)

- For rear brake, follow the procedure below to install the rear reservoir cap correctly.

○First, tighten the rear brake fluid reservoir cap [B] clockwise [C] by hand until slight resistance is felt indicating that the cap is seated on the reservoir body, then tighten the cap an additional 1/6 turn [D] while holding the brake fluid reservoir body [A].

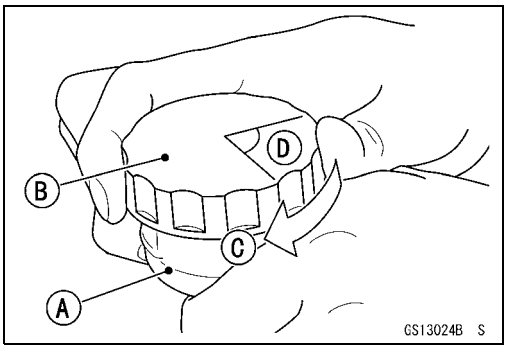

- Tighten the bleed valve, and install the rubber cap.

Torque - Caliper Bleed Valve: 7.8 N·m (0.80 kgf·m, 69 in·lb)

- Check the fluid level in the brake reservoirs (see Brake Fluid Level Inspection in the Periodic Maintenance chapter).
- After bleeding is done, check the brake for good braking power, no brake drag, and no fluid leakage.

Brake Fluid

⚠ WARNING

When working with the disc brake, observe the precautions listed below.

1. Never reuse old brake fluid.
2. Do not use fluid from a container that has been left unsealed or that has been open for a long time.
3. Do not mix two types and brands of fluid for use in the brake. This lowers the brake fluid boiling point and could cause the brake to be ineffective. It may also cause the rubber brake parts to deteriorate.
4. Don't leave the reservoir cap off for any length of time to avoid moisture contamination of the fluid.
5. Don't change the fluid in the rain or when a strong wind is blowing.
6. Except for the disc pads and disc, use only disc brake fluid, isopropyl alcohol, or ethyl alcohol for cleaning of the brake parts. Do not use any other fluid for cleaning these parts. Gasoline, engine oil, or any other petroleum distillate will cause deterioration of the rubber parts. Oil spilled on any part will be difficult to wash off completely and will eventually deteriorate the rubber used in the disc brake.
7. When handling the disc pads or disc, be careful that no disc brake fluid or any oil gets on them. Clean off any fluid or oil that inadvertently gets on the pads or disc with a high flash-point solvent. Do not use one which will leave an oily residue. Replace the pads with new ones if they cannot be cleaned satisfactorily.
8. Brake fluid quickly ruins painted surfaces; any spilled fluid should be completely wiped up immediately.
9. If any of the brake line fittings or the bleed valve is opened at any time, the **AIR MUST BE BLED FROM THE BRAKE LINE.**

Brake Hose

Brake Hose Removal/Installation

- Refer to the Brake Hose and Pipe Replacement in the Periodic Maintenance chapter.

Brake Hose Inspection

- Refer to the Brake Hose Damage and Installation Condition Inspection in the Periodic Maintenance chapter.

Anti-Lock Brake System (Equipped Models)

Parts Location

Front Wheel Rotation Sensor [A]
Front Wheel Rotation Sensor Rotor [B]

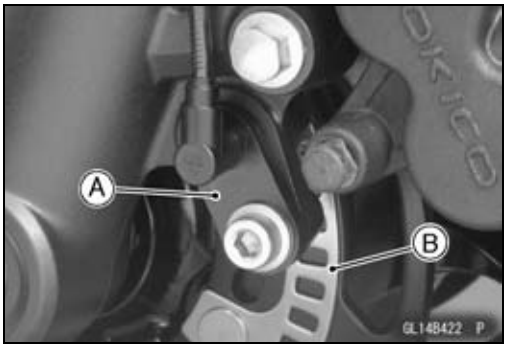

Rear Wheel Rotation Sensor [A]
Rear Wheel Rotation Sensor Rotor [B]

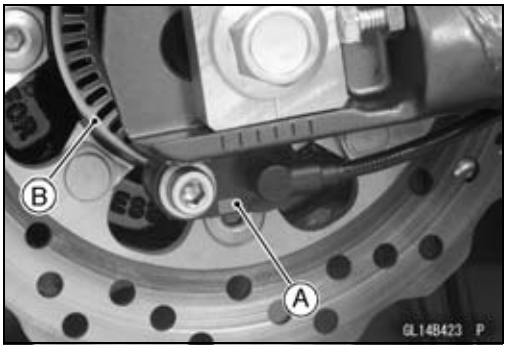

Yellow ABS Indicator Light (LED) [A]

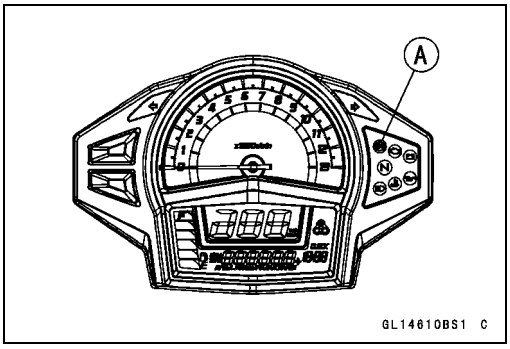

ABS Hydraulic Unit [A]

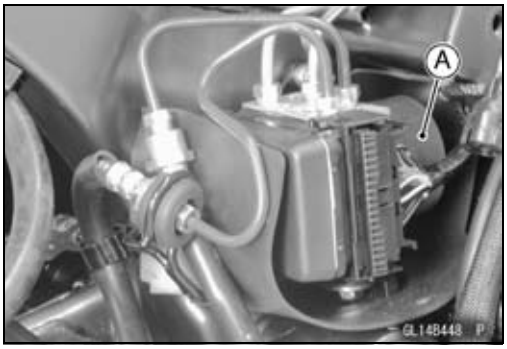

ABS Solenoid Valve Relay Fuse 15 A [A]
ABS Motor Relay Fuse 25 A [B]

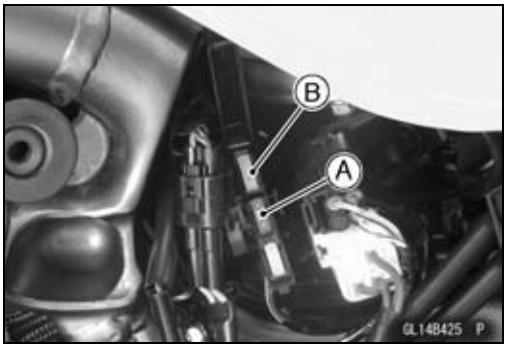

Anti-Lock Brake System (Equipped Models)

ABS Kawasaki Diagnostic System Connector [A]
ABS Self-diagnosis Terminal [B]

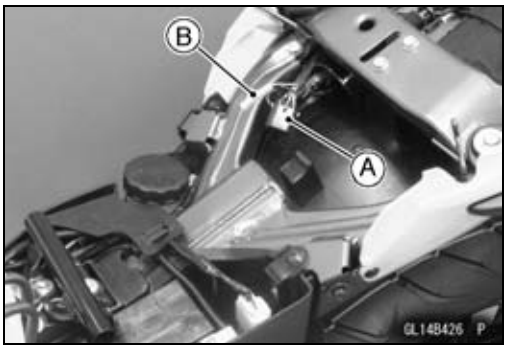

Anti-Lock Brake System (Equipped Models)

ABS System Wiring Diagram

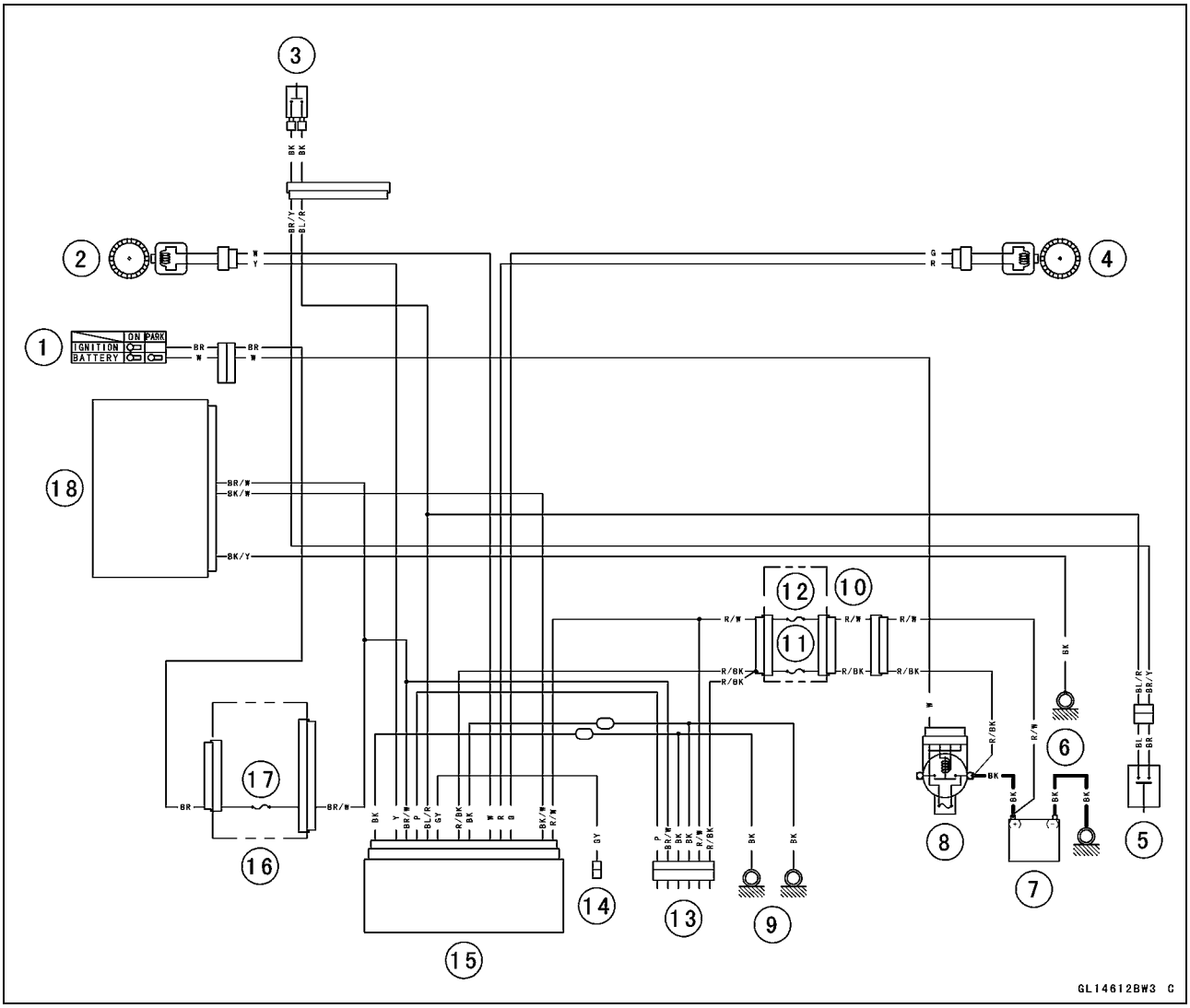

1. Ignition Switch
2. Front Wheel Rotation Sensor
3. Front Brake Light Switch
4. Rear Wheel Rotation Sensor
5. Rear Brake Light Switch
6. Frame Ground
7. Battery 12 V 10 Ah
8. Main Fuse 30 A
9. Frame Ground
10. Fuse Box
11. ABS Solenoid Valve Relay Fuse 15 A
12. ABS Motor Relay Fuse 25 A
13. ABS Kawasaki Diagnostic System Connector
14. ABS Self-diagnosis Terminal
15. ABS Hydraulic Unit
16. Fuse Box
17. Ignition Fuse 10 A
18. Meter Unit

○Color Codes:

BK: Black	GY: Gray	R: Red
BL: Blue	O: Orange	W: White
BR: Brown	P: Pink	Y: Yellow
G: Green		

Anti-Lock Brake System (Equipped Models)

Terminal Names

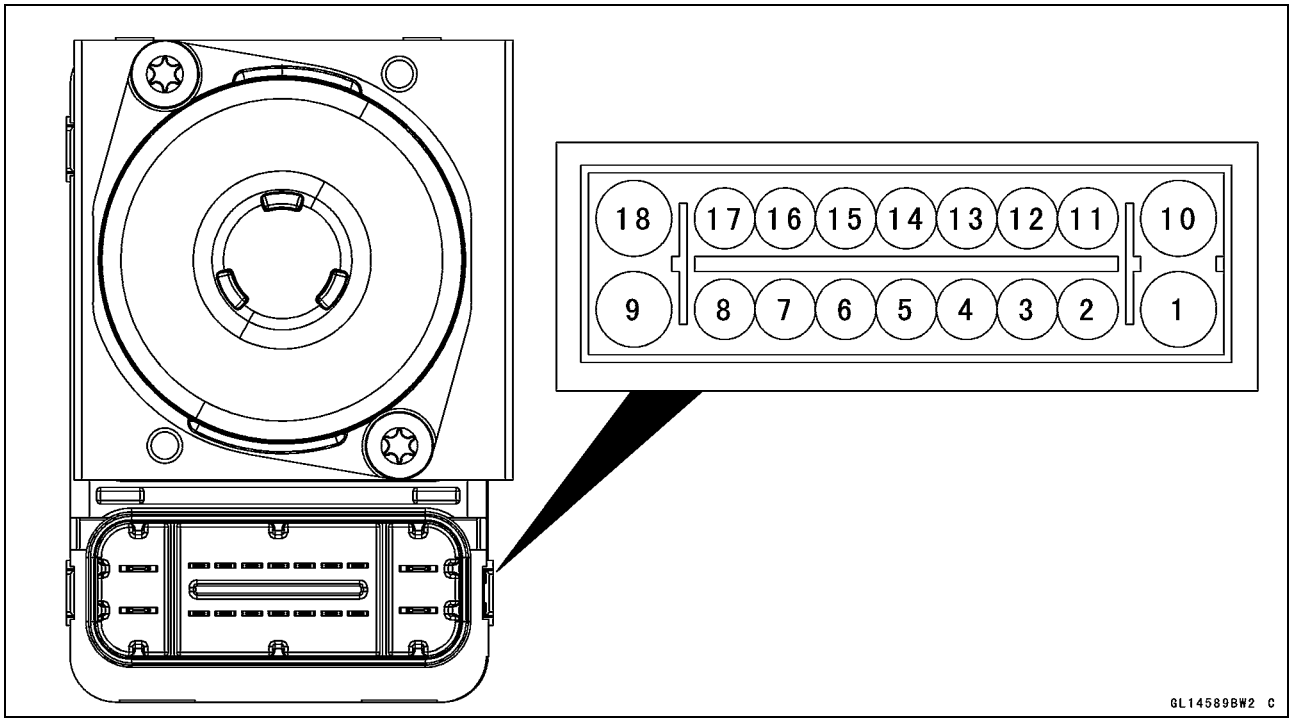

1. Ground
2. Unused
3. Front Wheel Rotation Sensor Signal
4. Power Supply
5. ABS Kawasaki Diagnostic System Terminal
6. Front/Rear Brake Light Switch
7. ABS Self-diagnosis Terminal
8. Unused
9. Power Supply to ABS Solenoid Valve Relay
10. Ground to Motor
11. Unused
12. Power Supply to Front Wheel Rotation Sensor
13. Power Supply to Rear Wheel Rotation Sensor
14. Rear Wheel Rotation Sensor Signal
15. Unused
16. Unused
17. Yellow ABS Indicator Light (LED)
18. Power Supply to ABS Motor Relay

Anti-Lock Brake System (Equipped Models)

ABS Servicing Precautions

There are a number of important precautions that should be followed servicing the ABS system.

- This ABS system is designed to be used with a 12 V sealed battery as its power source. Do not use any other battery except for a 12 V sealed battery as a power source.
- Do not reverse the battery cable connections. This will damage the ABS hydraulic unit.
- To prevent damage to the ABS parts, do not disconnect the battery cables or any other electrical connections when the ignition switch is ON or while the engine is running.
- Take care not to short the leads that are directly connected to the battery positive (+) terminal to the chassis ground.
- Do not turn the ignition switch to ON while any of the ABS electrical connectors are disconnected. The ABS hydraulic unit memorizes service codes.
- Do not spray water on the electrical parts, ABS parts, connectors, leads and wiring.
- If a transceiver is installed on the motorcycle, make sure that the operation of the ABS system is not influenced by electric wave radiated from the antenna. Locate the antenna as far as possible away from the ABS hydraulic unit.
- Whenever the ABS electrical connections are to be disconnected, first turn the ignition switch to OFF.
- The ABS parts should never be struck sharply, as with a hammer, or allowed to fall on a hard surface. Such a shock to the parts can damage them.
- The ABS parts cannot be disassembled. Even if a fault is found, do not try to disassemble and repair the ABS parts, replace it.
- The ABS has many brake lines, pipes, and leads. And the ABS cannot detect problems with the conventional braking system (brake disc wear, unevenly worn brake pad, and other mechanical faults). To prevent trouble, check the brake lines and pipes for correct routing and connection, the wiring for correct routing, and the brakes for proper braking power. Be sure to check for fluid leakage, and bleed the brake line thoroughly.

Anti-Lock Brake System (Equipped Models)

⚠ WARNING

Air in the brake lines diminish braking performance and can cause an accident resulting in injury or death. If any of the brake line fittings, including the ABS hydraulic unit joint nuts, or the bleed valve is opened at any time, the air must be bled completely from the brake line. If the brake lever has a soft or "spongy" feeling mushy when it is applied, there might be air in the brake lines or the brake may be defective. Do not operate the vehicle and service the brake system immediately.

NOTICE

Do not ride the motorcycle with air in the brake line, or the ABS could malfunction.

○The yellow ABS indicator light (LED) [A] may go on if the tire pressure is incorrect, a non-recommended tire is installed, or the wheel is deformed. If the warning indicator light goes on, remedy the problem and clear the service code.

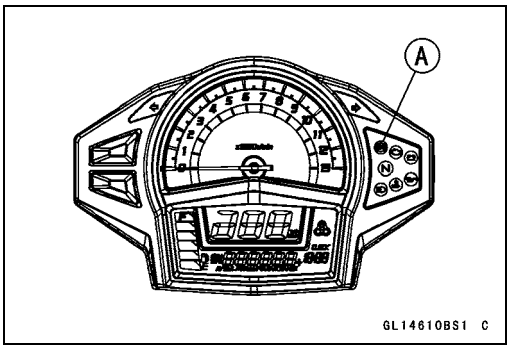

⚠ WARNING

Use of non-recommended tires may cause malfunctioning of ABS and can lead to extended braking distance resulting in an accident causing serious injury or death. Always use recommended standard tires for this motorcycle.

Anti-Lock Brake System (Equipped Models)

- The yellow ABS indicator light (LED) may go on if the engine is run with the motorcycle on its stand and the transmission in gear. If the warning indicator light goes on, just turn the ignition switch to OFF, then clear service code 42, which indicates a “Faulty front wheel rotation sensor”.
- When the ABS operates, the ABS makes noise and the rider feels the reaction force on the brake lever and brake pedal. This is a normal condition. It informs the rider that the ABS is operating normally.
- Service codes detected once by the ABS hydraulic unit will be memorized in the ABS hydraulic unit. Therefore, after maintenance work is finished, be sure to erase the service codes. Do not erase the service codes during troubleshooting. Wait until all the checks and repair work are finished to prevent duplication of previous service codes and unnecessary maintenance work.
- Before delivering the motorcycle to the customer, be sure to erase any service codes which might be stored in the ABS hydraulic unit. Using the self-diagnosis feature, make sure that only start code 12 is shown. A fully charged battery is a must for conducting reliable self-diagnosis. Test run the motorcycle at a speed of more than 20 km/h (12 mph) to see that the yellow ABS indicator light (LED) does not go on. Finally, test run the motorcycle at a speed of more than 30 km/h (20 mph) and brake suddenly to see that the motorcycle stops without loss of steering control and the ABS operates normally (The reaction force generated is felt in the brake lever and pedal.). This completes the final inspection.

ABS Troubleshooting Outline

When an abnormality in the system occurs, the yellow ABS indicator light (LED) goes on to alert the rider. In addition, the nature of the fault is stored in the memory of the ABS hydraulic unit and when in the self-diagnosis mode, the service code [A] is indicated by the number of times the yellow ABS indicator light (LED) blinks. The service codes stored in memory are not erased until the mode has been changed to the fault erase mode after the fault has been corrected. Therefore, after correcting the problem, always erase the service codes and then run the self-diagnosis program to confirm normal signal output. When, due to a malfunction, the yellow ABS indicator light (LED) stays on, get a thorough understanding of the background before starting the repair work. Ask the rider about the conditions [B] under which the problem occurred and try to determine the cause [C]. Do not rely solely on the ABS self-diagnosis function, use common sense; check the brakes for proper braking power, and brake fluid level, search for leaks, etc.

If the yellow ABS indicator light (LED) blinks when the ignition switch is turned to ON or the motorcycle is running, ABS system does not function. In this case, the voltage of the battery is extremely low.

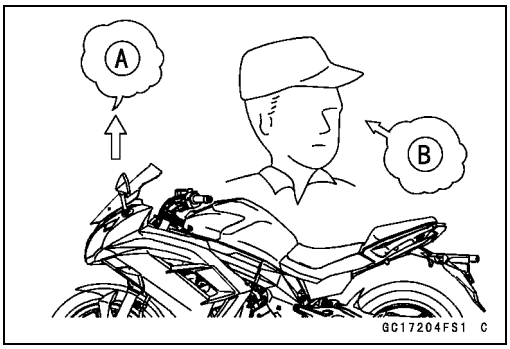

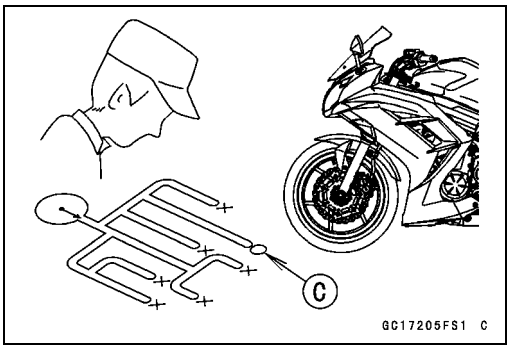

Anti-Lock Brake System (Equipped Models)

Even when the ABS is operating normally, the yellow ABS indicator light (LED) may go on under the conditions listed below. Turn the ignition switch to OFF to stop the yellow ABS indicator light (LED). If the motorcycle runs without erasing the service code, the yellow ABS indicator light (LED) may go on again.

○After continuous riding on a rough road.
○When the engine is started with the stand raised and the transmission engaged, and the rear wheel turns.
○When accelerating so abruptly that the front wheel leaves the ground.
○When the ABS has been subjected to strong electrical interference.
○When tire pressure is abnormal. Adjust tire pressure.
○When a tire different in size from the standard size is being used. Replace it with standard size.
○When the wheel is deformed. Replace the wheel.

Much of the ABS troubleshooting work consists of confirming continuity of the wiring. The ABS parts are assembled and adjusted by the manufacturer, so there is no need to disassemble or repair them. Replace the ABS hydraulic unit.

The basic troubleshooting procedures are listed below.

- Carry out pre-diagnosis inspections as a preliminary inspection.
- Determine the fault using the self-diagnosis function.
- Check wiring and connections from the ABS hydraulic unit connector to the suspected faulty ABS part, using the hand tester.

Special Tool - Hand Tester: 57001-1394

- Visually inspect the wiring for signs of burning or fraying.

★If any wiring is poor, replace the damaged wiring.

- Pull each connector [A] apart and inspect it for corrosion, dirt and damage.

★If the connector is corroded or dirty, clean it carefully. If it is damaged, replace it.

- Check the wiring for continuity.

○Use the wiring diagram to find the ends of the lead which is suspected of being a problem.
○Connect the hand tester between the ends of the leads.

Special Tool - Hand Tester: 57001-1394

○Set the tester to the × 1 Ω range, and read the tester.

★If the tester does not read 0 Ω, the lead is defective. Replace the main harness [B] if necessary.

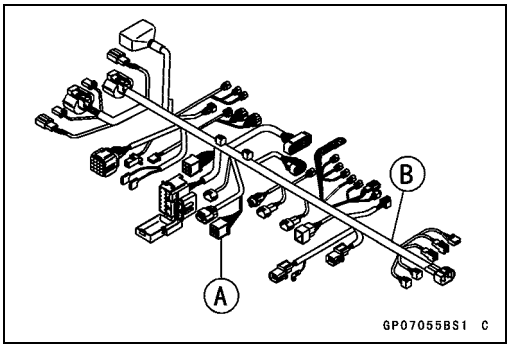

- Narrow down suspicious parts and close in on the faulty ABS part by repeating the continuity tests.

★If no abnormality is found in the wiring or connectors, the ABS parts are the next likely suspects. Check each part one by one.

★If an abnormality is found, replace the affected ABS part.

Anti-Lock Brake System (Equipped Models)

ABS Diagnosis Flow Chart

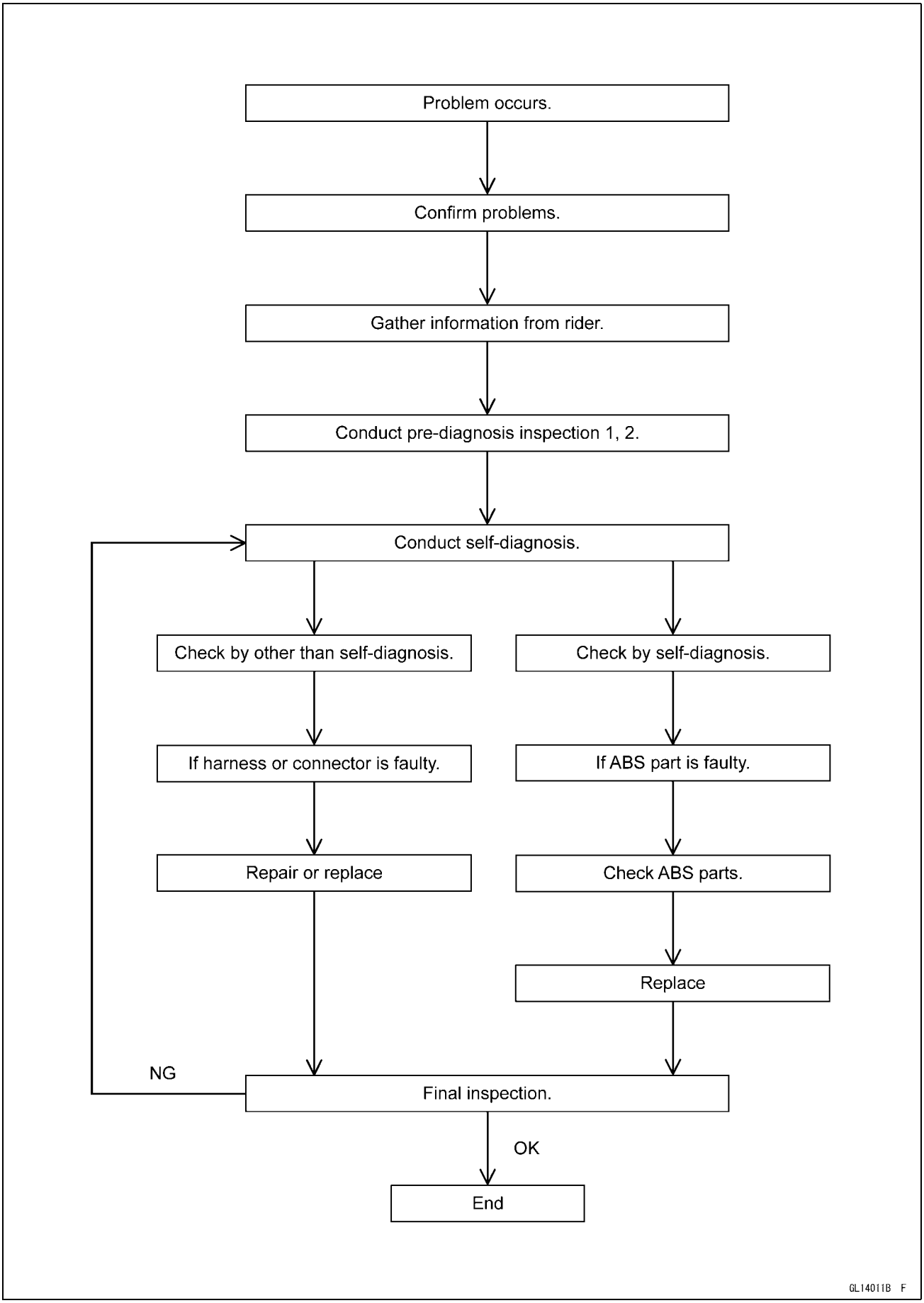

Anti-Lock Brake System (Equipped Models)

Inquiries to Rider

○Each rider reacts to problems in different ways, so it is important to confirm what kind of condition the rider is dissatisfied with.
○Try to find out exactly what problem occurs under exactly what conditions by asking the rider; knowing this information may help you reproduce the problem in the shop.
○The diagnosis sheet will help prevent you from overlooking any keys, so always use it.

Sample Diagnosis Sheet

Rider name:				Registration No. (license plate No.):			
Year of initial registration:				Model:			
Engine No.:				Frame No.:			
Date problem occurred:				Frequency:			
Weather:				Mileage:			
Phenomenon	☐ Brake lever vibration or noise	☐ Yellow ABS indicator light (LED) blinks	☐ Braking distance too long	☐ Abnormal brake lever movement	☐ ABS not working	☐ ABS works but yellow ABS indicator light (LED) doesn't go on	☐ ABS operating too frequently
	☐ Pedal vibration or noise	☐ Yellow ABS indicator light (LED) stays on		☐ Abnormal pedal movement			
Engine conditions at problem	☐ At start-up			☐ After starting		☐ At 5 000 r/min (rpm) or more	
Road conditions	☐ Slippery road ☐ Rough surface ☐ Other			(☐ snow,	☐ gravel,	☐ other)	
Driving conditions	☐ High-speed cornering ☐ Driving 10 km/h (6 mph) or above ☐ Driving below 10 km/h (6 mph) ☐ When stopping ☐ When turning						
Brake application	☐ Gradual ☐ Abrupt						
Other conditions	☐ Large brake lever stroke ☐ Large pedal stroke						

Anti-Lock Brake System (Equipped Models)

Pre-Diagnosis Inspection 1

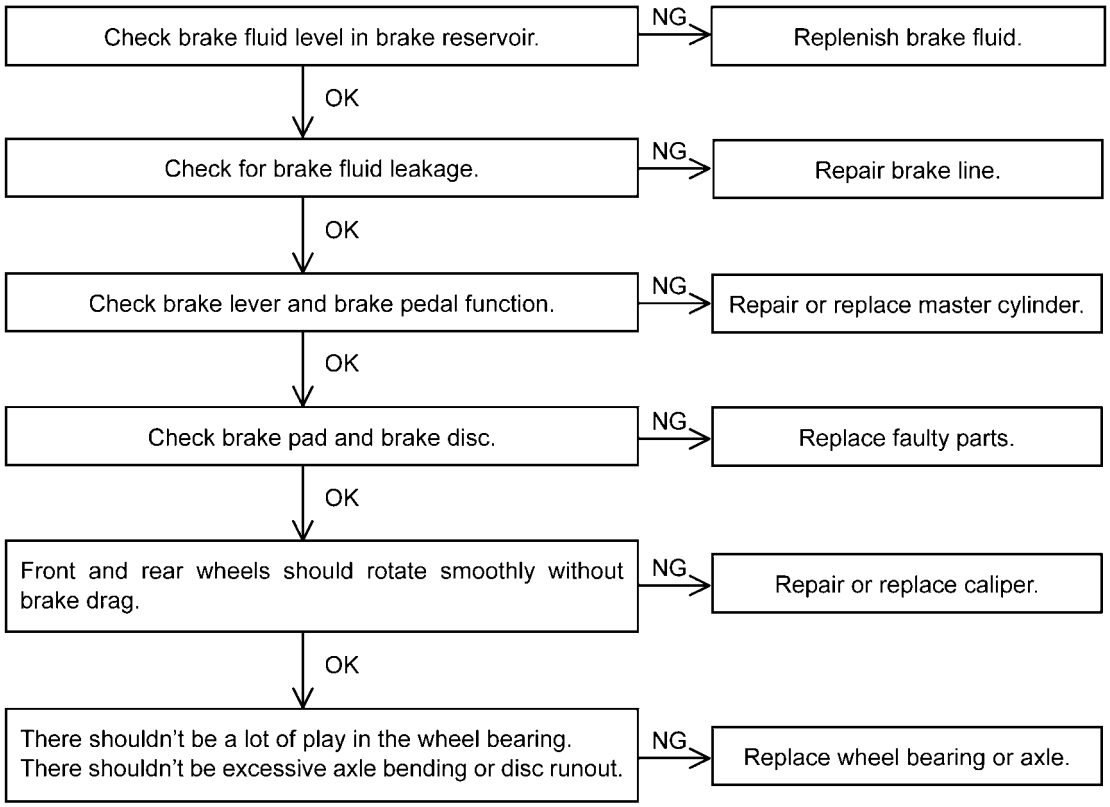

Anti-Lock Brake System (Equipped Models)

Pre-Diagnosis Inspection 2

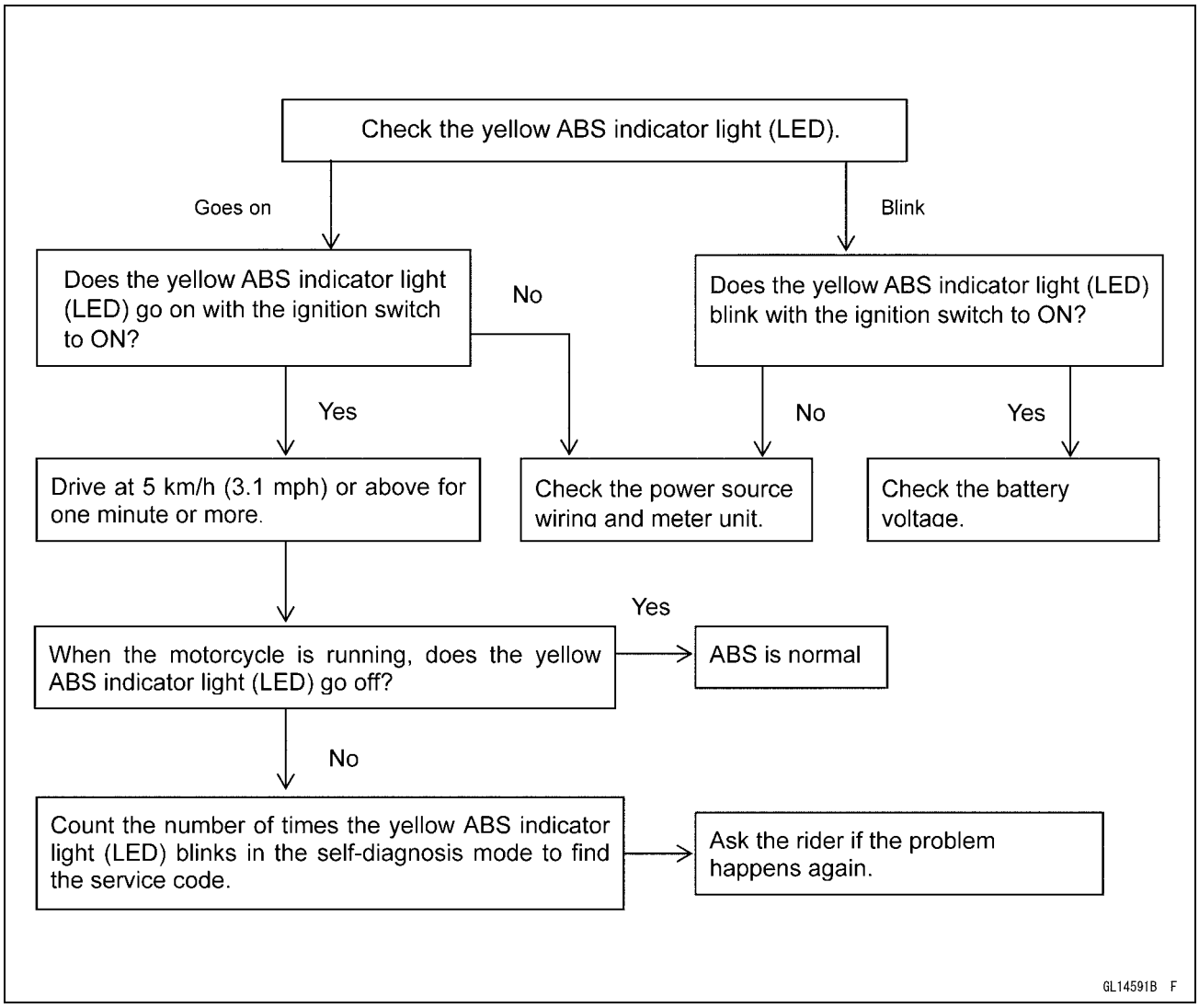

Self-diagnosis Outline

When the yellow ABS indicator light (LED) has blinked or goes on, the ABS hydraulic unit memorizes and stores the service code (15 codes including “Normal Code”) for the service person to troubleshoot easily. The service code memory is powered directly by the battery and cannot be canceled by the ignition switch.

The ABS hydraulic unit can memorize up to 6 service codes. Further service codes are memorized after erasing the preceding 6 service codes. If there is no fault, only the start code 12 is shown, indicating that “The ABS is normal”.

Self-diagnosis Procedures

○When a problem occurs with the ABS system, the yellow ABS indicator light (LED) [A] goes on.

NOTE

○*Use a fully charged battery when conducting self-diagnosis. Otherwise, the light blinks very slowly or does not blink.*

○*The motorcycle is stopped.*

○*Keep the self-diagnosis terminal grounded during self -diagnosis, with an auxiliary lead.*

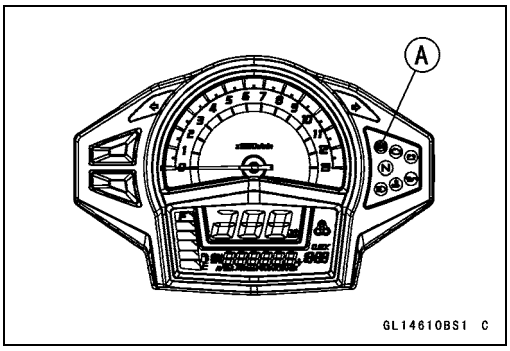

Anti-Lock Brake System (Equipped Models)

- Remove the front seat (see Front Seat Removal in the Frame chapter).
- Ground the self-diagnosis terminal [A] (Gray) to the battery (–) terminal or battery (–) cable connector, using a lead.
- Turn the ignition switch to ON.

○Count the blinks of the yellow ABS indicator light (LED) to read the service code. Keep the auxiliary lead ground until you finish reading the service code.

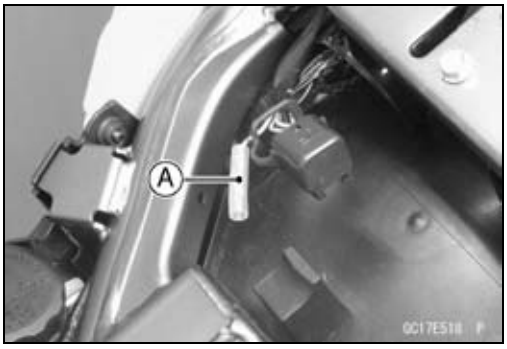

Service Code Clearing Procedures

- Start the service code erase mode with the following procedure.

○The erase mode starts when the ABS self-diagnosis terminal is disconnected from the ground terminal after starting the self-diagnosis mode.

○The service code can be erased by grounding and ungrounding (each time for at least 1 second) the ABS self -diagnosis terminal 3 times or more within about 12.5 seconds after starting the erase mode.

○The yellow ABS indicator light (LED) stays on during the erase mode and after erasing.

○Once erasing is finished, enter the self-diagnosis mode again to confirm that the service codes have been erased. If the ABS has been reset and all codes have been erased, only start code 12 will be shown.

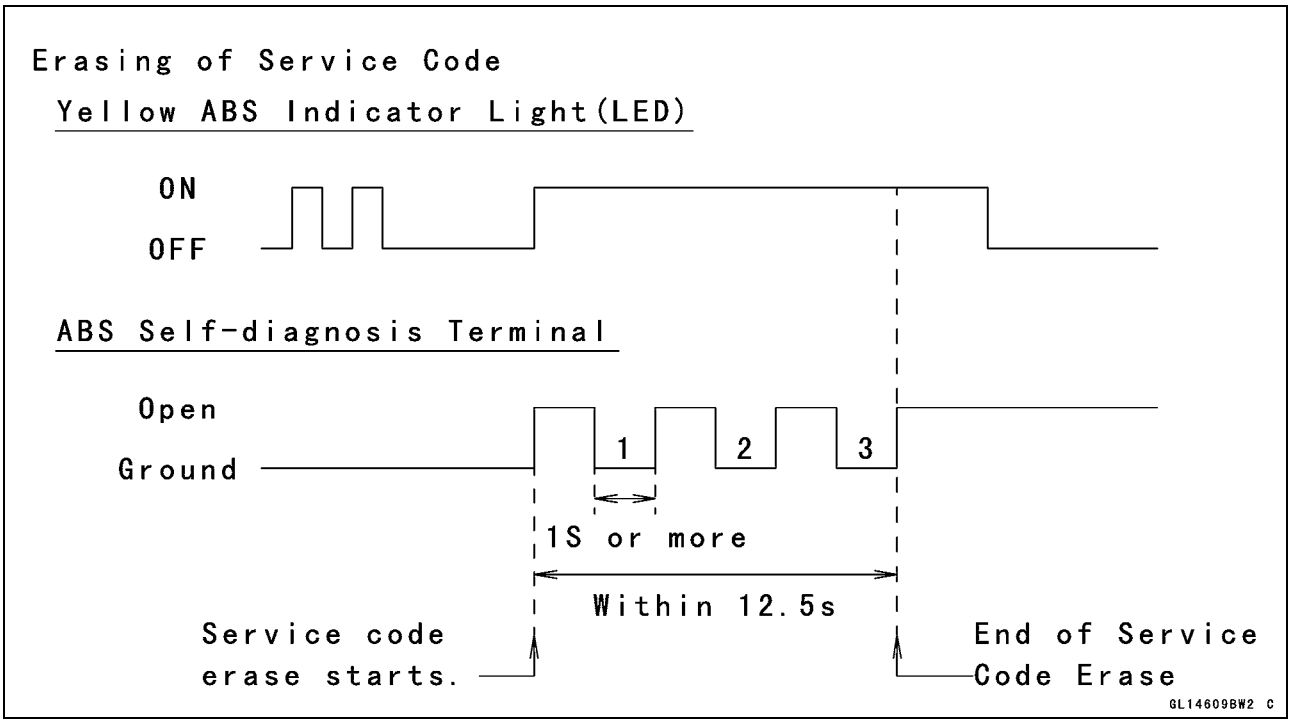

Anti-Lock Brake System (Equipped Models)

Self-diagnosis Flow Chart

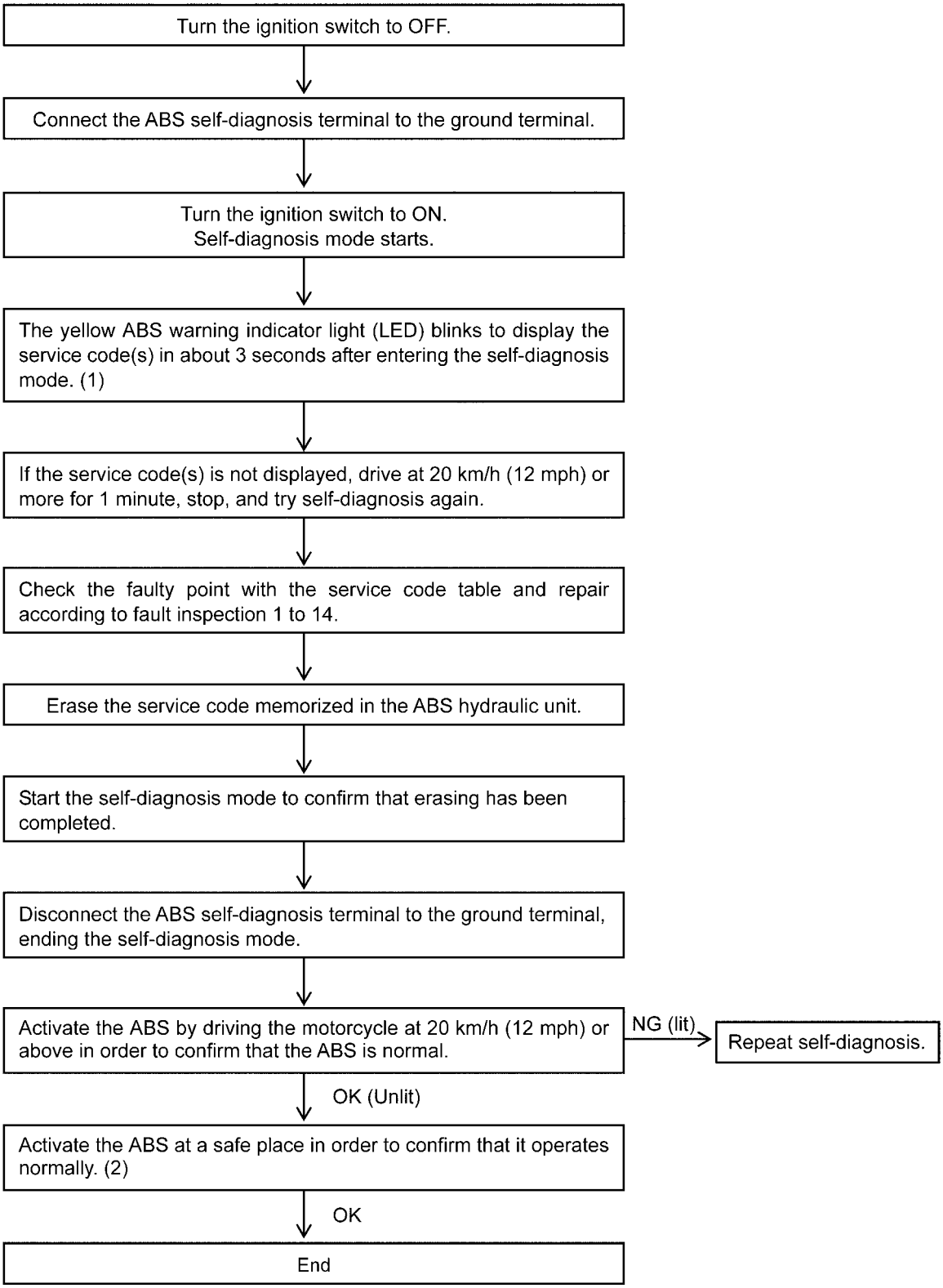

(1): The self-diagnosis mode continues for a maximum of 5 minutes, after which time it terminates. Self-diagnosis ends when either disconnect the ABS self-diagnosis terminal to the ground terminal after about 12.5 seconds in the self-diagnosis mode, or after executing the service code erase, or when the motorcycle is driven while in the self-diagnosis mode.

(2): Apply brake suddenly at 30 km/h (19 mph) or more to confirm that the motorcycle stops smoothly and steady with pulsation on the brake lever and pedal.

GL14593B F

Anti-Lock Brake System (Equipped Models)

How to Read Service Codes

○Service codes are shown by a series of long and short blinks of the yellow ABS indicator light (LED) as shown below.
○Read 10th digit and unit digit as the yellow ABS indicator light (LED) blinks.
○When there are a number of faults, a maximum of 6 service codes can be stored and the display will begin starting from the last service code entered.
○For the display pattern, first, start code 12 is shown, next up to 6 service codes starting with the last one stored, then the display is repeated from the start code once again.

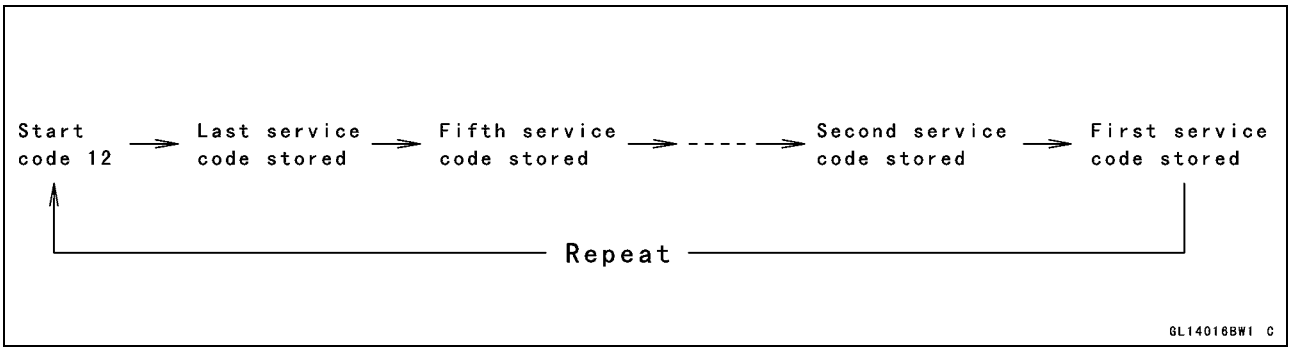

○If there is no fault, only the start code is shown.

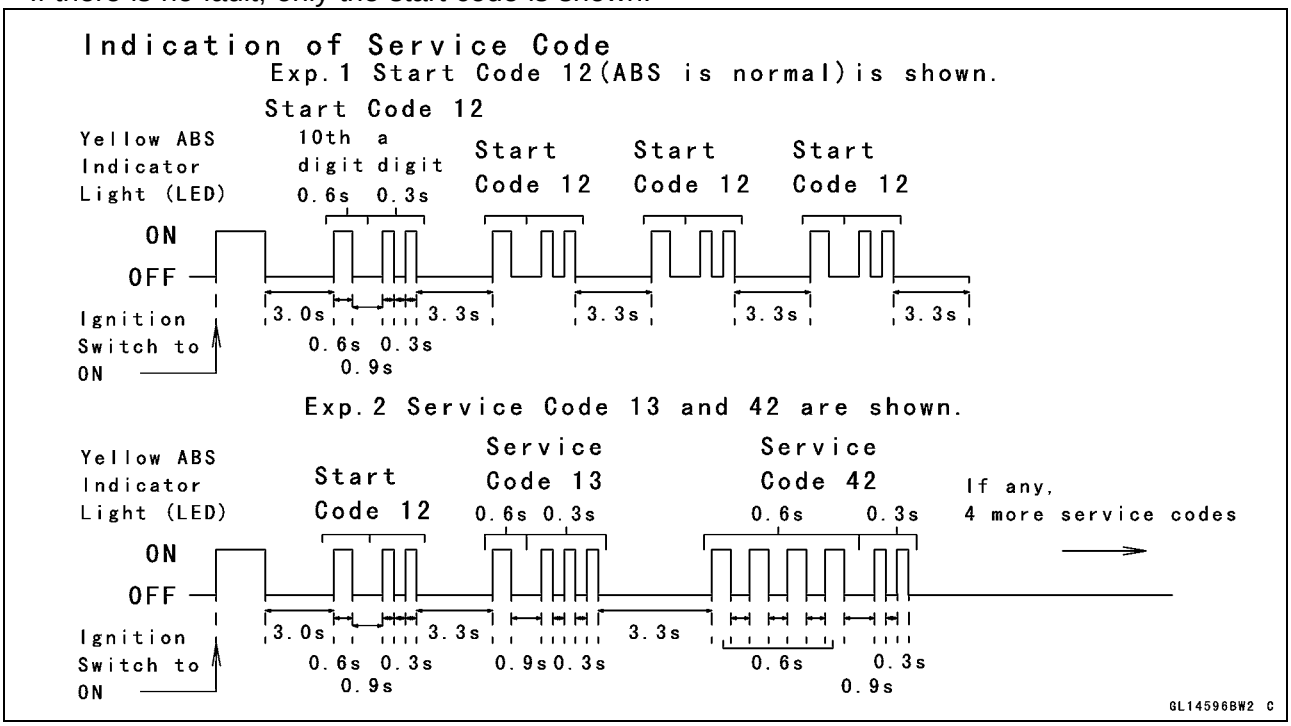

How to Erase Service Codes

○Even if the ignition switch is turned OFF, the battery or the ABS hydraulic unit are disconnected, all service codes remain in the ABS hydraulic unit.
○Refer to the Service Code Clearing Procedure for the service code erasure.

Anti-Lock Brake System (Equipped Models)

Service Code Table

Service Code	Yellow ABS Indicator Light (LED)	Problems	Light State
12	ON OFF	Start code (not fault)	After starts, turn off
13		Rear intake solenoid valve trouble (open, temperature abnormal)	ON
14		Rear outlet solenoid valve trouble (open, temperature abnormal)	ON
17		Front intake solenoid valve trouble (open, temperature abnormal)	ON
18		Front outlet solenoid valve trouble (open, temperature abnormal)	ON
19		ABS solenoid valve relay trouble (wiring shorted or open, stuck relay (ON or OFF) or dropout)	ON
25		Front, rear wheel rotation difference abnormal (substandard tire, sensor rotor teeth number wrong)	ON
35		ABS motor relay trouble (wiring shorted or open, stuck relay (ON or OFF)	ON
42		Front wheel rotation sensor signal abnormal (sensor or rotor missing, too large clearance, rotor tooth worn or missing)	ON
43		Front wheel rotation sensor wiring (wiring shorted or open, connector bad connection)	ON
44		Rear wheel rotation sensor signal abnormal (sensor or rotor missing, too large clearance, rotor tooth worn or missing)	ON
45		Rear wheel rotation sensor wiring (wiring shorted or open, connector bad connection)	ON
52		Power supply voltage abnormal (under-voltage)	ON
53		Power supply voltage abnormal (over-voltage)	ON
55		ECU trouble (ECU operation abnormal)	ON

Anti-Lock Brake System (Equipped Models)

Yellow ABS Indicator Light (LED) Inspection

● Turn the ignition switch to ON.

★If the yellow ABS indicator light (LED) [A] goes on, it is normal.

★If the yellow ABS indicator light (LED) does not go on, go to step “Yellow ABS Indicator Light (LED) does not go on (When the Ignition Switch turned to ON)”.

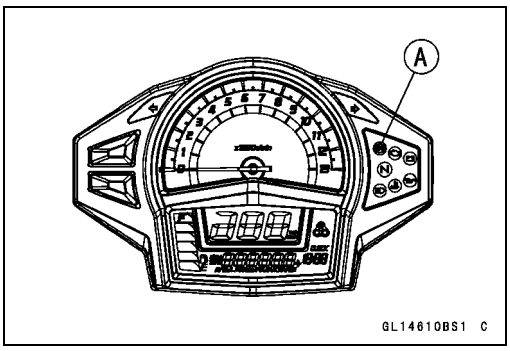

● Turn the ignition switch to OFF.

★If the yellow ABS indicator light (LED) [A] does not go on, it is normal.

★If the yellow ABS indicator light (LED) goes on, go to step “Yellow ABS Indicator Light (LED) goes on (When the Motorcycle is Running, - No Service Code)”.

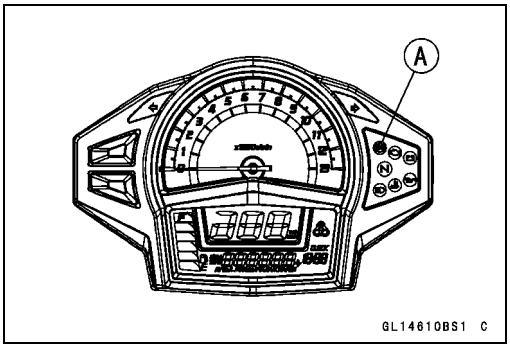

Yellow ABS Indicator Light (LED) does not go on (When the Ignition Switch turned to ON)

● Disconnect the meter unit connector (see Meter Unit Removal in the Electrical System chapter).

● Do the 1st step test as follows.

○Check the terminal voltage between the black/white lead terminal of the meter unit connector [A] and ground.

[9] Yellow ABS Indicator Light (LED)

[15] Ground (–)

Special Tool - Hand Tester: 57001-1394

Needle Adapter: 57001-1457

○Turn the ignition switch to ON.

Terminal Voltage

Standard: About 8 V

★If the terminal voltage is not within the specification, go to the 2nd step.

★If the terminal voltage is correct, replace the meter assembly.

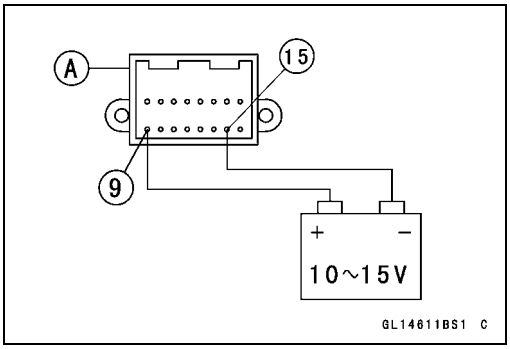

● Do the 2nd step test as follows.

○Check for continuity between the black/white lead terminal of the main harness side connector (meter unit) [A] and ground [B].

★If there is the continuity in the lead, replace or repair the main harness.

★If there is not the continuity in the lead, go to the 3rd step.

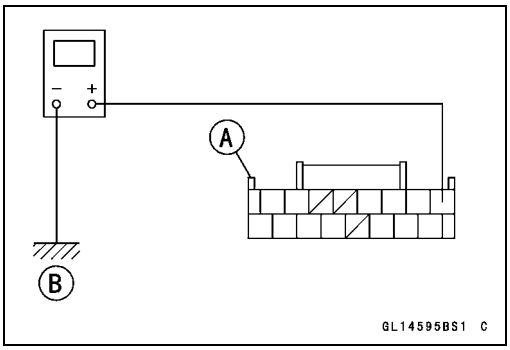

Anti-Lock Brake System (Equipped Models)

● Do the 3rd step test as follows.
○Disconnect the ABS hydraulic unit connector (see ABS Hydraulic Unit Removal).
○Check for continuity between the black/white lead terminal of the main harness side connector (meter unit) [A] and black/white lead terminal of the main harness side connector (ABS hydraulic unit) [B].
★If there is the continuity in the lead, replace the ABS hydraulic unit.
★If there is not the continuity in the lead, replace or repair the main harness.

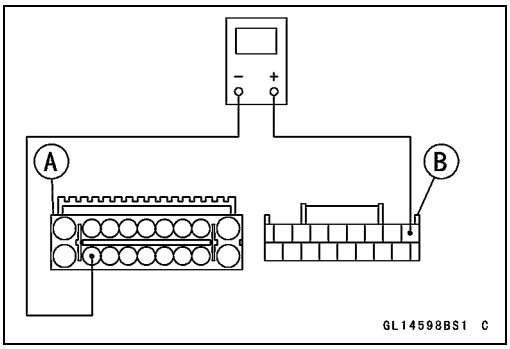

Yellow ABS Indicator Light (LED) goes on (When the Motorcycle is Running, - No Service Code)

● Disconnect:
ABS Hydraulic Unit Connector (see ABS Hydraulic Unit Removal)
Meter Unit Connector (see Meter Unit Removal in the Electrical System chapter)
● Do the 1st step test as follows.
○Check for continuity between the black/white lead terminal of the main harness side connector (meter unit) [A] and black/white lead terminal of the main harness side connector (ABS hydraulic unit) [B].

Special Tool - Hand Tester: 57001-1394

★If there is the continuity in the lead, replace the ABS hydraulic unit.
★If there is not the continuity in the lead, replace or repair the main harness.

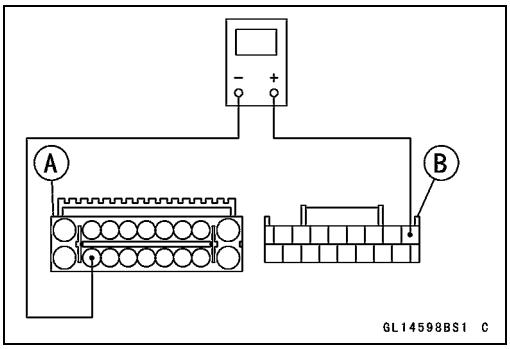

Solenoid Valve Inspection (Service Code 13, 14, 17, 18)

● Do the 1st step test as follows.
○Recheck the service code indication; erase the service code, perform the pre-diagnosis inspection 1 and 2, and retrieve the service code.
★If the yellow ABS indicator light (LED) [A] goes on, faulty solenoid valve in the ABS hydraulic unit. Replace the ABS hydraulic unit.
★If the yellow ABS indicator light (LED) does not go on, ABS system is normal (service code is not stored; temporary failure.).

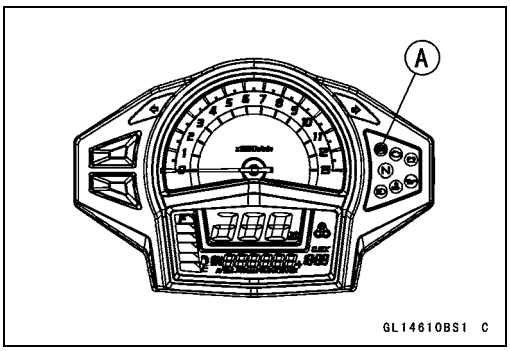

ABS Solenoid Valve Relay Inspection (Service Code 19)

● Do the 1st step test as follows.
○Check the ABS solenoid valve relay fuse [A].
★If the fuse blown, go to the 2nd step.
★If the fuse correct, go to the 4th step.

Anti-Lock Brake System (Equipped Models)

● Do the 2nd step test as follows.
○Disconnect the ABS hydraulic unit connector [A] (see ABS Hydraulic Unit Removal).
○Check for continuity between the red/black and black lead terminals of the ABS hydraulic unit connector.
★If there is the continuity in the lead, replace the ABS hydraulic unit.
★If there is not the continuity in the lead, go to the 3rd step.

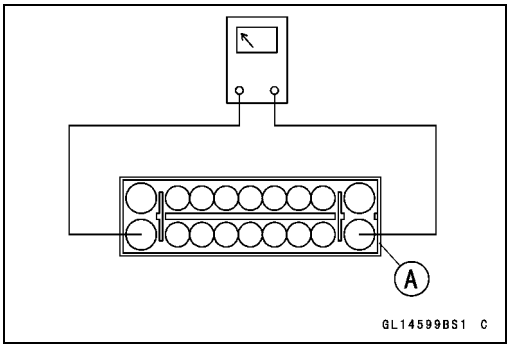

● Do the 3rd step test as follows.
○Check for continuity between the red/black lead terminal of the main harness side connector (ABS hydraulic unit) [A] and red/black lead terminal of the fuse box [B].
★If there is the continuity in the lead, replace the fuse.
★If there is not the continuity in the lead, replace or repair the main harness.

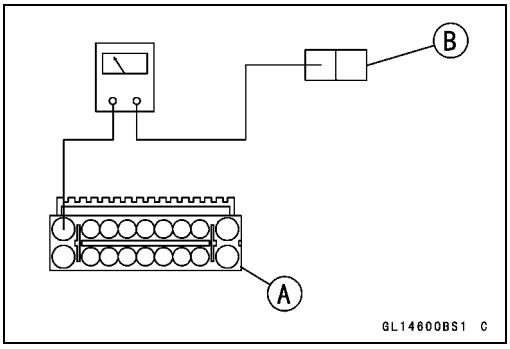

● Do the 4th step test as follows.
○Check the battery terminal voltage between the red/black lead terminal of the fuse box [A] and ground.

Special Tool - Hand Tester: 57001-1394

Battery Terminal Voltage
Standard: Battery Voltage

★If the battery terminal voltage is not within the specification, go to the 5th step.
★If the battery terminal voltage is correct, go to the 6th step.

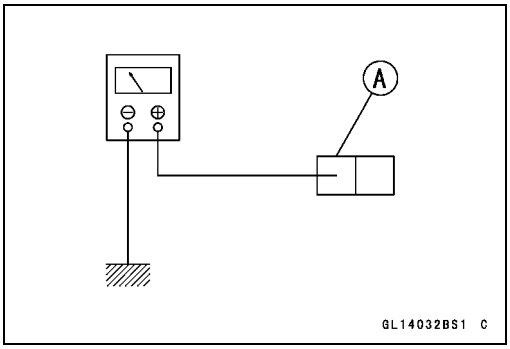

● Do the 5th step test as follows.
○Check for continuity between the positive (+) cable [A] of the battery and red/black lead terminal of the main harness side connector (ABS hydraulic unit) [B].
★If there is the continuity in the lead, go to the 4th step.
★If there is not the continuity in the lead, replace or repair the main harness.

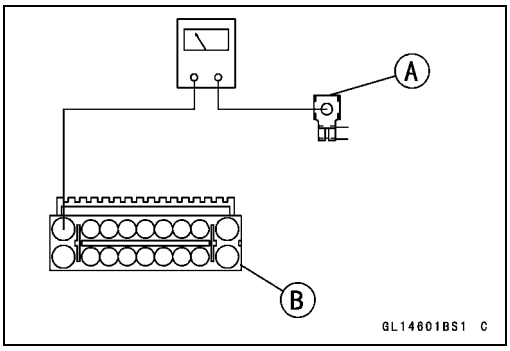

● Do the 6th step test as follows.
○Recheck the service code indication; erase the service code, perform the pre-diagnosis inspection 1 and 2, and retrieve the service code.
★If the yellow ABS indicator light (LED) [A] goes on, faulty ABS solenoid valve relay in the ABS hydraulic unit. Replace the ABS hydraulic unit.
★If the yellow ABS indicator light (LED) does not go on, ABS system is normal (service code is not stored; temporary failure.).

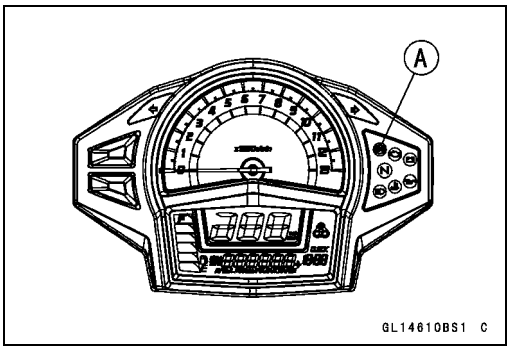

Anti-Lock Brake System (Equipped Models)

Front, Rear Wheel Rotation Difference Abnormal (Service Code 25)

● Do the 1st step test as follows.
○Check the following and correct the faulty part.
Incorrect the tire pressure.
Tires not recommended for the motorcycle were installed (incorrect tire size).
Deformation of the wheel or tire.
Sensor rotor for missing teeth and clogging with foreign matter.
★If the all parts correct, go to the 2nd step.

● Do the 2nd step test as follows.
○Recheck the service code indication; erase the service code, perform the pre-diagnosis inspection 1 and 2, and retrieve the service code.
★If the yellow ABS indicator light (LED) [A] goes on, faulty ECU in the ABS hydraulic unit. Replace the ABS hydraulic unit.
★If the yellow ABS indicator light (LED) does not go on, ABS system is normal (service code is not stored; temporary failure.).

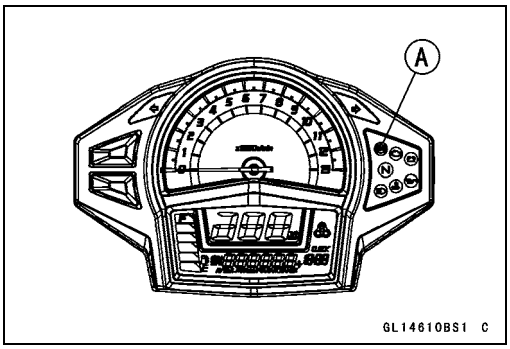

ABS Motor Relay Inspection (Service Code 35)

● Do the 1st step test as follows.
○Check the ABS motor relay fuse [A].
★If the fuse blown, go to the 2nd step.
★If the fuse correct, go to the 4th step.

● Do the 2nd step test as follows.
○Disconnect the ABS hydraulic unit connector [A] (see ABS Hydraulic Unit Removal).
○Check for continuity between the red/white and black lead terminals of the ABS hydraulic unit connector.
★If there is the continuity in the lead, replace the ABS hydraulic unit.
★If there is not the continuity in the lead, go to the 3rd step.

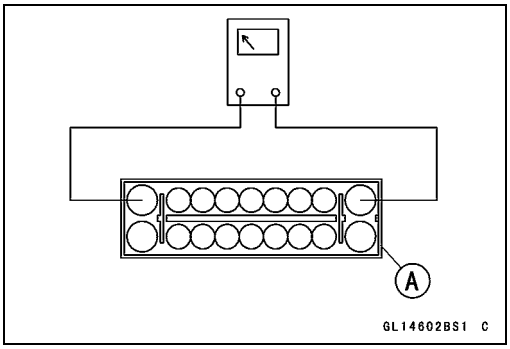

● Do the 3rd step test as follows.
○Check for continuity between the red/white lead terminal of the main harness side connector (ABS hydraulic unit) [A] and red/white lead terminal of the fuse box [B].
★If there is the continuity in the lead, replace the fuse.
★If there is not the continuity in the lead, replace or repair the main harness.

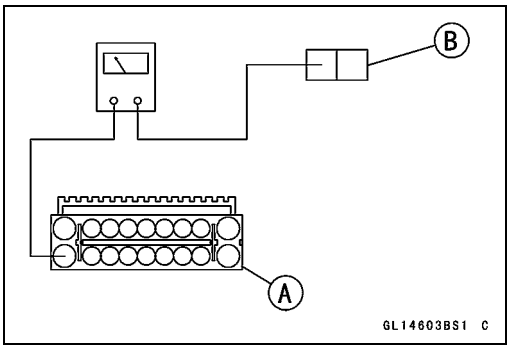

● Do the 4th step test as follows.
○Check the battery terminal voltage between the red/white lead terminal of the fuse box [A] and ground.

Special Tool - Hand Tester: 57001-1394

Battery Terminal Voltage
Standard: Battery Voltage

★If the battery terminal voltage is not within the specification, go to the 5th step.
★If the battery terminal voltage is correct, go to the 6th step.

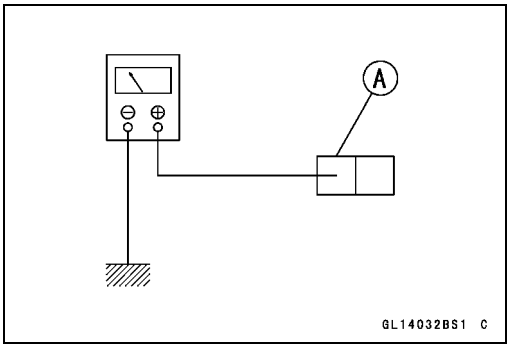

● Do the 5th step test as follows.
○Check for continuity between the positive (+) cable [A] of the battery and red/white lead terminal of the main harness side connector (ABS hydraulic unit) [B].
★If there is the continuity in the lead, go to the 4th step.
★If there is not the continuity in the lead, replace or repair the main harness.

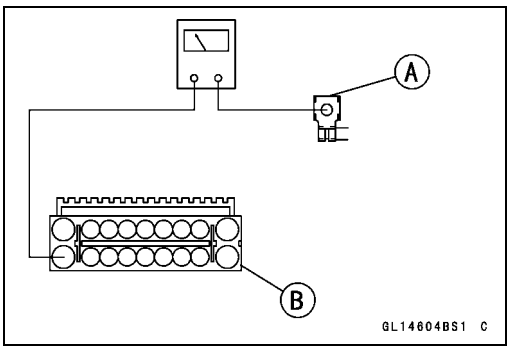

● Do the 6th step test as follows.
○Recheck the service code indication; erase the service code, perform the pre-diagnosis inspection 1 and 2, and retrieve the service code.
★If the yellow ABS indicator light (LED) [A] goes on, faulty ABS motor relay in the ABS hydraulic unit. Replace the ABS hydraulic unit.
★If the yellow ABS indicator light (LED) does not go on, ABS system is normal (service code is not stored; temporary failure.).

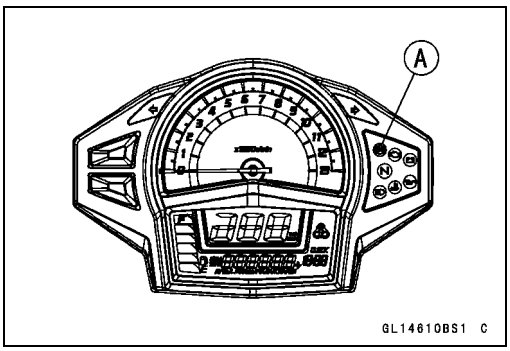

Front Wheel Rotation Sensor Signal Abnormal (Service Code 42)

● Do the 1st step test as follows.
○Measure the air gap between the front wheel rotation sensor and sensor rotor.
Thickness Gauge [A]

Front Wheel Rotation Sensor Air Gap
Standard: 0.3 ~ 1.7 mm (0.01 ~ 0.07 in.)

★If the measurement is over standard, check each part for deformation and looseness and correct accordingly. Recheck the air gap.
★If the measurement is correct, go to the 2nd step.

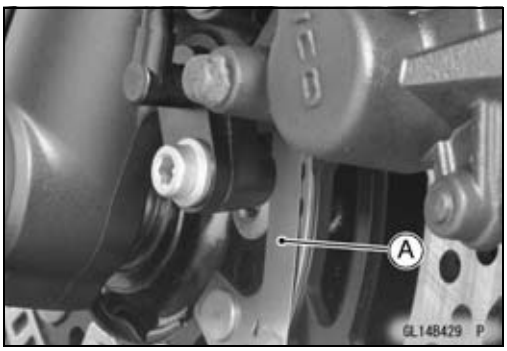

Anti-Lock Brake System (Equipped Models)

● Do the 2nd step test as follows.
○Check that there is iron or other magnetic deposits between the sensor [A] and sensor rotor [B], and the sensor rotor slots for obstructions.
○Check the installation condition of the sensor for looseness.
○Check the sensor and sensor rotor tip for deformation or damage (e.g., chipped sensor rotor teeth).
★If the sensor and sensor rotor in bad condition, remove the any deposits. Install the properly or replace faulty part.
★If the all items are correct, go to the 3rd step.

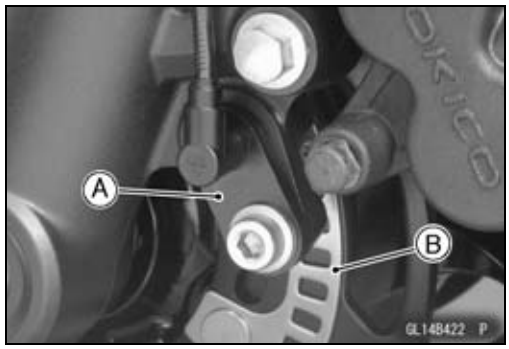

● Do the 3rd step test as follows.
○Recheck the service code indication; erase the service code, perform the pre-diagnosis inspection 1 and 2, and retrieve the service code.
★If the yellow ABS indicator light (LED) [A] goes on, faulty ECU in the ABS hydraulic unit. Replace the ABS hydraulic unit.
★If the yellow ABS indicator light (LED) does not go on, ABS system is normal (service code is not stored; temporary failure.).

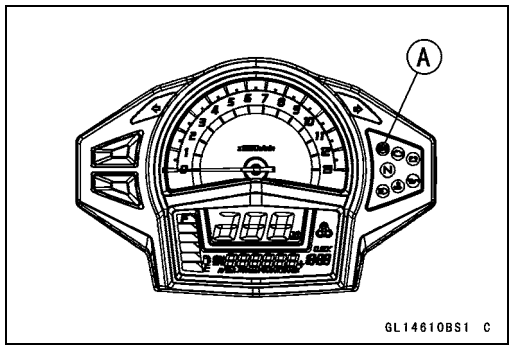

Front Wheel Rotation Sensor Wiring Inspection (Service Code 43)

● Do the 1st step test as follows.
○Disconnect:
ABS Hydraulic Unit Connector (see ABS Hydraulic Unit Removal)
Front Wheel Rotation Sensor Connector (see Front Wheel Rotation Sensor Removal)
○Short the white and yellow lead terminals of the main harness side connector (ABS hydraulic unit) [A] with a jumper lead.
○Check for continuity between the white and yellow lead terminals of the main harness side connector (front wheel rotation sensor) [B].
★If there is the continuity in the lead, go to the 2nd step.
★If there is not the continuity in the lead, replace or repair the main harness.

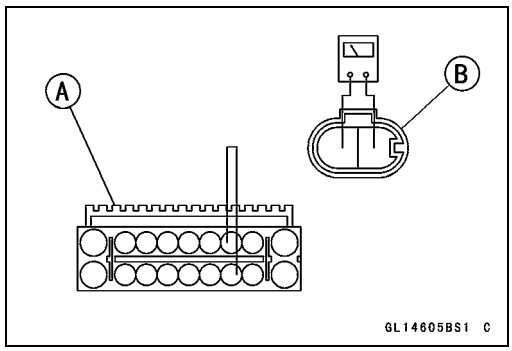

● Do the 2nd step test as follows.
○Check for continuity between the white lead terminal of the sensor connector [A] and ground, and yellow lead terminal of the sensor connector and ground.
★If there is the continuity in the lead, replace the front wheel rotation sensor.
★If there is not the continuity in the lead, go to the 3rd step.

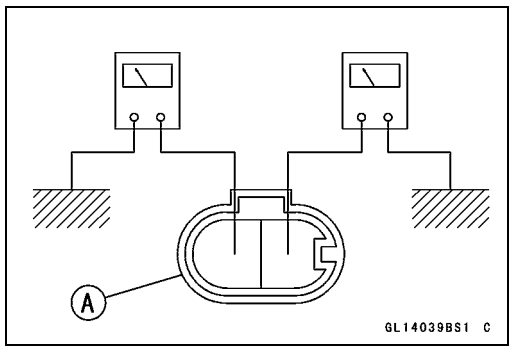

● Do the 3rd step test as follows.
○Recheck the service code indication; erase the service code, perform the pre-diagnosis inspection 1 and 2, and retrieve the service code.
★If the yellow ABS indicator light (LED) [A] goes on, faulty ECU in the ABS hydraulic unit. Replace the ABS hydraulic unit.
★If the yellow ABS indicator light (LED) does not go on, ABS system is normal (service code is not stored; temporary failure.).

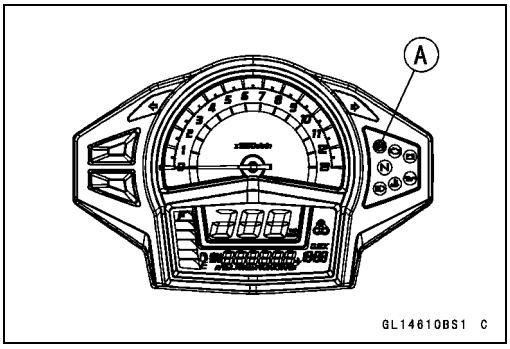

Rear Wheel Rotation Sensor Signal Abnormal (Service Code 44)

● Do the 1st step test as follows.
○Measure the air gap between the rear wheel rotation sensor and sensor rotor.
Thickness Gauge [A]

Rear Wheel Rotation Sensor Air Gap
Standard: 0.3 ~ 1.7 mm (0.01 ~ 0.07 in.)

★If the measurement is over standard, check each part for deformation and looseness and correct accordingly. Recheck the air gap.
★If the measurement is correct, go to the 2nd step.

● Do the 2nd step test as follows.
○Check that there is iron or other magnetic deposits between the sensor [A] and sensor rotor [B], and the sensor rotor slots for obstructions.
○Check the installation condition of the sensor for looseness.
○Check the sensor and sensor rotor tip for deformation or damage (e.g., chipped sensor rotor teeth).
★If the sensor and sensor rotor in bad condition, remove the any deposits. Install the properly or replace faulty part.
★If the all items are correct, go to the 3rd step.

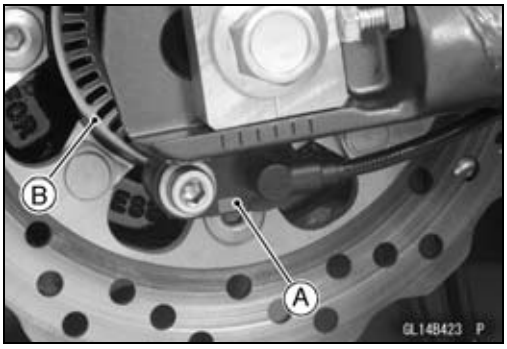

● Do the 3rd step test as follows.
○Recheck the service code indication; erase the service code, perform the pre-diagnosis inspection 1 and 2, and retrieve the service code.
★If the yellow ABS indicator light (LED) [A] goes on, faulty ECU in the ABS hydraulic unit. Replace the ABS hydraulic unit.
★If the yellow ABS indicator light (LED) does not go on, ABS system is normal (service code is not stored; temporary failure.).

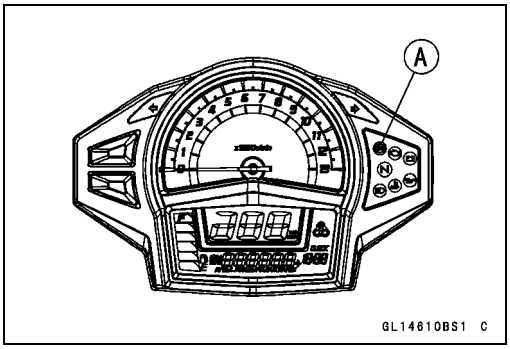

Anti-Lock Brake System (Equipped Models)

Rear Wheel Rotation Sensor Wiring Inspection (Service Code 45)

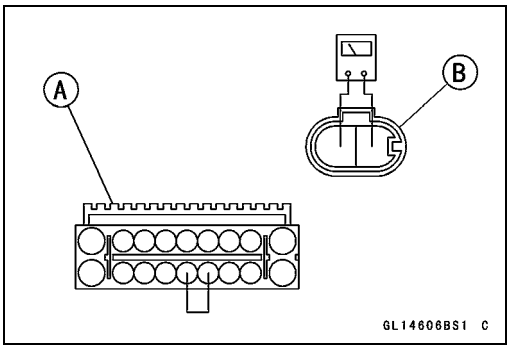

● Do the 1st step test as follows.

○Disconnect:

ABS Hydraulic Unit Connector (see ABS Hydraulic Unit Removal)

Rear Wheel Rotation Sensor Connector (see Rear Wheel Rotation Sensor Removal)

○Short the red and green lead terminals of the main harness side connector (ABS hydraulic unit) [A] with a jumper lead.

○Check for continuity between the red and green lead terminals of the main harness side connector (rear wheel rotation sensor) [B].

★If there is the continuity in the lead, go to the 2nd step.

★If there is not the continuity in the lead, replace or repair the main harness.

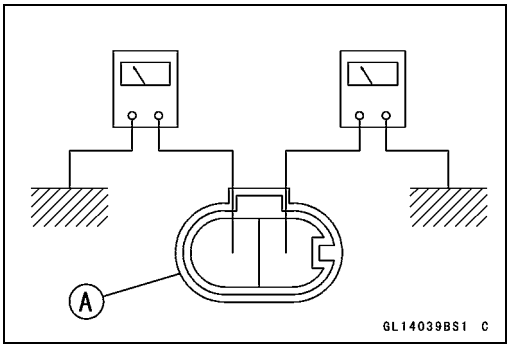

● Do the 2nd step test as follows.

○Check for continuity between the red lead terminal of the sensor connector [A] and ground, and green lead terminal of the sensor connector and ground.

★If there is the continuity in the lead, replace the rear wheel rotation sensor.

★If there is not the continuity in the lead, go to the 3rd step.

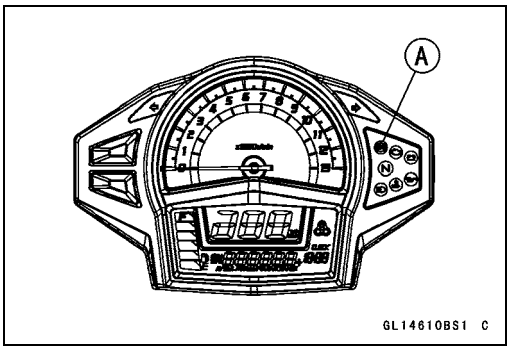

● Do the 3rd step test as follows.

○Recheck the service code indication; erase the service code, perform the pre-diagnosis inspection 1 and 2, and retrieve the service code.

★If the yellow ABS indicator light (LED) [A] goes on, faulty ECU in the ABS hydraulic unit. Replace the ABS hydraulic unit.

★If the yellow ABS indicator light (LED) does not go on, ABS system is normal (service code is not stored; temporary failure.).

Power Supply Voltage Abnormal (Under-Voltage) (Service Code 52)

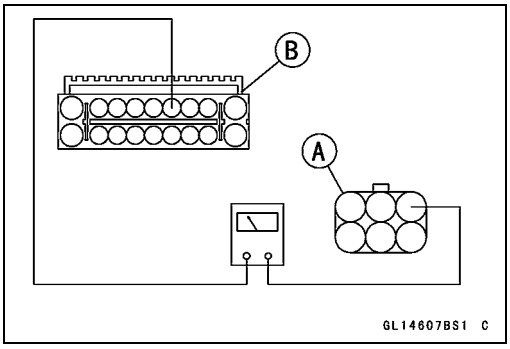

● Do the 1st step test as follows.

○Disconnect:

ABS Kawasaki Diagnostic System Connector

ABS Hydraulic Unit Connector (see ABS Hydraulic Unit Removal)

○Check for continuity between the red/white lead terminal of the main harness side connector [A] and brown/white lead terminal of the main harness side connector (ABS hydraulic unit) [B].

★If there is the continuity in the lead, go to the 2nd step.

★If there is not the continuity in the lead, replace or repair the main harness.

Anti-Lock Brake System (Equipped Models)

● Do the 2nd step test as follows.
○Connect the ABS Kawasaki diagnostic system connector and ABS hydraulic unit connector.
○Check the battery terminal voltage, connect the hand tester to the brown/white terminal of ABS Kawasaki diagnostic system connector [A] and ground.

Special Tool - Hand Tester: 57001-1394

○Turn the ignition switch to ON.

Battery Terminal Voltage
Standard: 9.6 V or more

★If the battery terminal voltage is not within the specification, go to the 3rd step.
★If the battery terminal voltage is correct, go to the 4th step.

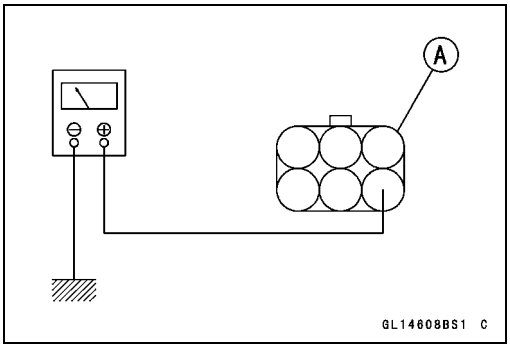

● Do the 3rd step test as follows.
○Inspect the following parts.
Battery (see Charging Condition Inspection in the Electrical System chapter)
Ignition Switch (see Switch Inspection in the Electrical System chapter)
Main Harness (see Wiring Inspection in the Electrical System chapter)
Main Fuse 30 A (see Fuse Inspection in the Electrical System chapter)

● Do the 4th step test as follows.
○Recheck the service code indication; erase the service code, perform the pre-diagnosis inspection 1 and 2, and retrieve the service code.
★If the yellow ABS indicator light (LED) [A] goes on, faulty ECU in the ABS hydraulic unit. Replace the ABS hydraulic unit.
★If the yellow ABS indicator light (LED) does not go on, ABS system is normal (service code is not stored; temporary failure.).

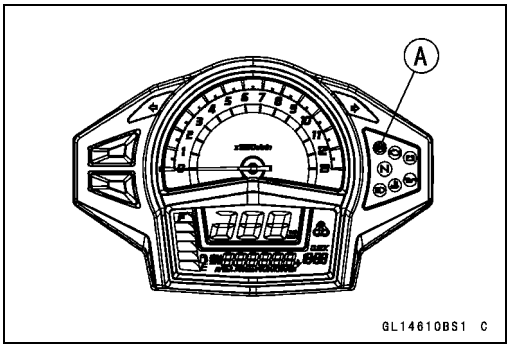

Power Supply Voltage Abnormal (Over-Voltage) (Service Code 53)

● Do the 1st step test as follows.
○Disconnect:
ABS Kawasaki Diagnostic System Connector
ABS Hydraulic Unit Connector (see ABS Hydraulic Unit Removal)
○Check for continuity between the red/white lead terminal of the main harness side connector [A] and brown/white lead terminal of the main harness side connector (ABS hydraulic unit) [B].
★If there is the continuity in the lead, go to the 2nd step.
★If there is not the continuity in the lead, replace or repair the main harness.

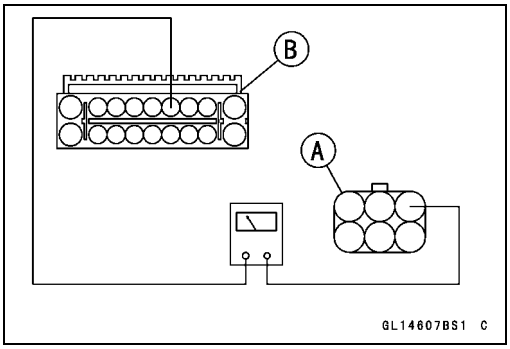

Anti-Lock Brake System (Equipped Models)

● Do the 2nd step test as follows.
○Connect the ABS Kawasaki diagnostic system connector and ABS hydraulic unit connector.
○Check the battery terminal voltage, connect the hand tester to the brown/white terminal of ABS Kawasaki diagnostic system connector [A] and ground.

Special Tool - Hand Tester: 57001-1394

○Turn the ignition switch to ON.

Battery Terminal Voltage
Standard: 16.6 V or less

★If the battery terminal voltage is not within the specification, go to the 3rd step.
★If the battery terminal voltage correct, go to the 4th step.

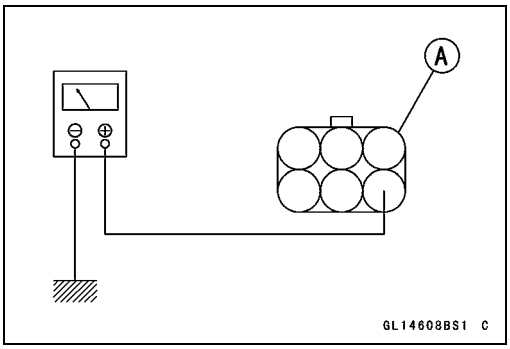

● Do the 3rd step test as follows.
○Check the battery condition and regulator/rectifier (see Charging Condition Inspection, Regulator/Rectifier Inspection in the Electrical System chapter).

● Do the 4th step test as follows.
○Recheck the service code indication; erase the service code, perform the pre-diagnosis inspection 1 and 2, and retrieve the service code.
★If the yellow ABS indicator light (LED) [A] goes on, faulty ECU in the ABS hydraulic unit. Replace the ABS hydraulic unit.
★If the yellow ABS indicator light (LED) does not go on, ABS system is normal (service code is not stored; temporary failure.).

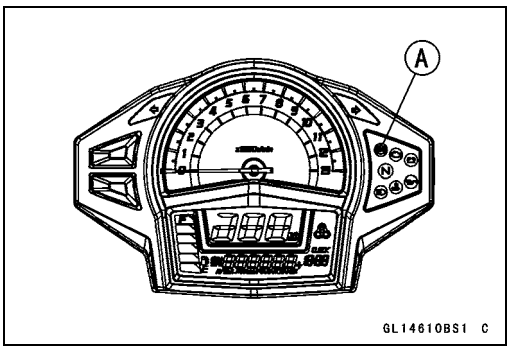

ECU Inspection (Service Code 55)

● Do the 1st step test as follows.
○Recheck the service code indication; erase the service code, perform the pre-diagnosis inspection 1 and 2, and retrieve the service code.
★If the yellow ABS indicator light (LED) [A] goes on, faulty ECU in the ABS hydraulic unit. Replace the ABS hydraulic unit.
★If the yellow ABS indicator light (LED) does not go on, ABS system is normal (service code is not stored; temporary failure.).

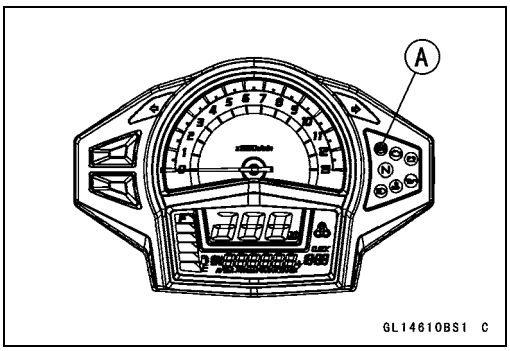

Anti-Lock Brake System (Equipped Models)

ABS Hydraulic Unit Removal

NOTICE

The ABS hydraulic unit has been adjusted and set with precision at the factory. Therefore, it should be handled carefully, never struck sharply, as with a hammer, or allowed to fall on a hard surface.
Be careful not to get water or mud on the ABS hydraulic unit.

- Drain the brake fluid from the front and rear brake lines.
  - ○Drain the brake fluid through the bleed valve by pumping the brake lever and pedal.
- Remove:
  Muffler (see Muffler Removal in the Engine Top End chapter)
  Rear Master Cylinder (see Rear Master Cylinder Removal)
  Right Footpeg Stay (see Footpeg Stay Removal in the Frame chapter)
- Support the frame using the jack.

  Special Tool - Jack: 57001-1238
- Put a block in front of the front wheel to stop moving.
- Remove the rear shock absorber (see Rear Shock Absorber Removal in the Suspension chapter).

- Remove:
  Right Swingarm Bracket Bolts [A]
  Swingarm Pivot Shaft Nut
  Swingarm Pivot Shaft [B]
  Right Swingarm Bracket [C]
- Clean the ABS hydraulic unit.

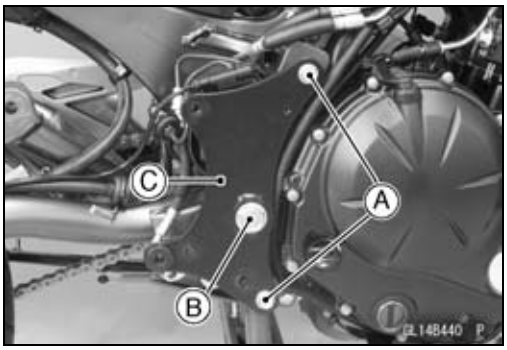

NOTICE

Clean all fittings on the ABS hydraulic unit and the rear master cylinder because dirt around the banjo bolts could contaminate the brake fluid in the line during removal/installation.
Spread out a shop towel around the ABS hydraulic unit before removing the brake line so that brake fluid does not leak on the parts.

- Free the hose [A] from the clamps [B], [C].

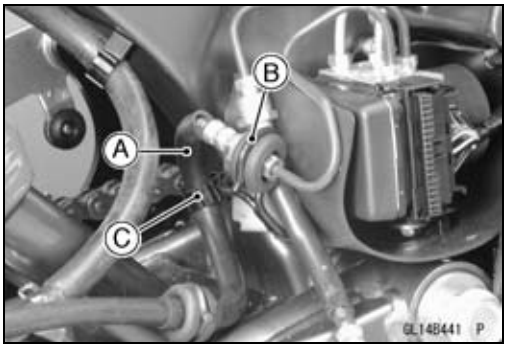

Anti-Lock Brake System (Equipped Models)

- Remove the brake pipe joint nuts [A] with the flare nut wrench.

NOTE

○*Remove the brake hoses and pipes according to each assembly of the exploded view.*

- Tape the brake line opening to prevent brake fluid leakage or contamination by foreign matter.

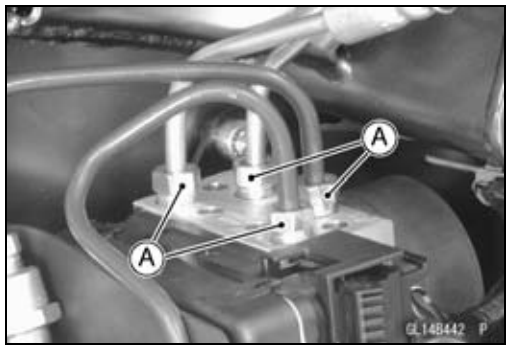

NOTICE

Brake fluid quickly ruins painted plastic surfaces; any spilled fluid should be completely washed away immediately.

- Disconnect the connector [A].

○Pull the lever [B] as shown.

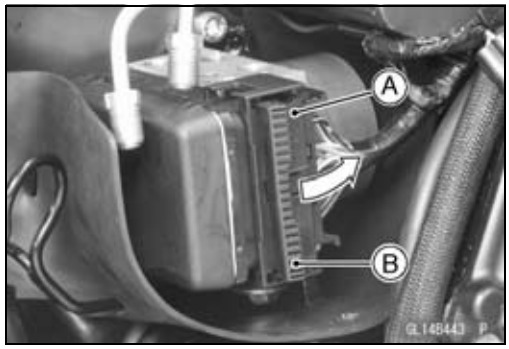

- Remove:
  ABS Hydraulic Unit Mounting Bolts [A]
  Dust Cover [B]
  ABS Hydraulic Unit [C]

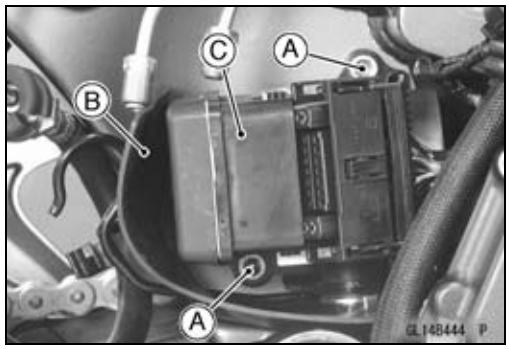

- Remove:
  Bolts [A] and Washers
  Bracket [B]

NOTICE

The ABS hydraulic unit has been adjusted and set with precision at the factory. Do not try to disassemble and repair the ABS hydraulic unit.

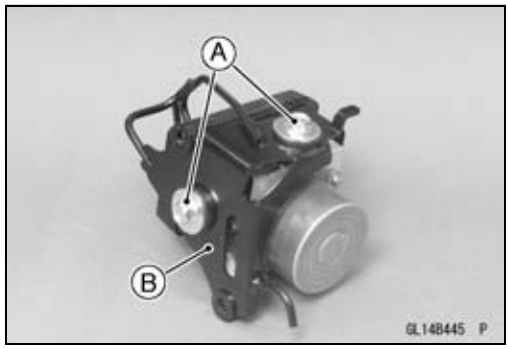

Anti-Lock Brake System (Equipped Models)

ABS Hydraulic Unit Installation

- Install the bracket to the ABS hydraulic unit.

NOTICE

Brake fluid quickly ruins painted plastic surfaces; any spilled fluid should be completely washed away immediately.

- Install the ABS hydraulic unit to the frame.
- Run the lead correctly (see Cable, Wire, and Hose Routing section in the Appendix chapter).
- Connect the connector securely.
- Run the brake pipes correctly (see Cable, Wire, and Hose Routing section in the Appendix chapter).

- Install the brake pipes.
  To Rear Master Cylinder [A]
  To Rear Caliper [B]
  To Front Master Cylinder [C]
  To Front Calipers [D]
- Tighten the brake pipe joint nuts with the flare nut wrench.

Torque - Brake Pipe Joint Nuts: 18 N·m (1.8 kgf·m, 13 ft·lb)

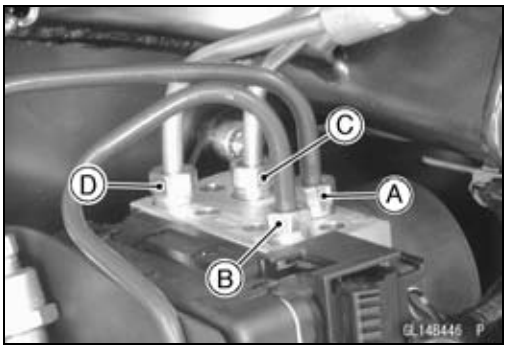

- Install the removed parts (see appropriate chapters).
- Fill the brake line (see Brake Fluid Change in the Periodic Maintenance chapter).

ABS Hydraulic Unit Inspection

- Remove the ABS hydraulic unit (see ABS Hydraulic Unit Removal).
- Visually inspect the ABS hydraulic unit.

★If the ABS hydraulic unit is cracked, or otherwise damaged, replace it.

- Visually inspect the connector terminals [A].

★Replace the ABS hydraulic unit or main harness if either of the terminals are cracked, bent, or otherwise damaged.

★If the ABS hydraulic unit connector is clogged with mud or dust, blow it off with compressed air.

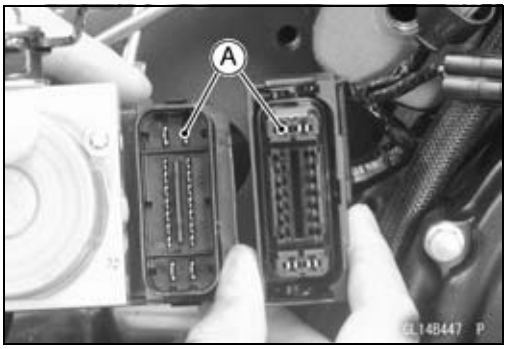

Front Wheel Rotation Sensor Removal

NOTICE

The wheel rotation sensor should be handled carefully, never struck sharply, as with a hammer, or allowed to fall on a hard surface since the wheel rotation sensor is precision made. Be careful not to get water or mud on the wheel rotation sensor.
Do not try to disassemble or repair the wheel rotation sensor.

Anti-Lock Brake System (Equipped Models)

● Disconnect the front wheel rotation sensor connector [A].

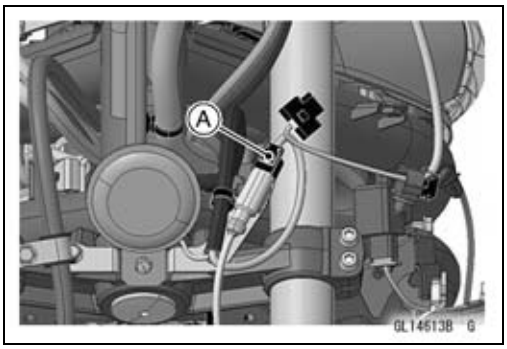

● Free the front wheel rotation sensor lead [A] from the clamps [B].

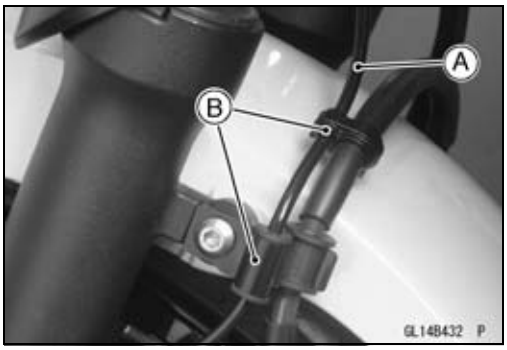

● Remove:
Front Wheel Rotation Sensor Bolt [A]
Front Wheel Rotation Sensor [B]

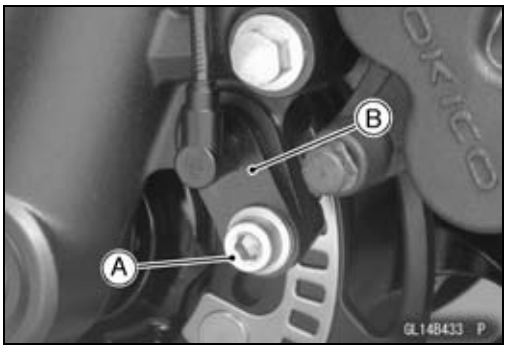

Front Wheel Rotation Sensor Installation

● Installation is the reverse of removal.

○Run the lead correctly (see Cable, Wire, and Hose Routing section in the Appendix chapter).

○Tighten:

Torque - Front Wheel Rotation Sensor Bolt: 20 N·m (2.0 kgf·m, 15 ft·lb)

Rear Wheel Rotation Sensor Removal

NOTICE
The wheel rotation sensor should be handled carefully, never struck sharply, as with a hammer, or allowed to fall on a hard surface since the wheel rotation sensor is precision made. Be careful not to get water or mud on the wheel rotation sensor. **Do not try to disassemble or repair the wheel rotation sensor.**

Anti-Lock Brake System (Equipped Models)

- Remove:
  Right Frame Cover (see Frame Cover Removal in the Frame chapter)
- Disconnect the connector [A].

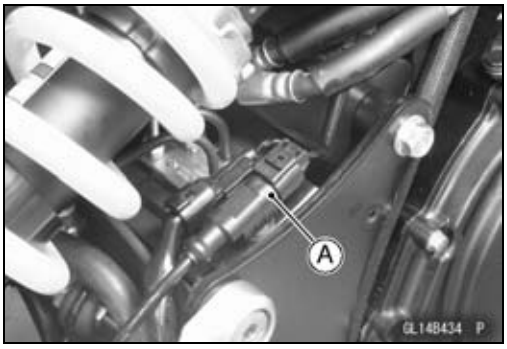

- Remove:
  Rear Wheel Rotation Sensor Bolt [A]
  Rear Wheel Rotation Sensor [B]
- Free the sensor lead from the clamps.

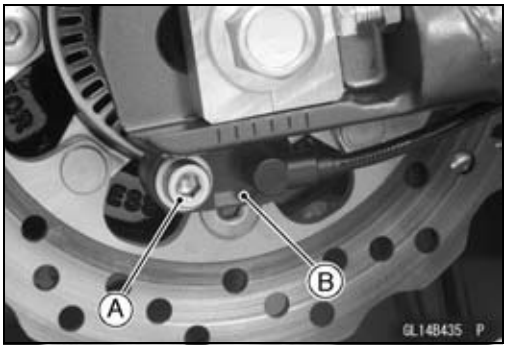

Rear Wheel Rotation Sensor Installation

- Installation is the reverse of removal.

○Run the lead correctly (see Cable, Wire, and Hose Routing section in the Appendix chapter).

○Tighten:

Torque - Rear Wheel Rotation Sensor Bolt: 20 N·m (2.0 kgf·m, 15 ft·lb)

Wheel Rotation Sensor Inspection

- Remove the front wheel rotation sensor [A] from the front fork.
- Remove the rear wheel rotation sensor [B] from the caliper bracket.
- Visually inspect the wheel rotation sensors.

★Replace the wheel rotation sensor if it is cracked, bent, or otherwise damaged.

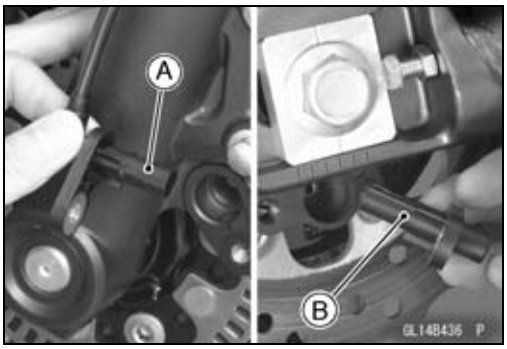

Anti-Lock Brake System (Equipped Models)

Wheel Rotation Sensor Air Gap Inspection

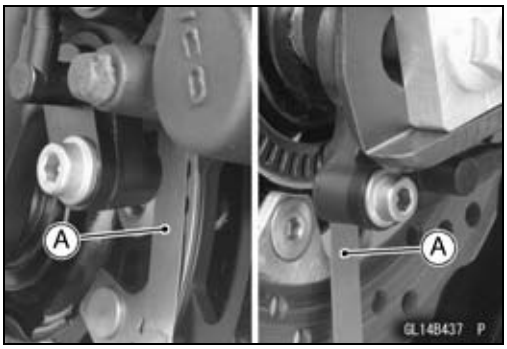

- Raise the front/rear wheel off the ground (see Front/Rear Wheel Removal in the Wheels/Tires chapter).
- Measure the air gap between the sensor and sensor rotor at several points by turning the wheel slowly.
  Thickness Gauge [A]

Wheel Rotation Sensor Air Gap
Standard:

Front	**0.3 ~ 1.7 mm (0.01 ~ 0.07 in.)**
Rear	**0.3 ~ 1.7 mm (0.01 ~ 0.07 in.)**

NOTE

○*The sensor air gap cannot be adjusted.*

★If the air gap is not within the specification, inspect the hub bearing (see Hub Bearing Inspection in the Wheels/Tires chapter), sensor installation condition and sensor (see Wheel Rotation Sensor Inspection).

Wheel Rotation Sensor Rotor Inspection

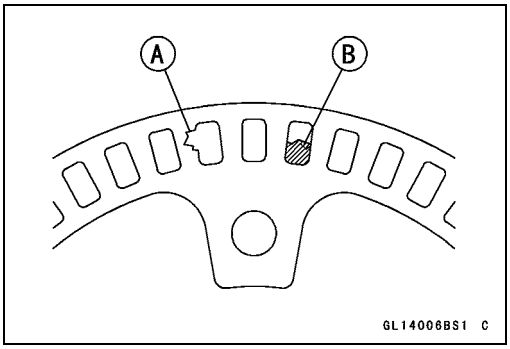

- Remove the front/rear brake discs (see Brake Disc Removal).
- Visually inspect the wheel rotation sensor rotor.

★If the rotor is deformed or damaged (chipped teeth [A]), replace the sensor rotor with the brake disc.

★If there is iron or other magnetic deposits [B], remove the deposits.

Brake Hose and Pipe Removal/Installation

- Refer to the Brake Hose and Pipe Replacement in the Periodic Maintenance chapter.

Brake Hose and Pipe Inspection

- Refer to the Brake Hose and Pipe Damage and Installation Condition Inspection in the Periodic Maintenance chapter.

ABS Solenoid Valve Relay Fuse 15 A Removal

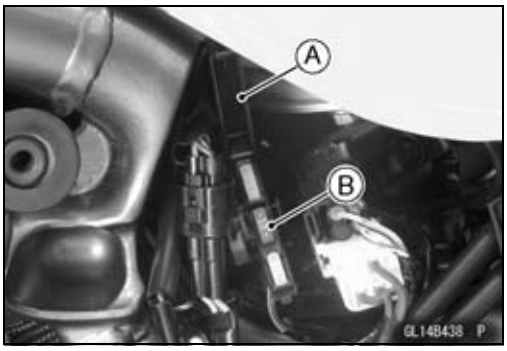

- Remove the left frame cover (see Frame Cover Removal in the Frame chapter).
- Unlock the hook, and open the lid [A].
- Pull out the relay fuse [B] from the fuse box with needle nose pliers.

Anti-Lock Brake System (Equipped Models)

ABS Motor Relay Fuse 25 A Removal

- Remove the left frame cover (see Frame Cover Removal in the Frame chapter).
- Unlock the hook, and open the lid [A].
- Pull out the relay fuse [B] from the fuse box with needle nose pliers.

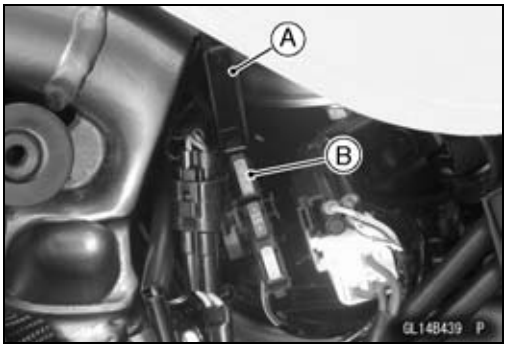

Fuse Installation

- If a fuse fails during operation, inspect the electrical system to determine the cause, and then replace it with a new fuse of proper amperage.

Fuse Inspection

- Remove the fuse (see ABS Solenoid Valve Relay Fuse 15 A/ABS Motor Relay Fuse 25 A Removal).
- Inspect the fuse element.

★If it is blown out, replace the fuse. Before replacing a blown fuse, always check the amperage in the affected circuit. If the amperage is equal to or greater than the fuse rating, check the wiring and related components for a short circuit.

Housing [A]
Fuse Element [B]
Terminals [C]
Blown Element [D]

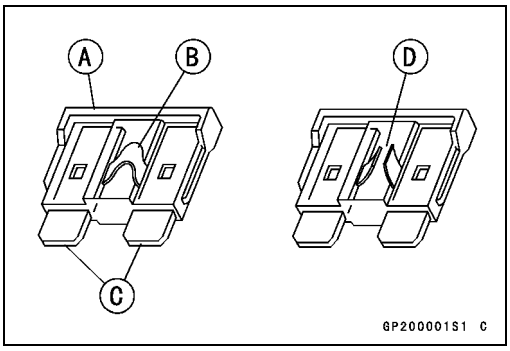

NOTICE

When replacing a fuse, be sure the new fuse matches the specified fuse rating for that circuit. Installation of a fuse with a higher rating may cause damage to wiring and components.

Suspension

Table of Contents

Exploded View 13-2
Specifications 13-6
Special Tools 13-7
Front Fork 13-8
Front Fork Removal 13-8
Front Fork Installation 13-8
Front Fork Oil Change 13-9
Front Fork Disassembly 13-10
Front Fork Assembly 13-12
Inner Tube, Outer Tube Inspection 13-13
Dust Seal Inspection 13-13
Spring Tension Inspection 13-14
Rear Shock Absorber 13-15
Spring Preload Adjustment 13-15
Rear Shock Absorber Removal 13-15
Rear Shock Absorber Installation 13-16
Rear Shock Absorber Inspection 13-16
Swingarm 13-17
Swingarm Removal 13-17
Swingarm Installation 13-18
Swingarm Bearing Removal 13-18
Swingarm Bearing Installation 13-19
Swingarm Bearing, Sleeve Inspection 13-20
Swingarm Bearing Lubrication 13-20
Chain Guide Inspection 13-20

Exploded View

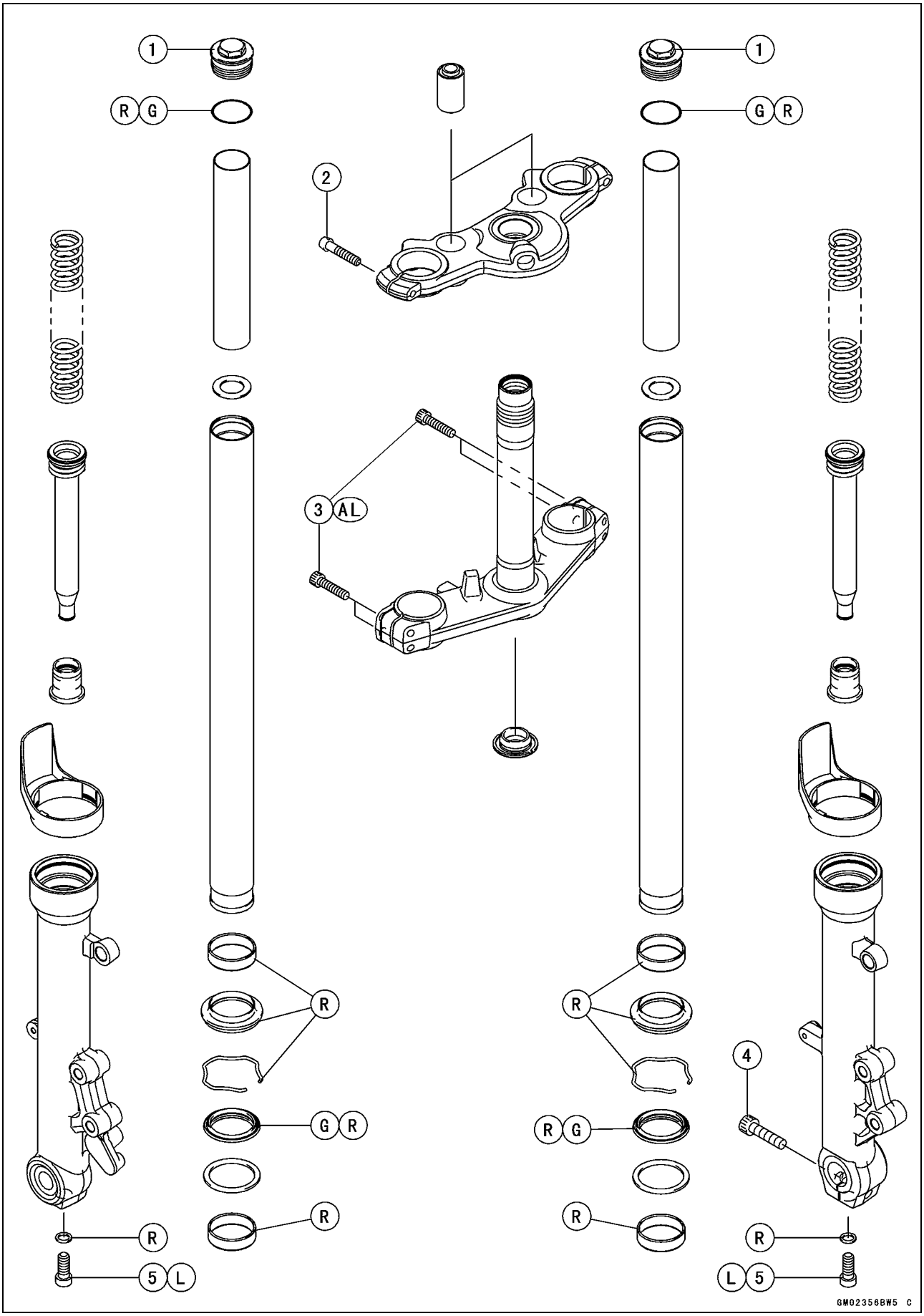

Exploded View

No.	Fastener	Torque			Remarks
		N·m	kgf·m	ft·lb	
1	Front Fork Top Plugs	22.5	2.3	17	
2	Front Fork Clamp Bolts (Upper)	20	2.0	15	
3	Front Fork Clamp Bolts (Lower)	20.5	2.1	15	AL
4	Front Axle Clamp Bolt	34	3.5	25	
5	Front Fork Bottom Allen Bolts	30	3.1	22	L

AL: Tighten the two clamp bolts alternately two times to ensure even tightening torque.
G: Apply grease.
L: Apply a non-permanent locking agent.
R: Replacement Parts

Exploded View

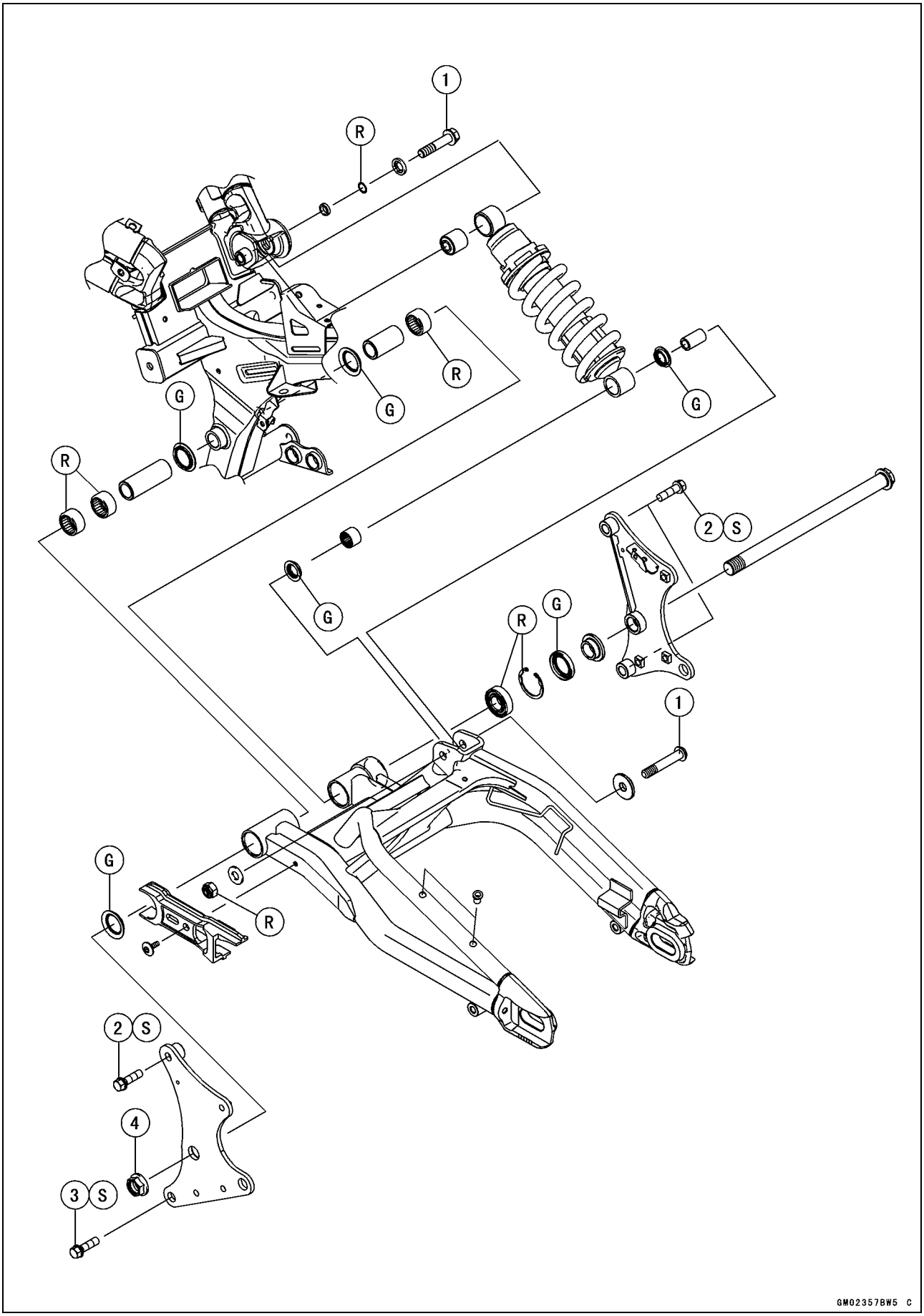

Exploded View

No.	Fastener	Torque			Remarks
		N·m	kgf·m	ft·lb	
1	Rear Shock Absorber Mounting Bolts	59	6.0	44	
2	Swingarm Bracket Bolts	44	4.5	32	S
3	Swingarm Bracket Bolt (Lower Left)	59	6.0	44	S
4	Swingarm Pivot Shaft Nut	108	11.0	80	

G: Apply grease.
R: Replacement Parts

Specifications

Item	Standard
Front Fork (Per One Unit)	
Fork Inner Tube Outside Diameter	41 mm (1.6 in.)
Air Pressure	Atmospheric pressure (Non-adjustable)
Fork Spring Setting	Non-adjustable
Damper Setting	Non-adjustable
Fork Oil:	
Recommended Oil	KAYABA KHL34-G10 or equivalent
Amount	approx. 410 mL (13.9 US oz.) (when changing oil) 484 ±4 mL (16.4 ±0.14 US oz.) (after disassembly and completely dry)
Fork Oil Level	98 ±2 mm (3.86 ±0.08 in.) (below from inner tube top with fully compressed, without fork spring)
Fork Spring Free Length	301.3 mm (11.86 in.) (Service limit: 295 mm (11.61 in.))
Rear Shock Absorber	
Spring Preload	3rd position (Adjustable Range: 1st ~ 7th position)
Gas Pressure	980 kPa (10 kgf/cm², 142 psi, Non-adjustable)

Special Tools

Inside Circlip Pliers:
57001-143

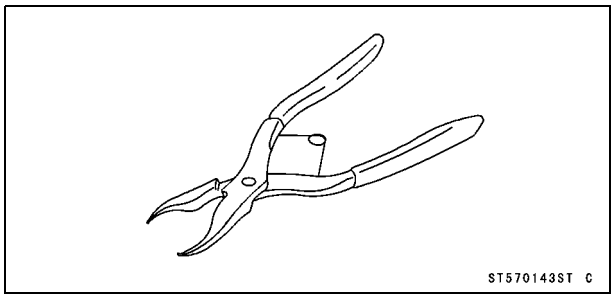

Jack:
57001-1238

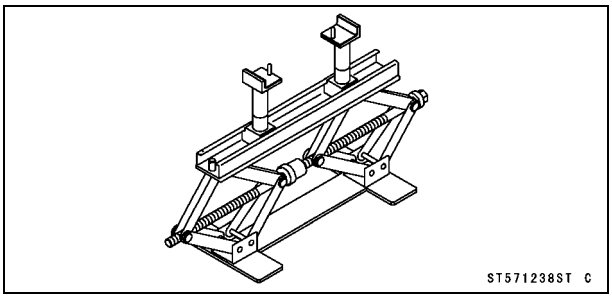

Fork Cylinder Holder Handle:
57001-183

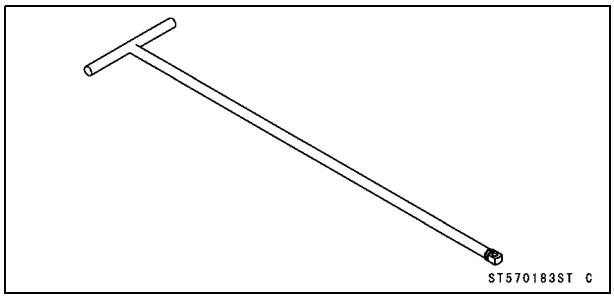

Front Fork Oil Seal Driver:
57001-1219

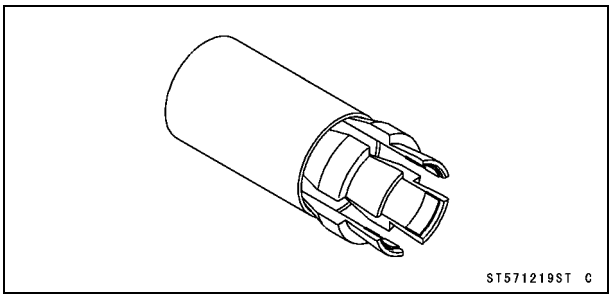

Fork Cylinder Holder Adapter:
57001-1057

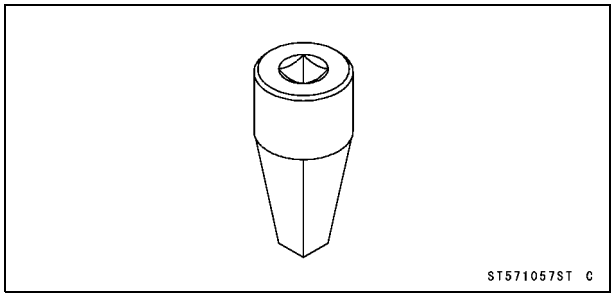

Fork Oil Level Gauge:
57001-1290

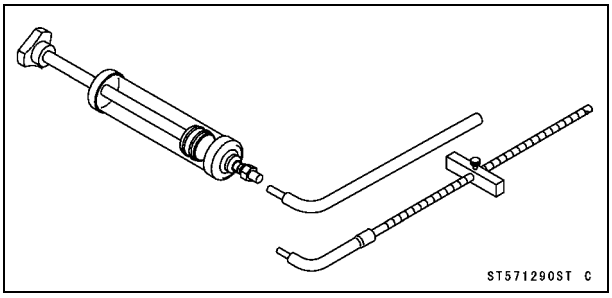

Oil Seal & Bearing Remover:
57001-1058

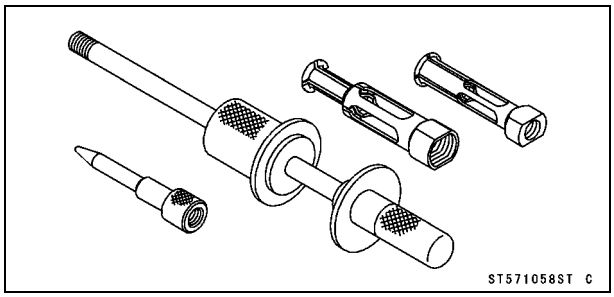

Needle Bearing Driver, ϕ28:
57001-1610

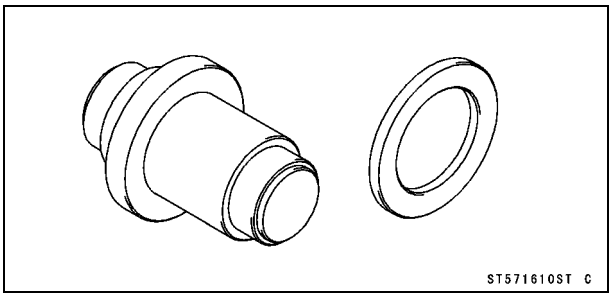

Bearing Driver Set:
57001-1129

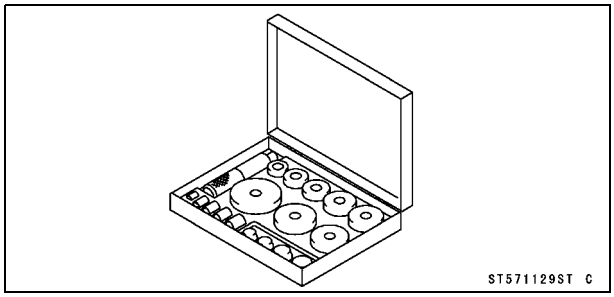

Spacerϕ28:
57001-1663

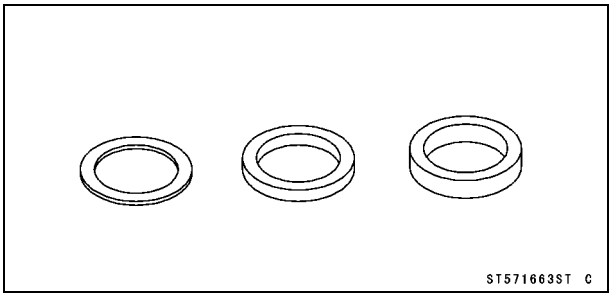

Front Fork

Front Fork Removal

- Remove:
  Middle Fairings (see Middle Fairing Removal in the Frame chapter)
  Front Fender (see Front Fender Removal in the Frame chapter)
  Front Wheel (see Front Wheel Removal in the Wheels/Tires chapter)
  Front Wheel Rotation Sensor Lower End (ABS equipped models, see Front Wheel Rotation Sensor Removal in the Brakes chapter)

★Loosen the upper front fork clamp bolt [A] and front fork top plug [B] beforehand if the fork leg is to be disassembled.

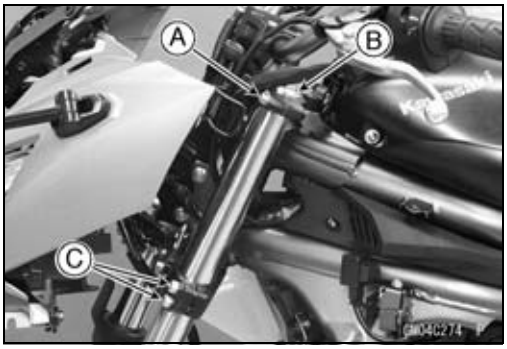

NOTE

○*Loosen the top plug after loosening the upper front fork clamp bolt.*

- Loosen the upper front fork clamp bolt and lower front fork clamp bolts [C].
- With a twisting motion, work the front fork leg down and out.

Front Fork Installation

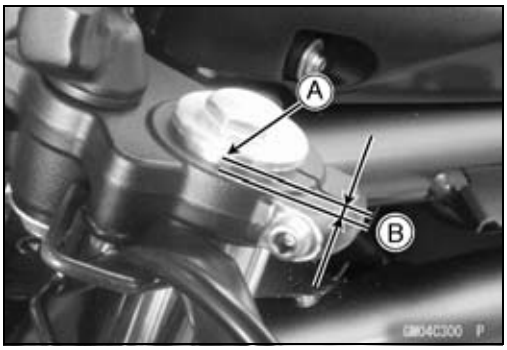

- Install the front fork so that the top end [A] of the inner tube is as shown in the figure.
  3 mm (0.12 in.) [B]

★If the front fork top plugs were loosened, tighten them.

Torque - Front Fork Top Plugs: 22.5 N·m (2.3 kgf·m, 17 ft·lb)

- Tighten:

Torque - Front Fork Clamp Bolts (Lower): 20.5 N·m (2.1 kgf·m, 15 ft·lb)

NOTE

○*Tighten the top plug before tightening the upper front fork clamp bolt.*
○*Tighten the two lower front fork clamp bolts alternately two times to ensure even tightening torque.*

- Tighten:

Torque - Front Fork Clamp Bolts (Upper): 20 N·m (2.0 kgf·m, 15 ft·lb)

- Install the removed parts (see appropriate chapters).

Front Fork

Front Fork Oil Change

- Remove:
  Front Fork (see Front Fork Removal)
  Top Plug [A] with O-ring
  Spacer [B]
  Fork Spring Seat [C]
  Fork Spring [D]

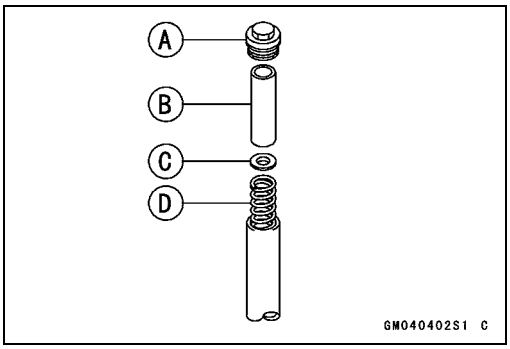

- Compress [A] the fork [B] upside down to draw out the oil into the suitable container [C].

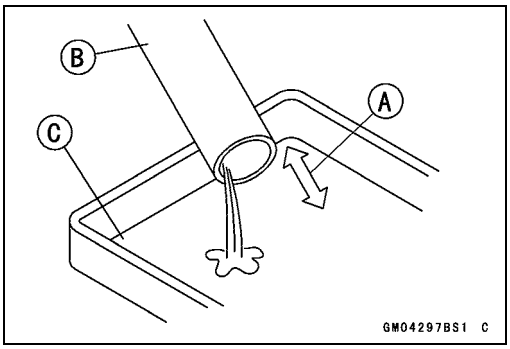

- Hold the fork tube upright, pour in the specified type and amount of fork oil.

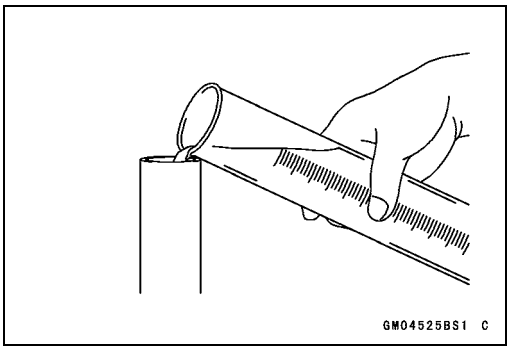

Fork Oil

Recommended Oil:

KAYABA KHL34-G10 or equivalent

Amount (Per Side):

When changing oil: approx. 410 mL (13.9 US oz.)

After disassembly and completely dry:

484 ±4 mL (16.4 ±0.14 US oz.)

NOTE

○*Move the outer tube up and down a few times to remove the air that is trapped in the fork oil in order to stabilize the oil level.*

Front Fork

- Hold the outer tube vertically in a vise and compress the fork completely.
- Wait until the oil level stabilizes.
- Use the fork oil level gauge [A] to measure the distance from the top of the inner tube to the oil level.

Special Tool - Fork Oil Level Gauge: 57001-1290

○Set the oil level gauge stopper [B] so that the distance [C] from the bottom of the stopper to the lower end of the pipe is the standard oil level distance.

○A correct measurement can not be obtained unless the level gauge pipe is placed in the center of the inner tube.

Oil Level (fully compressed, without spring)
Standard: 98 ±2 mm (3.86 ±0.08 in.)

○Place the stopper of the level gauge at the top [D] of the inner tube [E] and pull the handle slowly to draw out the excess oil from fork into the gauge, thus attaining the standard level.

★If no oil is drawn out, there is not enough oil in the fork. Pour in some more oil and measure again.

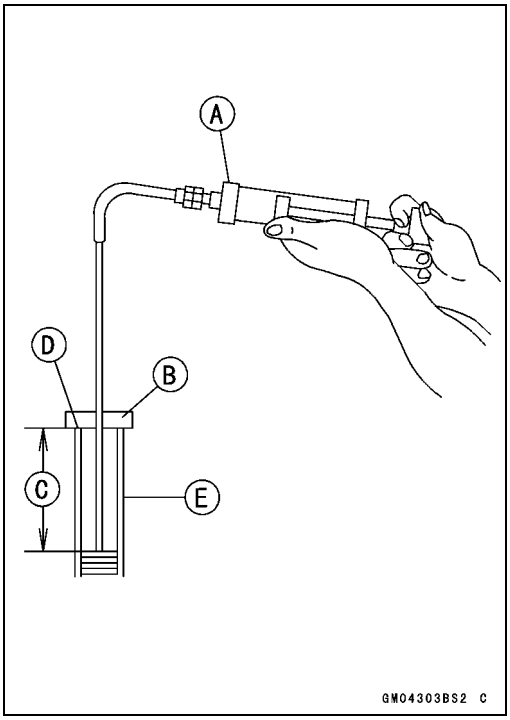

- Repeat the same procedure for adjusting the other fork.
- Install:
  Fork Spring [A]
  Fork Spring Seat [B]
  Spacer [C]
- Replace the top plug O-ring with a new one.
- Apply grease to the top plug O-ring.
- Install:
  Top Plug
  Front Fork (see Front Fork Installation)

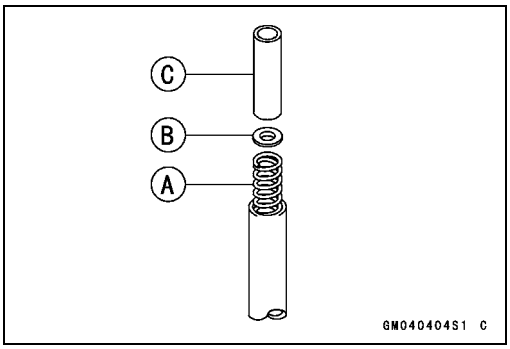

Front Fork Disassembly

- Remove:
  Front Fork (see Front Fork Removal)
  Top Plug [A] with O-ring
  Spacer [B]
  Fork Spring Seat [C]
  Fork Spring [D]
- Drain the fork oil (see Front Fork Oil Change).

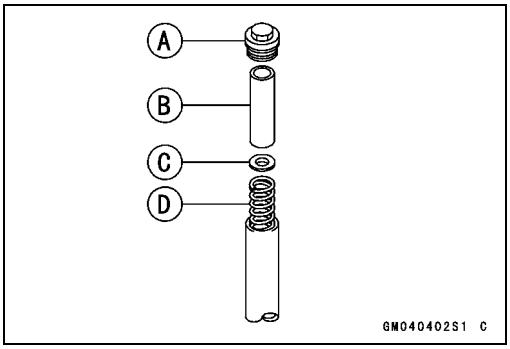

- Remove the fork bottom Allen bolt [A] and gasket from the bottom of the fork.

Special Tools - Fork Cylinder Holder Handle [B]: 57001-183
Fork Cylinder Holder Adapter [C]: 57001-1057

NOTE

○*Hold the outer tube in a vise [D], stop the cylinder unit [E] from turning by using the special tools, and unscrew the Allen bolt.*

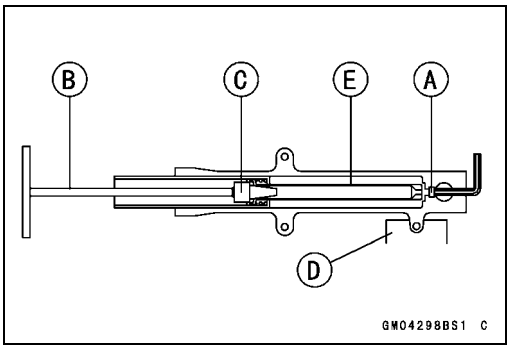

Front Fork

- Remove the cylinder unit [A], washer [B], and the spring [C] from the inner tube.

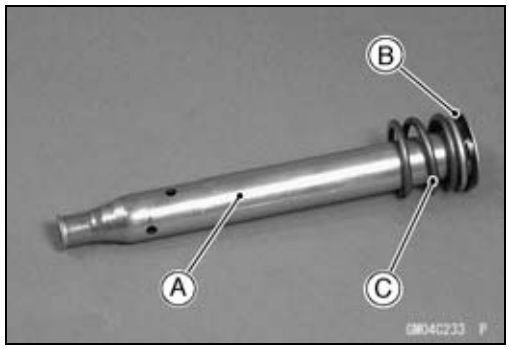

- Remove the following from the top of the outer tube.
  Dust Seal [A]
  Retaining Ring [B]

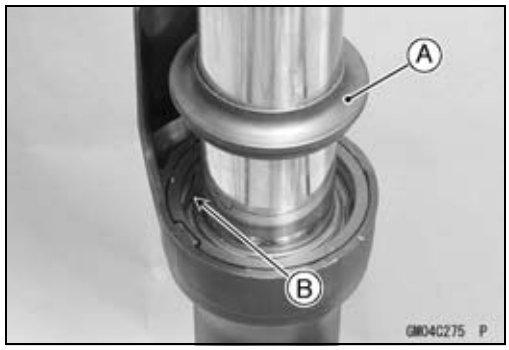

- Separate the inner tube [A] from the outer tube [B].

NOTE

○*From the compressed state, firmly pull down the outer tube a few times towards the direction of elongation.*

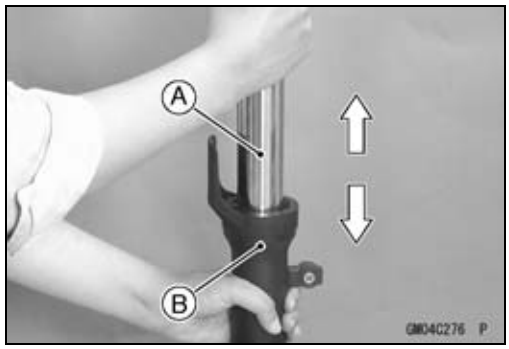

- Remove the following from the inner tube.
  Inner Guide Bushing [A]
  Outer Guide Bushing [B]
  Washer [C]
  Oil Seal [D]

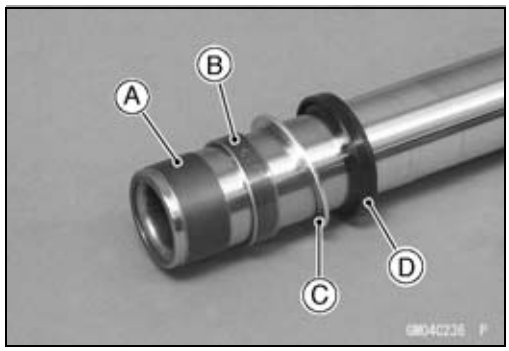

- Remove the cylinder base [A] from the bottom of the outer tube.

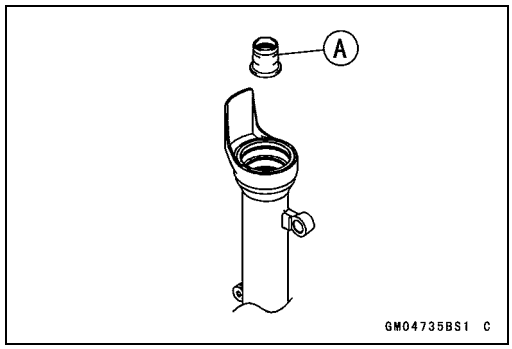

Front Fork

Front Fork Assembly

- Replace the following parts with new ones.
  Top Plug O-ring
  Retaining Ring [A]
  Dust Seal [B]
  Oil Seal [C]
  Inner Guide Bushing [D]
  Outer Guide Bushing [E]
  Fork Bottom Allen Bolt Gasket [F]

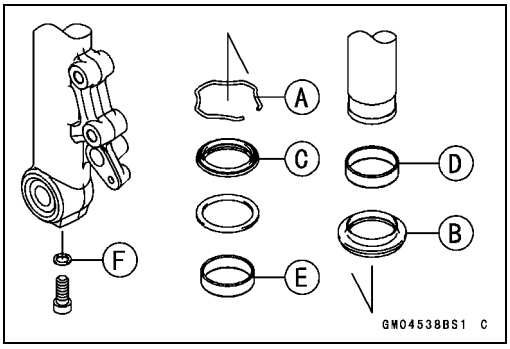

- Install the following on the end of the inner tube.
  Outer Guide Bushing
  Inner Guide Bushing
- Insert the cylinder unit [A] and the spring into the inner tube.
- Be sure that the spring [B] is in position.
- Install the cylinder base [C] onto the end of the cylinder unit as shown in the figure.
- Insert the following as a set into the outer tube.
  Inner Tube
  Cylinder Unit
  Washer
  Spring
  Cylinder Base

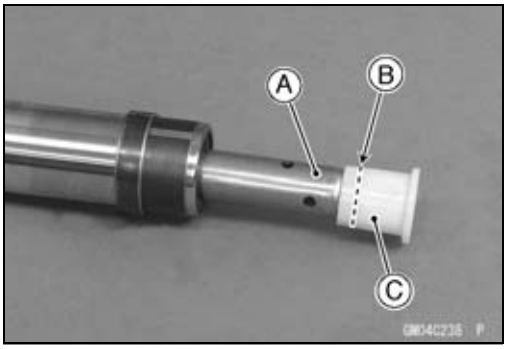

- Install the new guide bushing [A] with the used one [B].
- Tap the used guide bushing with the front fork oil seal driver [C] to install the new guide bushing.

○The split [D] of the bushing should face toward the side of the motorcycle.

Special Tool - Front Fork Oil Seal Driver: 57001-1219

- Remove the used guide bushing.

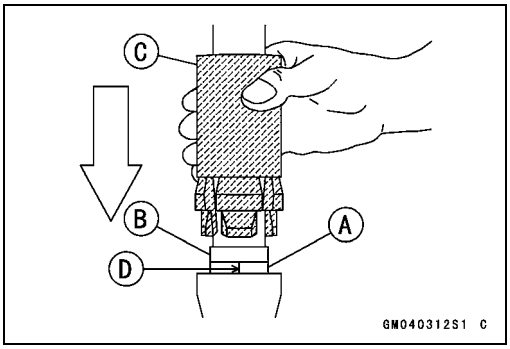

- Apply grease to the oil seal lips.
- Install the washer and the oil seal [A] into the outer tube.

Special Tool - Front Fork Oil Seal Driver [B]: 57001-1219

- Install the retaining ring on the outer tube.

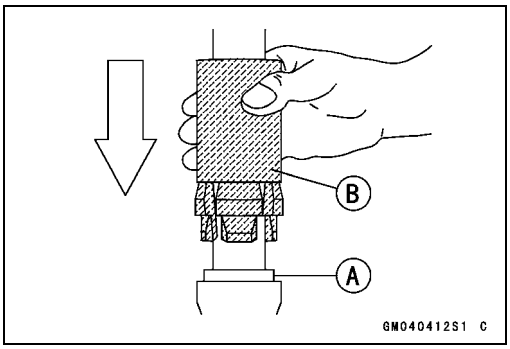

Front Fork

- Apply non-permanent locking agent to the threads of the bottom Allen bolt [A].
- Hold the front fork horizontally in a vise [B].
- Hold the cylinder unit [C] with the special tools and tighten the bottom Allen bolt to secure the cylinder in place.

Special Tools - Fork Cylinder Holder Handle [D]: 57001-183
Fork Cylinder Holder Adapter [E]: 57001 -1057

Torque - Front Fork Bottom Allen Bolt: 30 N·m (3.1 kgf·m, 22 ft·lb)

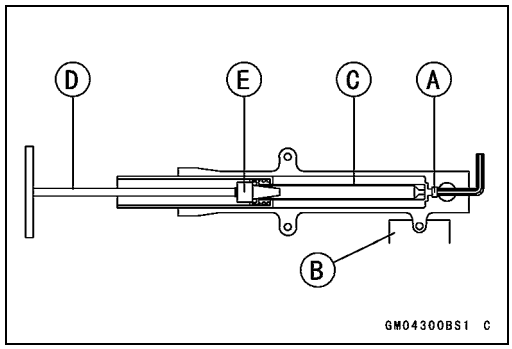

- Pour in the specified type and amount of oil (see Front Fork Oil Change).
- Install the front fork (see Front Fork Installation).

Inner Tube, Outer Tube Inspection

- Visually inspect the inner tube [A], and repair any damage.
- Nicks or rust damage can sometimes be repaired by using a wet-stone to remove sharp edges or raised areas which cause seal damage.

★If the damage is not repairable, replace the inner tube. Since damage to the inner tube damages the oil seal, replace the oil seal whenever the inner tube is repaired or replaced.

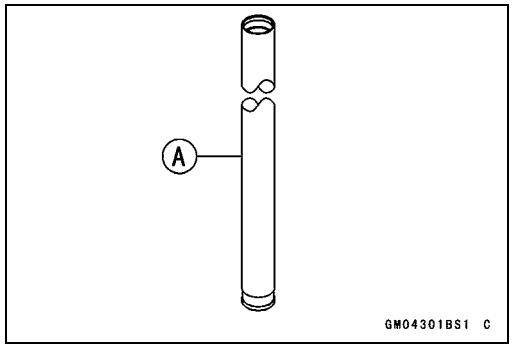

NOTICE

If the inner tube is badly bent or creased, replace it. Excessive bending, followed by subsequent straightening, can weaken the inner tube.

- Temporarily assemble the inner [A] and outer [B] tubes, and pump them back and forth manually to check for smooth operation.

★If you feel binding or catching, replace the inner and outer tubes with new ones.

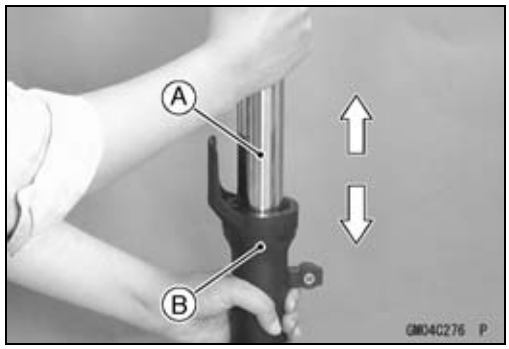

⚠ WARNING

A straightened inner or outer fork tube may fall in use, possibly causing an accident resulting in serious injury or death. Replace a badly bent or damaged inner or outer tube and inspect the other tube carefully before reusing it.

Dust Seal Inspection

- Inspect the dust seal [A] for any signs of deterioration or damage.

★If necessary, replace the dust seal with a new one.

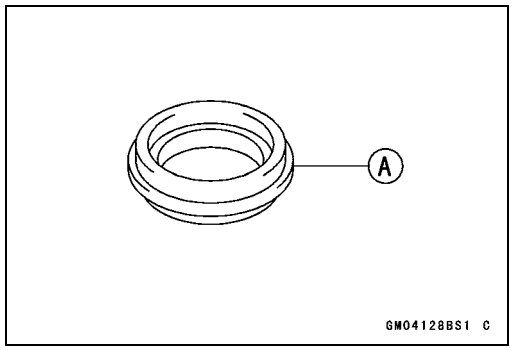

Front Fork

Spring Tension Inspection

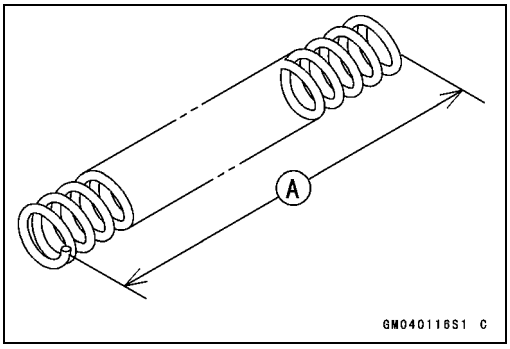

- Since a spring becomes shorter as it weakens, check its free length [A] to determine its condition.

★If the spring of either fork leg is shorter than the service limit, replace it with a new one. If the length of a replacement spring and that of the remaining spring vary greatly, the remaining spring should also be replaced in order to keep the fork legs balanced for motorcycle stability.

Spring Free Length

Standard:	**301.3 mm (11.86 in.)**
Service Limit:	**295 mm (11.61 in.)**

Rear Shock Absorber

Spring Preload Adjustment

- Using the hook wrench [A], turn the adjusting nut [B] to adjust the spring preload.

○The standard adjuster setting is 3rd position.

Spring Preload Setting

Standard Position: 3rd position

Adjustable Range: 1st to 7th position

- If the compression of the spring is not suited to the operating conditions, adjust it to an appropriate position by referring to the table below.

Spring Preload Adjustment

Adjuster Position	Damping Force	Shock Absorber Hardness	Load	Road Conditions	Driving Speed
1st	Weak	Soft	Light	Good	Low
↑	↑	↑	↑	↑	↑
↓	↓	↓	↓	↓	↓
7th	Strong	Hard	Heavy	Bad	Highway

Rear Shock Absorber Removal

- Remove:
  Frame Covers (see Frame Cover Removal in the Frame chapter)
  Right Footpeg Stay (see Footpeg Stay Removal in the Frame chapter)
  Muffler (see Muffler Removal in the Engine Top End chapter)
  Lower Fairing Bracket (see Lower Fairing Bracket Removal in the Frame chapter)
- Raise the rear wheel off the ground using the jack.

Special Tool - Jack: 57001-1238

- Squeeze the brake lever slowly and hold it with a band [A].

⚠ WARNING

Be sure to hold the front brake when removing the shock absorber, or the motorcycle may fall over. It could cause an accident and injury.

Rear Shock Absorber

● Remove:
Right Stay Cover [A]

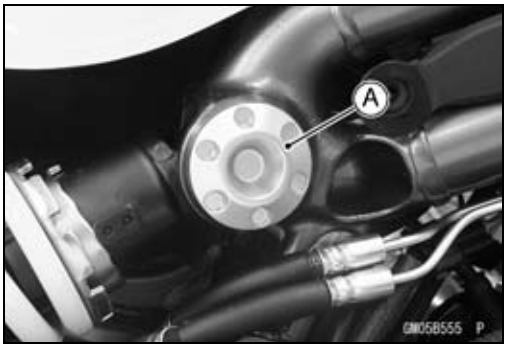

● Remove:
Rear Shock Absorber Mounting Bolt (Upper) [A], Washer and O-ring
Rear Shock Absorber Mounting Bolt (Lower) [B], Nut, Collar and Washer
● Remove the rear shock absorber [C] backward.

Rear Shock Absorber Installation

● Installation is the reverse of removal.
○Be sure to install the oil seals [A] to the rear shock absorber.
● Apply grease to the lip of oil seals.
○Be sure to install the collar [B] and sleeve [C] to the rear shock absorber.
● Install the rear shock absorber so that the label [D] side faces inside.
● Replace the O-ring [E] with a new one.
● Replace the rear shock absorber mounting nut [F] with a new one.
● Install the washers [G] and collar [H].
● Tighten the rear shock absorber mounting bolts [I] and nut.

Torque - Rear Shock Absorber Mounting Bolts: 59 N·m (6.0 kgf·m, 44 ft·lb)

● Install the removed parts (see appropriate chapters).

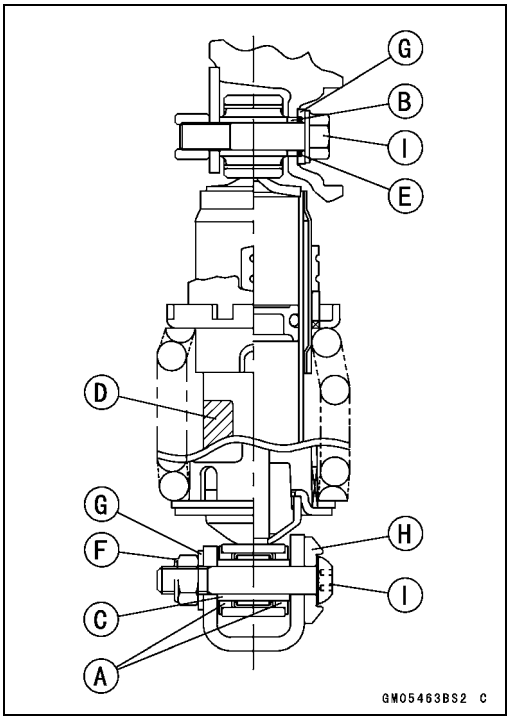

Rear Shock Absorber Inspection

● Remove the rear shock absorber (see Rear Shock Absorber Removal).
● Visually inspect the following items.
Smooth Stroke
Oil Leakage
Crack or Dent
★If there is any damage to the rear shock absorber, replace it.
● Visually inspect the rubber bushing.
★If it shows any signs of damage, replace it.

Swingarm

Swingarm Removal

- Remove:
  Chain Cover Bolts [A]
  Chain Cover [B]

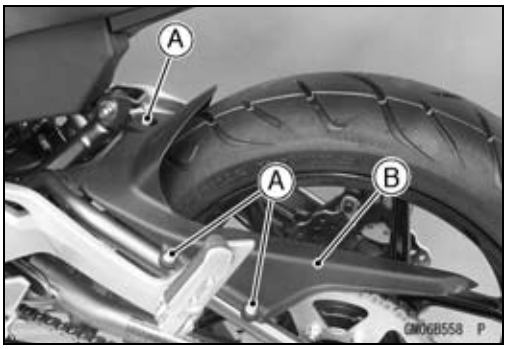

- Remove:
  Frame Covers (see Frame Cover Removal in the Frame chapter)
  Engine Sprocket Cover (see Engine Sprocket Cover Removal in the Final Drive chapter)
  Footpeg Stays (see Footpeg Stay Removal in the Frame chapter)
  Muffler (see Muffler Removal in the Engine Top End chapter)
  Rear Caliper (see Rear Caliper Removal in the Brakes chapter)

- Loosen the lower rear shock absorber mounting bolt [A] and nut [B].

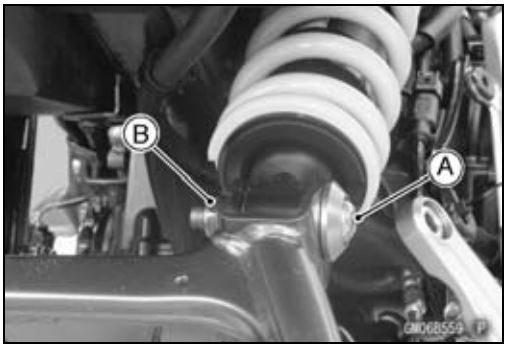

- Loosen:
  Swingarm Pivot Shaft Nut [A]
  Swingarm Bracket Bolts [B] (Left and Right)

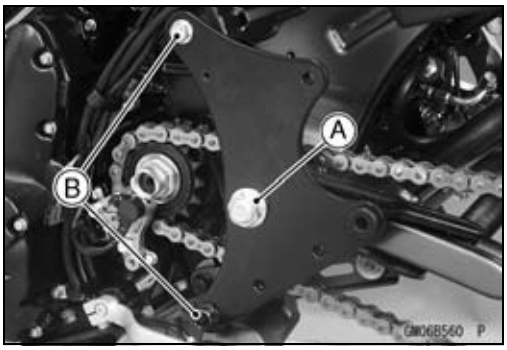

- Free the brake hose [A] from the clamps [B].
- For models equipped with an ABS, remove the rear wheel rotation sensor (see Rear Wheel Rotation Sensor Removal in the Brakes chapter).
- Remove:
  Rear Wheel (see Rear Wheel Removal in the Wheels/Tires chapter)
  Drive Chain (see Drive Chain Removal in the Final Drive chapter)

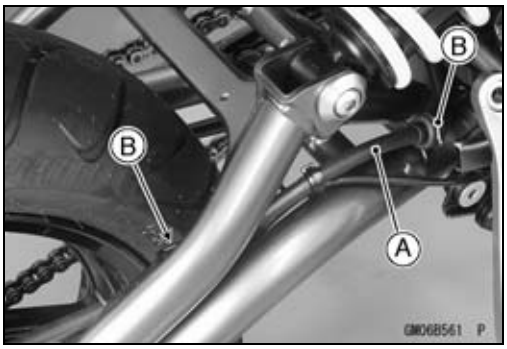

Swingarm

- Support the frame using the jack.

  Special Tool - Jack: 57001-1238

- Remove the following parts, and remove the swingarm.
  Rear Shock Absorber Mounting Bolt (Lower), Nut, Collar and Washer
  Swingarm Pivot Shaft Nut
  Swingarm Pivot Shaft

Swingarm Installation

- Installation is the reverse of removal.

○Apply grease to the lip of the oil seals [A].
○Be sure to install the oil seals and collar [B] to the swingarm.
[C] Left Side
[D] Right Side

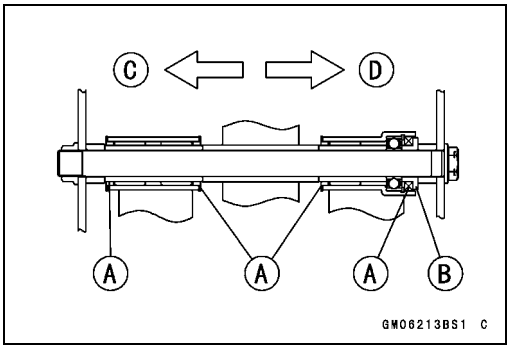

○Install the swingarm [A].
○By the following specified sequence, tighten the bolts and nuts.
○Tighten:

Torque - Swingarm Pivot Shaft Nut [B]: 108 N·m (11.0 kgf·m, 80 ft·lb)
Swingarm Bracket Bolts [C]: 44 N·m (4.5 kgf·m, 32 ft·lb)
Swingarm Bracket Bolt [D]: 44 N·m (4.5 kgf·m, 32 ft·lb)
Swingarm Bracket Bolt [E]: 59 N·m (6.0 kgf·m, 44 ft·lb)

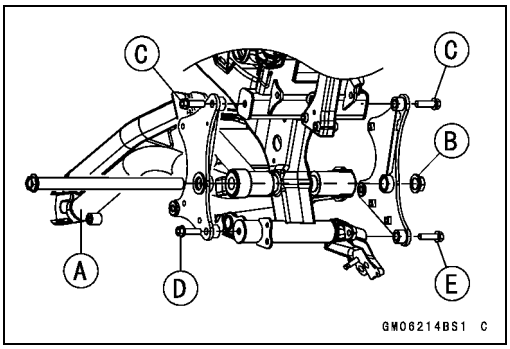

- Install the removed parts (see appropriate chapters).

Swingarm Bearing Removal

- Remove:
  Swingarm (see Swingarm Removal)
  Collar [A]
  Oil Seals [B]
  Sleeves [C]
  Circlip [D]

  Special Tool - Inside Circlip Pliers: 57001-143

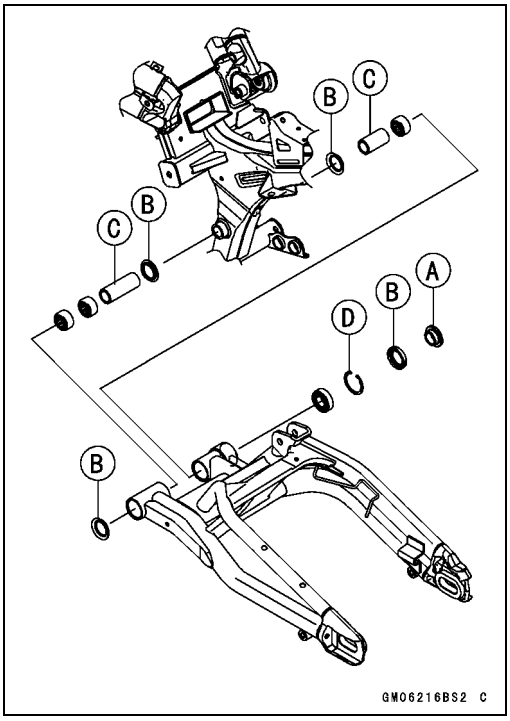

Swingarm

- Remove the ball bearing and needle bearings with oil seal & bearing remover [A].

  Special Tool - Oil Seal & Bearing Remover: 57001-1058

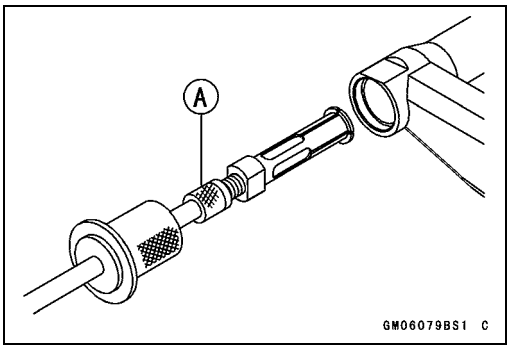

Swingarm Bearing Installation

- Replace the ball and needle bearings [A] with new ones.
- Install the ball and needle bearings so that the manufacturer's marks face out.

  Special Tools - Bearing Driver Set: 57001-1129
  Needle Bearing Driver, ϕ28 [B]: 57001-1610
  Spacerϕ28: 57001-1663

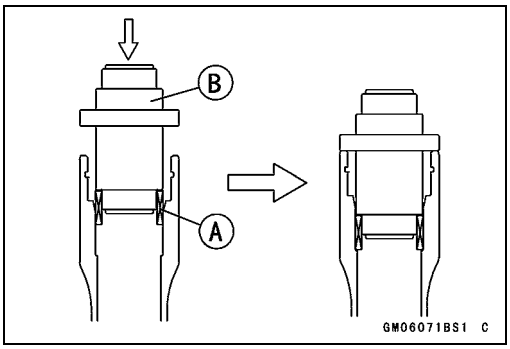

- Install the needle bearings [A], ball bearing [B] and oil seals [C] as shown.
  Circlip [D]
  42.5 mm (1.67 in.) [E]
  24 mm (0.94 in.) [F]
  41.5 mm (1.63 in.) [G]
  5.5 mm (0.22 in.) [H]
  Left Side [I]
  Right Side [J]

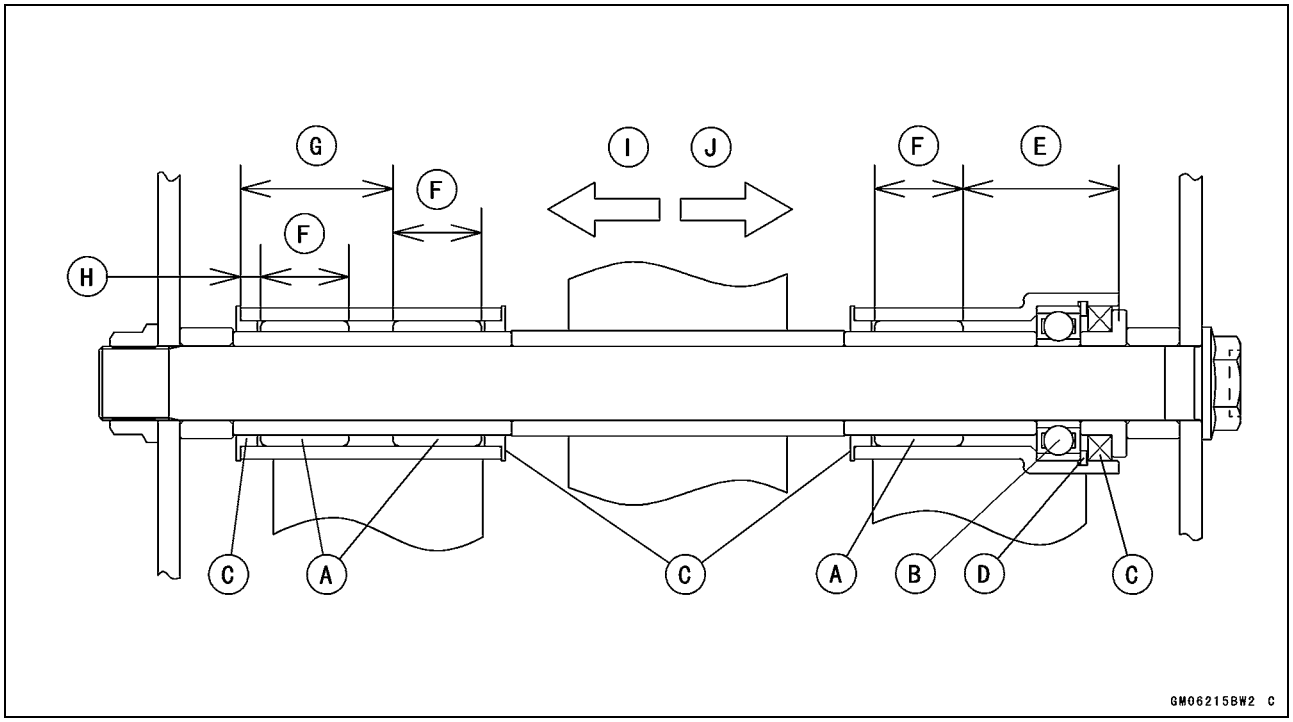

Swingarm

Swingarm Bearing, Sleeve Inspection

NOTICE

Do not remove the bearings for inspection. Removal may damage them.

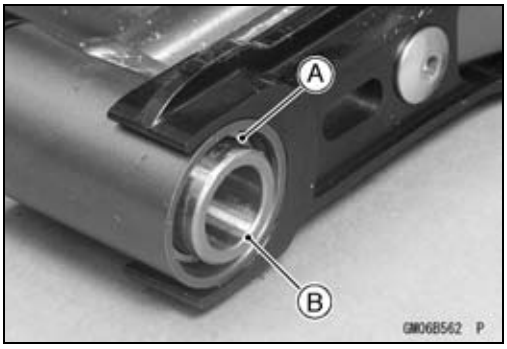

- Inspect the needle bearings [A] and ball bearing installed in the swingarm.

○The rollers and ball in a bearing normally wear very little, and wear is difficult to measure. Instead of measuring, visually inspect the bearing for abrasion, discoloration, or other damage.

★If the needle bearings and sleeves [B] show any sings of abnormal wear, discoloration, or damage, replace them as a set.

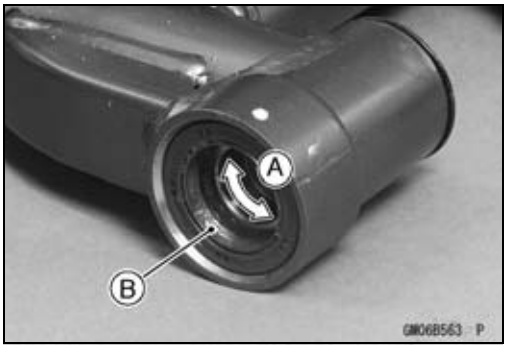

- Turn the bearing in the swingarm back and forth [A] while checking for plays, roughness, or binding.

★If bearing play, roughness, or binding is found, replace the bearing.

- Inspect the bearing seal [B] for tears or leakage.

★If the seal is torn or is leaking, replace the bearing.

Swingarm Bearing Lubrication

NOTE

○*Since the bearings are packed with grease and sealed, lubrication is not required.*

Chain Guide Inspection

- Refer to the Chain Guide Wear Inspection in the Periodic Maintenance chapter.

Steering

Table of Contents

Exploded View 14-2
Special Tools 14-4
Steering 14-5
    Steering Inspection 14-5
    Steering Adjustment 14-5
Steering Stem 14-6
    Stem, Stem Bearing Removal 14-6
    Stem, Stem Bearing Installation 14-7
    Steering Stem Bearing Lubrication 14-9
    Steering Stem Warp Inspection 14-9
    Stem Cap Deterioration, Damage Inspection 14-10
Handlebar 14-11
    Handlebar Removal 14-11
    Handlebar Installation 14-11

Exploded View

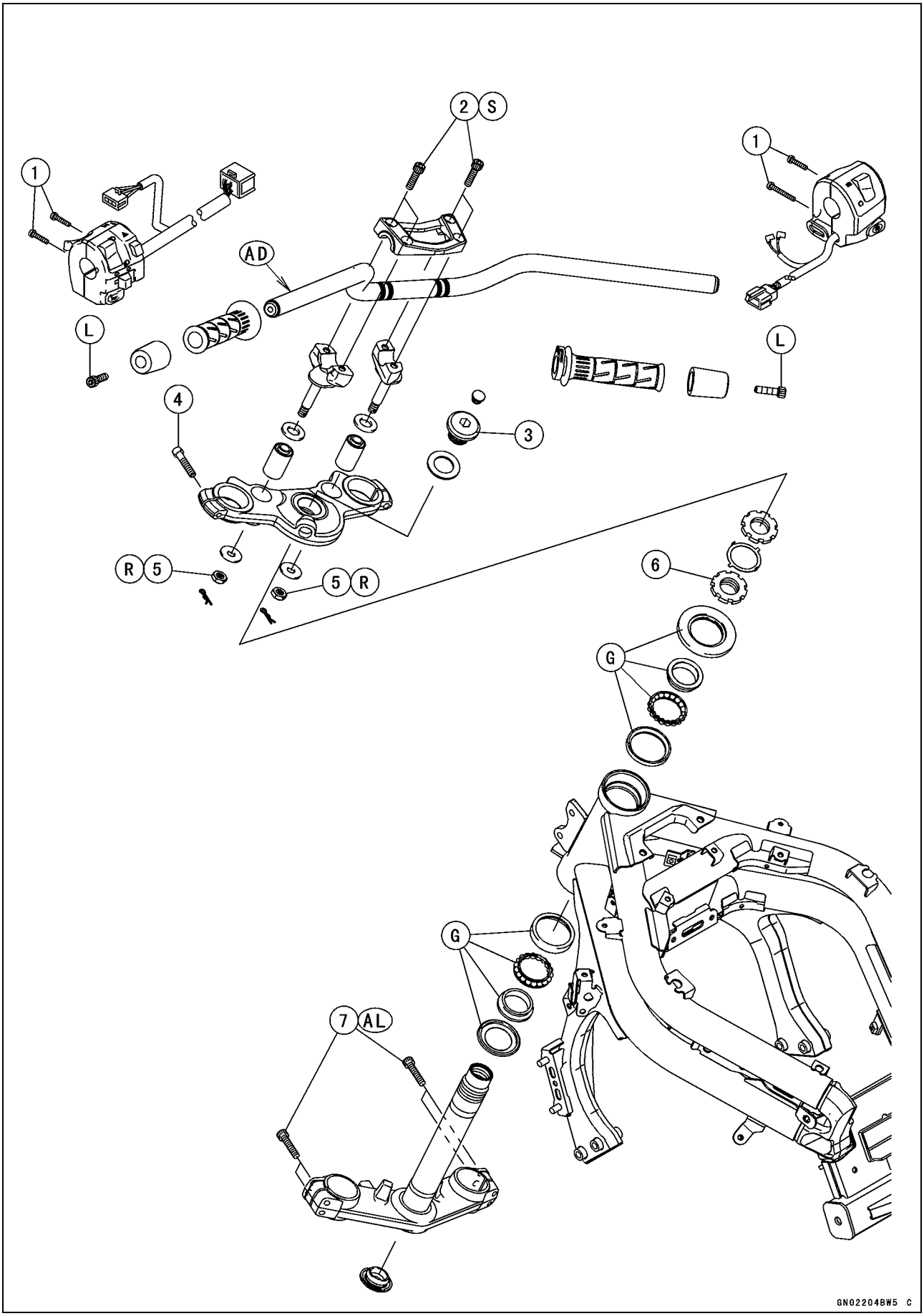

Exploded View

No.	Fastener	Torque			Remarks
		N·m	kgf·m	ft·lb	
1	Switch Housing Screws	3.5	0.36	31 in·lb	
2	Handlebar Holder Bolts	25	2.5	18	S
3	Steering Stem Head Bolt	108	11.0	80	
4	Front Fork Clamp Bolts (Upper)	20	2.0	15	
5	Handlebar Holder Mounting Nuts	34	3.5	25	R
6	Steering Stem Nut	20	2.0	15	
7	Front Fork Clamp Bolts (Lower)	20.5	2.1	15	AL

AD: Apply adhesive.
AL: Tighten the two clamp bolts alternately two times to ensure even tighten torque.
G: Apply grease.
L: Apply a non-permanent locking agent.
R: Replacement Parts
S: Follow the specified tightening sequence.

Special Tools

Head Pipe Outer Race Press Shaft:
57001-1075

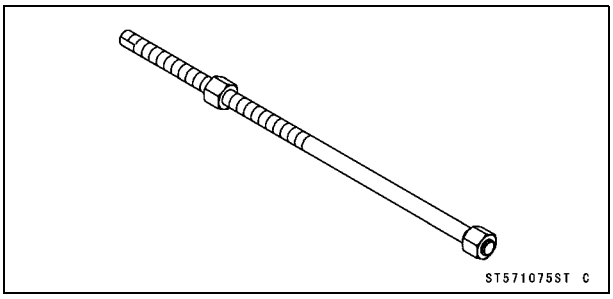

Steering Stem Nut Wrench:
57001-1100

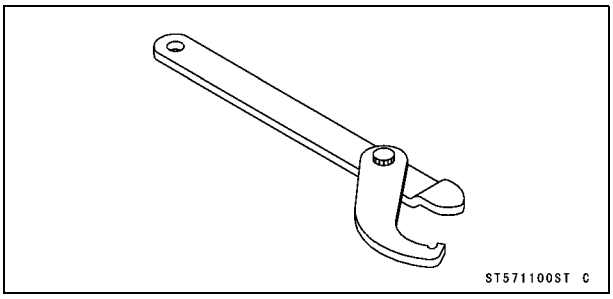

Bearing Driver Set:
57001-1129

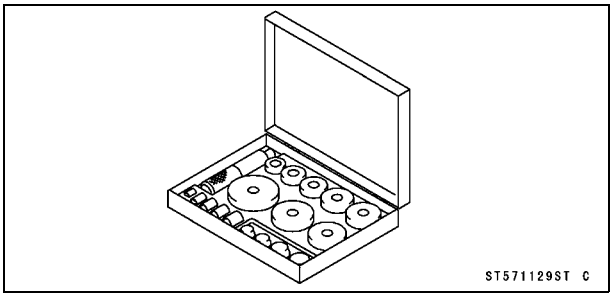

Steering Stem Bearing Driver, ϕ42.5:
57001-1344

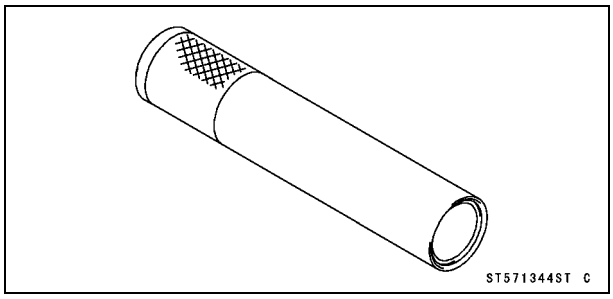

Steering Stem Bearing Driver Adapter, ϕ41.5:
57001-1345

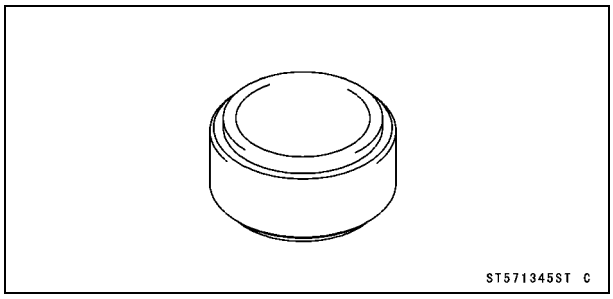

Head Pipe Outer Race Driver, ϕ55:
57001-1446

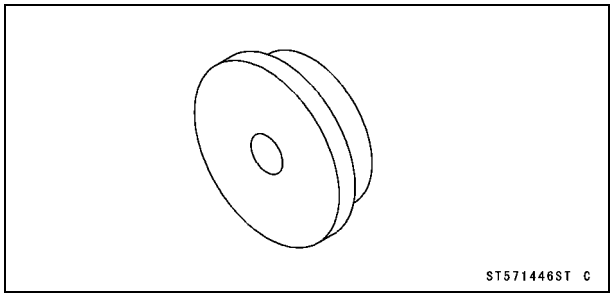

Steering

Steering Inspection

- Refer to the Steering Play Inspection in the Periodic Maintenance chapter.

Steering Adjustment

- Refer to the Steering Play Adjustment in the Periodic Maintenance chapter.

Steering Stem

Stem, Stem Bearing Removal

- Remove:
  Handlebar (see Handlebar Removal)
  Headlight Unit (see Headlight Unit Removal in the Electrical System chapter)
  Front Wheel (see Front Wheel Removal in the Wheels/Tires chapter)
  Front Forks (see Front Fork Removal in the Suspension chapter)

- Open the clamps [A].
- Remove:
  Bolts and Nuts [B]
  Bracket [C]
  Steering Stem Head [D] (see Steering Play Adjustment in the Periodic Maintenance chapter)

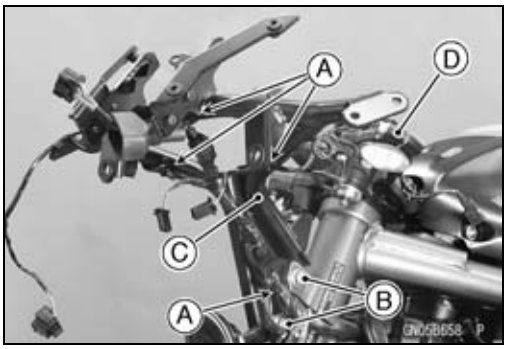

- Open the clamp [A].
- Remove:
  Horn Lead Terminals [B] (Disconnect)
  Bolts [C]
  Horn Bracket [D]

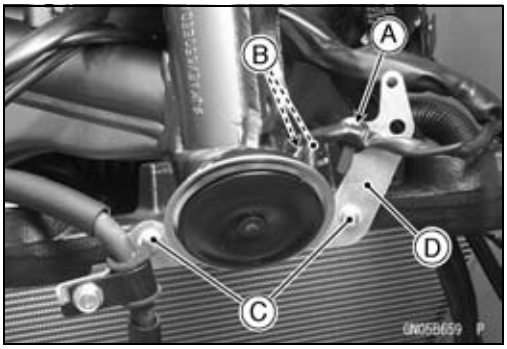

- Bend the claws [A] of claw washer straighten.
- Remove the steering stem locknut [B].

  Special Tool - Steering Stem Nut Wrench: 57001-1100
- Remove the claw washer.

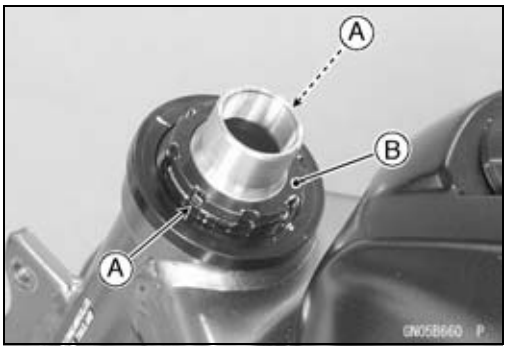

- Pushing up the stem base [A], remove the steering stem nut [B] and stem cap [C].

  Special Tool - Steering Stem Nut Wrench [D]: 57001-1100
- Remove the steering stem.

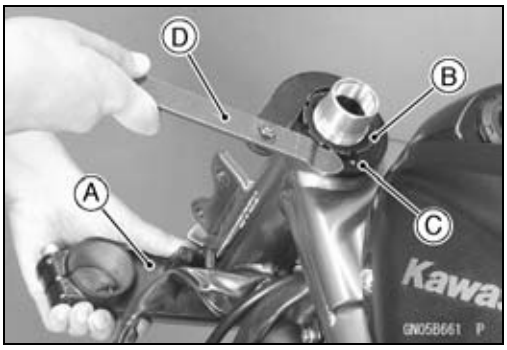

Steering Stem

- Remove:
  Upper Ball Bearing Inner Race [A]
  Upper Ball Bearing [B]

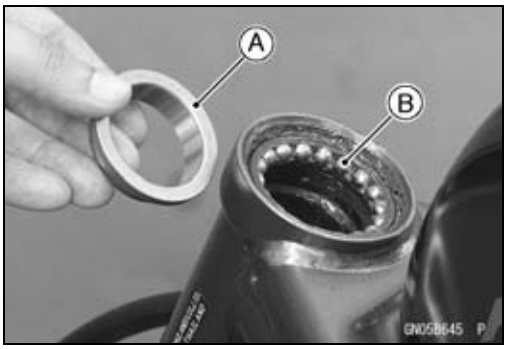

- To remove the ball bearing outer races [A] pressed into the head pipe [B], insert a bar [C] into the recesses of head pipe, and applying it to both recess alternately hammer it to drive the race out.

NOTE

○*If either steering stem bearing is damaged, it is recommended that both the upper and lower bearings (including outer races) should be replaced with new ones.*

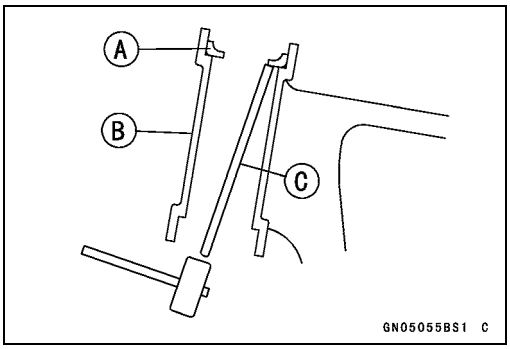

- Remove the lower ball bearing [A].

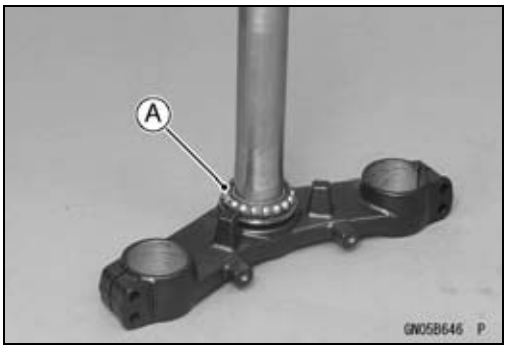

- Remove the lower ball bearing inner race [A] (with its oil seal) which is pressed onto the steering stem with a suitable commercially available chisel [B].

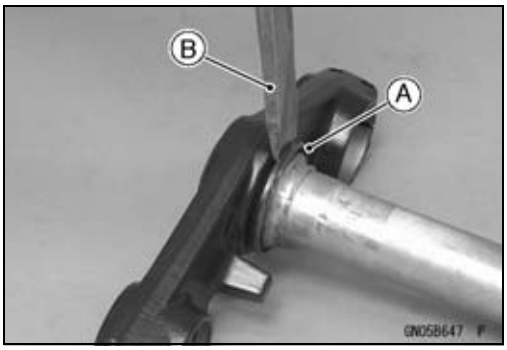

Stem, Stem Bearing Installation

- Replace the bearing outer races with new ones.
- Drive them into the head pipe at the same time.

Special Tools - Head Pipe Outer Race Press Shaft [A]: 57001-1075
Head Pipe Outer Race Driver, ϕ55 [B]: 57001-1446

- Apply grease to the outer races.

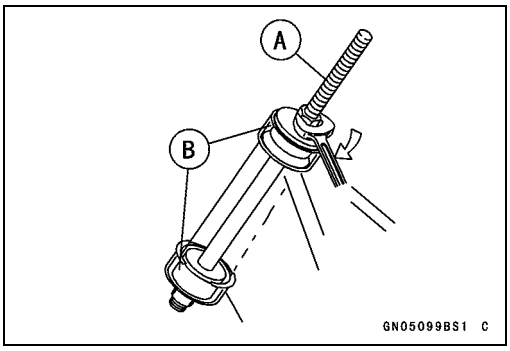

Steering Stem

- Replace the lower ball bearing inner race [A] and oil seal [B] with new ones.
- Apply grease to the following.
  Oil Seal
  Lower Ball Bearing Inner Race
- Install the oil seal on the steering stem, and drive the lower ball bearing inner race onto the stem.

Special Tools - Steering Stem Bearing Driver, ϕ42.5 [C]: 57001-1344
Steering Stem Bearing Driver Adapter, ϕ41.5 [D]: 57001-1345

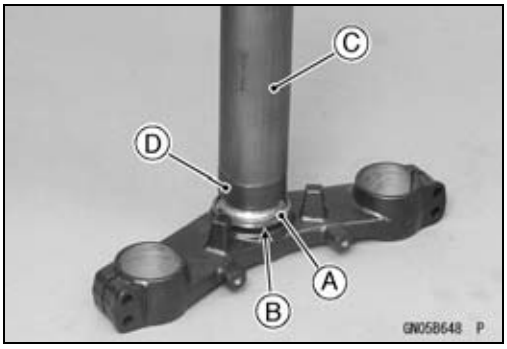

- Install the lower ball bearing [A] onto the stem.
- Apply grease to the following.
  Inner and Outer Races
  Lower Ball Bearing

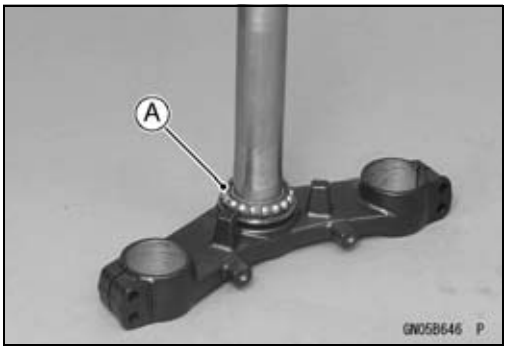

- Install the steering stem [A] through the head pipe, and install the upper ball bearing [B] and upper ball bearing inner race [C] on it.
- Apply grease to the stem cap [D].
- Install:
  Stem Cap
  Steering Stem Nut [E]

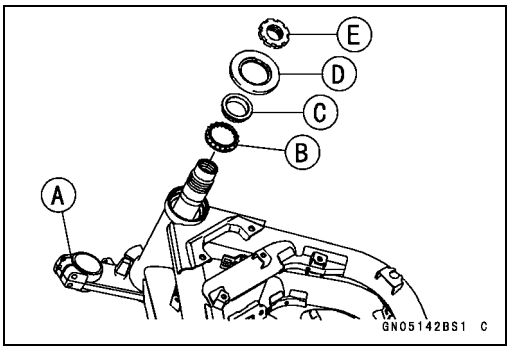

- Settle the bearings in place as follows.
- Tighten the steering stem nut with **55 N·m (5.6 kgf·m, 41 ft·lb)** of torque first, and loosen it a fraction of a turn until it turns lightly. Afterward tighten it again with specified torque using a steering stem nut wrench [A].

Special Tool - Steering Stem Nut Wrench: 57001-1100

Torque - Steering Stem Nut: 20 N·m (2.0 kgf·m, 15 ft·lb)

○Check that there is no play and the steering stem turns smoothly without rattles. If not, the steering stem bearings may be damaged.

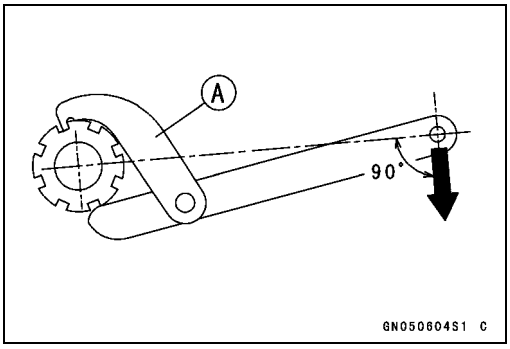

Steering Stem

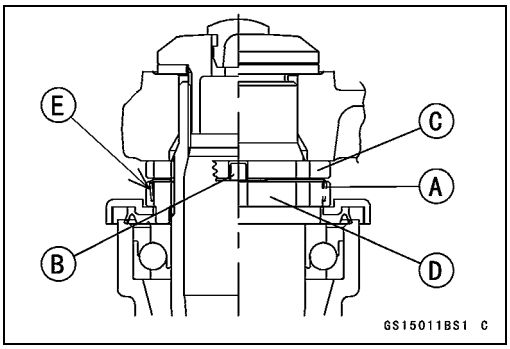

- Install the new claw washer [A] so that its bent claws [B] face upward, and engage the bent claws with the grooves of stem locknut [C].
- Hand tighten the stem locknut until it touches the claw washer.
- Hand tighten the stem locknut clockwise until the claws are aligned with the grooves (ranging from 2nd to 4th) of stem nut [D], and bend the 2 claws downward [E].
- Install the steering stem head.
- Install the washer, and temporarily tighten the steering stem head bolt.
- Install the front forks (see Front Fork Installation in the Suspension chapter).

NOTE

○*Tighten the upper front fork clamp bolts first, next the stem head bolt, last the lower front fork clamp bolts.*
○*Tighten the two lower front fork clamp bolts alternately two times to ensure even tightening torque.*

Torque - Front Fork Clamp Bolts (Upper): 20 N·m (2.0 kgf·m, 15 ft·lb)
Steering Stem Head Bolt: 108 N·m (11.0 kgf·m, 80 ft·lb)
Front Fork Clamp Bolts (Lower): 20.5 N·m (2.1 kgf·m, 15 ft·lb)

⚠ WARNING

If the handlebar does not turn to the steering stop it may cause an accident resulting in injury or death. Be sure the cables,harnesses and hoses are routed properly and do not interfere with handlebar movement (see Cable, Wire, and Hose Routing section in the Appendix chapter).

- Install the removed parts (see appropriate chapters).

Steering Stem Bearing Lubrication

- Refer to the Steering Stem Bearing Lubrication in the Periodic Maintenance chapter.

Steering Stem Warp Inspection

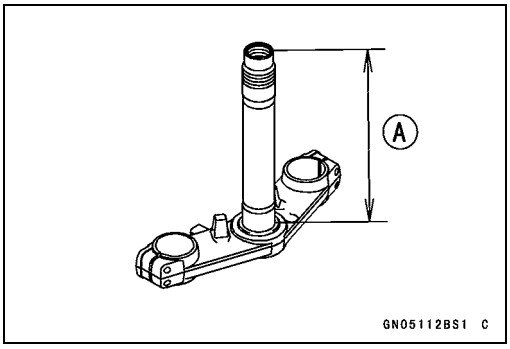

- Whenever the steering stem is removed, or if the steering can not be adjusted for smooth action, check the steering stem for straightness.

★If the steering stem [A] is bent, replace it.

Steering Stem

Stem Cap Deterioration, Damage Inspection

● Inspect the stem cap.

★Replace the stem cap if its oil seal [A] shows damage.

Handlebar

Handlebar Removal

● Remove:
Clutch Lever Clamp Bolts [A] and Washers
Clutch Lever Assembly [B]
Left Switch Housing [C]
Handlebar Weight [D]
Left Handlebar Grip [E]

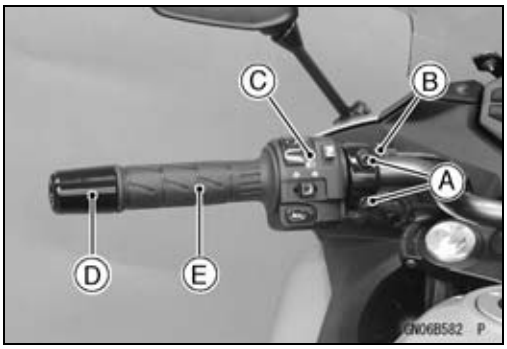

● Remove:
Front Master Cylinder [A] (see Front Master Cylinder Removal in the Brakes chapter)
Right Switch Housing [B]
Handlebar Weight [C]
Throttle Grip [D]

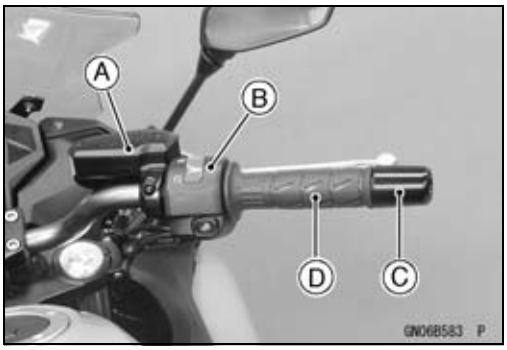

● Remove:
Handlebar Holder Bolts [A]
Upper Handlebar Holder [B]
Handlebar [C]

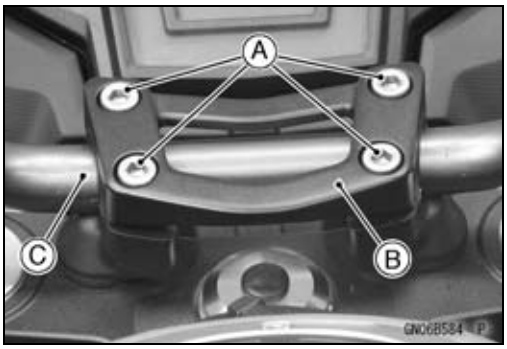

● Remove the lower handlebar holders [A] as necessary.
○Remove:
Snap Pins [B]
Handlebar Holder Mounting Nuts [C]
Washers [D]
Lower Handlebar Holders
Dampers

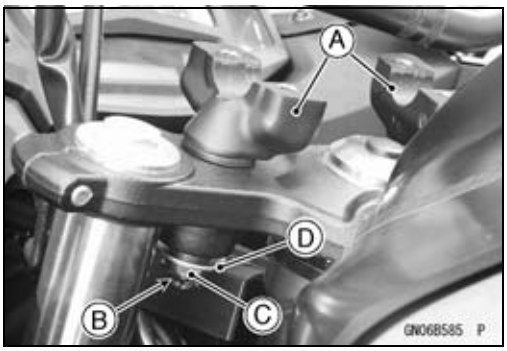

Handlebar Installation

★If the lower handlebar holders were removed, install them.
○Replace the handlebar holder mounting nuts with new ones.
○Install:
Dampers
Lower Handlebar Holders
Washers
Handlebar Holder Mounting Nuts
○Tighten:

Torque - Handlebar Holder Mounting Nuts: 34 N·m (3.5 kgf·m, 25 ft·lb)

○Install the snap pins.

Handlebar

- Set the handlebar onto the lower handlebar holders.

○Align the upper punch mark [A] on the handlebar with the corner edge [B] of the lower handlebar holder.

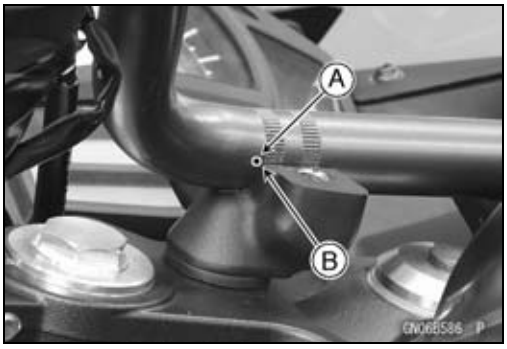

- Install the upper handlebar holder [A].
- Tighten the front handlebar holder bolts [B] first, and then the rear handlebar holder bolts [C]. There will be a gap [D] at the rear part of the holder after tightening.

Torque - Handlebar Holder Bolts: 25 N·m (2.5 kgf·m, 18 ft·lb)

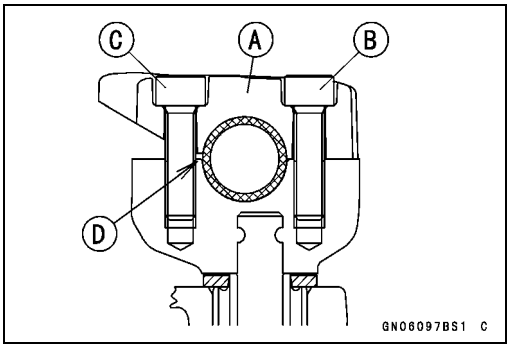

- Install the clutch lever (see Clutch Lever Installation in the Clutch chapter).
- Clean off any oil or dirt and apply adhesive cement to the handlebar [A] as shown.
  [B] 125 mm (4.92 in.)
- Apply a non-permanent locking agent to the left handlebar weight bolt and tighten it.

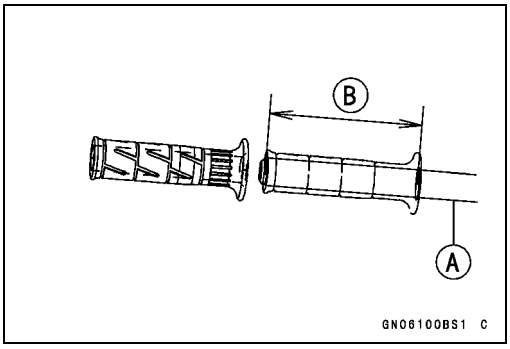

- Install the left switch housing.

○Fit the projection [A] into a hole [B] on the handlebar.

- Tighten:

Torque - Switch Housing Screws: 3.5 N·m (0.36 kgf·m, 31 in·lb)

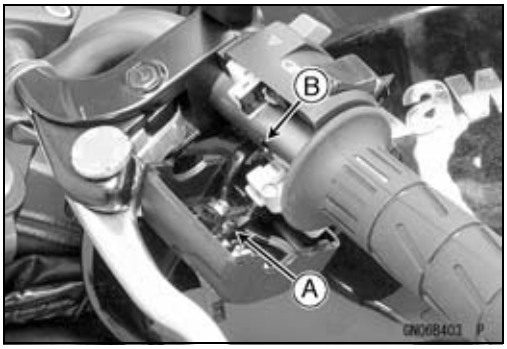

Handlebar

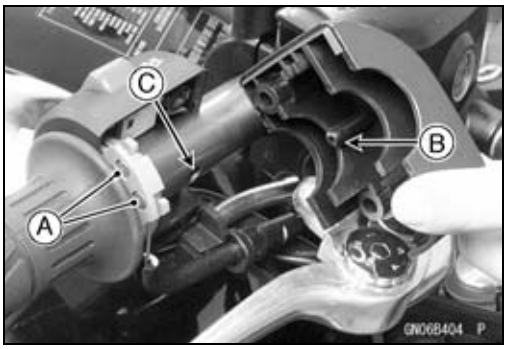

- Install:
  Throttle Grip
  Throttle Cable Tips [A]
  Right Switch Housing

○Fit the projection [B] into a hole [C] on the handlebar.
○The lower switch housing screw is longer than the upper one.

- Tighten:

  Torque - Switch Housing Screws: 3.5 N·m (0.36 kgf·m, 31 in·lb)

- Install the front master cylinder (see Front Master Cylinder Installation in the Brakes chapter).
- Apply a non-permanent locking agent to the right handlebar weight bolt and tighten it.
- Run the leads, cables, and hoses correctly (see Cable, Wire, and Hose Routing section in the Appendix chapter).
- Adjust the throttle grip free play (see Throttle Control System Inspection in the Periodic Maintenance chapter).

Frame

Table of Contents

Exploded View 15-3
Seats 15-10
Rear Seat Removal 15-10
Rear Seat Installation 15-10
Front Seat Removal 15-10
Front Seat Installation 15-10
Fairings 15-11
Upper Inner Fairing Removal 15-11
Upper Inner Fairing Installation 15-11
Lower Inner Fairing Removal 15-12
Lower Inner Fairing Installation 15-13
Middle Fairing Removal 15-13
Middle Fairing Installation 15-14
Middle Fairing Disassembly 15-15
Middle Fairing Assembly 15-15
Lower Fairing Bracket Removal 15-16
Lower Fairing Bracket Installation 15-16
Upper Fairing Removal 15-16
Upper Fairing Installation 15-16
Seat Covers 15-17
Front Seat Cover Removal 15-17
Front Seat Cover Installation 15-17
Rear Seat Cover Removal 15-17
Rear Seat Cover Installation 15-18
Fenders 15-19
Front Fender Removal 15-19
Front Fender Installation 15-19
Flap Removal 15-19
Flap Installation 15-19
Rear Fender Removal 15-20
Rear Fender Installation 15-20
Frame 15-21
Frame Inspection 15-21
Battery Case 15-22
Battery Case Removal 15-22
Battery Case Installation 15-22
Footpeg Stay 15-23
Footpeg Stay Removal 15-23
Footpeg Stay Installation 15-23
Windshield 15-24
Windshield Removal 15-24
Windshield Installation 15-24
Sidestand 15-25
Sidestand Removal 15-25
Sidestand Installation 15-25
Frame Cover 15-26
Frame Cover Removal 15-26
Frame Cover Installation 15-26
Side Cover Removal 15-26
Side Cover Installation 15-26

Rear View Mirrors 15-27
Rear View Mirror Removal 15-27
Rear View Mirror Installation 15-27

Exploded View

This page intentionally left blank.

Exploded View

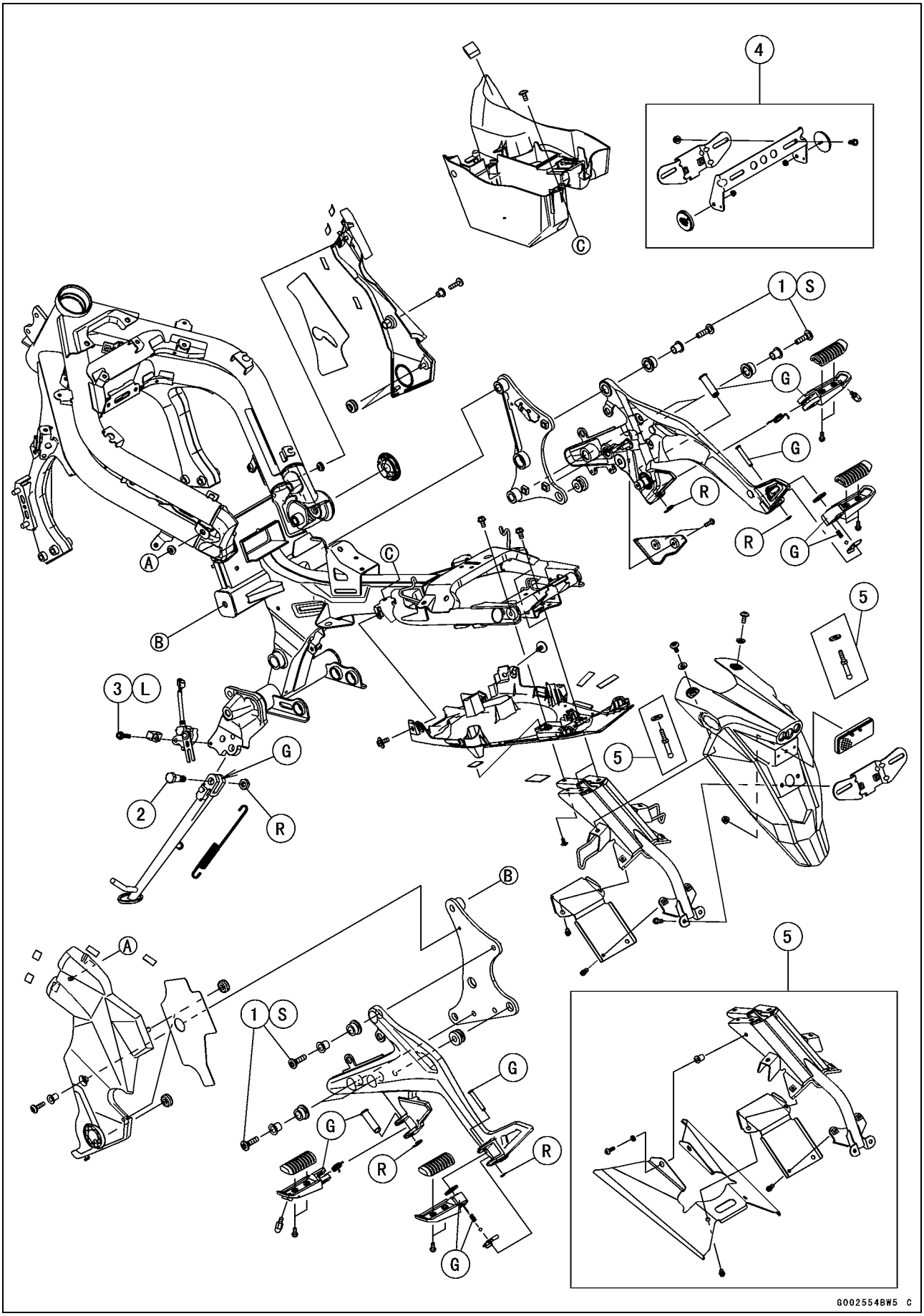

Exploded View

No.	Fastener	Torque			Remarks
		N·m	kgf·m	ft·lb	
1	Footpeg Stay Bolts	25	2.5	18	S
2	Sidestand Bolt	44	4.5	32	
3	Sidestand Switch Bolt	8.8	0.90	78 in·lb	L

4. US, CA, CAL and AU Models
5. AU Model

G: Apply grease.
L: Apply a non-permanent locking agent.
R: Replacement Parts
S: Follow the specified tightening sequence.

Exploded View

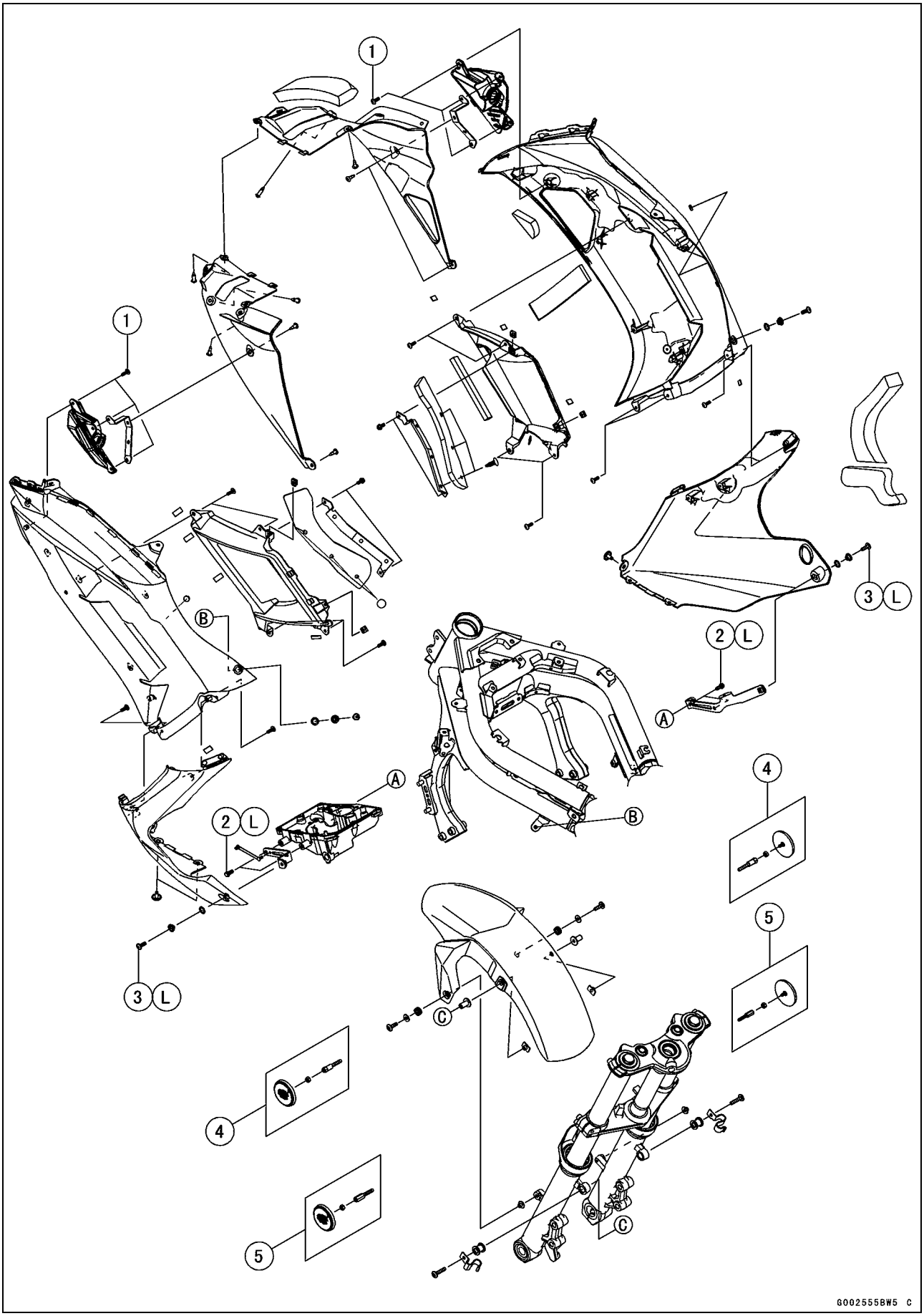

Exploded View

No.	Fastener	Torque			Remarks
		N·m	kgf·m	ft·lb	
1	Front Turn Signal Light Mounting Screws	1.2	0.12	11 in·lb	
2	Lower Fairing Bracket Bolts	12	1.2	106 in·lb	L
3	Lower Fairing Mounting Bolts	15	1.5	11	L

4. AU Model
5. US, CA and CAL Models
6. ID Model

L: Apply a non-permanent locking agent.

Exploded View

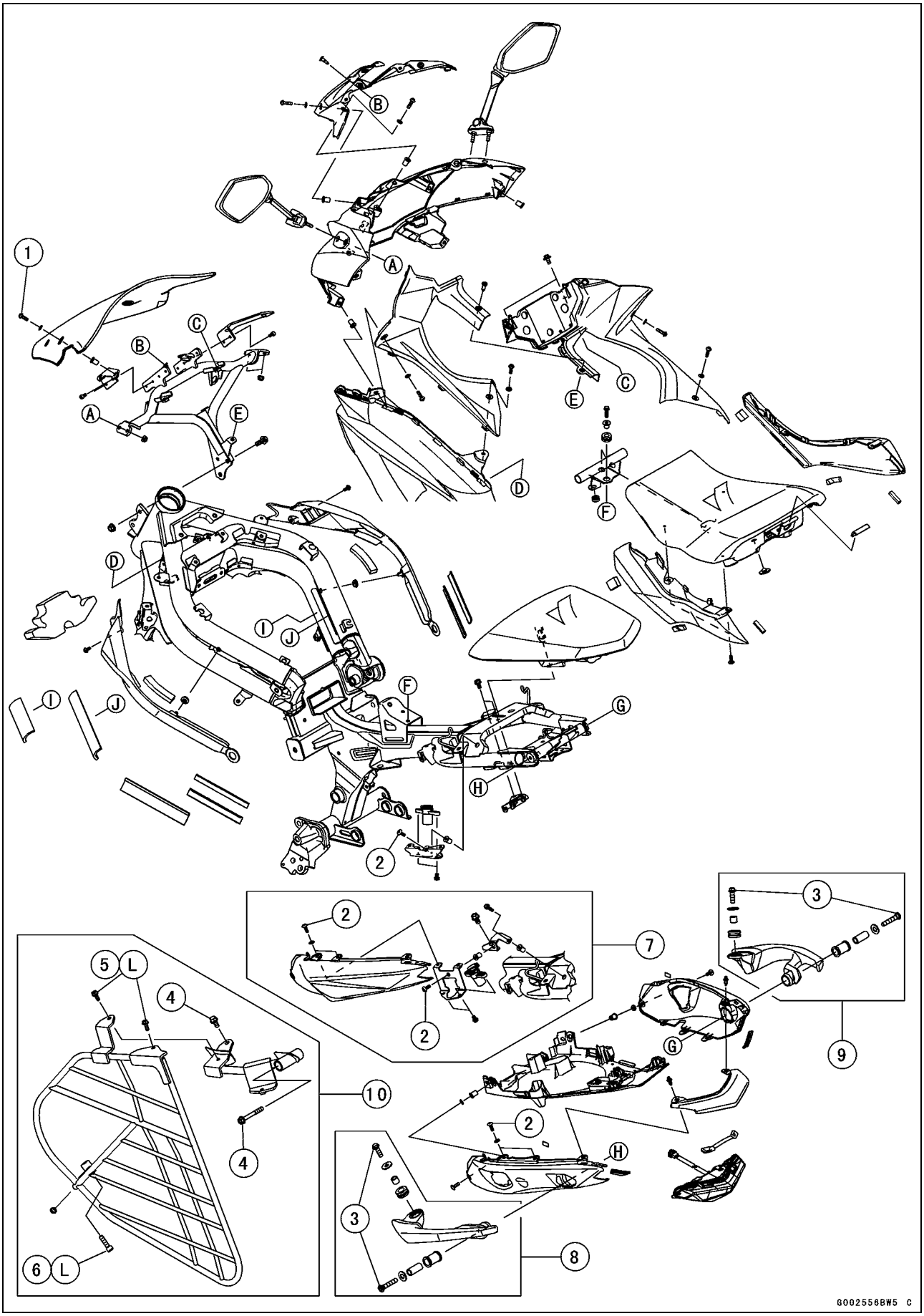

Exploded View

No.	Fastener	Torque			Remarks
		N·m	kgf·m	ft·lb	
1	Windshield Mounting Bolts	4.2	0.43	37 in·lb	
2	Seat Lock Mounting Screws	0.4	0.04	4 in·lb	
3	Grab Rail Mounting Bolts	25	2.5	18	
4	Upper Saree Guard Mounting Bolts	25	2.5	18	
5	Saree Guard Bracket Bolts	15	1.5	11	L
6	Lower Saree Guard Mounting Bolt	27	2.8	20	L

7. US, CA and CAL Models
8. Other than US, CA, CAL and IN Models
9. Other than US, CA and CAL Models
10. IN Model

Seats

Rear Seat Removal

- Insert the ignition switch key [A] into the seat lock.
- Turn the key clockwise, and pull up the front part of the seat [B].
- Remove the seat forward.

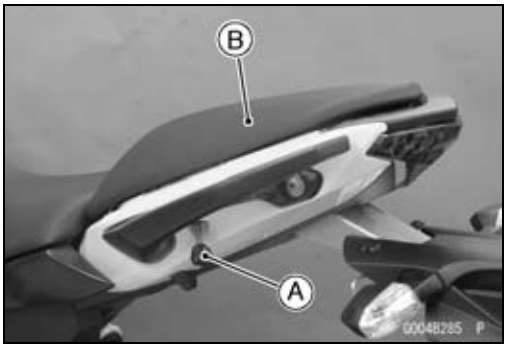

Rear Seat Installation

- Insert the seat hook [A] into the bracket hole [B].
- Push down the front part of the seat until the lock clicks.

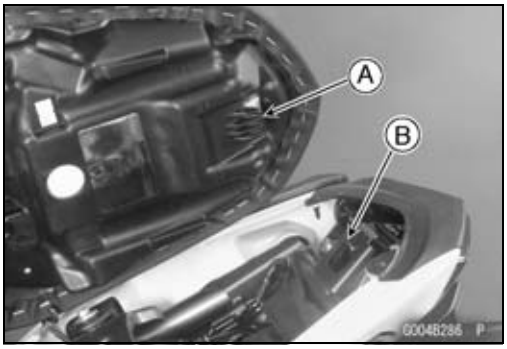

Front Seat Removal

- Remove the rear seat (see Rear Seat Removal).
- Slide the front seat [A] rearward [B] and then pull the front part of the seat upward [C] to remove it.

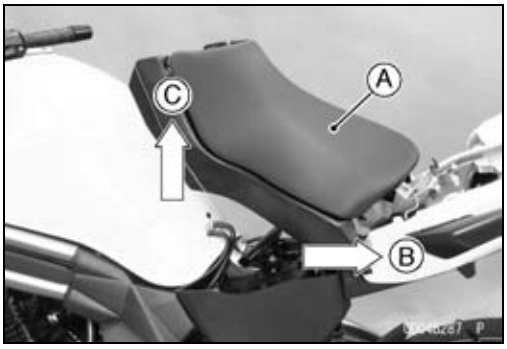

Front Seat Installation

- Slide the front seat [A] rearward [B] to position it on the frame.
- Slide the front seat forward [C] to engage the front seat hook [D] with the bracket [E].

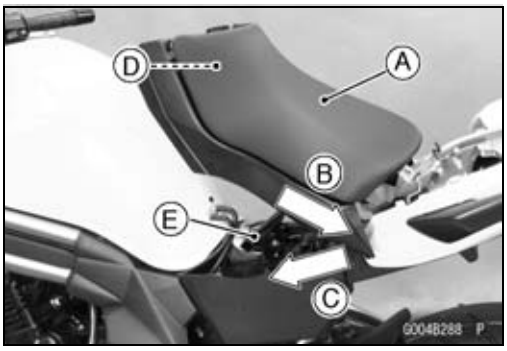

Fairings

Upper Inner Fairing Removal

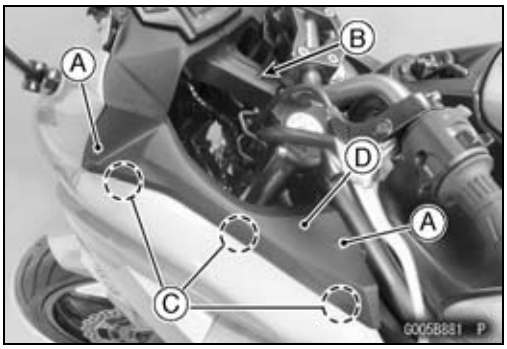

- Remove:
  Windshield (see Windshield Removal)
  Bolts [A] and Washers
  Quick Rivet [B]
- Clear the hook portions [C].
- Remove the left upper inner fairing [D].

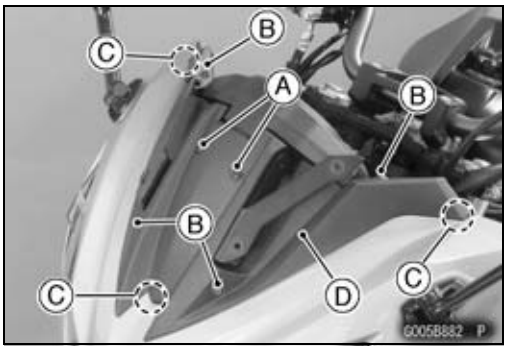

- Remove:
  Quick Rivets [A]
  Bolts [B] and Washers
- Clear the hook portions [C].
- Remove the meter cover [D].

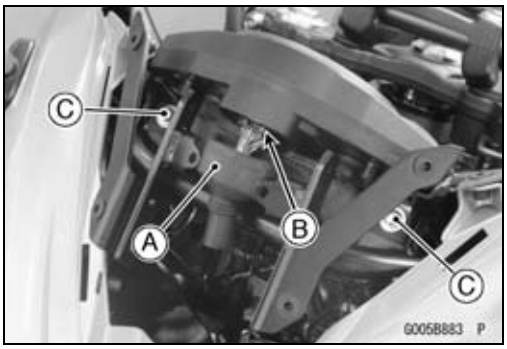

- Slide out the dust cover [A], and disconnect the connector [B].
- Remove the bolts [C].

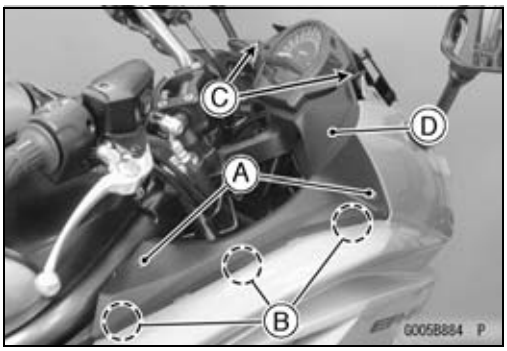

- Remove the bolts [A] and washers.
- Clear the hook portions [B].
- Remove:
  Wellnuts [C]
  Right Upper Inner Fairing [D] with Meter Unit

Upper Inner Fairing Installation

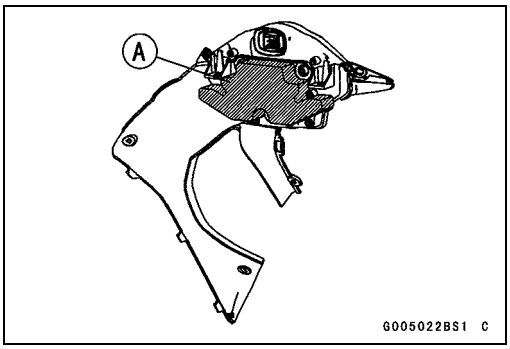

- Installation is the reverse of removal.

○Be sure to install the damper [A] on the right upper inner fairing.

Fairings

○Insert the hook portion [A] into the hole [B] on the upper fairing.
○Insert the hook portions [C] into the slits [D] on the upper fairing on both sides.

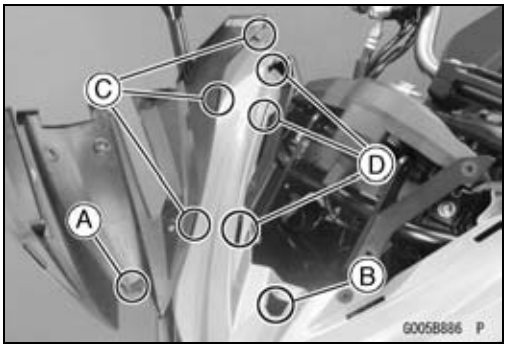

○Insert the hook portions [A] into the slits [B] on the middle fairing.

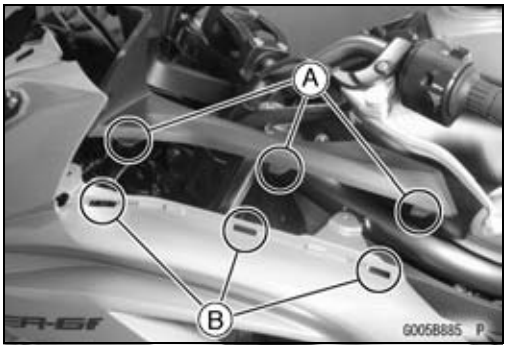

○While holding the portion [A], install the bolt [B] and washer.

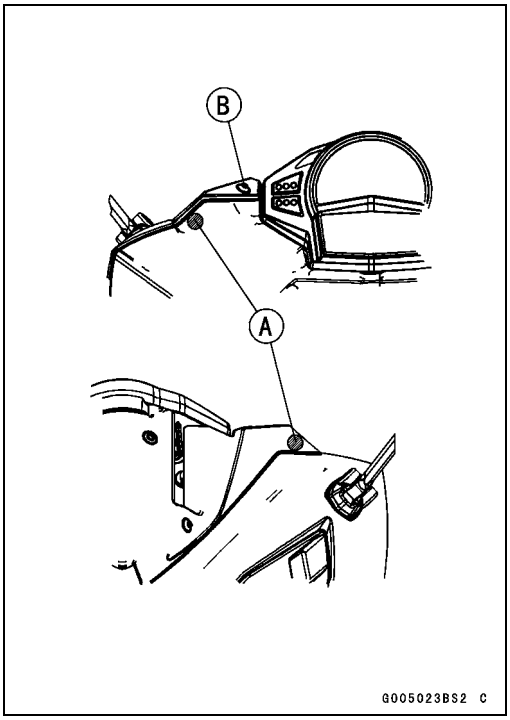

Lower Inner Fairing Removal

- Clear the front turn signal light leads from the clamps [A].
- Remove:
  Quick Rivets [B]
  Lower Inner Fairings [C]

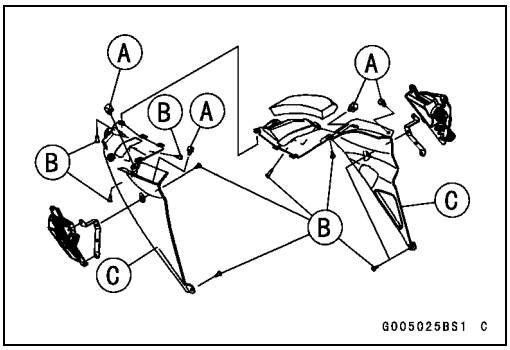

Fairings

Lower Inner Fairing Installation

- Installation is the reverse of removal.

○Be sure to install the damper [A] on the right lower inner fairing.

○Run the leads correctly (see Cable, Wire, and Hose Routing section in the Appendix chapter).

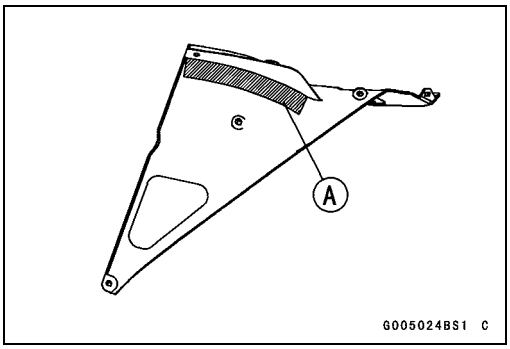

Middle Fairing Removal

- Remove:
  Upper Inner Fairing (see Upper Inner Fairing Removal)
  Lower Inner Fairing (see Lower Inner Fairing Removal)
- Disconnect the turn signal light lead connector [A].

- Remove the quick rivets [A] from the lower fairings.

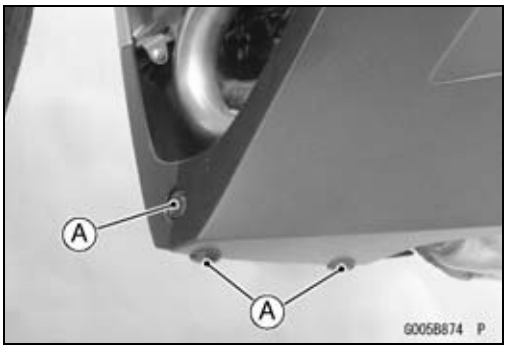

- Remove the bolts [A] and washers.
- Pull the middle fairing [B] outward to clear the stopper [C].
- Pull the middle fairing rearward to clear the hook portions [D], and remove it with the lower fairing [E].

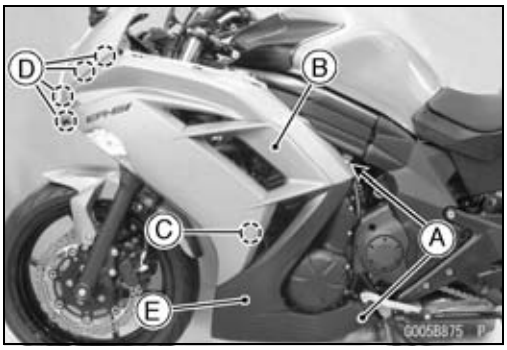

Middle Fairing Installation

● Installation is the reverse of removal.

○Be sure to install the pads [A] on the right middle fairing.

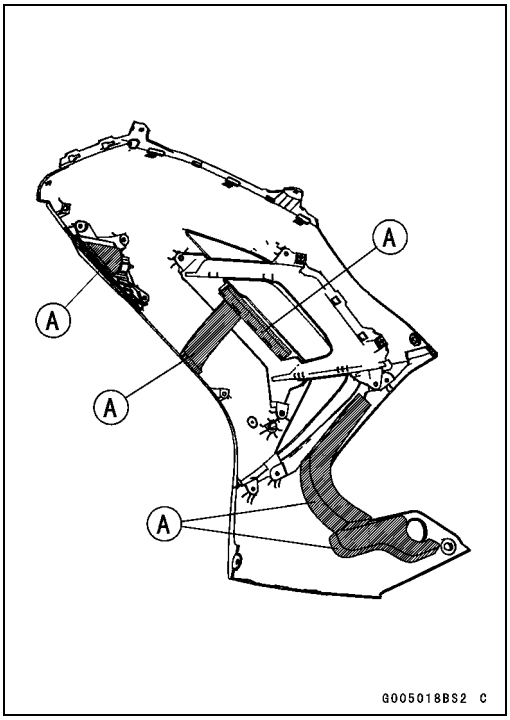

○Be sure to install the dampers on the left and right middle fairings.
Outside [A]
Inside [B]

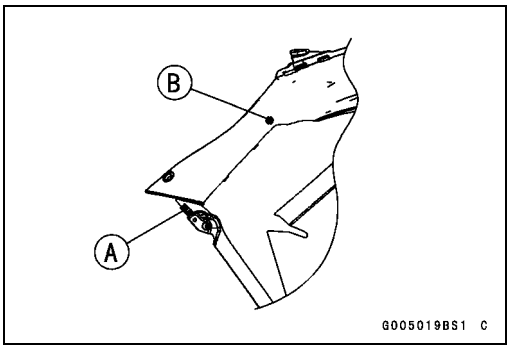

○Run the cables and leads correctly (see Cable, Wire, and Hose Routing section in the Appendix chapter).

○Insert the hook portions [A] into the slits [B] on the middle fairing.

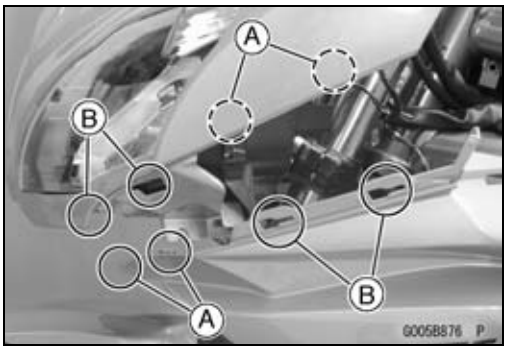

Fairings

○Tuck the pads [A] on the left and right middle fairings [B] under the frame [C].
○Apply a non-permanent locking agent to the threads of the lower fairing mounting bolts.
○Tighten:

Torque - Lower Fairing Mounting Bolts: 15 N·m (1.5 kgf·m, 11 ft·lb)

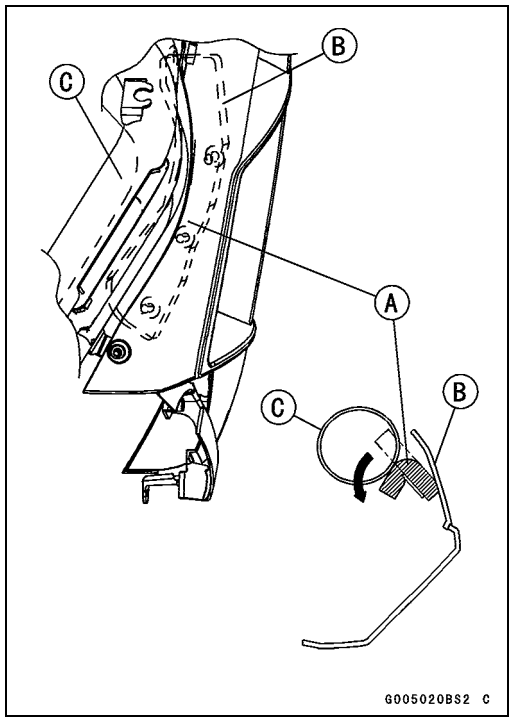

Middle Fairing Disassembly

● Remove the middle fairing [A] with the lower fairing [B] (see Middle Fairing Removal).
● Remove:
Screws [C]
Lower Fairing

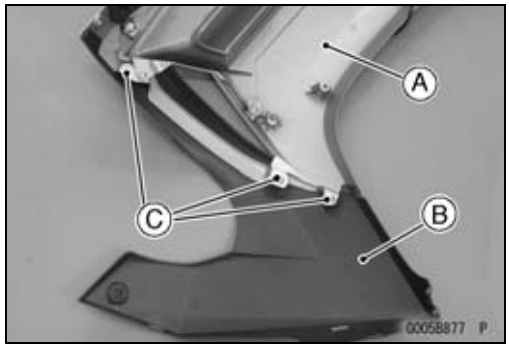

● Remove:
Screws [A]
Front Turn Signal Light [B]

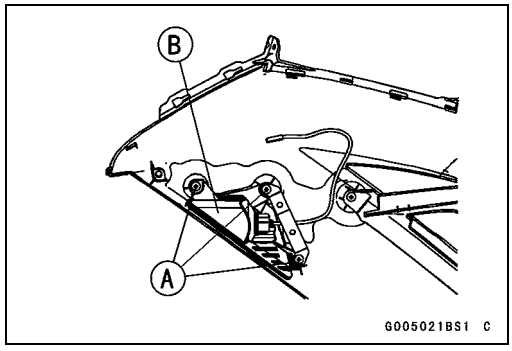

Middle Fairing Assembly

● Assembly is the reverse of disassembly.
○Tighten:

Torque - Front Turn Signal Light Mounting Screws: 1.2 N·m (0.12 kgf·m, 11 in·lb)

Fairings

Lower Fairing Bracket Removal

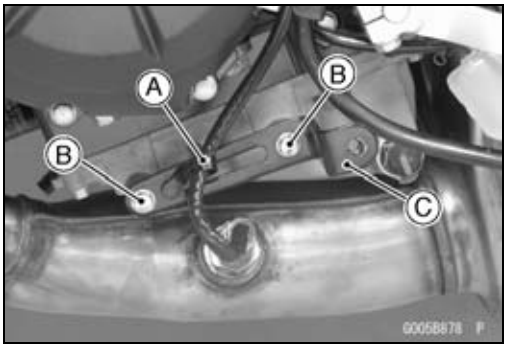

- Remove:
  Middle Fairings (see Middle Fairing Removal)
  Clamp [A] (Oxygen Sensor Equipped Models)
  Lower Fairing Bracket Bolts [B]
  Lower Fairing Bracket (Left) [C]

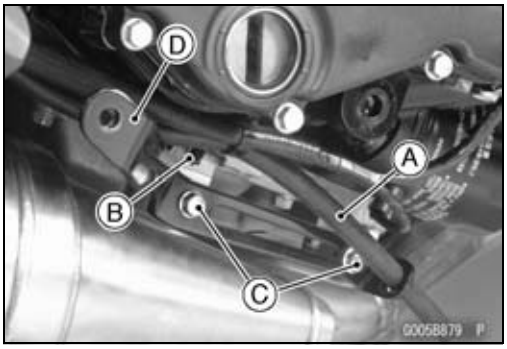

- Remove:
  Reserve Tank Overflow Hose [A]
  Clamp [B]
  Lower Fairing Bracket Bolts [C]
  Lower Fairing Bracket (Right) [D]

Lower Fairing Bracket Installation

- Installation is the reverse of removal.

○Run the leads and hose correctly (see Cable, Wire, and Hose Routing section in the Appendix chapter).

○Apply a non-permanent locking agent to the threads of the lower fairing bracket bolts and tighten them.

Torque - Lower Fairing Bracket Bolts: 12 N·m (1.2 kgf·m, 106 in·lb)

Upper Fairing Removal

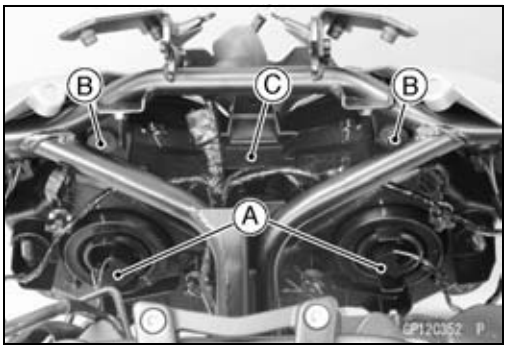

- Remove:
  Middle Fairings (see Middle Fairing Removal in the Frame chapter)
  City Light Connectors (Disconnect)
  Headlight Connectors [A] (Disconnect)
  Bolts [B]
  Headlight Unit [C]

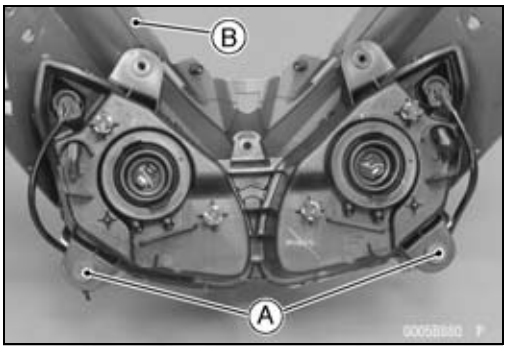

- Remove:
  Bolts [A]
  Upper Fairing [B]

Upper Fairing Installation

- Installation is the reverse of removal.

Seat Covers

Front Seat Cover Removal

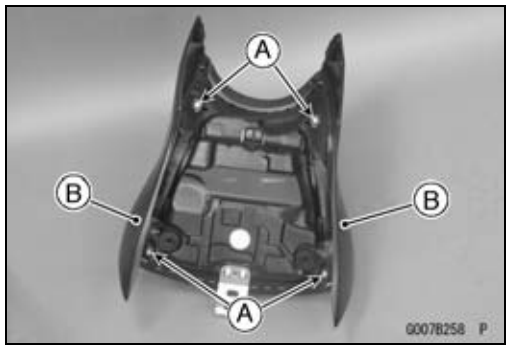

- Remove:
  Front Seat (see Front Seat Removal)
  Screws [A]
  Front Seat Covers [B]

Front Seat Cover Installation

- Installation is the reverse of removal.

Rear Seat Cover Removal

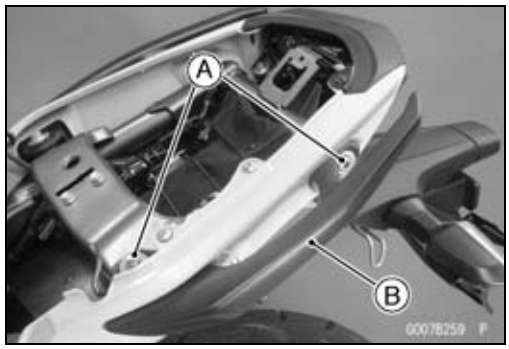

- Remove:
  Front Seat (see Front Seat Removal)
  Bolts [A] and Washers (Left and Right)
  Grab Rails [B] (Left and Right) (Other than US, CA and CAL Models)

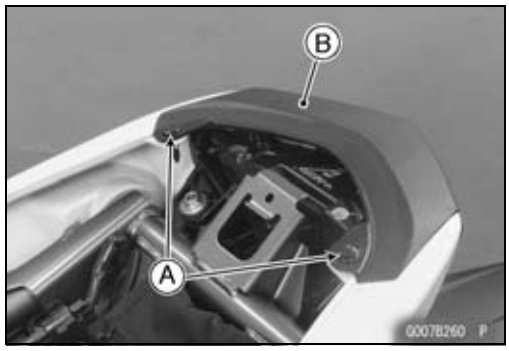

- Remove:
  Quick Rivets [A]
  Center Seat Cover [B]

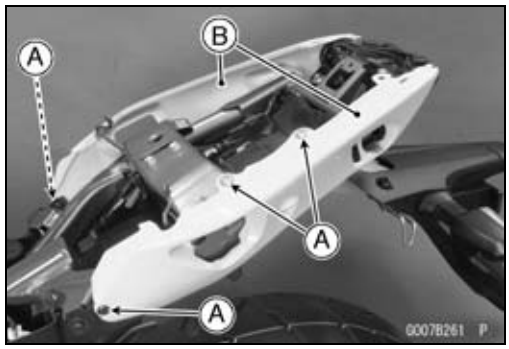

- Remove:
  Screws [A] and Washers
  Rear Seat Covers [B]

Seat Covers

Rear Seat Cover Installation

● Installation is the reverse of removal.

○Be sure to install the pads [A] on the left and right rear seat covers.

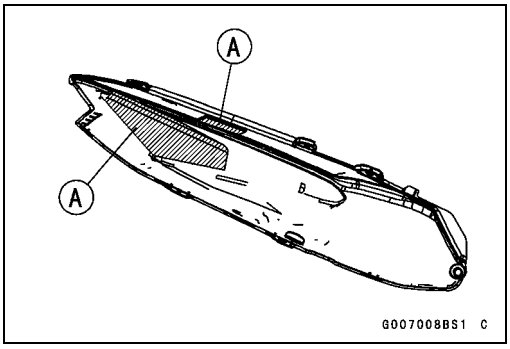

○Install the rear seat cover [A] so that the ribs [B] fit inside the rear fender [C].

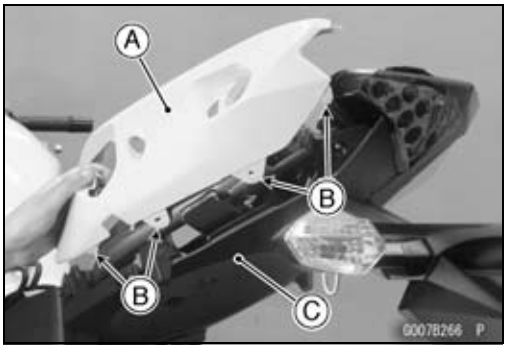

○Install the center seat cover [A] so that the projections [B] fit into the slots [C].

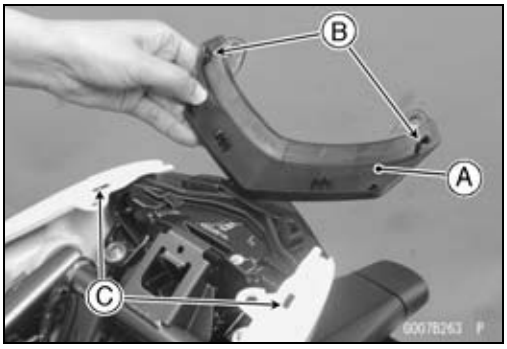

○For other than US, CA and CAL models, install the grab rails and tighten the bolts.

Torque - Grab Rail Mounting Bolts: 25 N·m (2.5 kgf·m, 18 ft·lb)

Fenders

Front Fender Removal

- Remove:
  Bolts [A] and Washers (Left and Right)
  Bolts [B] (Left and Right)
  Front Fender [C]

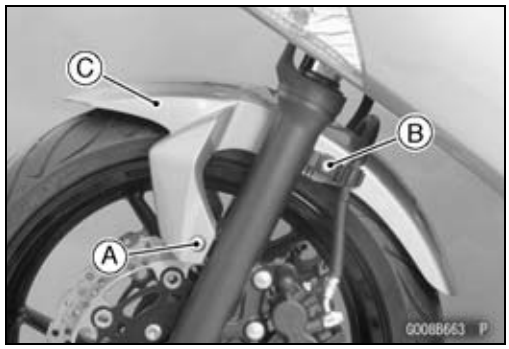

Front Fender Installation

- Install the front fender [A] together with the brake hose clamps [B] on both sides.

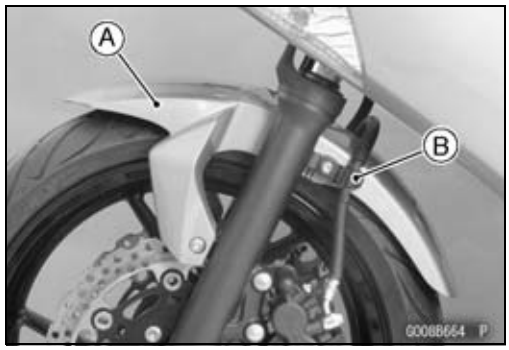

Flap Removal

- Remove the rear seat (see Rear Seat Removal).
- Slide out the dust cover [A].
- Disconnect:
  License Plate Light Lead Connector [B]
  Turn Signal Light Lead Connectors [C]

○Clear the leads from the hook [D].

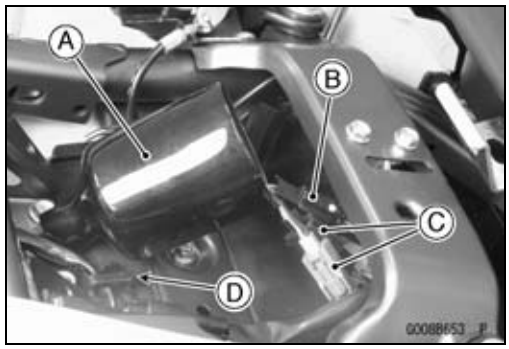

- Remove the dust cover [A] from the leads.
- Remove:
  Bolts [B]
  Screw [C]
- Remove the flap together with the reinforce.

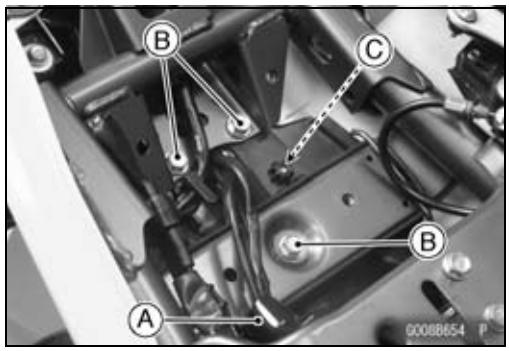

- Remove the following to separate the flap [A] from the reinforce [B].
  Bolts [C] and Collars
  Bolts [D]
  License Plate Bracket [E]

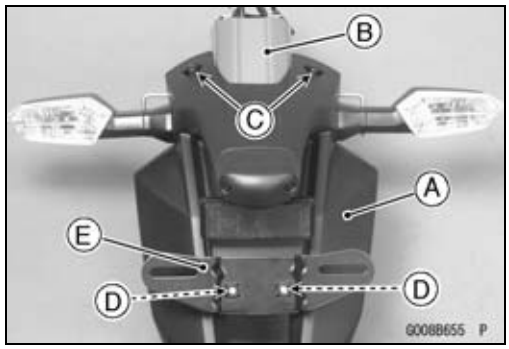

Flap Installation

- Installation is the reverse of removal.

○Run the leads correctly (see Cable, Wire, and Hose Routing section in the Appendix chapter).

Fenders

Rear Fender Removal

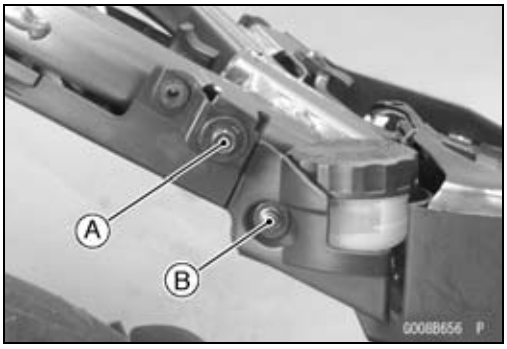

- Remove:
  Flap (with Reinforce installed, see Flap Removal)
  Bolts [A] and Washers (Left and Right)
  Rear Brake Fluid Reservoir Mounting Bolt [B] and Washer

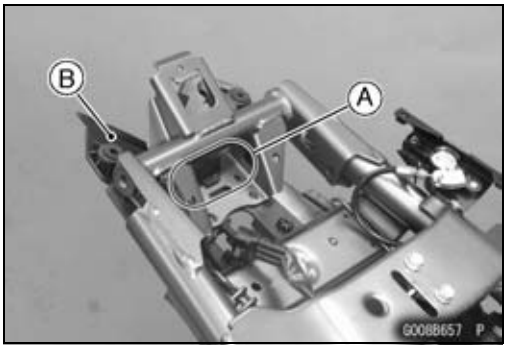

- Clear the hook [A] from the frame to remove the rear fender [B].

Rear Fender Installation

- Installation is the reverse of removal.

○Run the leads correctly (see Cable, Wire, and Hose Routing section in the Appendix chapter).

Frame

Frame Inspection

- Visually inspect the frame for cracks, dents, bending or warp.

★If there is any damage to the frame, replace it.

⚠ WARNING
A repaired frame may fail in use, possibly causing an accident resulting in injury or death. If the frame is bent, dented, cracked, or warped, replace it.

Battery Case

Battery Case Removal

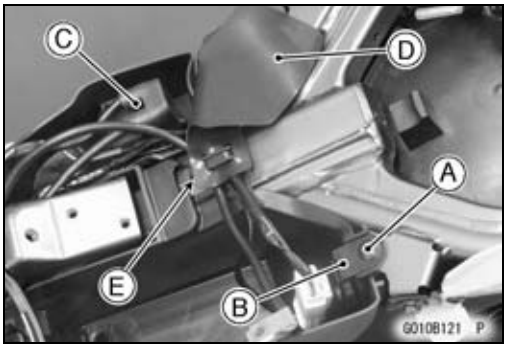

- Remove:
  Battery (see Battery Removal in the Electrical System chapter)
  Fuel Tank (see Fuel Tank Removal in the Fuel System (DFI) chapter)
  Screw [A] and Connector Holder [B] (ABS Equipped Models)
  Starter Relay [C]
  Dust Cover [D]
- Clear the leads from the hook [E].

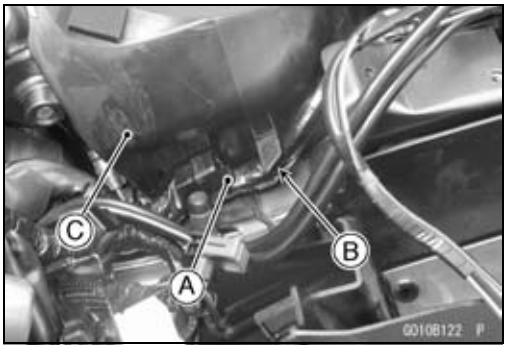

- Clear the main harness [A] from the hook [B] and remove the battery case [C].

Battery Case Installation

- Installation is the reverse of removal.

○Run the leads and harness correctly (see Cable, Wire, and Hose Routing section in the Appendix chapter).

Footpeg Stay

Footpeg Stay Removal

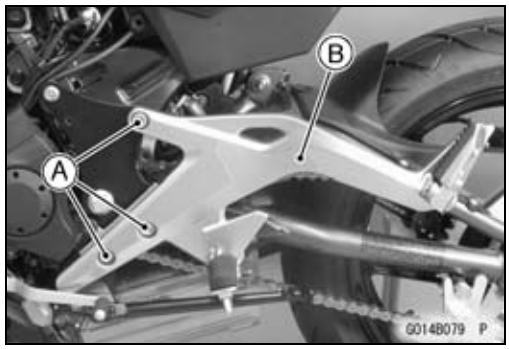

- Remove:
  Frame Cover (see Frame Cover Removal)
  Footpeg Stay Mounting Bolts [A]
  Footpeg Stay [B]
  Rear Master Cylinder (Right Side, see Rear Master Cylinder Removal in the Brakes chapter)
  Brake Pedal (Right Side, see Brake Pedal Removal in the Brakes chapter)
  Rear Brake Light Switch Lead Connector (Right Side)

Footpeg Stay Installation

- Install:
  Rear Master Cylinder (Right Side, see Rear Master Cylinder Installation in the Brakes chapter)
  Brake Pedal (Right Side, see Brake Pedal Installation in the Brakes chapter)
  Rear Brake Light Switch Lead Connector (Right Side)

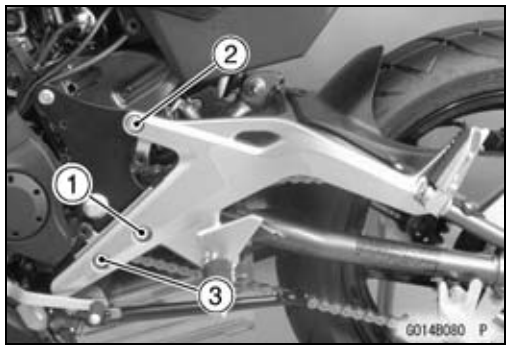

- Install the footpeg stay temporarily.

○Tighten the footpeg stay bolts loosely following the specified tightening sequence [1 ~ 3].

- Tighten the footpeg stay bolts following the specified tightening sequence [1 ~ 3].

Torque - Footpeg Stay Bolts: 25 N·m (2.5 kgf·m, 18 ft·lb)

- Install the frame cover (see Frame Cover Installation).

Windshield

Windshield Removal

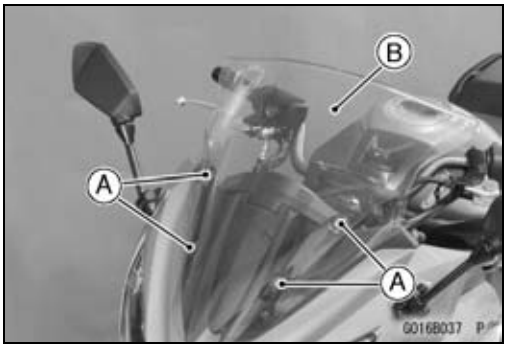

● Remove:
Bolts [A] and Washers
Windshield [B]

Windshield Installation

● Installation is the reverse of removal.
○Tighten:

Torque - Windshield Mounting Bolts: 4.2 N·m (0.43 kgf·m, 37 in·lb)

Sidestand

Sidestand Removal

- Raise the rear wheel off the ground using a stand [A].

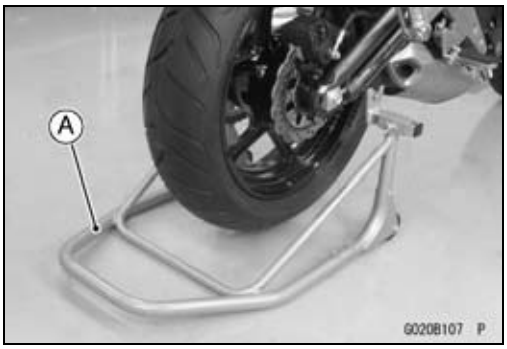

- Remove:
  Sidestand Switch Bolt [A]
  Clamp [B]
  Sidestand Switch [C]

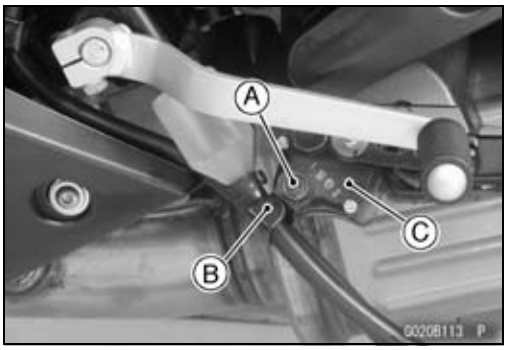

- Remove:
  Spring [A]
  Sidestand Nut [B]
  Sidestand Bolt [C]
  Sidestand [D]

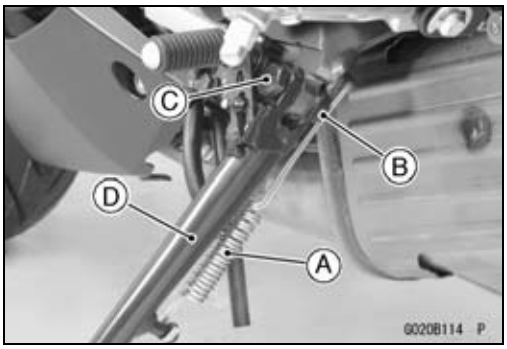

Sidestand Installation

- Apply grease to the sliding area [A] of the sidestand [B].
- Replace the sidestand nut [C] with a new one.
- Tighten the sidestand bolt [D] with the specified torque first, and then tighten the sidestand nut securely.

  Torque - Sidestand Bolt: 44 N·m (4.5 kgf·m, 32 ft·lb)

- Hook the spring [E] as shown in the figure.
- Install the sidestand switch [F] and clamp [G].
- Apply a non-permanent locking agent to the threads of the sidestand switch bolt [H] and tighten it.

  Torque - Sidestand Switch Bolt: 8.8 N·m (0.90 kgf·m, 78 in·lb)

- Run the leads and hose correctly (see Cable, Wire, and Hose Routing section in the Appendix chapter).

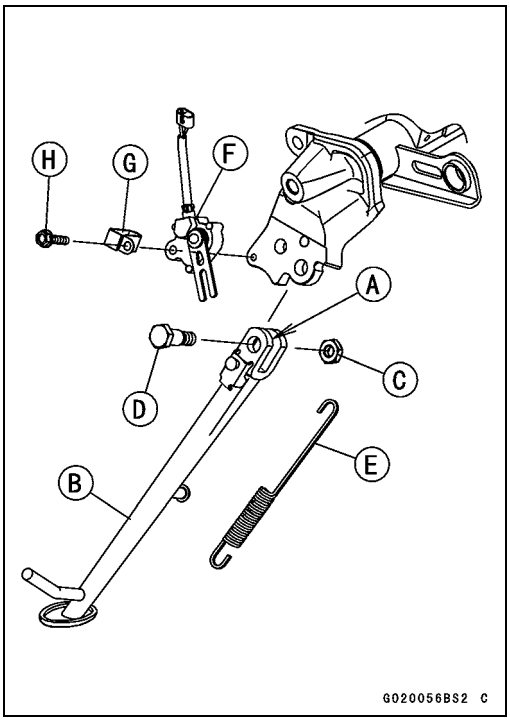

Frame Cover

Frame Cover Removal

- Remove the bolt [A] and collar.
- Pull the frame cover [B] outward to clear the stoppers.

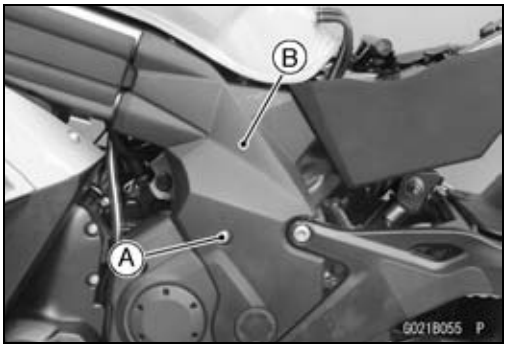

Frame Cover Installation

- Installation is the reverse of removal.

○Fit the rib [A] to the inside of the footpeg stay.
○Insert the projections [B] into the grommets [C].

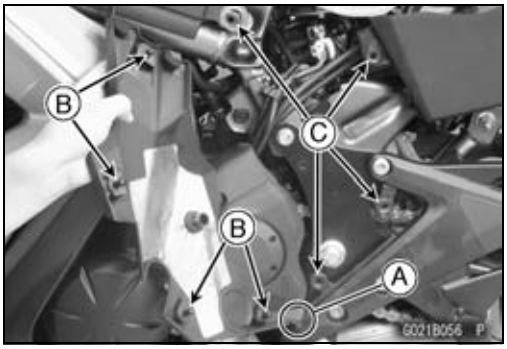

Side Cover Removal

- Remove:
  Frame Cover (see Frame Cover Removal)
  Middle Fairing (see Middle Fairing Removal)
  Bolt [A] and Washer
- Pull the side cover [B] outward to clear the stopper.

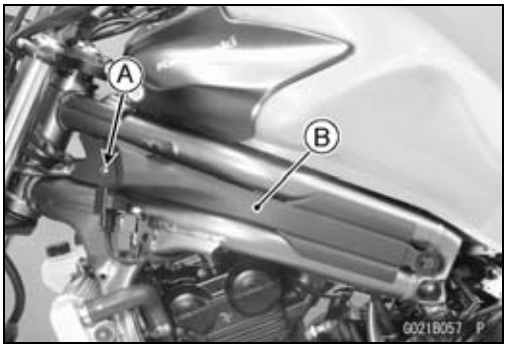

Side Cover Installation

- Installation is the reverse of removal.

○Be sure to install the pads [A] on the left and right side covers.

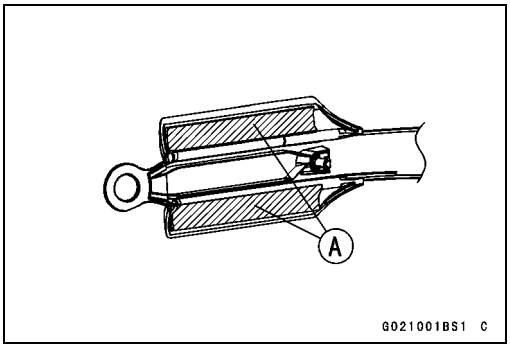

○Install the side cover so that the projection [A] fits into the grommet [B].

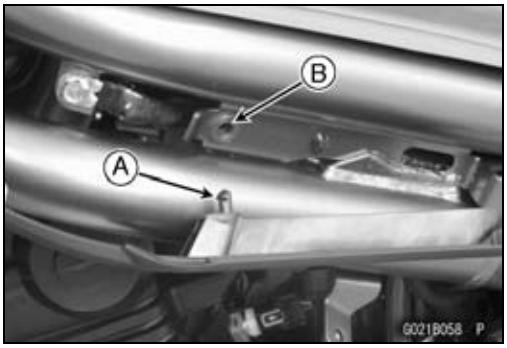

Rear View Mirrors

Rear View Mirror Removal

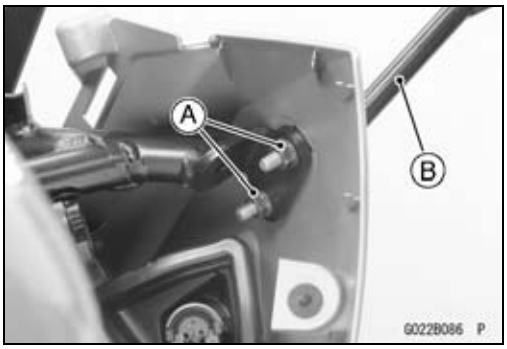

- Remove:
  Upper Inner Fairing (see Upper Inner Fairing Removal)
  Nuts [A]
  Rear View Mirror [B]

Rear View Mirror Installation

- Installation is the reverse of removal.

Electrical System

Table of Contents

Exploded View 16-4
Specifications 16-10
Special Tools and Sealants 16-11
Parts Location 16-13
Wiring Diagram (EX650E Model) 16-16
Wiring Diagram (EX650F Model) 16-18
Precautions 16-20
Electrical Wiring 16-21
- Wiring Inspection 16-21

Battery 16-22
- Battery Removal 16-22
- Battery Installation 16-22
- Battery Activation 16-23
- Precautions 16-26
- Interchange 16-26
- Charging Condition Inspection 16-27
- Refreshing Charge 16-27

Charging System 16-29
- Alternator Cover Removal 16-29
- Alternator Cover Installation 16-29
- Stator Coil Removal 16-30
- Stator Coil Installation 16-30
- Alternator Rotor Removal 16-30
- Alternator Rotor Installation 16-31
- Alternator Inspection 16-32
- Regulator/Rectifier Inspection 16-34
- Charging Voltage Inspection 16-36

Starter Motor Clutch 16-38
- Starter Motor Clutch Removal/Installation 16-38
- Starter Motor Clutch Inspection 16-38
- Starter Motor Clutch Disassembly 16-38
- Starter Motor Clutch Assembly 16-38

Ignition System 16-39
- Crankshaft Sensor Removal 16-39
- Crankshaft Sensor Installation 16-39
- Crankshaft Sensor Inspection 16-40
- Crankshaft Sensor Peak Voltage Inspection 16-40
- Timing Rotor Removal 16-41
- Timing Rotor Installation 16-41
- Stick Coil Removal 16-41
- Stick Coil Installation 16-41
- Stick Coil Inspection 16-42
- Stick Coil Primary Peak Voltage Inspection 16-42
- Spark Plug Removal 16-43
- Spark Plug Installation 16-43
- Spark Plug Condition Inspection 16-43
- Interlock Operation Inspection 16-44
- IC Igniter Inspection 16-44

Electric Starter System 16-47
- Starter Motor Removal 16-47

Starter Motor Installation 16-47
Starter Motor Disassembly 16-48
Starter Motor Assembly 16-48
Brush Inspection 16-50
Commutator Cleaning and Inspection 16-51
Armature Inspection 16-51
Brush Lead Inspection 16-51
Right-hand End Cover Inspection 16-52
Starter Relay Inspection 16-52
Lighting System 16-54
Headlight Beam Horizontal Adjustment 16-54
Headlight Beam Vertical Adjustment 16-54
Headlight Bulb Replacement 16-54
City Light Bulb Replacement 16-55
Headlight Unit Removal/Installation 16-55
Tail/Brake Light (LED) Unit Removal 16-55
Tail/Brake Light (LED) Unit Installation 16-55
License Plate Light Bulb Replacement 16-56
Front Turn Signal Light Bulb Replacement 16-58
Rear Turn Signal Light Bulb Replacement 16-58
Turn Signal Relay Inspection 16-59
Air Switching Valve 16-61
Air Switching Valve Operation Test 16-61
Air Switching Valve Unit Test 16-62
Radiator Fan System 16-64
Fan Motor Inspection 16-64
Meter, Gauge, Indicator Unit 16-65
Meter Unit Removal 16-65
Meter Unit Installation 16-65
Meter, Gauge Disassembly 16-65
Meter Unit Inspection 16-66
Switches and Sensors 16-75
Brake Light Timing Inspection 16-75
Brake Light Timing Adjustment 16-75
Switch Inspection 16-75
Water Temperature Sensor Inspection 16-76
Speed Sensor Removal 16-76
Speed Sensor Installation 16-76
Speed Sensor Inspection 16-77
Fuel Level Sensor Inspection 16-77
Oxygen Sensor Removal (Equipped Models) 16-78
Oxygen Sensor Installation (Equipped Models) 16-78
Oxygen Sensor Inspection (Equipped Models) 16-78
Relay Box 16-79
Relay Box Removal 16-79
Relay Box Installation 16-79
Relay Circuit Inspection 16-79
Diode Circuit Inspection 16-80
Fuse 16-82
30 A Main Fuse Removal 16-82
Fuse Box Fuse Removal 16-82
Fuse Installation 16-82
Fuse Inspection 16-82

This page intentionally left blank.

Exploded View

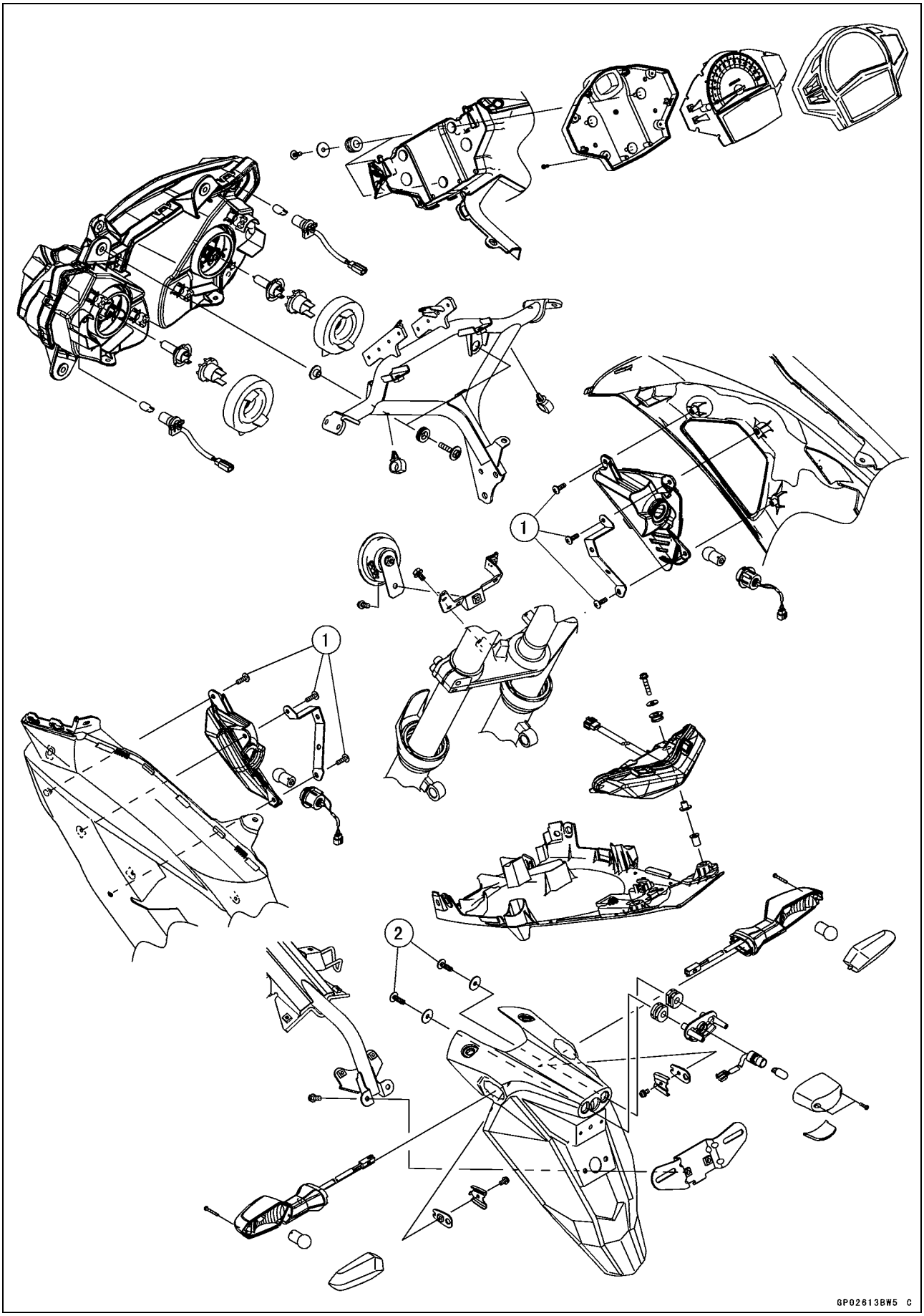

Exploded View

No.	Fastener	Torque			Remarks
		N·m	kgf·m	ft·lb	
1	Front Turn Signal Light Mounting Screws	1.2	0.12	11 in·lb	
2	License Plate Light Mounting Screws	1.2	0.12	11 in·lb	

Exploded View

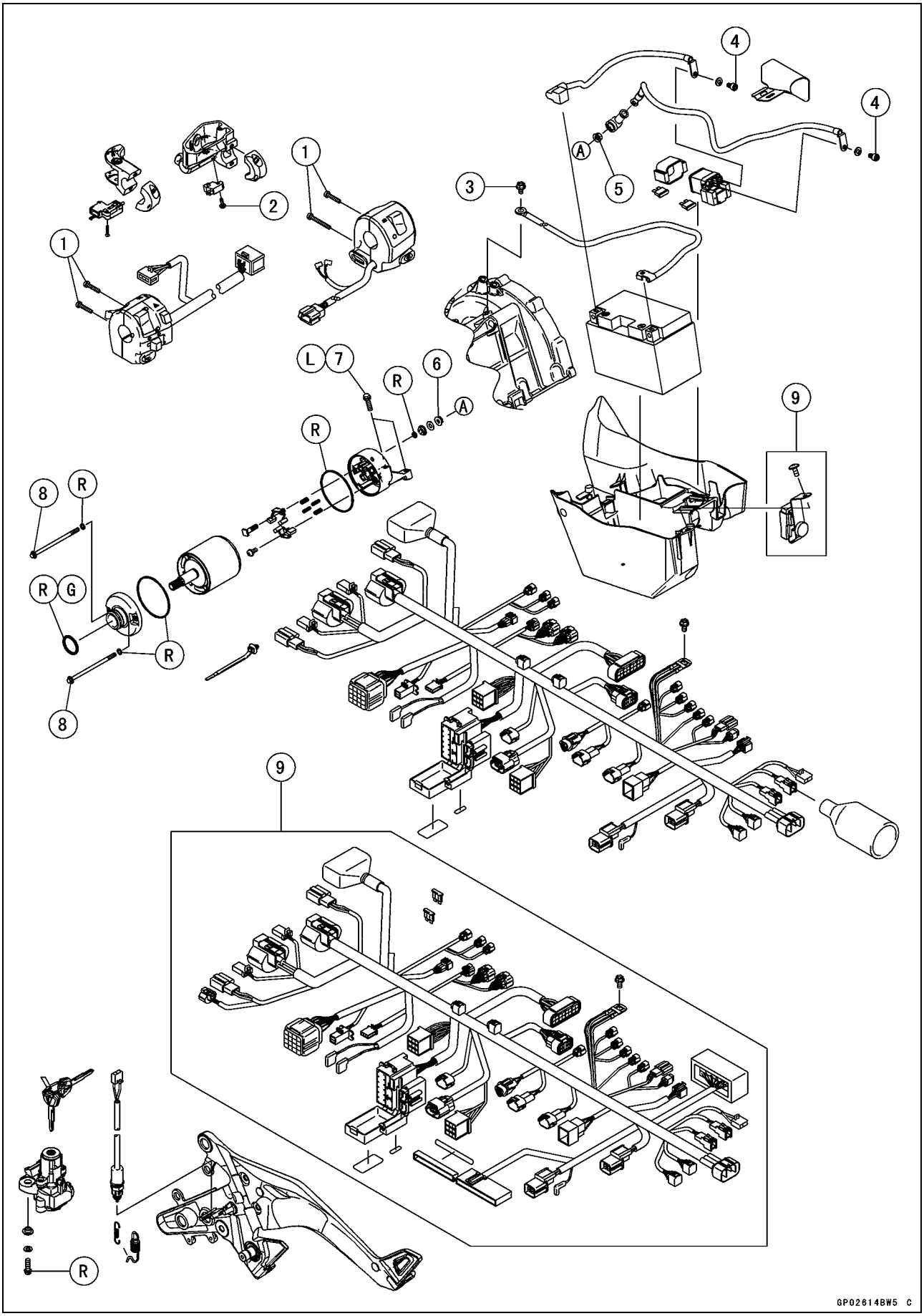

Exploded View

No.	Fastener	Torque			Remarks
		N·m	kgf·m	ft·lb	
1	Switch Housing Screws	3.5	0.36	31 in·lb	
2	Front Brake Light Switch Screw	1.2	0.12	11 in·lb	
3	Engine Ground Lead Terminal Bolt	9.8	1.0	87 in·lb	
4	Starter Relay Terminal Bolts	3.6	0.36	31 in·lb	
5	Starter Motor Cable Terminal Nut	6.0	0.61	53 in·lb	
6	Starter Motor Terminal Locknut	11	1.1	97 in·lb	
7	Starter Motor Mounting Bolts	9.8	1.0	87 in·lb	L
8	Starter Motor Through Bolts	5.0	0.51	44 in·lb	

9. EX650F Model
G: Apply grease.
L: Apply a non-permanent locking agent.
R: Replacement Parts

Exploded View

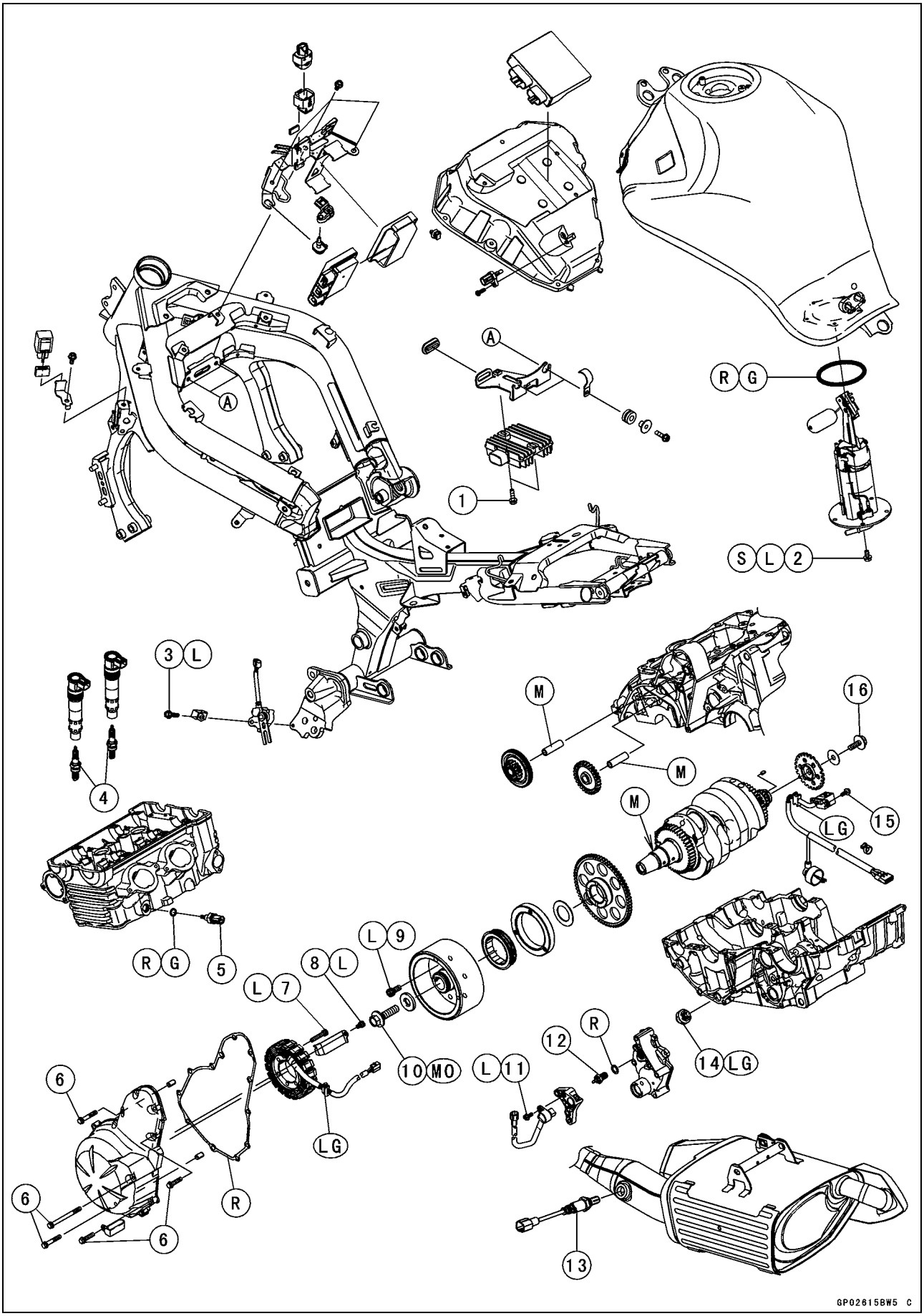

Exploded View

No.	Fastener	Torque			Remarks
		N·m	kgf·m	ft·lb	
1	Regulator/Rectifier Bolts	9.8	1.0	87 in·lb	
2	Fuel Pump Bolts	9.8	1.0	87 in·lb	L, S
3	Sidestand Switch Bolt	8.8	0.90	78 in·lb	L
4	Spark Plugs	15	1.5	11	
5	Water Temperature Sensor	12	1.2	106 in·lb	
6	Alternator Cover Bolts	9.8	1.0	87 in·lb	
7	Stator Coil Bolts	12	1.2	106 in·lb	L
8	Alternator Lead Holding Plate Bolt	9.8	1.0	87 in·lb	L
9	Starter Motor Clutch Bolts	34	3.5	25	L
10	Alternator Rotor Bolt	155	15.8	114	MO
11	Speed Sensor Bolt	7.8	0.80	69 in·lb	L
12	Neutral Switch	15	1.5	11	
13	Oxygen Sensor (Equipped Models)	44	4.5	32	
14	Oil Pressure Switch	15	1.5	11	LG
15	Crankshaft Sensor Bolts	6.0	0.61	53 in·lb	
16	Timing Rotor Bolt	40	4.1	30	

L: Apply a non-permanent locking agent.
LG: Apply liquid gasket.
M: Apply molybdenum disulfide grease.
MO: Apply molybdenum disulfide oil solution.
(Mixture of the engine oil and molybdenum disulfide grease in a weight ratio 10 : 1)
R: Replacement Parts

Specifications

Item	Standard
Battery	
Type	Sealed Battery
Model Name	YT12A-BS
Capacity	12 V 10 Ah
Voltage	12.8 V or more
Charging System	
Type	Three-phase AC
Alternator Output Voltage	42 V or more at 4 000 r/min (rpm)
Stator Coil Resistance	0.18 ~ 0.26 Ω at 20°C (68°F)
Charging Voltage (Regulator/Rectifier Output Voltage)	13.9 ~ 14.9 V
Ignition System	
Crankshaft Sensor:	
Resistance	376 ~ 564 Ω
Peak Voltage	2.0 V or more
Stick Coil:	
Primary Winding Resistance	1.1 ~ 1.5 Ω at 20 °C (68 °F)
Secondary Winding Resistance	10.8 ~ 16.2 kΩ at 20 °C (68 °F)
Primary Peak Voltage	117 V or more
Spark Plug:	
Type	NGK CR9EIA-9
Gap	0.8 ~ 0.9 mm (0.03 ~ 0.04 in.)
Electric Starter System	
Starter Motor:	
Brush Length	12 mm (0.47 in.) (Service limit: 6.5 mm, 0.26 in.)
Air Switching Valve	
Resistance	18 ~ 22 Ω at 20°C (68°F)
Switch and Sensor	
Rear Brake Light Switch Timing	ON after about 10 mm (0.39 in.) pedal travel
Fuel Level Sensor Resistance:	9.6 ~ 12.4 Ω at Full Position 222 ~ 228 Ω at Empty Position
Engine Oil Pressure Switch Connections	When engine is stopped: ON When engine is running: OFF
Water Temperature Sensor Resistance	in the text

Special Tools and Sealants

Hand Tester:
57001-1394

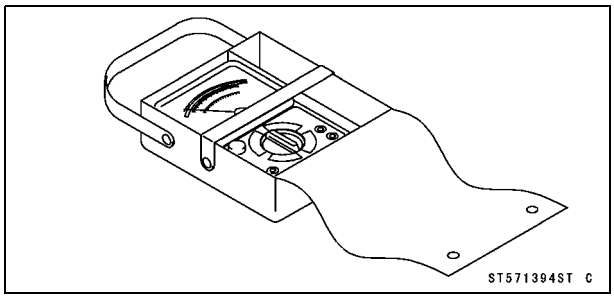

Flywheel Puller Assembly, M38 × 1.5/M35 × 1.5:
57001-1405

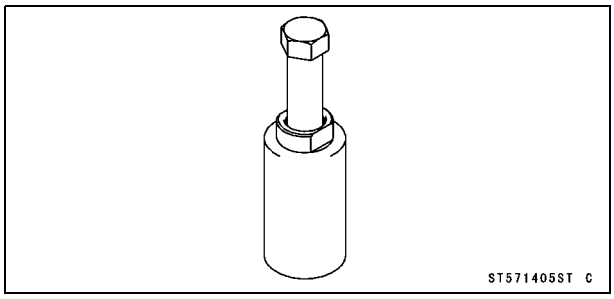

Peak Voltage Adapter:
57001-1415

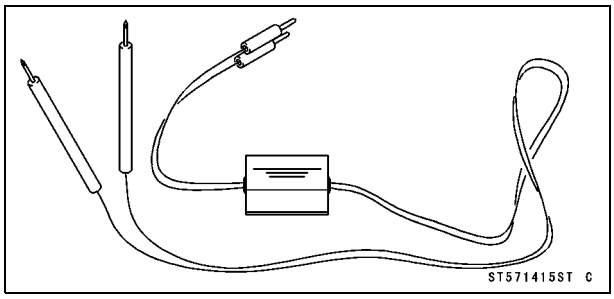

Lead Wire - Peak Voltage Adapter:
57001-1449

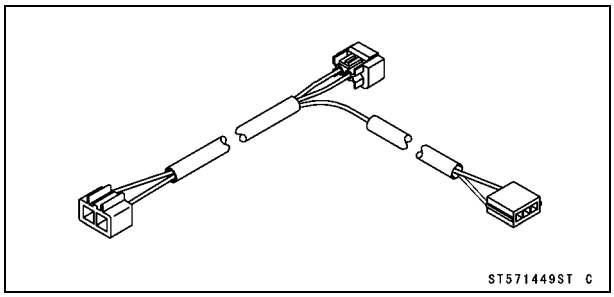

Needle Adapter Set:
57001-1457

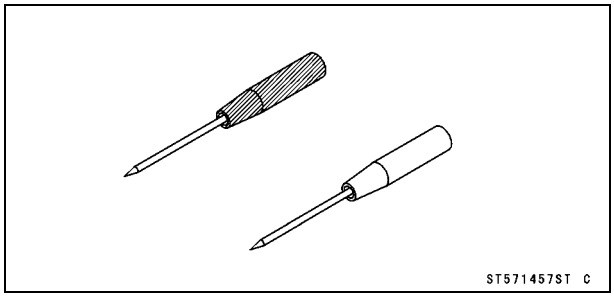

Grip:
57001-1591

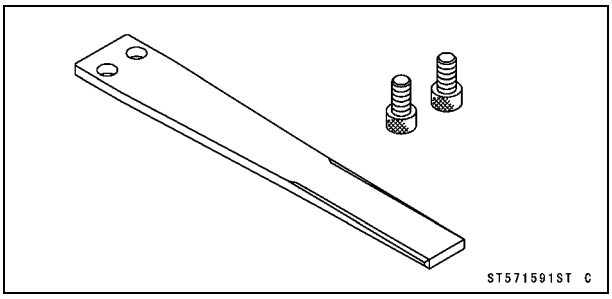

Rotor Holder:
57001-1567

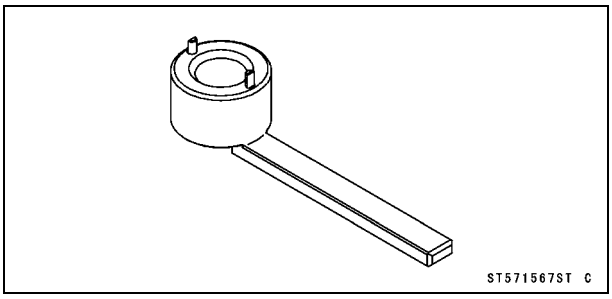

Extension Tube:
57001-1578

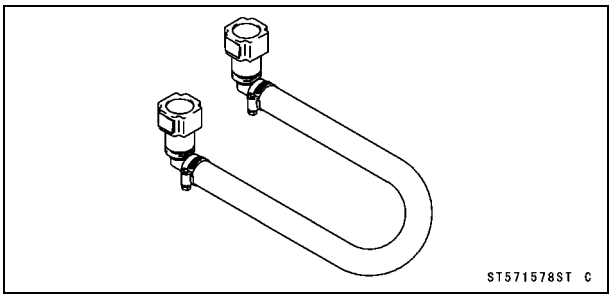

Rotor Holder:
57001-1658

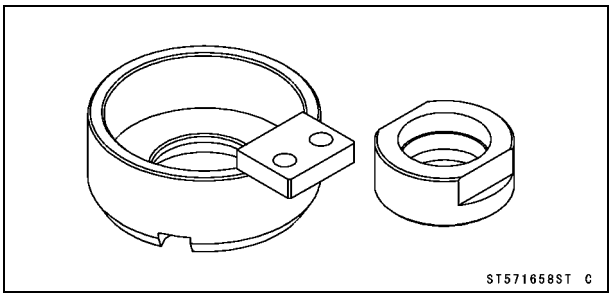

Stopper:
57001-1679

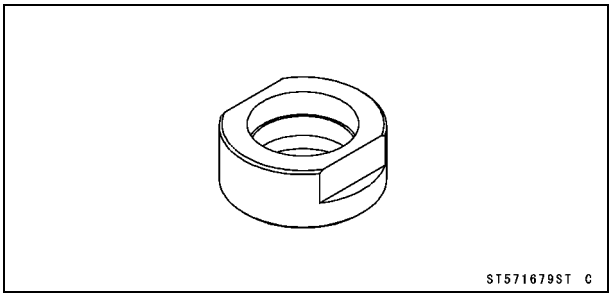

Special Tools and Sealants

Liquid Gasket, TB1211:
56019-120

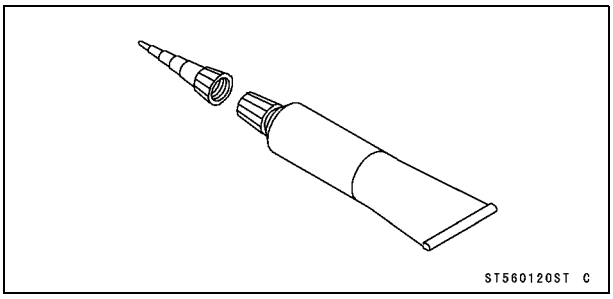

Liquid Gasket, TB1211F:
92104-0004

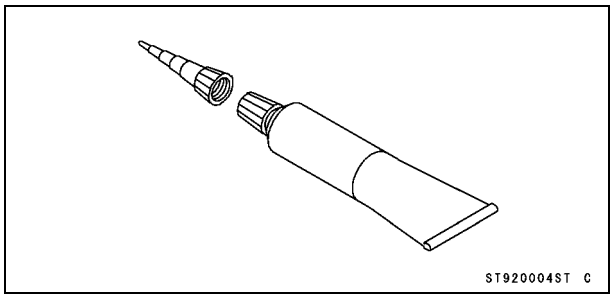

Parts Location

This page intentionally left blank.

Parts Location

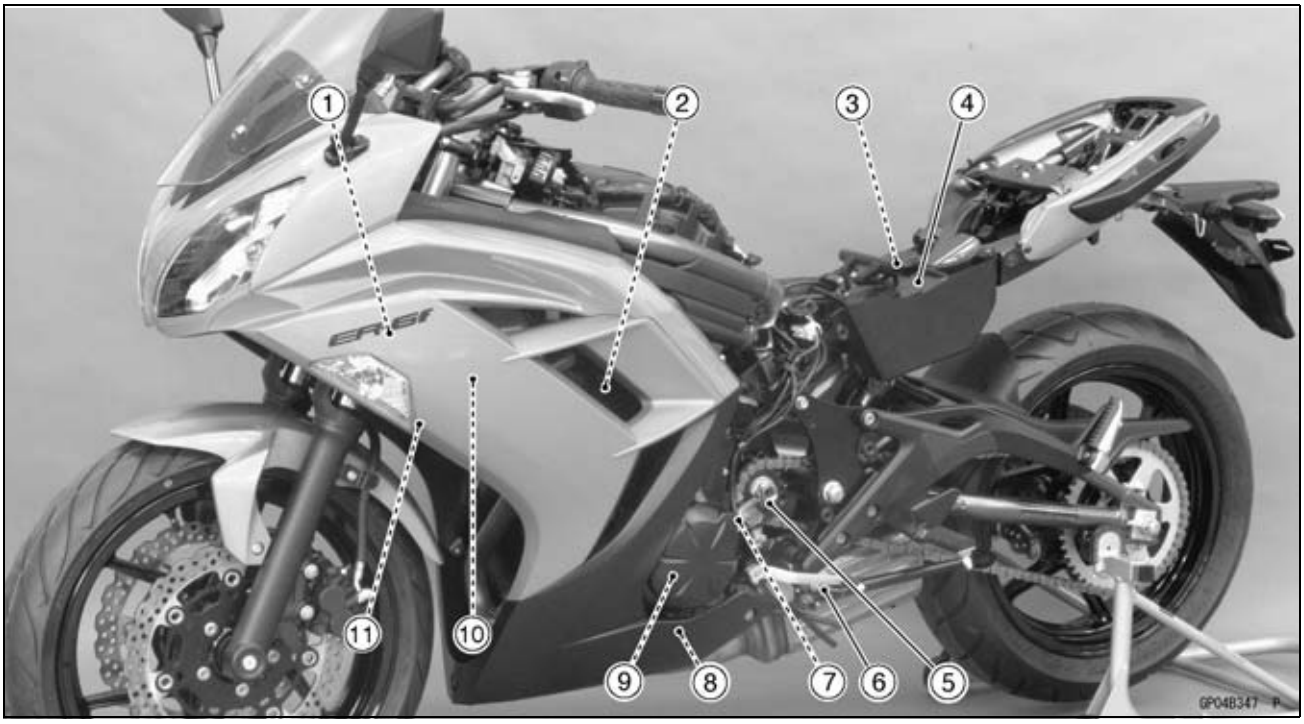

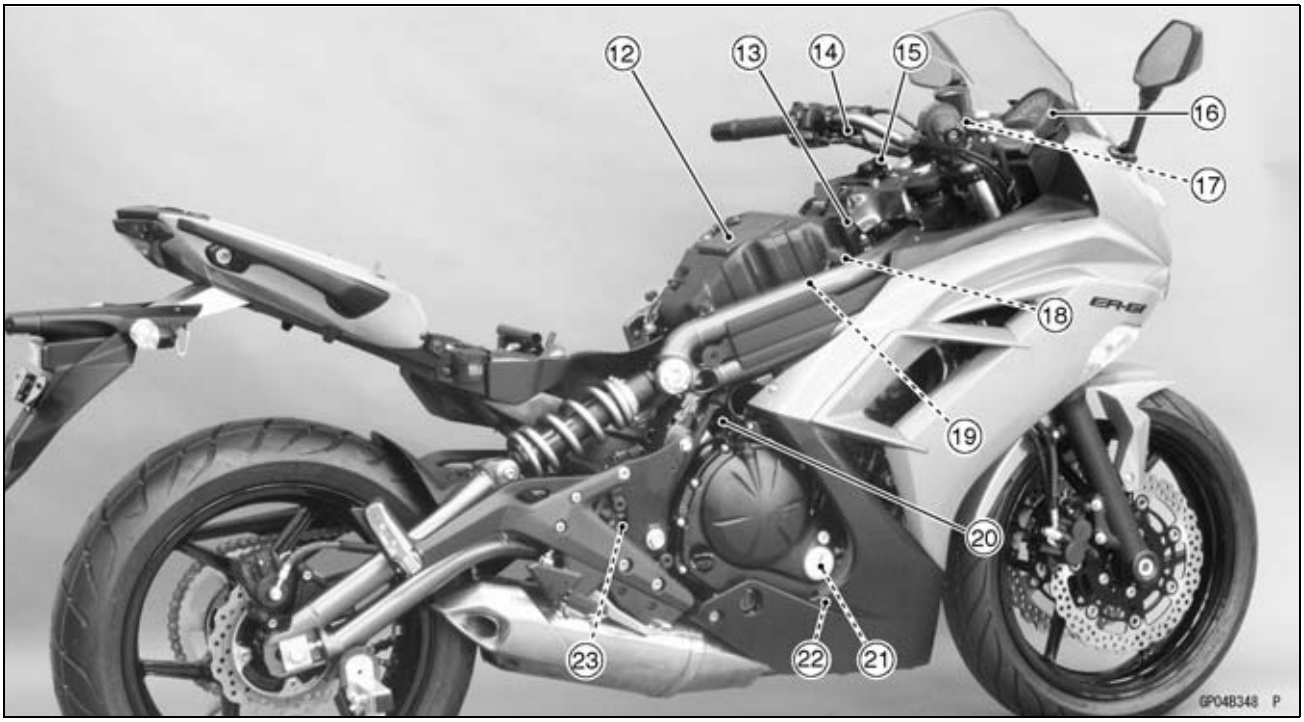

Parts Location

1. Regulator/Rectifier
2. Water Temperature Sensor
3. Starter Relay with Main Fuse
4. Battery 12 V 10 Ah
5. Speed Sensor
6. Sidestand Switch
7. Neutral Switch
8. Oxygen Sensor (Equipped Models)
9. Alternator
10. Turn Signal Relay
11. Radiator Fan Motor
12. ECU
13. Relay Box
14. Starter Lockout Switch
15. Ignition Switch
16. Meter Unit
17. Front Brake Light Switch
18. Air Switching Valve
19. Stick Coils
20. Starter Motor
21. Crankshaft Sensor
22. Oil Pressure Switch
23. Rear Brake Light Switch

Wiring Diagram (EX650E Model)

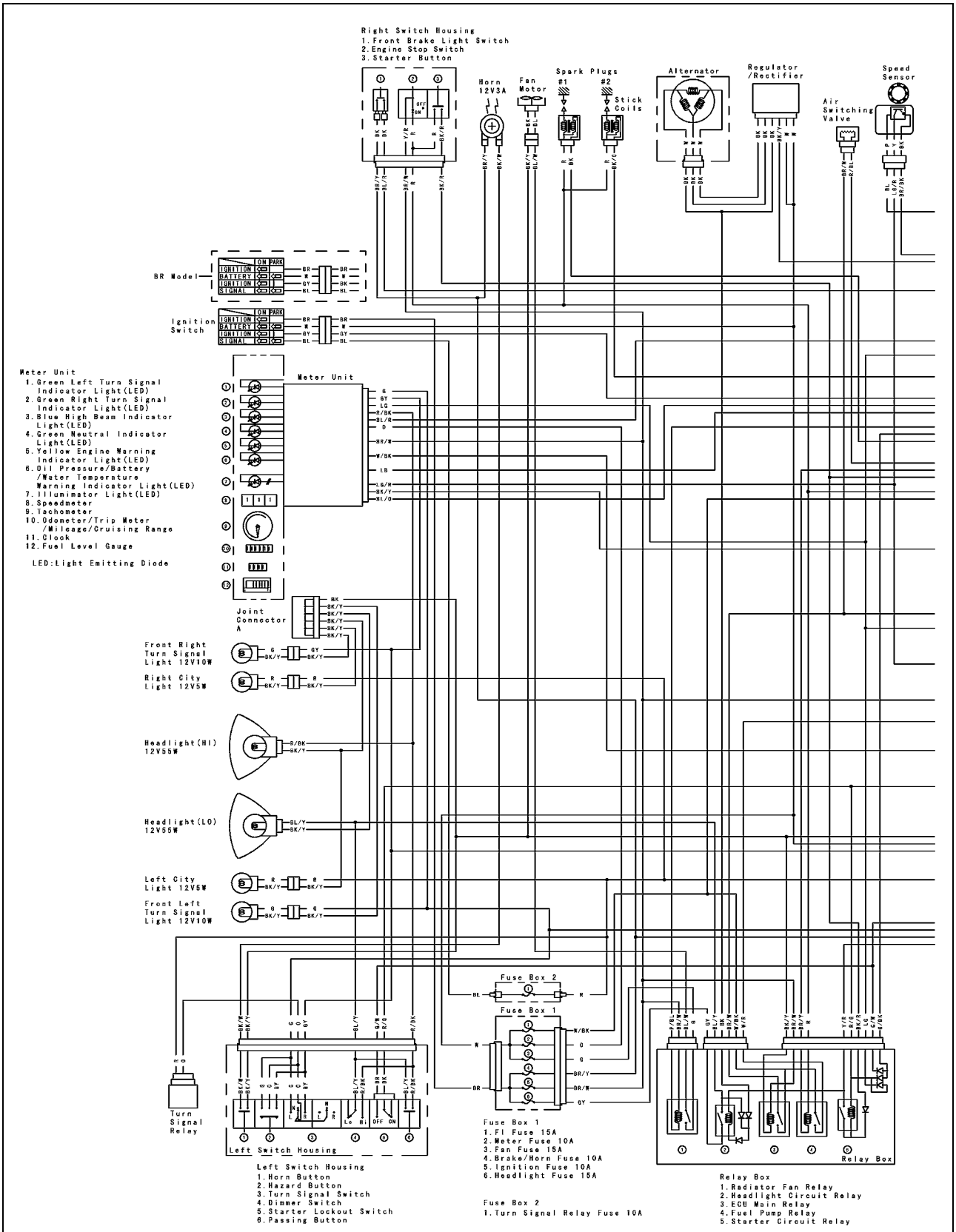

LEFT SWITCH HOUSING CONNECTIONS																		
Horn Button			Hazard Button				Turn Signal Switch				Dimmer Switch			Starter Lockout Switch			Passing Button	
Color	BK/W	BK/Y	Color	G	O	GY	Color	G	O	GY	Color	R/BK	BL/Y	Color	BK	BR	Color	R/BK	BL/Y
							L	○	●		HI	○	●	Clutch Lever					
Push	○	●	Push	○	●	●	OFF(Push)							Released			Push	○	●
			OFF(Push)				R		●	●				Pulled in	○	●			

Wiring Diagram (EX650E Model)

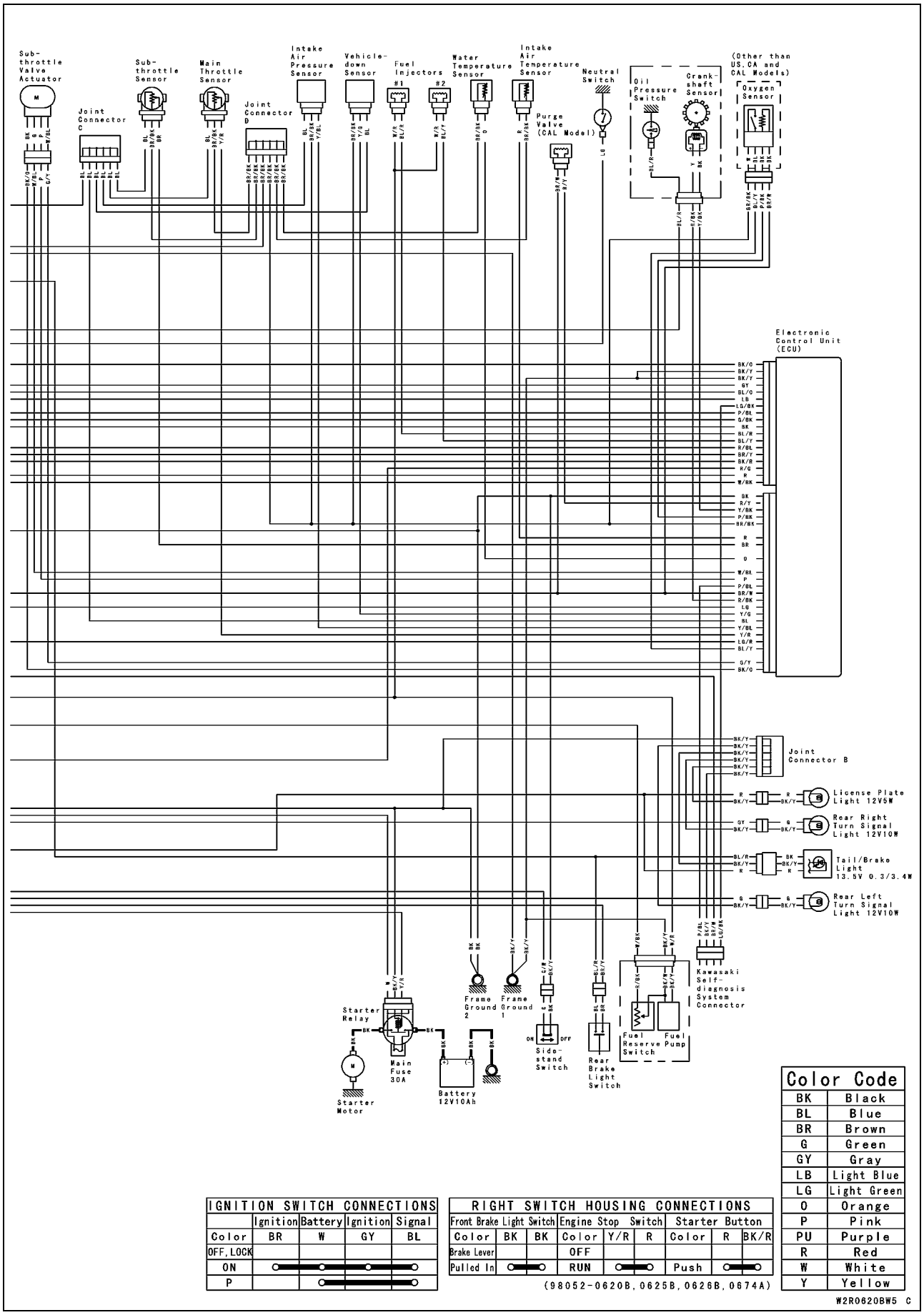

Color Code	
BK	Black
BL	Blue
BR	Brown
G	Green
GY	Gray
LB	Light Blue
LG	Light Green
O	Orange
P	Pink
PU	Purple
R	Red
W	White
Y	Yellow

IGNITION SWITCH CONNECTIONS

	Ignition	Battery	Ignition	Signal
Color	BR	W	GY	BL
OFF, LOCK				
ON	○	○	○	○
P		○	○	○

RIGHT SWITCH HOUSING CONNECTIONS

Front Brake Light Switch			Engine Stop Switch			Starter Button		
Color	BK	BK	Color	Y/R	R	Color	R	BK/R
Brake Lever			OFF					
Pulled In	○	○	RUN	○	○	Push	○	○

(98052-0620B, 0625B, 0626B, 0674A)

W2R0620BW5 C

Wiring Diagram (EX650F Model)

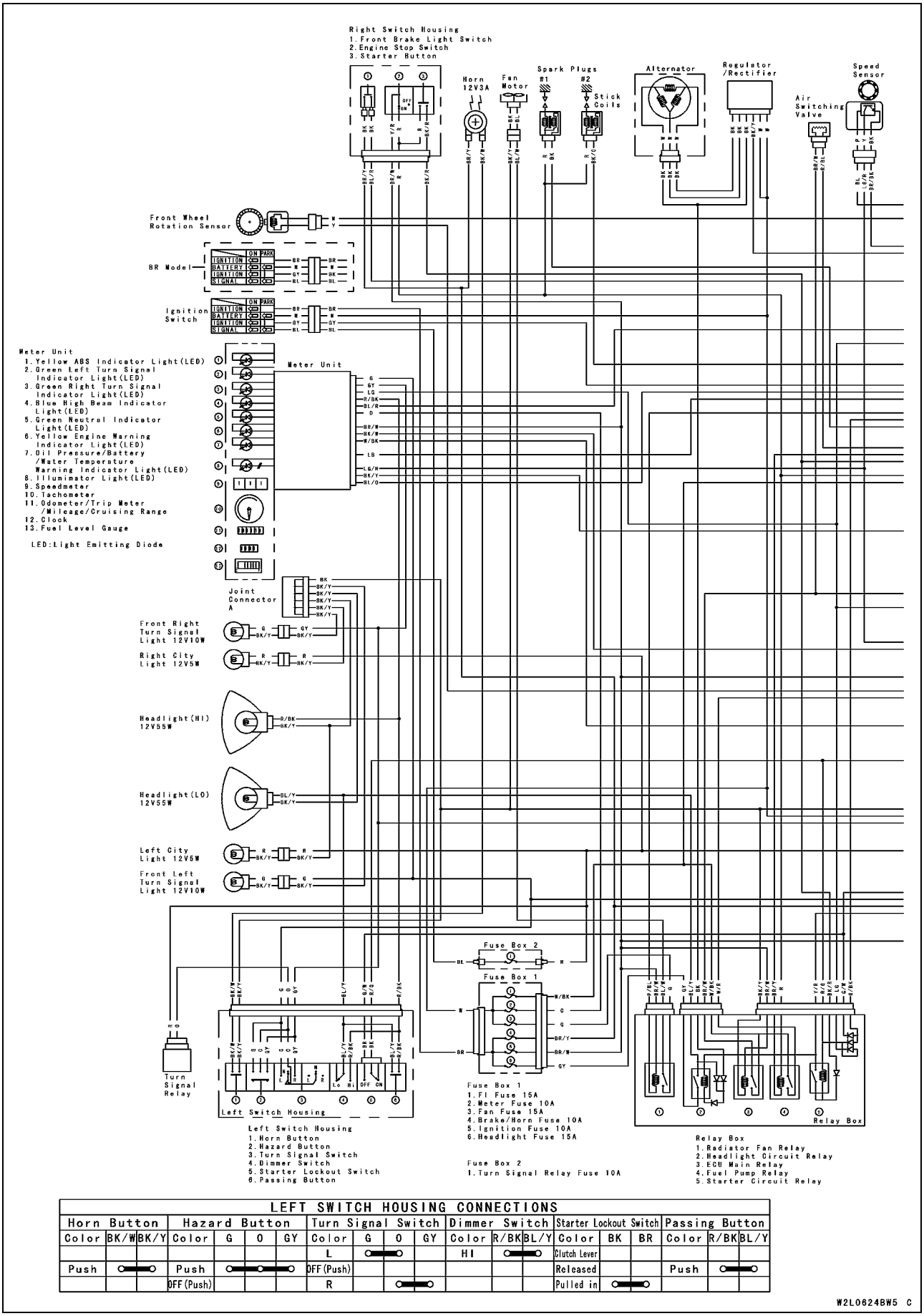

LEFT SWITCH HOUSING CONNECTIONS																		
Horn Button			Hazard Button				Turn Signal Switch				Dimmer Switch			Starter Lockout Switch			Passing Button	
Color	BK/W	BK/Y	Color	G	O	GY	Color	G	O	GY	Color	R/BK	BL/Y	Color	BK	BR	Color	R/BK	BL/Y
							L	○	●		HI	●	○	Clutch Lever					
Push	○	●	Push	○	●	○	OFF(Push)							Released			Push	○	●
			OFF(Push)				R		●	○				Pulled in	○	●			

Wiring Diagram (EX650F Model)

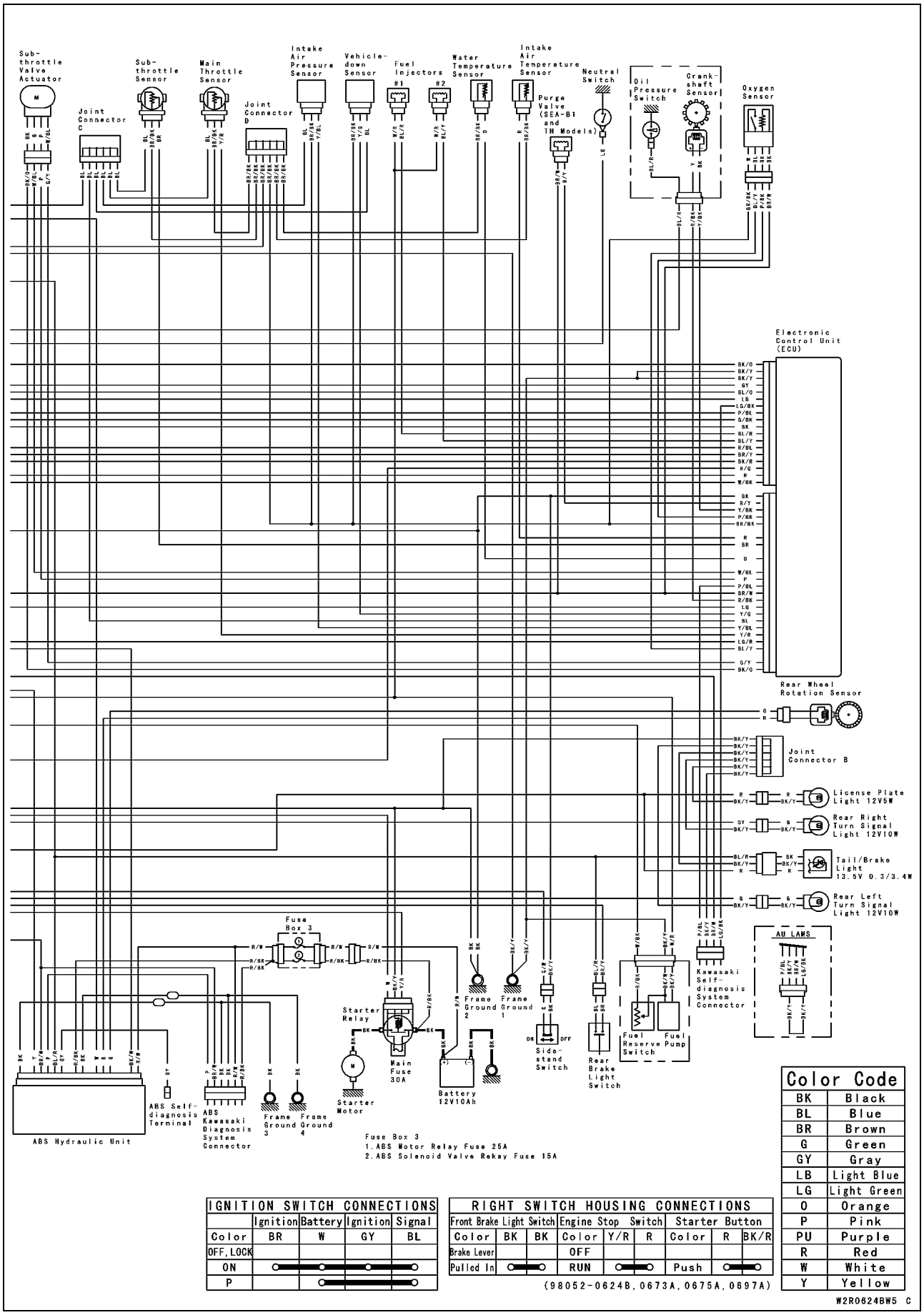

Color Code	
BK	Black
BL	Blue
BR	Brown
G	Green
GY	Gray
LB	Light Blue
LG	Light Green
O	Orange
P	Pink
PU	Purple
R	Red
W	White
Y	Yellow

IGNITION SWITCH CONNECTIONS

	Ignition	Battery	Ignition	Signal
Color	BR	W	GY	BL
OFF, LOCK				
ON	○—●	○—●	○—●	○—●
P		○—●	○—●	○—●

RIGHT SWITCH HOUSING CONNECTIONS

Front Brake Light Switch			Engine Stop Switch			Starter Button		
Color	BK	BK	Color	Y/R	R	Color	R	BK/R
Brake Lever			OFF					
Pulled In	○—●		RUN	○—●		Push	○—●	

(98052-0624B, 0673A, 0675A, 0697A)

W2R0624BW5 C

Precautions

There are a number of important precautions that are musts when servicing electrical systems. Learn and observe all the rules below.

- Do not reverse the battery cable connections. This will burn out the diodes on the electrical parts.
- Always check battery condition before condemning other parts of an electrical system. A fully charged battery is a must for conducting accurate electrical system tests.
- The electrical parts should never be struck sharply, as with a hammer, or allowed to fall on a hard surface. Such a shock to the parts can damage them.
- To prevent damage to electrical parts, do not disconnect the battery cables or any other electrical connections when the ignition switch is on, or while the engine is running.
- Because of the large amount of current, never keep the starter button pushed when the starter motor will not turn over, or the current may burn out the starter motor windings.
- Take care not to short the cables that are directly connected to the battery positive (+) terminal to the chassis ground.
- Troubles may involve one or in some cases all items. Never replace a defective part without determining what CAUSED the failure. If the failure was caused by some other item or items, they must be repaired or replaced, or the new replacement will soon fail again.
- Make sure all connectors in the circuit are clean and tight, and examine wires for signs of burning, fraying, etc. Poor wires and bad connections will affect electrical system operation.
- Measure coil and winding resistance when the part is cold (at room temperature).

Electrical Wiring

Wiring Inspection

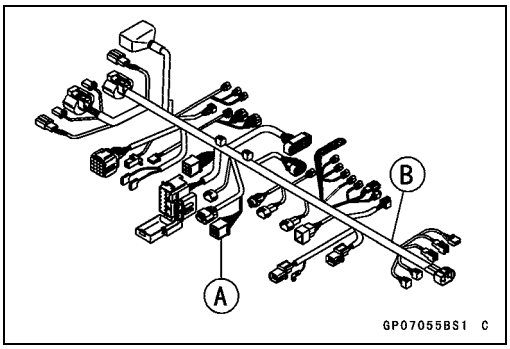

- Visually inspect the wiring for signs of burning, fraying, etc.

★If any wiring is poor, replace the damaged wiring.

- Pull each connector [A] apart and inspect it for corrosion, dirt, and damage.

★If the connector is corroded or dirty, clean it carefully. If it is damaged, replace it.

- Check the wiring for continuity.

○Use the wiring diagram to find the ends of the lead which is suspected of being a problem.

○Connect the hand tester between the ends of the leads.

Special Tool - Hand Tester: 57001-1394

○Set the tester to the × 1 Ω range, and read the tester.

★If the tester does not read 0 Ω, the lead is defective. Replace the lead or the wiring harness [B] if necessary.

Battery

Battery Removal

- Turn the ignition switch to OFF.
- Remove the front seat (see Front Seat Removal in the Frame chapter)
- Remove:
  Front Seat Bracket Bolts [A]
  Front Seat Bracket [B]

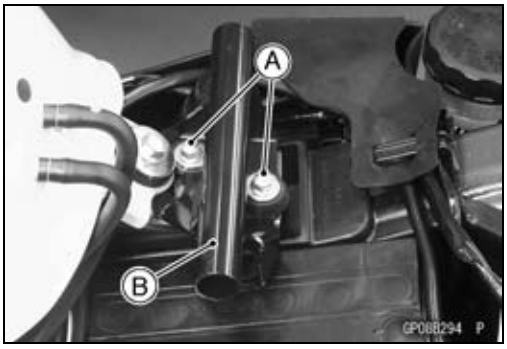

- Disconnect the negative (–) cable [A].

NOTICE
Be sure to disconnect the negative (–) cable first.

- Slide out the positive (+) terminal cap [B] and then disconnect the positive (+) cable [C].
- Remove the battery [D].

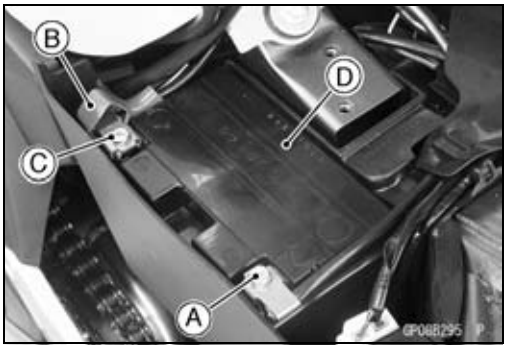

Battery Installation

- Turn the ignition switch to OFF.
- Put the battery into the battery case.
- Apply a little grease on the terminals to prevent corrosion.
- Run the cables correctly (see Cable, Wire, and Hose Routing section in the Appendix chapter).
- Install the positive (+) cable first.
- Cover the positive (+) terminal with the cap.
- Install the negative (–) cable.

- Visually inspect the damper [A] on the seat bracket [B].

★If the damper is damaged or deteriorated, replace it.

○Install the damper so that the thicker side [C] faces downward.

- Install:
  Front Seat Bracket
  Front Seat (see Front Seat Installation in the Frame chapter)

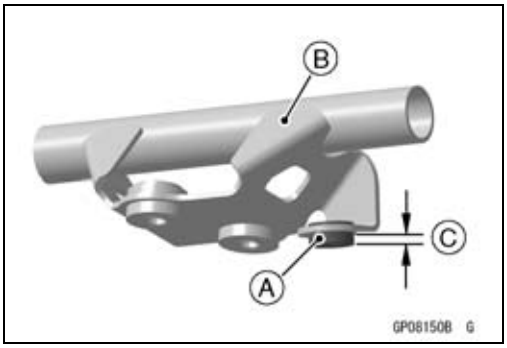

Battery

Battery Activation

Electrolyte Filling

- Make sure that the model name [A] of the electrolyte container matches the model name [B] of the battery. These names must be the same.

Battery Model Name
EX650E/F: YT12A-BS

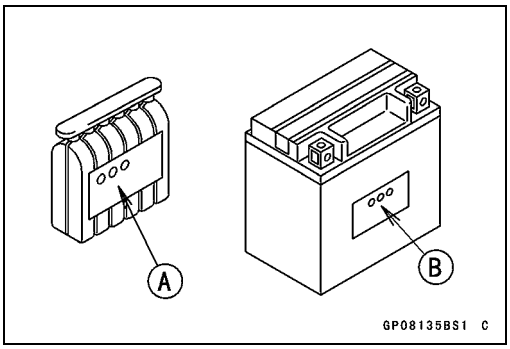

NOTICE

Each battery comes with its own specific electrolyte container; using the wrong container may overfill the battery with incorrect electrolyte, which can shorten battery life and deteriorate battery performance. Be sure to use the electrolyte container with the same model name as the battery since the electrolyte volume and specific gravity vary with the battery type.

NOTICE

Do not remove the aluminum sealing sheet [A] from the filler ports [B] until just prior to use. Be sure to use the dedicated electrolyte container for correct electrolyte volume.

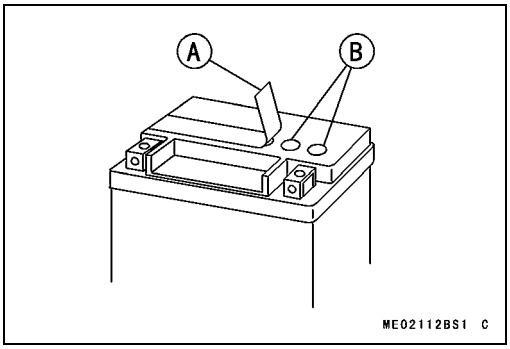

⚠ DANGER

Sulfuric acid in battery electrolyte can cause severe burns. To prevent burns, wear protective clothing and safety glasses when handling electrolyte. If the electrolyte comes in contact with your skin or eyes, wash the area with liberal amounts of water and seek medical attention for more severe burns.

- Place the battery on a level surface.
- Check to see that the sealing sheet has no peeling, tears, or holes in it.
- Remove the sealing sheet.

NOTE

○*The battery is vacuum sealed. If the sealing sheet has leaked air into the battery, it may require a longer initial charge.*

- Remove the electrolyte container from the vinyl bag.
- Detach the strip of caps [A] from the container and set aside, these will be used later to seal the battery.

NOTE

○*Do not pierce or otherwise open the sealed cells [B] of the electrolyte container. Do not attempt to separate individual cells.*

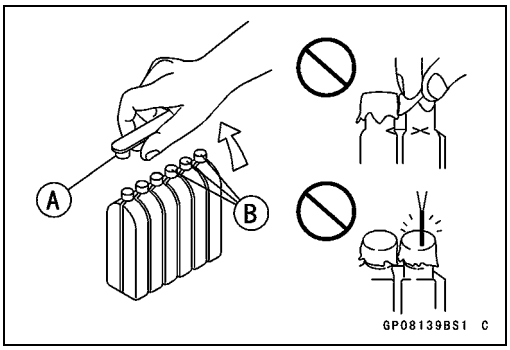

- Place the electrolyte container upside down with the six sealed cells into the filler ports of the battery. Hold the container level, push down to break the seals of all six cells. You will see air bubbles rising into each cell as the ports fill.

NOTE

○*Do not tilt the electrolyte container.*

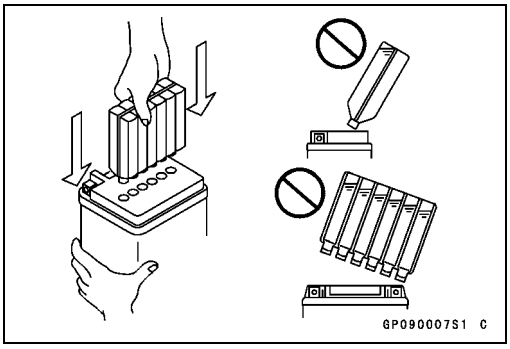

- Check the electrolyte flow.

★If no air bubbles [A] are coming up from the filler ports, or if the container cells have not emptied completely, tap the container [B] a few times.

NOTE

○*Be careful not to have the battery fall down.*

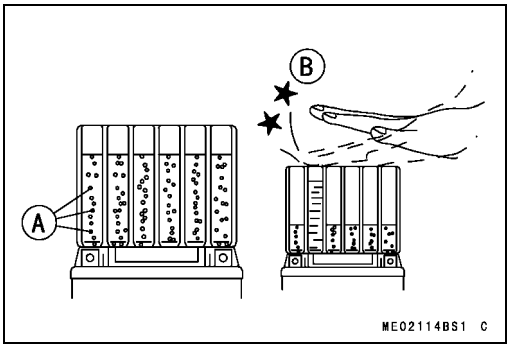

- Keep the container in place. Don't remove the container from the battery, the battery requires all the electrolyte from the container for proper operation.

NOTICE

Removal of the container before it is completely empty can shorten the service life of the battery. Do not remove the container until it is completely empty.

- After filling, let the battery sit for 20 ~ 60 minutes with the electrolyte container kept in place, which is required for the electrolyte to fully permeate into the plates.
- Make sure that the container cells have emptied completely, and remove the container from the battery.

- Place the strip of caps [A] loosely over the filler ports, press down firmly with both hands to seat the strip of caps into the battery (don't pound or hammer). When properly installed, the strip of caps will be level with the top of the battery.

NOTICE

Once the strip of caps is installed onto the battery, never remove the caps, nor add water or electrolyte to the battery.

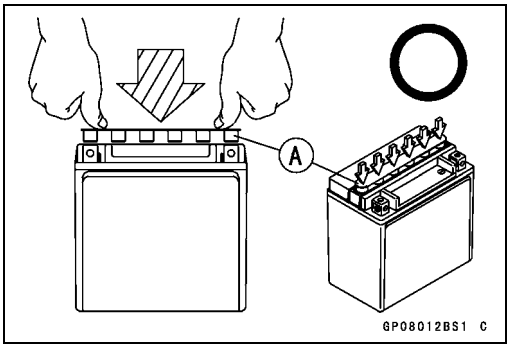

NOTE

○*Charging the battery immediately after filling can shorten service life.*

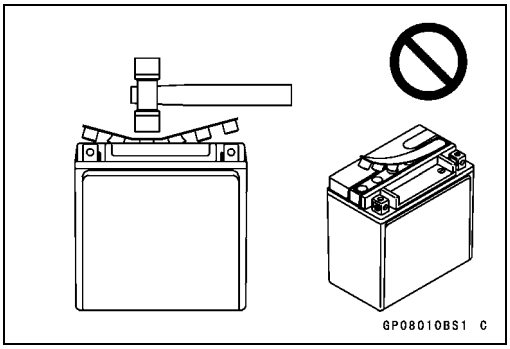

Battery

Initial Charge

● Newly activated sealed batteries require an initial charge.

Standard Charge: 1.2 A × 5 ~ 10 hours

★If using a recommended battery charger, follow the charger's instructions for newly activated sealed battery.

Kawasaki-recommended chargers:

Battery Mate 150-9

OptiMate PRO 4-S/PRO S/PRO2

Yuasa MB-2040/2060

Christie C10122S

★If the above chargers are not available, use equivalent one.

● Let battery sit 30 minutes after initial charge, then check voltage using a voltmeter. (Voltage immediately after charging becomes temporarily high. For accurate measuring, let the battery sit for given time.)

NOTE

○*Charging rates will vary depending on how long the battery has been stored, temperature, and the type of charger used. If voltage is not at least 12.8 V, repeat charging cycle.*

○*To ensure maximum battery life and customer satisfaction, it is recommended the battery be load tested at three times its amp-hour rating for 15 seconds.*
Re-check voltage and if less than 12.8 V repeat the charging cycle and load test. If still below 12.8 V the battery is defective.

Battery

Precautions

1) No need of topping-up
   No topping-up is necessary in this battery until it ends its life under normal use. Forcibly prying off the seal cap to add water is very dangerous. Never do that.
2) Refreshing charge
   If an engine will not start, a horn sounds weak, or lamps are dim, it indicates the battery has been discharged. Give refresh charge for 5 to 10 hours with charge current shown in the specification (see Refreshing Charge).
   When a fast charge is inevitably required, do it following precisely the maximum charge current and time conditions indicated on the battery.

NOTICE

This battery is designed to sustain no unusual deterioration if refresh-charged according to the method specified above. However, the battery's performance may be reduced noticeably if charged under conditions other than given above. Never remove the seal cap during refresh charge.
If by chance an excessive amount of gas is generated due to overcharging, the relief valve releases the gas to keep the battery normal.

3) When you do not use the motorcycle for months.
   Give a refresh charge before you store the motorcycle and store it with the negative cable removed. Give a refresh charge **once a month** during storage.
4) Battery life
   If the battery will not start the engine even after several refresh charges, the battery has exceeded its useful life. Replace it (Provided, however, the vehicle's starting system has no problem).

⚠ DANGER

Batteries produce an explosive gas mixture of hydrogen and oxygen that can cause serious injury and burns if ignited. Keep the battery away from sparks and open flames during charging. When using a battery charger, connect the battery to the charger before turning on the charger. This procedure prevents sparks at the battery terminals which could ignite any battery gases. The electrolyte contains sulfuric acid. Be careful not to have it touch your skin or eyes. If touched, wash it off with liberal amount of water and seek medial attention for more severe burns.

Interchange

A sealed battery can fully display its performance only when combined with a proper vehicle electric system. Therefore, replace a sealed battery only on a motorcycle which was originally equipped with a sealed battery.

Be careful, if a sealed battery is installed on a motorcycle which had an ordinary battery as original equipment, the sealed battery's life will be shortened.

Battery

Charging Condition Inspection

Battery charging condition can be checked by measuring battery terminal voltage with a digital voltmeter [A].

● Remove the battery (see Battery Removal).

NOTICE

Be sure to disconnect the negative (−) lead first.

● Measure the battery terminal voltage.

NOTE

○*Measure with a digital voltmeter which can be read to one decimal place voltage.*

★If the reading is 12.8 V or more, no refresh charge is required, however, if the reading is below the specified, refresh charge is required.

Battery Terminal Voltage
Standard: 12.8 V or more

Terminal Voltage (V) [A]
Battery Charge Rate (%) [B]
Refresh charge is required [C]
Good [D]

● Install the battery (see Battery Installation).

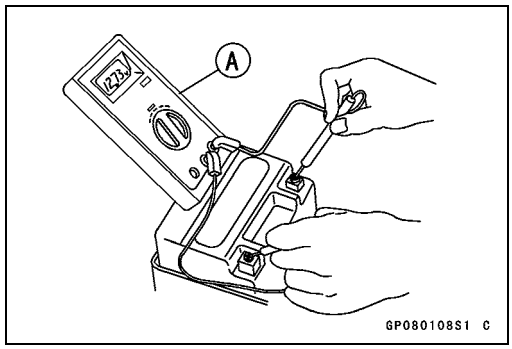

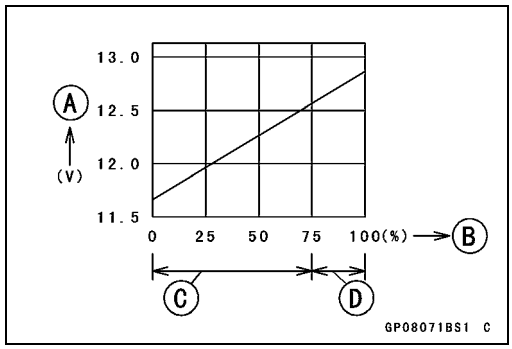

Refreshing Charge

● Remove the battery [A] (see Battery Removal).

NOTICE

Be sure to disconnect the negative (−) lead first.

● Refresh-charge by following method according to the battery terminal voltage.

⚠ WARNING

This battery is sealed type. Never remove seal sheet [B] even at charging. Never add water. Charge with current and time as stated below.

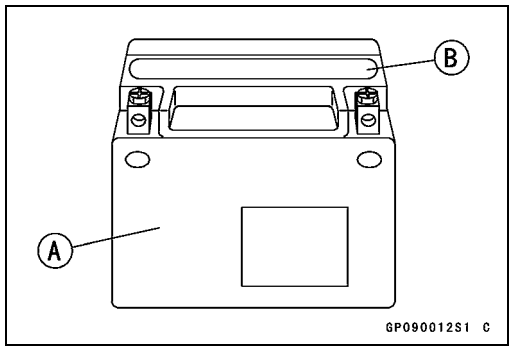

Terminal Voltage: 11.5 ~ less than 12.8 V
Standard Charge
1.2 A × 5 ~ 10 h (see following chart)
Quick Charge
5.0 A × 1 h

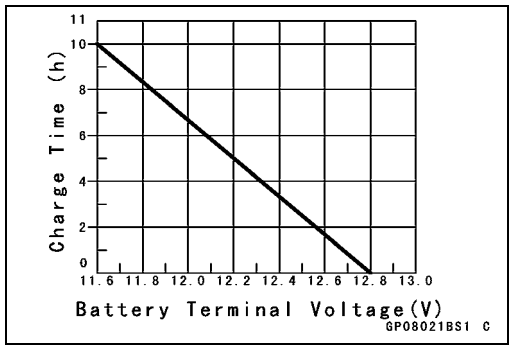

NOTICE

If possible, do not quick charge. If the quick charge is done unavoidably, do the standard charge later on.

Terminal Voltage: less than 11.5 V
Charging Method: 1.2 A × 20 h

Battery

NOTE

○*Increase the charging voltage to a maximum voltage of 25 V if the battery will not accept current initially. Charge for no more than 5 minutes at the increased voltage then check if the battery is drawing current. If the battery will accept current decrease the voltage and charge by the standard charging method described on the battery case. If the battery will not accept current after 5 minutes, replace the battery.*

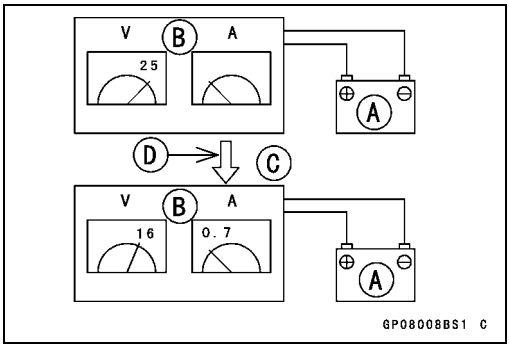

Battery [A]
Battery Charger [B]
Standard Value [C]
Current starts to flow [D]

● Determine battery condition after refreshing charge.

○Determine the condition of the battery 30 minutes after completion of the charge by measuring the terminal voltage according to the table below.

Criteria	Judgement
12.8 V or higher	Good
12.0 ~ lower than 12.8 V	Charge insufficient → Recharge
lower than 12.0 V	Unserviceable → Replace

● Install the battery (see Battery Installation).

Charging System

Alternator Cover Removal

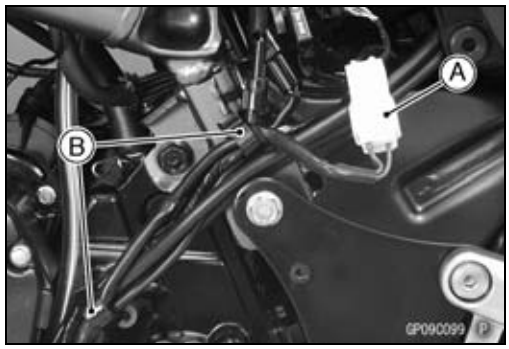

- Remove:
  Left Middle Fairing (see Middle Fairing Removal in the Frame chapter)
  Left Frame Cover (see Frame Cover Removal in the Frame chapter)
  Engine Oil (Drain, see Engine Oil Change in the Periodic Maintenance chapter)
  Engine Sprocket Cover (see Engine Sprocket Removal in the Final Drive chapter)
- Pull out the alternator lead connector [A] from the bracket and disconnect it.
- Open the clamps [B].

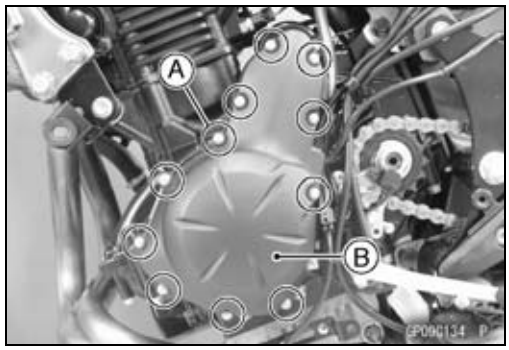

- Remove the alternator cover bolts [A], and take off the alternator cover [B].

NOTE

○*Place a suitable container under the alternator cover.*

Alternator Cover Installation

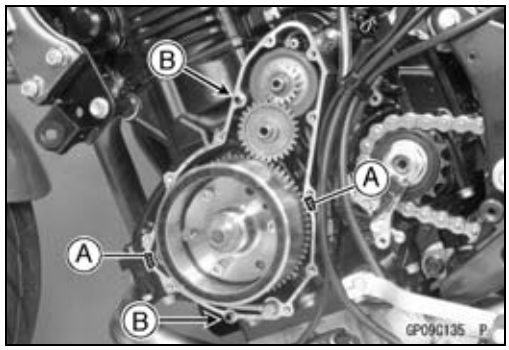

- Clean off any oil or dirt and apply liquid gasket to the alternator lead grommet and crankcase halves mating surface [A].

  Sealant - Liquid Gasket, TB1211F: 92104-0004
- Be sure that the dowel pins [B] are in position.
- Replace the alternator cover gasket with a new one.
- Install the alternator cover.
- Tighten:

  Torque - Alternator Cover Bolts: 9.8 N·m (1.0 kgf·m, 87 in·lb)

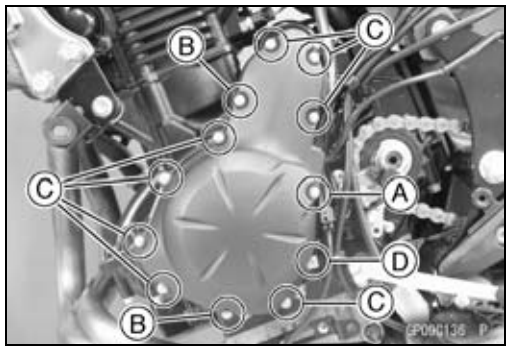

70 mm (2.8 in.) Bolt [A]
35 mm (1.4 in.) Bolts [B]
25 mm (1.0 in.) Bolts [C]
25 mm (1.0 in.) Bolt [D] (Tighten with Clamp)

Stator Coil Removal

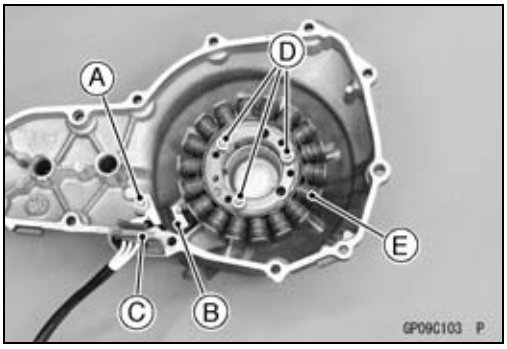

- Remove:
  Alternator Cover (see Alternator Cover Removal)
  Alternator Lead Holding Plate Bolt [A] and Holding Plate [B]
  Alternator Lead Grommet [C]
  Stator Coil Bolts [D]
- Take off the stator coil [E] from the alternator cover.

Stator Coil Installation

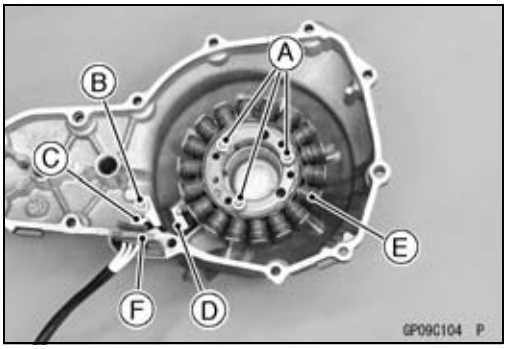

- Apply a non-permanent locking agent to the threads of the stator coil bolts [A] and the alternator lead holding plate bolt [B].
- Clamp the alternator lead [C] with the alternator lead holding plate [D].
- Install the stator coil [E].
- Tighten:

  Torque - Stator Coil Bolts: 12 N·m (1.2 kgf·m, 106 in·lb)
  Alternator Lead Holding Plate Bolt: 9.8 N·m (1.0 kgf·m, 87 in·lb)

- Clean off any oil or dirt and apply liquid gasket to the circumference of the alternator lead grommet [F], and fit the grommet into the notch of the cover.

  Sealant - Liquid Gasket, TB1211F: 92104-0004

Alternator Rotor Removal

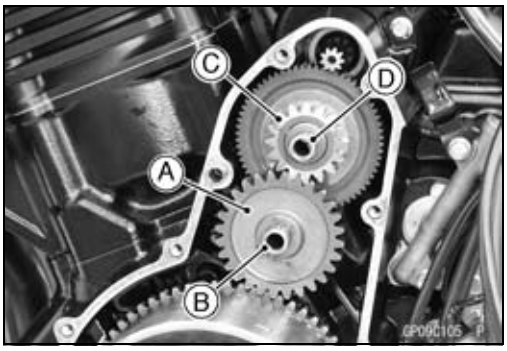

- Remove:
  Alternator Cover (see Alternator Cover Removal)
  Starter Idle Gear [A] and Shaft [B]
  Torque Limiter [C] and Shaft [D]

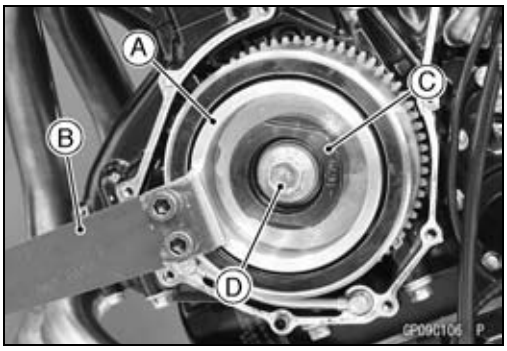

- Wipe oil off the circumference of the rotor.
- Hold the alternator rotor steady with the rotor holder [A].

  Special Tools - Grip [B]: 57001-1591
  Rotor Holder: 57001-1658
  Stopper [C]: 57001-1679

- Remove the rotor bolt [D] and the washer.

Charging System

- Using the flywheel puller assembly [A], remove the alternator rotor from the crankshaft.

  Special Tool - Flywheel Puller Assembly, M38 × 1.5/M35 × 1.5: 57001-1405

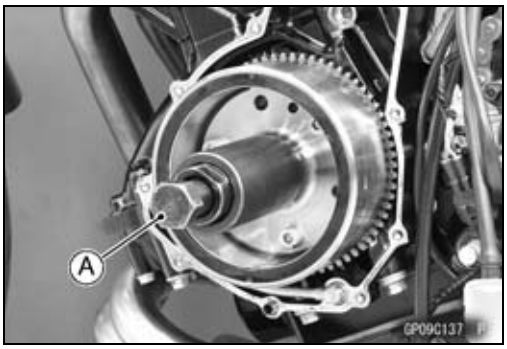

NOTICE
Do not strike the alternator rotor. Striking the rotor can cause the magnets to lose their magnetism.

- Remove the starter clutch gear [A] and washer [B].

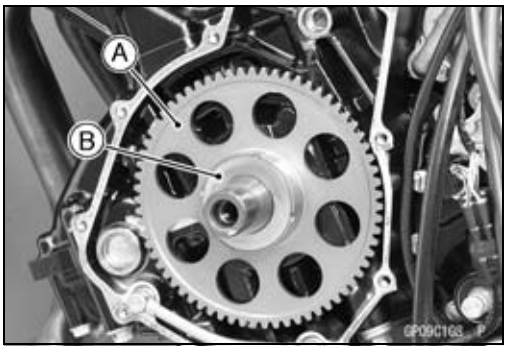

Alternator Rotor Installation

- Using a cleaning fluid, clean off any oil or dirt on the following portions and dry them with a clean cloth.
  Crankshaft Tapered Portion [A]
  Alternator Rotor Tapered Portion [B]
- Apply a thin coat of molybdenum disulfide grease to the crankshaft [C].

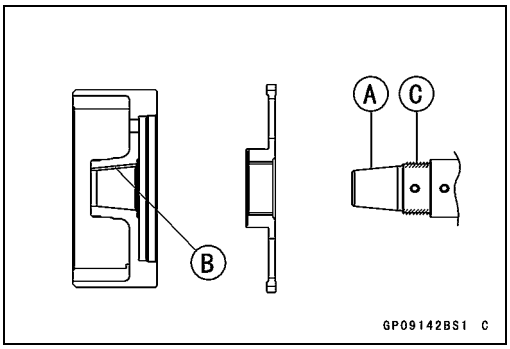

- Install the starter clutch gear [A] and washer [B].
- Again, clean the crankshaft tapered portion [C] and dry there.
- Install the alternator rotor while turning the starter clutch gear clockwise.

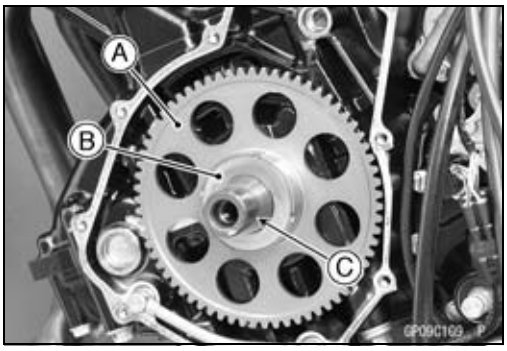

- Install the washer [A].

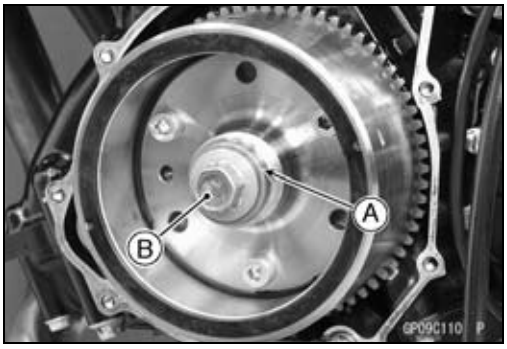

NOTE

○*Confirm that the alternator rotor fits onto the crankshaft before tightening it with specified torque.*

- Apply molybdenum disulfide oil solution to the threads and seating surface of the rotor bolt.
- Install the rotor bolt [B] and tighten it with 68.5 N·m (6.99 kgf·m, 51 ft·lb) of torque.
- Remove the rotor bolt and washer.
- Check the tightening torque with flywheel puller.

★If the rotor is not pulled out with 20 N·m (2.0 kgf·m, 15 ft·lb) of drawing torque, it is installed correctly.

★If the rotor is pulled out with under 20 N·m (2.0 kgf·m, 15 ft·lb) of drawing torque, clean off any oil dirt or flaw of the crankshaft and rotor tapered portion, and dry them with a clean cloth. Then, confirm that it is not pulled out with above torque.

- Reinstall the rotor bolt and washer.
- Tighten the alternator rotor bolt while holding the alternator rotor steady with the rotor holder.

Special Tools - Grip: 57001-1591
Rotor Holder: 57001-1658
Stopper: 57001-1679

Torque - Alternator Rotor Bolt: 155 N·m (15.8 kgf·m, 114 ft·lb)

- Apply a thin coat of molybdenum disulfide grease to the shafts [A], and install them.
- Install the torque limiter [B] and starter idle gear [C].
- Install the alternator cover (see Alternator Cover Installation).

Alternator Inspection

There are three types of alternator failures: short, open (wire burned out), or loss in rotor magnetism. A short or open in one of the coil wires will result in either a low output, or no output at all. A loss in rotor magnetism, which may be caused by dropping or hitting the alternator, by leaving it near an electromagnetic field, or just by aging, will result in low output.

Charging System

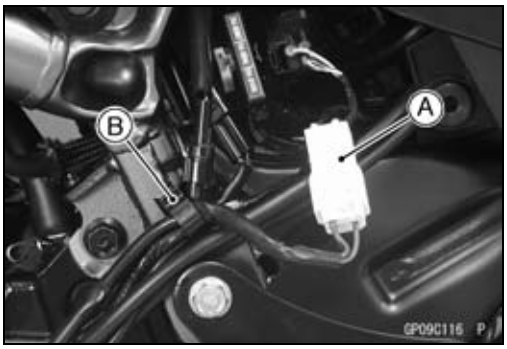

- To check the alternator output voltage, do the following procedures.

○Turn the ignition switch to OFF.
○Remove the left frame cover (see Frame Cover Removal in the Frame chapter).
○Pull out the alternator lead connector [A] from the bracket and disconnect it.
○Open the clamp [B].
○Connect the hand tester as shown in the table 1.

Special Tool - Hand Tester: 57001-1394

○Start the engine.
○Run it at the rpm given in the table 1.
○Note the voltage readings (total 3 measurements).

Table 1: Alternator Output Voltage

Tester Range	Connections		Reading at 4 000 rpm
	Tester (+) to	Tester (–) to	
250 V AC	One White lead	Another White lead	42 V or more

★If the output voltage shows the value in the table, the alternator operates properly.
★If the output voltage shows a much lower than the value in the table, the alternator is defective.

- Check the stator coil resistance as follows.

○Stop the engine.
○Connect the hand tester as shown in the table 2.
○Note the readings (total 3 measurement).

Table 2: Stator Coil Resistance

Tester Range	Connections		Reading
	Tester (+) to	Tester (–) to	
× 1 Ω	One White lead	Another White lead	0.18 ~ 0.26 Ω at 20°C (68°F)

★If there is more resistance than shown in the table, or no hand tester reading (infinity) for any two leads, the stator has an open lead and must be replaced. Much less than this resistance means the stator is shorted, and must be replaced.

- Using the highest resistance range of the hand tester, measure the resistance between each of the white leads and chassis ground.

★Any hand tester reading less than infinity (∞) indicates a short, necessitating stator replacement.
★If the stator coils have normal resistance, but the voltage check showed the alternator to be defective; then the rotor magnets have probably weakened, and the rotor must be replaced.

Regulator/Rectifier Inspection

● Remove:
Radiator (see Radiator and Radiator Fan Removal in the Cooling System chapter)
Baffle Plate Bolts [A]
Baffle Plate [B]

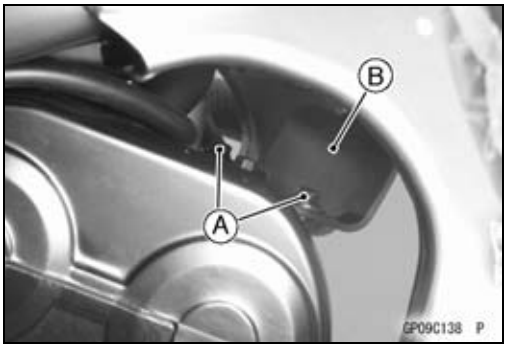

● Remove:
Regulator/Rectifier Bolts [A]
Regulator/Rectifier [B]
Connector [C] (Disconnect)

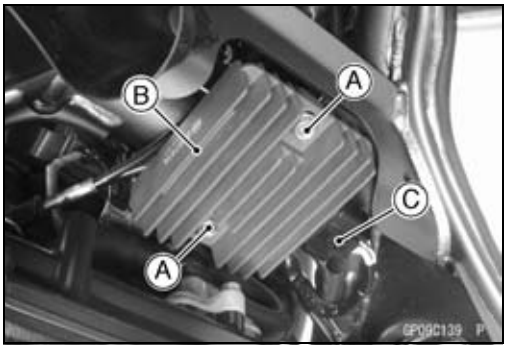

Rectifier Circuit Check

● Check conductivity of the following pair of terminals.

Rectifier Circuit Inspection

Tester connection	W1-BK1,	W1-BK2,	W1-BK3
	BK/Y-BK1,	BK/Y-BK2,	BK/Y-BK3

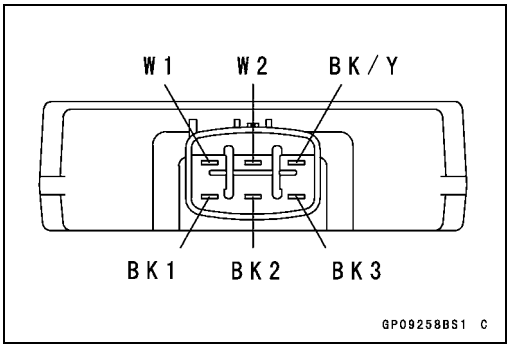

★The resistance should be low in one direction and more than ten times as much in the other direction. If any two leads are low or high in both directions, the rectifier is defective and the regulator/rectifier must be replaced.

NOTE

○*The actual meter reading varies with the meter used and the individual rectifier, but, generally speaking the lower reading should be from zero to one half the scale.*

Regulator Circuit Check

To test the regulator out of circuit, use three 12 V batteries and a test light (12 V 3 ~ 6 W bulb in a socket with leads).

NOTICE

The test light works as an indicator and also a current limiter to protect the regulator/rectifier from excessive current. Do not use an ammeter instead of a test light.

● Check to be sure the rectifier circuit is normal before continuing.

Charging System

● Do the 1st step regulator circuit test.
○Connect the test light and the 12 V battery to the regulator/rectifier as shown.
○Check the BK1, BK2 and BK3 terminal respectively.
★If the test light turns on, the regulator/rectifier is defective. Replace it.
★If the test light does not turn on, continue the test.

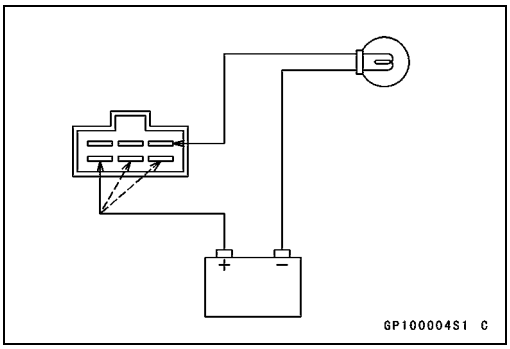

● Do the 2nd step regulator circuit test.
○Connect the test light and the 12 V battery in the same manner as specified in the “Regulator Circuit Test-1st Step”.
○Apply 12 V to the voltage W2 terminal.
○Check the BK1, BK2 and BK3 terminal respectively.
★If the test light turns on, the regulator/rectifier is defective. Replace it.
★If the test light does not turn on, continue the test.

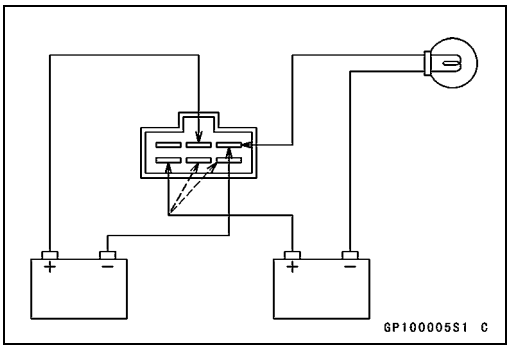

● Do the 3rd step regulator circuit test.
○Connect the test light and the 12 V battery in the same manner as specified in the “Regulator Circuit Test-1st Step”.
○Momentarily apply 24 V to the voltage W2 terminal by adding a 12 V battery.
○Check the BK1, BK2 and BK3 terminals respectively.

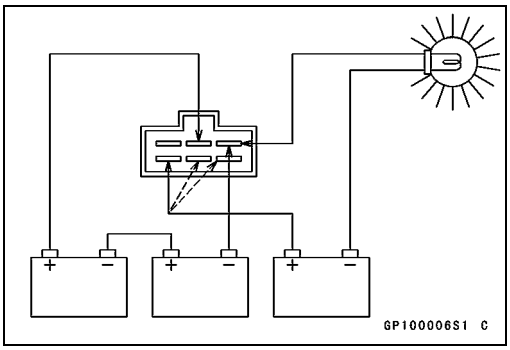

NOTICE

Do not apply more than 24 V. If more than 24 V is applied, the regulator/rectifier may be damaged. Do not apply 24 V more than a few seconds. If 24 V is applied for more than a few seconds, the regulator/rectifier may be damaged.

★If the test light did not light when the 24 V was applied momentarily to the voltage monitoring terminal, the regulator/rectifier is defective. Replace it.
★If the regulator/rectifier passes all of the tests described, it may still be defective. If the charging system still does not work properly after checking all of the components and the battery, test the regulator/rectifier by replacing it with a known good unit.

● Installation is the reverse of removal.
○Tighten:

Torque - Regulator/Rectifier Bolts: 9.8 N·m (1.0 kgf·m, 87 in·lb)
Baffle Plate Bolts: 5.9 N·m (0.60 kgf·m, 52 in·lb)

Charging System

Charging Voltage Inspection

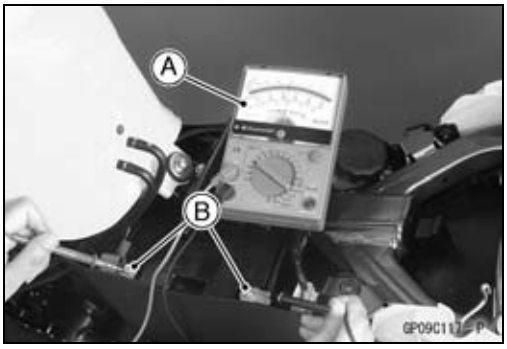

- Check the battery condition (see Charging Condition Inspection).
- Warm up the engine to obtain actual alternator operating conditions.
- Check that the ignition switch is turned to OFF, and connect the hand tester [A] to the battery terminals [B].

Special Tool - Hand Tester: 57001-1394

- Start the engine, and note the voltage readings at various engine speeds with the headlight turned on and then turned off (To turn off the headlight, disconnect the headlight connector on the headlight unit.). The readings should show nearly battery voltage when the engine speed is low, and, as the engine speed rises, the readings should also rise. But they must be kept under the specified voltage.

Charging Voltage

Tester Range	Connections		Reading
	Tester (+) to	Tester (–) to	
25 V DC	Battery (+)	Battery (–)	13.9 ~ 14.9 V

- Turn the ignition switch to OFF to stop the engine, and disconnect the hand tester.

★If the charging voltage is kept between the values given in the table, the charging system is considered to be working normally.

★If the charging voltage is much higher than the values specified in the table, the regulator/rectifier is defective or the regulator/rectifier leads are loose or open.

★If the charging voltage does not rise as the engine speed increases, then the regulator/rectifier is defective or the alternator output is insufficient for the loads. Check the alternator and regulator/rectifier to determine which part is defective.

Charging System

Charging System Circuit

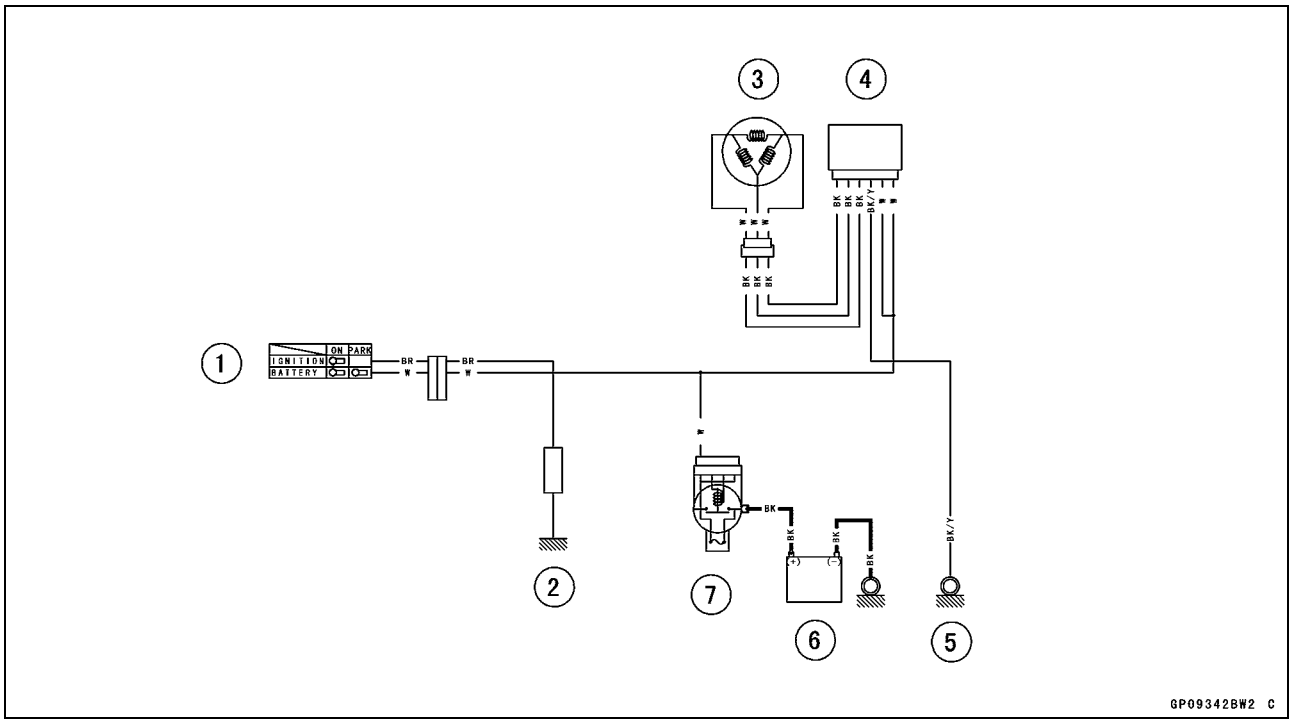

1. Ignition Switch
2. Load
3. Alternator
4. Regulator/Rectifier
5. Frame Ground
6. Battery 12 V 10 Ah
7. Main Fuse 30 A

Starter Motor Clutch

Starter Motor Clutch Removal/Installation

● Refer to the Alternator Rotor Removal/Installation.

Starter Motor Clutch Inspection

● Remove:
  Alternator Cover (see Alternator Cover Removal)
  Starter Idle Gear and Shaft (see Alternator Rotor Removal)
  Torque Limiter and Shaft (see Alternator Rotor Removal)
● Turn the starter motor clutch gear [A] by hand. The starter motor clutch gear should turn clockwise [B] freely, but should not turn counterclockwise [C].
★If the starter motor clutch does not operate as it should or if it makes noise, go to the next step.
● Disassemble the starter motor clutch (see Starter Motor Clutch Disassembly).
● Visually inspect the clutch parts.
★If there is any worn or damaged part, replace it.

NOTE

○*Examine the starter motor clutch gear as well. Replace it if it worn or damaged.*

Starter Motor Clutch Disassembly

● Remove:
  Alternator Rotor (see Alternator Rotor Removal)
  Starter Motor Clutch Bolts [A]

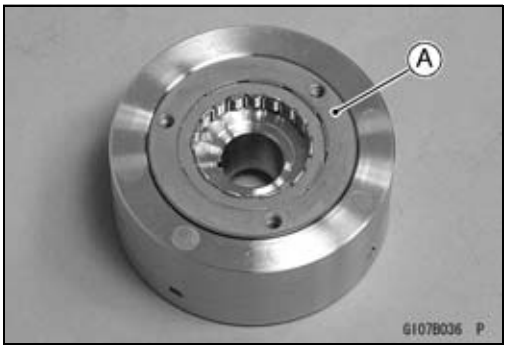

● Remove the starter motor clutch [A].

Starter Motor Clutch Assembly

● Assembly is the reverse of disassembly.
○Apply a non-permanent locking agent to the threads of the starter motor clutch bolts, and tighten them.

Torque - Starter Motor Clutch Bolts: 34 N·m (3.5 kgf·m, 25 ft·lb)

Ignition System

⚠ WARNING

The ignition system produces extremely high voltage. Do not touch the spark plug, ignition coil or ignition coil lead while the engine is running, or you could receive a severe electrical shock.

NOTICE

Do not disconnect the battery cables or any other electrical connections when the ignition switch is on, or while the engine is running. This is to prevent ECU (Electronic Control Unit) damage.
Do not install the battery backwards. The negative side is grounded. This is to prevent damage to the ECU.

Crankshaft Sensor Removal

- Remove:
  Right Frame Cover (see Frame Cover Removal in the Frame chapter)
  Crankshaft Sensor Lead Connector [A] (Disconnect)
  Right Middle Fairing (see Middle Fairing Removal in the Frame chapter)
  Oil Pressure Switch Lead (see Oil Pressure Switch Removal in the Engine Lubrication chapter)
  Clutch Cover (see Clutch Cover Removal in the Clutch chapter)

- Remove:
  Bolts [A]
  Crankshaft Sensor [B]
- Pull out the grommet [C].

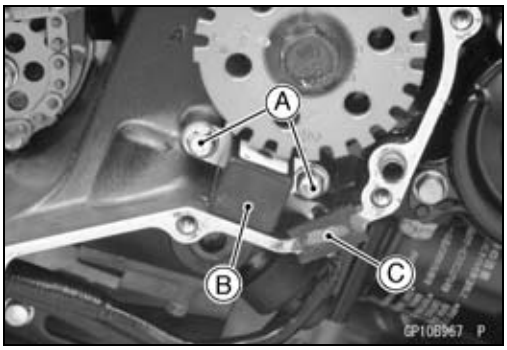

Crankshaft Sensor Installation

- Run the crankshaft sensor lead correctly (see Cable, Wire, and Hose Routing section in the Appendix chapter).
- Install the crankshaft sensor [A].
- Tighten:

  Torque - Crankshaft Sensor Bolts [B]: 6.0 N·m (0.60 kgf·m, 53 in·lb)

- Clean off any oil or dirt and apply liquid gasket to the circumference of the crankshaft sensor lead grommet [C].

  Sealant - Liquid Gasket, TB1211F: 92104-0004

- Install the grommet to the crankcase, and connect the crankshaft sensor lead connector.
- Install the removed parts (see appropriate chapters).

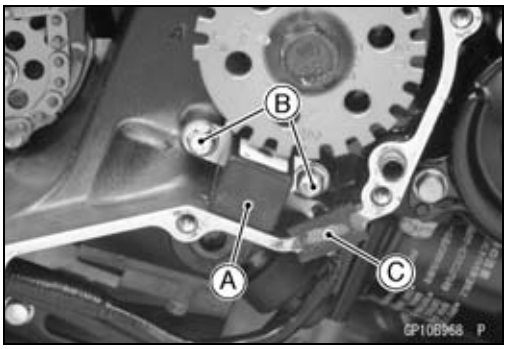

Crankshaft Sensor Inspection

- Remove the right frame cover (see Frame Cover Removal in the Frame chapter).
- Disconnect the crankshaft sensor lead connector [A].
- Set the hand tester to the × 10 Ω range and connect (+) lead to the yellow lead and (–) lead to the black lead in the connector.

Special Tool - Hand Tester: 57001-1394

Crankshaft Sensor Resistance:
Standard: 376 ~ 564 Ω

★If there is more resistance than the specified value, the coil has an open lead and must be replaced. Much less than this resistance means the coil is shorted, and must be replaced.

- Using the highest resistance range of the tester, measure the resistance between the crankshaft sensor leads and chassis ground.

★Any tester reading less than infinity (∞) indicates a short, necessitating replacement of the crankshaft sensor assembly.

Crankshaft Sensor Peak Voltage Inspection

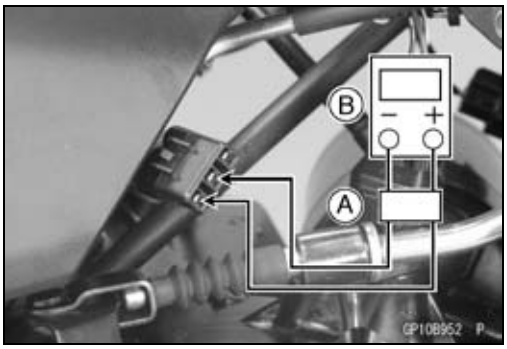

NOTE

○*Be sure the battery is fully charged.*
○*Using the peak voltage adapter [A] is a more reliable way to determine the condition of the crankshaft sensor than crankshaft sensor internal resistance measurements.*

- Disconnect the crankshaft sensor lead connector (see Crankshaft Sensor Removal).
- Set the hand tester [B] to the × DC 10 V range, and connect it peak voltage adapter.
- Connect the black lead of the peak voltage adapter to black lead and red lead to yellow lead in the crankshaft sensor connector.
- Turn the ignition switch to ON and the engine stop switch to run position.

- Pushing the starter button, turn the engine 4 ~ 5 seconds with the transmission gear in neutral to measure the crankshaft sensor peak voltage.
- Repeat the measurement 5 times or more.

Crankshaft Sensor Peak Voltage
Standard: 2.0 V or more

Special Tools - Hand Tester: 57001-1394
Peak Voltage Adapter: 57001-1415
Type: KEK-54-9-B

★If the tester reading is not the specified one, check the crankshaft sensor (see Crankshaft Sensor Inspection).

Ignition System

Timing Rotor Removal

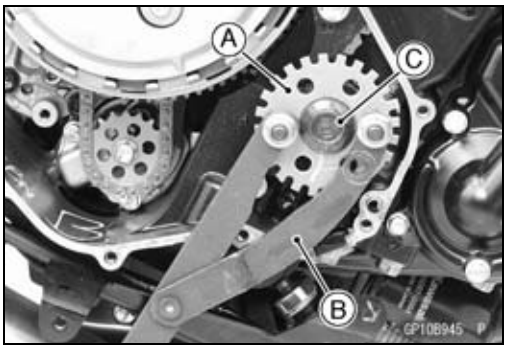

- Remove:
  Clutch Cover (see Clutch Cover Removal in the Clutch chapter)
  Crankshaft Sensor (see Crankshaft Sensor Removal)
- Hold the timing rotor [A] steady with the flywheel & pulley holder [B].

  Special Tool - Flywheel & Pulley Holder: 57001-1605
- Remove:
  Timing Rotor Bolt [C]
  Timing Rotor

Timing Rotor Installation

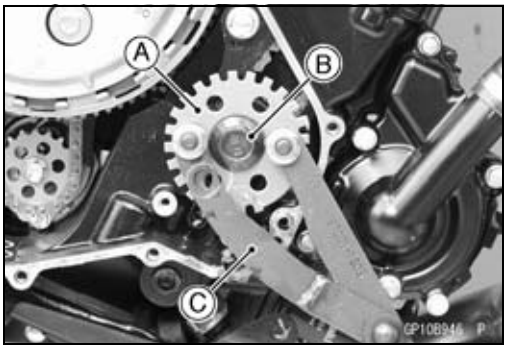

- Fit the timing rotor [A] to the crankshaft.
- Tighten the timing rotor bolt [B] while holding the timing rotor steady with the flywheel & pulley holder [C].

  Special Tool - Flywheel & Pulley Holder: 57001-1605

  Torque - Timing Rotor Bolt: 40 N·m (4.1 kgf·m, 30 ft·lb)
- Install the removed parts (see appropriate chapters).

Stick Coil Removal

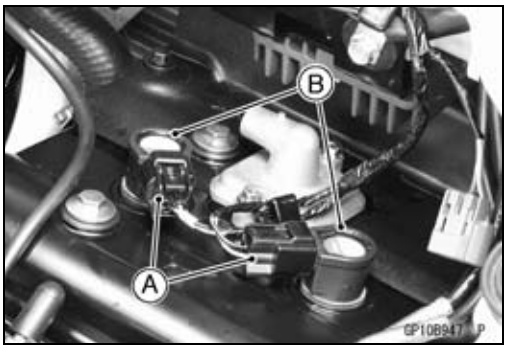

- Remove the air cleaner housing (see Air Cleaner Housing Removal in the Fuel System (DFI) chapter).
- Disconnect:
  Air Switching Valve (see Air Switching Valve Removal in the Engine Top End chapter)
  Stick Coil Connectors [A]
- Pull out the stick coils [B].

NOTICE
Do not pry the connector part of the coil while removing the coil.

Stick Coil Installation

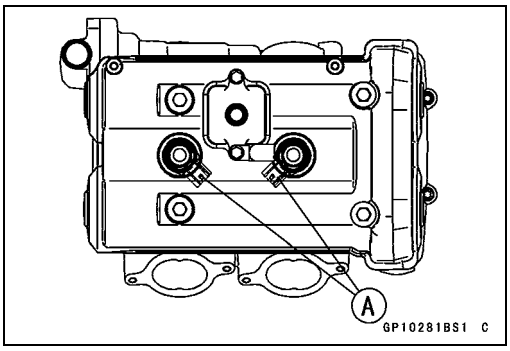

- Insert the coil as shown being careful of the coil heads [A] direction.

NOTICE
Do not tap the coil head while installing the coil.

- Connect the stick coil connectors.
- Run the hoses and harness correctly (see Cable, Wire, and Hose Routing section in the Appendix chapter).
- Install the removed parts (see appropriate chapters).

Stick Coil Inspection

● Remove the stick coils (see Stick Coil Removal).
● Measure the primary winding resistance [A] as follows.
○Connect the hand tester between the coil terminals.
○Set the tester to the × 1 Ω range, and read the tester.
● Measure the secondary winding resistance [B] as follows.
○Connect the hand tester between the plug terminal and (–) coil terminal.
○Set the tester to the × 1 kΩ range and read the tester.

Stick Coil Winding Resistance
Primary Windings: 1.1 ~ 1.5 Ω at 20°C (68°F)
Secondary Windings: 10.8 ~ 16.2 kΩ at 20°C (68°F)

★If the tester does not read as specified, replace the coil.
● Install the stick coils (see Stick Coil Installation).

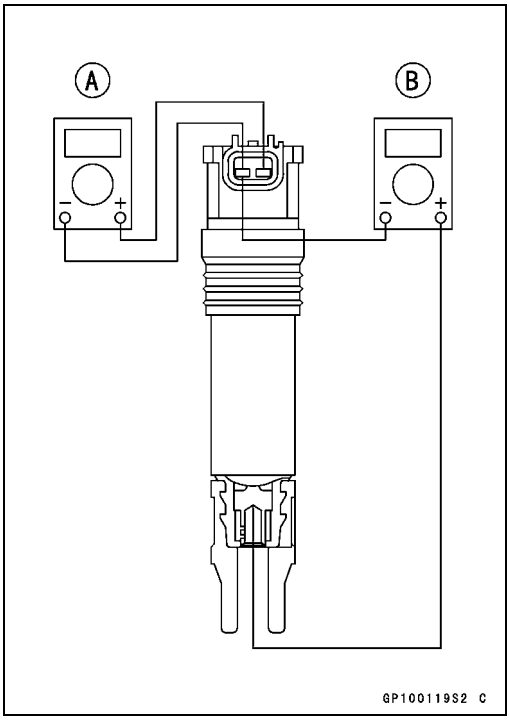

Stick Coil Primary Peak Voltage Inspection

NOTE

○*Be sure the battery is fully charged.*

● Remove the stick coils (see Stick Coil Removal).
● Measure the primary peak voltage as follows.
○Install the new spark plug [A] into each stick coil [B], and ground them onto the engine.
○Connect the peak voltage adapter [C] to the hand tester [D] which is set to the × DC 250 V range.
○Connect the adapter to the lead wire-peak voltage adapter [E] which is connected between the stick coil connector and stick coil.
ECU [F]
Battery [G]

Special Tools - Hand Tester: 57001-1394
Peak Voltage Adapter: 57001-1415
Type: KEK-54-9-B
Lead Wire-Peak Voltage Adapter: 57001-1449

Primary Lead Connection
Adapter (R, +) to lead wire-peak voltage adapter (R)
Adapter (BK, –) to lead wire-peak voltage adapter (W)

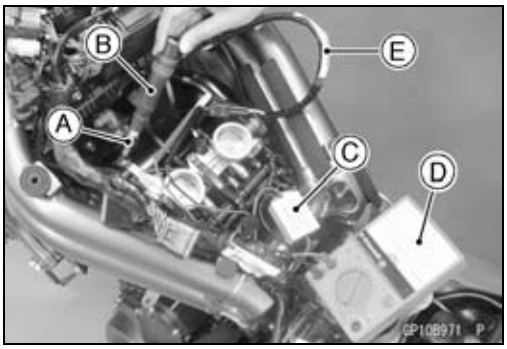

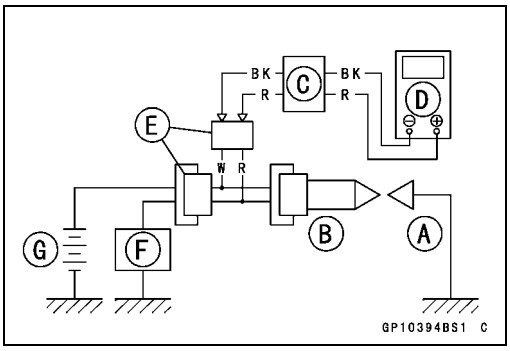

Ignition System

⚠ WARNING

To avoid extremely high voltage shocks, do not touch the spark plugs or tester connections.

- Turn the ignition switch to ON and the engine stop switch to run position.
- Pushing the starter button, turn the engine 4 ~ 5 seconds with the transmission in neutral to measure the primary peak voltage.
- Repeat the measurement 5 times or more for one stick coil.

Stick Coil Primary Peak Voltage
Standard: 117 V or more

- Repeat the test for the other stick coil.

★If the reading is less than the specified value, check the following.
Stick Coils (see Stick Coil Inspection)
Crankshaft Sensor (see Crankshaft Sensor Inspection)
ECU (see ECU Power Supply Inspection in the Fuel System (DFI) chapter)

- Install the stick coils (see Stick Coil Installation).

Spark Plug Removal

- Refer to the Spark Plug Replacement in the Periodic Maintenance chapter.

Spark Plug Installation

- Refer to the Spark Plug Replacement in the Periodic Maintenance chapter.

Spark Plug Condition Inspection

- Remove the spark plugs (see Spark Plug Replacement in the Periodic Maintenance chapter).
- Visually inspect the spark plugs.

★If the spark plug center electrode [A] and/or side electrode [B] are corroded or damaged, or if the insulator [C] is cracked, replace the plug.

★If the spark plug is dirtied or the carbon is accumulated, replace the spark plug.

- Measure the gap [D] with a wire-type thickness gauge.

★If the gap is incorrect, replace the spark plug.

Spark Plug Gap: 0.8 ~ 0.9 mm (0.03 ~ 0.04 in.)

- Use the standard spark plug or its equivalent.

Spark Plug: NGK CR9EIA-9

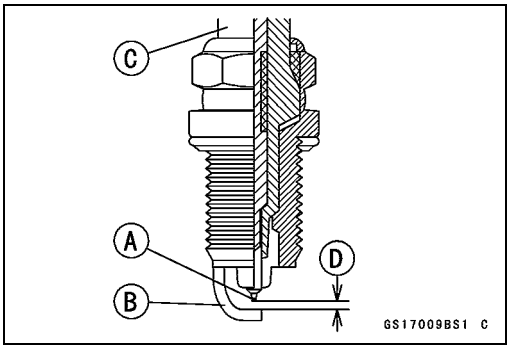

Interlock Operation Inspection

● Raise the rear wheel off the ground with a stand.

1st Check

● Start the engine in the following conditions.

Condition

Transmission Gear → 1st Position

Clutch Lever → Release

Sidestand → Down or Up

○Turn the ignition switch to ON and push the starter button.
○Then the starter motor should not turn when the starter system circuit is normal.
★If the engine starts, inspect the starter lockout switch, neutral switch and relay box.

2nd Check

● Start the engine in the following conditions.

Condition

Transmission Gear → 1st Position

Clutch Lever → Pulled in

Sidestand → Up

○Turn the ignition switch to ON and push the starter button.
○Then the starter motor should turn when the starter system circuit is normal.
★If the starter motor is not turn, inspect the starter lockout switch, sidestand switch, relay box and starter relay.

3rd Check

● Inspect the engine for its secure stop after the following operations are completed.
● Run the engine in the following conditions.

Condition

Transmission Gear → 1st Position

Clutch Lever → Release

Sidestand → Up

● Set the sidestand on the ground, then the engine should stop.
★If the engine does not stop, inspect the neutral switch, sidestand switch and relay box.
★If their parts are normal, replace the ECU (see ECU Removal/Installation in the Fuel System (DFI) chapter).

IC Igniter Inspection

○The IC igniter is built in the ECU [A].
● Refer to the Interlock Operation Inspection, Ignition System Troubleshooting chart and Fuel System (DFI) chapter for ECU Power Supply Inspection.

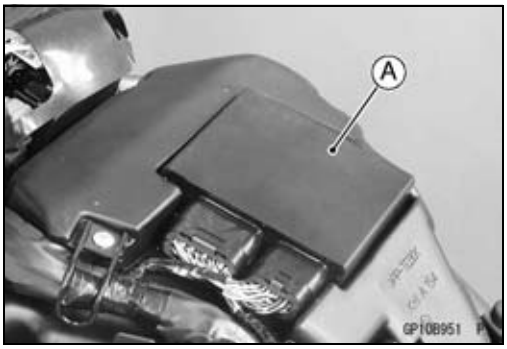

Ignition System

Ignition System Troubleshooting

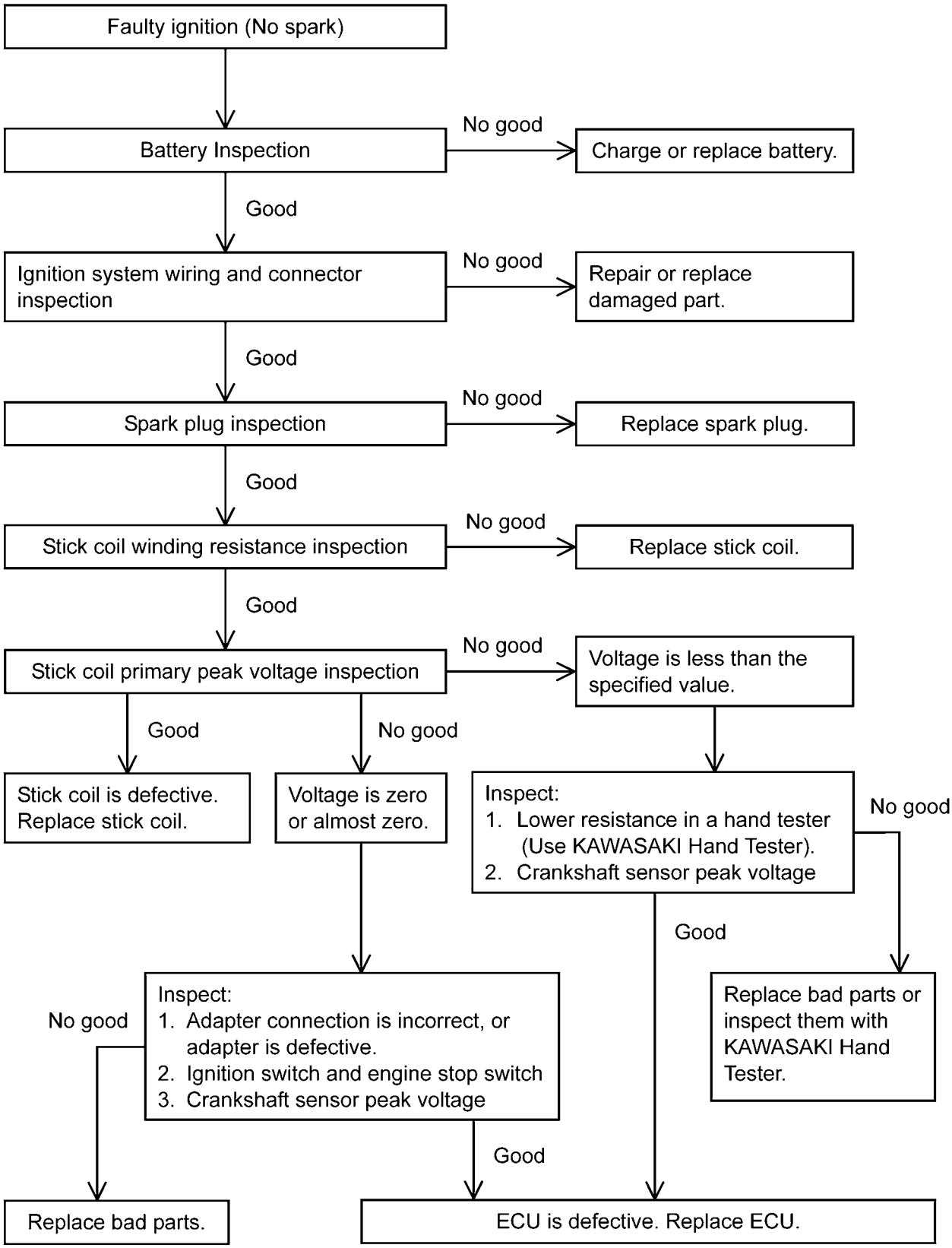

GP10280B F

Ignition System

Ignition System Circuit

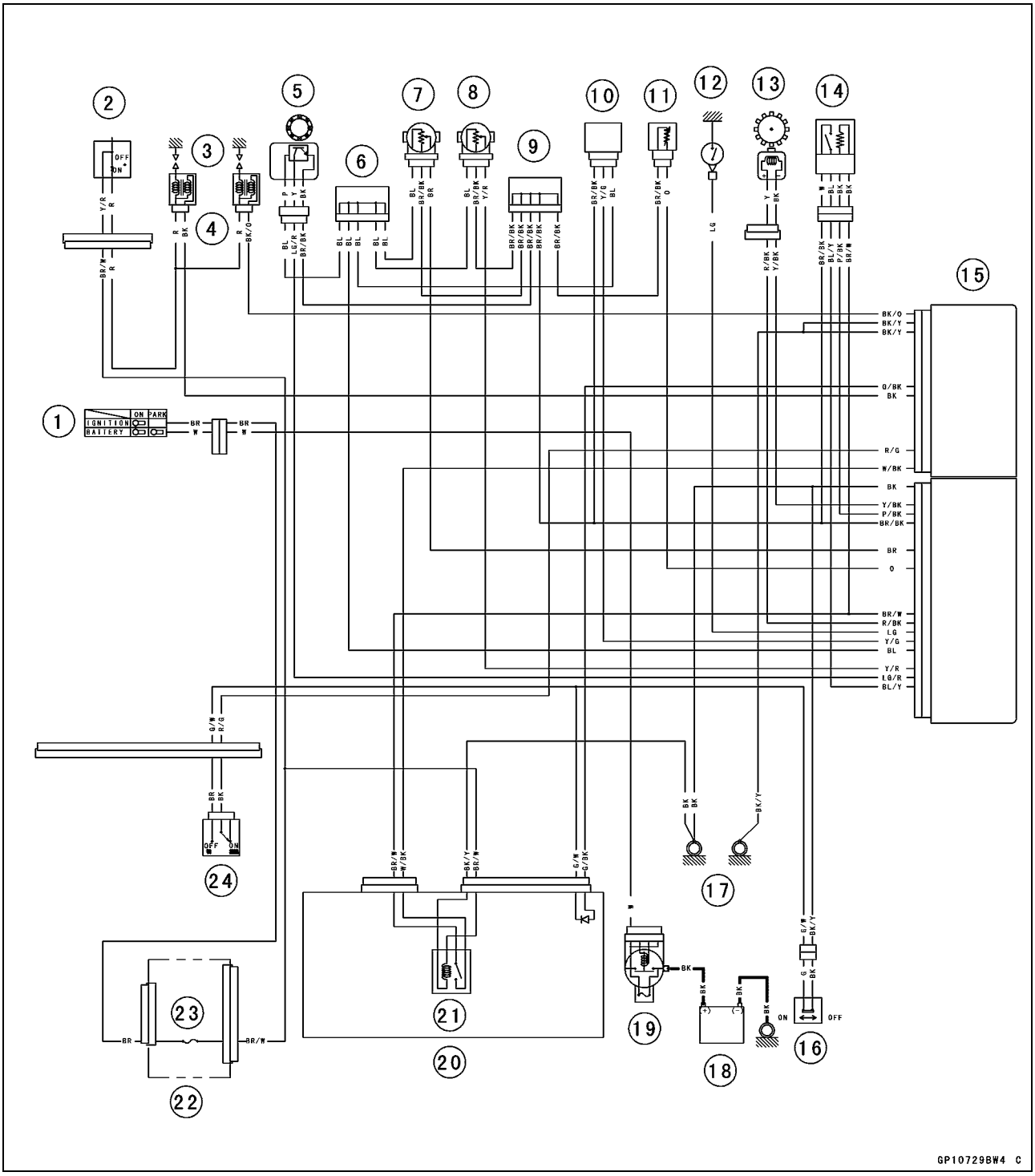

1. Ignition Switch
2. Engine Stop Switch
3. Spark Plugs
4. Stick Coils
5. Speed Sensor
6. Joint Connector C
7. Subthrottle Sensor
8. Main Throttle Sensor
9. Joint Connector D
10. Vehicle-down Sensor
11. Water Temperature Sensor
12. Neutral Switch
13. Crankshaft Sensor
14. Oxygen Sensor (Equipped Models)
15. ECU
16. Sidestand Switch
17. Frame Ground
18. Battery 12 V 10 Ah
19. Main Fuse 30 A
20. Relay Box
21. ECU Main Relay
22. Fuse Box
23. Ignition Fuse 10 A
24. Starter Lockout Switch

Electric Starter System

Starter Motor Removal

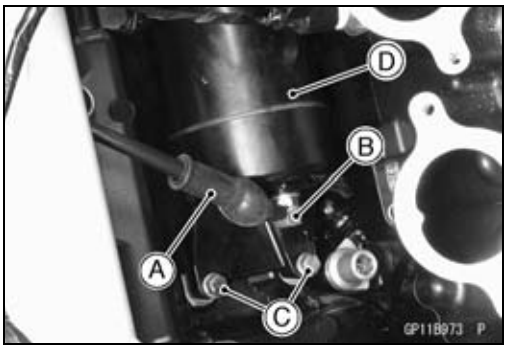

NOTICE

Do not tap the starter motor shaft or body. Tapping the shaft or body could damage the motor.

- Remove:
  Fuel Tank (see Fuel Tank Removal in the Fuel System (DFI) chapter)
  Air Cleaner Housing (see Air Cleaner Housing Removal in the Fuel System (DFI) chapter)
  Throttle Body Assy (see Throttle Body Assy Removal in the Fuel System (DFI) chapter)
  Throttle Body Assy Holder (see Throttle Body Assy Holder Removal in the Engine Top End chapter)
- Slide out the rubber cap [A].
- Remove the starter motor cable terminal nut [B].
- Remove the mounting bolts [C].
- Pull out the starter motor [D].

Starter Motor Installation

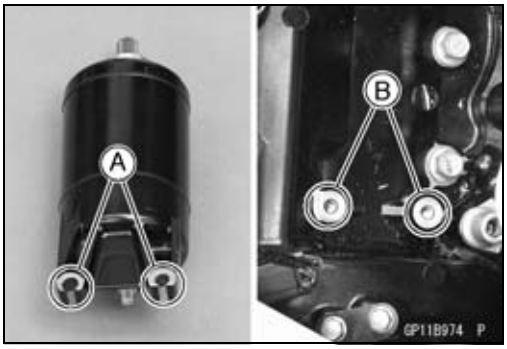

NOTICE

Do not tap the starter motor shaft or body. Tapping the shaft or body could damage the motor.

- Before installing the starter motor, clean the starter motor legs [A] and crankcase [B] where the starter motor is grounded.

- Replace the O-ring [A] with a new one.
- Apply grease to the O-ring.
- Install the starter motor to the crankcase.
- Apply a non-permanent locking agent to the threads of the bolts and tighten them.

  Torque - Starter Motor Mounting Bolts: 9.8 N·m (1.0 kgf·m, 87 in·lb)

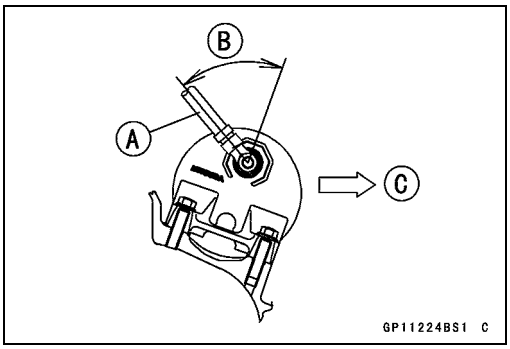

- Install the starter motor cable [A] as shown.
  About 60° [B]
  Front [C]
- Tighten:

  Torque - Starter Motor Cable Terminal Nut: 6.0 N·m (0.61 kgf·m, 53 in·lb)
- Slide back the rubber cap to the original position.
- Install the other removed parts (see appropriate chapters).

Starter Motor Disassembly

- Remove the starter motor (see Starter Motor Removal).
- Take off the starter motor through bolts [A] and remove the both end covers [B].

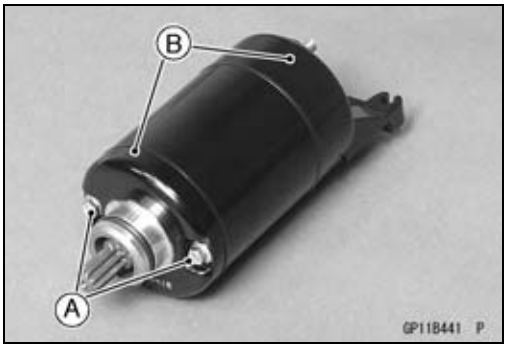

- Pull out the armature [A] out of the yoke [B].

NOTE

○*Do not remove the circlip [C] from the shaft.*

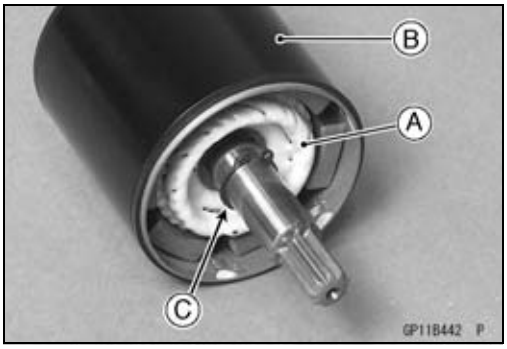

- Remove:
  Starter Motor Terminal Locknut [A]
  Washer [B]
  Collar [C]

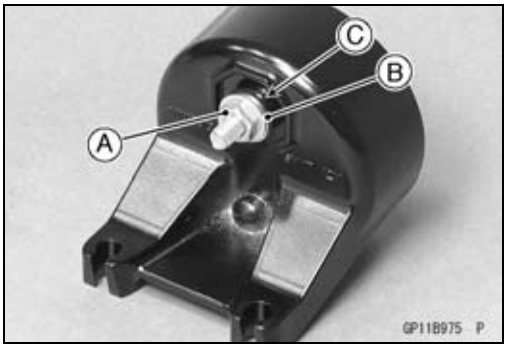

- Pull out the brushes from the brush holder [A].
- Remove:
  Brush Springs [B]
  Starter Motor Terminal [C]
  Positive Brush Assembly [D]
  Screw [E]
  Negative Brush Assembly [F]
  Brush Holder

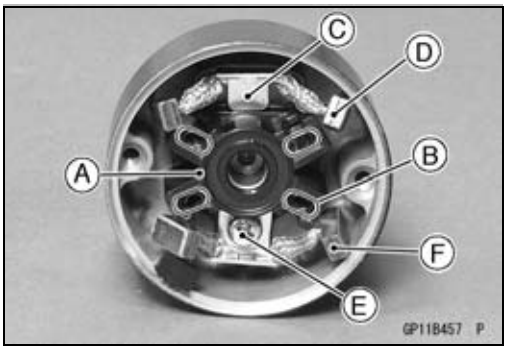

Starter Motor Assembly

- Be sure that the stopper [A] is in position.
- Align the hole [B] on the brush holder [C] with the boss [D] on the right-hand end cover [E].

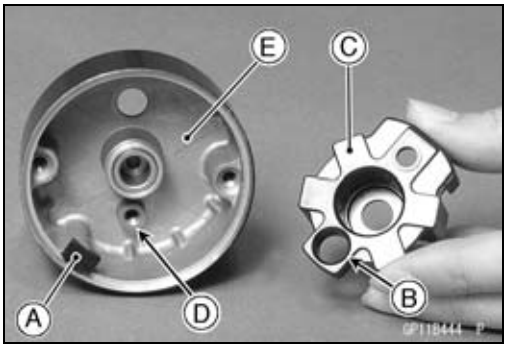

Electric Starter System

- Align the stoppers [A] on the negative brush assembly [B] with the grooves [C] on the brush holder [D].
- Tighten the screw securely.

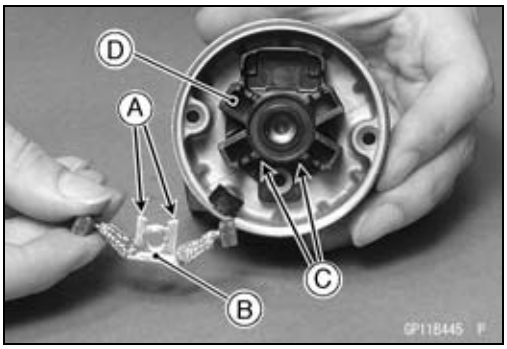

- Align the stoppers [A] on the positive brush assembly [B] with the grooves [C] on the brush holder [D].
- Install the starter motor terminal.

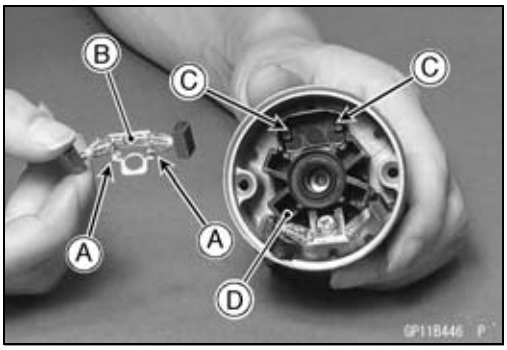

- Replace the O-ring [A] with a new one.
- Apply grease to the new O-ring.
- Install the following parts to the starter motor terminal [B].
  O-ring
  Collar [C]
  Washer [D]
  Starter Motor Terminal Locknut [E]

○Install the collar so that the stepped side faces outward.

- Tighten:

Torque - Starter Motor Terminal Locknut: 11 N·m (1.1 kgf·m, 97 in·lb)

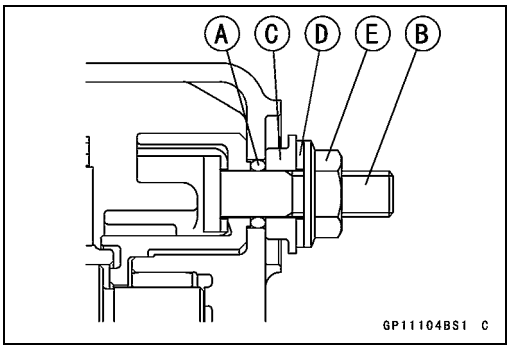

- Install the brush springs [A] and insert the brushes [B].

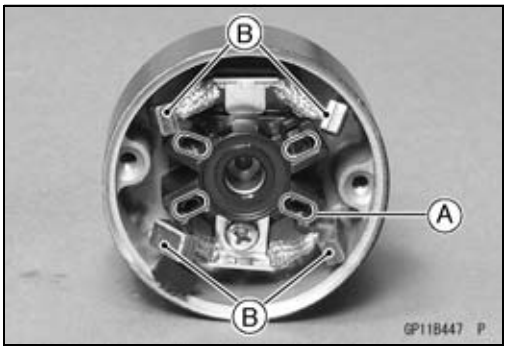

● Apply thin coat of grease to the oil seal [A].

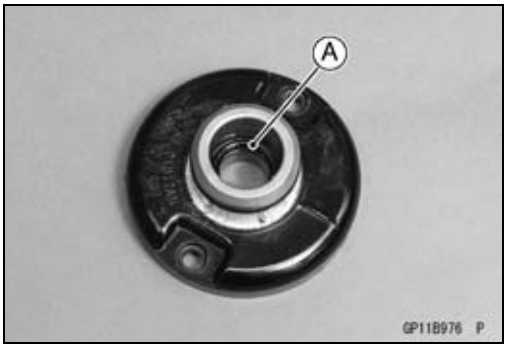

● Replace the O-rings [A] with new ones.
● Insert the armature [B] so that commutator side [C] faces hollow side [D] of the yoke [E].

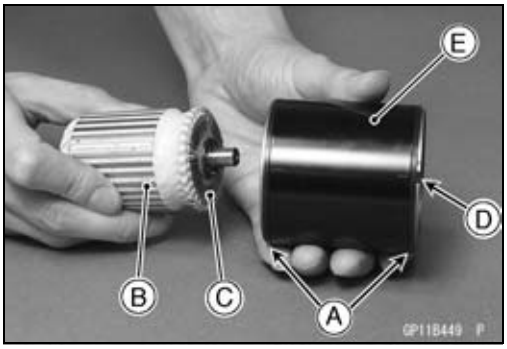

● Align the marks [A] to assembly the yoke and the end covers [B].

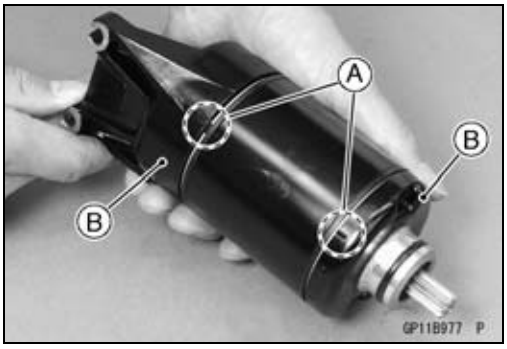

● Replace the O-rings [A] with new ones.
● Tighten:

Torque - Starter Motor Through Bolts [B]: 5.0 N·m (0.51 kgf·m, 44 in·lb)

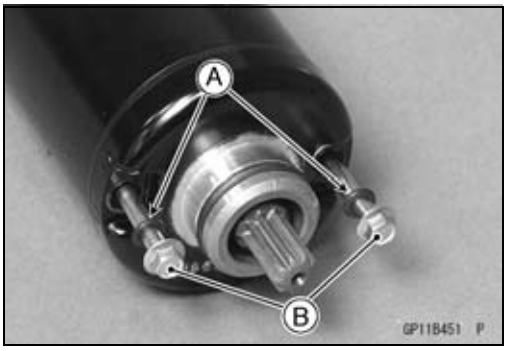

Brush Inspection

● Measure the length of each brush [A].
★If any is worn down to the service limit, replace the brush assembly.

Starter Motor Brush Length
Standard: 12 mm (0.47 in.)
Service Limit: 6.5 mm (0.26 in.)

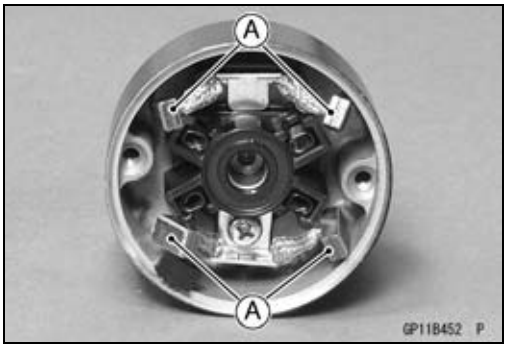

Electric Starter System

Commutator Cleaning and Inspection

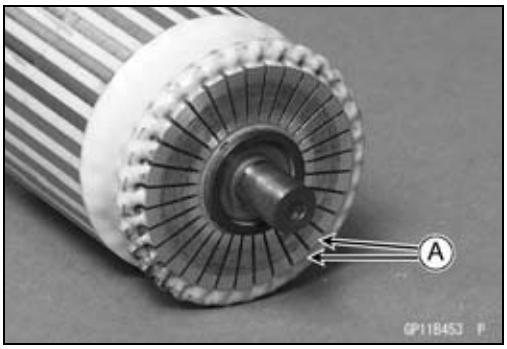

- Clean the metallic debris off the between commutator segments [A].

NOTE

○*Do not use emery or sand paper on the commutator.*

- Check the commutator for damage or abnormal wear.

★Replace the starter motor with a new one if there is any damage or wear.

- Visually inspect the commutator segments for discoloration.

★Replace the starter motor with a new one if discoloration is noticed.

Armature Inspection

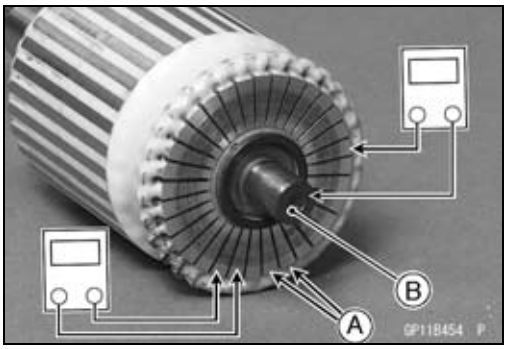

- Using the × 1 Ω hand tester range, measure the resistance between any two commutator segments [A].

Special Tool - Hand Tester: 57001-1394

★If there is a high resistance or no reading (∞) between any two segments, a winding is open and the starter motor must be replaced.

- Using the highest hand tester range, measure the resistance between the segments and the shaft [B].

★If there is any reading at all, the armature has a short and the starter motor must be replaced.

NOTE

○*Even if the foregoing checks show the armature to be good, it may be defective in some manner not readily detectable with the hand tester. If all other starter motor and starter motor circuit components check good, but the starter motor still does not turn over or only turns over weakly, replace the starter motor with a new one.*

Brush Lead Inspection

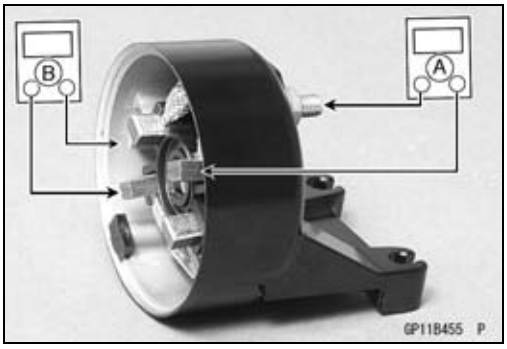

- Using the × 1 Ω hand tester range, measure the resistance as shown.
  Terminal Bolt and Positive Brushes [A]
  Right-hand End Cover and Negative Brushes [B]

Special Tool - Hand Tester: 57001-1394

★If there is not close to zero ohms, the brush lead has an open. Replace the brush assembly.

Right-hand End Cover Inspection

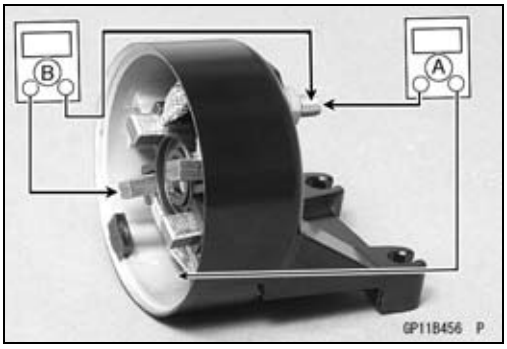

- Using the highest tester range, measure the resistance as shown.
  Terminal Bolt and Right-hand End Cover [A]
  Terminal Bolt and Negative Brushes [B]

  Special Tool - Hand Tester: 57001-1394

★If there is any reading, the brush assy and/or terminal bolt assy have a short. Replace the starter motor.

Starter Relay Inspection

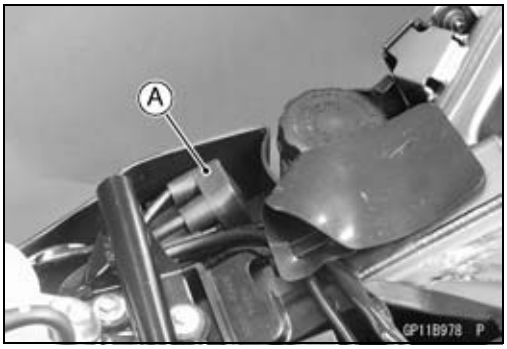

- Remove the front seat (see Front Seat Removal in the Frame chapter).
- Pull out the starter relay [A] from the bracket.

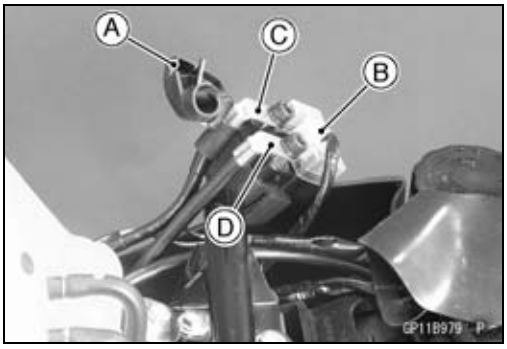

- Slide out the cap [A].
- Disconnect:
  Connector [B]
  Starter Motor Cable [C]
  Battery Positive (+) Cable [D]
- Remove the starter relay.

NOTICE
The battery positive (+) cable with the rubber cap is connected directly to the battery positive (+) terminal even when the ignition switch to OFF, so take care not to short the removed cable to chassis ground.

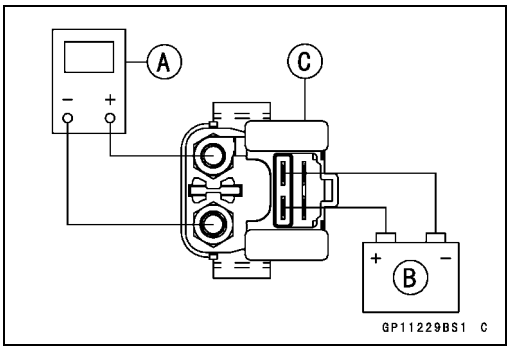

- Connect the hand tester [A] and 12 V battery [B] to the starter relay [C] as shown.

  Special Tool - Hand Tester: 57001-1394

  Testing Relay

Tester Range:	**× 1 Ω range**
Criteria:	**When battery is connected → 0 Ω**
	When battery is disconnected → ∞ Ω

★If the relay does not work as specified, the relay is defective. Replace the relay.

- Install the removed parts (see appropriate chapters).

○Tighten:

Torque - Starter Relay Terminal Bolts: 3.6 N·m (0.36 kgf·m, 31 in·lb)

Electric Starter System

Electric Starter Circuit

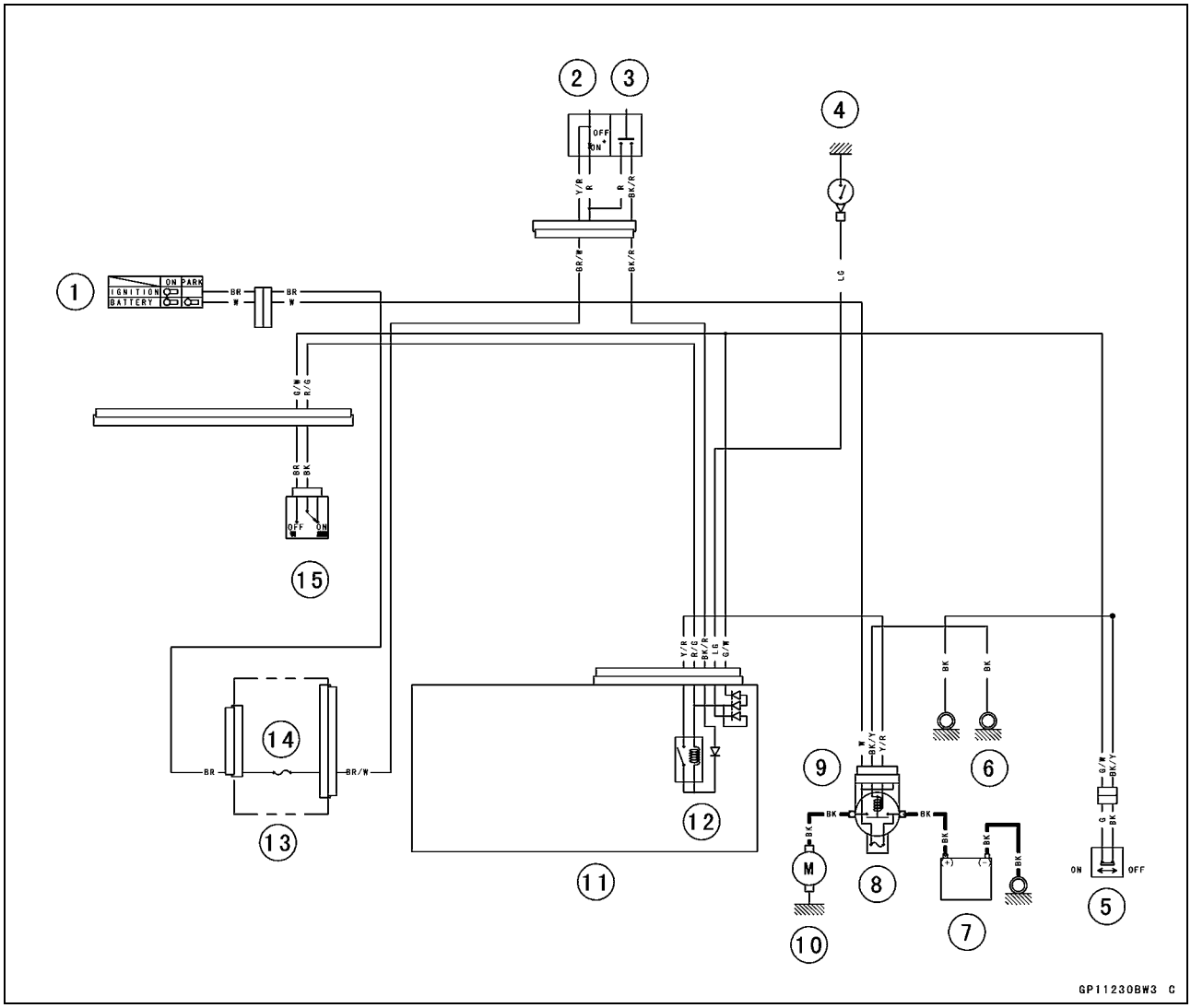

1. Ignition Switch
2. Engine Stop Switch
3. Starter Button
4. Neutral Switch
5. Sidestand Switch
6. Frame Ground
7. Battery 12 V 10 Ah
8. Main Fuse 30 A
9. Starter Relay
10. Starter Motor
11. Relay Box
12. Starter Circuit Relay
13. Fuse Box
14. Ignition Fuse 10 A
15. Starter Lockout Switch

Lighting System

This motorcycle adopt the daylight system and have a headlight circuit relay in the relay box. The headlight does not go on when the ignition switch and the engine stop switch are first turned on. The headlight comes on after the starter button is released and stays on until the ignition switch is turned off. The headlight will go out momentarily whenever the starter button is pressed and come back on when the button is released.

Headlight Beam Horizontal Adjustment

- Refer to the Headlight Aiming Inspection in the Periodic Maintenance chapter.

Headlight Beam Vertical Adjustment

- Refer to the Headlight Aiming Inspection in the Periodic Maintenance chapter.

Headlight Bulb Replacement

- Remove:
  Connector [A] (Disconnect)
  Headlight Bulb Dust Cover [B]

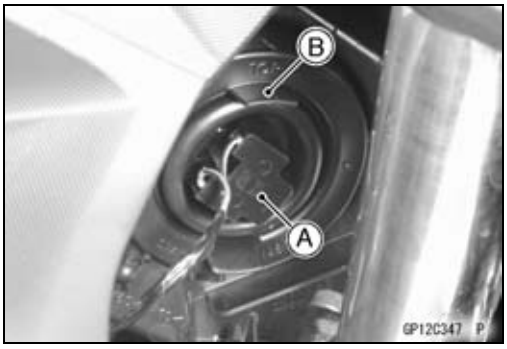

- Release the hook [A] and remove the headlight bulb [B].

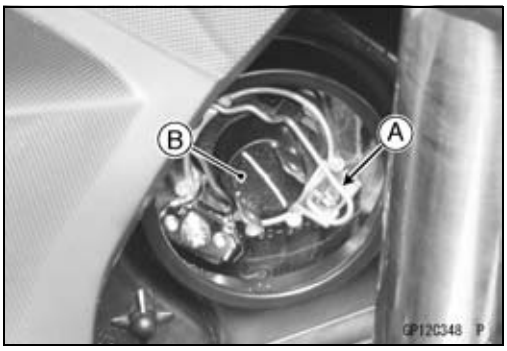

NOTICE

When handling the quartz-halogen bulb, never touch the glass portion with bare hands. Always use a clean cloth. Oil contamination from hands or dirty rags can reduce bulb life or cause the bulb to explode.

NOTE

○*Clean off any contamination that inadvertently gets on the bulb with alcohol or soap and water solution.*

- Replace the headlight bulb with a new one.
- Fit the projections [A] on the bulb in the hollows on the headlight unit.
- Install the hook [B].

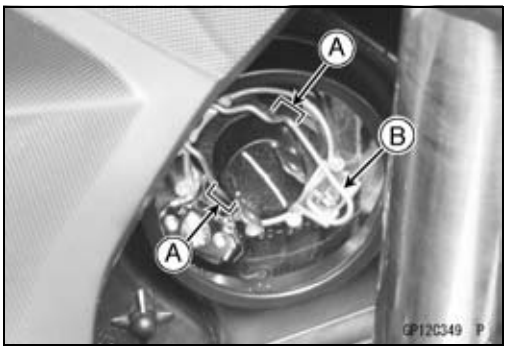

Lighting System

- Fit the dust cover [A] firmly onto the bulb so that the TOP mark [B] is aligned with the arrow mark [C] on the headlight unit.
- Connect the connector.
- After installation, adjust the headlight aim (see Headlight Aiming Inspection in the Periodic Maintenance chapter).

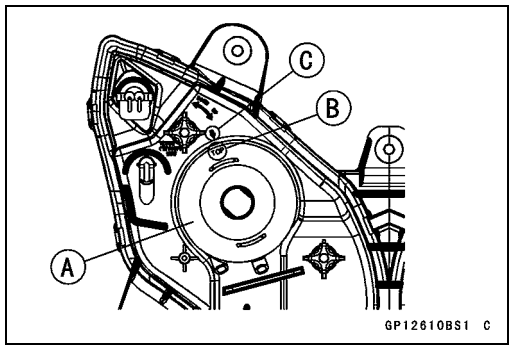

City Light Bulb Replacement

- Pull out the socket [A] together with the bulb.

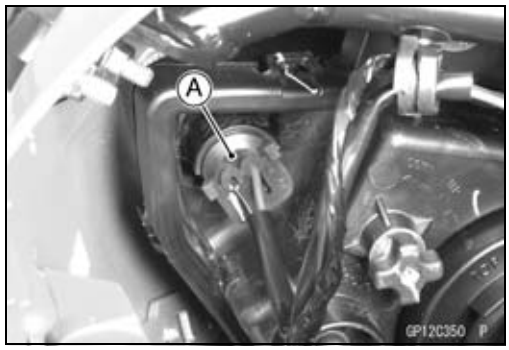

- Pull the bulb [A] out of the socket [B].

NOTICE

Do not turn the bulb. Pull the bulb out to prevent damage to the bulb. Do not use bulb rated for greater wattage then the specified valve.

- Replace the bulb with a new one.
- Insert the socket into the headlight unit.

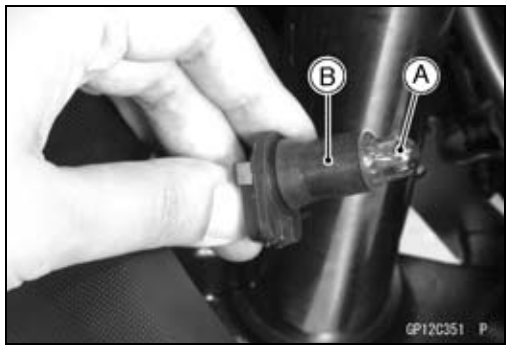

Headlight Unit Removal/Installation

- Refer to the Upper Fairing Removal/Installation in the Frame chapter.

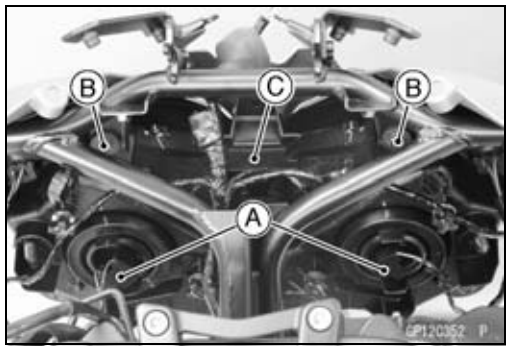

Tail/Brake Light (LED) Unit Removal

- Remove:
  Front Seat (see Front Seat Removal in the Frame chapter)
  Rear Seat Covers (see Rear Seat Cover Removal in the Frame chapter)
- Remove the tool bag.
- Disconnect the tail/brake light lead connector [A]
- Free the tail/brake light lead from the hook [B].
- Remove the tail/brake light mounting bolts [C], and take off the tail/brake light unit [D].

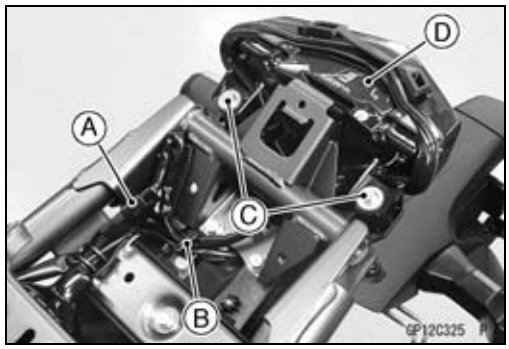

Tail/Brake Light (LED) Unit Installation

- Installation is the reverse of removal.

Lighting System

License Plate Light Bulb Replacement

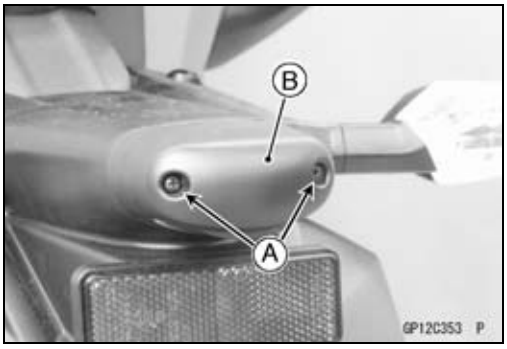

- Remove:
  Screws [A]
  License Plate Light Cover [B]

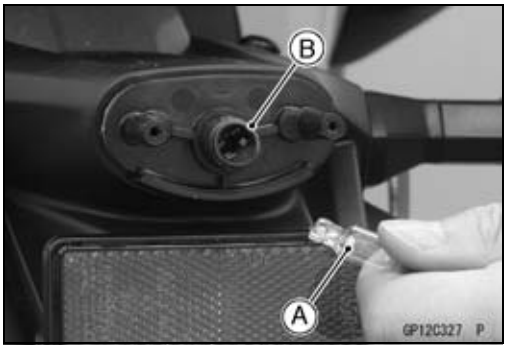

- Pull the bulb [A] out of the socket [B].

NOTICE

Do not turn the bulb. Pull the bulb out to prevent damage to the bulb. Do not use bulb rated for greater wattage then the specified valve.

- Replace the bulb with a new one.
- Insert the bulb into the socket.
- Install the license plate light cover.

Lighting System

Headlight/Tail Light Circuit

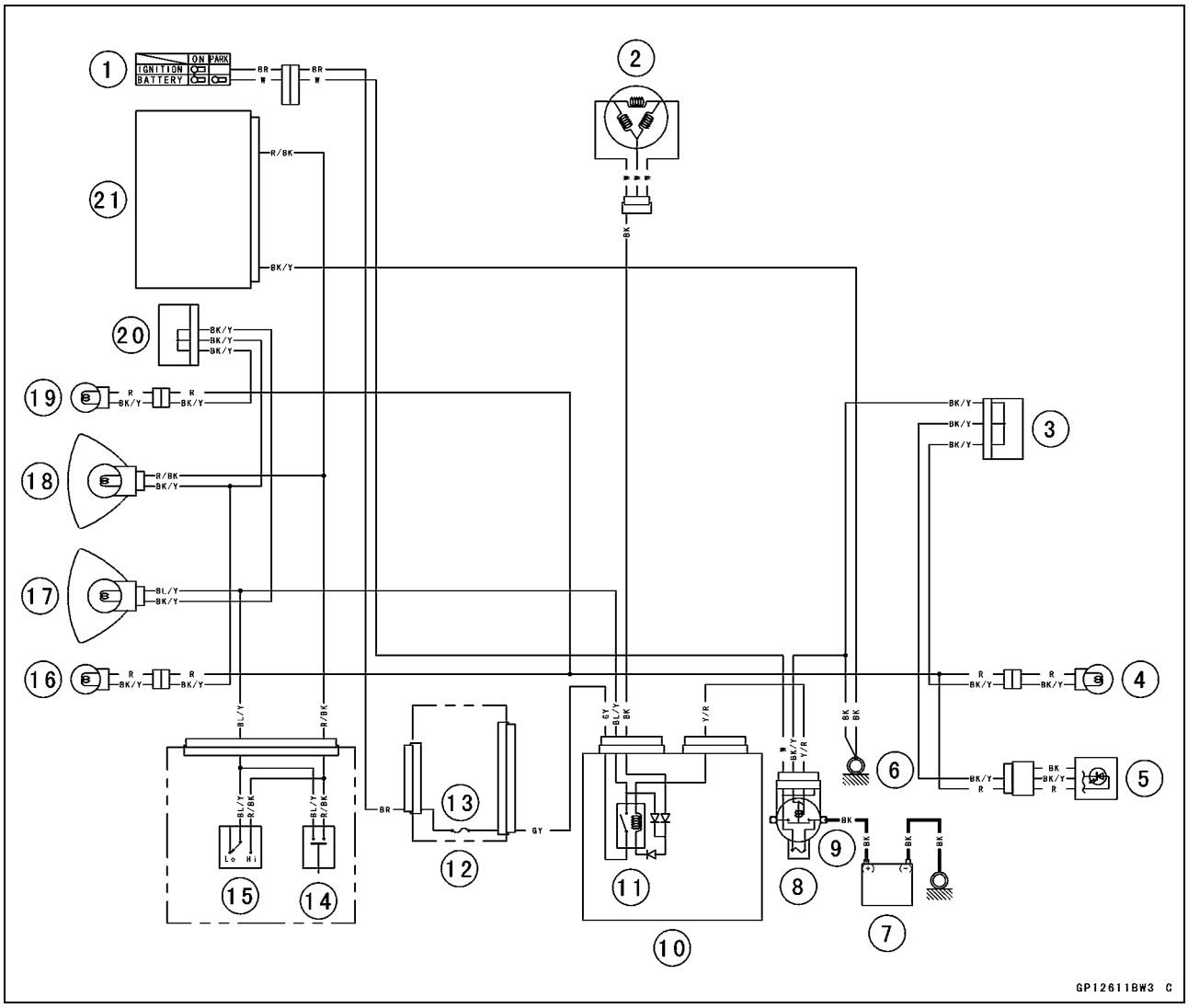

1. Ignition Switch
2. Alternator
3. Joint Connector B
4. License Plate Light 12 V 5 W
5. Tail/Brake Light (LED) 13.5 V 0.3/3.4 W
6. Frame Ground
7. Battery 12 V 10 Ah
8. Main Fuse 30 A
9. Starter Relay
10. Relay Box
11. Headlight Circuit Relay
12. Fuse Box
13. Headlight Fuse 15 A
14. Passing Button
15. Dimmer Switch
16. Left City Light 12 V 5 W
17. Headlight (Low Beam) 12 V 55 W
18. Headlight (High Beam) 12 V 55 W
19. Right City Light 12 V 5 W
20. Joint Connector A
21. Meter Unit

Front Turn Signal Light Bulb Replacement

● Turn the socket [A] counterclockwise and remove it.

● Remove the bulb [A] from the socket [B].
○Push and turn the bulb counterclockwise.

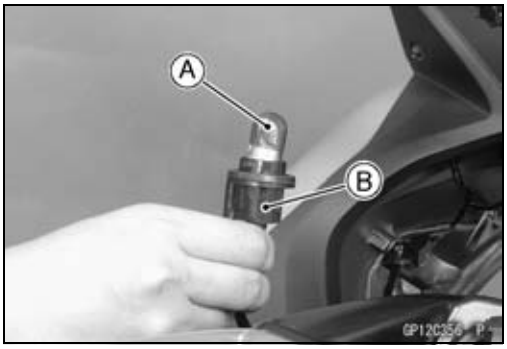

● Replace the bulb [A] with a new one.
● Insert the bulb by aligning its pins [B] with the grooves [C] in the socket, and turn the bulb clockwise.

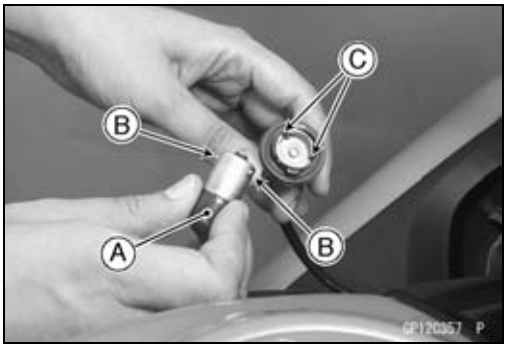

● Install the socket so that the projections [A] fit in the hollows [B] on the turn signal light.

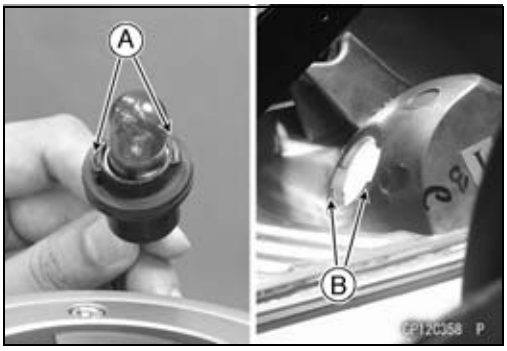

Rear Turn Signal Light Bulb Replacement

● Unscrew the screw [A] and remove the lens [B].

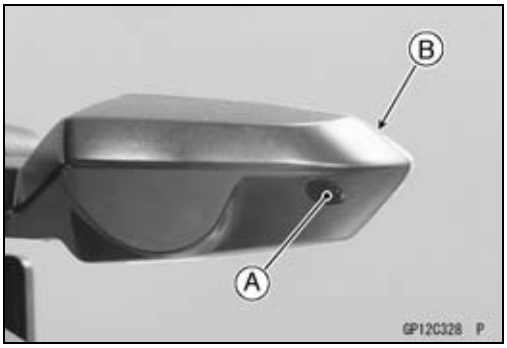

Lighting System

● Remove the bulb [A].
○Push and turn the bulb counterclockwise.

● Replace the bulb [A] with a new one.
● Insert the bulb by aligning its pins [B] with the grooves [C] in the socket, and turn the bulb clockwise.
● Install the lens and the screw.

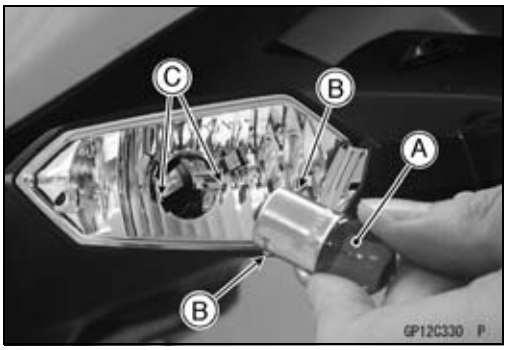

Turn Signal Relay Inspection

● Remove:
Left Middle Fairing (see Middle Fairing Removal in the Frame chapter)
Turn Signal Relay [A]

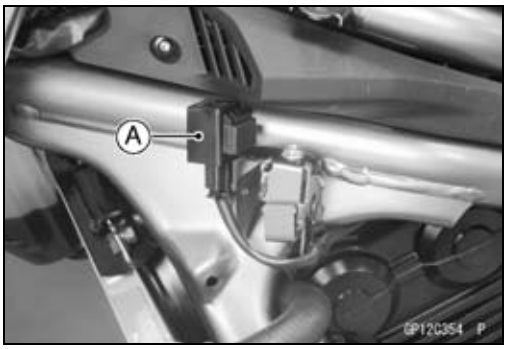

● Connect one 12 V battery and turn signal lights as indicated in the figure, and count how may times the lights blink for one minute.
Turn Signal Relay [A]
Turn Signal Lights [B]
12 V Battery [C]

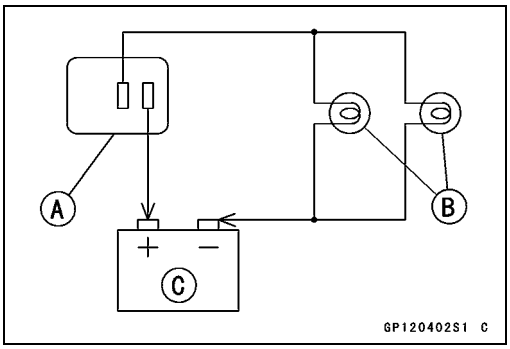

Testing Turn Signal Relay

Load		Blinking Times (c/m*)
The Number of Turn Signal Lights	Wattage (W)	
1**	10	140 ~ 250
2	20	75 ~ 95

(*): Cycle(s) per minute
(**): Correspond to “one light burned out”.

★If the lights do not blink as specified, replace the turn signal relay.

Lighting System

Turn Signal Light Circuit

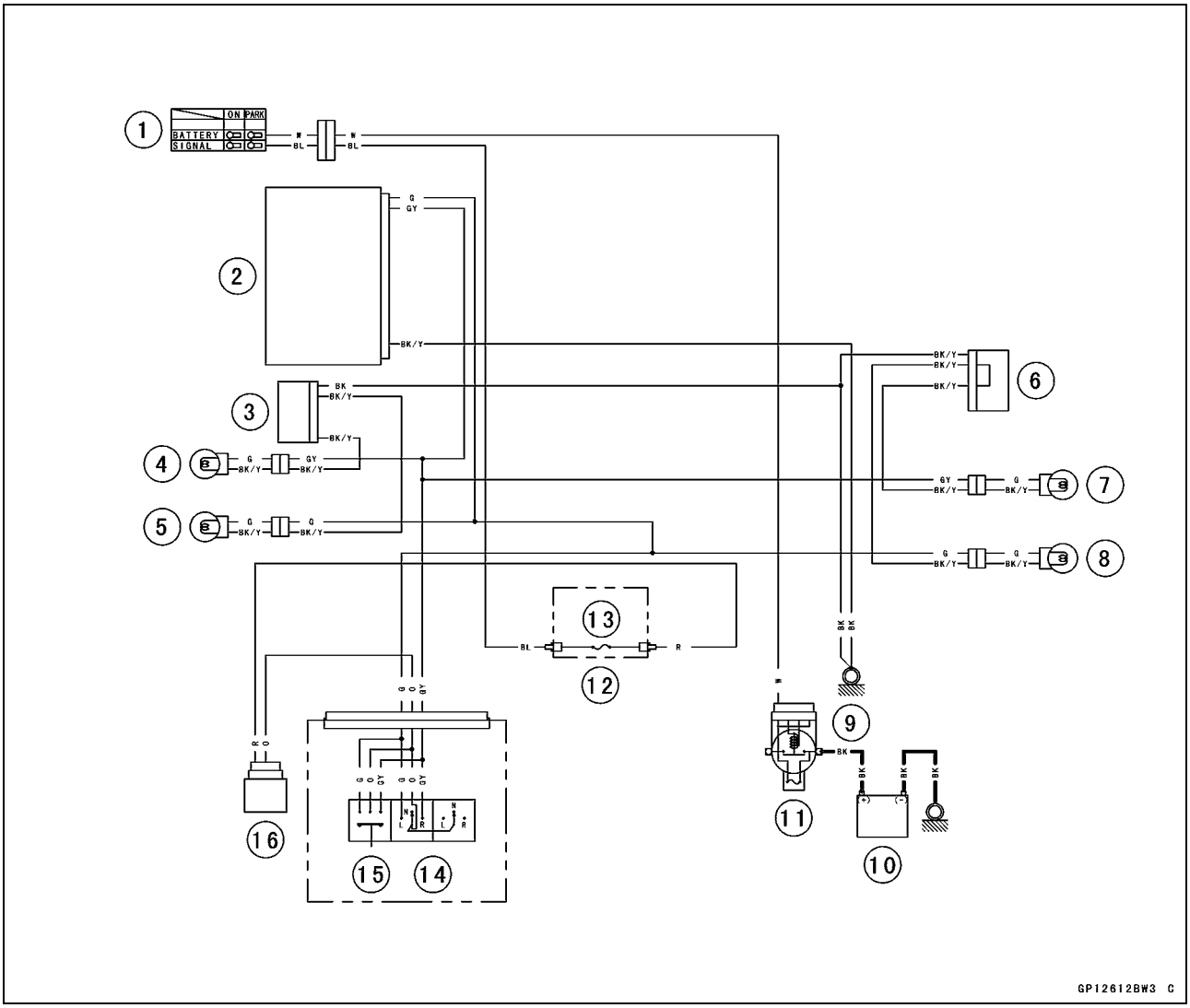

1. Ignition Switch
2. Meter Unit
3. Joint Connector A
4. Front Right Turn Signal Light 12 V 10 W
5. Front Left Turn Signal Light 12 V 10 W
6. Joint Connector B
7. Rear Right Turn Signal Light 12 V 10 W
8. Rear Left Turn Signal Light 12 V 10 W
9. Frame Ground
10. Battery 12 V 10 Ah
11. Main Fuse 30 A
12. Fuse Box
13. Turn Signal Relay Fuse 10 A
14. Turn Signal Switch
15. Hazard Button
16. Turn Signal Relay

Air Switching Valve

Air Switching Valve Operation Test

- Remove:
  Fuel Tank (see Fuel Tank Removal in the Fuel System (DFI) chapter)
  Air Cleaner Housing (see Air Cleaner Housing Removal in the Fuel System (DFI) chapter)

- Take the air switching valve hose end [A] outside of the frame [B].

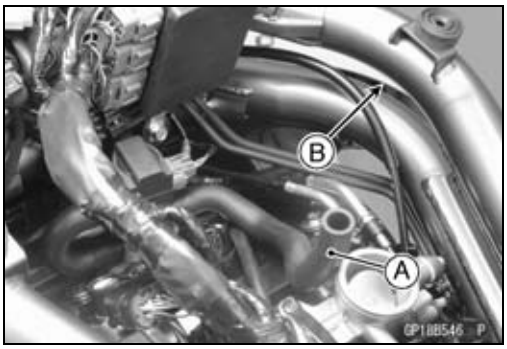

- Reinstall the air cleaner housing [A] (see Air Cleaner Housing Installation in the Fuel System (DFI) chapter).
- Connect the fuel pump lead connector [B].
- Using the extension tube [C], connect the fuel tank [D] to the throttle body.

  Special Tool - Extension Tube: 57001-1578

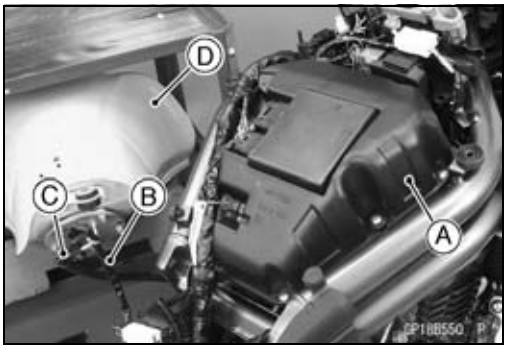

- Start the engine and run it at idle speed.
- Plug the air switching valve hose end with your finger and feel vacuum pulsing in the hose.

★If there is no vacuum pulsation, check the hose line for leak. If there is no leak, check the air switching valve (see Air Switching Valve Unit Test).

- Remove:
  Extension Tube
  Fuel Pump Lead Connector (Disconnect)
- Remove the air cleaner housing (see Air Cleaner Housing Removal in the Fuel System (DFI) chapter).

- Apply a soap and water solution or rubber lubricant to the end of the air switching valve hose [A] and install the hose on the fitting.
- Install:
  Air Cleaner Housing (see Air Cleaner Housing Installation in the Fuel System (DFI) chapter)
  Fuel Tank (see Fuel Tank Installation in the Fuel System (DFI) chapter).

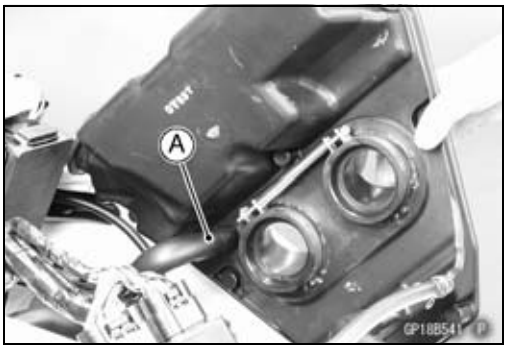

Air Switching Valve

Air Switching Valve Unit Test

- Remove the air switching valve (see Air Switching Valve Removal in the Engine Top End chapter).
- Set the hand tester [A] to the × Ω range and connect it to the air switching valve terminals as shown.

Special Tool - Hand Tester: 57001-1394

Air Switching Valve Resistance
Standard: 18 ~ 22 Ω at 20°C (68°F)

★If the resistance reading is not within the specified range, replace the air switching valve with a new one.

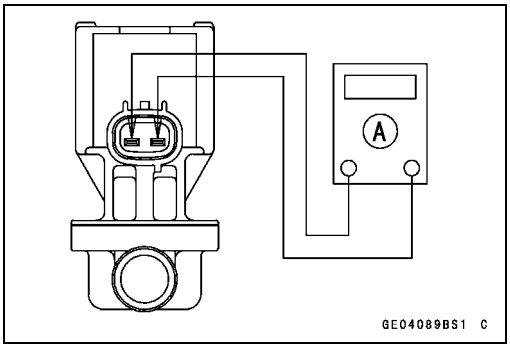

- Connect the 12 V battery [A] to the air switching valve terminals as shown.

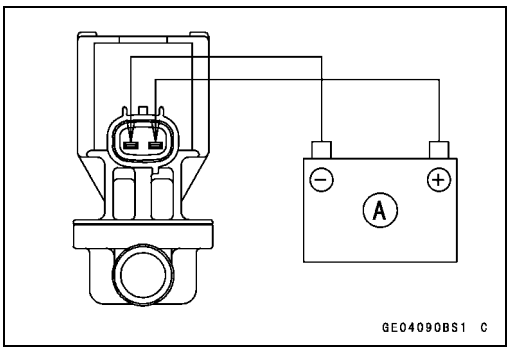

- Blow the air to the intake air duct [A], and make sure that the air does not flow through the outlet air duct [B].

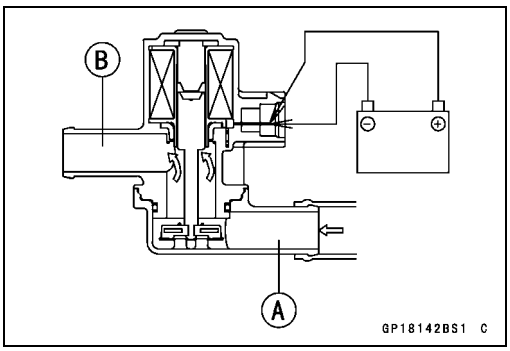

- Disconnect the 12 V battery.
- Blow the air to the intake air duct [A] again, and make sure that the air flows through the outlet air duct [B].

★If the air switching valve does not operate as described, replace it with a new one.

NOTE

○*To check air flow through the air switching valve, just blow through the air switching valve hose (intake side) [C].*

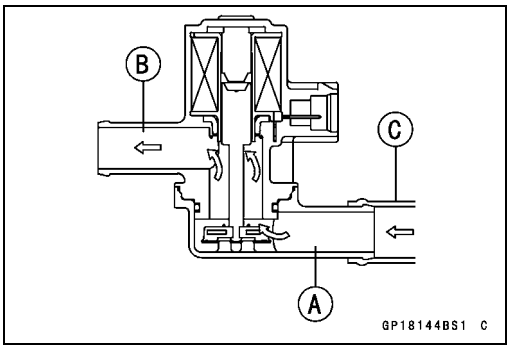

Air Switching Valve

Air Switching Valve Circuit

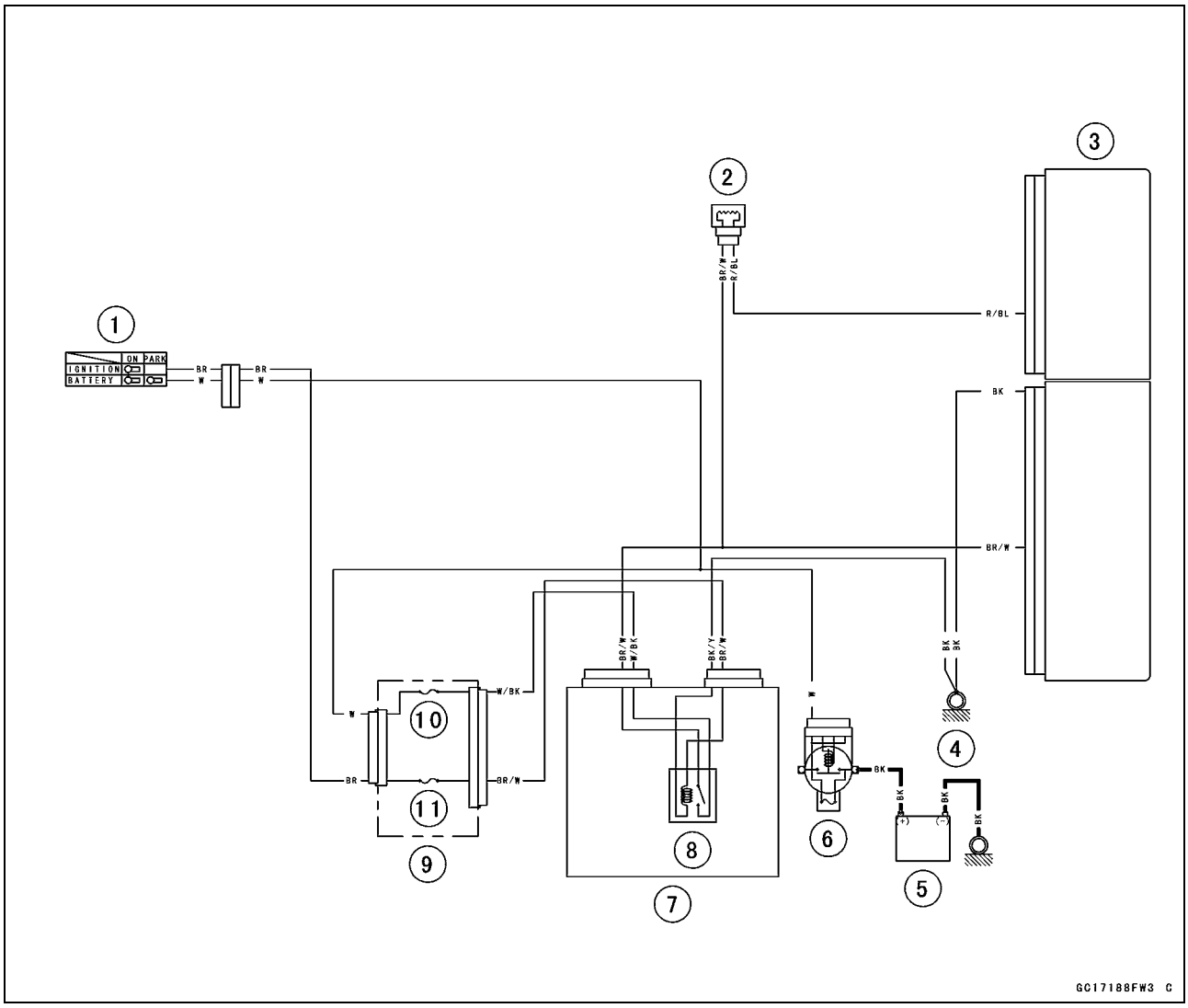

1. Ignition Switch
2. Air Switching Valve
3. ECU
4. Frame Ground 2
5. Battery 12 V 10 Ah
6. Main Fuse 30 A
7. Relay Box
8. ECU Main Relay
9. Fuse Box 1
10. FI Fuse 15 A
11. Ignition Fuse 10 A

Radiator Fan System

Fan Motor Inspection

- Remove the left middle fairing (see Middle Fairing Removal in the Frame chapter).
- Disconnect the connector [A].
- Using an auxiliary leads, supply the battery power to the fan motor.

★If the fan does not rotate, the fan motor is defective and replace it.

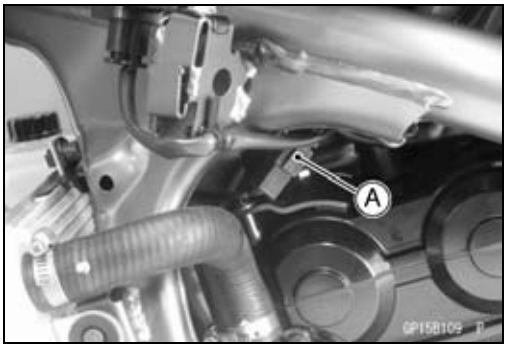

Radiator Fan Circuit

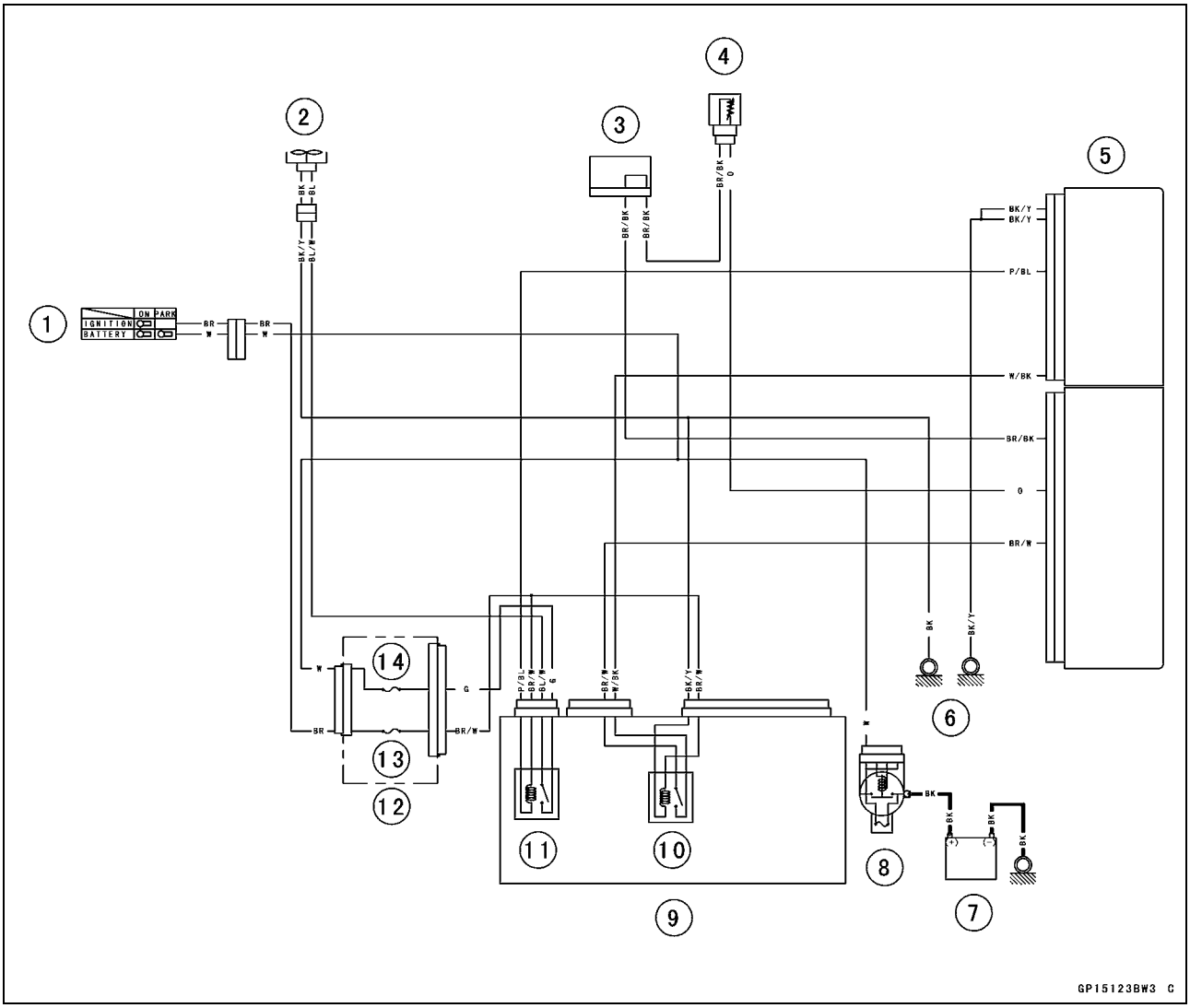

1. Ignition Switch
2. Radiator Fan
3. Joint Connector D
4. Water Temperature Sensor
5. ECU
6. Frame Ground
7. Battery 12 V 10 Ah
8. Main Fuse 30 A
9. Relay Box
10. ECU Main Relay
11. Radiator Fan Relay
12. Fuse Box
13. Ignition Fuse 10 A
14. Fan Fuse 15 A

Meter, Gauge, Indicator Unit

Meter Unit Removal

- Remove:
  Left Upper Inner Fairing (see Upper Inner Fairing Removal in the Frame chapter)
- Remove the screws [A] and washers [B] to separate the meter unit from the left upper inner fairing [C].

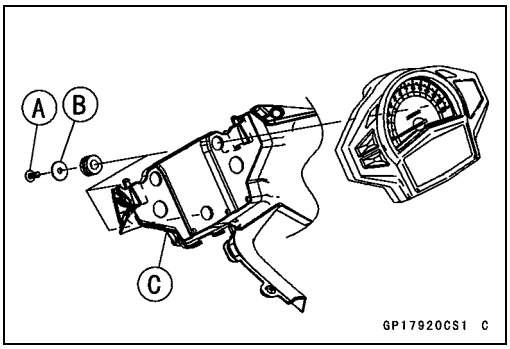

NOTICE

Place the meter unit so that the face is up. If a meter unit is left upside down or sideways for any length of time, it will malfunction.

Meter Unit Installation

- Installation is the reverse of removal.

Meter, Gauge Disassembly

- Remove:
  Meter Unit (see Meter Unit Removal)
  Screws [A]
  Upper Meter Case

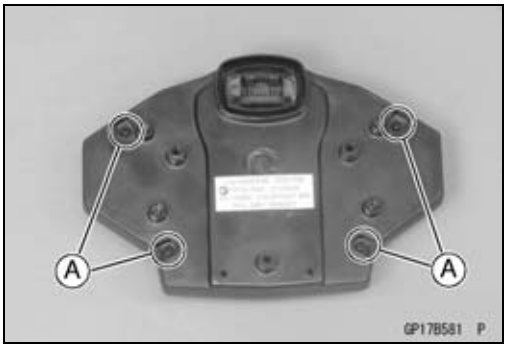

- Remove:
  Screws [A] and Washers
  Screws [B]
- Separate the meter assembly [C] and lower meter case.

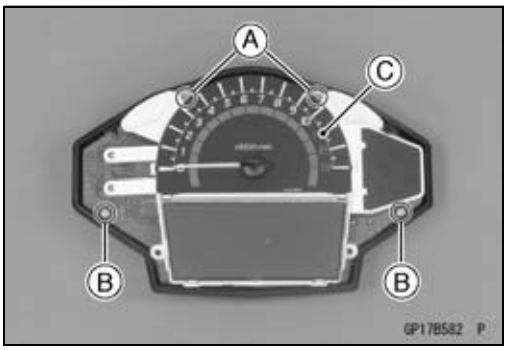

Meter Unit Inspection

- Remove the meter unit (see Meter Unit Removal).
  [1] Green Left Turn Signal Indicator Light (LED)
  [2] Green Right Turn Signal Indicator Light (LED)
  [3] Green Neutral Indicator Light (LED) (–)
  [4] Blue High Beam Indicator Light (LED) (+)
  [5] Red Oil Pressure Warning Indicator Light (LED)
  [6] Battery (+)
  [7] Unused
  [8] Ignition (+)
  [9] Yellow ABS Indicator Light (LED) (EX650F Model)
  [10] Fuel Level Gauge
  [11] Unused
  [12] Tachometer Signal
  [13] Unused
  [14] Speed Sensor Signal
  [15] Ground (–)
  [16] Yellow Engine Warning Indicator Light (LED)

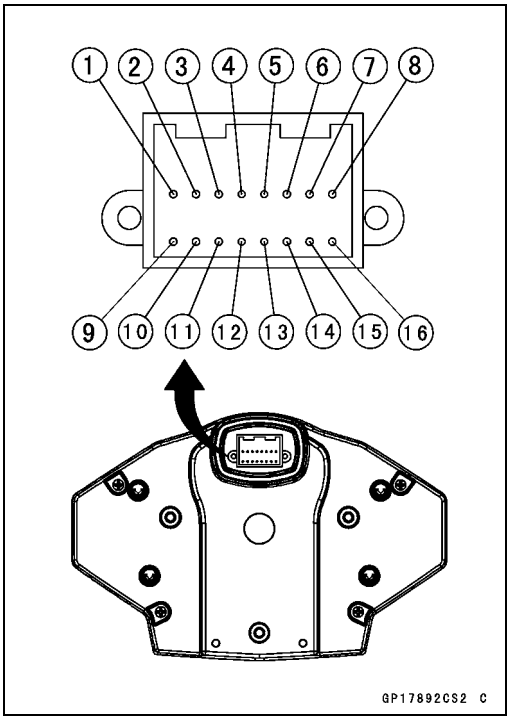

NOTICE

Do not drop the meter unit. Place the meter unit so that it faces upward. If the meter unit is left upside down or sideways for a long time or dropped, it will malfunction. Do not short each terminals.

Liquid Crystal Display (LCD) Segment Check

- Using the auxiliary leads, connect the 12 V battery to the meter unit connector as follows.
  Battery Positive (+) Terminal to Terminal [6]
  Battery Negative (–) Terminal to Terminal [15]

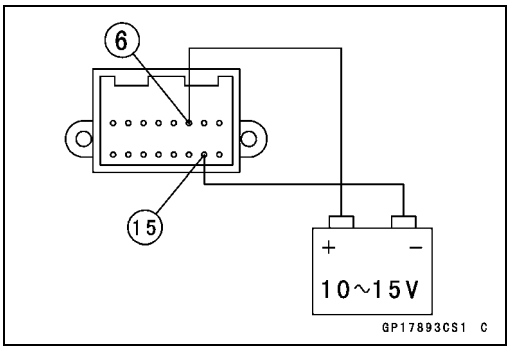

- Connect the terminal [8] to the terminal [6].

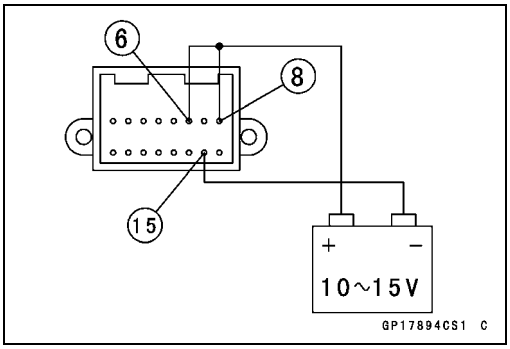

Meter, Gauge, Indicator Unit

○Then the tachometer needle [A] sweeps to the maximum reading, then sweeps back to the minimum reading.
○The following should appear.
Red Oil Pressure Warning Indicator Light (LED) [B]
Yellow ABS Indicator Light (LED) [C] (EX650F Model)
LCD Segments [D]
LED Illumination Light [E]
○The following should appear for 2 seconds.
Yellow Engine Warning Indicator Light (LED) [F]
Red Low Battery Voltage Warning Indicator Light (LED) [G]
Red Water Temperature Warning Indicator Light (LED) [H]
Blue High Beam Indicator Light (LED) [I]
★If the multifunction meter does not work as above, replace the meter assembly.
● Disconnect the terminal [8].
○The LED illumination light, LCD segments and all the warning indicator lights should disappear.
★If the multifunction meter does not work as above, replace the meter assembly.

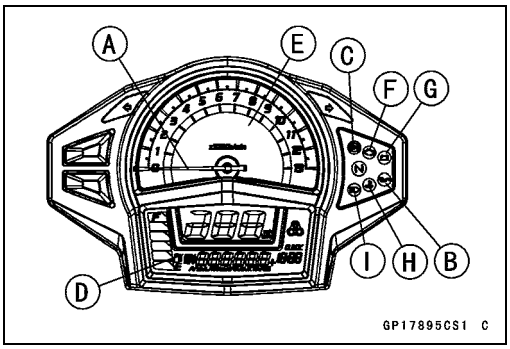

Upper and Lower Button Operation Check

● Connect the 12 V battery and terminals in the same manner as specified in the “Liquid Crystal Display (LCD) Segments Check”.
● Check that the multifunction meter displays shift as shown when the upper button [A] is pressed.
★If the multifunction meter display function does not work, replace the meter assembly.

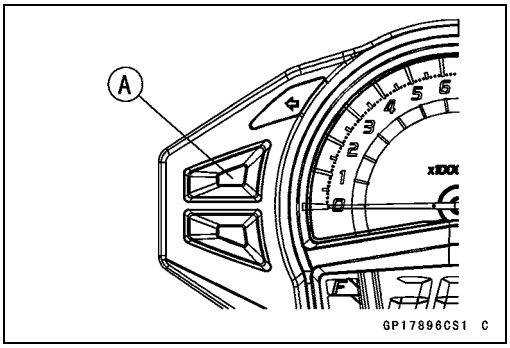

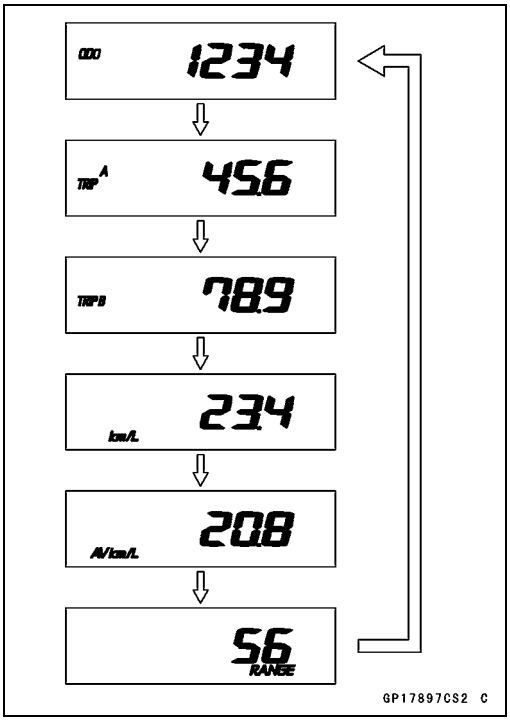

- Display the odometer.
- Check that when the lower button [A] is pressed for more than 2 seconds in ODO mode, the multifunction meter display turns to the clock set mode.

○Both the hour and minute display start blinking.

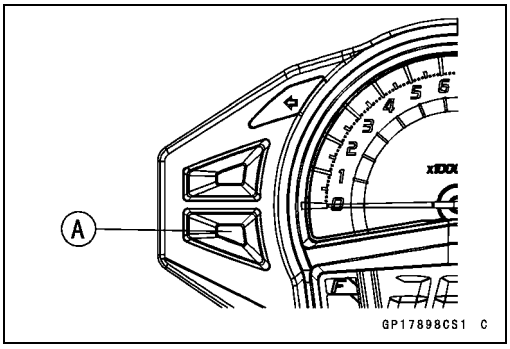

- In the HOUR/MINUTE setting mode, press the lower button again to effect the HOUR setting mode.

○The hour display blinks on the display.

- Press the upper button to set the hour.

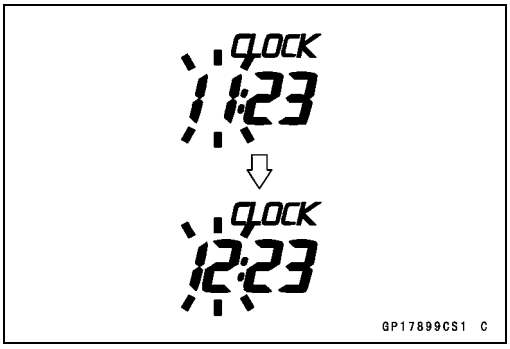

- In the HOUR setting mode, press the lower button to effect the MINUTE setting mode.

○The minute display blinks on the display.

- Press the upper button to set the minute.

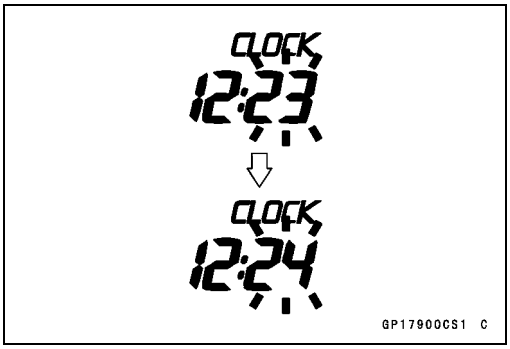

- In the MINUTE setting mode, press the lower button to return the HOUR/MINUTE setting mode.
- Press the upper button to complete the clock setting process.

○The clock starts counting the seconds as soon as the upper button is pressed.

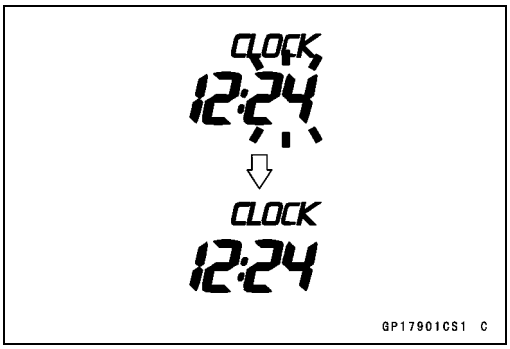

Meter, Gauge, Indicator Unit

- Display the odometer.
- Check that the multifunction meter displays shift as shown by pressing the lower button while the upper button pressed in.

NOTE

○*Km/h, mph display can alternate between English and metric modes (mile and km) in the digital meter. Make sure that km/h or mph according to local regulations is correctly displayed before riding.*

★If the multifunction meter display function does not work, replace the meter assembly.

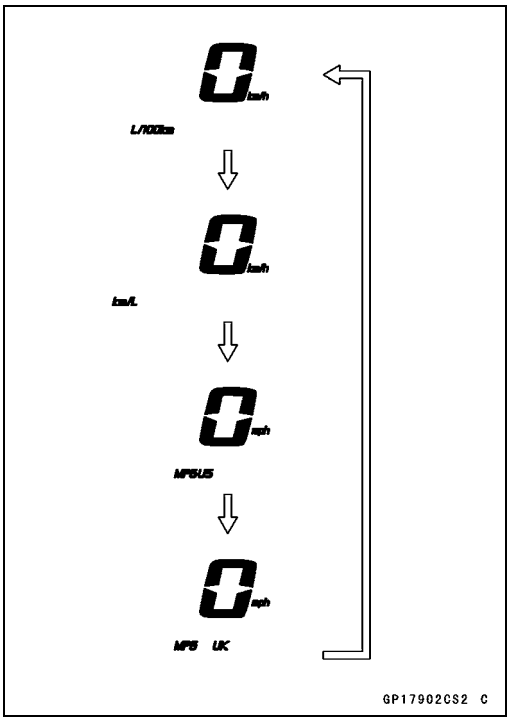

Speedometer Check

- Connect the 12 V battery and terminals in the same manner as specified in the “Liquid Crystal Display (LCD) Segments Check”.
- The speed equivalent to the input frequency is indicated in the oscillator [A], if the square wave (illustrated as shown) would be input into the terminal [14].

○Indicates approximately 60 mph in case the input frequency would be approximately 169.6 Hz.
○Indicates approximately 60 km/h in case the input frequency would be approximately 106 Hz.
★If the oscillator is not available, the speedometer can be checked as follows.
○Install the meter unit (see Meter Unit Installation).
○Raise the rear wheel off the ground using the stand (see Rear Wheel Removal in the Wheels/Tires chapter).
○Turn the ignition switch to ON.
○Rotate the rear wheel by hand.
○Check that the speedometer shows the speed.
★If the speedometer does not work, replace the meter assembly.

NOTE

○*The input frequency of the oscillator adds the integrated value of the odometer.*
○*The integrated value of the odometer cannot be reset.*

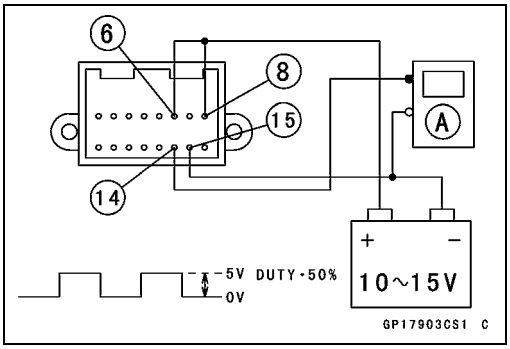

Meter, Gauge, Indicator Unit

Odometer Check

- Check the odometer with the speedometer in the same way.

★If the value indicated in the odometer is not added, replace the meter assembly.

NOTE

○*The integrated value of the odometer cannot be reset.*
○*When the figures come to 999999, they are stopped and locked.*

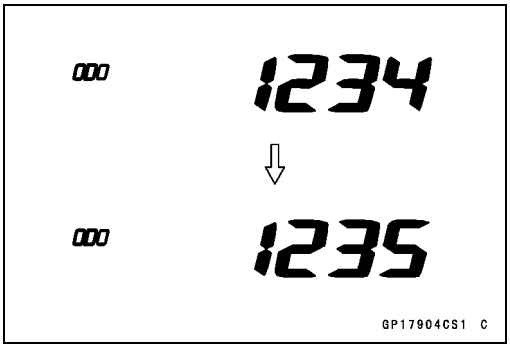

Trip Meter A/B Check

- Check the trip meter A/B with the speedometer in the same way.

★If the value indicated in the trip meter A/B is not added, replace the meter assembly.

- Check that the figure display turns to 0.0 when the lower button is pressed for more than 2 seconds.

★If the figure displayed in the trip meter A/B does not indicate 0.0, replace the meter assembly.

NOTE

○*The integrated value of the odometer cannot be reset.*

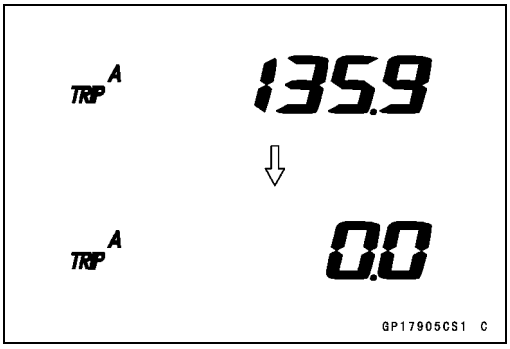

Tachometer Check

- Connect the 12 V battery and terminals in the same manner as specified in the “Liquid Crystal Display (LCD) Segments Check”.
- The revolutions per minute (rpm) equivalent to the input frequency is indicated in the oscillator [A] if the square wave (illustrated as shown) would be input into the terminal [12].

○Indicates approximately 4 000 rpm in case the input frequency would be approximately 133.3 Hz.

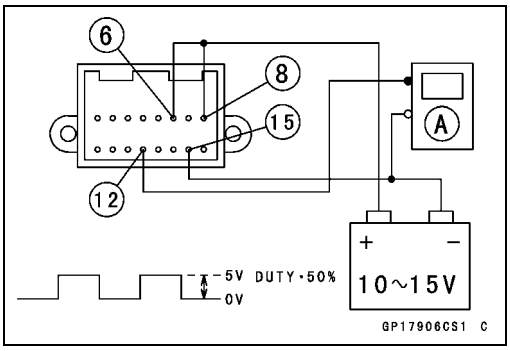

★If the oscillator is not available, the tachometer can be checked as follows.

○Connect the 12 V battery and terminals in the same manner as specified in the “Liquid Crystal Display (LCD) Segments Check”.

○Then the tachometer needle [A] sweeps to the maximum reading [B], then sweeps back to the minimum reading [C].

★If the tachometer needle does not sweep, replace the meter assembly.

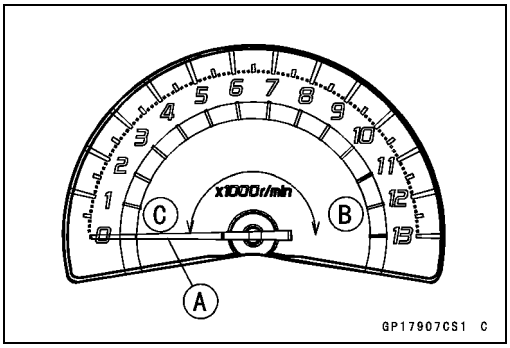

○Using the insulated auxiliary lead, quickly open and connect the terminal [8] to the terminal [12] repeatedly.

○Then the tachometer needle sweeps to the maximum reading, then sweeps back to the minimum reading.

★If the tachometer needle does not sweep, replace the meter assembly.

Meter, Gauge, Indicator Unit

Fuel Level Gauge Check

- Connect the 12 V battery and terminals in the same manner as specified in the “Liquid Crystal Display (LCD) Segments Check”.
- Connect the variable rheostat [A] to the terminal [10].

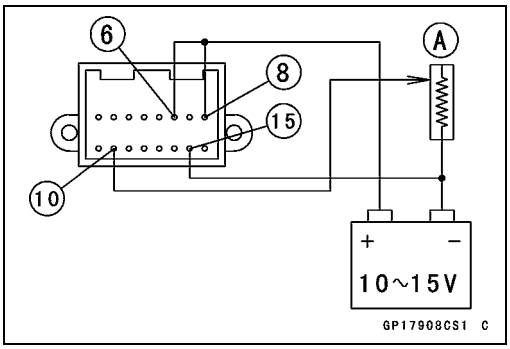

- Check that the number of segments [A] matches the resistance value of the variable rheostat.

Variable Rheostat Resistance (Ω)	Display Segments
20	6
110	3
190	1

★If the multifunction meter display function does not work, replace the meter assembly.

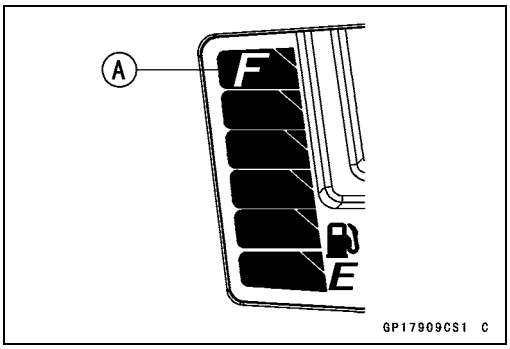

Fuel Level Warning Check

- Connect the 12 V battery and terminals in the same manner as specified in the “Liquid Crystal Display (LCD) Segments Check”.
- Connect the variable rheostat [A] to the terminal [10].
- Adjust the resistance value to the approximately 220 Ω.

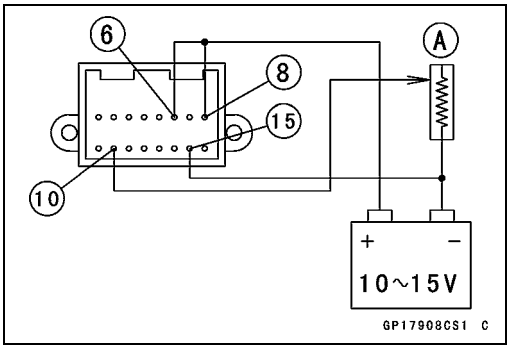

- Check that one segment [A] in the fuel gauge starts blinking.
- Check that the fuel warning symbol [B] blinks.

★If the multifunction meter display function does not work, replace the meter assembly.

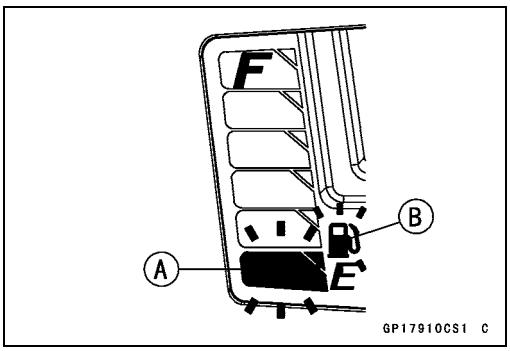

Indicator Lights Inspection

- Connect the 12 V battery and terminals in the same manner as specified in the “Liquid Crystal Display (LCD) Segments Check”.
- Check that the following lights go on.
  Yellow ABS Indicator Light (LED) [A] (EX650F Model only)
  Yellow Engine Warning Indicator Light (LED) [B]
  Green Left Turn Signal Indicator Light (LED) [C]
  Green Right Turn Signal Indicator Light (LED) [D]
  Green Neutral Indicator Light (LED) [E]
  Blue High Beam Indicator Light (LED) [F]
  Red Oil Pressure Warning Indicator Light (LED) [G]

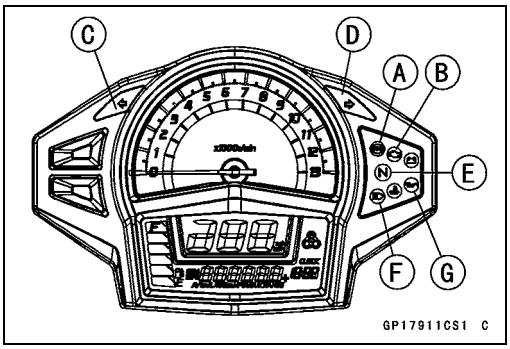

Meter, Gauge, Indicator Unit

- Using the auxiliary leads, connect a 12 V battery to the meter unit connector as follows.

Yellow ABS Indicator Light (LED) (EX650F Model only)
Battery Negative (–) Terminal to Terminal [9]

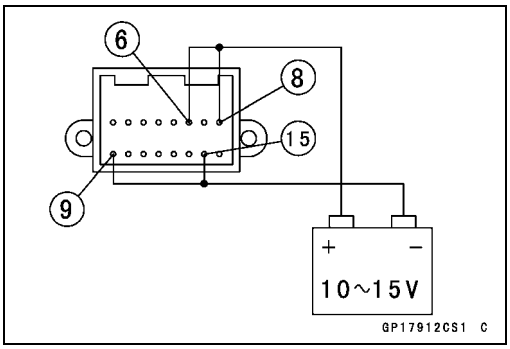

Yellow Engine Warning Indicator Light (LED)
Battery Negative (–) Terminal to Terminal [16]

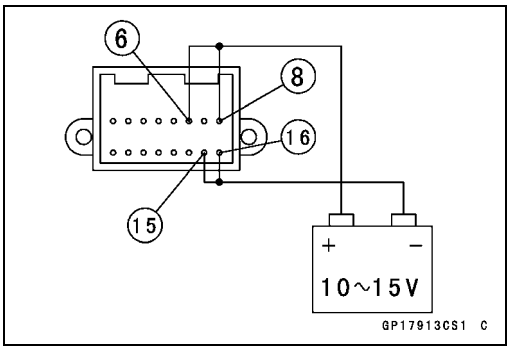

Red Oil Pressure Warning Indicator Light (LED)
Battery Negative (–) Terminal to Terminal [5]

NOTE

○*The red oil pressure warning indicator light (LED) should go on after about 3 seconds from connecting the terminals.*

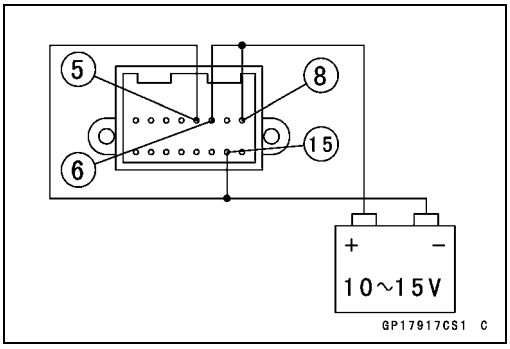

Green Left and Right Turn Signal Indicator Light (LED)
For Green Left Turn Signal Indicator Light (LED)
Battery Positive (+) Terminal to Terminal [1]

For Green Right Turn Signal Indicator Light (LED)
Battery Positive (+) Terminal to Terminal [2]

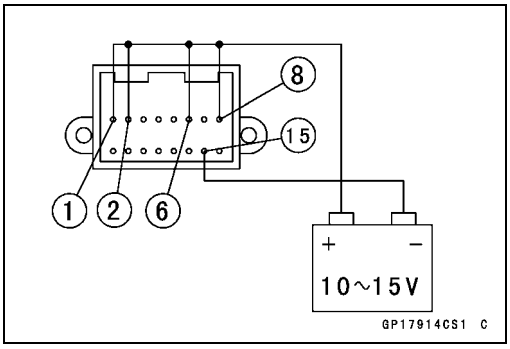

Meter, Gauge, Indicator Unit

Green Neutral Indicator Light (LED)

Battery Negative (–) Terminal to Terminal [3]

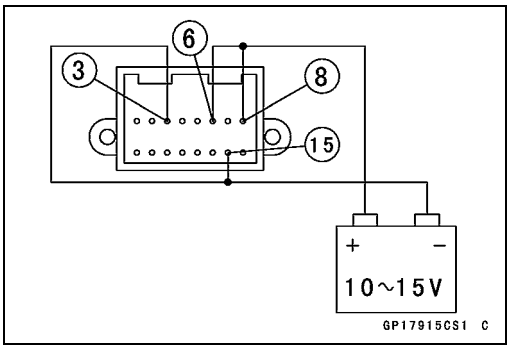

Blue High Beam Indicator Light (LED)

Battery Positive (+) Terminal to Terminal [4]

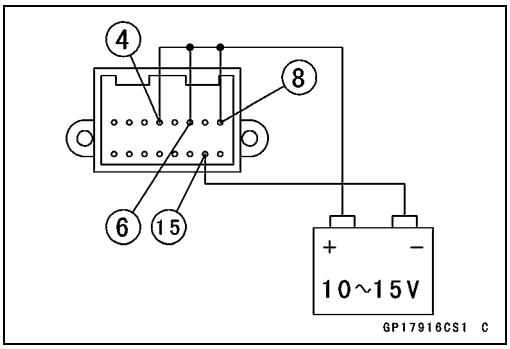

★If each light (LED) does not go on, replace the meter assembly.

Meter, Gauge, Indicator Unit

Meter Circuit

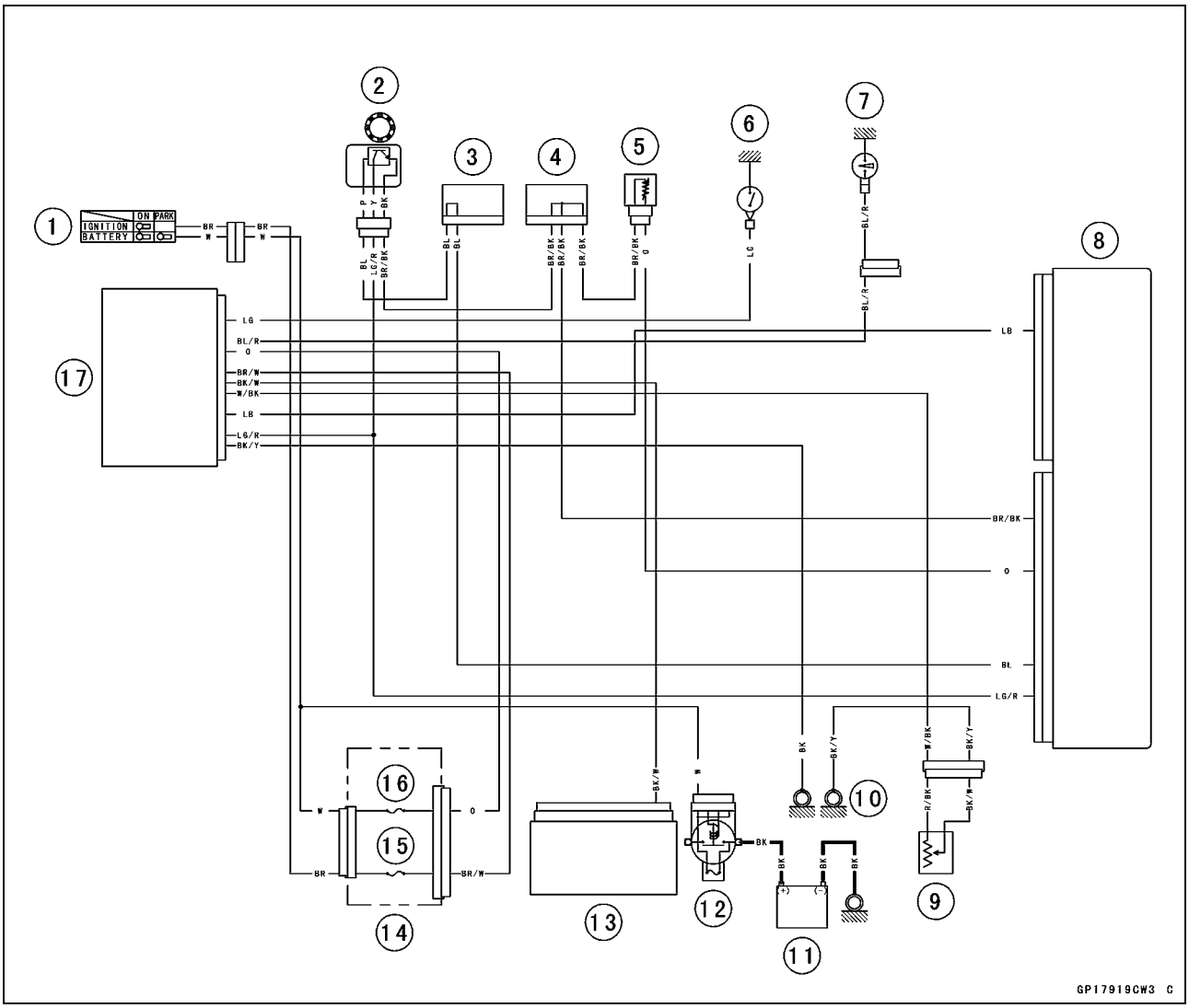

1. Ignition Switch
2. Speed Sensor
3. Joint Connector C
4. Joint Connector D
5. Water Temperature Sensor
6. Neutral Switch
7. Oil Pressure Switch
8. ECU
9. Fuel Level Gauge
10. Frame Ground
11. Battery 12 V 10 Ah
12. Main Fuse 30 A
13. ABS Hydraulic Unit (ABS Equipped Models)
14. Fuse Box
15. Ignition Fuse 10 A
16. Meter Fuse 10 A
17. Meter Unit

Switches and Sensors

Brake Light Timing Inspection

- Refer to the Brake Light Switch Operation Inspection in the Periodic Maintenance chapter.

Brake Light Timing Adjustment

- Refer to the Brake Light Switch Operation Inspection in the Periodic Maintenance chapter.

Switch Inspection

- Using a hand tester, check to see that only the connections shown in the table have continuity (about zero ohms).

Special Tool - Hand Tester: 57001-1394

○For the switch housings and the ignition switch, refer to the tables in the Wiring Diagram.

★If the switch has an open or short, repair it or replace it with a new one.

Rear Brake Light Switch Connections

Rear Brake Light Switch Connections		
Color	BR	BL
When brake pedal is pushed down	○	○
When brake pedal is released		

Sidestand Switch Connections

Sidestand Switch Connections		
Color	BK	G
When sidestand is down		
When sidestand is up	○	○

Neutral Switch Connections

Neutral Switch Connections		
Color	SW. Terminal	Ground
When transmission is in neutral	○	○
When transmission is not in neutral		

Oil Pressure Switch Connections*

Oil Pressure Switch Connections *		
Color	SW. Terminal	Ground
When engine is stopped	○	○
When engine is running		

*: When the engine lubrication system is in good condition.

Water Temperature Sensor Inspection

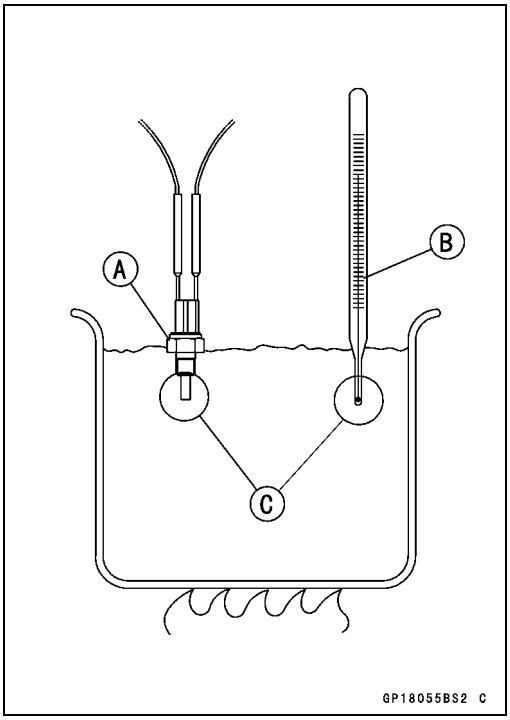

- Remove the water temperature sensor (see Water Temperature Sensor Removal/Installation in the Fuel System (DFI) chapter).
- Suspend the sensor [A] in a container of coolant so that the temperature-sensing projection [C] is submerged.
- Suspend an accurate thermometer [B] with temperature -sensing projection [C] located in almost the same depth with the sensor.

NOTE

○*The sensor and thermometer must not touch the container side or bottom.*

- Place the container over a source of heat and gradually raise the temperature of the coolant while stirring the coolant gently.
- Using the hand tester, measure the internal resistance of the sensor.

Special Tool - Hand Tester: 57001-1394

★If the hand tester does not show the specified values, replace the sensor.

Water Temperature Sensor Resistance

Temperature	Resistance (kΩ)
–20°C (–4°F)	*18.80 ±2.37
0°C (32°F)	*(about 6.544)
40°C (104°F)	1.136 ±0.095
100°C (212°F)	0.1553 ±0.0070

*: Reference Information

Speed Sensor Removal

NOTICE

Never drop the sensor especially on a hard surface. Such a shock to the sensor can damage it.

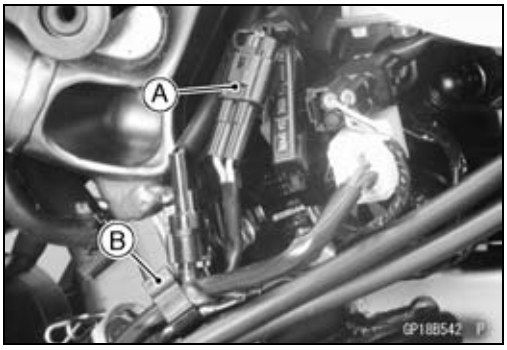

- Remove the engine sprocket cover (see Engine Sprocket Removal in the Final Drive chapter).
- Disconnect the speed sensor lead connector [A].
- Open the clamp [B].

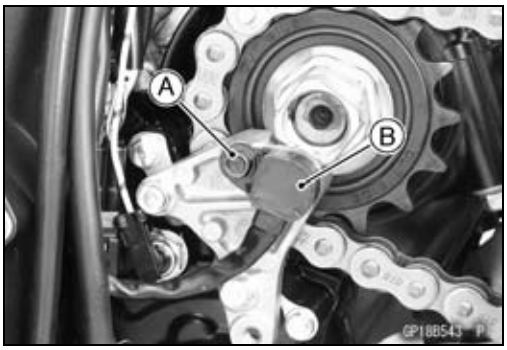

- Remove:
  Bolt [A]
  Speed Sensor [B]

Speed Sensor Installation

- Installation is the reverse of removal.

○Apply a non-permanent locking agent to the sensor bolt, and tighten it.

Torque - Speed Sensor Bolt: 6.0 N·m (0.61 kgf·m, 53 in·lb)

Switches and Sensors

Speed Sensor Inspection

- Remove the speed sensor (see Speed Sensor Removal).
- Connect the speed sensor connector [A] with the battery [B], 10 kΩ resistor [C] and hand tester [D] as shown.
- Set the tester to the DC 25 V range.

Special Tool - Hand Tester: 57001-1394

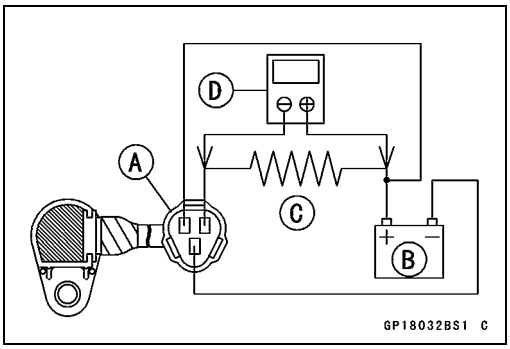

- Trace [A] each side of the speed sensor surface with the screw driver.

○Then the tester indicator should flick [B].

★If the tester indicator does not flick, replace the speed sensor.

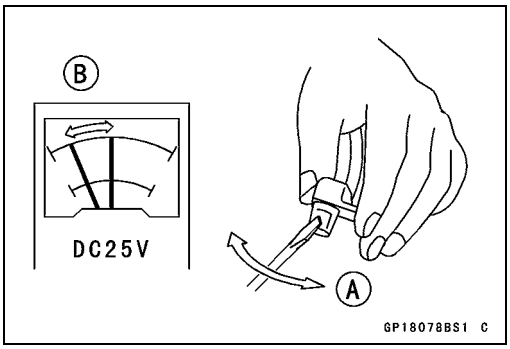

Fuel Level Sensor Inspection

- Remove:
  Fuel Tank (see Fuel Tank Removal in the Fuel System (DFI) chapter)
  Fuel Pump (see Fuel Pump Removal in the Fuel System (DFI) chapter)
- Check that the float moves up and down smoothly without binding. It should go down under its own weight.
  Float in Full Position [A]
  Float in Empty Position [B]
  Top [C]
  Front [D]

★If the float does not move smoothly, replace the fuel pump.

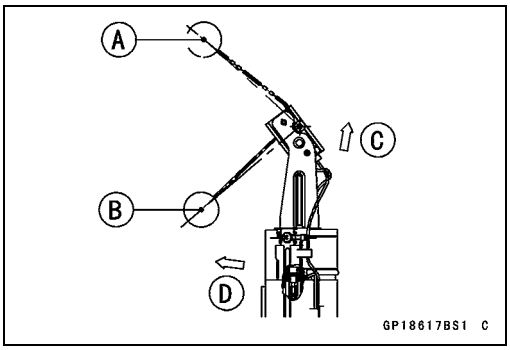

- Using the hand tester [A], measure the resistance across the terminals in the fuel level sensor lead connector [B].

Special Tools - Hand Tester: 57001-1394

Fuel Level Sensor Resistance
Standard: Full position: 9.6 ~ 12.4 Ω
Empty position: 222 ~ 228 Ω

★If the tester readings are not as specified, or do not change smoothly according as the float moves up and down, replace the sensor.

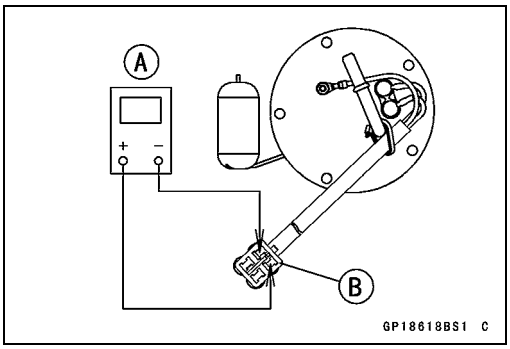

- Install the removed parts (see appropriate chapters).

Oxygen Sensor Removal (Equipped Models)

NOTICE

Never drop the sensor especially on a hard surface. Such a shock to the sensor can damage it.

NOTICE

Do not pull strongly, twist, or bend the oxygen sensor lead. This may cause the wiring open.

- Remove:
  Left Middle Fairing (see Middle Fairing Removal in the Frame chapter)
  Engine Sprocket Cover (see Engine Sprocket Removal in the Final Drive chapter)
  Connector [A] (Disconnect)
  Oxygen Sensor [B]
- Clear the lead from the clamp [C].

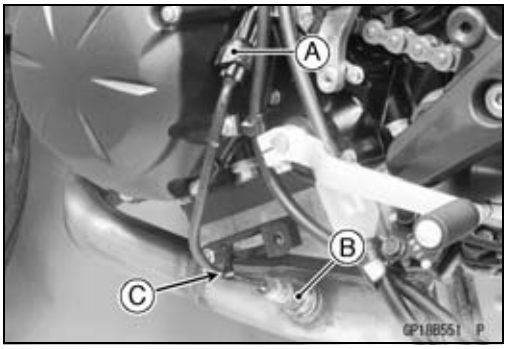

Oxygen Sensor Installation (Equipped Models)

NOTICE

Never drop the oxygen sensor [A], especially on a hard surface. Such a shock to the unit can damage it. Do not touch the sensing part [B] and filter holes [C] of the sensor to prevent oil contact. Oil contamination from hands can reduce sensor performance.

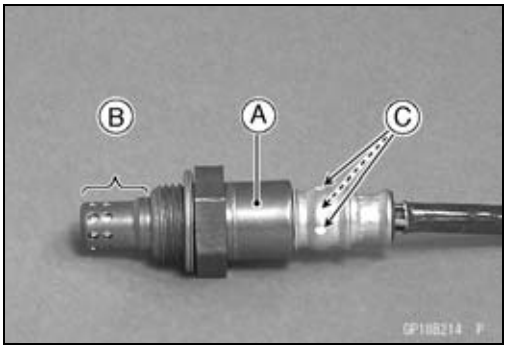

- Tighten:

  Torque - Oxygen Sensor: 44 N·m (4.5 kgf·m, 32 ft·lb)
- Run the oxygen sensor lead correctly (see Cable, Wire, and Hose Routing section in the Appendix chapter).
- Install the left middle fairing (see Middle Fairing Installation in the Frame chapter).

Oxygen Sensor Inspection (Equipped Models)

- Refer to the Oxygen Sensor Inspection in the Fuel System (DFI) chapter.

Relay Box

NOTE

○*The relay box [A] has relays and diodes. The relays and diodes can not be removed.*

Relay Box Removal

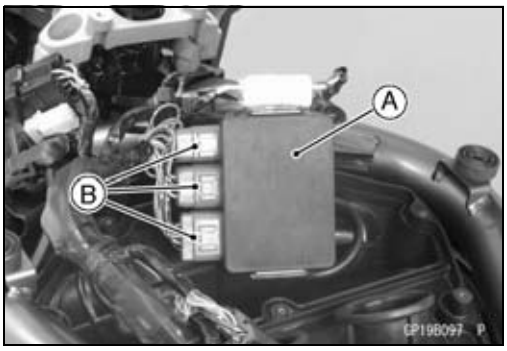

- Remove:
  Fuel Tank (see Fuel Tank Removal in the Fuel System (DFI) chapter)
  Air Cleaner Element (see Air Cleaner Element Replacement in the Periodic Maintenance chapter)
- Take out the relay box [A] from the bracket.
- Disconnect the connectors [B].

Relay Box Installation

- Installation is the reverse of removal.

○Run the lead correctly (see Cable, Wire, and Hose Routing section in the Appendix chapter).

Relay Circuit Inspection

- Remove the relay box (see Relay Box Removal).
- Check the conductivity of the following numbered terminals by connecting the hand tester and one 12 V battery to the relay box as shown (see Relay Box Internal Circuit in this section).

Relay Circuit Inspection (with the battery disconnected)

	Tester Connection	Tester Reading (Ω)
Headlight Circuit Relay	1-3	∞
ECU Main Relay	7-6	∞
	4-5	Not ∞*
Fuel Pump Relay	7-8	∞
	9-10	Not ∞*
Starter Circuit Relay	11-16	∞
	11-12	∞
Fan Relay	17-20	∞
	18-19	Not ∞*

*: The actual reading varies with the hand tester used.

Relay Box

Relay Circuit Inspection (with the battery connected)

	Battery Connection (+) (–)	Tester Connection	Tester Reading (Ω)
ECU Main Relay	2-11	1-3	0
	4-5	7-6	0
Fuel Pump Relay	9-10	7-8	0
Fan Relay	18-19	17-20	0

	Battery Connection (+) (–)	Tester Connection DC 25 V Range	Tester Reading (V)
Starter Circuit Relay	16-12	11-12	Battery Voltage

(+): Apply positive lead.
(–): Apply negative lead.

★If the tester does not read as specified, replace the relay box.
● Install the relay box (see Relay Box Installation).

Diode Circuit Inspection

● Remove the relay box (see Relay Box Removal).
● Check the conductivity of the following pairs of terminals (see Relay Box Internal Circuit in this section).

Diode Circuit Inspection

Tester Connection	1-11, 2-11, 12-13, 12-15, 12-16, 13-14, 13-15

★The resistance should be low in one direction and more than ten times as much in the other direction. If any diode shows low or high in both directions, the diode is defective and the relay box must be replaced.

NOTE

○*The actual meter reading varies with the meter or tester used and the individual diodes, but generally speaking, the lower reading should be from zero to one half the scale.*

● Install the relay box (see Relay Box Installation).

Relay Box

Relay Box Internal Circuit

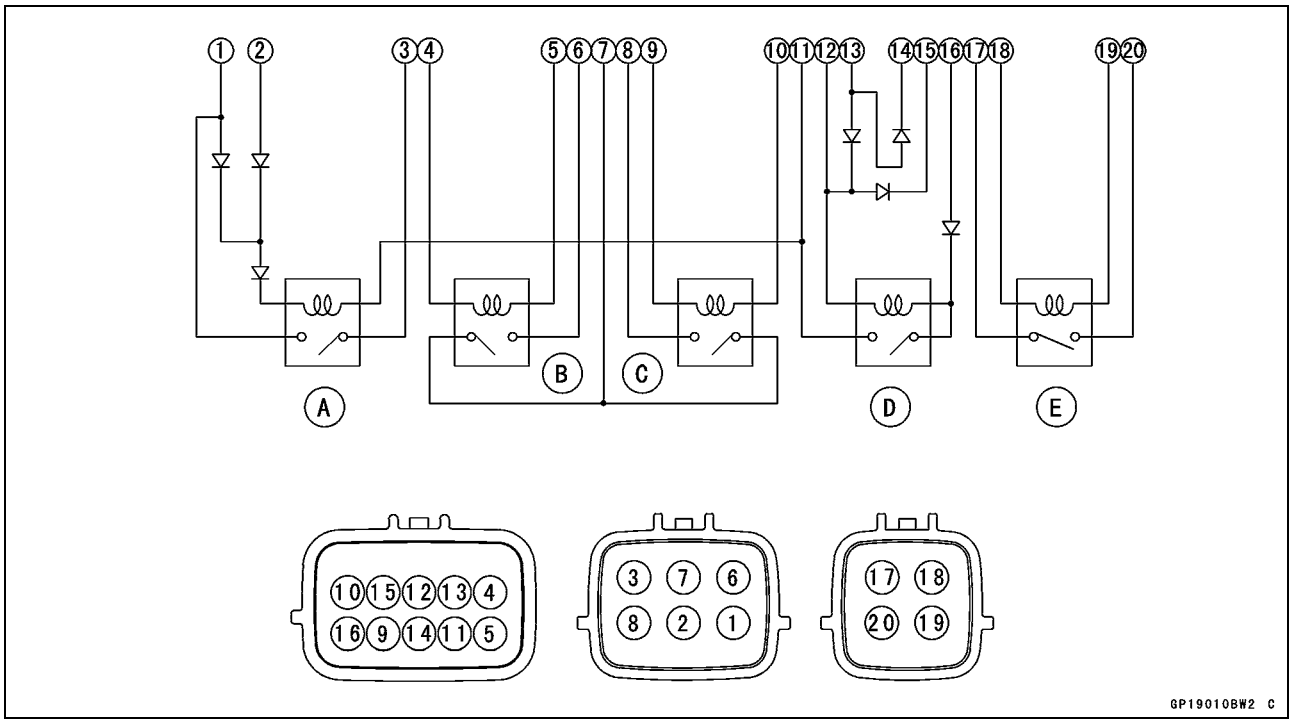

A: Headlight Circuit Relay
B: ECU Main Relay
C: Fuel Pump Relay
D: Starter Circuit Relay
E: Radiator Fan Relay

Fuse

30 A Main Fuse Removal

- Remove the starter relay (see Starter Relay Inspection).
- Slide out the cap [A].
- Open the cover [B], and pull out the main fuse [C] straight out of the fuse box with needle nose pliers.

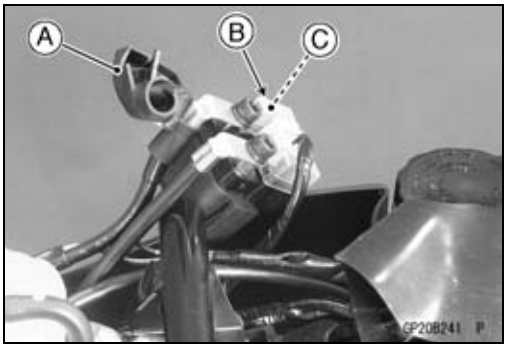

Fuse Box Fuse Removal

- Remove the fuel tank (see Fuel Tank Removal in the Fuel System (DFI) chapter).
- Open the lids [A].

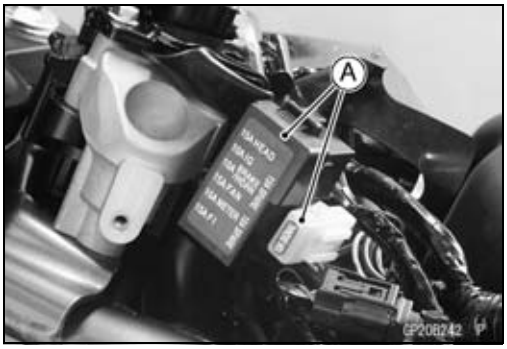

- Pull out the fuses [A] straight out of the fuse box with needle nose pliers.

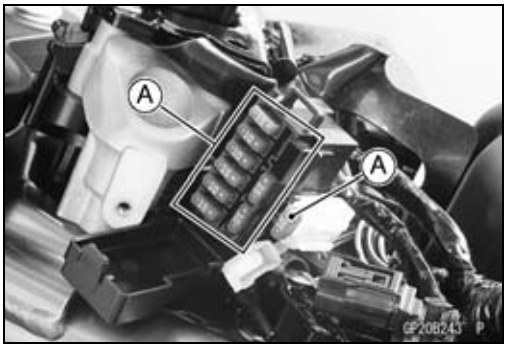

Fuse Installation

- If a fuse fails during operation, inspect the electrical system to determine the cause, and then replace it with a new fuse of proper amperage.
- Install the fuse box fuses on the original position as specified on the lid.

Fuse Inspection

- Remove the fuse (see 30 A Main Fuse/Fuse Box Fuse Removal).
- Inspect the fuse element.

★If it is blown out, replace the fuse. Before replacing a blown fuse, always check the amperage in the affected circuit. If the amperage is equal to or greater than the fuse rating, check the wiring and related components for a short circuit.

Housing [A]
Fuse Element [B]
Terminals [C]
Blown Element [D]

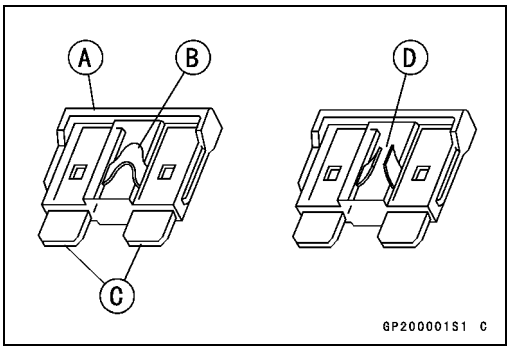

NOTICE

When replacing a fuse, be sure the new fuse matches the specified fuse rating for that circuit. Installation of a fuse with a higher rating may cause damage to wiring and components.

Appendix

Table of Contents

Cable, Wire, and Hose Routing 17-2
Troubleshooting Guide 17-44

Cable, Wire, and Hose Routing

The routing on EX650E/F is shown using the figure of ER650E/F.

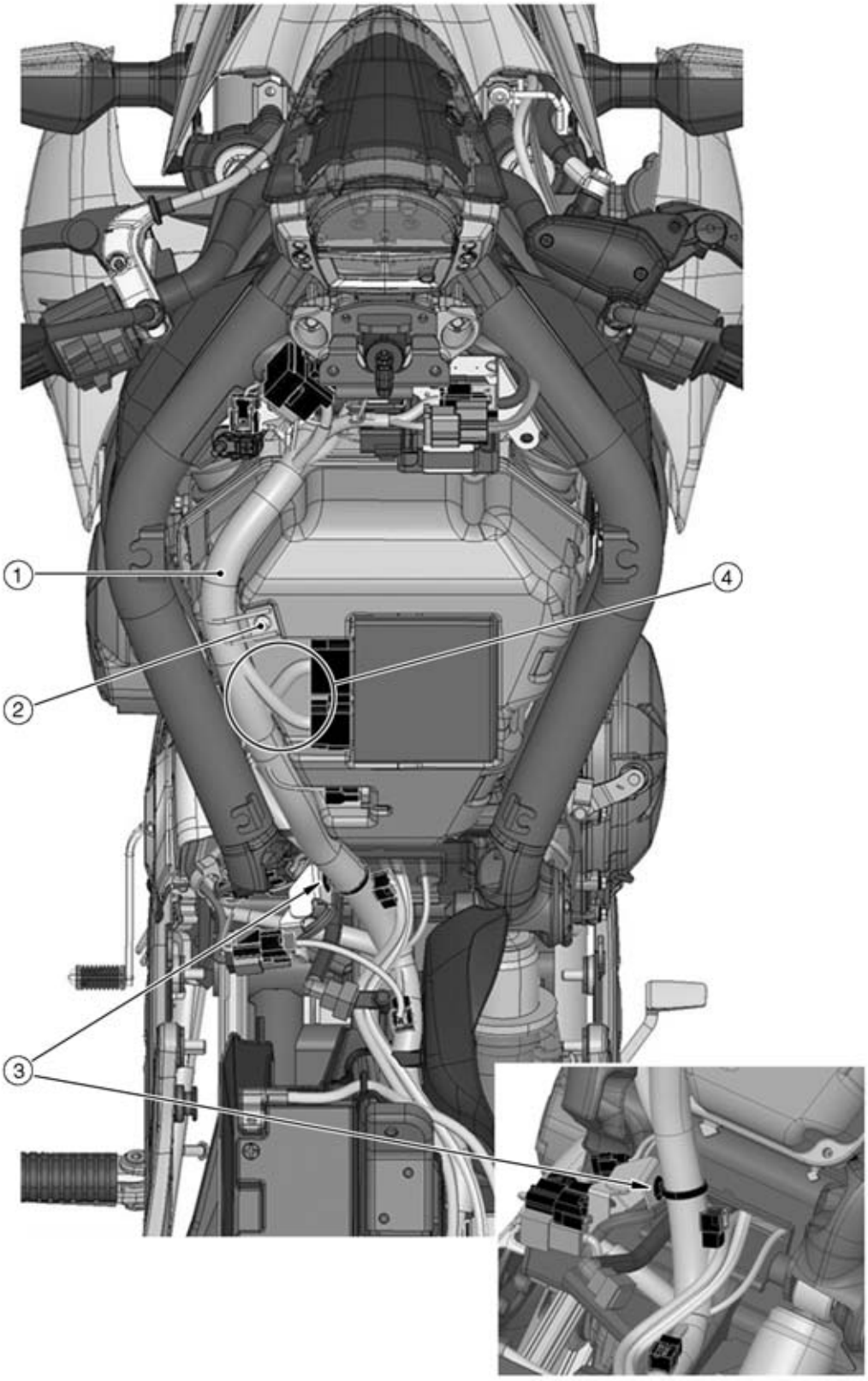

Cable, Wire, and Hose Routing

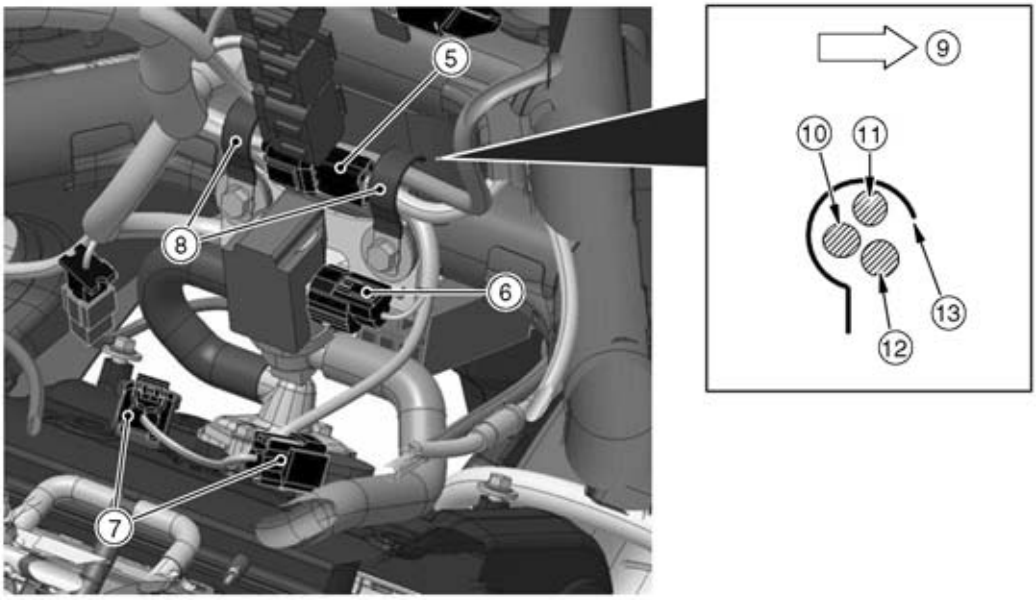

1. Run the main harness inside the ribs on the air cleaner housing cover.
2. Clamp (Hold the main harness.)
3. Fix the clamp to the bracket.
4. Run the rear (smaller) ECU connecter lead above the other one.
5. Right Switch Housing Lead Connector
6. Air Switching Valve Lead Connector
7. Stick Coil Lead Connectors
8. Clamps
9. Front
10. Right Switch Housing Lead
11. Ignition Switch Lead
12. Harness (Air Switching Valve Lead and Ignition Coil Leads)
13. Clamp

Cable, Wire, and Hose Routing

The routing on EX650E/F is shown using the figure of ER650E/F.

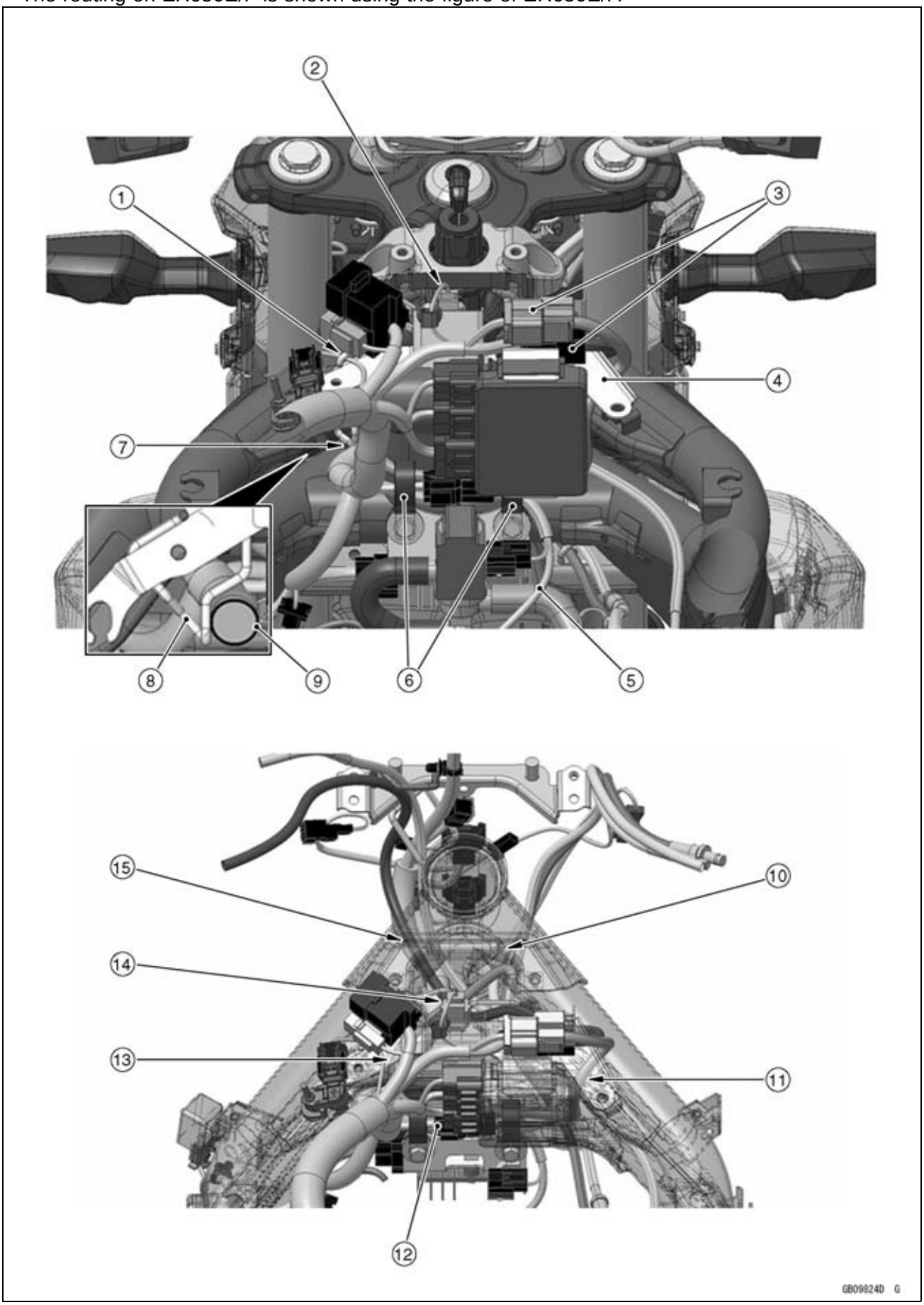

Cable, Wire, and Hose Routing

1. Guide (Hold the intake air pressure sensor lead.)
2. Vehicle-down Sensor Lead
3. Fix the ignition switch lead connector (upper) and the left switch housing lead connector (lower) to the bracket.
4. Bracket
5. Stick Coil Lead
6. Clamps
7. Run the main harness on the right side of the guide.
8. Guide
9. Main Harness
10. Run the right switch housing lead as follows; on the right side of the head pipe, inside the guide, between the upper and lower cross pipes.
11. Run the ignition switch lead between the relay box and the frame, and under the bracket.
12. Right Switch Housing Lead Connector
13. Run the ignition switch lead between the upper and lower cross pipes (left side) and to the lower right of the bracket.
14. Run the ignition switch lead above the left switch housing lead.
15. Run the left switch housing lead as follows; through the clamp on the left side of the bracket, on the left side of the head pipe, inside the guide, in the lower right of the bracket.

Cable, Wire, and Hose Routing

The routing on EX650E/F is shown using the figure of ER650E/F.

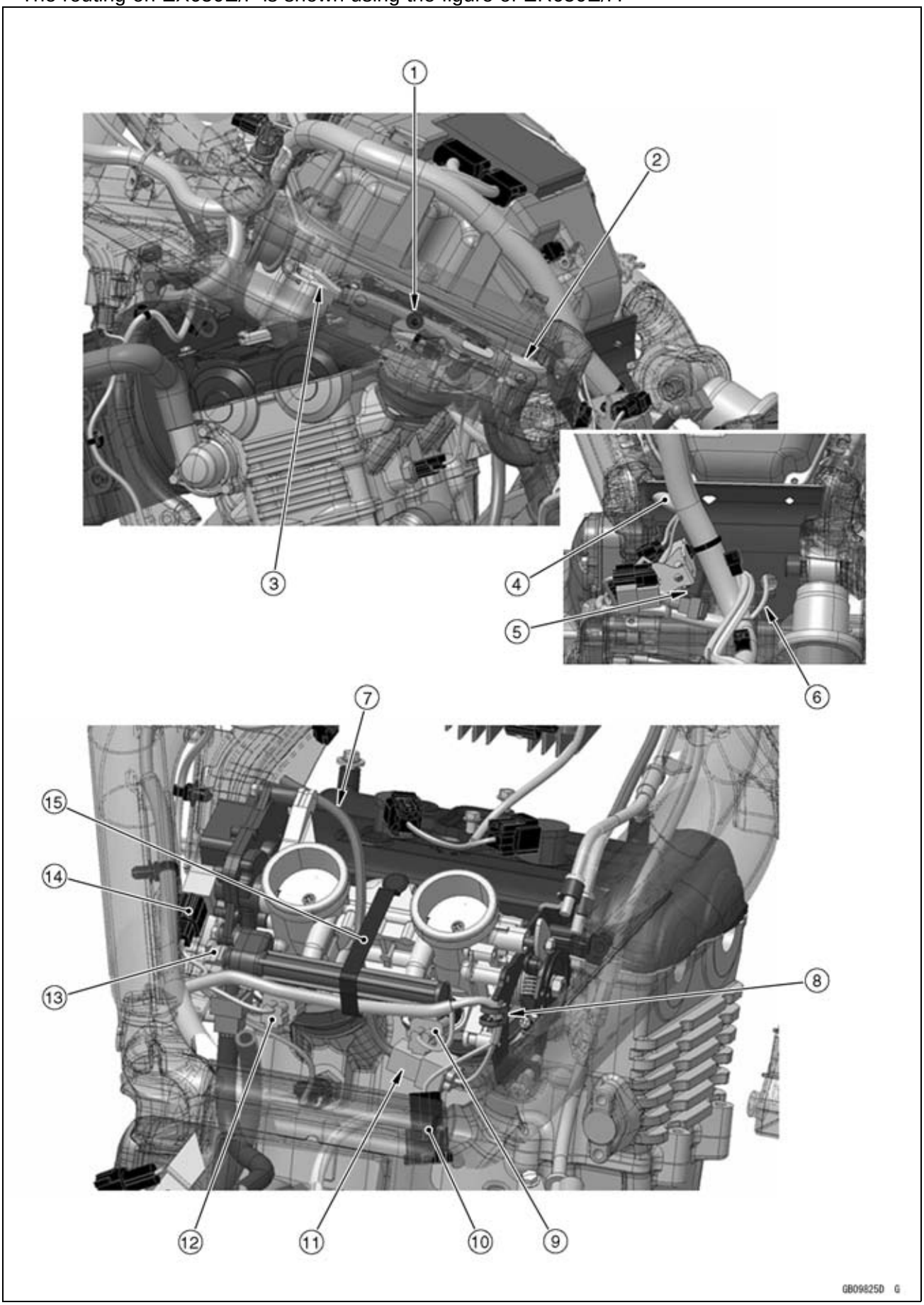

Cable, Wire, and Hose Routing

1. Fix the clamp to the frame gusset.
2. Run the frame ground lead on the left side of the air cleaner housing.
3. Run the frame ground lead terminal to the outside from between the frame gussets, and fix the lead terminal on the gusset.
4. Frame Ground Lead
5. Fuel Pump Lead
6. Rear Brake Light Switch Lead
7. Subthrottle Valve Actuator Lead
8. Clamp
9. Fuel Injector #2
10. Crankshaft Sensor Lead Connector
11. Locate the subthrottle valve actuator lead connector under the fuel injector #2.
12. Fuel Injector #1
13. Main Throttle Sensor Lead Connector
14. Subthrottle Sensor Lead Connector
15. Clamp

Cable, Wire, and Hose Routing

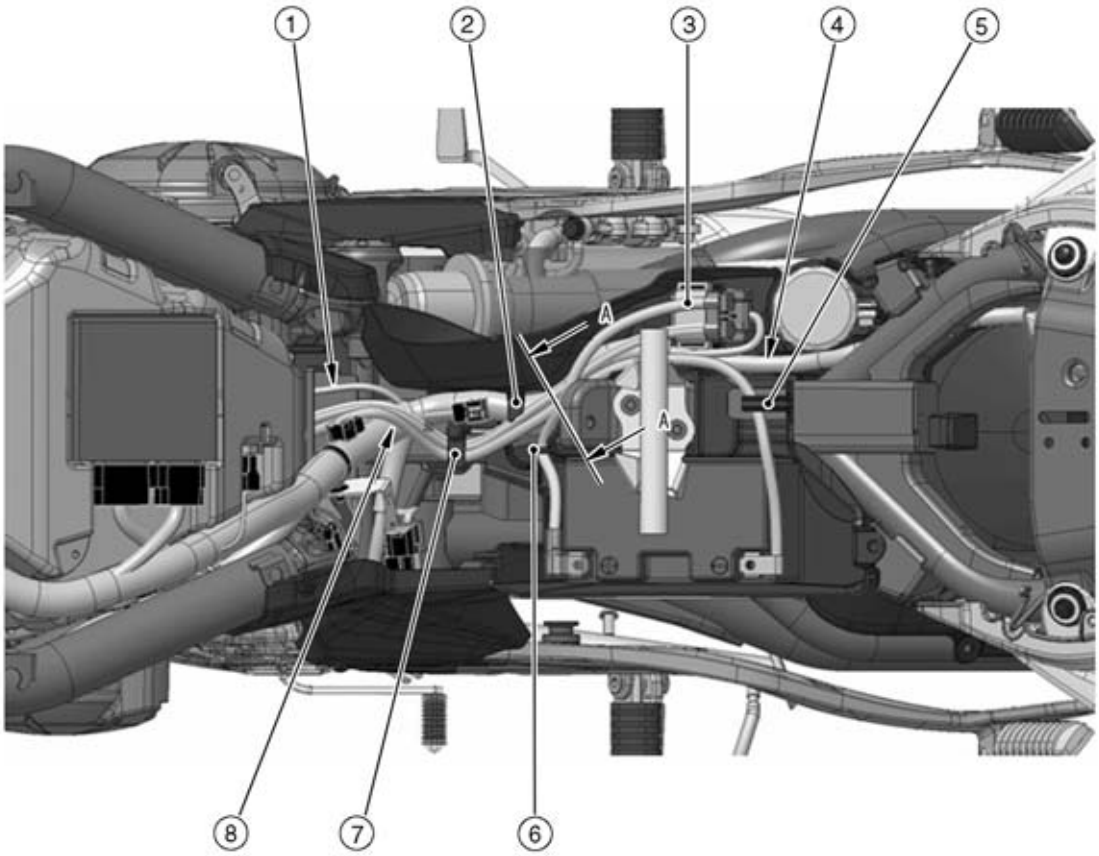

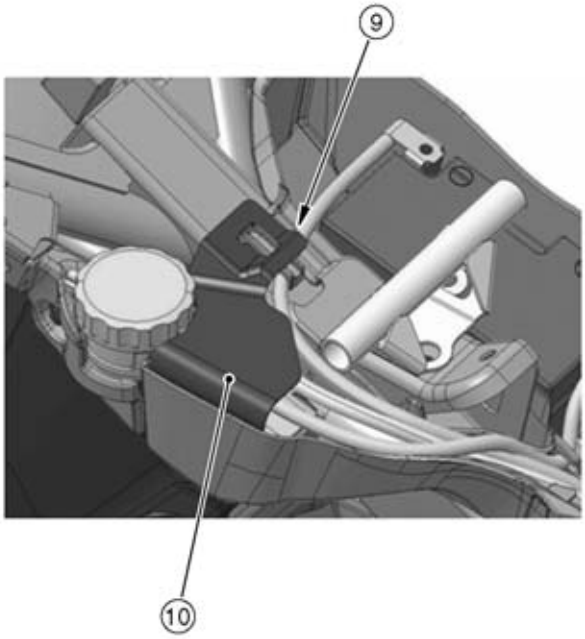

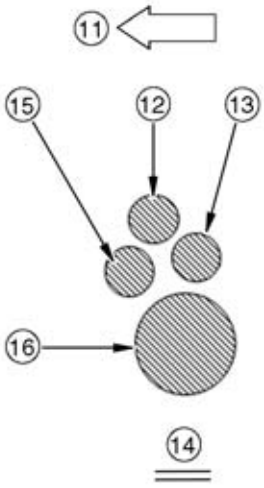

GB09826D G

Cable, Wire, and Hose Routing

1. Run the rear brake light switch lead through the hole on frame.
2. Hook (Hold the main harness.)
3. Fix the starter relay to the ribs on the battery case.
4. Run the tail/brake light lead into the groove on the battery case.
5. Hook (Hold the battery negative (–) cable.)
6. Hook (Hold the battery positive (+) cable.)
7. Hook (Hold the starter relay lead and the battery negative (–) cable.)
8. Run the starter relay lead and the battery negative (–) cable above the main harness.
9. Install the dust cover to the hook as shown.
10. Insert the dust cover between the starter relay and the battery case.
11. Left Side
12. Battery Positive (+) Cable
13. Starter Relay Lead
14. Section A - A
15. Battery Negative (–) Cable
16. Main Harness

Cable, Wire, and Hose Routing

ABS Equipped Models

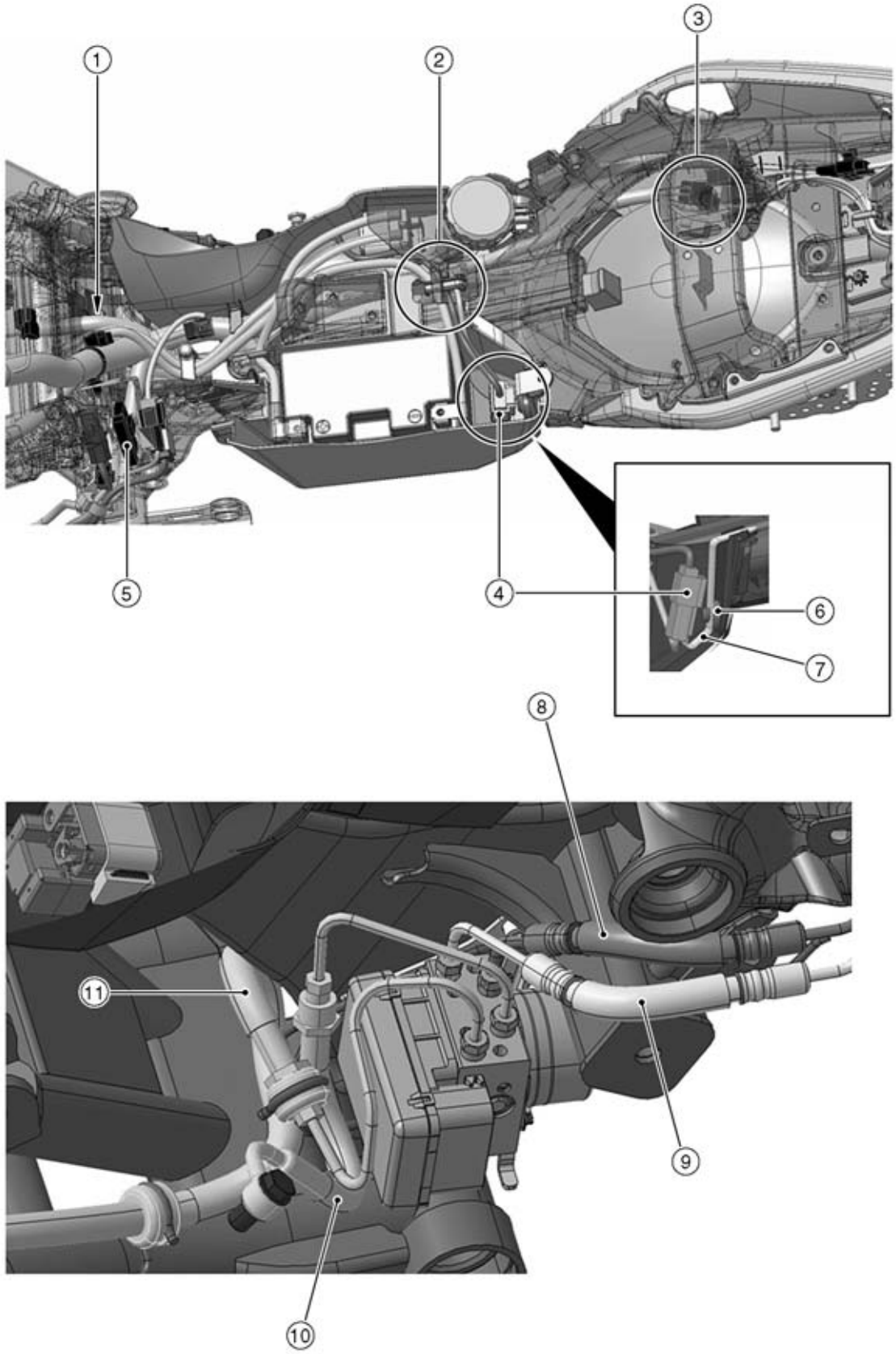

Cable, Wire, and Hose Routing

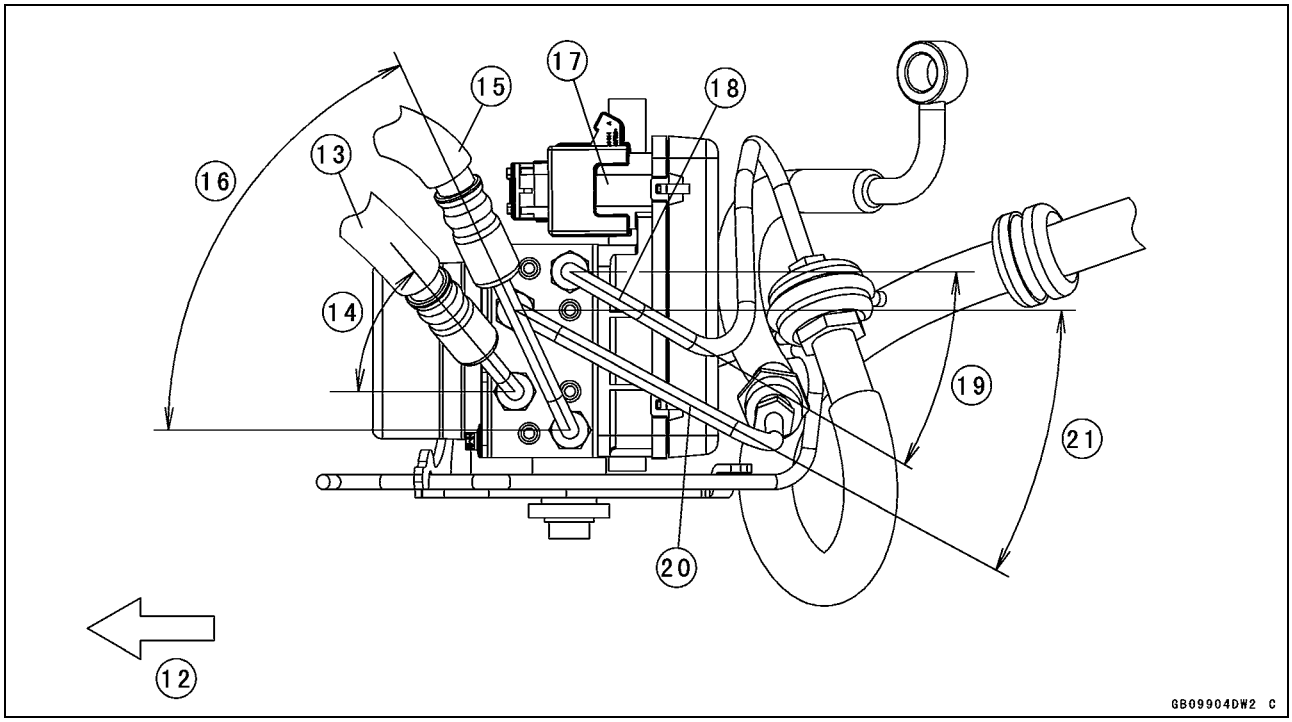

1. Run the ABS hydraulic unit lead through the hole on the frame.
2. From rear to front, run the following under the hook on the battery case; starter relay lead, battery positive (+) cable connector lead, battery negative (–) cable.
3. Locate the ABS Kawasaki diagnostic system connector and ABS self-diagnosis terminal inside the dust cover.
4. Fix the battery positive (+) cable connector to the clamp.
5. Fix the fuse box 3 (for ABS) to the center clamp on the bracket.
6. Damper
7. Clamp
8. Brake Hose (Front Master Cylinder ~ ABS Hydraulic Unit)
9. Brake Hose (ABS Hydraulic Unit ~ Front Calipers)
10. Brake Hose (Rear Master Cylinder ~ ABS Hydraulic Unit)
11. Brake Hose (ABS Hydraulic Unit ~ Rear Caliper)
12. Front
13. Brake Hose (to Front Master Cylinder)
14. About 50°
15. Brake Hose (to Front Caliper)
16. About 65°
17. ABS Hydraulic Unit
18. Brake Pipe (to Rear Caliper)
19. About 29.9°
20. Brake Pipe (to Rear Master Cylinder)
21. About 28.3°

Cable, Wire, and Hose Routing

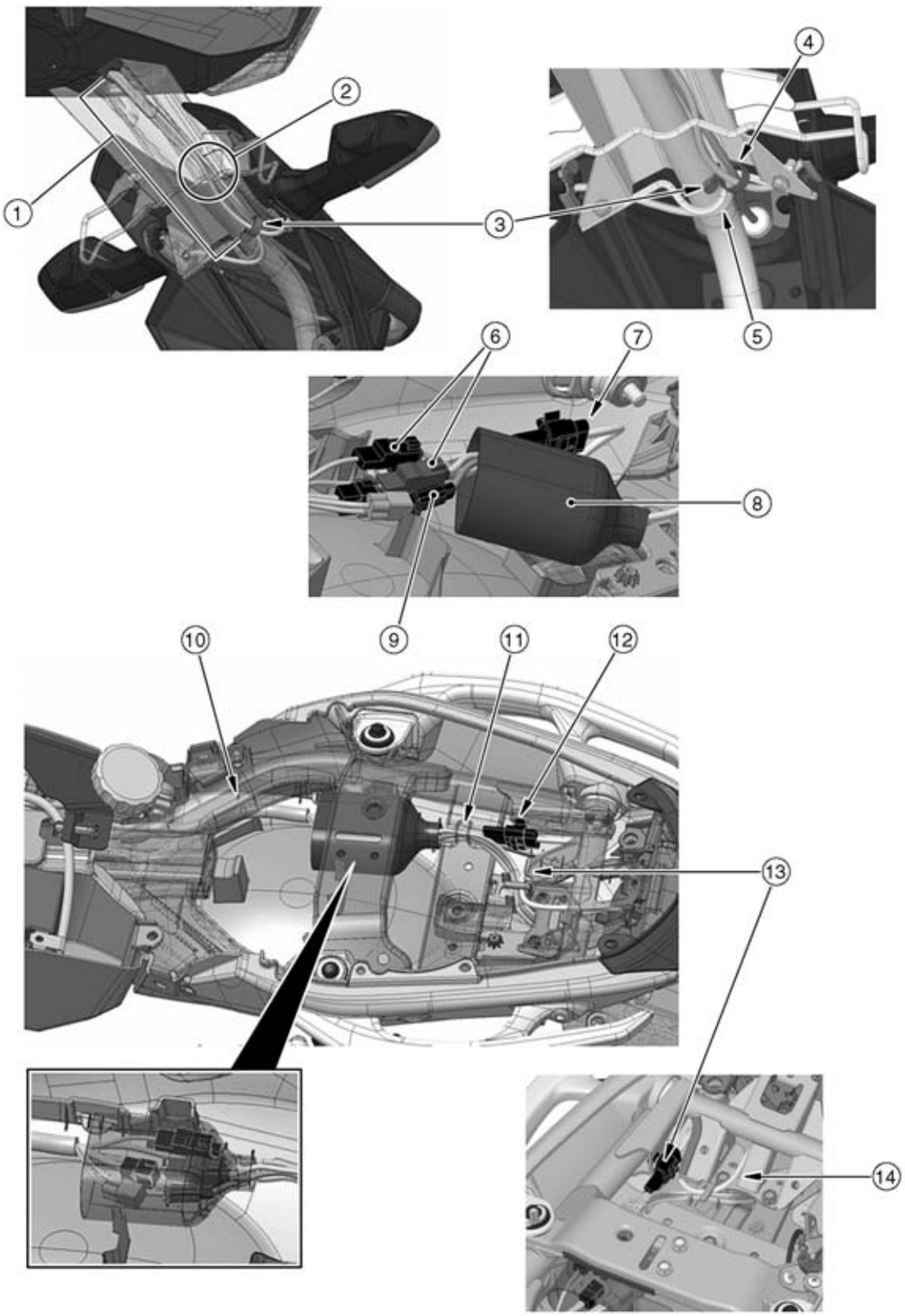

Cable, Wire, and Hose Routing

1. Do not loosen the leads in this area.
2. Run the leads above the hook on the reinforce.
3. Fix the clamp to the reinforce.
4. Run the leads under the hook on the reinforce.
5. Run the rear right turn signal light lead behind the hook on the reinforce.
6. Rear Turn Signal Light Lead Connectors
7. Locate the tail/brake light lead connector outside the dust cover.
8. Dust Cover
9. License Plate Light Lead Connector
10. Be sure to run the harness under the frame and outside the rib on the rear fender.
11. Hook (Hold the rear turn signal light leads, the license plate light lead and the tail/brake light lead.)
12. Fix the tail/brake light lead connector to the frame gusset.
13. Run the tail/brake light lead under the frame bracket.
14. Run the tail/brake light lead on the right side of the gusset.

Cable, Wire, and Hose Routing

The routing on EX650E/F is shown using the figure of ER650E/F.

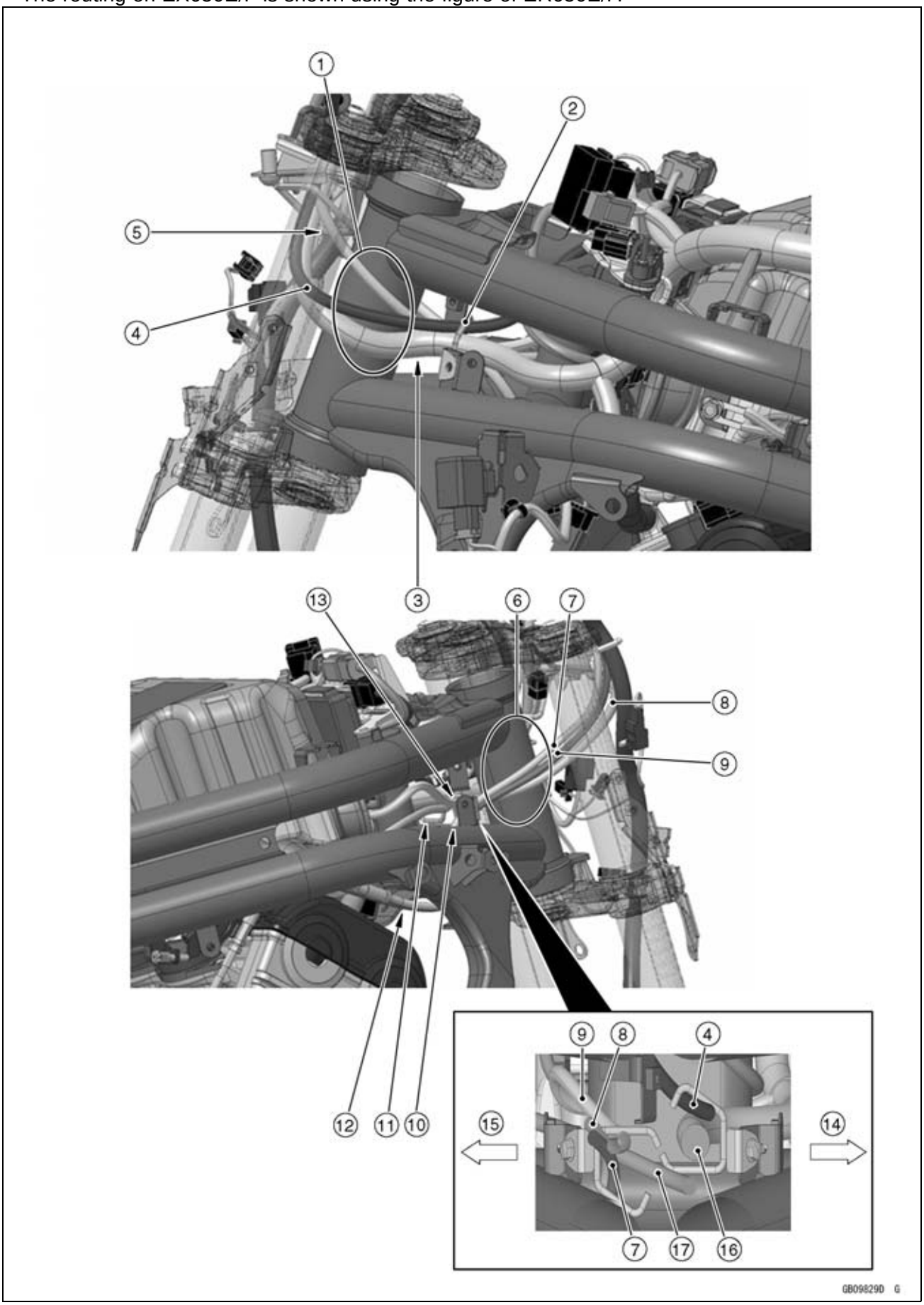

Cable, Wire, and Hose Routing

1. From upper to lower, run the following on the left side of the head pipe; clutch cable, left switch housing lead, main harness.
2. Guide
3. Run the main harness as follows; through the guide, on the left side of the head pipe, inside the clamp on the bracket.
4. Left Switch Housing Lead
5. Run the clutch cable as follows; through the guide (right side), on the right side of the head pipe, inside the clamp on the bracket.
6. From upper to lower, run the following on the right side of the head pipe; decelerator throttle cable, accelerator throttle cable, right switch housing lead.
7. Decelerator Throttle Cable
8. Right Switch Housing Lead
9. Accelerator Throttle Cable
10. Guide
11. Run the clutch cable above the frame cross pipe.
12. Run the throttle cables under the frame cross pipe.
13. Run the right switch housing lead inside the throttle cables.
14. Left Side
15. Right Side
16. Main Harness
17. Clutch Cable

Cable, Wire, and Hose Routing

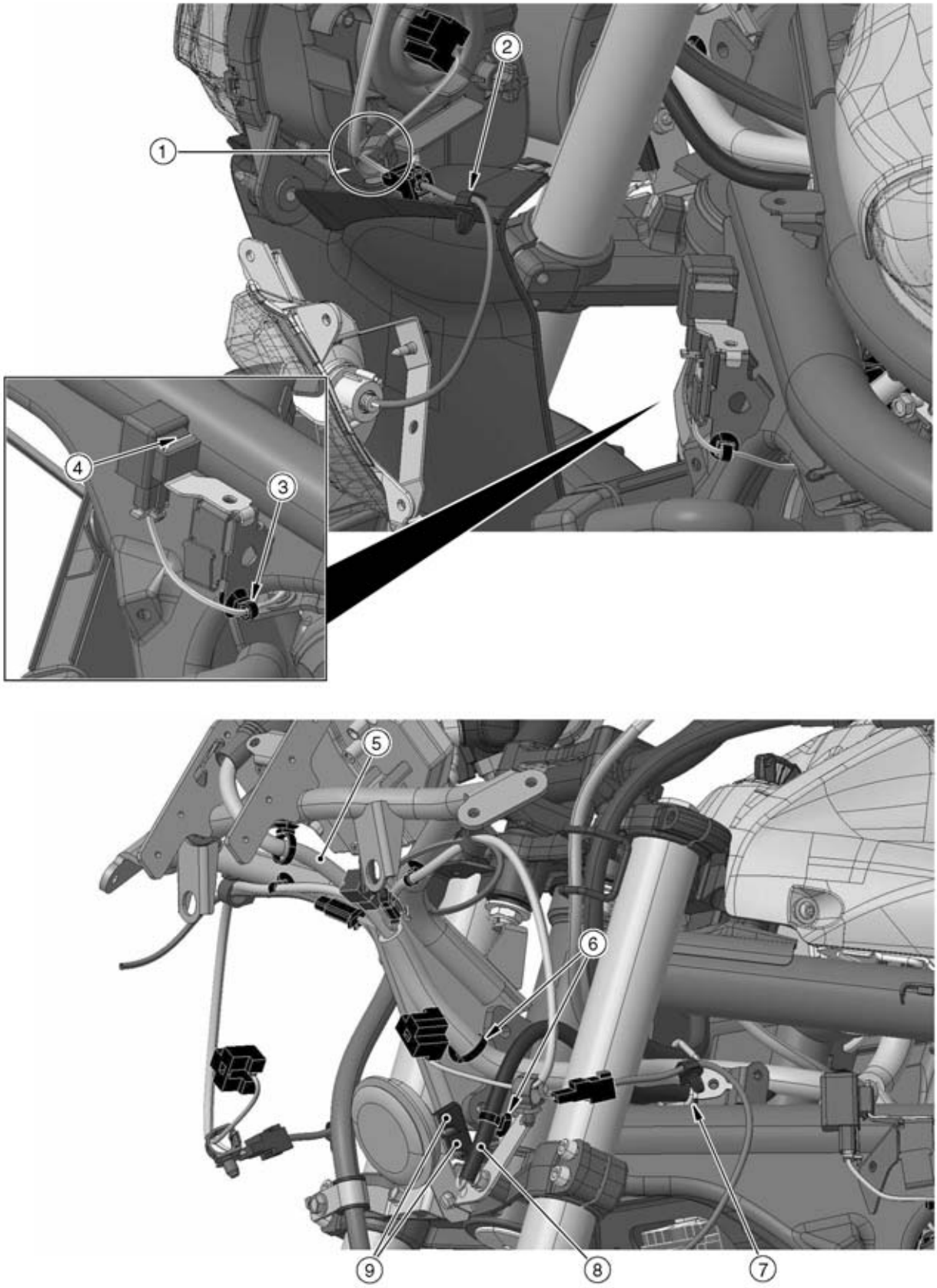

Cable, Wire, and Hose Routing

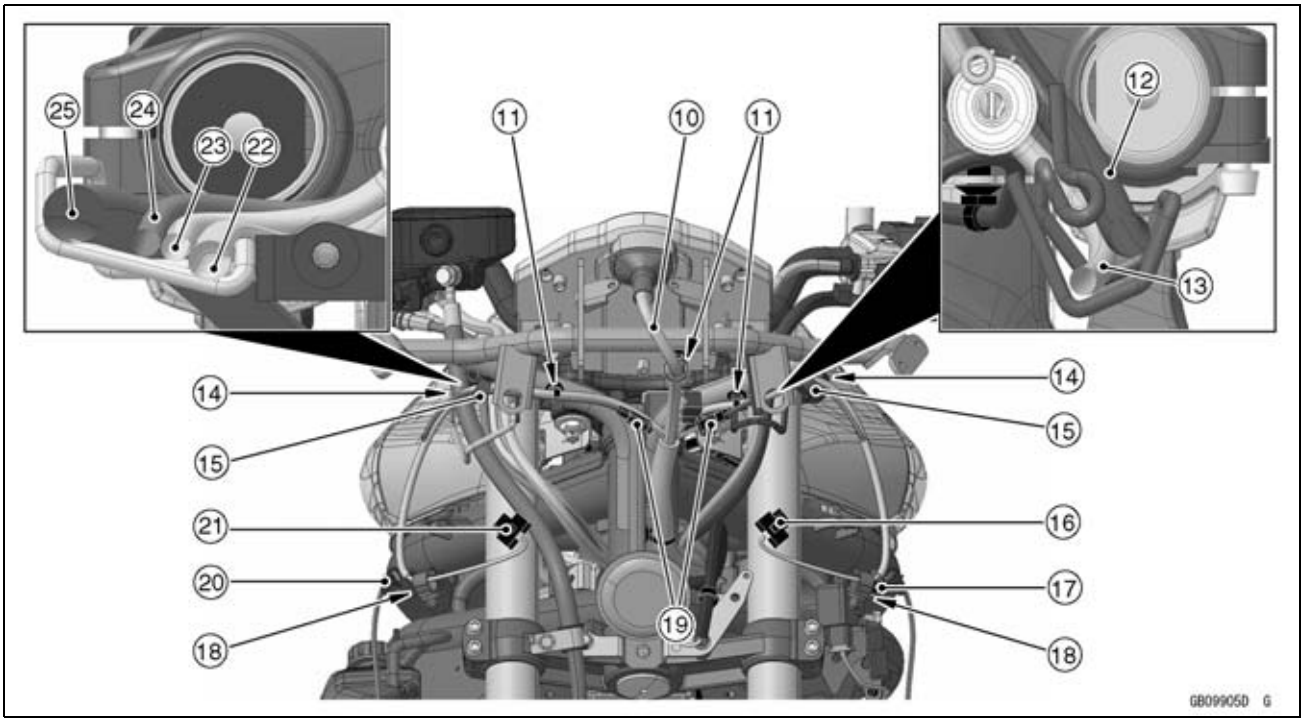

1. Clamp (Hold the headlight lead as shown.)
2. Clamp (Hold the turn signal light lead.)
3. Clamp (Hold the turn signal relay lead.)
4. Fix the turn signal relay to the frame.
5. Main Harness
6. Fix the clamps to the bracket.
7. Run the horn leads through the guide, and under the main harness.
8. Horn Lead
9. Connect the horn lead connectors as shown.
10. Meter Unit Lead
11. Fix the clamps to the bracket.
12. Left Switch Housing Lead
13. Clutch Cable
14. Run the city light lead and main harness through the clamp.
15. Fix the clamps to the bracket.
16. Headlight Lead Connector (High Beam)
17. Left Turn Signal Light Connector
18. Fix the clamps to the lower inner fairing.
19. City Light Lead Connectors
20. Right Turn Signal Light Connector
21. Headlight Lead Connector (Low Beam)
22. Right Switch Housing Lead
23. Decelerator Throttle Cable
24. Accelerator Throttle Cable
25. Brake Hose (Front Master Cylinder ~ ABS Hydraulic Unit)

Cable, Wire, and Hose Routing

The routing on EX650E/F is shown using the figure of ER650E/F.

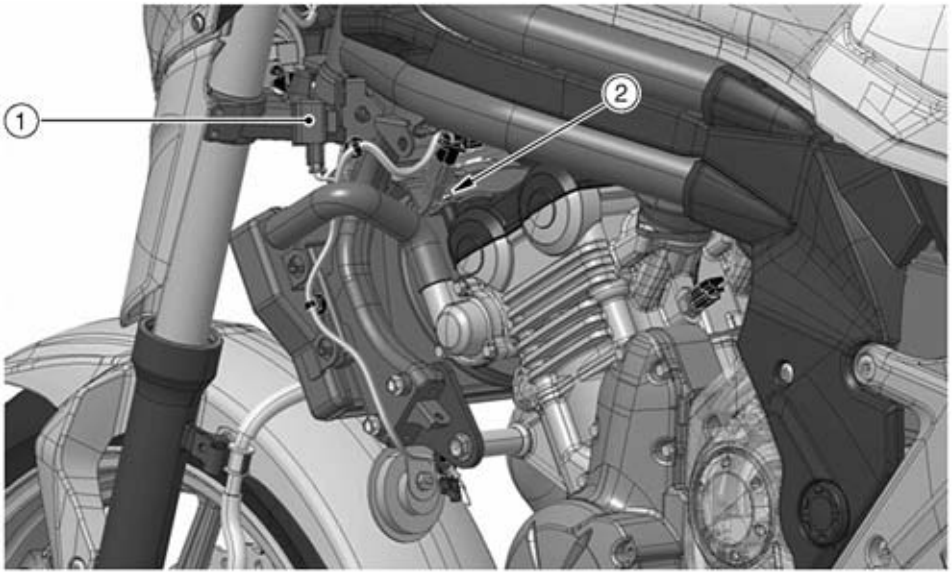

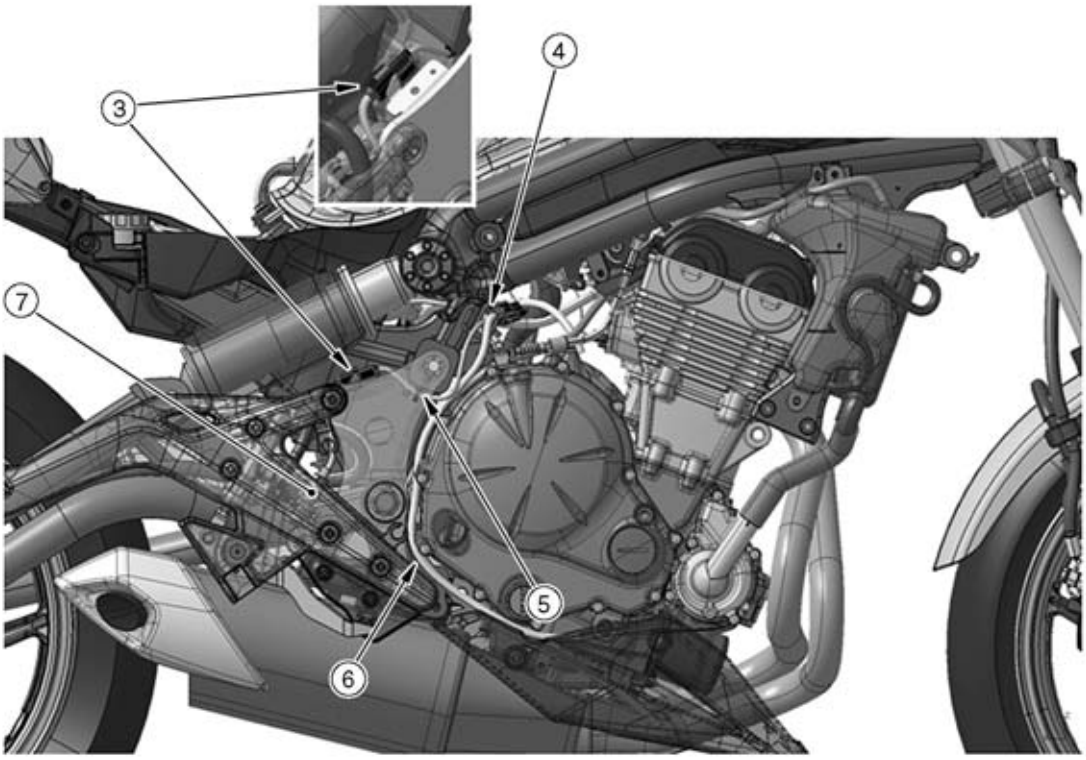

GB099070 G

Cable, Wire, and Hose Routing

1. Turn Signal Relay
2. Run the radiator fan lead inside the frame.
3. Fix the rear brake light switch lead connector to the clamp on the swingarm bracket.
4. Hook (Hold the rear brake light switch lead and the crankshaft sensor lead.)
5. Fix the clamp to the frame under the frame cross pipe.
6. Run the crankshaft sensor lead along the clutch cover.
7. Rear Brake Light Switch

Cable, Wire, and Hose Routing

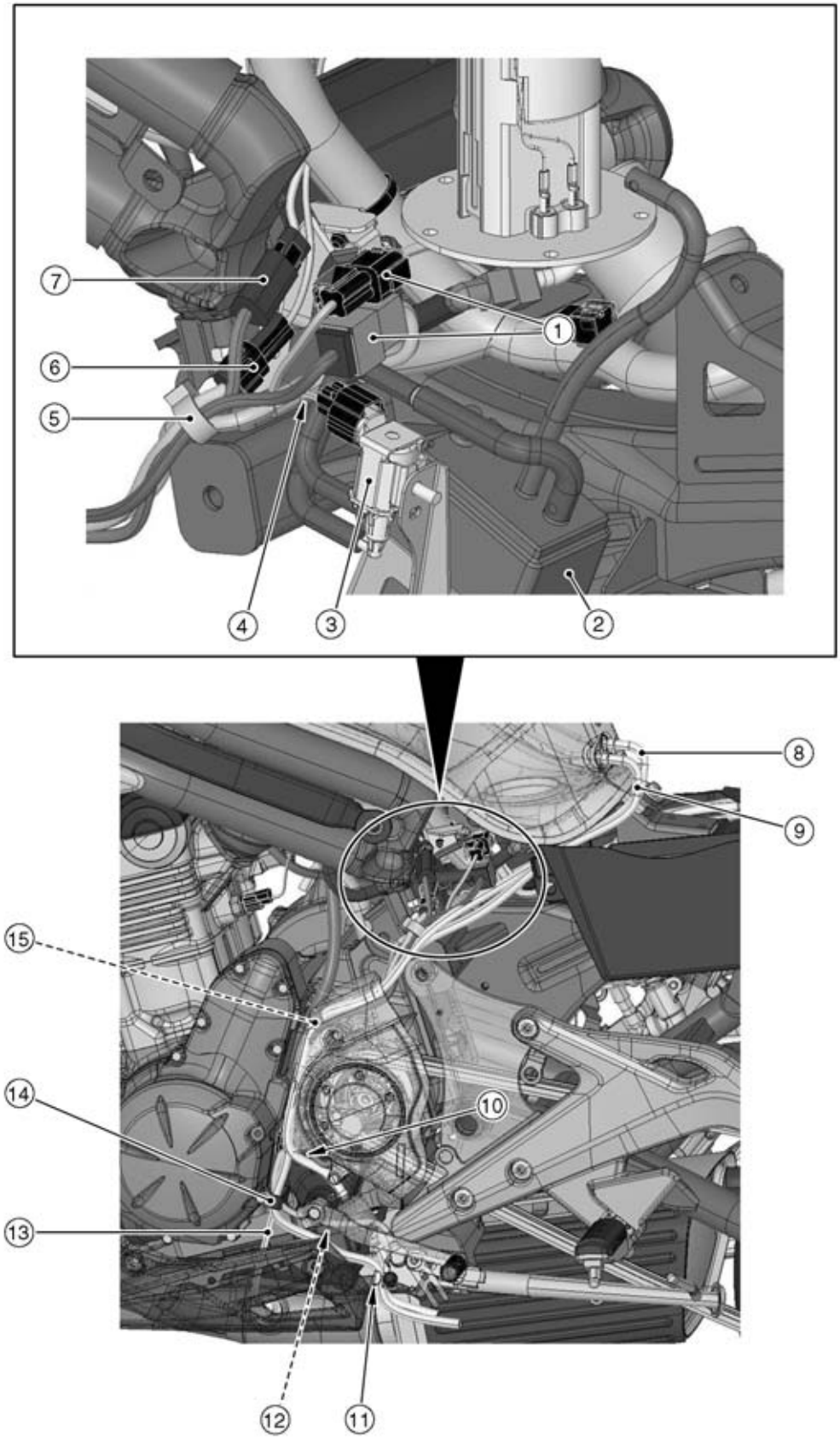

Cable, Wire, and Hose Routing

1. Fix the fuel pump lead connector (upper) and the alternator lead connector (lower) to the bracket.
2. Canister*
3. Purge Valve*
4. Run the harness in front of the tube (purge valve ~ canister)*
5. Clamp (Hold the following; alternator lead, speed sensor lead, sidestand switch lead, oxygen sensor lead.)
6. Sidestand Switch Lead Connector
7. Speed Sensor Lead Connector
8. Fuel Tank Breather Hose
9. Fuel Drain Hose
10. Run the breather tube outside the sidestand switch lead (other than CAL, SEA-B1 and TH models).
11. Clamp (Hold the breather tube and the fuel drain hose.)
12. Sidestand Switch Lead
13. Oxygen Sensor Lead (Equipped Models)
14. Clamp (From outside to inside, hold the following; fuel drain hose, oxygen sensor lead, sidestand switch lead.)
15. Clamp (Hold the following; breather tube, fuel drain hose, alternator lead, speed sensor lead, oxygen sensor lead.)

* CAL, SEA-B1 and TH Models

Cable, Wire, and Hose Routing

The routing on EX650E/F is shown using the figure of ER650E/F.

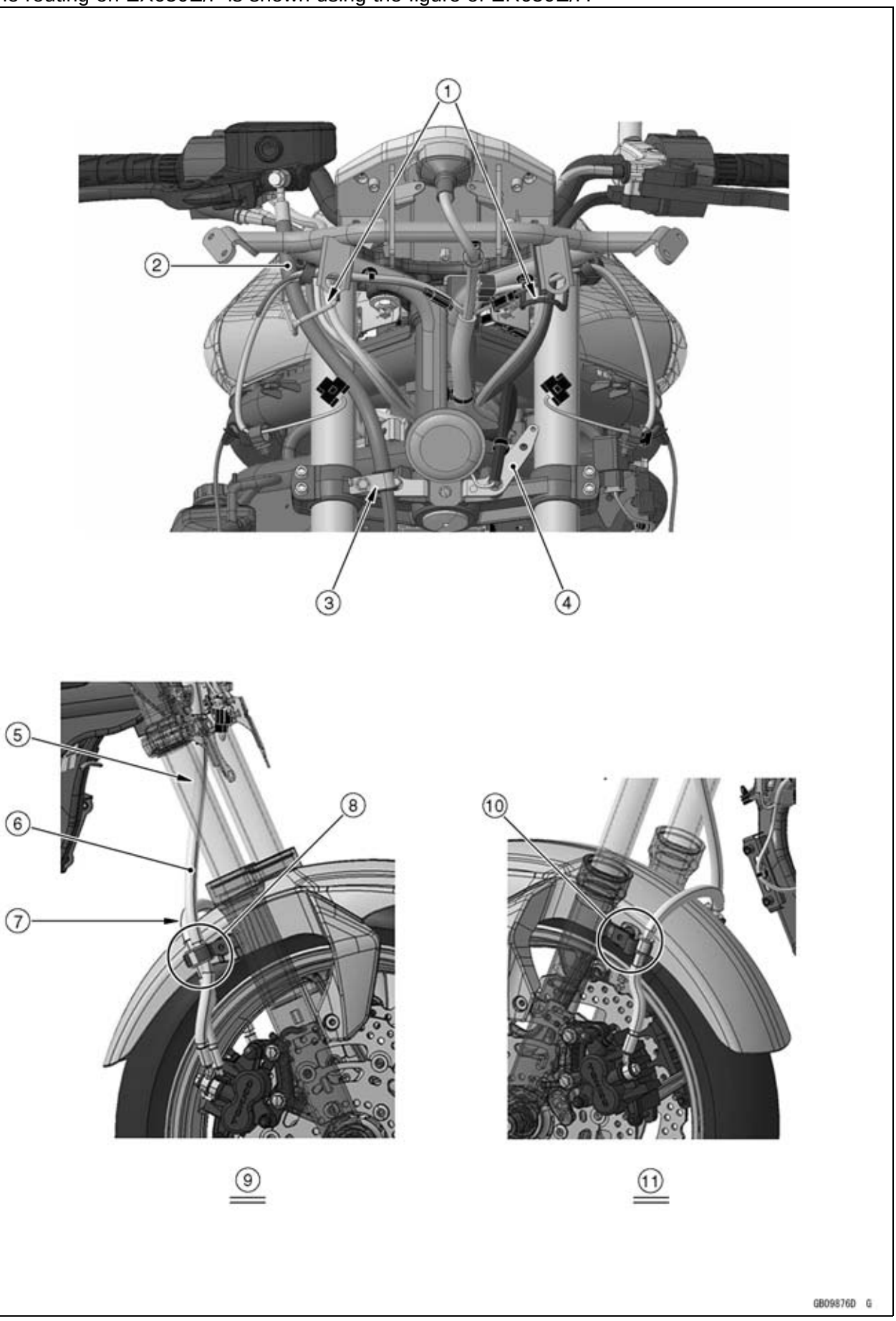

Cable, Wire, and Hose Routing

1. Guides
2. Run the brake hose (front master cylinder ~ front right caliper) through the guide.
3. Fix the clamp to the bracket.
4. Bracket
5. Run the brake hose inside the front fork.
6. Brake Hose (Front Master Cylinder ~ Front Right Caliper)
7. Brake Hose (between the Front Calipers)
8. Clamp (Hold the brake hoses.)
9. Right Side
10. Clamp (Hold the brake hose.)
11. Left Side

Cable, Wire, and Hose Routing

ABS Equipped Models

The routing on EX650E/F is shown using the figure of ER650E/F.

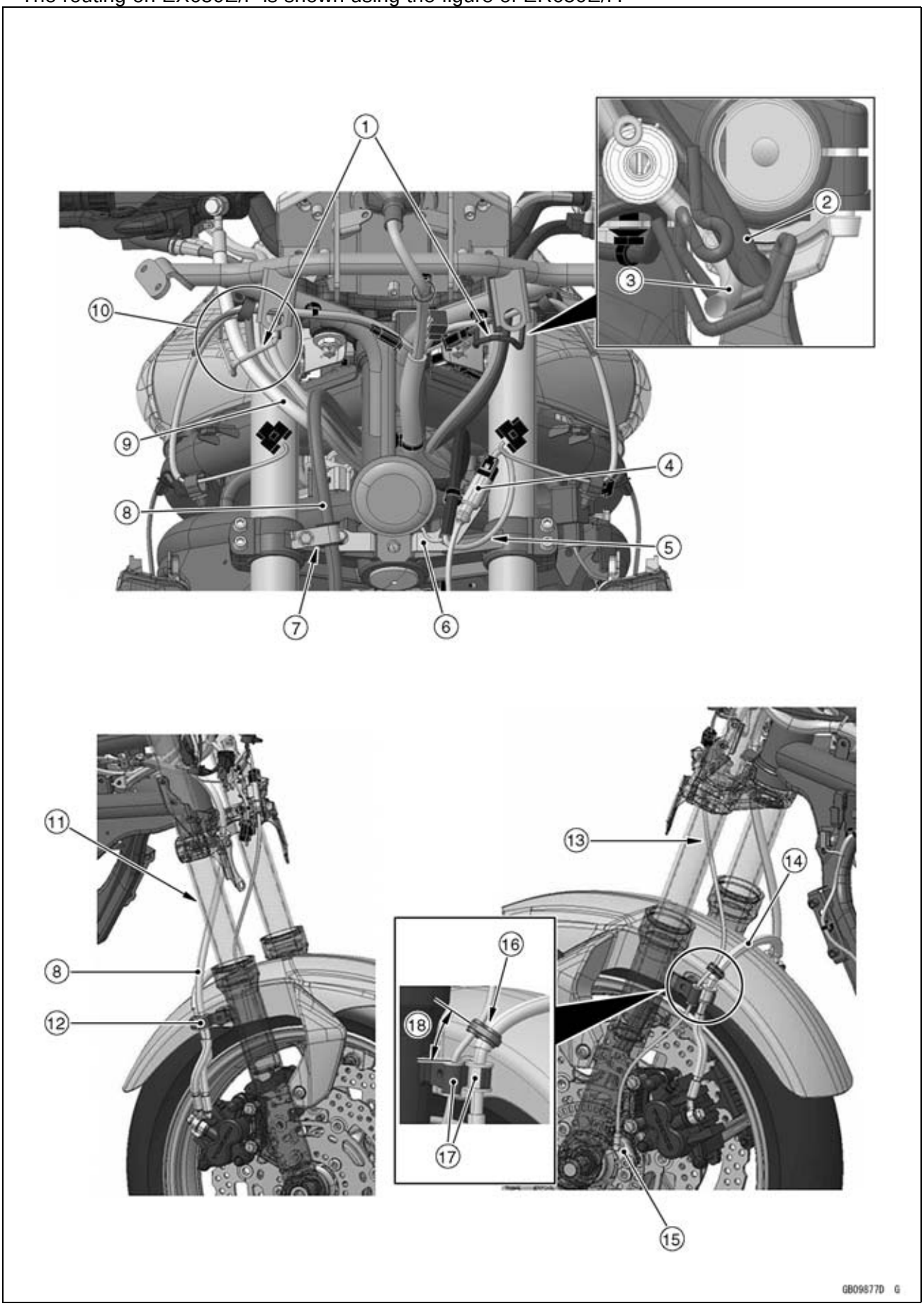

Cable, Wire, and Hose Routing

1. Guides
2. Left Switch Housing Lead
3. Clutch Cable
4. Fix the front wheel rotation sensor lead connector to the bracket.
5. Run the front wheel rotation sensor lead as shown.
6. Bracket
7. Fix the clamp to the bracket.
8. Brake Hose (ABS Hydraulic Unit ~ Front Caliper)
9. Run the brake hose (front master cylinder ~ ABS hydraulic unit) through the guide.
10. From inside to outside, run the right switch housing lead, the decelerator throttle cable, the accelerator throttle cable and brake hose (front master cylinder ~ ABS hydraulic unit).
11. Run the brake hose inside the front fork.
12. Clamp (Hold the brake hoses.)
13. Run the front wheel rotation sensor lead inside the front fork.
14. Brake Hose (between the Front Calipers)
15. Front Wheel Rotation Sensor
16. Position the clamp as shown.
17. Clamps (Hold the front wheel rotation sensor lead and the brake hose.)
18. Approx. 30 mm (1.2 in.)

Cable, Wire, and Hose Routing

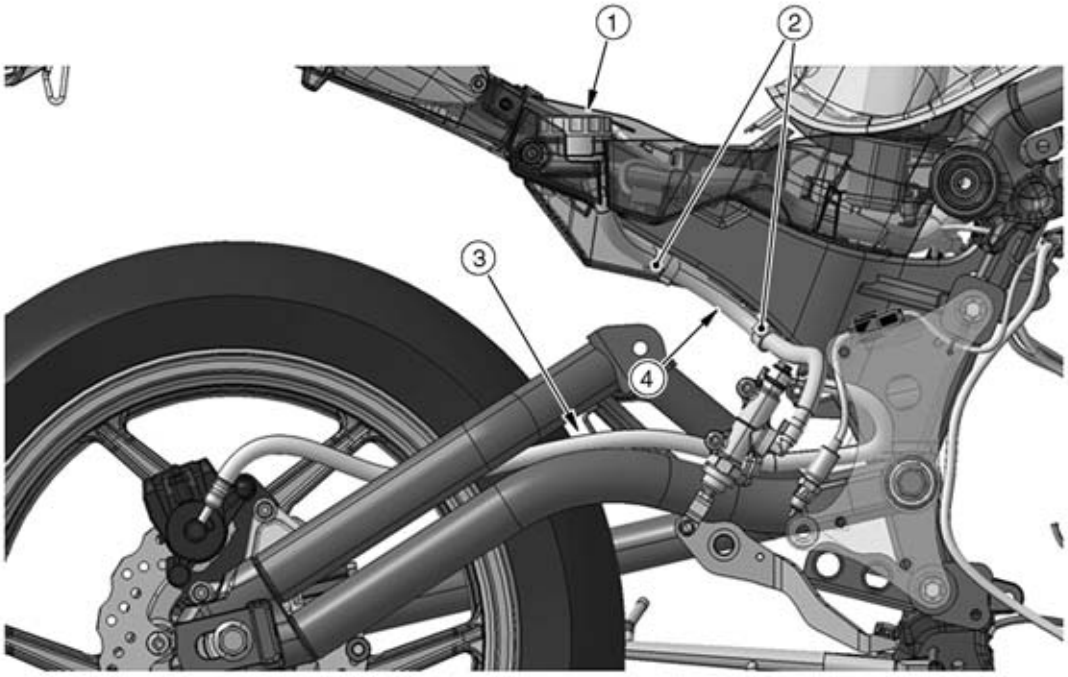

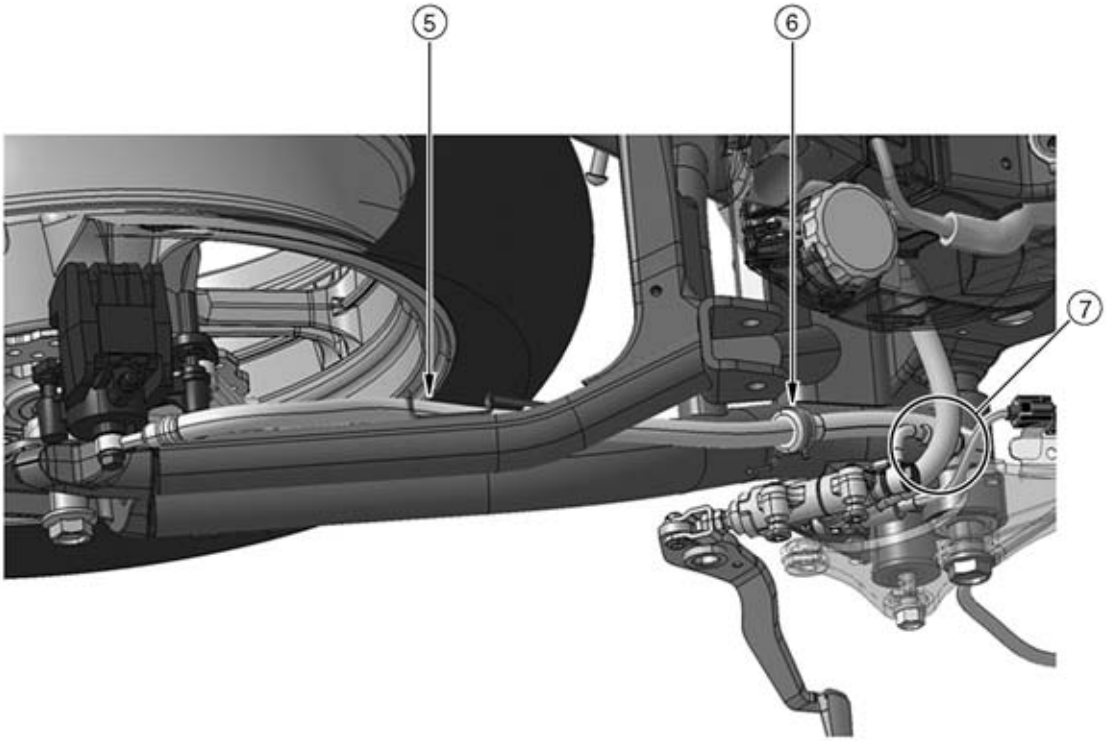

GB09835D G

Cable, Wire, and Hose Routing

1. Fix the rear brake reservoir tank to the battery case.
2. Clamps
3. Run the brake hose (rear master cylinder ~ rear caliper) through the swingarm.
4. Fix the brake hose (rear brake reservoir tank ~ rear master cylinder) to the frame with the clamps.
5. Run the brake hose between the clamp and the swingarm.
6. Fix the brake hose to the clamp on the swingarm.
7. Run the brake hose (rear master cylinder ~ rear caliper) under the brake hose (rear brake reservoir tank ~ rear master cylinder).

Cable, Wire, and Hose Routing

ABS Equipped Models

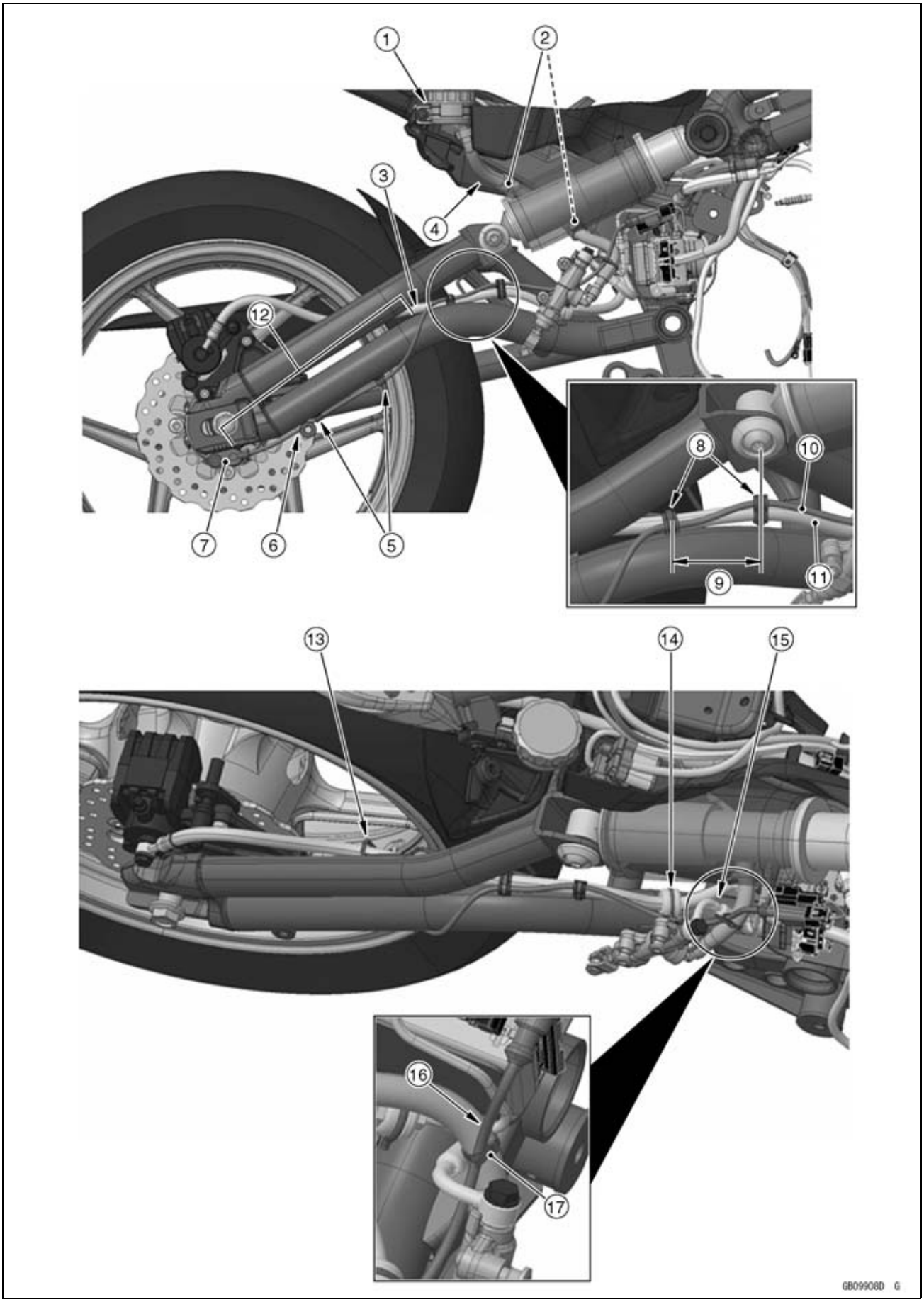

Cable, Wire, and Hose Routing

1. Fix the rear brake reservoir tank to the battery case.
2. Clamps
3. Run the brake hose (ABS hydraulic unit ~ rear caliper) through the swingarm.
4. Fix the brake hose (rear brake reservoir tank ~ rear master cylinder) to the frame with the clamps.
5. Fix the rear wheel rotation sensor lead to the swingarm with the clamps.
6. Run the rear wheel rotation sensor lead inside the boss.
7. Rear Wheel Rotation Sensor
8. Clamps
9. 55 ~ 65 mm (2.2 ~ 2.6 in.)
10. Rear Wheel Rotation Sensor Lead
11. Brake Hose (ABS Hydraulic Unit ~ Rear Caliper)
12. Do not loosen the rear wheel rotation sensor lead in this area.
13. Run the brake hose between the clamp and swingarm.
14. Fix the brake hose to clamp on the swingarm.
15. Run the brake hose (rear master cylinder ~ ABS hydraulic unit) under the brake hose (rear brake reservoir tank ~ rear master cylinder).
16. Run the rear wheel rotation sensor lead between the brake hose fitting on the rear master cylinder and the brake hose (rear brake reservoir tank ~ rear master cylinder).
17. Fix the rear wheel rotation sensor lead to the brake hose (rear brake reservoir tank ~ rear master cylinder) with the band.

Cable, Wire, and Hose Routing

ABS Equipped Models

The routing on EX650E/F is shown using the figure of ER650E/F.

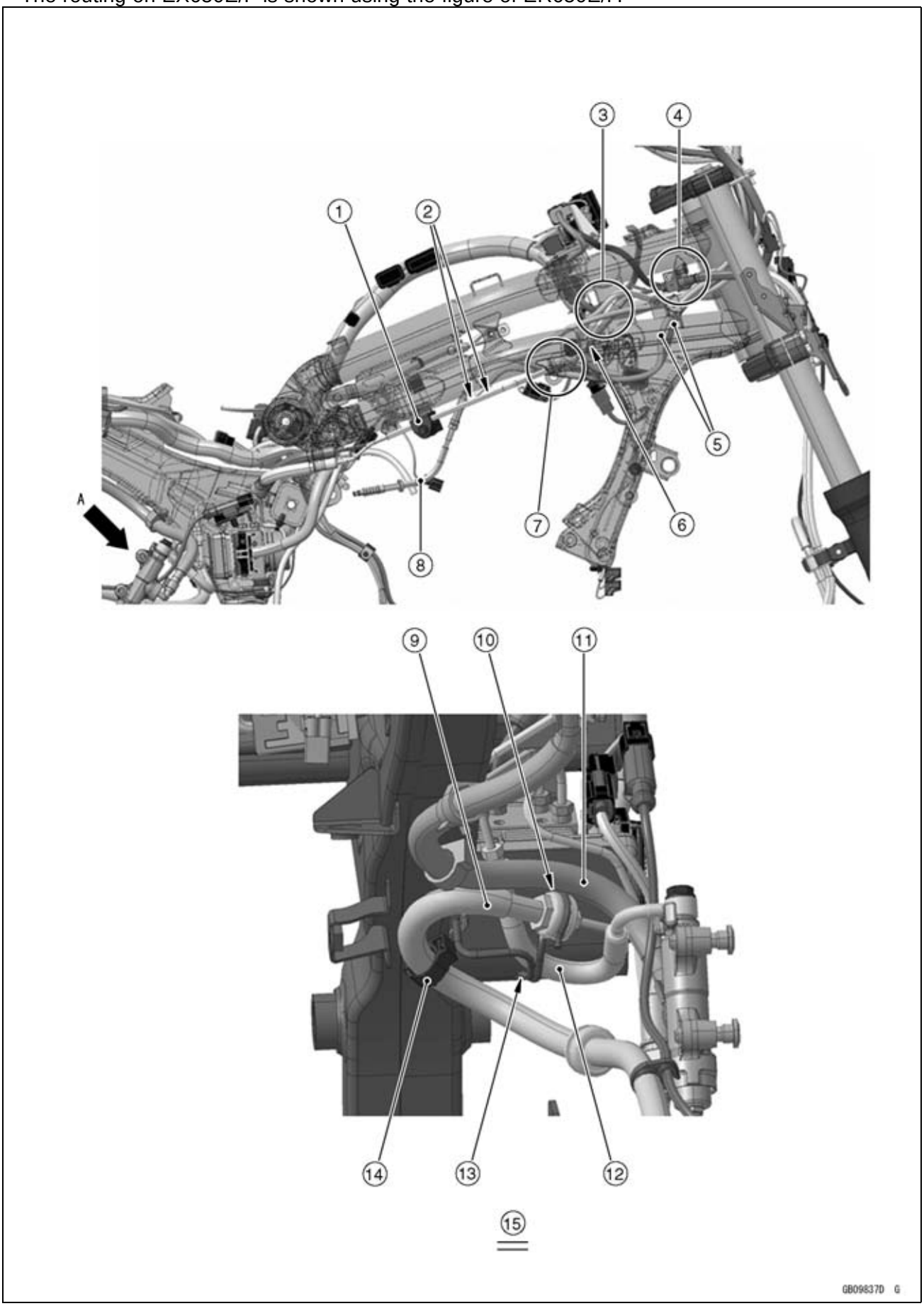

Cable, Wire, and Hose Routing

ABS Equipped Models

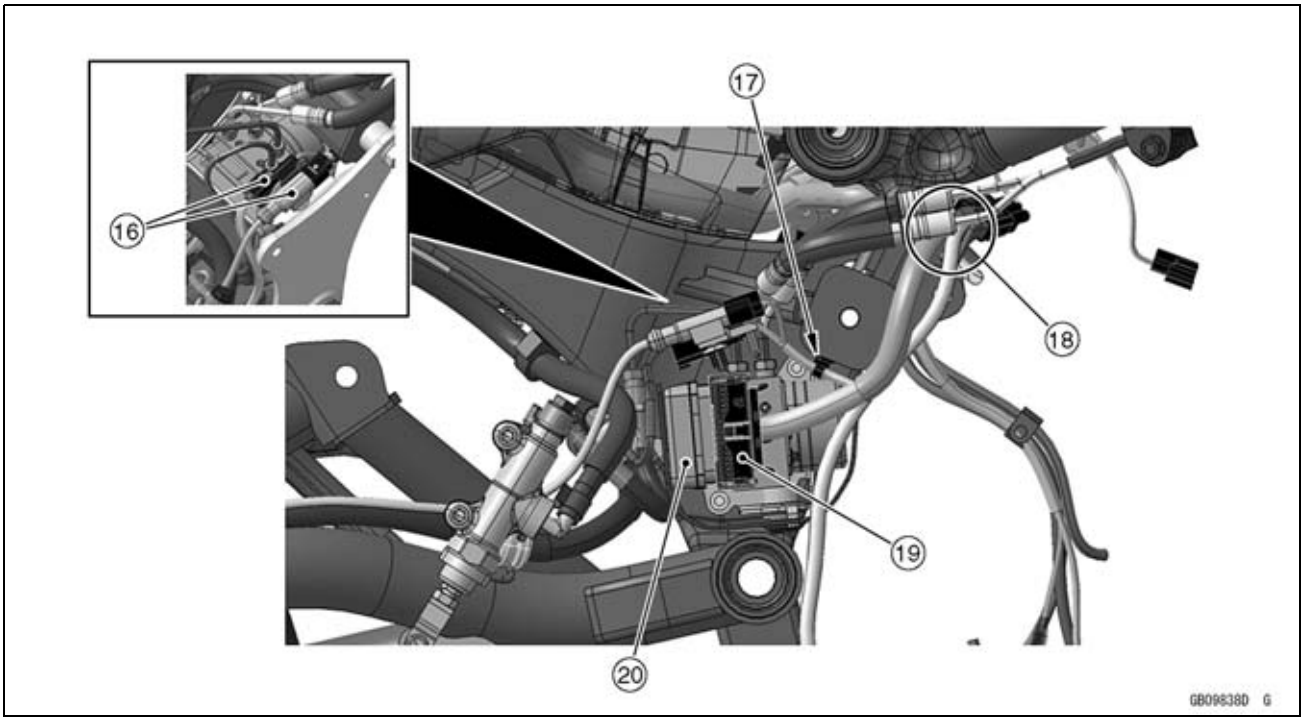

1. Collar and Damper (Hold the brake pipes.)
2. Run the brake pipe (front master cylinder ~ ABS hydraulic unit) inside the brake pipe (ABS hydraulic unit ~ front caliper).
3. Run the brake pipe (ABS hydraulic unit ~ front caliper) between the right switch housing lead and the frame (inside the clutch cable).
4. Bracket (Hold the brake pipes.)
5. Throttle Cables
6. Cross the brake pipes in this area.
7. Run the brake pipes above the throttle cables and under the clutch cable.
8. Clutch Cable
9. Run the brake hose (ABS hydraulic unit ~ rear caliper) between the brake hose (rear brake reservoir tank ~ rear master cylinder) and the brake hose (rear master cylinder ~ ABS hydraulic unit).
10. Fix the brake hose to the clamp on the ABS hydraulic unit bracket.
11. Brake Hose (Rear Brake Reservoir Tank ~ Rear Master Cylinder)
12. Brake Hose (Rear Master Cylinder ~ ABS Hydraulic Unit)
13. Run the brake hose above the clamp on the ABS hydraulic unit bracket.
14. Fix the brake hose (ABS hydraulic unit ~ rear caliper) to the frame with the clamp.
15. View from A
16. Fix the rear brake light switch lead connector (inside) and the rear wheel rotation sensor lead connector (outside) to the clamp on the swingarm bracket.
17. Fix the rear brake light switch lead and the rear wheel rotation sensor lead to the frame with the clamp.
18. Hook the ABS hydraulic unit lead and crankshaft sensor lead to the clamp on the frame.
19. ABS Hydraulic Unit Connector
20. ABS Hydraulic Unit

Cable, Wire, and Hose Routing

The routing on EX650E/F is shown using the figure of ER650E/F.

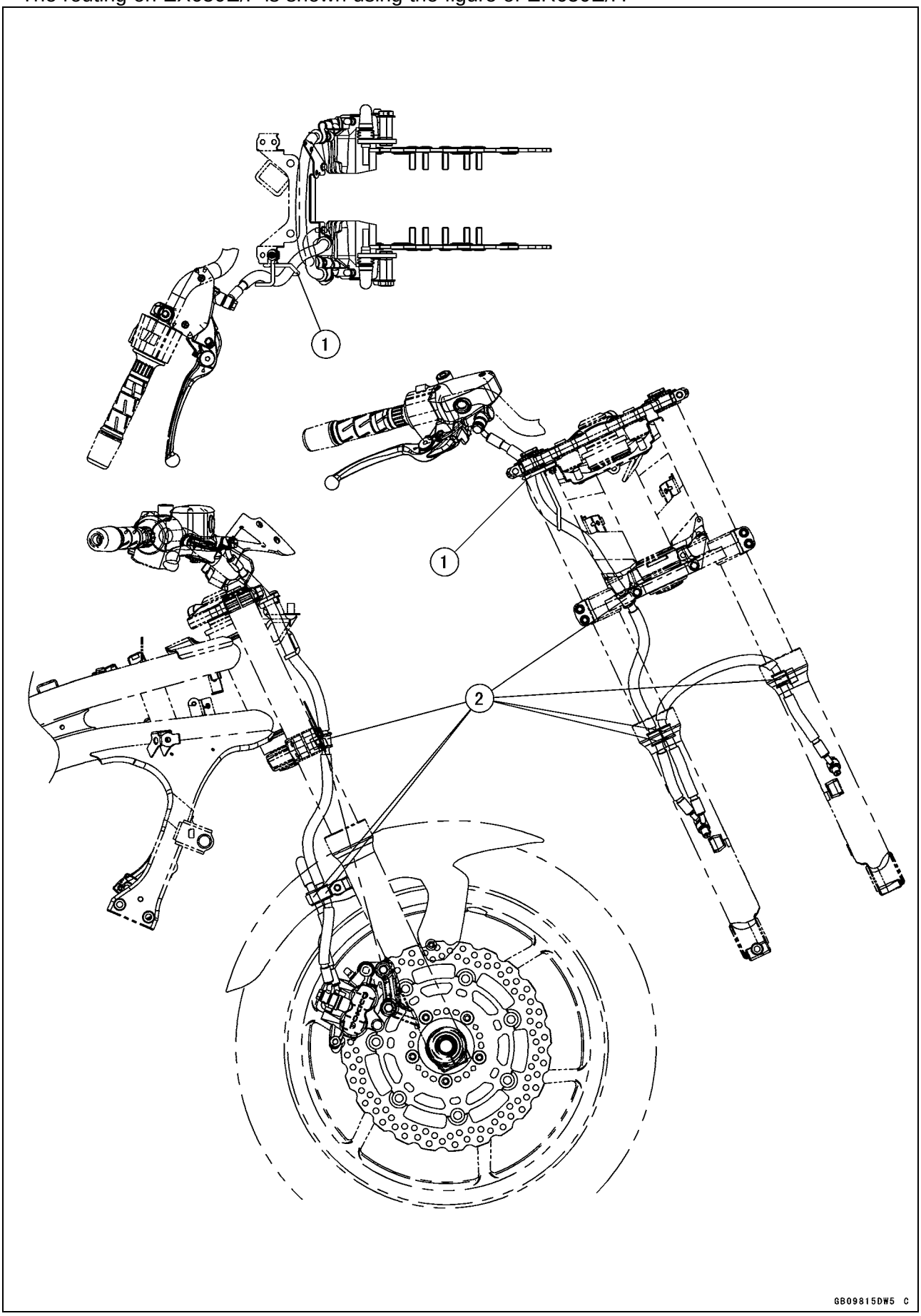

Cable, Wire, and Hose Routing

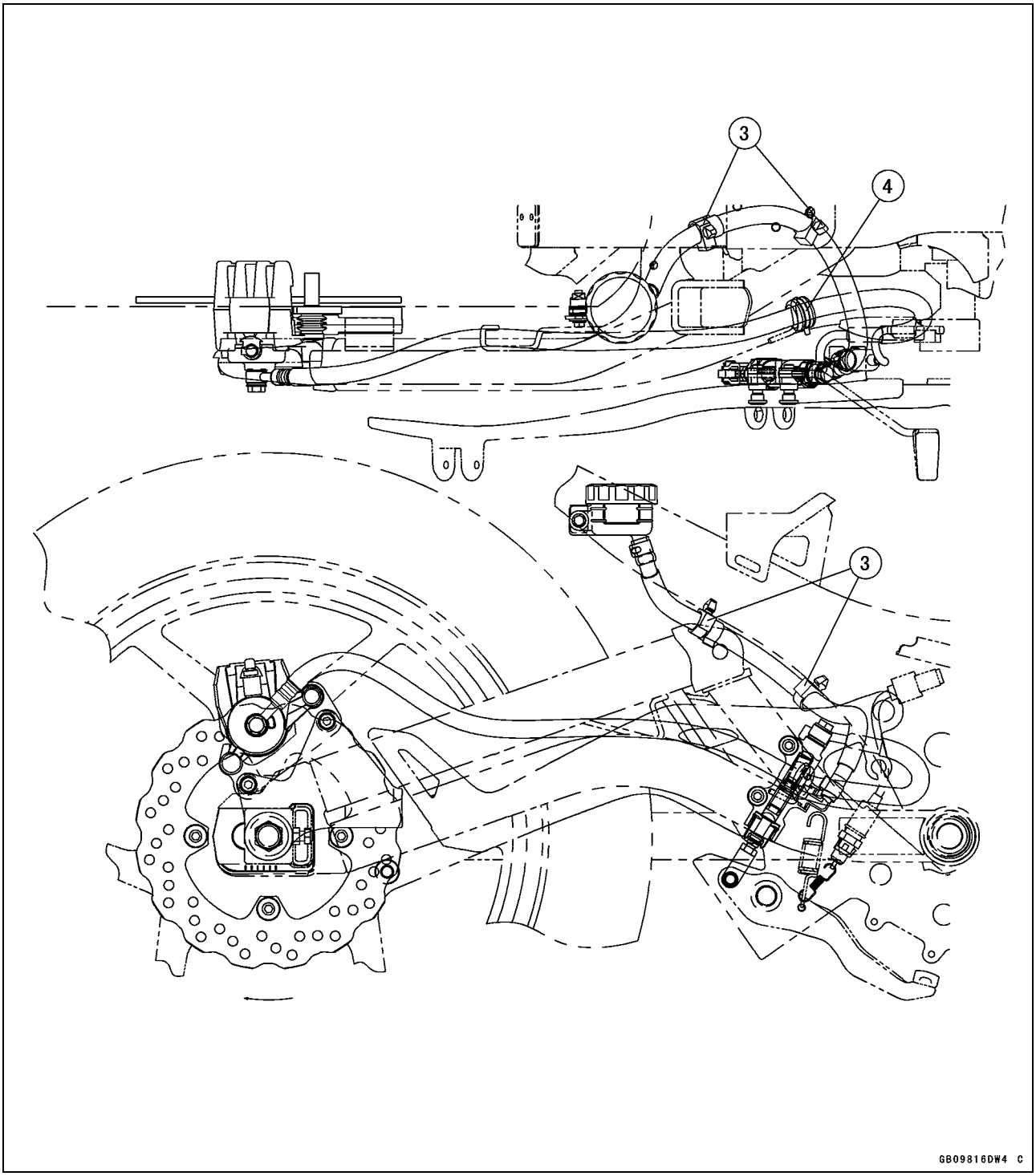

1. Guide (Run the front brake hose through the guide.)
2. Clamps (Hold the front brake hose.)
3. Clamps (Hold the rear brake hose.)
4. Clamp with Damper (Hold the rear brake hose.)

Cable, Wire, and Hose Routing

ABS Equipped Models

The routing on EX650E/F is shown using the figure of ER650E/F.

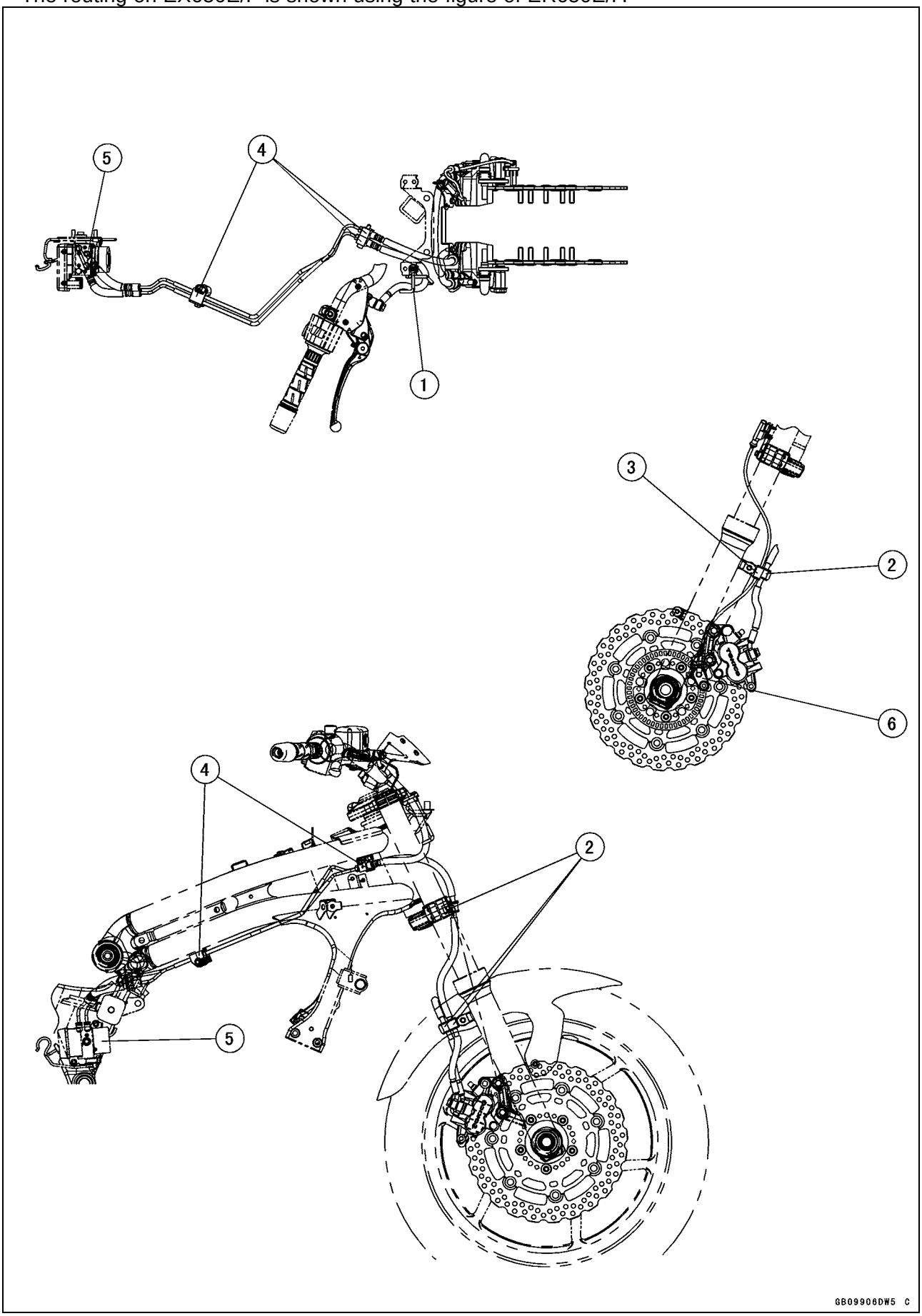

Cable, Wire, and Hose Routing

ABS Equipped Models

The routing on EX650E/F is shown using the figure of ER650E/F.

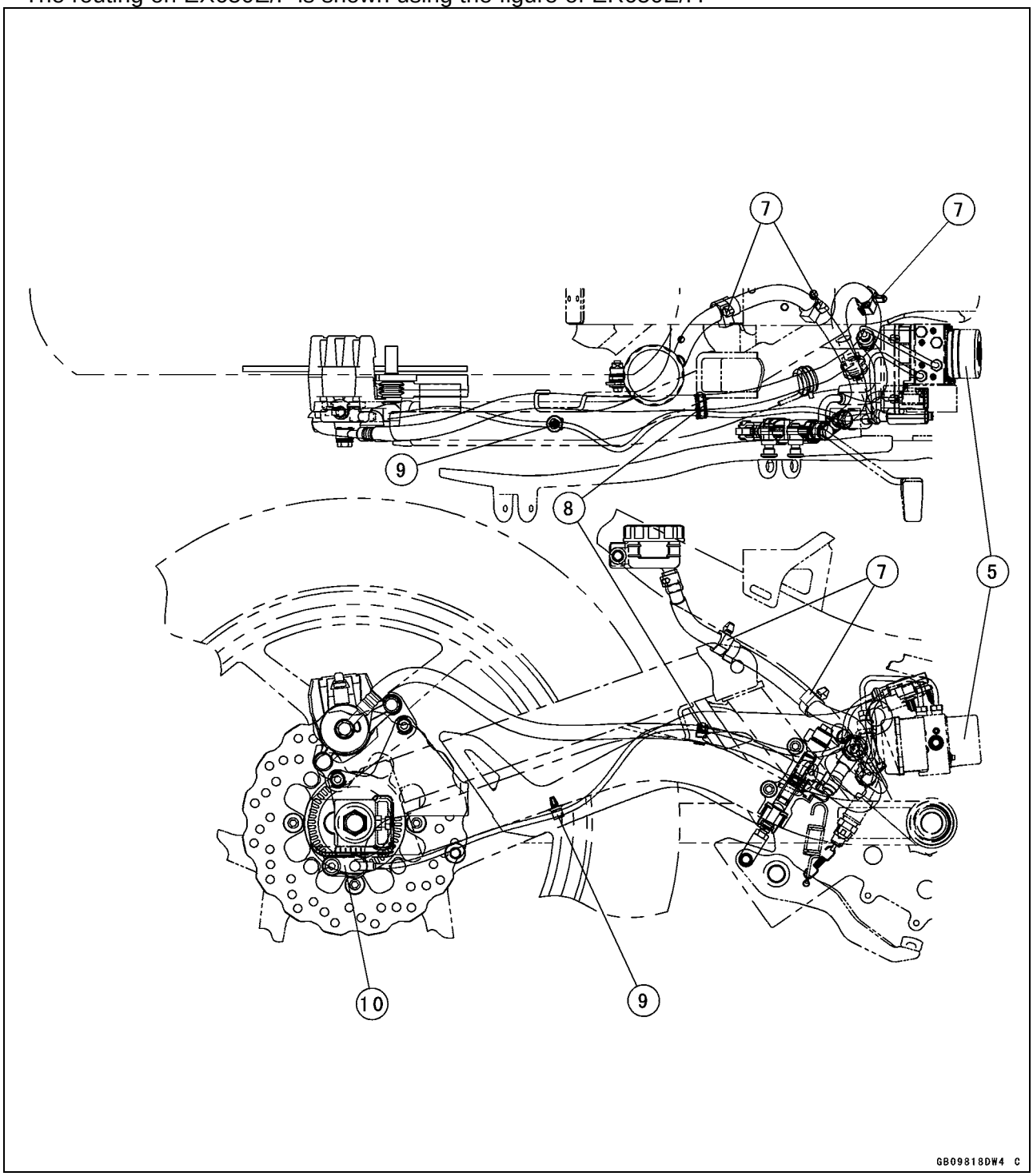

1. Guide (Run the front brake hose through the guide.)
2. Clamps (Hold the front brake hose.)
3. Clamp (Hold the front wheel rotation sensor lead.)
4. Clamps (Hold the brake pipe.)
5. ABS Hydraulic Unit
6. Front Wheel Rotation Sensor
7. Clamps (Hold the rear brake hose.)
8. Clamp (Hold the rear brake hose and the rear wheel rotation sensor lead.)
9. Clamp (Hold the rear wheel rotation sensor lead.)
10. Rear Wheel Rotation Sensor

Cable, Wire, and Hose Routing

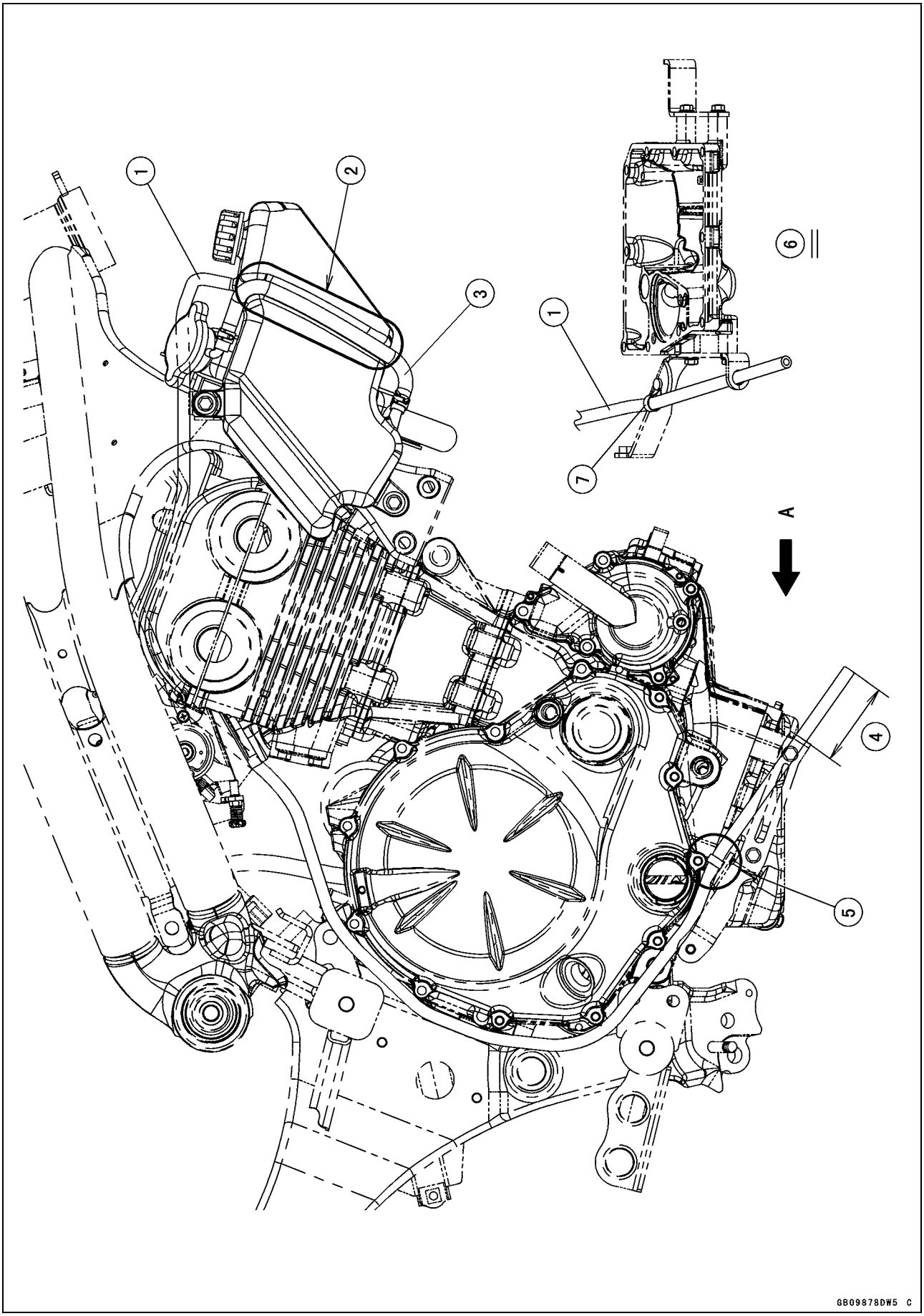

Cable, Wire, and Hose Routing

1. Reserve Tank Overflow Hose
2. Fit the reserve tank hose into the groove on the reserve tank.
3. Reserve Tank Hose
4. 40 mm (1.6 in.)
5. Run the reserve tank overflow hose through the clamp.
6. View from A
7. Clamp

Cable, Wire, and Hose Routing

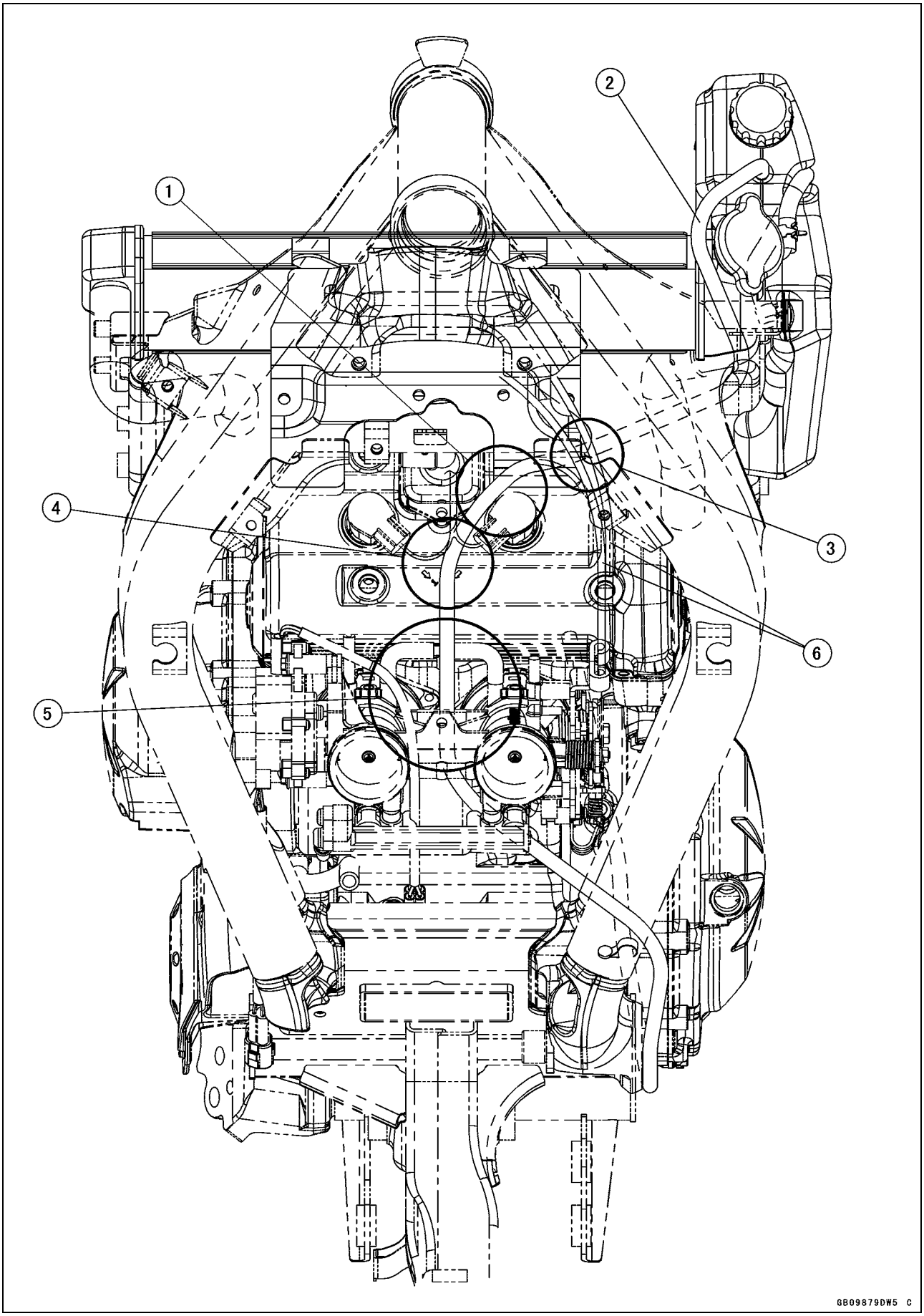

Cable, Wire, and Hose Routing

1. Run the reserve tank overflow hose between the air suction valve cover and the stick coil.
2. Reserve Tank Overflow Hose
3. Run the reserve tank overflow hose under the throttle cables.
4. Run the reserve tank overflow hose under the stick coil lead.
5. Run the reserve tank overflow hose above the hose on the throttle body assy (CAL, SEA-B1 and TH models).
6. Throttle Cables

Cable, Wire, and Hose Routing

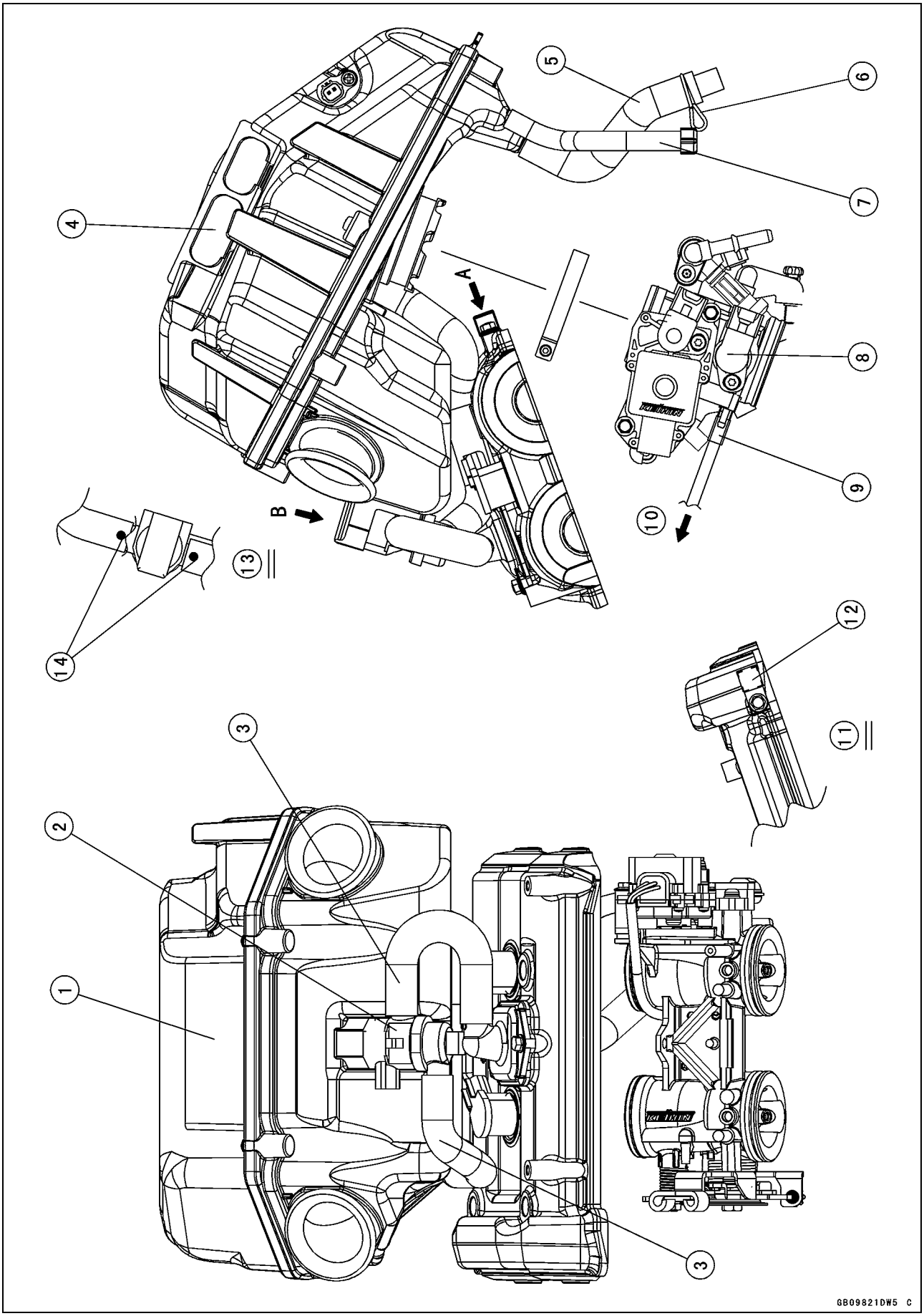

Cable, Wire, and Hose Routing

1. Air Cleaner Housing
2. Air Switching Valve
3. Air Switching Valve Hoses
4. ECU
5. Breather Hose
6. Clamp
7. Drain Hose
8. Throttle Body Assy
9. Vacuum Hose
10. To the Intake Air Pressure Sensor
11. View from A
12. Clamp
13. View from B
14. White Paint Marks

Cable, Wire, and Hose Routing

CAL, SEA-B1 and TH Models

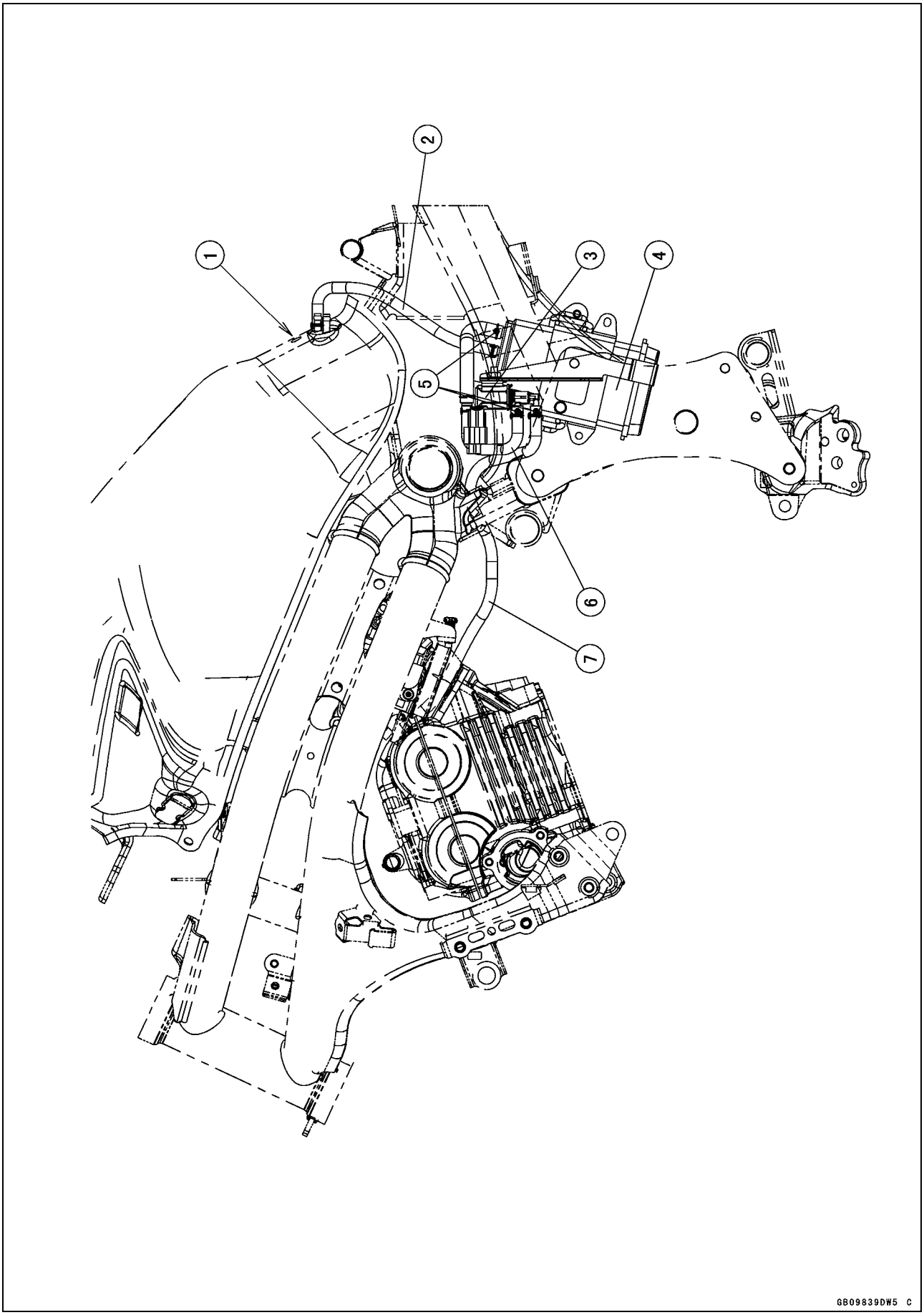

Cable, Wire, and Hose Routing

1. Blue Label
2. Tube (Fuel Tank ~ Canister)
3. Purge Valve
4. Canister
5. Green Paint Marks
6. Tube (Canister ~ Purge Valve)
7. Tube (Purge Valve ~ Throttle Body Assy)

Troubleshooting Guide

NOTE

○*Refer to the Fuel System (DFI) chapter for most of DFI trouble shooting guide.*

○*This is not an exhaustive list, giving every possible cause for each problem listed. It is meant simply as a rough guide to assist the troubleshooting for some of the more common difficulties.*

Engine Doesn't Start, Starting Difficulty:

Starter motor not rotating:
- Starter lockout switch or neutral switch trouble
- Starter motor trouble
- Battery voltage low
- Starter relay not contacting or operating
- Starter button not contacting
- Wiring open or shorted
- Ignition switch trouble
- Engine stop switch trouble
- Fuse blown

Starter motor rotating but engine doesn't turn over:
- Starter clutch trouble
- Vehicle-down sensor (DFI) coming off

Engine won't turn over:
- Valve seizure
- Valve lifter seizure
- Cylinder, piston seizure
- Crankshaft seizure
- Connecting rod small end seizure
- Connecting rod big end seizure
- Transmission gear or bearing seizure
- Camshaft seizure
- Starter idle gear seizure

No fuel flow:
- No fuel in tank
- Fuel pump trouble
- Fuel tank air vent obstructed
- Fuel filter clogged
- Fuel line clogged

Engine flooded:
- Clean spark plug and adjust plug gap
- Starting technique faulty
- (When flooded, do not crank the engine with the throttle fully opened. This promotes engine flood because more fuel is supplied automatically by DFI.)

No spark; spark weak:
- Vehicle-down sensor (DFI) coming off
- Ignition switch not ON
- Engine stop switch turned to stop position
- Clutch lever not pulled in or gear not in neutral
- Battery voltage low
- Spark plug dirty, broken, or gap maladjusted
- Stick coil shorted or not in good contact
- Stick coil trouble
- Spark plug incorrect
- IC igniter in ECU trouble
- Neutral, starter lockout, or side stand switch trouble
- Crankshaft sensor trouble
- Ignition switch or engine stop switch shorted
- Wiring shorted or open
- Fuse blown

Fuel/air mixture incorrect:
- Bypass screw and/or idle adjusting screw maladjusted
- Air passage clogged
- Air cleaner clogged, poorly sealed, or missing

Compression Low:
- Spark plug loose
- Cylinder head not sufficiently tightened down
- No valve clearance
- Cylinder, piston worn
- Piston ring bad (worn, weak, broken, or sticking)
- Piston ring/groove clearance excessive
- Cylinder head gasket damaged
- Cylinder head warped
- Valve spring broken or weak
- Valve not seating properly (valve bent, worn, or carbon accumulation on the seating surface)

Poor Running at Low Speed:

Spark weak:
- Battery voltage low
- Spark plug dirty, broken, or maladjusted
- Stick coil wiring trouble
- Stick coil not in good contact
- Spark plug incorrect
- IC igniter in ECU trouble
- Crankshaft sensor trouble
- Stick coil trouble

Fuel/air mixture incorrect:
- Bypass screw maladjusted
- Air passage clogged
- Air bleed pipe bleed holes clogged
- Pilot passage clogged
- Air cleaner clogged, poorly sealed, or missing
- Fuel tank air vent obstructed
- Fuel pump trouble
- Throttle body assy holder loose
- Air cleaner duct loose

Troubleshooting Guide

Compression low:
- Spark plug loose
- Cylinder head not sufficiently tightened down
- No valve clearance
- Cylinder, piston worn
- Piston ring bad (worn, weak, broken, or sticking)
- Piston ring/groove clearance excessive
- Cylinder head warped
- Cylinder head gasket damaged
- Valve spring broken or weak
- Valve not seating properly (valve bent, worn, or carbon accumulation on the seating surface)

Other:
- IC igniter in ECU trouble
- Throttle body assy not synchronizing
- Engine oil viscosity too high
- Drive train trouble
- Brake dragging
- Air suction valve trouble
- Air switching valve trouble
- Engine overheating
- Clutch slipping

Poor Running or No Power at High Speed:

Firing incorrect:
- Spark plug dirty, broken, or maladjusted
- Stick coil wiring trouble
- Stick coil not in good contact
- Spark plug incorrect
- Camshaft position trouble
- IC igniter in ECU trouble
- Crankshaft sensor trouble
- Stick coil trouble

Fuel/air mixture incorrect:
- Air cleaner clogged, poorly sealed, or missing
- Air cleaner O-ring damaged
- Air cleaner duct loose
- Water or foreign matter in fuel
- Throttle body assy holder loose
- Fuel to injector insufficient (DFI)
- Fuel tank air vent obstructed
- Fuel line clogged
- Fuel pump trouble

Compression low:
- Spark plug loose
- Cylinder head not sufficiently tightened down
- No valve clearance
- Cylinder, piston worn
- Piston ring bad (worn, weak, broken, or sticking)
- Piston ring/groove clearance excessive
- Cylinder head gasket damaged
- Cylinder head warped
- Valve spring broken or weak
- Valve not seating properly (valve bent, worn, or carbon accumulation on the seating surface)

Knocking:
- Carbon built up in combustion chamber
- Fuel poor quality or incorrect
- Spark plug incorrect
- IC igniter in ECU trouble
- Crankshaft sensor trouble

Miscellaneous:
- Throttle valve won't fully open
- Brake dragging
- Clutch slipping
- Engine overheating
- Engine oil level too high
- Engine oil viscosity too high
- Drive train trouble
- Air suction valve trouble
- Air switching valve trouble
- Catalytic converter melt down due to muffler overheating (KLEEN)

Overheating:

Firing incorrect:
- Spark plug dirty, broken, or maladjusted
- Spark plug incorrect
- IC igniter in ECU trouble

Muffler overheating:
- For KLEEN, do not run the engine even if with only one cylinder misfiring or poor running (Request the nearest service facility to correct it)
- For KLEEN, do not push-start with a dead battery (Connect another full-charged battery with jumper cables, and start the engine using the electric starter)
- For KLEEN, do not start the engine under misfire due to spark plug fouling or poor connection of the stick coil
- For KLEEN, do not coast the motorcycle with the ignition switch off (Turn the ignition switch ON and run the engine)
- IC igniter in ECU trouble

Fuel/air mixture incorrect:
- Throttle body assy holder loose
- Air cleaner duct loose
- Air cleaner poorly sealed, or missing
- Air cleaner O-ring damaged
- Air cleaner clogged

Compression high:
- Carbon built up in combustion chamber

Engine load faulty:
- Clutch slipping
- Engine oil level too high

Troubleshooting Guide

Engine oil viscosity too high
Drive train trouble
Brake dragging

Lubrication inadequate:
Engine oil level too low
Engine oil poor quality or incorrect

Gauge incorrect:
Water temperature gauge broken
Water temperature sensor broken

Coolant incorrect:
Coolant level too low
Coolant deteriorated
Wrong coolant mixed ratio

Cooling system component incorrect:
Radiator fin damaged
Radiator clogged
Thermostat trouble
Radiator cap trouble
Radiator fan relay trouble
Fan motor broken
Fan blade damaged
Water pump not turning
Water pump impeller damaged

Over Cooling:

Gauge incorrect:
Water temperature gauge broken
Water temperature sensor broken

Cooling system component incorrect:
Radiator fan relay trouble
Thermostat trouble

Clutch Operation Faulty:

Clutch slipping:
Friction plate worn or warped
Steel plate worn or warped
Clutch spring broken or weak
Clutch hub or housing unevenly worn
No clutch lever play
Clutch inner cable trouble
Clutch release mechanism trouble

Clutch not disengaging properly:
Clutch plate warped or too rough
Clutch spring compression uneven
Engine oil deteriorated
Engine oil viscosity too high
Engine oil level too high
Clutch housing frozen on drive shaft
Clutch hub nut loose
Clutch hub spline damaged
Clutch friction plate installed wrong
Clutch lever play excessive
Clutch release mechanism trouble

Gear Shifting Faulty:

Doesn't go into gear; shift pedal doesn't return:
Clutch not disengaging
Shift fork bent or seized
Gear stuck on the shaft
Gear positioning lever binding
Shift return spring weak or broken
Shift return spring pin loose
Shift mechanism arm spring broken
Shift mechanism arm broken
Shift pawl broken

Jumps out of gear:
Shift fork ear worn, bent
Gear groove worn
Gear dogs and/or dog holes worn
Shift drum groove worn
Gear positioning lever spring weak or broken
Shift fork guide pin worn
Drive shaft, output shaft, and/or gear splines worn

Overshifts:
Gear positioning lever spring weak or broken
Shift mechanism arm spring broken

Abnormal Engine Noise:

Knocking:
IC igniter in ECU trouble
Carbon built up in combustion chamber
Fuel poor quality or incorrect
Spark plug incorrect
Overheating

Piston slap:
Cylinder/piston clearance excessive
Cylinder, piston worn
Connecting rod bent
Piston pin, piston pin hole worn

Valve noise:
Valve clearance incorrect
Valve spring broken or weak
Camshaft bearing worn
Valve lifter worn

Other noise:
Connecting rod small end clearance excessive
Connecting rod big end clearance excessive
Piston ring/groove clearance excessive
Piston ring worn, broken, or stuck
Piston ring groove worn
Piston seizure, damage
Cylinder head gasket leaking
Exhaust pipe leaking at cylinder head connection
Crankshaft runout excessive

Engine mount loose
Crankshaft bearing worn
Primary gear worn or chipped
Camshaft chain tensioner trouble
Camshaft chain, sprocket, guide worn
Air suction valve damaged
Air switching valve damaged
Alternator rotor loose
Catalytic converter melt down due to muffler overheating (KLEEN)

Abnormal Drive Train Noise:

Clutch noise:
Clutch housing/friction plate clearance excessive
Clutch housing gear worn
Wrong installation of outside friction plate

Transmission noise:
Bearings worn
Transmission gear worn or chipped
Metal chips jammed in gear teeth
Engine oil insufficient

Drive line noise:
Drive chain adjusted improperly
Drive chain worn
Rear and/or engine sprocket worn
Chain lubrication insufficient
Rear wheel misaligned

Abnormal Frame Noise:

Front fork noise:
Oil insufficient or too thin
Spring weak or broken

Rear shock absorber noise:
Shock absorber damaged

Disc brake noise:
Pad installed incorrectly
Pad surface glazed
Disc warped
Caliper trouble

Other noise:
Bracket, nut, bolt, etc. not properly mounted or tightened

Oil Pressure Warning Light Goes On:

Engine oil pump damaged
Engine oil screen clogged
Engine oil filter clogged
Engine oil level too low
Engine oil viscosity too low
Camshaft bearing worn
Crankshaft bearing worn
Oil pressure switch damaged
Wiring faulty
Relief valve stuck open
O-ring at the oil passage in the crankcase damaged

Exhaust Smokes Excessively:

White smoke:
Piston oil ring worn
Cylinder worn
Valve oil seal damaged
Valve guide worn
Engine oil level too high

Black smoke:
Air cleaner clogged

Brown smoke:
Air cleaner duct loose
Air cleaner O-ring damaged
Air cleaner poorly sealed or missing

Handling and/or Stability Unsatisfactory:

Handlebar hard to turn:
Cable routing incorrect
Hose routing incorrect
Wiring routing incorrect
Steering stem nut too tight
Steering stem bearing damaged
Steering stem bearing lubrication inadequate
Steering stem bent
Tire air pressure too low

Handlebar shakes or excessively vibrates:
Tire worn
Swingarm pivot bearing worn
Rim warped, or not balanced
Wheel bearing worn
Handlebar holder bolt loose
Steering stem nut loose
Front, rear axle runout excessive
Engine mounting bolt loose

Handlebar pulls to one side:
Frame bent
Wheel misalignment
Swingarm bent or twisted
Swingarm pivot shaft runout excessive
Steering maladjusted
Front fork bent
Right and left front fork oil level uneven

Shock absorption unsatisfactory:
(Too hard)
Front fork oil excessive
Front fork oil viscosity too high
Rear shock absorber adjustment too hard
Tire air pressure too high
Front fork bent
(Too soft)
Tire air pressure too low
Front fork oil insufficient and/or leaking
Front fork oil viscosity too low

Rear shock adjustment too soft
Front fork, rear shock absorber spring weak
Rear shock absorber oil leaking

Brake Doesn't Hold:

Air in the brake line
Pad or disc worn
Brake fluid leakage
Disc warped
Contaminated pad
Brake fluid deteriorated
Primary or secondary cup damaged in master cylinder
Master cylinder scratched inside

Battery Trouble:

Battery discharged:
Charge insufficient
Battery faulty (too low terminal voltage)
Battery cable making poor contact
Load excessive (e.g., bulb of excessive wattage)
Ignition switch trouble
Alternator trouble
Wiring faulty
Regulator/rectifier trouble

Battery overcharged:
Alternator trouble
Regulator/rectifier trouble
Battery faulty

MODEL APPLICATION

Year	Model	Beginning Frame No.
2012	EX650EC	JKAEXEE1□CDA00001 JKAEX650EEDA00001
2012	EX650FC	JKAEXEF1□CDA00001 JKAEX650EFDA00001

□:This digit in the frame number changes from one machine to another.

Kawasaki
KAWASAKI HEAVY INDUSTRIES, LTD.
Motorcycle & Engine Company
Part No.99924-1454-01
Printed in Japan